GENERAL INFORMATION SECTION

FOREWORD	FW
HOW TO USE THIS MANUALS	HU
SPECIFICATIONS	SPC
PRECAUTION	PC
NOTE	NT
IDENTIFICATION	ID
RECOMMENDED MATERIALS	RM
PRE-DELIVERY INSPECTION	PI
PERIODIC MAINTENANCE SERVICES	PM

This service manual has been prepared to provide SUBARU service personnel with the necessary information and data for the correct maintenance and repair of SUBARU vehicles.
This manual includes the procedures for maintenance, disassembling, reassembling, inspection and adjustment of components and diagnostics for guidance of experienced mechanics.
Please peruse and utilize this manual fully to ensure complete repair work for satisfying our customers by keeping their vehicle in optimum condition. When replacement of parts during repair work is needed, be sure to use SUBARU genuine parts.

All information, illustration and specifications contained in this manual are based on the latest product information available at the time of publication approval.

FUJI HEAVY INDUSTRIES LTD.

G2460BE1

FOREWORD

FW

Page

1. Foreword 2

1. Foreword

A: FOREWORD

These manuals are used when performing maintenance, repair or diagnosis of Subaru LEGACY.

Applicable model:
2010MY BM*****, BR*****

The manuals contain the latest information at the time of publication. Changes in the specifications, methods, etc. may be made without notice.

HOW TO USE THIS MANUALS

HU

Page

1. How to Use This Manuals 2

1. How to Use This Manuals

A: HOW TO USE THIS MANUALS

1. STRUCTURE

Each section consists of SCT that are broken down into SC that are divided into sections for each component. The specification, maintenance and other information for the components are included, and the diagnostic information has also been added where necessary.

2. CONTENTS

The first page has an index with tabs.

3. COMPONENT

Illustrations are provided for each component. The information necessary for repair work (tightening torque, grease up points, etc.) is described on these illustrations. Information is described using symbol.
To order parts, refer to parts catalogue.

Example:

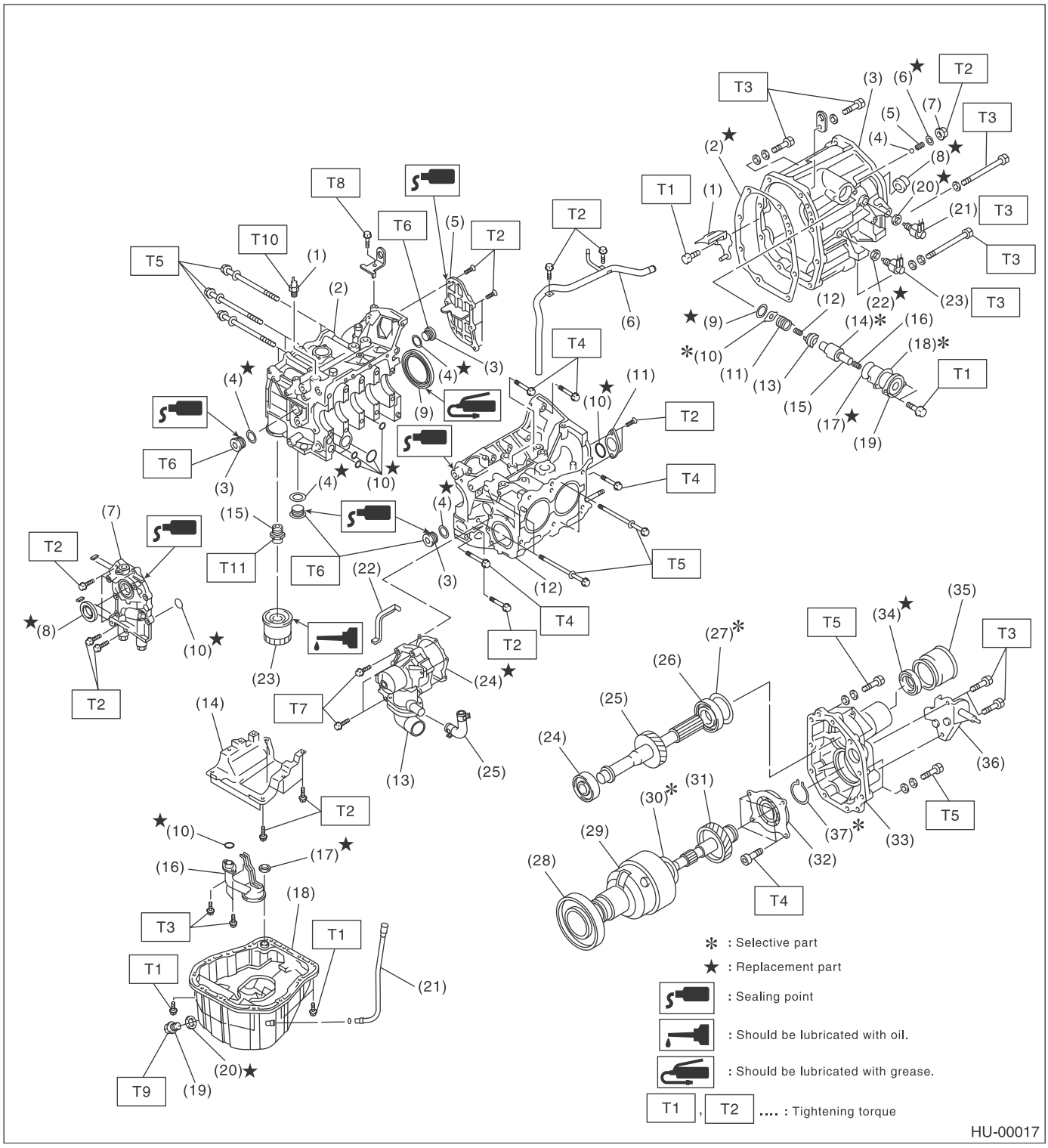

4. DEFINITION OF “NOTE”, “CAUTION” AND “WARNING”

- NOTE:

describes supplementary explanations for efficient operation.

- CAUTION:

describes particular items to be followed and items to be prohibited to avoid vehicle or parts damage.

- WARNING:

describes items to be strictly prohibited to avoid serious injury to the person doing the work or people in the area, and items to be strictly followed to avoid any deficiency or accident.

5. SPECIFICATION

If necessary, specifications are also included.

6. INSPECTION

Inspections to be carried out before and after maintenance are included.

7. MAINTENANCE

• Maintenance instructions for serviceable parts describe work area and detailed step with illustration. It also describes the use of special tool, tightening torque, caution for each procedure.
• If many serviceable parts are included in one service procedure, appropriate reference is provided for each parts.

Example:

15.Main Shaft ← (A)

A: REMOVAL ← (B)

1) Remove the manual transmission assembly from vehicle. <Ref. to MT-33, REMOVAL, Manual Transmission Assembly.> ← (C)

---

11) Tighten the lock nuts to the specified torque using ST1 and ST2.

NOTE: ← (D)
Secure the lock nuts in two places after tightening.

ST1 498937000 TRANSMISSION HOLDER
ST2 499987003 (E) SOCKET WRENCH (35) (F)

Tightening torque:
118 N·m (12.0 kgf-m, 86.8 ft-lb) ← (G)

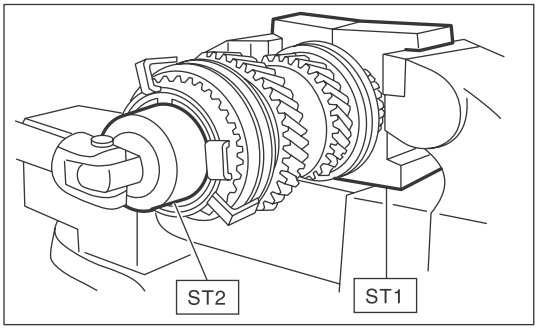

← (H)

HU-00020

(A) Component
(B) Process
(C) Reference
(D) Cautions
(E) Tool number of special tool
(F) Name of special tool
(G) Tightening torque
(H) Illustration

8. DIAGNOSIS

Diagnosis uses step-by-step process to make operations easier.

9. SI UNITS

Measurements in these manuals are according to the SI units. Metric and yard/pound measurements are also included.

Example:

Tightening torque:
44 N·m (4.5 kgf-m, 33 ft-lb)

LIST OF SI UNIT

Item	SI units	Conventional unit	Remarks
Force	N (Newton)	kgf	1 kgf = 9.80655 N
Mass (Weight)	kg, g	kg, g	
Capacity	ℓ, mℓ or cm^3	ℓ or cc	1 cc = 1 cm^3 = 1 mℓ
Torque	N·m	kgf-m, kgf-cm	1 kgf-m = 9.80655 N·m
Rotating speed	rpm	rpm	
Pressure	kPa (kilopascal)	kgf/cm^2	1 kgf/cm^2 = 98.0655 kPa
		mmHg	1 mmHg = 0.133322 kPa
Power	W	PS	1 PS = 0.735499 kW
Calorie	W·h	cal	1 kcal = 1.16279 W·h
Fuel consumption rate	g/kw·h	g/PS·h	1 g/PS·h = 1.3596 g/kW·h

The figure used in these manuals are described in the SI units and conventional units are described in ( ).

10.EXPLANATION OF TERMINOLOGY

• LIST OF ABBREVIATIONS

AAI	: Air Assist Injection	IG	: Ignition
A/B	: Airbag	IN	: Intake
ABS	: Anti-lock Brake System	INT	: Intermittent
A/C	: Air Conditioner	I/O	: Input / Output
A/F	: Air Fuel Ratio	ISC	: Idle Speed Control
ALT	: Generator	LAN	: Local Area Network
APS	: Accessory Power supply Socket	LH	: LH (Left Hand)
ASSY	: Assembly	LSD	: Limited Slip Differential
AT	: Automatic Transmission	M/B	: Main Fuse & Relay Box
ATF	: Automatic Transmission Fluid	MD	: Mini Disc
AVCS	: Active Valve Control System	MID	: Multi Information Display
AWD	: All Wheel Drive	MFI	: Multi-Point Fuel Injection
BATT	: Battery	MP-T	: Multi-Plate Transfer
BCM	: Brake Control Module	MT	: Manual Transmission
BJ	: Bell Joint	NA	: Natural Aspiration
CAN	: Communication Area Network	NC	: Normal Close (Relay)
CD	: Compact Disc	NO	: Normal Open (Relay)
COMPL	: Complete	OP	: Option Parts
CPU	: Central Processing Unit	PC	: Personal Computer
DOHC	: Double Overhead Camshaft	PCV	: Positive Crankcase Ventilation
DOJ	: Double Offset Joint	P/S	: Power Steering
DTC	: Diagnostic Trouble Code	PTJ	: Pillow Tripod Joint
EBJ	: High-efficiency Compact Ball Fixed Joint	P/W	: Power Window
ECM	: Engine Control Module	RH	: RH (Right Hand)
EDJ	: High-efficiency Compact Double Offset Joint	Rr	: Rear
EGI	: Electronic Gasoline Injection	SDI	: SUBARU Diagnostic Interface
E/G	: Engine	SI	: SUBARU Intelligent
EGR	: Exhaust Gas Recirculation	SOHC	: Single Overhead Camshaft
ETC	: Electronic Throttle Control	SRS	: Supplemental Restraint System
EX	: Exhaust	ST	: Special Tool
F/B	: Fuse & Joint Box	SW	: Switch
Ft	: Front	TCS	: Traction Control System
FWD	: Front Wheel Drive	TGV	: Tumble Generator Valve
GPS	: Global Positioning System	T/M	: Transmission
HID	: High-Intensity Discharge	UJ	: Universal joint
H/U	: Hydraulic Unit	VDC	: Vehicle Dynamics Control
HVAC	: Heater, Ventilator and Air Conditioner	VTD	: Variable Torque Distribution

SPECIFICATIONS

SPC

Page
1. LEGACY 2
2. OUTBACK 6

1. LEGACY

A: DIMENSION

1. SEDAN MODEL

Model			2.5 L SOHC non-turbo	2.5 L DOHC turbo	3.6 L DOHC non-turbo
Overall length		mm (in)	4,735 (186.4)		
Overall width		mm (in)	1,820 (71.7)		
Overall height (at C.W.)		mm (in)	1,505 (59.3)		
Wheelbase		mm (in)	2,750 (108.3)		
Tread	Front	mm (in)	1,565 (61.6)	1,550 (61.0)	1,565 (61.6)
	Rear	mm (in)	1,570 (61.8)	1,555 (61.2)	1,570 (61.8)
Minimum road clearance		mm (in)	150 (5.9)		

B: ENGINE

Model	2.5 L SOHC non-turbo	2.5 L DOHC turbo	3.6 L DOHC non-turbo
Engine type	Horizontally opposed, liquid cooled, 4-cylinder, 4-stroke gasoline engine		Horizontally opposed, liquid cooled, 6-cylinder, 4-stroke gasoline engine
Valve arrangement	Overhead camshaft		
Bore × stroke mm (in)	99.5 × 79.0 (3.917 × 3.110)		92.0 × 91.0 (3.622 × 3.583)
Displacement cm^3 (cu in)	2,457 (149.9)		3,630 (221.4)
Compression ratio	10.0	8.4	10.5
Ignition order	1 — 3 — 2 — 4		1 — 6 — 3 — 2 — 5 — 4
Idle speed at Park or Neutral position rpm	650 (MT) 675 (CVT)	700	700
Maximum output kW (HP)/rpm	127 (170)/5,600	198 (265)/5,600	191 (256)/6,000
Maximum torque N·m (kgf-m, ft-lb)/rpm	230 (23.5, 170)/4,000	350 (35.7, 258)/2,000 — 5,200	334 (34.1, 247)/4,400

C: ELECTRICAL

Model		2.5 L SOHC non-turbo	2.5 L DOHC turbo	3.6 L DOHC non-turbo
Ignition timing (at idling) BTDC		15°		
Spark plug	Type and manufacturer	NGK: SIFR6A11	NGK: SILFR6B8	NGK: SILFR6C11
Generator		12 V — 110 A		12 V — 130 A
Battery	Type and capacity (5HR)	12 V — 52 AH (75D23R)		
	CCA	490 A		

D: TRANSMISSION

1. MT

Model			2.5 L SOHC non-turbo	2.5 L DOHC turbo
Transmission type			6MT	6MT
Clutch type			DSPD	DSPD
Gear ratio		1st	3.454	3.454
		2nd	1.947	1.947
		3rd	1.296	1.296
		4th	0.972	0.972
		5th	0.825	0.780
		6th	0.695	0.666
		Rev.	3.636	3.636
Reduction gear (Front)		Type of gear	Hypoid	Hypoid
		Gear ratio	4.111	4.111
Reduction gear (Rear)	Transfer reduction	Type of gear	Helical	Helical
		Gear ratio	1.000	1.000
	Final reduction	Type of gear	Hypoid	Hypoid
		Gear ratio	4.111	4.111

6MT: 6-forward and 1-reverse speeds with synchromesh for all gears
DSPD: Dry Single Plate Diaphragm

2. AT

Model			3.6 L DOHC non-turbo
Transmission type			5AT
Clutch type			TCC
Gear ratio		1st	3.540
		2nd	2.264
		3rd	1.471
		4th	1.000
		5th	0.834
		Rev.	2.370
Reduction gear (Front)	1st reduction	Type of gear	Helical
		Gear ratio	1.000
	Final reduction	Type of gear	Hypoid
		Gear ratio	3.083
Reduction gear (Rear)		Type of gear	Hypoid
		Gear ratio	3.083

5AT: Electronically controlled fully-automatic, 5-forward speeds and 1-reverse
TCC: Torque Converter Clutch

3. CVT

Model			2.5 L SOHC non-turbo
Transmission type			CVT
Clutch type			TCC
Change gear ratio		Forward	3.525 — 0.558
		Rev.	2.358
Reduction gear (Front)	1st reduction	Type of gear	Helical
		Gear ratio	1.000
	Final reduction	Type of gear	Hypoid
		Gear ratio	3.700
Transfer reduction ratio			1.000
Reduction gear (Rear)		Type of gear	Hypoid
		Gear ratio	3.700

TCC: Torque Converter Clutch
CVT: Forward continuously variable speed change and 1-reverse

E: STEERING

Type		Rack & pinion
Turns, lock to lock		2.8
Minimum turning diameter m (ft)	Curb to curb	11.2 (36.7)
	Wall to wall	11.8 (38.7)

F: SUSPENSION

Front	Macpherson strut type suspension
REAR	Double wishbone type suspension

G: BRAKE

Model	2.5 L SOHC non-turbo	2.5 L DOHC turbo	3.6 L DOHC non-turbo
Service brake system	Dual circuit hydraulic with vacuum suspended power unit		
Front	Ventilated disc brake		
REAR	Disc brake	Ventilated disc brake	
Parking brake	Electric mechanical on rear brakes		
Brake assist	Standard equipment for all vehicles		

H: TIRE

Model	2.5L SOHC non-turbo	2.5L DOHC turbo	3.6L DOHC non-turbo
Wheel size	16 × 6 1/2JJ 16 × 6 1/2J 17 × 7 1/2J	18 × 7 1/2J	17 × 7 1/2J
Tire size	P205/60 R16 91V P215/50 R17 90V	225/45 R18 91W	P225/50 R17 93V
Type	Tubeless, Steel belted radial		

I: CAPACITY

Model			2.5L SOHC non-turbo		2.5L DOHC turbo	3.6L DOHC non-turbo
			6MT	CVT	6MT	5AT
Fuel tank		ℓ (US gal, Imp gal)	70 (18.5, 15.4)			
Engine oil	Total capacity (at overhaul)	ℓ (US qt, Imp qt)	4.8 (5.1, 4.2)	4.8 (5.1, 4.2)	5.2 (5.5, 4.6)	7.8 (8.2, 6.9)
	Filling amount of engine oil ℓ (US qt, Imp qt)	When replacing engine oil and oil filter	4.2 (4.4, 3.7)	4.2 (4.4, 3.7)	4.3 (4.5, 3.8)	6.5 (6.9, 5.7)
		When replacing engine oil only	4.0 (4.2, 3.5)			6.3 (6.7, 5.5)
Transmission gear oil		ℓ (US qt, Imp qt)	3.7 (3.9, 3.3)	—	3.7 (3.9, 3.3)	—
ATF or CVTF		ℓ (US qt, Imp qt)	—	12.0 — 12.5 (12.7 — 13.2, 10.6 — 11.0)	—	9.8 (10.4, 8.6)
Front differential gear oil		ℓ (US qt, Imp qt)	—	1.4 (1.5, 1.2)	—	1.4 (1.5, 1.2)
Rear differential gear oil		ℓ (US qt, Imp qt)	0.8 (0.8, 0.7)			
Power steering fluid		ℓ (US qt, Imp qt)	0.7 (0.7, 0.6)			
Engine coolant		ℓ (US qt, Imp qt)	6.5 (6.9, 5.7)	6.4 (6.8, 5.6)	6.5 (6.9, 5.7)	6.5 (6.9, 5.7)

2. OUTBACK

A: DIMENSION

1. OUTBACK MODEL

Model			2.5L SOHC non-turbo	3.6L DOHC non-turbo
Overall length		mm (in)	4,780 (188.2)	
Overall width		mm (in)	1,820 (71.7)	
Overall height (at C.W.)		mm (in)	1,680 (66.1), 1,670 (65.7)*1	
Wheelbase		mm (in)	2,740 (107.9)	
Tread	Front	mm (in)	1,550 (61.0)	
	REAR	mm (in)	1,550 (61.0)	
Minimum road clearance		mm (in)	220 (8.7)	

*1: when crossbar is stored

B: ENGINE

Model	2.5L SOHC non-turbo	3.6L DOHC non-turbo
Engine type	Horizontally opposed, liquid cooled, 4-cylinder, 4-stroke gasoline engine	Horizontally opposed, liquid cooled, 6-cylinder, 4-stroke gasoline engine
Valve arrangement	Overhead camshaft	
Bore × stroke mm (in)	99.5 × 79.0 (3.917 × 3.110)	92.0 × 91.0 (3.622 × 3.583)
Displacement cm^3 (cu in)	2,457 (149.9)	3,630 (221.4)
Compression ratio	10.0	10.5
Ignition order	1 — 3 — 2 — 4	1 — 6 — 3 — 2 — 5 — 4
Idle speed at Park or Neutral position rpm	650 (MT) 675 (CVT)	700
Maximum output kW (HP)/rpm	127 (170)/5,600	191 (256)/6,000
Maximum torque N·m (kgf-m, ft-lb)/rpm	230 (23.5, 170)/4,000	334 (34.1, 247)/4,400

C: ELECTRICAL

Model		2.5L SOHC non-turbo	3.6L DOHC non-turbo
Ignition timing (at idling) BTDC		15°	
Spark plug	Type and manufacturer	NGK: SIFR6A11	NGK: SILFR6C11
Generator		12 V — 110 A	12 V — 130 A
Battery	Type and capacity (5HR)	12 V — 52 AH (75D23R)	
	CCA	490 A	

D: TRANSMISSION

1. MT

Model			2.5L SOHC non-turbo
Transmission type			6MT
Clutch type			DSPD
Gear ratio		1st	3.454
		2nd	1.947
		3rd	1.296
		4th	0.972
		5th	0.825
		6th	0.695
		Rev.	3.636
Reduction gear (Front)		Type of gear	Hypoid
		Gear ratio	4.444
Reduction gear (Rear)	Transfer reduction	Type of gear	Helical
		Gear ratio	1.000
	Final reduction	Type of gear	Hypoid
		Gear ratio	4.444

6MT: 6-forward and 1-reverse speeds with synchromesh for all gears
DSPD: Dry Single Plate Diaphragm

2. AT

Model			3.6L DOHC non-turbo
Transmission type			5AT
Clutch type			TCC
Gear ratio		1st	3.540
		2nd	2.264
		3rd	1.471
		4th	1.000
		5th	0.834
		Rev.	2.370
Reduction gear (Front)	1st reduction	Type of gear	Helical
		Gear ratio	1.000
	Final reduction	Type of gear	Hypoid
		Gear ratio	3.083
Reduction gear (Rear)		Type of gear	Hypoid
		Gear ratio	3.083

5AT: Electronically controlled fully-automatic, 5-forward speeds and 1-reverse
TCC: Torque Converter Clutch

3. CVT

Model			2.5L SOHC non-turbo
Transmission type			CVT
Clutch type			TCC
Change gear ratio		Forward	3.525 — 0.558
		Rev.	2.358
Reduction gear (Front)	1st reduction	Type of gear	Helical
		Gear ratio	1.000
	Final reduction	Type of gear	Hypoid
		Gear ratio	3.900
Transfer reduction ratio			1.000
Reduction gear (Rear)		Type of gear	Hypoid
		Gear ratio	3.900

TCC: Torque Converter Clutch
CVT: Forward continuously variable speed change and 1-reverse

E: STEERING

Model		2.5L SOHC	3.6L DOHC
Type		Rack & pinion	
Turns, lock to lock		3.2	
Minimum turning diameter m (ft)	Curb to curb	11.0 (36.1)	
	Wall to wall	11.8 (38.7)	

F: SUSPENSION

Front	Macpherson strut type suspension
REAR	Double wishbone type suspension

G: BRAKE

Model	2.5L SOHC non-turbo	3.6L DOHC non-turbo
Service brake system	Dual circuit hydraulic with vacuum suspended power unit	
Front	Ventilated disc brake	
REAR	Disc brake	Ventilated disc brake
Parking brake	Electric mechanical on rear brakes	
Brake assist	Standard equipment for all vehicles	

H: TIRE

Model	2.5L SOHC non-turbo	3.6L DOHC non-turbo
Wheel size	16 × 6 1/2JJ 17 × 7J	17 × 7J
Tire size	P215/70 R16 99S P225/60 R17 98T	P225/60 R17 98T
Type	Tubeless, Steel belted radial	

I: CAPACITY

Model			2.5L SOHC non-turbo		3.6L DOHC non-turbo
			6MT	CVT	5AT
Fuel tank		ℓ (US gal, Imp gal)	70 (18.5, 15.4)		
Engine oil	Total capacity (at overhaul)	ℓ (US qt, Imp qt)	4.8 (5.1, 4.2)	4.8 (5.1, 4.2)	7.8 (8.2, 6.9)
	Filling amount of engine oil ℓ (US qt, Imp qt)	When replacing engine oil and oil filter	4.2 (4.4, 3.7)	4.2 (4.4, 3.7)	6.5 (6.9, 5.7)
		When replacing engine oil only	4.0 (4.2, 3.5)		6.3 (6.7, 5.5)
Transmission gear oil		ℓ (US qt, Imp qt)	3.7 (3.9, 3.3)	—	
ATF or CVTF		ℓ (US qt, Imp qt)	—	12.0 — 12.5 (12.7 — 13.2, 10.6 — 11.0)	9.8 (10.4, 8.6)
Front differential gear oil		ℓ (US qt, Imp qt)	—	1.4 (1.5, 1.2)	
Rear differential gear oil		ℓ (US qt, Imp qt)	0.8 (0.8, 0.7)		
Power steering fluid		ℓ (US qt, Imp qt)	0.7 (0.7, 0.6)		
Engine coolant		ℓ (US qt, Imp qt)	6.5 (6.9, 5.7)	6.4 (6.8, 5.6)	6.5 (6.9, 5.7)

PRECAUTION

PC

Page
1. Precaution 2

1. Precaution

A: CAUTION

Please clearly understand and adhere to the following general precautions. They must be strictly followed to avoid minor or serious injury to the person doing the work or people in the area.

1. VEHICLE DYNAMICS CONTROL (VDC)

Handle the VDC as a total system. Do not disassemble or attempt to repair individual parts. Doing so could prevent the VDC system from operating when needed, or the system may operate incorrectly and result in injury.

2. ELECTRONIC PARKING BRAKE

Handle the electronic parking brake as a total system. Do not disassemble or attempt to repair individual parts. Doing so could prevent the electronic parking brake system from operating when needed, or the system may operate incorrectly and result in injury.

3. BRAKE FLUID

If brake fluid gets in your eyes or on your skin, do the following:

- Wash eyes and seek immediate medical attention.
- Wash your skin with soap and then rinse thoroughly with water.

4. RADIATOR FAN

The radiator fan may rotate without warning, even when the engine is not ON. Do not place your hand, cloth, tools or other items near the fan at any time.

5. ROAD TEST

Always conduct road tests in accordance with traffic rules and regulations to avoid bodily injury and interrupting traffic.

6. AIRBAG

To prevent bodily injury from unexpected deployment of airbags and unnecessary maintenance, follow the instructions in this manual when performing maintenance on the airbag components and nearby, or around the vehicle front (radiator panel, front wheel apron, front side frame, front bumper, front hood panel, front fender panel), around side of the vehicle (front door panel, rear door panel, center pillar, rear fender panel, side sill, rear wheel apron) and the airbag wiring harnesses or nearby.
To prevent unexpected deployment, turn the ignition switch to OFF and disconnect the ground cable from battery, then wait at least 60 seconds to discharge backup power supply before starting work.

7. AIRBAG AND SEAT BELT PRETENSIONER DISPOSAL

To prevent bodily injury from unexpected airbag deployment, do not dispose the airbag modules or seat belt pretensioner in the same way as other waste. Follow the special instructions for disposal in this manual. Follow all government regulations concerning disposal of refuse.

8. AIRBAG MODULE

Adhere to the following when handing and storing the airbag module to prevent bodily injury from unexpected deployment:

- Do not hold the harnesses or connectors to carry the module.
- Do not face the bag in the direction that it opens towards yourself or other people.
- Do not face the bag in the direction that it opens towards the floor or walls.

9. AIRBAG SPECIAL TOOL

To prevent unexpected deployment, only use special tools.

10.WINDOW

Always wear safety glasses when working around any glass to prevent glass fragments from damaging your eyes.

11.WINDOW ADHESIVE

Always use the recommended or equivalent adhesive when attaching glass to prevent it from coming falling, resulting in accidents and injury.

12.OIL

When handling oil, carefully observe the following to prevent unexpected accidents.

- Prepare a container and cloth to prevent scattering of oil when performing work where fuels can be spilled. If the fuel spills, wipe it off immediately to prevent from penetrating into floor or flowing out for environmental protection.
- Follow all government regulations concerning disposal of refuse when disposing.

13.FUEL

When handling and storing fuel, carefully observe the following to prevent unexpected accidents.

- Be careful of fires.
- Prepare a container and cloth to prevent scattering of fuels when performing work where fuels can be spilled. If the fuel spills, wipe it off immediately to prevent it from penetrating the floor or flowing out, to protect the environment.
- Follow all government and local regulations concerning disposal of refuse when disposing.

14.ENGINE COOLANT

When handling engine coolant, adhere to the following to prevent from unexpected accident.

• Never remove the radiator cap since engine coolant may blow out when it is hot.

• Prepare a container and cloth to prevent scattering of engine coolant when performing work where engine coolant can be spilled. If the oil spills, wipe it off immediately to prevent from penetrating into floor or flowing out for environmental protection.

• Follow all government and local regulations concerning disposal of refuse when disposing.

15.AIR CONDITIONER REFRIGERANT

In order to prevent from global warming, avoid releasing air conditioner refrigerant into the atmosphere. Using a refrigerant recovery system, discharge and reuse it.

16.REMOVAL AND INSTALLATION OPERATION OF HOSES, ETC.

1. Before the removal and installation operation of hoses, etc.

• If you keep using the damaged or deformed hose, it results bleeds or leakage of the fat adheres or disconnection of the hose. Be careful not to spill fat adheres on exhaust pipes, etc. during maintenance to prevent emitting smoke or causing fires.

• Perform the operation with the hose removed. If the operation is performed without removing the hose, it may damage inner surface of the hose.

2. Removal and installation operation of hoses, etc. during the inspection

• Follow the instructions below when removing hose.

• Do not use a pointed hose remover (hose plucker) when using a general hose remover. It may damage the pipe surface or the hose.

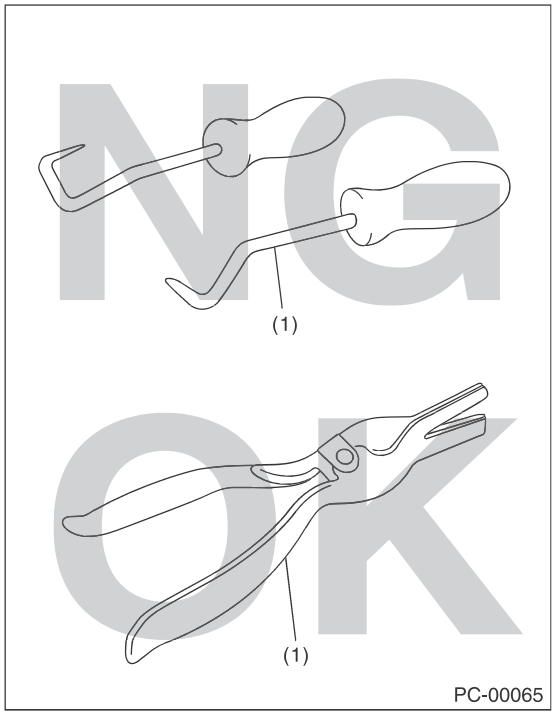

(1) Hose remover

• When draining hose using pliers, be sure to cover the hose with cloth and rotate the hose slightly to extract straight.

• If you keep using the hose, perform the inspection below and replace the hose with a new part if faulty.

• Replace the hose with a new part if it rides over the stay or spool.

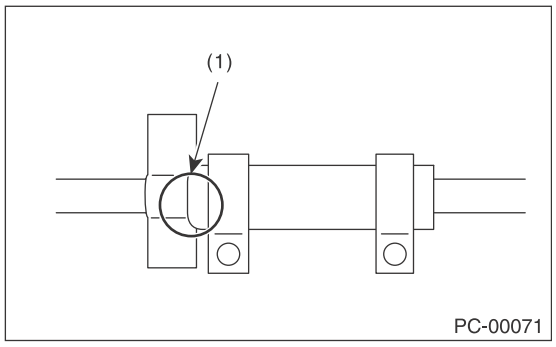

(1) Hose rides over the stay

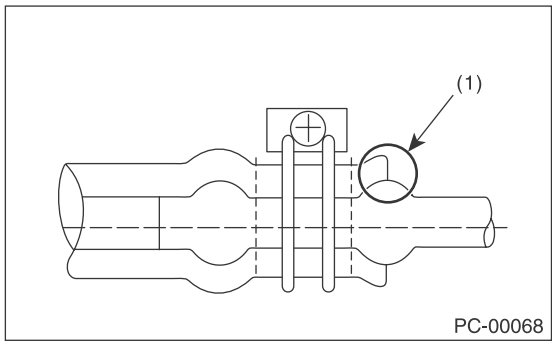

(1) Hose rides over the spool

• Check if the surface and the inner surface of the hose are damaged, cracked, bend, hardened, softened, swelled, peeled or deformed due to the adherence or the entry of the foreign matter by bending the hose. Replace with the new part if faulty.

• Follow the instructions below during installation.

• Check carefully for assembling position.
• Never use lubricants.
• Insert the hose to the specified position (stopper or spool) securely.

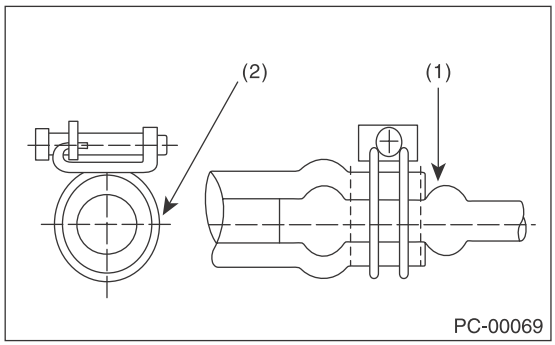

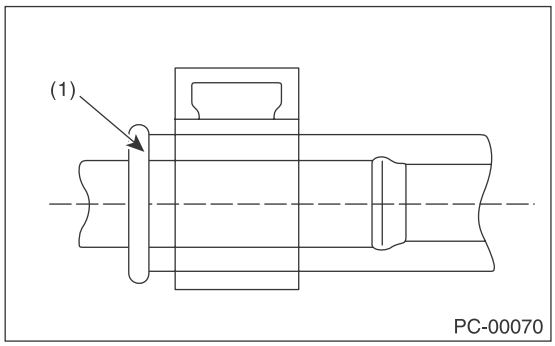

(1) Push against the spool. (Insert the hose and prevent it from becoming wrinkled.)
(2) Tighten the hose outwards and apply force thoroughly.

• Check if the position, direction and hose layout of the hose clamp are correct. (Check if the position, direction, length and the gap around are correct, or if it is different from the condition before the work)
• After the installation, check that the hose is installed securely and there is no leakage. (Check if it is fixed securely with the clamp)

• For hose clips and hose clamps, perform the inspection below and replace them with a new part if faulty.

• Check for deformation, rust, damage or foreign matters.
• For hose clip, check if it works and has clamping force.
• For hose clamp, check if it can tighten screw, not ovalized or the screw is not damaged.

• For hose pipes, perform the inspection below and replace with a new part if faulty.

Check if the pipe is not damaged, rusted, peeled (peeled plates included), covered with foreign matter, bent, compressed or cracked.

• For the parts below, replaces with a new part when the hose is removed or the installation position is changed.

ATF cooler hose, engine oil cooler hose, power steering suction hose, power steering return hose

NOTE

NT

Page
1. Note 2

1. Note

A: BASIC REPAIR HINT

This section describes basic points that the service operator must understand before performing the service operation.

1. APPEARANCE

- Always wear clean work clothing.
- Wear a cap and protective shoes.

2. PROTECTION OF VEHICLE UNDER MAINTENANCE AND PREPARATION OF TOOLS/ EQUIPMENT

- Before work, cover the vehicle body. (Ex. grille cover, fender cover, seat cover and floor mat cover)
- Before performing the service operation, prepare tools, equipment, container box, grease and cloth etc.

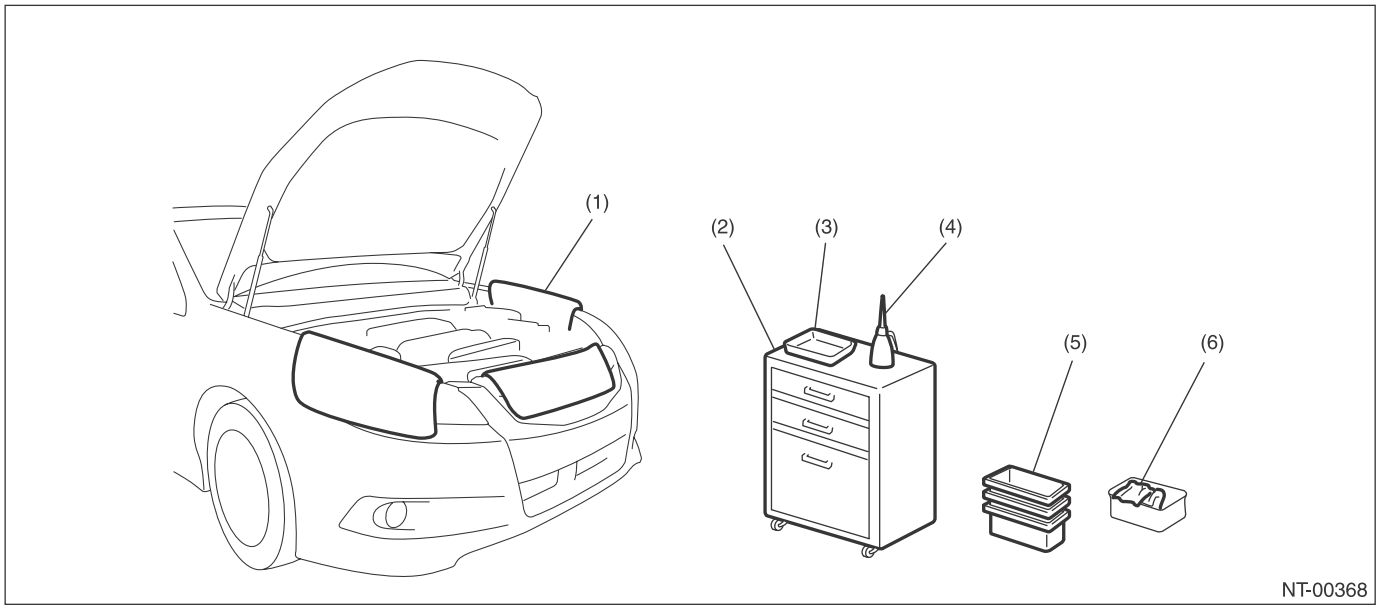

(1) Fender cover
(2) Tools/equipment case
(3) Tray
(4) Oil
(5) Container box
(6) Cloth

3. SAFETY

- Before work, set the wheel stoppers to secure the vehicle.
- When performing work by multiple workers, call to each other to make sure that service operation is performed safely.
- Before starting engine, ventilate the room.
- When performing the service operation of high-temperature parts like muffler, rotating parts like fan and other movable parts, be careful not to get burned or injured.
- For the jack-up and lift up, set the tool to the proper location to support the vehicle correctly. And use the safety device properly when lifting up.

4. SERVICE OPERATION

- By identifying the vehicle problems thoroughly before work, service operation will be performed effectively.
- Before removing parts, confirm the installation condition or the damage of the parts.
- To reinstall parts properly, leave a note of the condition before work as necessary.
- For a part which needs positioning, take appropriate action such as putting alignment marks.
- For a removed part, clean it as necessary and check for damage and defect before installation.

5. REMOVED PART

• A removed part must be organized to avoid mixing up with similar parts. When same parts are used in multiple locations, such as pistons in engine, manage the parts by using labels with cylinder No. so that the parts are not installed to the wrong location.
• Always replace nonreusable parts such as gasket and O-ring with new parts.
• After work, have a customer confirm the replaced part.

6. WHEN REMOVING BATTERY

When removing battery, power supply is cut off and the information stored in the computer memory is volatilized. Therefore, setting information of some device is initialized to the factory default. The device and functions initialized by removing battery are as follows.
• Clock
• Set temperature of fully automatic air conditioner
• Automatic full open/close of driver's window (power window needs to be initialized)
• User setting items in the navigation system
• Past trouble history (memory code)

B: NOTE

This is the information that can improve the efficiency of maintenance and assure the sound work.

1. FASTENERS NOTICE

Tighten the bolts and nuts to the specified torque. Do not apply paint, lubricant, rust retardant or other substance to the surface around bolts, nuts, etc. It may cause troubles with tightening to the specified torque and result in looseness and other problems of bolts and nuts.

2. STATIC ELECTRICITY DAMAGE

Touch grounded metal or equivalent for the elimination of static electricity before conducting work.

3. BATTERY

When removing the battery terminal, always be sure to turn the ignition switch to OFF and remove the battery ground cable first.

4. BACKUP/POWER SUPPLY FUSE

Right after the vehicle has arrived, 10 A backup fuse is removed to avoid run-down of the battery. Connect the backup fuse as shown in the figure. Also, delivery mode is canceled by disconnecting the backup fuse from the fuse holder.

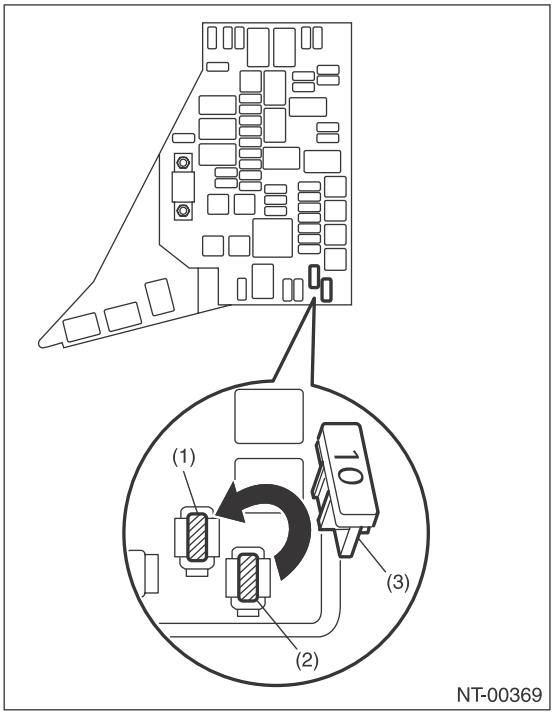

(1) Backup fuse insertion slot
(2) Backup fuse holder
(3) Backup fuse

5. IMMOBILIZER RELATED PART

Do not replace parts which have immobilizer ID (ignition key, combination meter, body integrated unit and ECM) with the parts from other vehicle.

6. SERVICE PARTS

Use genuine parts for maximum performance and maintenance when conducting repairs. Subaru/FHI will not be responsible for poor performance resulting from the use of parts except for genuine parts.

7. PROTECTING VEHICLE UNDER MAINTENANCE

Make sure to attach the fender cover, seat covers, etc. before work.

8. ENSURING SECURITY DURING WORK

When working in a group of two or more, perform the work with calling each other to ensure mutual safety.

9. LIFT AND JACK

When using a lift or shop jack to raise a vehicle or using rigid rack to support a vehicle, always follow instructions concerning jack-up points and weight limits to prevent the vehicle from falling, which could result in injury. Be especially careful that the vehicle is balanced before raising it. Be sure to set the wheel stoppers when jacking-up only the front or rear side of the vehicle.

CAUTION:
Select the lift attachment so that the side sill does not contact the lift arm portion.

NOTE:
- When using a lift, follow its operation manual before work.
- If side sill cover touches the lift arm, use lift attachment.
- Do not work or leave unattended while the vehicle is supported with jack, support it with rigid racks.
- Be sure to use the rigid racks with rubber attached to cradle to support the vehicle.
- When using a plate lift, use a rubber attachment. Place the attachment to the specified position of the vehicle, by adjusting front/rear and left/right sides accordingly.

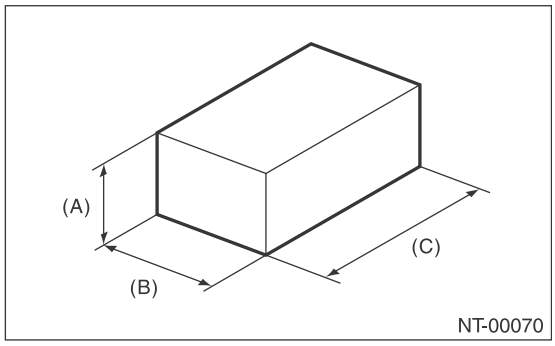

(A) 80 mm (3.1 in) or more
(B) 100 — 150 mm (3.94 — 5.91 in)
(C) 120 — 190 mm (4.72 — 7.48 in)

- Align the cushion rubber center of plate lift with the center of rubber attachment.
- Do not use the plate lift whose attachment does not reach the supporting locations.

• **SUPPORT LOCATIONS**

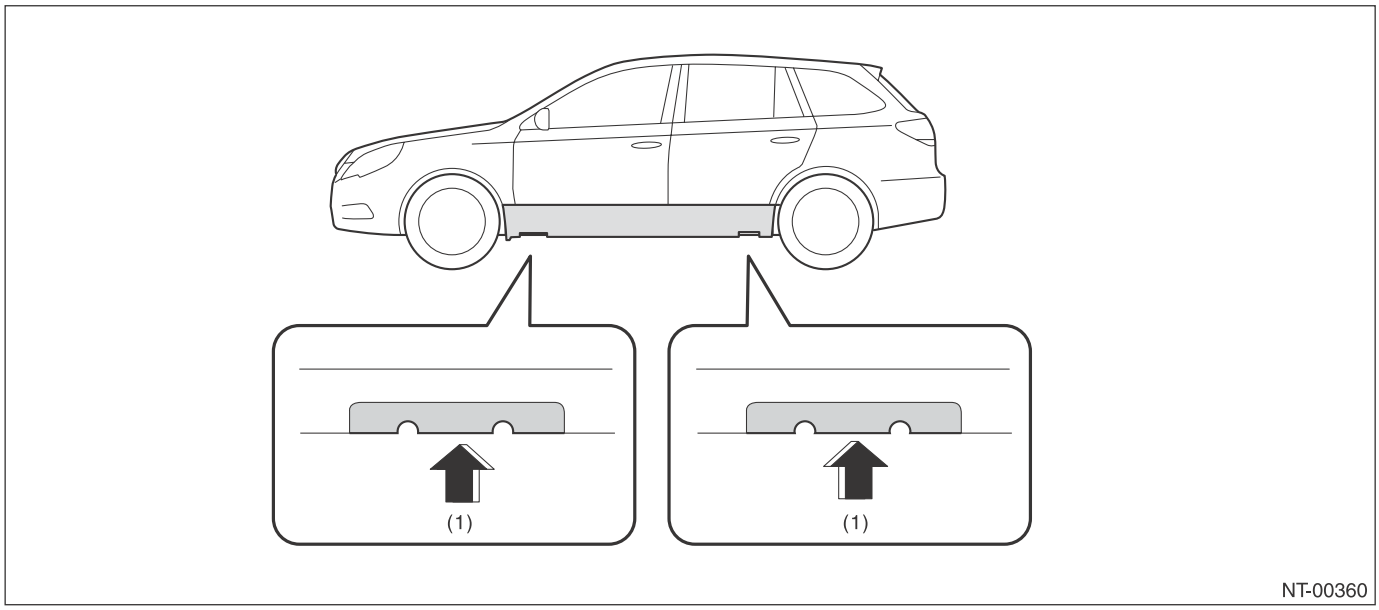

(1) Jack-up point

• **PANTOGRAPH JACK**

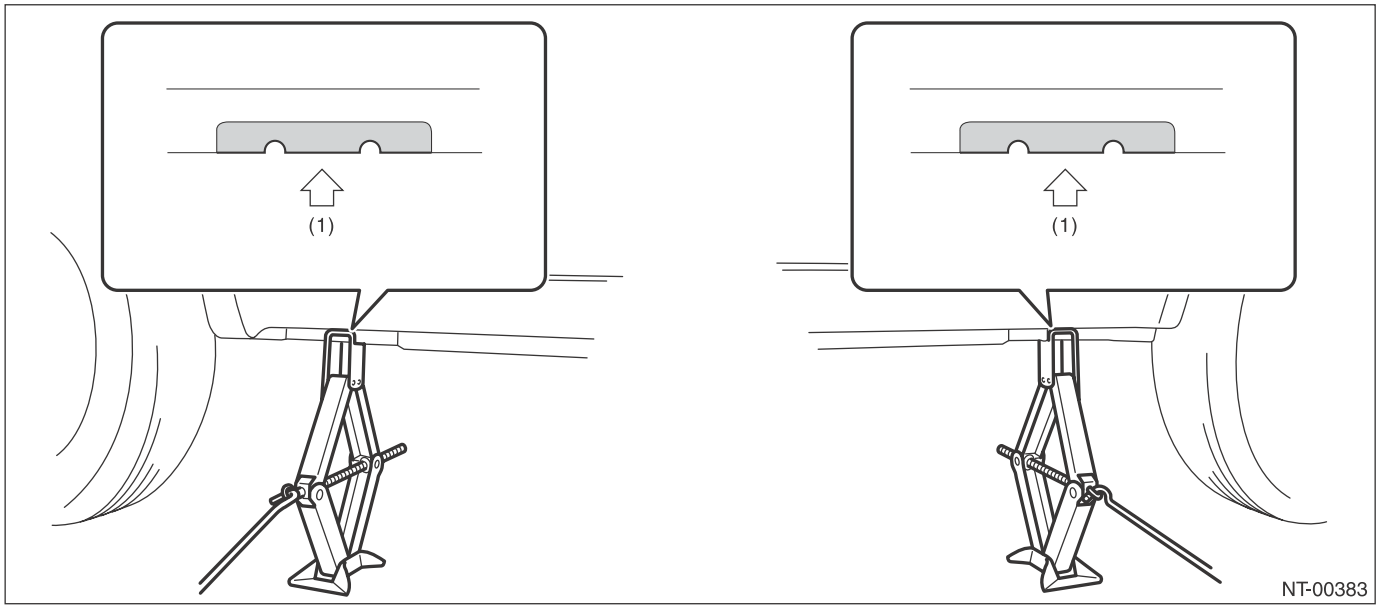

(1) Jack-up point

NOTE

- **Lift**

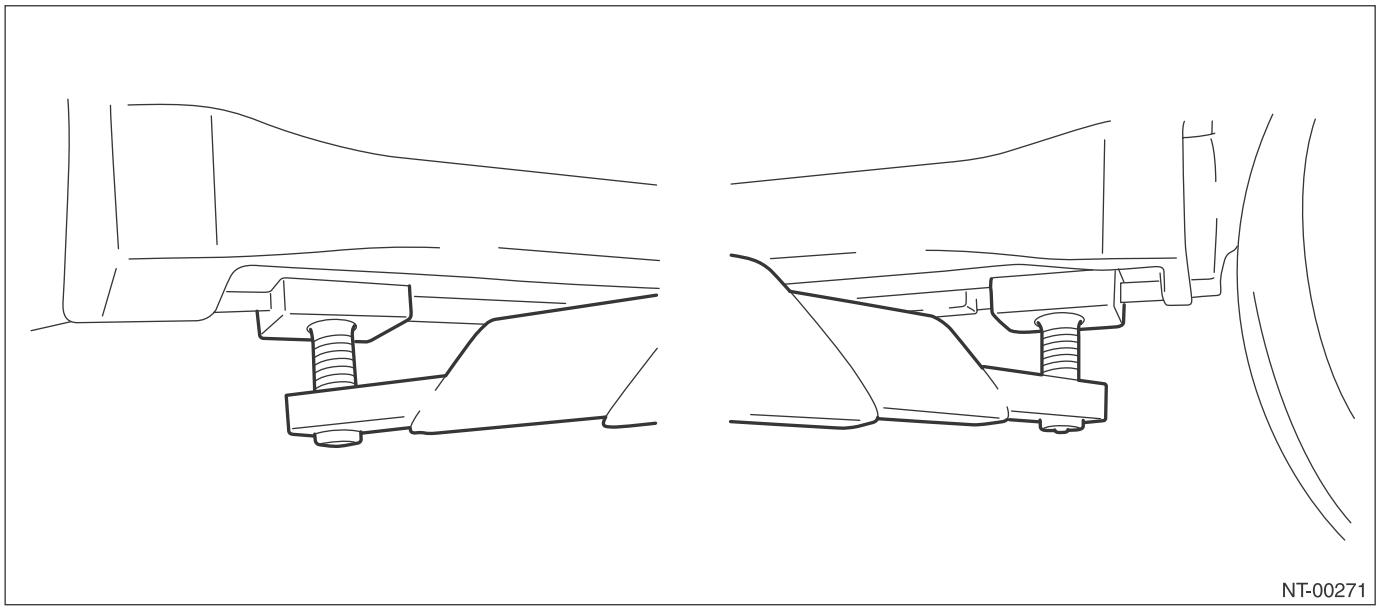

CAUTION:
For models with side under skirt, use a spacer or an attachment to lift up the vehicle securely at jack up point, without contact of side under skirt and lift.

- **RIGID RACK**

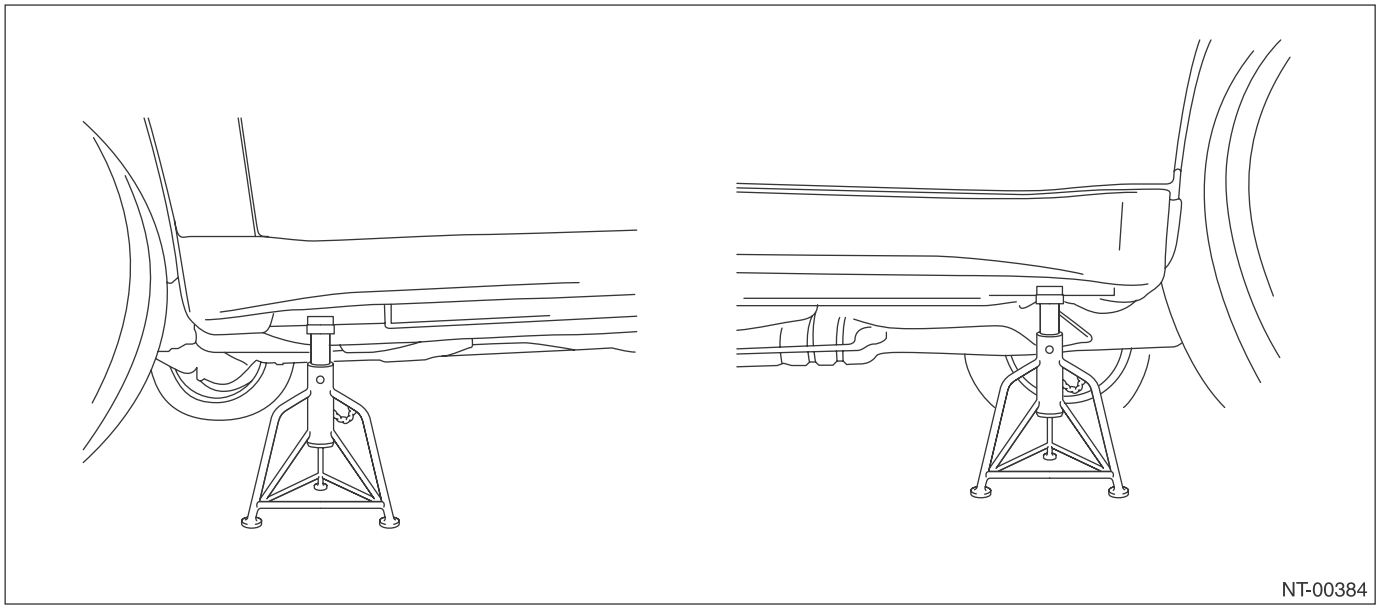

- **PLATE LIFT**

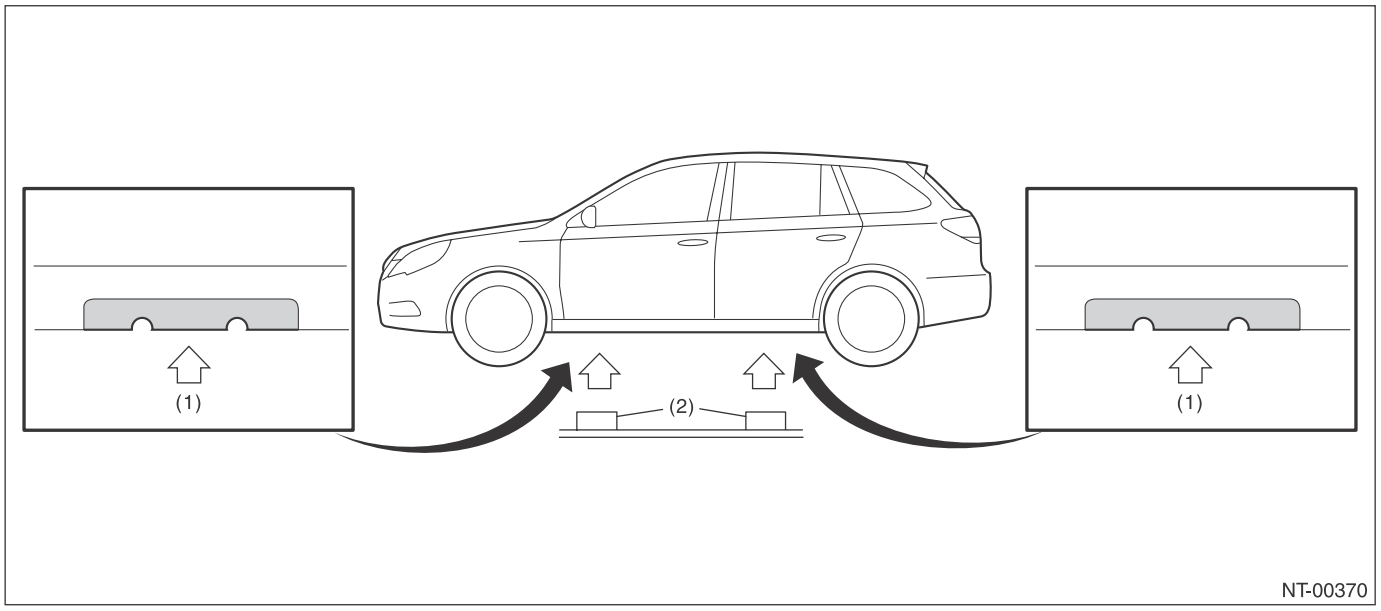

(1) Jack-up point (2) Attachment

- **Jack-up point (when using garage jack)**

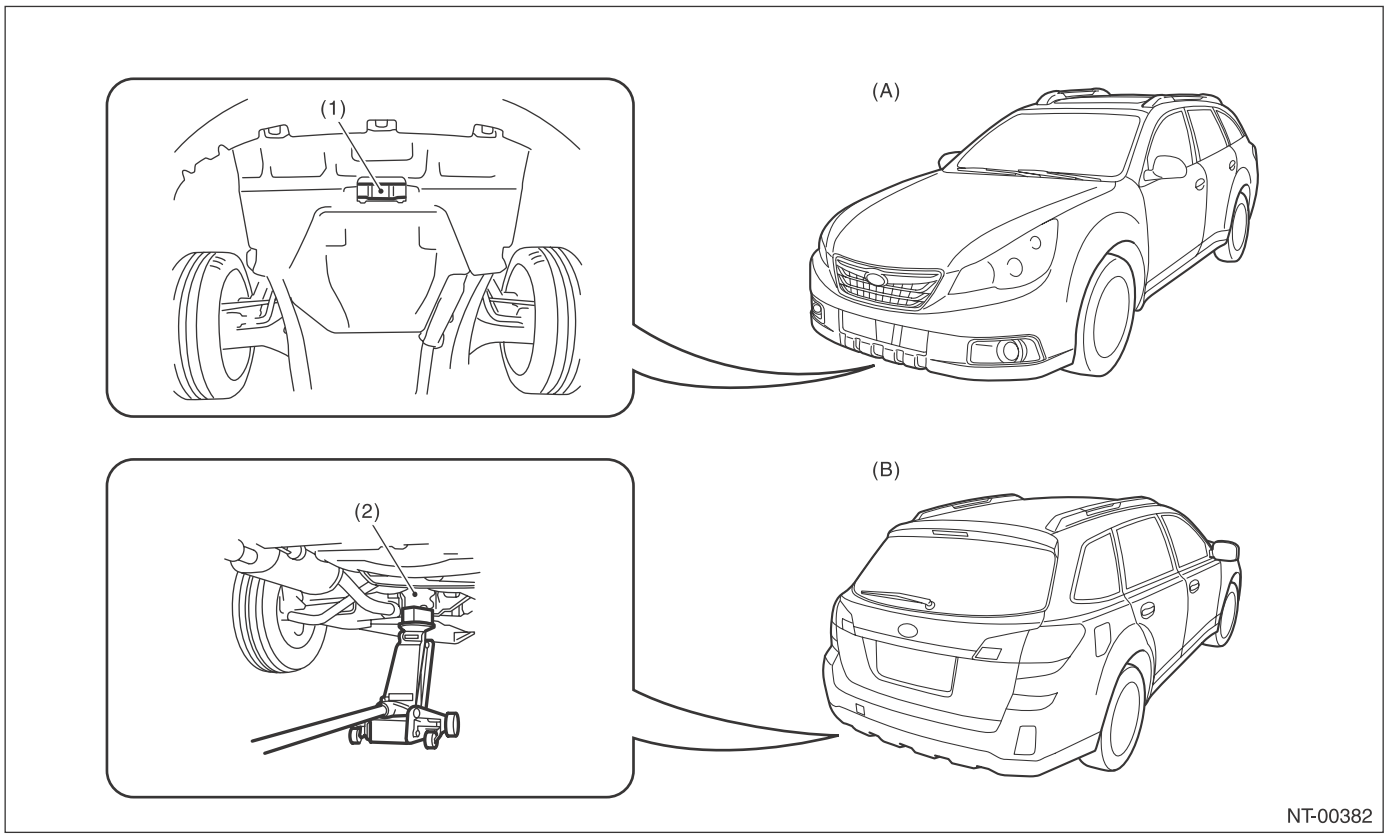

(A) Front (B) Rear
(1) Front cradle (2) Rear differential

CAUTION:
If jacking up the front side of the vehicle, make sure that the jack is attached at the center of the jack-up plate not at the sides.

NOTE

10.TIE-DOWNS

Tie-downs are used when transporting vehicles and when using the chassis dynamo. Attach tie-down only to the specified locations on the vehicle.

- **TIE-DOWN LOCATION**

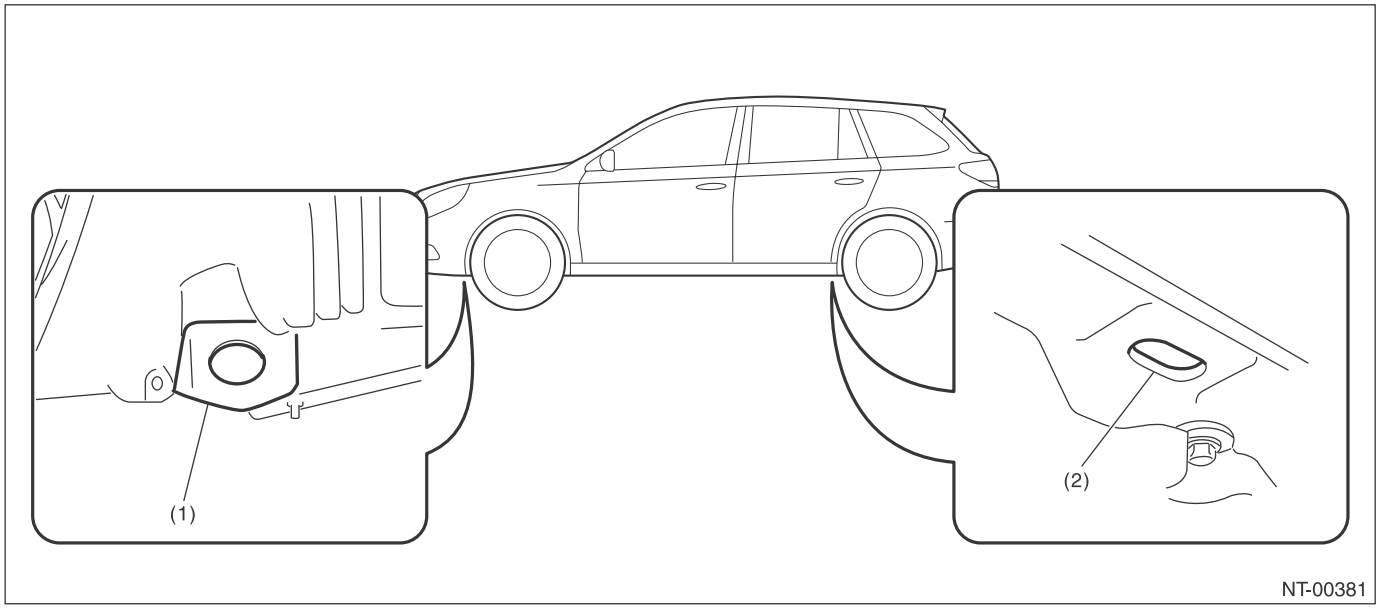

(1) Hook for tie-down
(2) Tie-down hole

- **CHAIN DIRECTION AT TIE-DOWN CONDITION**

CAUTION:

- **Pull the tie-down chains LH and RH in the same direction, but front and rear side in the counter direction.**
- **Patterns except for the followings (recommended) are not allowed.**

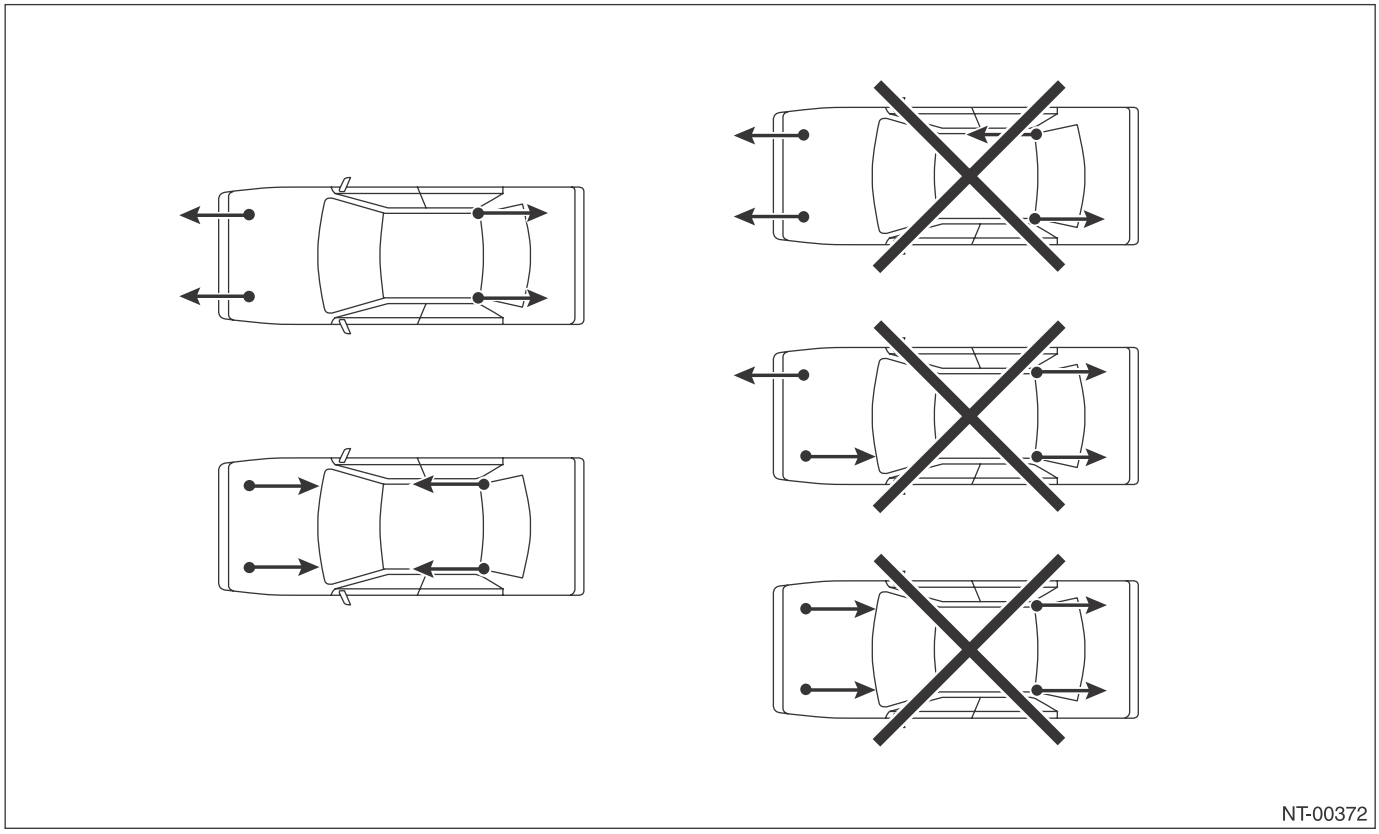

NOTE

- **TIE-DOWN RANGE**

For ground transportation

CAUTION:
When the vehicle is tied down from vehicle inside, hook the hooks of tie-down chain on the rear tie-down hooks from vehicle inside. When the vehicle is tied down from vehicle outside, hook the hooks of tie-down chain on the rear tie-down hooks from vehicle outside.

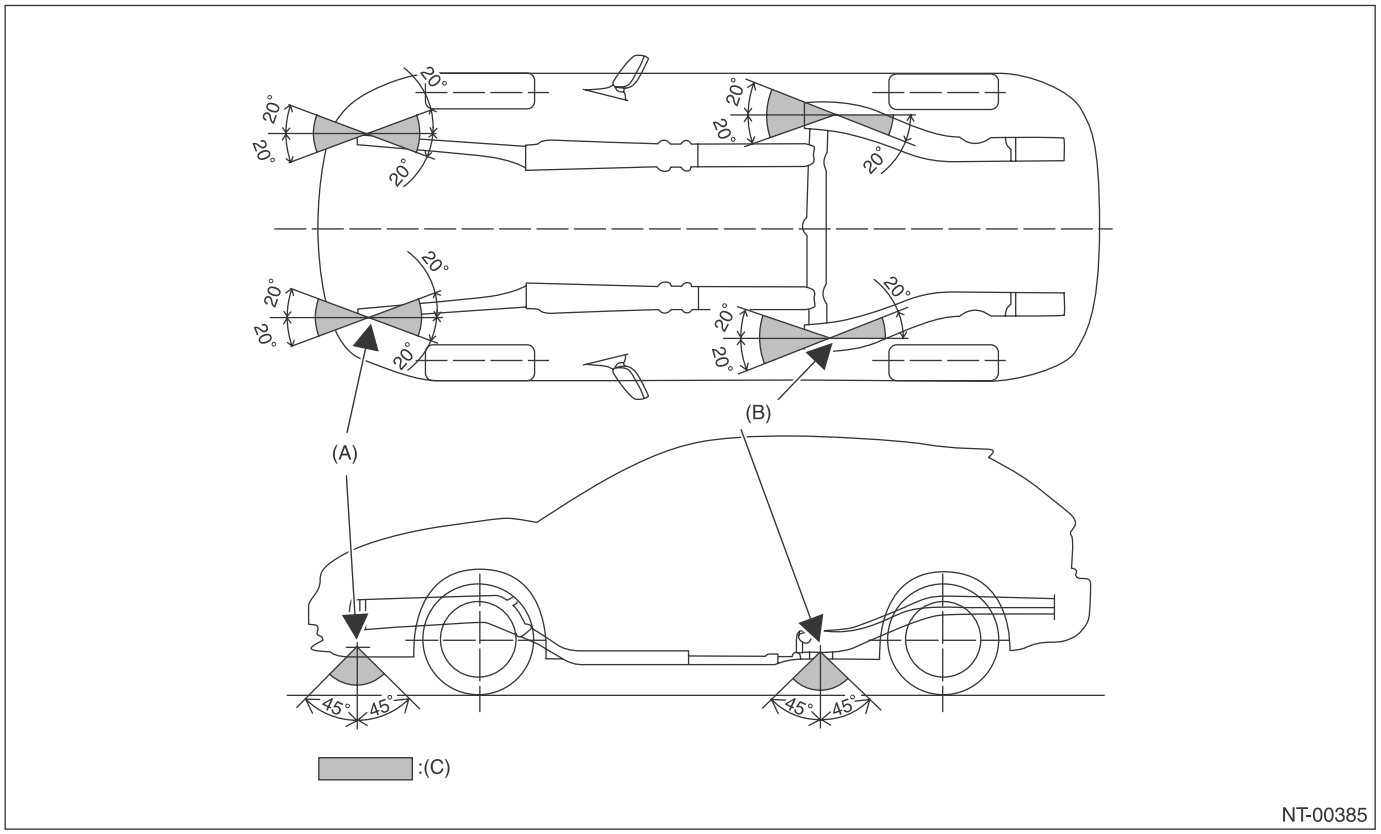

(A) Front tie-down hook

(B) Rear tie-down hole

(C) Chain pulling range at tie-down condition

For sea transportation

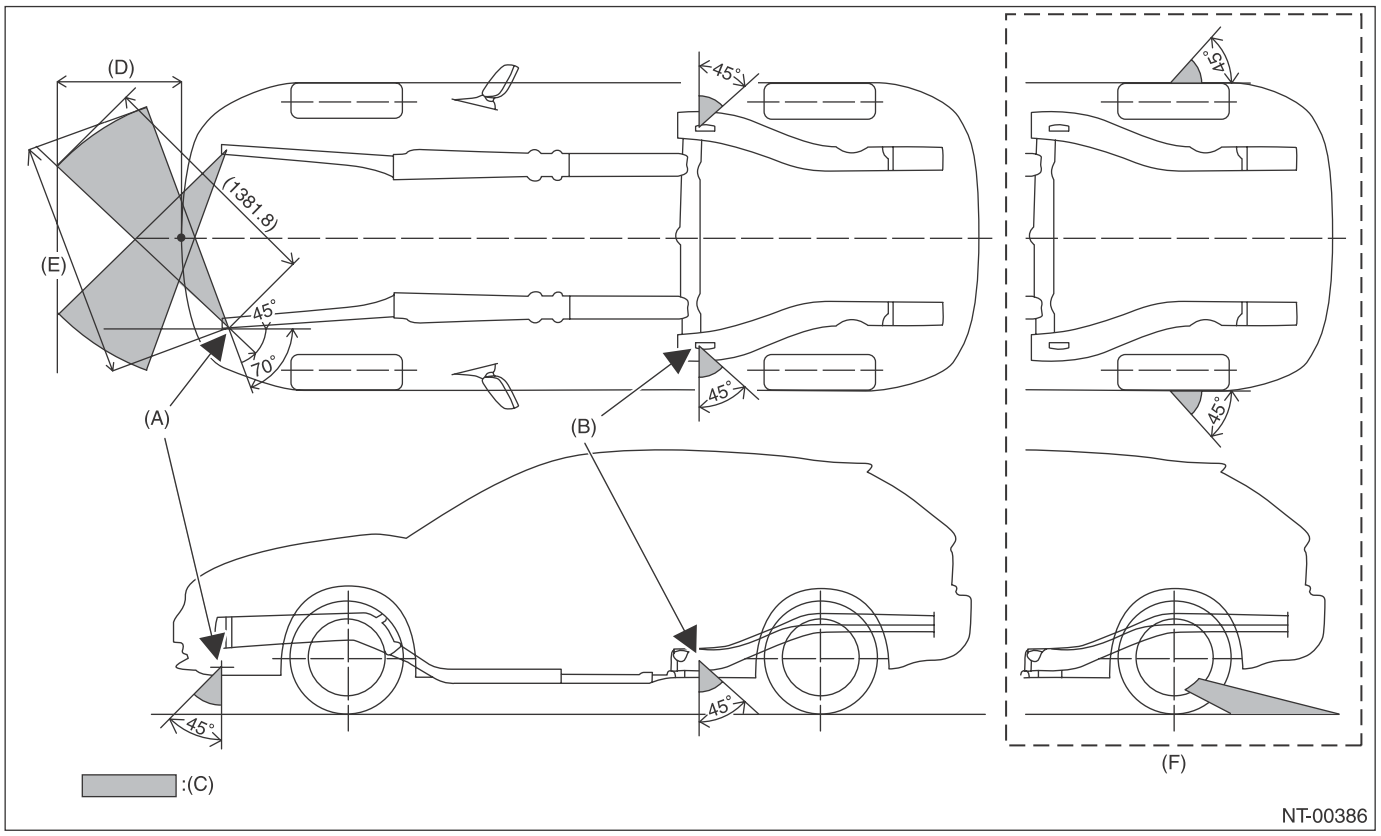

(A)	Front tie-down hook	(C)	Chain pulling range at tie-down condition	(E)	1,320 mm (52.0 in)
(B)	Tie-down hole or wheel spoke	(D)	400 mm (15.7 in)	(F)	When rear wheel is tied down

CAUTION:

- **Basically, tie down using the tie-down hole.**
- **Tie-down procedure should be followed as much as reasonably possible depending on the deck condition, however, lashing belt and vehicle must not contact each other. Also, if a wheel tie-down is conducted instead of using rear tie-down hole due to the vehicle loading condition of the deck, follow the instructions below.**
  1. **Tie-down range must be within the backward of rear wheel as shown in the figure.**
  2. **Wheel tie-down should be used only during sea transportation, and lashing belt should not contact air valve while tie-down. Be careful not damage the wheel and vehicle.**
  3. **Maximum tie-down load to each lashing belt is 5000 N (510 kgf, 1124 lbf).**
  4. **For steel wheel, do not tie down wheels.**

NOTE

- **VEHICLE SINKING VOLUME AT TIE-DOWN CONDITION**

CAUTION:
The vehicle sinking volume at tie-down condition should be less than 50 mm (1.97 in) and make sure to fix the vehicle securely.
Check to see if the tensions of chains or belts at tie-down condition are appropriate in the following procedures.
1) Measure the distance (A) between the center of wheel and highest arch point.
2) Compare the above dimensions of before and after tie-down.
3) If the distance is less than 50 mm (1.97 in), it is judged as OK. If the distance is 50 mm (1.97 in) or more, it is judged as NG because the tension is too high.

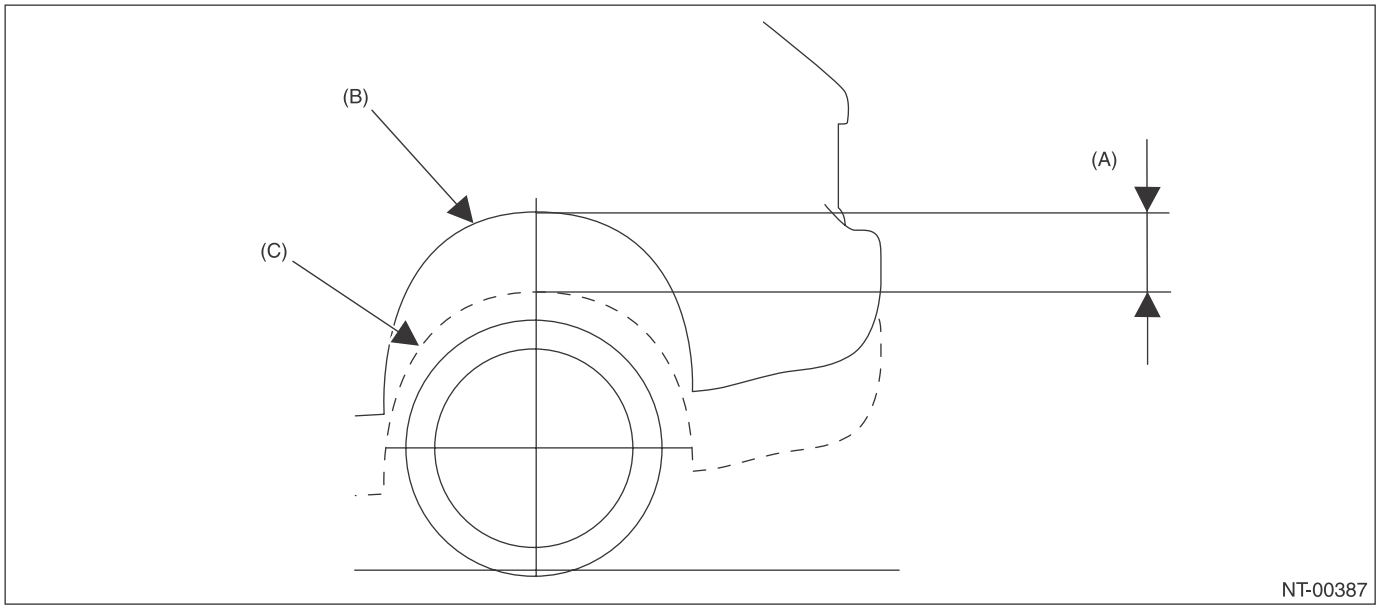

(B) Arch position before tie-down (C) Arch position after tie-down

- **NOTES FOR THE USE OF TIE-DOWN HOOK**

When the vehicle is tied down from vehicle inside, hook the hooks of tie-down chain from vehicle inside, and when the vehicle is tied down from vehicle outside, hook the hooks of tie-down chain from vehicle outside.
For front tie-down hook, use S hook and J hook, and for rear tie-down hole, use S hook, J hook and T hook.
T hook can be used only for rear tie-down hole.

11.TOWING

Avoid towing vehicles except when the vehicle cannot be driven. For models with AWD, AT or VTD, use a loader instead of towing. When towing other vehicles, pay attention to the following to prevent hook or vehicle damage resulting from excessive weight.

- Do not tow other vehicles with a front tie-down hook.
- Make sure the vehicle towing is heavier than the vehicle being towed.
- Front

Remove the hook cover, and install the hook.

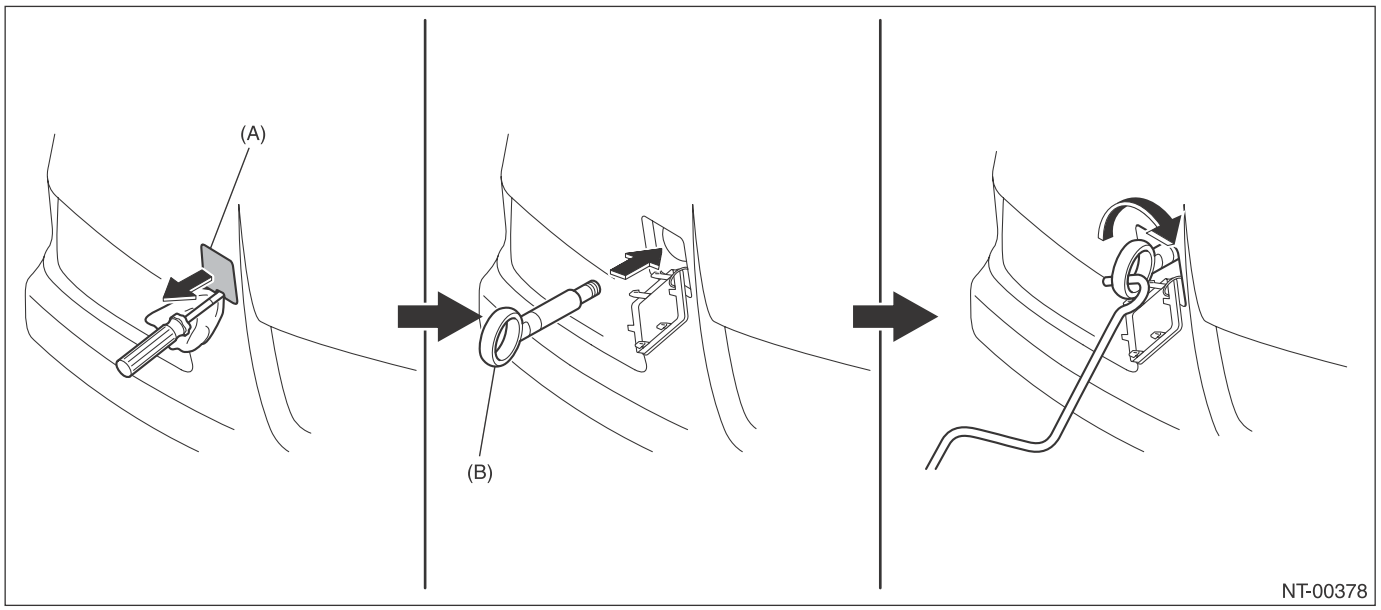

(A) Hook cover (B) Hook

- Rear

Remove the hook cover, and install the hook.

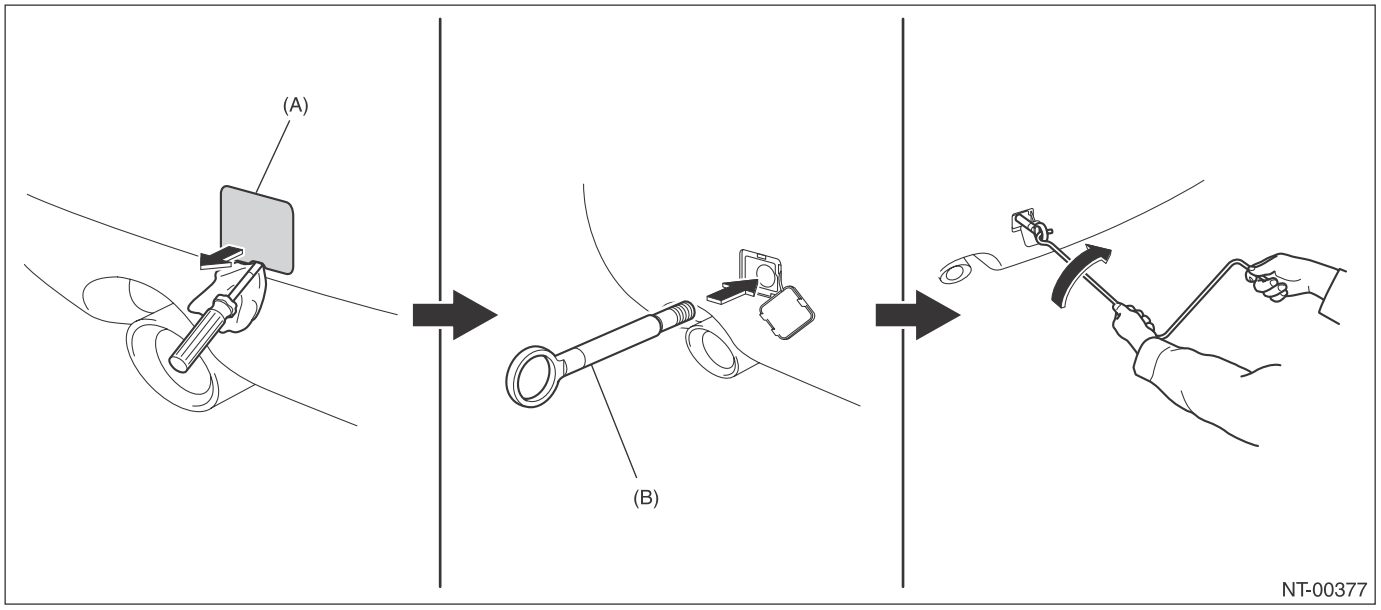

(A) Hook cover (B) Hook

Note

NOTE

- Precautions

Towing	Precautions	MT	AT
Lifting up four wheels (On a trailer) 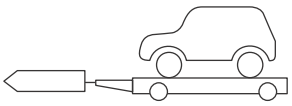 NT-00023	Towing the vehicle after lifting up all four wheels is a basic rule for AWD model.	○	○
Rope  NT-00024	• Check if both front and rear wheels are rotated normally. • AT model driving conditions: Driving speed of 30 km/h (19 MPH) or less Allow driving distance 50 km (31 miles) or less	○	▲
Raising the front wheels 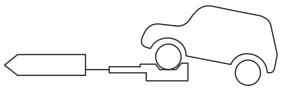 NT-00025	Prohibited for full-time AWD model.	×	×
Lifting up the front wheels 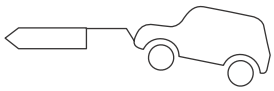 NT-00026	• Prohibited, due to damage on bumper, front grille, etc. • Do not raise the vehicle with bumper.	×	×

Marked ○: OK, Marked ×: Prohibited, Marked ▲: Conditionally OK.

CAUTION:
- **Place the shift lever in "N" position during towing.**
- **Do not lift up the rear wheels to avoid unsteady rotation.**
- **Turn the ignition key to "ACC", then check the steering wheel moves freely.**
- **Release the parking brake to avoid tire dragging.**
- **Since the power steering does not work, be careful for the heavy steering effort. (When engine is stopped)**
- **Since the servo brake does not work, be careful that the brake is not applied effectively. (When engine is stopped)**
- **In case of the malfunction of internal transmission or drive system, lift up four wheels (on a trailer) for towing.**
- **Do not use towing hook except when towing.**
- **Make sure to detach the towing hook after towing. If the hook remains attached, airbag may not operate properly when receiving a shock from front side.**

12.FRONT HOOD DAMPER STAY

1) When performing inspection or general maintenance, install the damper stay to the normal position.

CAUTION:
When performing inspection or general maintenance, do not remove the damper stay.

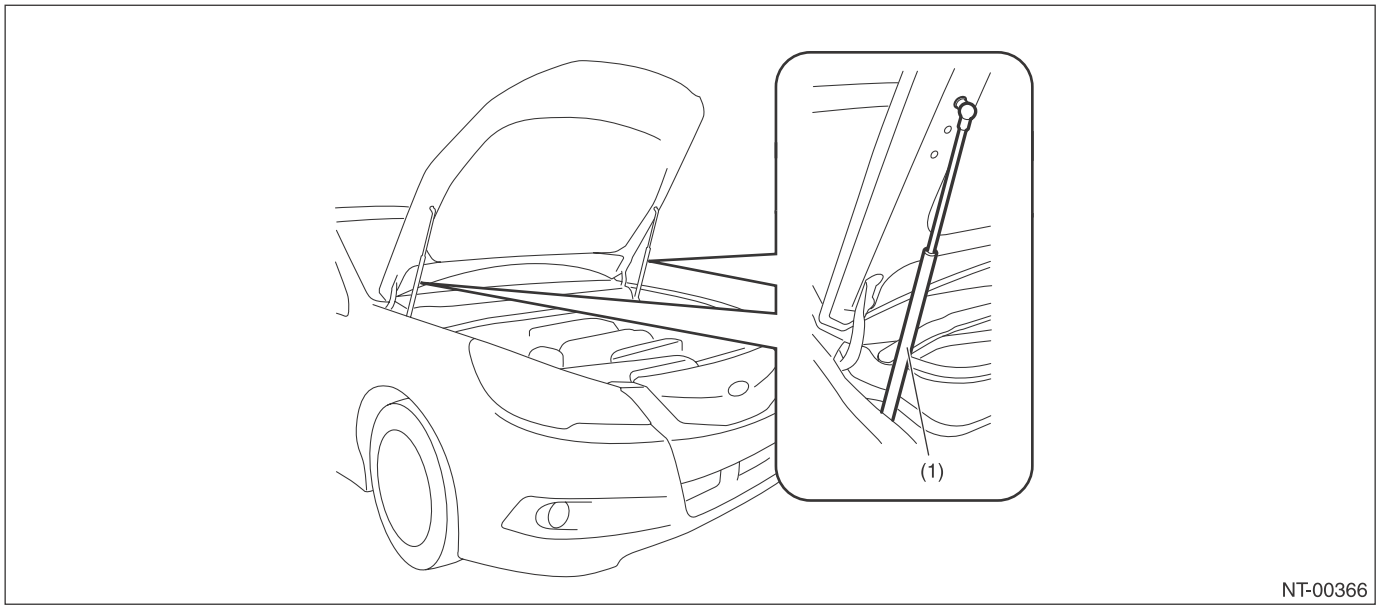

(1) Normal installation position

NOTE

2) When front hood needs to open wider, set the damper stay into the hole of lower hood as shown in the figure below.

Tightening torque:
<Ref. to EB-2, FRONT HOOD, COMPONENT, General Description.>

CAUTION:
- **Always perform inspection and general maintenance works with both damper stays attached.**
- **Do not keep detaching the damper stay on one side.**
- **The hood cannot be closed with the hood dumper at the full open position. When closing the hood, tie the hood striker and radiator panel and secure them.**
- **After work, make sure to return the damper stay to normal installation position and tighten the bolt to the specified torque.**

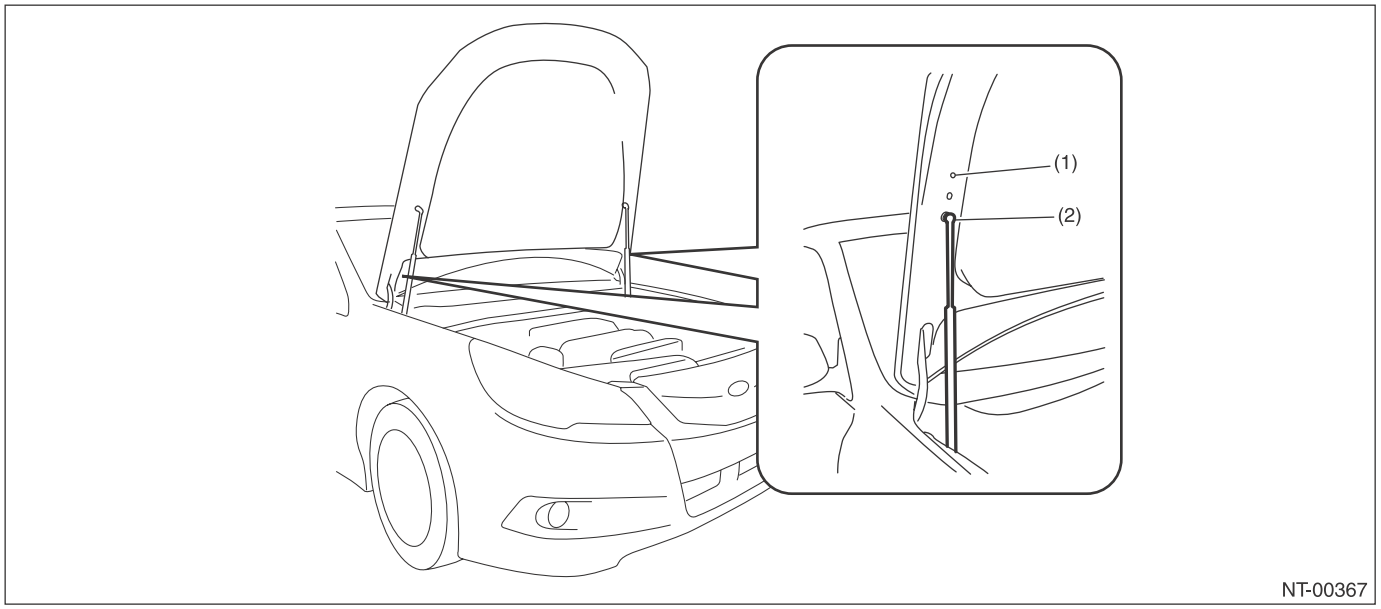

(1) Normal installation position (2) Installation position at full open

13.GENERAL SCAN TOOL

Using general scan tools will greatly improve the efficiency of repairing engine electronic throttle controls. Subaru Select Monitor can be used to diagnose the engine, VDC, air conditioner and other parts.

14.AWD CIRCUIT MEASURES

1) Full-time AWD MT model
Since viscous coupling (limited slip differential) is used in the center differential, cut-off of AWD circuit cannot be carried out.
2) Full-time AWD 5AT model
Since VTD type is used in the center differential, cut-off of AWD circuit cannot be carried out.
3) Full-time AWD CVT model
Since electronically controlled MT-P hydraulic multi-plate clutch is adapted for center differential, switch to FWD by using Subaru Select Monitor.

15.SPEEDOMETER TEST

1) Rear wheel free roller system
(1) Set the free roller on the floor of rear wheel side securely according to the wheel base and rear tread of the vehicle.
(2) Let the vehicle ride on the tester and free roller gently.

CAUTION:
Fix the vehicle using a pulling metal (chain or wire) to the front and rear towing hooks or tie-down hook to prevent the lateral runout of front wheels and springing out of vehicle.

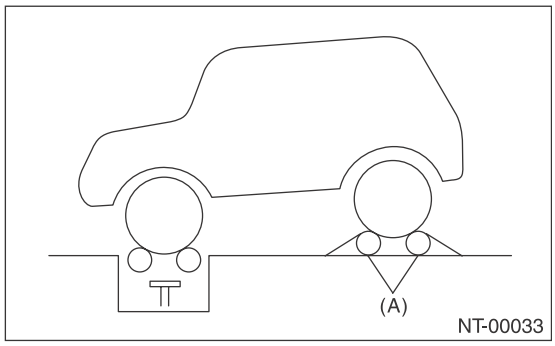

(A) Free roller

(3) Set the speedometer tester.
(4) Conduct the speedometer test work.

CAUTION:
Do not operate the clutch quickly and do not accelerate or decelerate suddenly during work.

2) Rear wheel jack-up system
(1) Set the vehicle on speedometer tester.

CAUTION:
Fix the vehicle using a pulling metal (chain or wire) to the front and rear towing hooks or tie-down hook to prevent the lateral runout of front wheels and springing out of vehicle.
(2) Jack up the rear wheels and set the rigid racks to the specified locations of side sill.

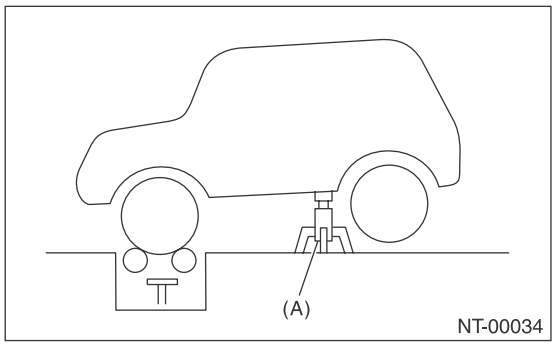

(A) RIGID RACK

(3) Conduct the speedometer test work.

CAUTION:
Do not operate the clutch quickly and do not accelerate or decelerate suddenly during work.

16.BRAKE TEST

1) Full-time AWD MT model
(1) Perform this test after driving the vehicle 2 to 3 km (1.24 to 1.86 miles) on road in order to stabilize the viscous torque of viscous coupling.
(2) Keep the front or rear wheels on the ground for this test.

NOTE:
Effect of the viscous torque on braking force will be added approx. 25 kg compared with FWD model.

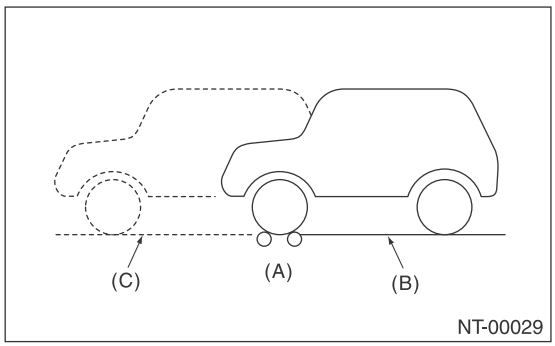

(A) Brake tester
(B) Position for measuring front wheel
(C) Position for measuring rear wheel

(3) When the brake dragging force is large.
• Check the dragging of brake pad or brake shoe.
• Since it may be affected by the viscosity of viscous coupling, jack up either of the front or rear two wheels to check the each wheel rotation condition with the viscous coupling affection removed.

2) Full-time AWD AT model
(1) Keep the front or rear wheels on the ground during measurement.

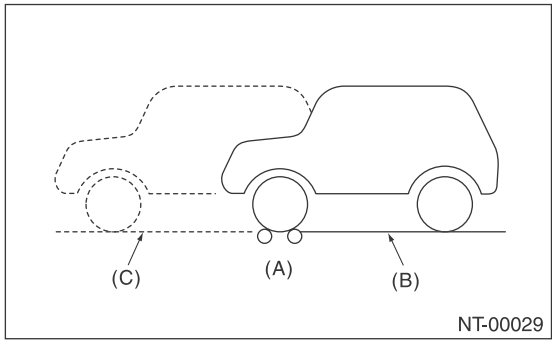

(A) Brake tester
(B) Position for measuring front wheel
(C) Position for measuring rear wheel

(2) When the brake dragging force is large.
• Check the dragging of brake pad or brake shoe.

Specifications:

	Braking force
Rear wheel total	10% or more of load on front or rear wheels
Difference between right and left wheels	8% or less of load on front or rear wheels
Grand total	50% or more of vehicle weight at the time of test

• When measurement is difficult to carry out because both of front wheels are locked, break force measurement in this condition conforms to standard grand total.

17.ON THE CAR WHEEL BALANCING

CAUTION:
• Carry out the procedures after measuring the balance of each single tire.
• Set the vehicle so that the front and rear wheels are the same height.
• Release the parking brake during measurement.
• Rotate each wheel by hands, and make sure it rotates without dragging.
• Do not operate the clutch quickly and do not accelerate or decelerate suddenly during work.
• When an error is indicated during engine drive, do not use the motor drive together.

1) Set the rigid rack to the specified locations of side sill, jack up the front or rear two wheels of non-measuring side and set the pickup stands to two wheels of measuring side.

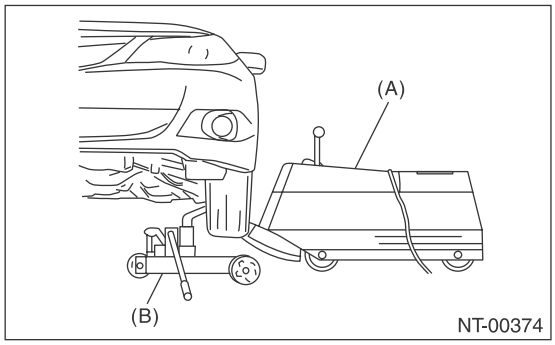

(A) Balancer body
(B) Pickup stand (left and right)

2) For drive wheel, drive the tires with engine for measurement.
3) For non-drive wheel, drive the tires from the on the car wheel balancer for measurement.

IDENTIFICATION

ID

Page
1. Identification 2

1. Identification

A: IDENTIFICATION

1. IDENTIFICATION NUMBER & LABEL LOCATIONS

The V.I.N. (Vehicle Identification Numbers) is used to classify the vehicle.

- **POSITIONING OF THE PLATE LABEL FOR IDENTIFICATION**

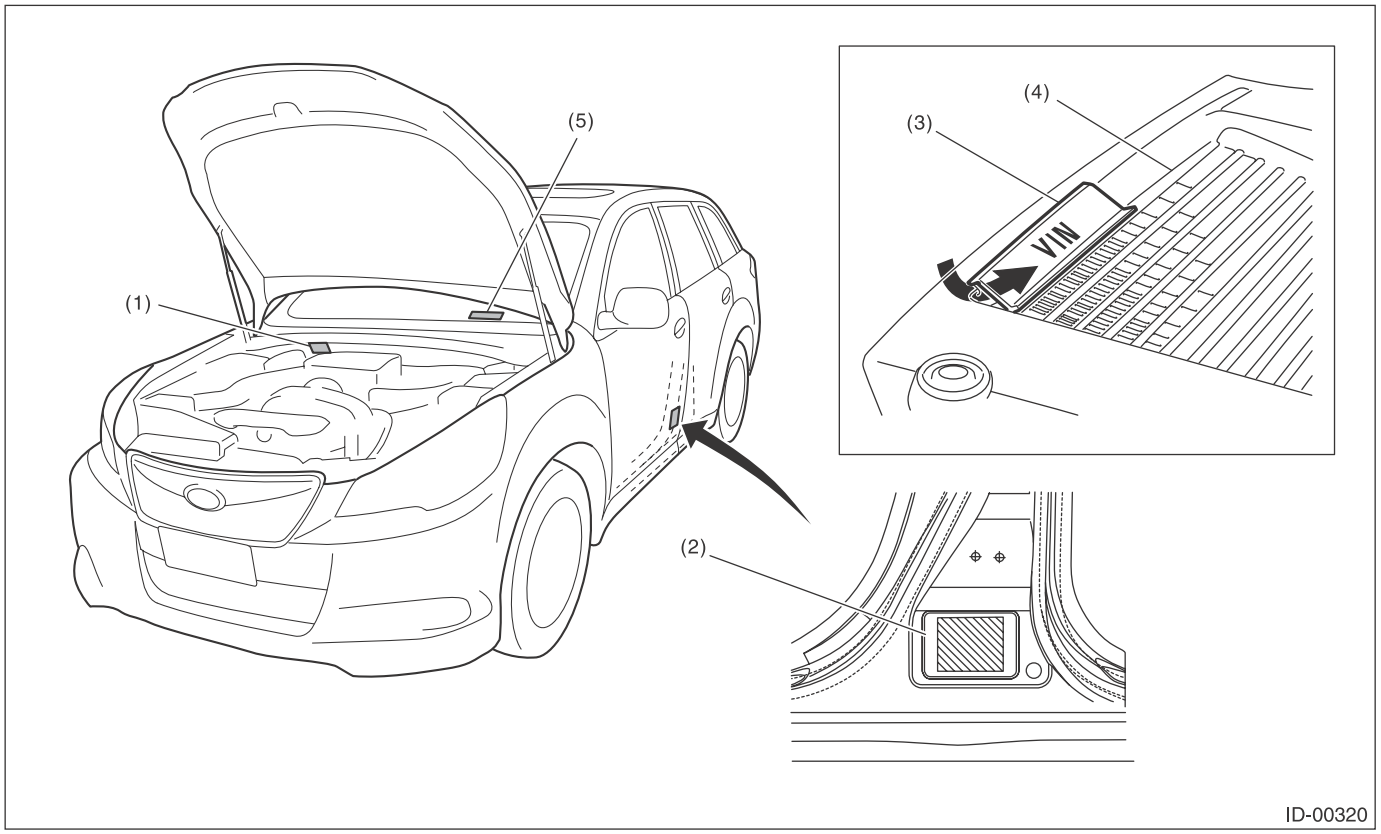

(1) Vehicle identification number (V.I.N.)
(2) FMVSS label (U.S. model) (left side)
CMVSS label (Canada model) (left side)
Model No. label (Korea model) (right side)
(3) VIN cover (turbo model)
(4) Intercooler (turbo model)
(5) VIN plate

- **ENGINE**

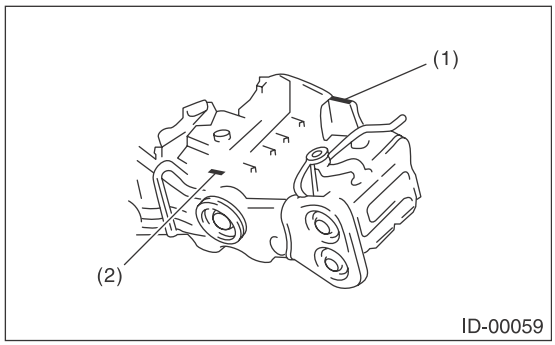

(1) Engine serial number (punch mark)
(2) Engine type (casting) crankcase upper side

- **AUTOMATIC TRANSMISSION**

5AT

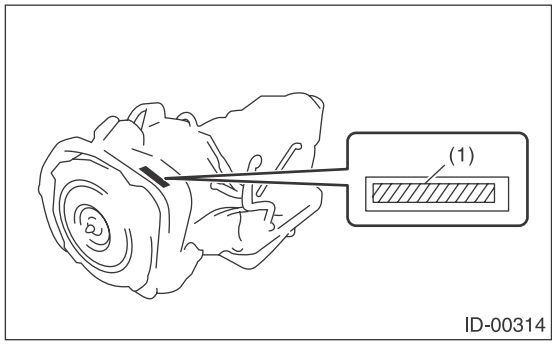

(1) Transmission serial number and AT type label

CVT

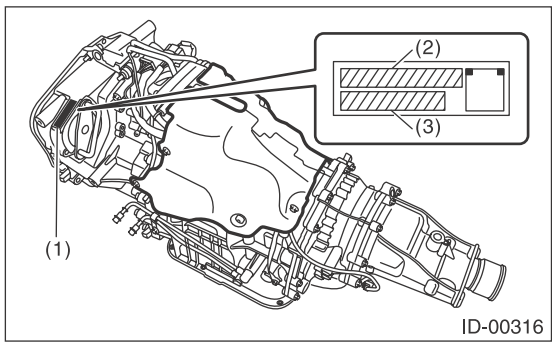

(1) Label
(2) CVT type label
(3) Transmission serial No. label

- **MANUAL TRANSMISSION**

6MT

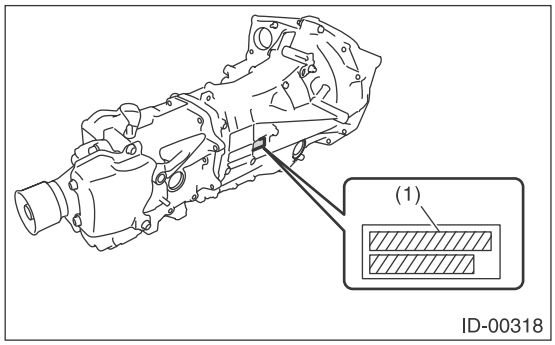

(1) Transmission serial number and MT type label

- **REAR DIFFERENTIAL**

T-type

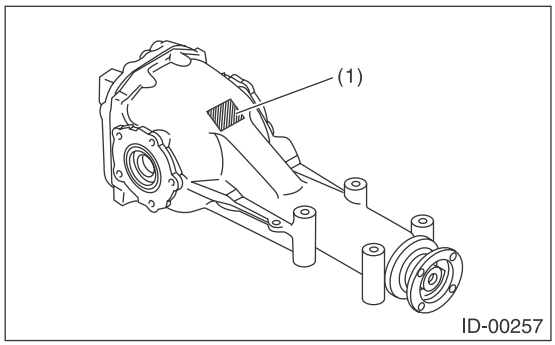

(1) Type (white paint)

VA1-type

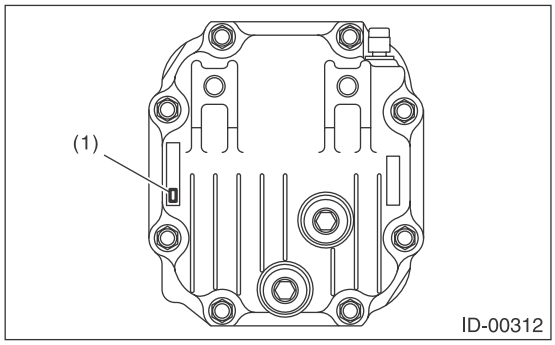

(1) Type (label)

VA2-type

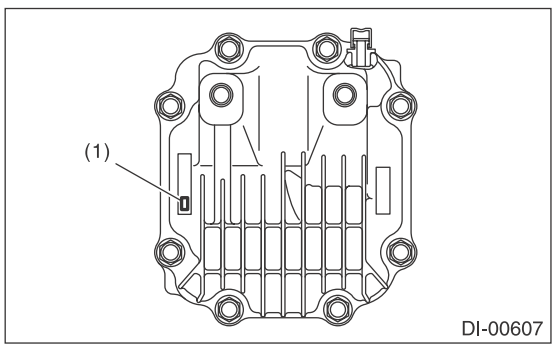

(1) Type (label)

- **FMVSS LABEL, CMVSS LABEL**

Example

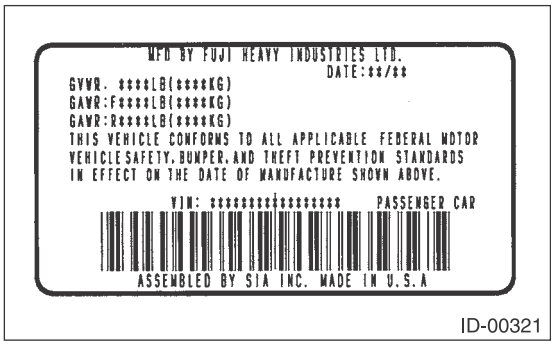

ID-00321

- **MODEL NUMBER LABEL**

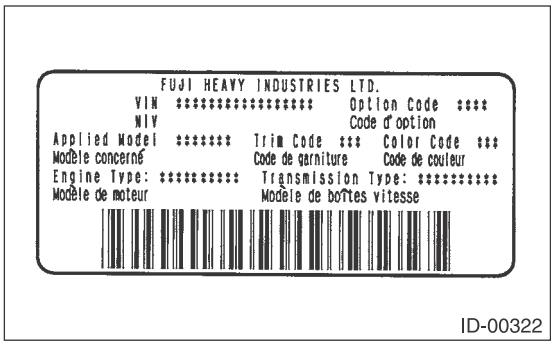

ID-00322

2. MEANING OF V.I.N.

The meaning of the V.I.N. is as follows:
]4S3BMAA6XA1210001[
The starting and ending brackets ( ] [ ) are stop marks.

Digits	Code	Meaning	Details
1 — 3	4S3	Manufacturer of body area	4S3: All models except OUTBACK model for C0 4S4: OUTBACK for C0
4	B	Car line	B: LEGACY/OUTBACK
5	M	Body type	M: Sedan R: Wagon
6	A	Total emission and destination	A: 2.5L non-turbo for U4 B: 2.5L non-turbo for U5 C: 2.5L non-turbo for U6 D: 3.6L non-turbo for U5 E: 3.6L non-turbo for U6 F: 2.5L turbo for U4 G: 2.5L non-turbo for C0 H: 2.5L non-turbo for C5 J: 3.6L non-turbo for C0 K: 2.5L turbo for C0 L: 2.5L non-turbo for C6 M: 3.6L non-turbo for C6
7	A	Grade	A: Base B: Premium C: Premium + cold weather package D: Premium + 6CD harman/kardon E: Premium + M/R F: Premium + 6CD harman/kardon + cold weather package G: Premium + M/R + cold weather package H: Premium + M/R + cold weather package + 6CD harman/kardon J: Limited + 6CD harman/kardon K: Limited + 6CD harman/kardon + M/R L: Limited + M/R + navigation M: Limited + M/R
8	6	Restraint system or GVWR Class	6: Manual belt, dual airbag, side airbag for seat back + curtain airbag for roof (except for OUTBACK model) C: Manual belt, dual airbag, side airbag for seat back + curtain airbag for roof, class C (GVWR 4001 — 5000 lb) (for OUTBACK model)
9	X	Check digit	0 — 9&X
10	A	Model year	A: 2010MY
11	1	Transmission type	1: Full-time AWD 6MT 2: Full-time AWD 5AT 3: Full-time AWD CVT
12 — 17	210001	Serial number	210001 — : Sedan 310001 — : Wagon

3. MODEL NUMBER PLATE

The model number plate indicates applied model, option code, trim code, engine type, transmission type and the exterior color code. This information is helpful when placing orders for parts.

- **BM9AY4M**

Digits	Code	Meaning	Details
1	B	Series	LEGACY
2	M	Body type	M: Sedan R: Wagon
3	9	Total engine displacement Drive system Suspension system	9: 2.5L AWD F: 3.6L AWD
4	A	Model year	A: 2010MY
5	Y	Destination	Y: US, Canada
6	4	Grade	4 : 2.5i 5: 2.5i Premium 6: 2.5i Limited C: 2.5GT Premium D: 2.5GT Limited F: 3.6R H: 3.6R Limited K: OUTBACK 2.5i L: OUTBACK 2.5i Premium M: OUTBACK 2.5i Limited S: OUTBACK 3.6R U: OUTBACK 3.6R Limited
7	M	Transmission, fuel feed system	9: SOHC MFI CVT M: SOHC MFI 6MT U: DOHC MFI 5AT X: DOHC MFI turbo 6MT

The engine and transmission type are as follows.

- **ENGINE**

EJ253CDAFB

Digits	Code	Meaning	Details
1 and 2	EJ	Engine type	EJ: 4 cylinders EZ: 6 cylinders
3 and 4	25	Displacement	25: 2.5L 36: 3.6L
5	3	Fuel feed system	3: MFI non-turbo (SOHC) 5: MFI turbo D: MFI non-turbo (DOHC, H6)
6	C	Emission regulations	A: For states not using California emission standards B: For USA C: For states using California emission standards
7	D	Mounted transmission	C: D5AT D: 6MT (T75) U: CVT
8 — 10	AFB	Detailed specifications	Used when ordering parts. For details, refer to the parts catalog.

• TRANSMISSION

1. MT

TY756WCAAA

Digits	Code	Meaning	Details
1	T	Transmission	T: Transmission
2	Y	Transmission type	Y: Full-time AWD MT center differential
3 and 4	75	Identification	75: 6MT
5	6	Series	6: 6MT
6	W	Transmission specifications	W: Full-time AWD 6MT single range with viscous coupling center differential
7	C	Equipped vehicle	C: 2.5L SOHC non-turbo L: 2.5L DOHC turbo
8 — 10	AAA	Detailed specifications	Used when ordering parts. For details, refer to the parts catalog.

2. AT

TG5D8CJAAA

Digits	Code	Meaning	Details
1	T	Transmission	T: Transmission
2	G	Transmission type	G: Full-time AWD 5AT center differential
3 and 4	5D	Identification	5D: 5AT
5	8	Series	8: 5AT
6	C	Transmission specifications	C: Full-time AWD VTD 5AT
7	J	Equipped vehicle	J: 3.6L DOHC non-turbo
8 — 10	AAA	Detailed specifications	Used when ordering parts. For details, refer to the parts catalog.

3. CVT

TR690JHAAA

Digits	Code	Meaning	Details
1	T	Transmission	T: Transmission
2	R	Transmission type	R: Full-time AWD CVT
3 and 4	69	Distance between gear center	69: CVT
5	0	Series	0: CVT
6	J	Transmission specifications	J: Active torque split type full-time AWD CVT
7	H	Mounted engine	H: 2.5L SOHC non-turbo
8 — 10	AAA	Detailed specifications	Used when ordering parts. For details, refer to the parts catalog.

• Rear differential

Code	Reduction gear ratio	LSD
B1	4.111	No
B2	3.900	No
XC	3.083	No
XD	3.700	No
T2	4.111	No
TP	4.444	No

• OPTION

U5DC

Digits	Code	Meaning	Details
1 — 2	U5	Destination	C0: Canada C5: Canada (PZEV) C6: Korea U4: USA U5: USA (for states using California emission standards) U6: USA (for states not using California emission standards)
3	D	Option equipment	A: Cruise control B: A package, power seat, cruise control C: A package, power seat, genuine leather seat, cruise control D: A package, cruise control 6: Special edition
4	C	Option equipment	A: Winter pack, side & curtain airbag B: Side & curtain airbag C: Winter pack, side & curtain airbag, sunroof D: Side & curtain airbag, sunroof E: Winter pack, navigation + wide monitor, side & curtain airbag, sunroof F: Dark colored glass, winter pack, side & curtain airbag, sunroof F: Dark colored glass, side & curtain airbag, sunroof H: Dark colored glass, winter pack, navigation + wide monitor, side & curtain airbag, sunroof I: Dark colored glass, winter pack, side & curtain airbag J: Dark colored glass, side & curtain airbag V: harman/kardon audio, side & curtain airbag, sunroof, winter pack V: harman/kardon audio, side & curtain airbag, winter pack Y: Dark colored glass, winter pack, harman/kardon audio, side & curtain airbag, sunroof Z: Dark colored glass, winter pack, harman/kardon audio, side & curtain airbag 1: Special edition 2: Special edition

RECOMMENDED MATERIALS

RM

Page
1. Recommended Materials 2

1. Recommended Materials

A: RECOMMENDED MATERIALS

1. GENERAL

To insure the best performance, always use the specified oil, gasoline, adhesive, sealant, etc. or a substitute of equivalent quality.

2. FUEL

• Use unleaded gasoline to reduce air pollution, because using leaded gasoline will damage the catalytic converter.
• Do not use the low quality gasoline, or improper fuel such as diesel fuel, fuel alcohol, or gasoline additive because they will adversely affect on engine components.
• Always use gasoline that is equivalent to that prescribed in the owner's manual or that of high octane value. There is the possibility of damaging or improper operation of the engine and fuel injection system if the specifications are not observed. Use the prescribed gasoline type to maintain proper vehicle performance.

3. LUBRICANTS

Use the lubricants shown in the table below, or equivalent. See the table below to choose the correct SAE viscosity.

LUBRICANT	Recommended materials	
	API standard	ILSAC standard
Engine oil Choose oil suitable for the standard from the right.	SM grade "Energy conserving" 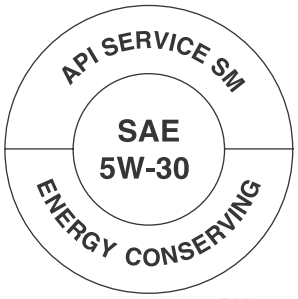 RM-00049	GF-4  RM-00002
Manual Transmission Oil	GL-5	—
Front differential gear oil	GL-5	—
Rear differential gear oil	GL-5	—

SAE viscosity No. and applicable temperature
Engine oil

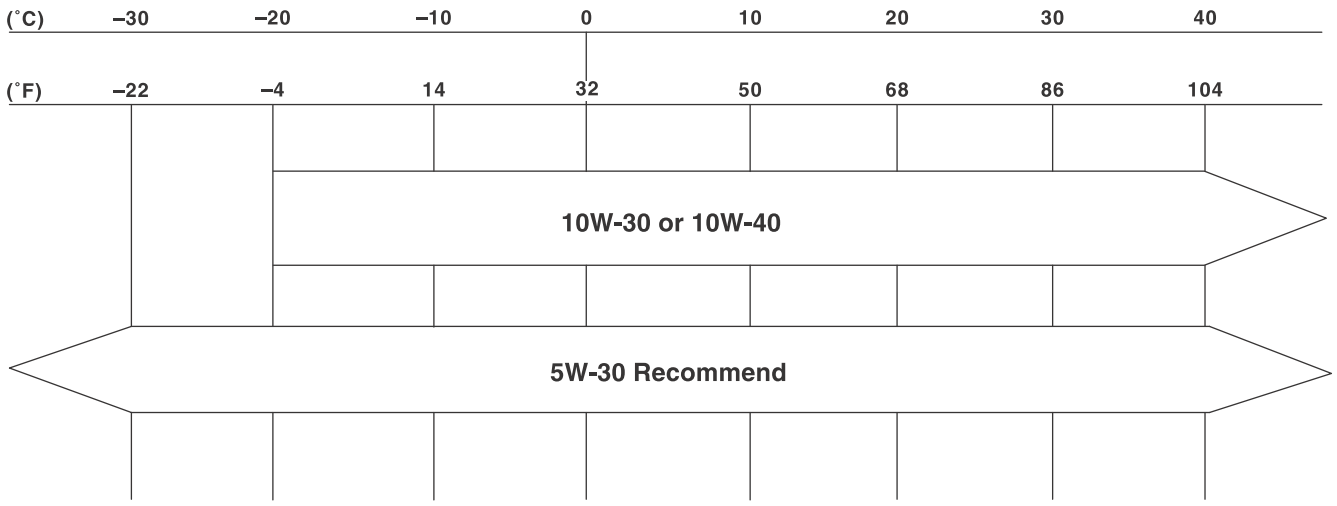

RM-00059

Manual transmission oil, rear differential gear oil, AT and CVT front differential gear oil

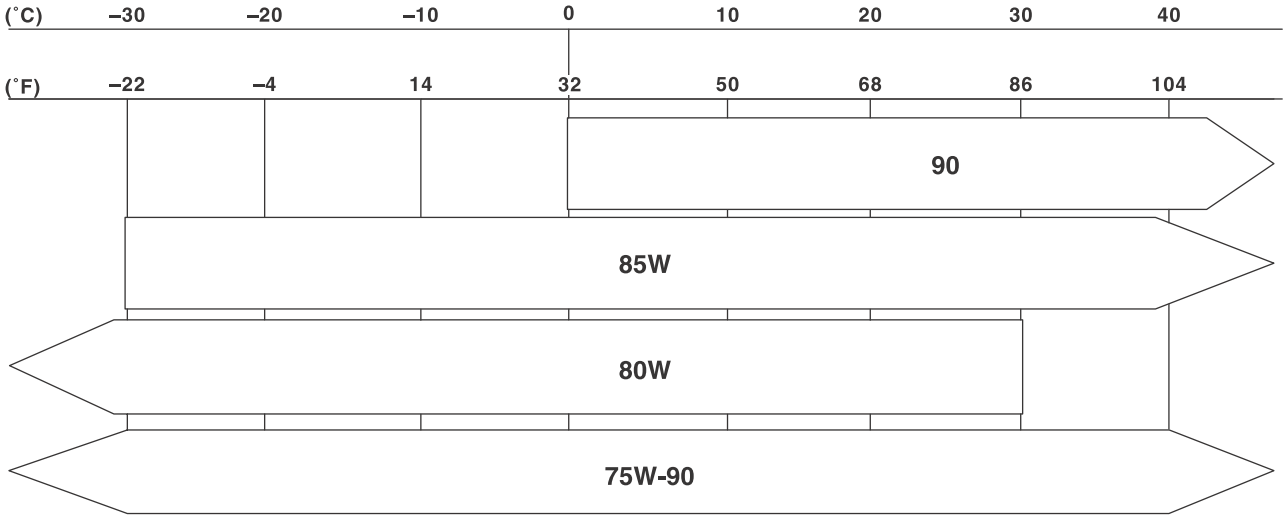

RM-00004

4. FLUID

Use the fluids specified in the table below. Do not mix two different kinds or makes of fluid.

CAUTION:
Be sure to use the recommended or equivalent ATF. Using material except recommended one or substitute would cause trouble.

Fluid		Recommended materials	Item number	Alternative
Automatic transmission fluid	CVT	SUBARU CVT OIL FOR LINEARTRONIC	K0425Y0710	—
	5AT	SUBARU ATF HP	—	IDEMITSU: ATF HP
Power steering fluid		SUBARU PS fluid	K0515YA000	DEXRON III
Brake fluid		FMVSS No. 116 DOT3 or DOT4	—	—
Clutch fluid		FMVSS No. 116 DOT3	—	—

5. COOLANT

Use genuine coolant to protect the engine.

Engine coolant	Recommended materials	Item number	Alternative
Coolant	SUBARU SUPER COOLANT	K0670Y0001	—
Cooling system protective agent	Cooling system conditioner	SOA345001	—

6. REFRIGERANT

Standard air conditioners on Subaru vehicles use HFC134a refrigerant. Do not mix it with other refrigerants. Also, do not use any compressor oil other than DENSO OIL 8.

Air Conditioner	Recommended materials	Item number	Alternative
Refrigerant	HFC134a	—	—
Compressor oil	DENSO OIL 8	—	—

7. GREASE

Use grease and supplementary lubricants shown in the table below.

Grease	Application point	Recommended materials	Item number	Alternative
Supplementary lubricants	Oxygen sensor	Spray type lubricant	—	—
Grease	• MT main shaft (spline parts) • MT main shaft (oil seal lip) • Clutch release lever	NICHIMOLY N-130	—	—
	Clutch master cylinder push rod	SILICONE GREASE G-40M	—	—
	• Gear shift lever • Clutch operating cylinder • Clutch pedal • Brake pedal • Release bearing • Select lever (Except for shift lock parts)	NIGTIGHT LYW No. 2 grease	—	—
	Select lever (Shift lock parts)	Multemp D	—	—
	• Door latch • Door striker	SILICONE GREASE G-30M	004404002	—
	Steering gearbox	VALIANT GREASE M2	003608001	ONE LUBER SG or MO
	Disc brake (lock pin, guide pin, piston boot)	Brake grease (NIGLUBE RX-2)	K0779GA102	—
	Between brake pad and shim	Molykote AS-880N	K0777YA010	—
	Brake pad clip	Molykote M7439 (Brake Grease 60G)	—	—
	Front axle AAR	One-Luber GKN-C	—	—
	• Rear axle BJ • Rear axle EBJ	NKG106	—	—
	Rear axle DOJ	NKG205	—	—

8. ADHESIVE

Use the adhesives shown in the table below, or equivalent.

Adhesive	Application point	Recommended materials	Item number	Alternative
Adhesive	Windshield, rear window glass, rear quarter glass, rear gate glass and body	Dow Automotive's adhesive: ESSEX U-400HV or the equivalent Glass primer: U-401 and U-402 Paint surface primer: U-413	—	—
	Rearview mirror base	REPAIR KIT IN MR	65029FC000	—

9. SEAL MATERIAL

Use the seal material shown in the table below, or equivalent.

Seal material	Application point	Recommended materials	Item number	Alternative
Seal material	• MT transmission case • Converter case • CVT converter case • CVT transmission case • CVT intermediate case • CVT converter cover • CVT chain cover	THREE BOND 1215	004403007	DOW CORNING No. 7038
	Transmission oil pan (AT and CVT model)	THREE BOND 1217B	K0877YA020	—
	• Cylinder block • Camshaft cap • Oil pump (Except for 3.6 L model) • Rocker cover (3.6 L model or turbo model) • Oil pan (block lower) (except 3.6 L model) • Oil pan (oil pan upper) (3.6 L model) • Block lower (block) (except 3.6 L model) • Block (oil pan upper) (3.6 L model) • Back chain cover (front chain cover, block, head, oil pan upper) (3.6 L model) • Separator cover (except for 3.6 L model) • Scavenge pump (turbo model)	THREE BOND 1217G	K0877Y0100	—
	• Engine oil pressure switch • Rear differential lock nut (companion flange) • Rear differential driven gear mounting bolt threaded portion • Engine oil separator cover threaded portion (when reusing bolts) • Engine oil pump mounting bolt threaded portion (when reusing the bolt) (when reusing bolts) • Timing belt guide cam sprocket side mounting bolt threaded portion (when reusing the bolt) (when reusing bolts)	THREE BOND 1324	004403042	—
Seal material	• Rear differential • PCV valve (except 3.6L model) • Service hole plug • Intake manifold nipple	THREE BOND 1105	004403010	DOW CORNING No. 7038
	Steering adjusting screw	SEAL END No. 22	—	—
	PCV valve (3.6L model)	THREE BOND 1141G	—	—
	• Front sealing cover (door) • Rear sealing cover (door)	3M Butyl Rubber 8626	—	—
	Rear differential (side retainer bolt)	THREE BOND 1110B	K0879Y0020	—

PRE-DELIVERY INSPECTION

PI

Page
1. Pre-delivery Inspection 2

1. Pre-delivery Inspection

A: GENERAL DESCRIPTION

The purposes of the pre-delivery inspection (PDI) are as follows.
- Remove the additional parts used for ensuring the vehicle quality during transportation and restore the vehicle to its normal condition.
- Check the vehicle before delivery is in normal condition.
- Check the vehicle has no damage and no vehicle protective parts are missing while shipped or stored in a car barn.
- Make sure to deliver a complete vehicle to customer.

For above reasons, all SOA service center must carry out the PDIs before delivery of vehicle.
Besides, all SOA service center and PDI center check the condition of all vehicles to make sure to take responsibility.

B: PRE-DELIVERY INSPECTION (PDI) PROCEDURE

Static Checks Just After Vehicle Receipt

Procedure	Check point
1. Appearance	1. If the vehicle is covered with protective coating, visually check the vehicle body for damage and dents. If the protective coating has been removed, visually inspect the body paints for small areas of damage or rust. 2. Visually check the glass and light lenses for any damage, cracks or excessive gaps between body sheet metal. 3. Visually check the plated parts for any damage. 4. Check the instrument panel, console, and trims for stains or dirt.
2. Tire	1. Check the tires for damage, defective, and dents on wheels. 2. Check the tire air pressure.
3. Fuse	If the vehicle is about to be delivered to customer, attach a back-up fuse.
4. Lock/unlock and open/close operation of doors.	1. Using the key, check the door can be locked or unlocked normally. 2. Open and close all doors to check that there are no defective. 3. Operate the power door lock switch to check that all doors and the rear gate lock and unlock normally.
5. Child safety lock system	Check the child safety lock system operates normally.
6. Trunk lid open/close	1. Press the trunk opener switch for approx. one second to check for normal operation of the trunk lid. 2. Check that main and sub keys can lock/unlock the release lever, and that valet key can not lock/unlock the release lever. 3. Open and close the trunk lid to see that there are no abnormal conditions.
7. Trunk lid release lever	Operate the trunk lid release lever to check that the trunk lock is unlocked normally.
8. Lock/unlock and open/close operations of rear gate	1. Open and close the rear gate to see that there are no problems. 2. Check if the rear gate can be unlocked normally through the emergency hole. 3. Operate the power door lock switch to check that all doors and the rear gate lock and unlock normally.
9. Fuel lid opener lever	Operate the fuel lid opener to check that the fuel lid is unlocked normally.
10. Accessories	Check that the following accessories are provided. • Owner's manual • Warranty booklet • Maintenance note • Spare key • Key number plate • Jack • Tool set • Spare tire • Towing hook (Eye bolt) • Security ID plate

Procedure	Check point
11. Front hood lock release system	Operate the front hood lock release lever to check that the front hood opens normally.
12. Battery	Check the battery for any abnormal conditions such as rust and trace of battery fluid leaks.
13. Brake fluid	Check the brake fluid amount.
14. Engine oil	Check the engine oil amount.
15. Transmission gear oil	Check that the transmission gear oil level is normal.
16. CVT front differential gear oil	Check for no leakage of CVT front differential gear oil.
17. Engine coolant	Check the engine coolant amount.
18. Clutch fluid	Check the clutch fluid amount.
19. Window washer fluid	Check the window washer fluid amount.
20. Front hood latch	Check that the front hood is closed and locked normally.
21. Keyless entry system	Check that the keyless entry system operates normally.
22. Security system (Alarm system)	Check that the security system (alarm system) operates normally.
23. Seat	1. Check the seat surfaces for stains or dirt. 2. Check the seat installation conditions and functionality. 3. Check that the occupant detection system for passenger's seat operates normally.
24. Seat belt	1. Check the seat belt installation conditions and functionality. 2. Check the seat belt warning system operates normally.
25: TPMS (U.S. models)	1. Turn the transmitter power of TPMS to ON. 2. When the display of the TPMS warning light does not operate normally, perform the diagnosis while referring to TPMS(diag).

Checks with the Engine Running

Procedure	Check point
26. Immobilizer system	1. Check that the engine starts with all keys that are equipped on vehicle. 2. 60 seconds after turning ignition switch from ON to ACC or OFF, or immediately after removing the key, check that the security indicator light is blinking.
27. Starting condition	Start the engine and check that the engine starts smoothly.
28. Exhaust system	Check that the exhaust noise is normal and no leaks are found.
29. Indicator and warning lights	Check that all indicator lights and warning lights operate normally.
30. Heater & ventilation	Check that the heater & ventilation system operates normally.
31. Air conditioner	Check that the air conditioner operates normally.
32. Clock	1. Check that the clock operates normally. 2. Check for normal switch operation of fuel economy display.
33. Audio	1. Check that the audio system operates normally. 2. Check that the radio, CD and AUX systems operate normally.
34. Navigation system	1. Check all display functions for normal operation. 2. Check that the navigation, audio and AUX systems operate normally. 3. Check that the rearview camera operates normally.
35. Accessory power supply socket	Check that the accessory power supply socket operates normally.
36. Lighting system	Check that the lighting system operates normally.
37. Wiper deicer	Check that the wiper deicer operates normally.
38. Illumination control	Check that the illumination control operates normally.
39. Window washer	Check that the window washer system operates normally.
40. Wiper	Check that the wiper system operates normally.
41. Power window	Check that the power window operates normally.
42. Sunroof	Check that the sunroof operates normally.
43. Door Mirror	Check that the remote control mirror operates normally.
44. Parking brake	Check the parking brake for normal operations.

Dynamic Test with the Vehicle Running

Procedure	Check point
45. Brake test	Check the foot brake for normal operations.
46. AT shift control	Check that the AT shifts normally.
47. MT shift control	Check that the MT shifts normally.
48. Cruise control	Check that the cruise control system operates normally.

Checks after Dynamic Test

Procedure	Check point
49. ATF level	Check that the ATF level is correct.
50. CVTF	Check for leakage of CVTF.
51. AT front differential oil	Check for leakage of AT front differential oil.
52. Power steering fluid level	Check that the power steering fluid level is normal.
53. Fluid leakage	Check for fluid/oil leaks.
54. Water leakage	Spray the vehicle with water and check for water leaks.
55. Appearance 2	1. Remove the protective coat. (If attached) 2. Check the body paints for damage and stain. 3. Check the plated parts for damage and rust.

1. APPEARANCE

• If the vehicle is covered with protective coating, visually check the vehicle body for damage and dents.
• When the protective coating is removed, visually check the body paints for damage or stains in detail and repair as necessary.
• Visually check the windshield glass, door glasses and light lenses for any damage, cracks or excessive gaps to the body sheet metal and repair as necessary.
• Visually check the plated parts, such as the grilles and door knobs, for damage or loss of gloss and replace the parts as necessary.
• Check the instrument panel, console, and trims for stains or dirt.

2. TIRE

• Check the tires for damage, defective, and dents on wheels.
• Check and correct the tire size, spare tire and tire air pressure described on the tire air pressure label (driver's side).

3. FUSE

Right after the vehicle has arrived, 10 A backup fuse is removed to avoid run-down of the battery. Connect the backup fuse as shown in the figure. Also, delivery mode is canceled by disconnecting the backup fuse from the fuse holder.

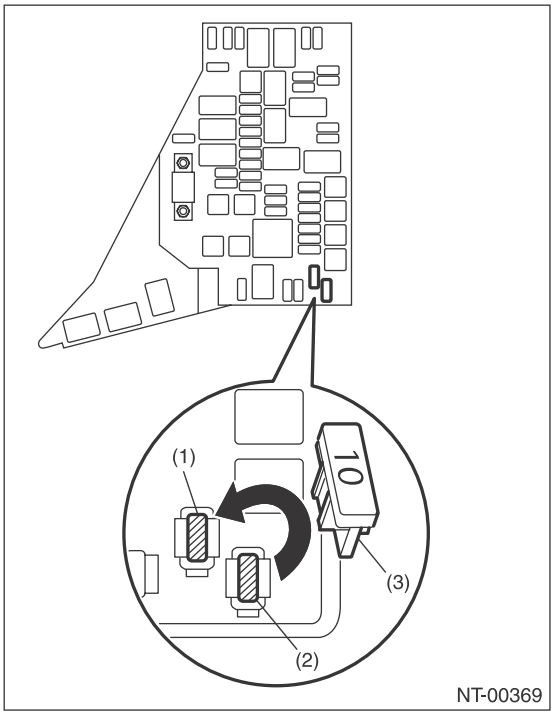

(1) Backup fuse insertion slot
(2) Backup fuse holder
(3) Backup fuse

4. LOCK/UNLOCK AND OPEN/CLOSE OPERATION CHECKS OF DOORS.

1) Using the key, lock and unlock the door several times to check for normal operation. Open and close the door several times for smooth movement.

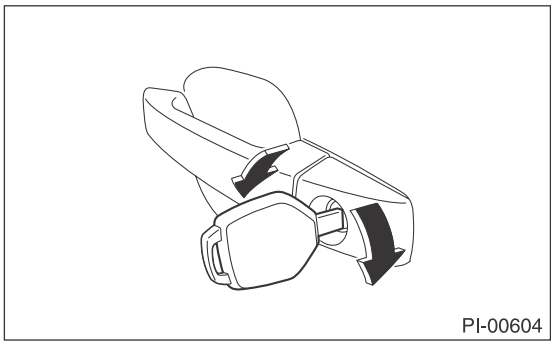

2) Completely close the driver's door, and then check the smooth movement with operating door lock knob from lock to unlock several times. Set the door lock knob (A) to lock position. Then pull the inner remote (B) to ensure that doors will not open.
For other doors, place the door lock knob (A) to lock position and then pull the inner remote (B) to ensure that doors will not open.

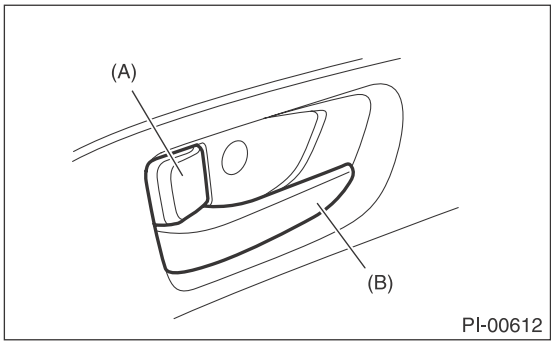

(A) Door lock knob
(B) Inner remote

3) Close all the doors, and then press the lock on power door lock switch at driver's side. Check that all doors including rear gate are locked.

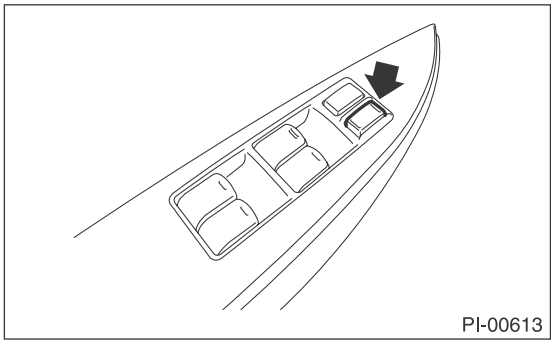

4) Press the driver's side power door lock switch to unlock side. Check that all doors including rear gate are unlocked.

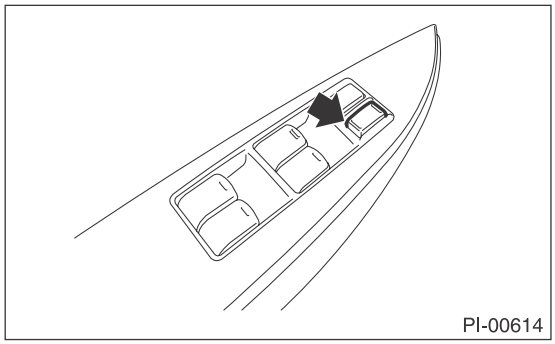

5) Check that the passenger's side power door lock switch locks and unlocks normally in the same manner.

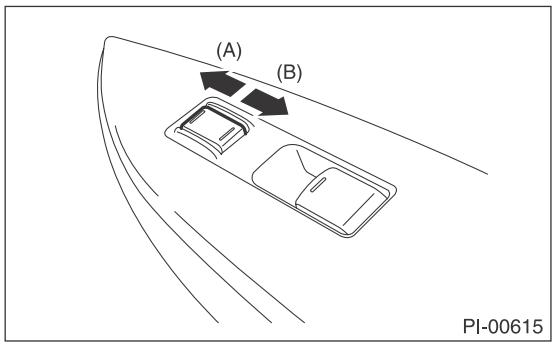

(A) Lock
(B) Unlock

6) Insert the key to ignition switch, and open the driver's side door. Press lock on power door lock. Check that the door is not locked.

5. CHILD SAFETY LOCK SYSTEM

1) Set the child safety lock on both rear doors to the lock position.
2) Close the rear doors completely.
3) Check that the lock levers of the rear doors are in the unlock position. Then, pull inner remote of rear doors to ensure that the doors will not open.

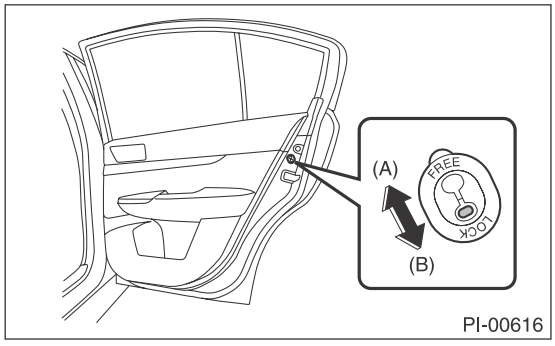

(A) Lock
(B) Unlock

4) Pull the outer handles to ensure that doors will open.

6. OPEN/CLOSE OPERATION CHECKS OF TRUNK LID

1) Press the trunk opener switch for approx. one second to check for normal operation of the trunk lid.

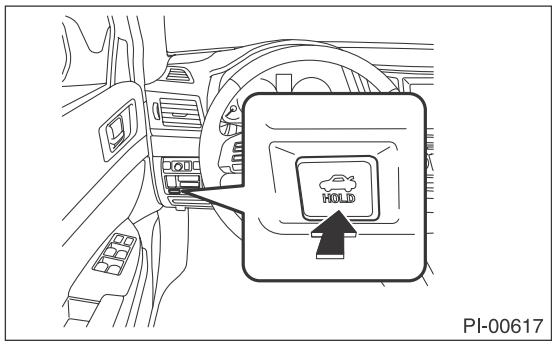

2) Open and close the trunk lid several times for smooth movement.
3) Press the trunk opener lock button in the glove box.

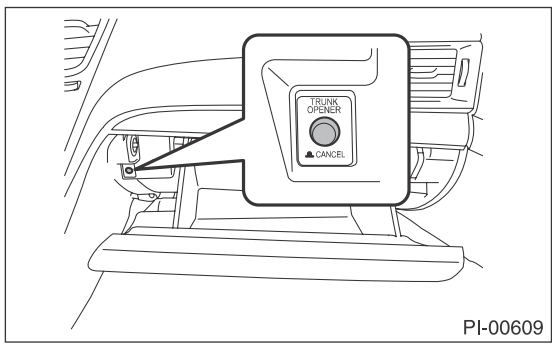

4) Check that the trunk lid will not open even when the trunk opener button is pressed.

7. TRUNK LID RELEASE HANDLE

CAUTION:
Do not check the trunk lid release handle when in the trunk. If the trunk lid release handle is defective, you may be trapped in.

1) Use a flat tip screwdriver. Slide in the screwdriver through the clearance at the lock assembly until a click sound is heard. This is the latch lock position.

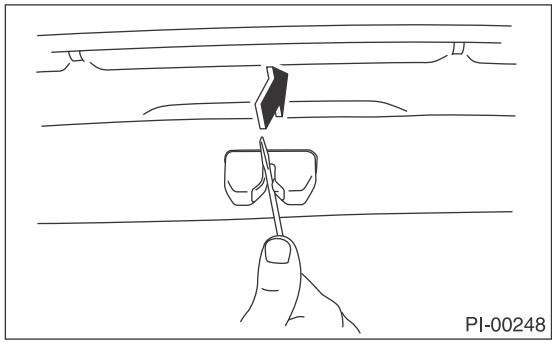

2) Make sure the latch is released by pulling the yellow trunk lid release handle in the direction of arrow.

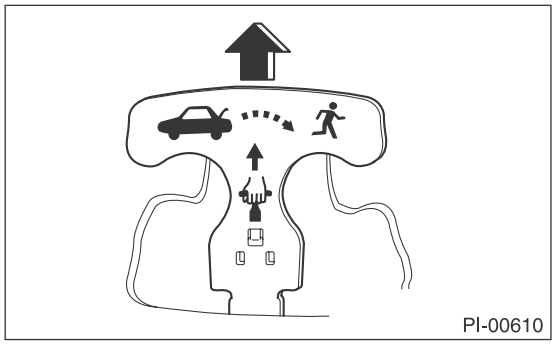

8. LOCK/UNLOCK AND OPEN/CLOSE OPERATIONS OF REAR GATE

1) Open and close the rear gate several times for smooth movement.
2) Operate the rear gate lever to check that the rear gate is locked and unlocked normally.
(1) Remove the cover inside the rear gate.

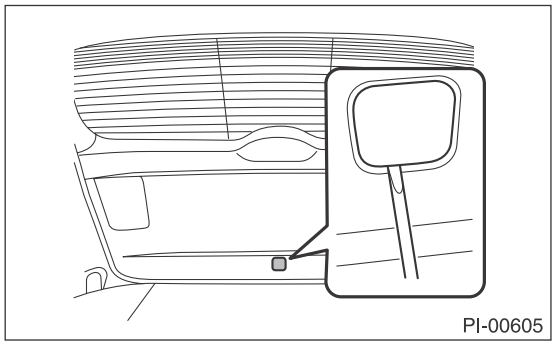

(2) Operate the lever to check that the rear gate is locked and unlocked normally.

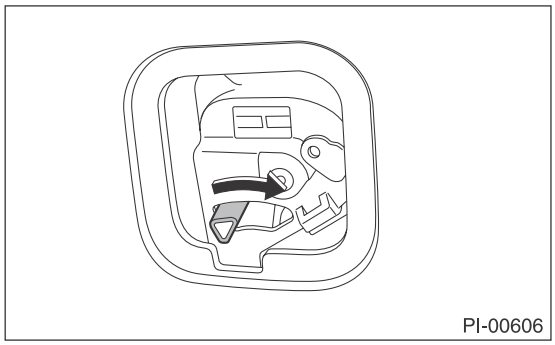

9. FUEL LID OPENER LEVER

Operate the fuel lid opener to check that the fuel lid is unlocked normally. Check that the filler cap is securely closed.

10.ACCESSORY

Check that the following accessories are provided.

- Owner's manual
- Warranty booklet
- Maintenance note
- Spare key
- Key number plate
- Jack
- Tool set
- Spare tire
- Towing hook (Eye bolt)
- Security ID plate

11.OPERATION CHECK OF FRONT HOOD LOCK RELEASE SYSTEM

Operate the front hood lock release lever (A) to check that the front hood is unlocked normally.

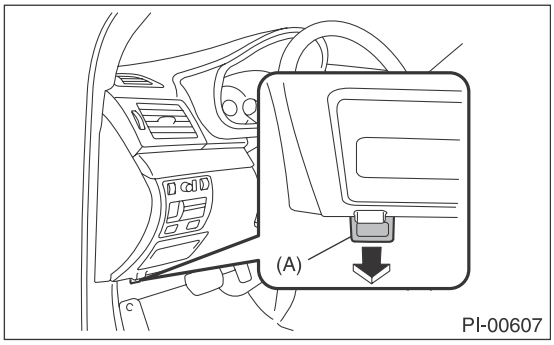

Operate the lever (B) and check that the front hood is opened normally.

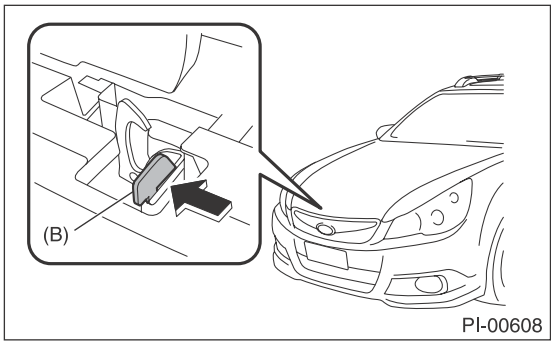

12.BATTERY

Check the battery terminals to make sure that there are no rust or corrosions due to fluid leaks.

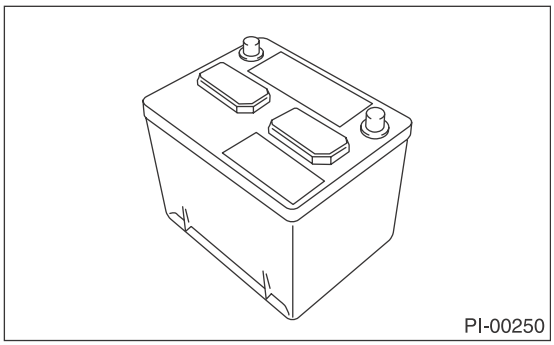

13.BRAKE FLUID

CAUTION:
If the brake fluid is spilt over exhaust pipe, wipe it off with cloth to avoid emitting smoke or causing a fire.

Check that the brake fluid level is normal. If the amount is insufficient, carry out a brake line test to identify brake fluid leaks and check the brake operation. After that, refill the brake fluid tank with the specified type of fluid.

14.ENGINE OIL

CAUTION:
If engine oil is spilt onto the exhaust pipe, wipe it off with cloth to avoid emission of smoke or causing a fire.

Check the engine oil amount. If the amount of oil is insufficient, check that no leaks are found. Then, add the necessary amount of the specified engine oil.

- 2.5 L model

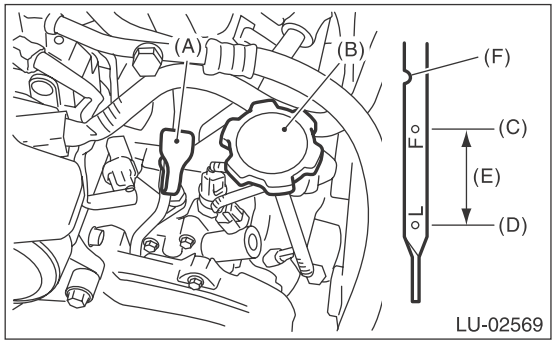

(A) Oil level gauge
(B) Engine oil filler cap
(C) "F" line
(D) "L" line
(E) Approx. 1.0 ℓ (1.1 US qt, 0.9 Imp qt)
(F) Notch mark

- 3.6 L model

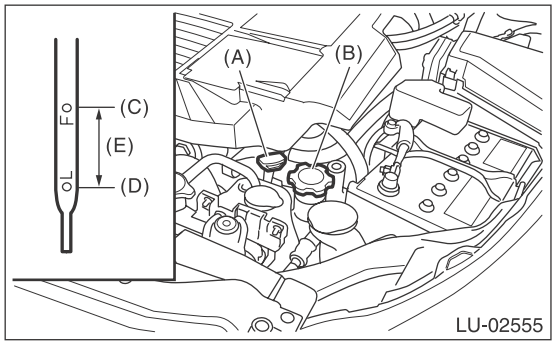

(A) Oil level gauge
(B) Engine oil filler cap
(C) "F" line
(D) "L" line
(E) Approx. 1.0 ℓ (1.1 US qt, 0.9 Imp qt)

15.TRANSMISSION GEAR OIL

CAUTION:
If transmission gear oil is spilt over the exhaust pipe, wipe it off with a cloth to avoid emitting smoke or causing a fire.
Check that the transmission gear oil level is normal. If the amount of gear oil is insufficient, check that no leaks are found. Then add the necessary amount of the specified transmission gear oil.

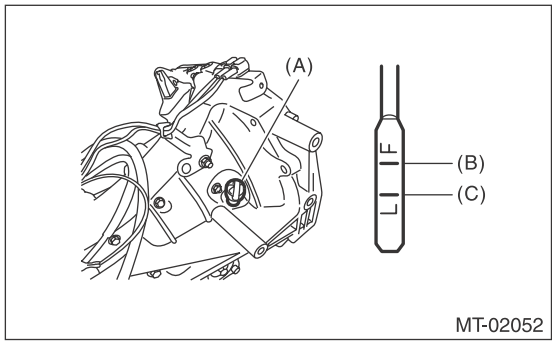

(A) Oil level gauge
(B) Upper level
(C) Lower level

16.CVT FRONT DIFFERENTIAL GEAR OIL

Check for no leakage of CVT front differential gear oil.

17.ENGINE COOLANT

CAUTION:
If the engine coolant is spilt over exhaust pipe, wipe it off with cloth to avoid emitting smoke or causing a fire.
Check that the engine coolant level on the reservoir tank is normal. If the amount of engine coolant is insufficient, check that no leaks are found. Then, add the necessary amount of coolant with the specified concentration.

18.CLUTCH FLUID

CAUTION:
If the clutch fluid is spilt over the exhaust pipe, wipe it off with cloth to avoid emitting smoke or causing a fire.
Check that the clutch fluid level is normal. If the amount of the fluid is insufficient, check that no leaks are found. Then, add the necessary amount of the specified fluid.

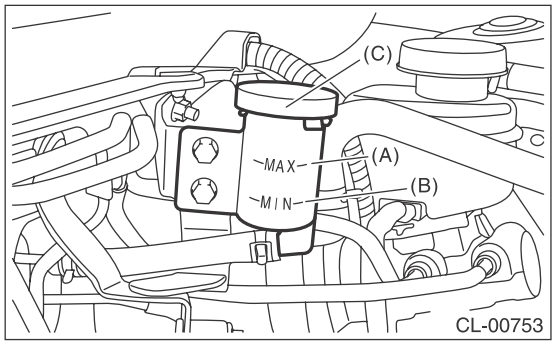

(A) MAX. level
(B) MIN. level
(C) Reservoir tank

19.WINDOW WASHER FLUID

Check that the window washer fluid level is normal. If the amount is insufficient, check that no leaks are found. Then, add the necessary amount of washer fluid.

20.FRONT HOOD LATCH

Close the front hood. Check that the front hood is securely latched.

21.KEYLESS ENTRY SYSTEM

NOTE:
The following inspections show the initial settings. When the settings are different from the initial settings, use Subaru Select Monitor to check the details of each setting for inspections. <Ref. to BC(diag)-17, OPERATION, User Customizing.>
1) Fully open all the door windows.
2) Remove the key from the ignition switch and close all the doors including rear gate.
3) Press the rear gate and trunk open button for at least one second.
• Check if the trunk is opened and the hazard light blinks twice and the buzzer sounds twice. (Sedan model)

• Check if the rear gate is unlocked and the hazard light blinks twice and the buzzer sounds twice. (OUTBACK model)

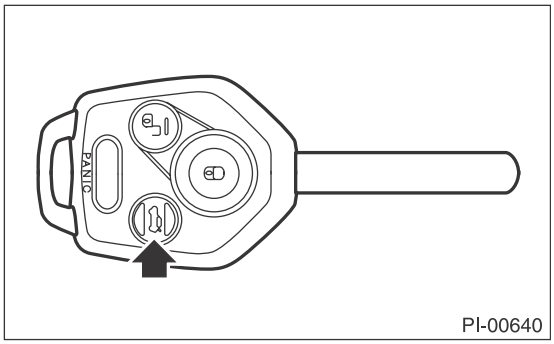

4) Press the “LOCK” button on the keyless transmitter with one of the doors (including the rear gate and trunk) opened. Check if all doors are locked, hazard light blinks five times and the buzzer sounds five times and warning shows one of the doors (including the rear gate and trunk) open.
5) Close all the doors including rear gate and trunk. Press the “LOCK” button momentarily on the keyless transmitter. Check that all the doors (including rear gate and trunk) are locked, hazard light blinks once and buzzer sounds once.

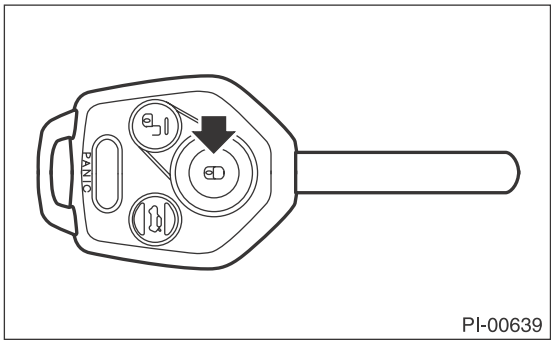

6) Press the “UNLOCK” button momentarily on the keyless transmitter. Check that the driver’s door is unlocked and hazard light blinks twice and the buzzer sounds twice.
And press the “UNLOCK” button momentarily again in 5 seconds. Check that all doors (including rear gate) are unlocked.

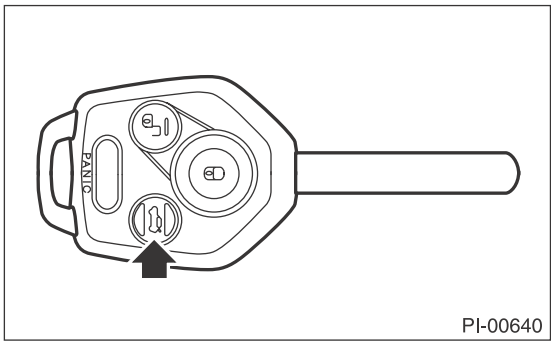

7) Within a distance of 10 m from a vehicle, press keyless transmitter’s “LOCK” button three times within five seconds. Check that the horn honks once and that the hazard light blinks three times.
8) Move the power door lock switch to the lock position with one of doors (including the rear gate) opened. Next, close all the doors including rear gate. Check if all doors are locked and buzzer sounds once and the hazard light flashes once.
9) Check buzzer operation.
The buzzer sounds when the doors are locked or unlocked. The buzzer can be turned off if desired. Turn the buzzer off or on with following procedure.
(1) Close all the doors including rear gate, then remove the key from ignition key lock.
(2) Press the power door lock switch to unlock and hold it until the operation is finished.
(3) Insert the key into ignition key lock, and insert and remove the key in ignition key lock 5 times in 10 seconds.
(4) When finished step (3), open and close the driver’s door once within 10 seconds.

NOTE:
When opening and closing of the door is not available within 10 seconds, hazard light blinks once and the change over operation is cancelled. Retry from the step (1).
(5) Hazard light blinks 3 times and the buzzer sound turns ON or OFF.
10) Press the “Panic” button of the keyless transmitter. Check if the alarm condition happens (horn sounds continuously, hazard light blinks, security indicator comes on). Check whether this condition lasts until any button on the keyless transmitter is pressed or lasts for 30 seconds.

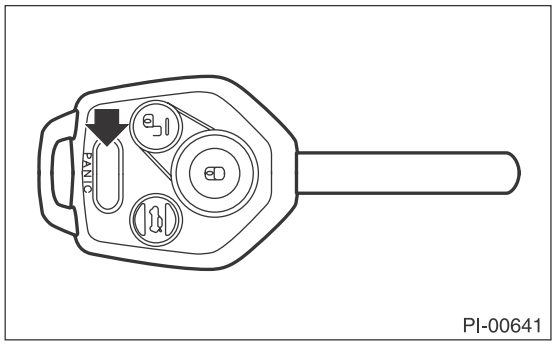

22.SECURITY SYSTEM (ALARM SYSTEM)

NOTE:
The following inspections show the initial settings. When the settings are different from the initial settings, use Subaru Select Monitor to check the details of each setting for inspections. <Ref. to BC(diag)-17, OPERATION, User Customizing.>
1) Fully open all the door windows.

2) Remove the key from the ignition switch and close all the doors including rear gate.
3) Press the “LOCK” button momentarily on the keyless transmitter. All doors are locked, and buzzer sounds once, hazard blinks once, security indicator light blinks faster (five times per two seconds) for 30 seconds and goes slower (twice per two seconds), then the alarm system is in set condition.

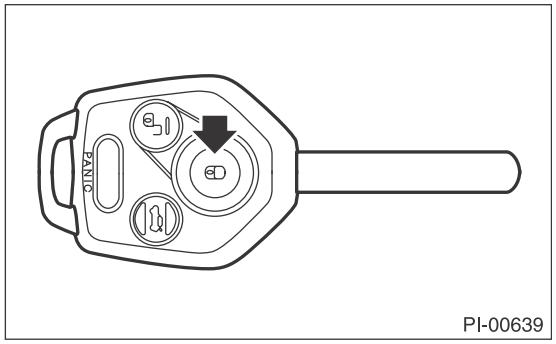

4) Press the “UNLOCK” button momentarily on the keyless transmitter. When the door of the driver’s seat is unlocked, the buzzer sounds twice, the hazard light flashes twice, the room light turns on and the security indicator light flashes once in three seconds, and the alarm system enters the release mode.

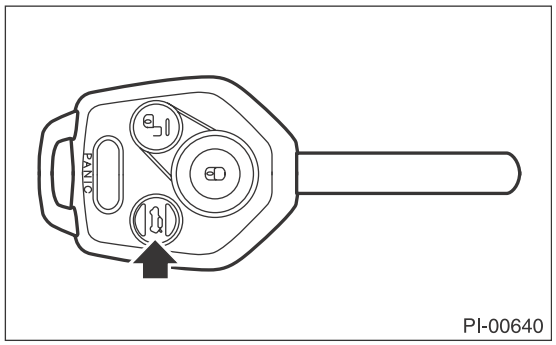

5) Close all the doors including rear gate. Press the “LOCK” button momentarily on the keyless transmitter. When all the doors are locked, buzzer sounds once, hazard blinks once and the alarm system is in set condition in 30 seconds.
6) Unlock a door using the inner lock knob and open the door while the security system is in the set mode. Check if the alarm condition happens (horn sounds continuously, hazard light blinks, security indicator illuminates). Check if this condition lasts for a maximum of three minutes or until the “UNLOCK” button of the keyless transmitter is pressed.

NOTE:
The alarm condition will cease in 30 seconds once the door is closed.
7) When none of above is applicable, perform troubleshooting for the security system.

23.SEAT

1) Check the seat surfaces for stains or dirt.
2) Check that each seat functions properly in sliding and reclining. Check that the seat position memory for driver’s power seat function properly. Check all available functions of the rear seat such as a trunk-through center armrest.
3) Check the passenger’s seat occupant detection system.
(1) Turn the ignition switch to ON.
(2) Check the ON and OFF of passenger’s airbag indicator light come on simultaneously for about 6 seconds and go off for 2 seconds, and then only OFF illuminates again.

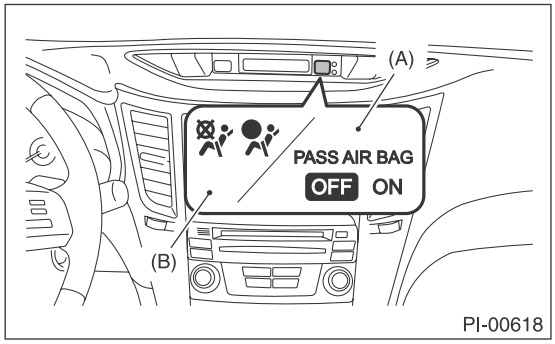

(A) Indication for US
(B) Indication for Canada

(3) Have a person weighing approximately 70 kg (155 lb) or more sit in the passenger’s seat, and check whether the passenger’s airbag indicator light illuminate or not.
(4) Empty the passenger seat, then check whether the passenger side airbag indicator light OFF illuminates.

24.SEAT BELT

1) Check installation condition of seat belt.
2) Pull out the seat belt and then release it. Check that the belt retracts smoothly.
3) Check that the ALR seat belt operates normally.
4) CHECK SEAT BELT WARNING FUNCTION.
(1) Turn the ignition switch to ON with the driver’s and passenger’s seat belt detached.
(2) Check the driver’s and passenger’s seat belt warning light blink for approx. 6 seconds and the buzzer sounds intermittently.
(3) Then, check the seat belt warning light illuminates and blinks repeatedly at a cycle of approx. 15 seconds. (If no passenger is on the passenger’s seat, the seat belt warning light on passenger’s seat does not operate.)

25.TPMS

1) Turn the ignition switch to ON, and check TPMS warning light for normal operation.
- Normal operation (IG ON (light check))

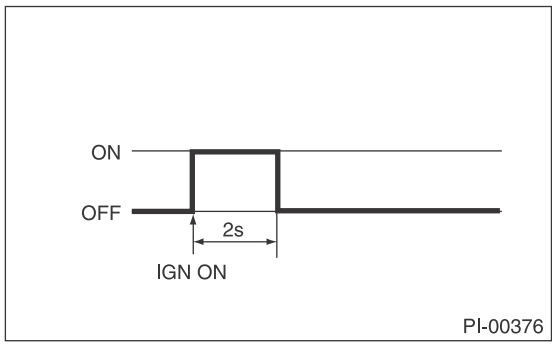

2) If the TPMS warning light display does not operate normally, check and repair the system. <Ref. to TPM(diag)-2, Basic Diagnostic Procedure.>

26.IMMOBILIZER SYSTEM

1) Check that the engine starts with all keys that are equipped on vehicle.
2) 60 seconds after turning ignition switch from ON to ACC or OFF, or immediately after removing the key, check that the security indicator light is blinking.
3) For the model for Canada, execute Each System Check > Integ. unit mode > "SCU collation mode" on SSMIII to check [Collation OK (no error)] is displayed.

NOTE:
If malfunctions occur, refer to "IMMOBILIZER (DIAGNOSIS)".

27.STARTING CONDITION

Start the engine and check that the engine starts smoothly. If the battery voltage is low, recharge or replace the battery. If any noises are observed, immediately stop the engine and check and repair the abnormal components.

28.EXHAUST SYSTEM

Listen to the exhaust noise to see if no exhaust gas leak or abnormal noises are observed.

29.INDICATOR LIGHT AND WARNING LIGHT

Check that all indicator lights and warning lights operate normally.

30.HEATER & VENTILATION

Operate the heater & ventilation system to check for normal airflow outlet control, air inlet control, airflow capacity and heating performance.

31.AIR CONDITIONER

Operate the air conditioner. Check that the A/C compressor operates normally and enough cooling is provided.

NOTE:
To prevent the insufficient lubrication of the air conditioner, operate the air conditioner for five minutes at idling.

32.CLOCK

Check the clock for normal operations and enough accuracy. Check the fuel economy display switches by operating the knob on the meter. Also check there is no significant error on the outside temperature display.

33.AUDIO

Check that all radio functions operate, the speakers emit sound properly and the noise is at an acceptable level. Also check the CD unit and AUX unit operations.

34.NAVIGATION SYSTEM

1) Check all display functions for normal operation. (Refer to the owner's manual for the operation procedures.)
2) Check the map disc (DVD) are provided on vehicle.
3) Check that the navigation system operates normally.
4) Check that the rearview camera operates normally.

35.ACCESSORY POWER SUPPLY SOCKET

1) Check the operation of the front accessory power supply socket.
2) Check operation of the accessory power supply socket in console box.

36.LIGHTING SYSTEM

1) Check the headlight operation.
2) Check the stop light operation.
3) Check other lights for normal operations.

37.WIPER DEICER

Check that the wiper deicer operates normally.

38.ILLUMINATION CONTROL

Check that the illumination control operates normally.

39.WINDOW WASHER

Check that the window washer system injects washer fluid to the specified area of the windshield and rear window glass shown in the figure.

Front injection position:

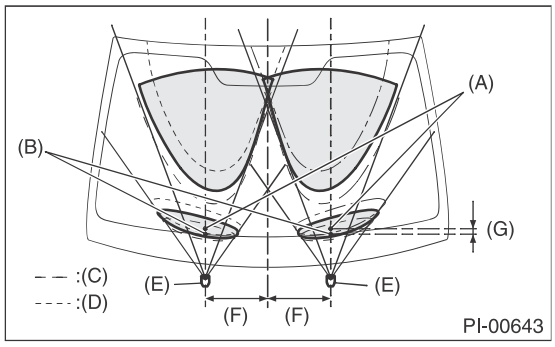

(A) Hitting point center
(B) Lower-side spray position center
(C) Washer fluid elevation angle/dispersal angle lower limit
(D) Washer fluid elevation angle/dispersal angle upper limit
(E) Upper spray nozzle center of washer nozzle
(F) 250 mm (9.84 in)
(G) 23 mm (0.91 in)

Rear injection position:

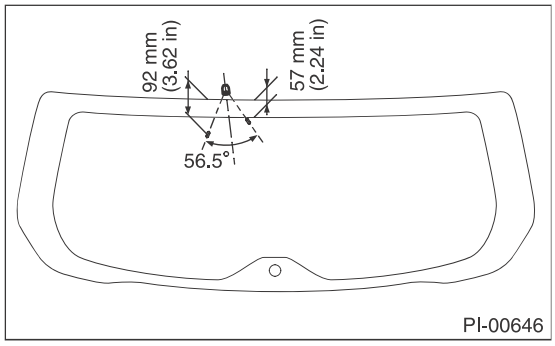

40.WIPER

Check the front and rear wipers for normal operations.

41.POWER WINDOW

• Operate the power window switches one by one to check that each of the power windows goes up and down without noises.
• Check AUTO UP/AUTO DOWN operate properly by operating the power window switch on driver's seat side.

CAUTION:
If battery has been removed, AUTO UP does not operate properly because initialized. In this case, perform the initial setting (reset A) and check AUTO UP operates properly.

42.SUNROOF

Check that the sunroof operates normally.

43.DOOR MIRROR

Check that the remote control mirror operates normally.

44.PARKING BRAKE

Check the parking brake operates properly by depressing brake pedal and pressing the electronic parking brake switch.

45.BRAKE TEST

Check the foot brake for normal operations.

46.AT SHIFT CONTROL

1) Turn the ignition switch to ON.
2) While brake pedal is not depressed, check if the select lever does not move from "P" range.
3) While brake pedal is depressed, check if the select lever moves from "P" range.
4) Set the select lever to other than "P" range.
5) When the ignition switch is turned to OFF, check if the ignition key switch cannot be removed.
6) Set the selector lever to "D" range and check the shifting while driving the vehicle.

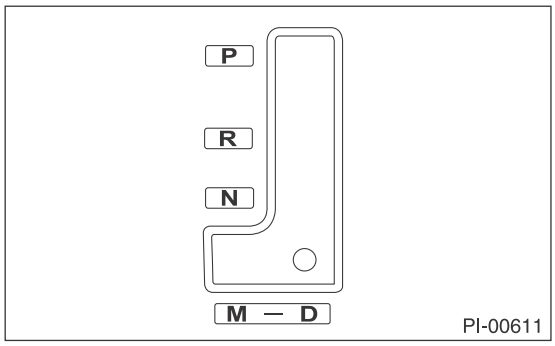

47.MT SHIFT CONTROL

1) Check for smooth operation to each position. Especially, shifting to 5th ←→ 6th, and then to Rev, check for any drag.
2) Check the slider returns to the original position by shifting to the Rev and then back in neutral while pulling up the slider.

3) If the shift operation is not smooth, readjust the exposed length (a) of the MT gear select cable referring to the figure below.

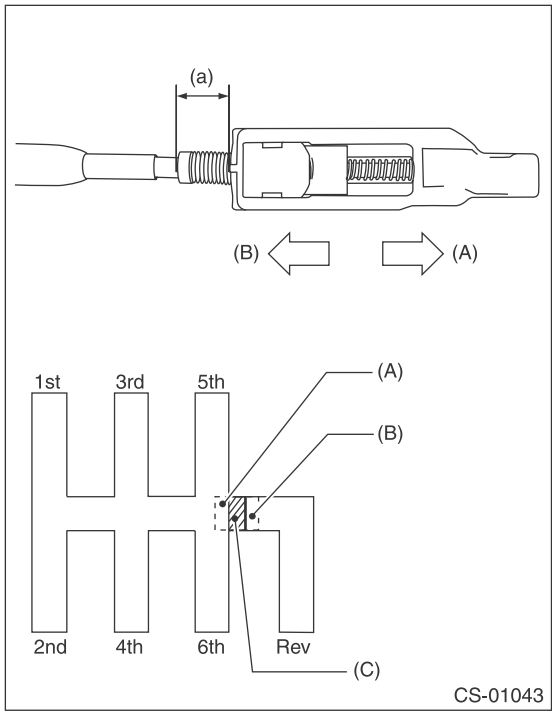

(a) Exposed length of MT gear select cable
(A) Extending exposed length of gear select cable
(B) Shrinking exposed length of gear select cable
(C) Reference for exposed length (a)

• If 5th or 6th gear cannot be selected when cable is pressed to reverse lock bracket:
→ Extend the exposed length (a) of MT gear select cable.
• If select lever does not move along the cranking line when it is operated from 4th to 5th gear:
→ Shorten the exposed length (a) of MT gear select cable.

48.CRUISE CONTROL

Operate the cruise control system. Check that the system is activated and deactivated correctly.

49.ATF LEVEL

CAUTION:
If the ATF is spilt over exhaust pipe, wipe it off with cloth to avoid emitting smoke or causing a fire.
After selecting all positions (P, R, N, D), set the select lever in "P" range. Idle the engine for 1 or 2 minutes, and measure the ATF level. If the amount is insufficient, check that no leaks are found. Then, add the necessary amount of the specified ATF.

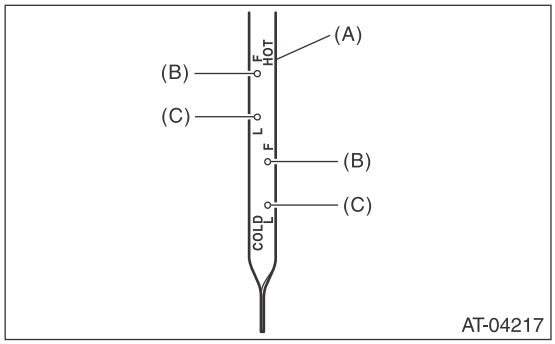

(A) Level gauge
(B) Upper level
(C) Lower level

50.CVTF

Check for leakage of CVTF.

51.AT FRONT DIFFERENTIAL OIL

Check for leakage of AT front differential oil.

52.POWER STEERING FLUID LEVEL

CAUTION:
If any power steering fluid is spilt over the exhaust pipe, wipe it off with a cloth to avoid emitting smoke or causing a fire.
Check that the power steering fluid level is normal. If the amount is insufficient, check that no leaks are found. Then add the necessary amount of the specified power steering fluid.

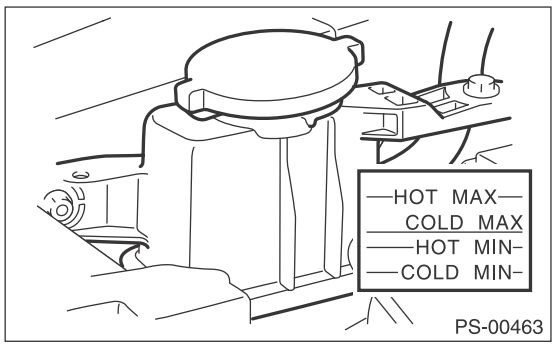

53.OIL LEAKAGE

Check entire areas of the vehicle for any trace of coolant/oil/fluid leaks.

54.WATER LEAK TEST

Spray the vehicle with water using a hose and check that no water enters the passenger compartment.

• Before performing the water leakage test, remove anything that may obstruct the operation or which must be kept dry.

• Close all the windows and doors securely. Close the hood and trunk lid before starting the test.

• Spray the vehicle with water using a hose. The rate of water spray must be approx. 20 to 25 ℓ (5.3 — 6.6 US gal, 4.4 — 5.5 Imp gal) per minute.

When spraying water on areas adjacent to the floor and wheel house, increase the pressure. When spraying water on areas other than the floor and wheel house, decrease the pressure. But the force of water must be made strong occasionally by pressing the end of the hose.

NOTE:
Be sure to keep the hose at least 10 cm (3.9 in) away from vehicle.

Check the following areas.

• Front window and body framework mating portion
• Door mating portions
• Glass mating portions
• Rear quarter window mating portions
• Rear window and body framework mating portion
• Around roof drips

If any dampness in the compartments is discovered after the water has been applied, carefully check all the areas that may have possibly contributed to the leak.

55.APPEARANCE CHECK 2

1) When vehicle body is covered with protective film (wrap guard), peel it off.

NOTE:

• It is easier to remove the wrap guard using steam.

• For a vehicle left for a long time or at low temperature, sprinkle some water heated to 50 — 60°C (122 — 140°F) over the vehicle to raise its surface temperature before peeling off the wrap guard. Do not use the water heated to over 60°C (140°F).

• If the adhesive remains exist on the coated surface, soak a flannel rag, etc. with a small amount of coating wax or solvent such as oil benzene and IPA, put the soaked cloth on the remains lightly, and then wipe them off with a flannel rag etc.

• Keep solvent from touching the resin or rubber parts. Do not use coating wax or solvent while the component surface temperature is high due to hot weather etc.

• If the coated surface is swollen out due to seams or moisture, expose the vehicle to the sunlight for a few hours or heat the seam and swollen portions using a dryer etc.

• Dispose of the peeled wrap guard as burnable industrial garbage.

• If a yellow label is attached to the fog light lens, remove it.

2) Check the whole vehicle body for flaking paint, damage by transportation, corrosion, dirt, cracks or blisters.

NOTE:

• It is better to determine an inspection pattern in order to avoid missing an area, since the total inspection area is wide.

• Do not repair the body paint unless absolutely necessary. Also, if the vehicle is in need of repair to remove scratches or corroded paint, the repair area must be limited to the minimum. Re-painting and spray painting must be avoided as much as possible.

3) Check each window glass for scratches carefully. Slight damage may be removed by polishing with cerium oxide. (Fill a cup half with cerium oxide, and add warm water to it. Then agitate the content until it turns to wax. Apply this wax to a soft cloth, and polish the glass with it.)

4) Check each portion of the vehicle body and underside components for the formation of rust. If rust is discovered, remove it with sandpaper of #80 to #180 and treat the surface with rust preventive. After this treatment is completed, flush the portion thoroughly, and prepare the surface for repair painting.

5) Check each portion of body and all of the exterior parts for deformation or distortion. Also, check each light lens for cracks.

6) Peel the protective tape, vinyl wrapping and identification seal attached to the following places.

• Seat
• Door trim
• Floor carpet
• Side sill
• Front hood lock release lever
• Edge rear
• Rear wiper
• Sedan rear combination light (Trunk lid opening portion)
• Roof rail
• Assist rail

PERIODIC MAINTENANCE SERVICES

PM

		Page
1.	General Description	2
2.	Schedule	3
3.	Engine Oil	9
4.	Engine Oil Filter	10
5.	Spark Plug	11
6.	V-belt	12
7.	Timing Belt	13
8.	Fuel Line	15
9.	Fuel Filter	16
10.	Air Cleaner Element	17
11.	Cooling System	18
12.	Engine Coolant	19
13.	Clutch System	20
14.	Transmission Gear Oil	21
15.	Automatic Transmission Fluid	22
16.	CVTF	23
17.	Front & Rear Differential Gear Oil	24
18.	Brake Line	25
19.	Brake Fluid	26
20.	Disc Brake Pad and Disc	27
21.	Brake Lining and Drum	28
22.	Suspension	29
23.	Wheel Bearing	32
24.	Axle Boots & Joints	33
25.	Tire Rotation	34
26.	Steering System (Power Steering)	35
27.	A/C Filter	37

1. General Description

A: GENERAL DESCRIPTION

Be sure to perform periodic maintenance in order to maintain vehicle performance and find problems before they occur.

2. Schedule

A: MAINTENANCE SCHEDULE 1

1. U.S.

- Other than U5 model

			Maintenance interval [Number of months or km (miles), whichever occurs first]																	
	Months		3	7.5	15	22.5	30	37.5	45	52.5	60	67.5	75	82.5	90	97.5	105	112.5	120	Remarks
	× 1,000 km		4.8	12	24	36	48	60	72	81.4	96	108	120	132	144	156	168	180	192	
	× 1,000 miles		3	7.5	15	22.5	30	37.5	45	52.5	60	67.5	75	82.5	90	97.5	105	112.5	120	
1	Engine oil	3.6 L	R	R	R	R	R	R	R	R	R	R	R	R	R	R	R	R	R	
		2.5 L		R	R	R	R	R	R	R	R	R	R	R	R	R	R	R	R	Turbo model Note 6.
2	Engine oil filter	3.6 L	R	R	R	R	R	R	R	R	R	R	R	R	R	R	R	R	R	
		2.5 L		R	R	R	R	R	R	R	R	R	R	R	R	R	R	R	R	Turbo model Note 6.
3	Spark plug										R								R	
4	Drive belt(s)						I				I				I		R			
5	Camshaft drive belt						I				I				I		R			
6	Fuel line						(I)				(I)				(I)				I	Note 1.
7	Air cleaner element						R				R				R				R	Note 2.
8	Cooling system						I				I				I				I	
9	Engine coolant		Replace after the first 11 years or 220,000 km (137,500 miles), and every six years or 120,000 km (75,000 miles) thereafter																	
10	Clutch system				I		I		I		I		I		I		I		I	
11	Transmission oil						I				I				I				I	
12	ATF and CVTF						I				I				I				I	Note 3.
13	Front and rear differential oil						I				I				I				I	
14	Brake line				I		I		I		I		I		I		I		I	
15	Brake fluid						R				R				R				R	
16	Disc brake pad and disc				I		I		I		I		I		I		I		I	
17	Parking brake				I		I		I		I		I		I		I		I	
18	Suspension				I		I		I		I		I		I		I		I	
19	Wheel bearing										(I)								(I)	
20	Axle boots and joints				I		I		I		I		I		I		I		I	
21	Tire rotation			I	I	I	I	I	I	I	I	I	I	I	I	I	I	I	I	Note 4.
22	Steering system (Power steering)				I		I		I		I		I		I		I		I	
23	A/C filter		Replace every 12 months or 15,000 km (9,300 miles).																	Note 5.

Symbols used:
R: Replace
I: Inspection
(R) or (I): Recommended service for safe vehicle operation.

PERIODIC MAINTENANCE SERVICES

NOTE:

1. This inspection is not required to maintain emission warranty eligibility and it does not affect the manufacturer's obligations under EPA.
2. When the vehicle is used in extremely dusty conditions, the air cleaner element should be replaced more often.
3. When CVTF is used under severe condition, to replace every 40,000 km (24,855 miles) is recommended.
4. A tire should be replaced when the tread wear indicator appears as a solid band across the tread. The indicator appears when the remaining amount of tread is less than 1.6 mm (0.063 in).
5. When the A/C filter is installed.
6. For 2.5L turbo model, replace every 3.75 months or 6,000 km (3,750 miles).

- U5 model

			Maintenance interval [Number of months or km (miles), whichever occurs first]												
	Months		3	7.5	15	22.5	30	37.5	45	52.5	60	67.5	75	To be continued to the next table.	Remarks
	× 1,000 km		4.8	12	24	36	48	60	72	81.4	96	108	120		
	× 1,000 miles		3	7.5	15	22.5	30	37.5	45	52.5	60	67.5	75		
1	Engine oil	3.6 L	R	R	R	R	R	R	R	R	R	R	R		
		2.5 L		R	R	R	R	R	R	R	R	R	R		
2	Engine oil filter	3.6 L	R	R	R	R	R	R	R	R	R	R	R		
		2.5 L		R	R	R	R	R	R	R	R	R	R		
3	Spark plug										R				
4	Drive belt(s)						I				I				
5	Camshaft drive belt						I				I				
6	Fuel line						(I)				(I)				Note 1.
7	Air cleaner element						R				R				Note 2.
8	Cooling system						I				I				
9	Engine coolant		Replace after the first 11 years or 220,000 km (137,500 miles), and every six years or 120,000 km (75,000 miles) thereafter												
10	Clutch system				I		I		I		I		I		
11	Transmission oil						I				I				
12	ATF and CVTF						I				I				Note 3.
13	Front and rear differential oil						I				I				
14	Brake line				I		I		I		I		I		
15	Brake fluid						R				R				
16	Disc brake pad and disc				I		I		I		I		I		
17	Parking brake				I		I		I		I		I		
18	Suspension				I		I		I		I		I		
19	Wheel bearing										(I)				
20	Axle boots and joints				I		I		I		I		I		
21	Tire rotation			I	I	I	I	I	I	I	I	I	I		Note 4.
22	Steering system (Power steering)				I		I		I		I		I		
23	A/C filter		Replace every 12 months or 15,000 km (9,300 miles).												Note 5.

Symbols used:
R: Replace
I: Inspection
(R) or (I): Recommended service for safe vehicle operation.

NOTE:
1. This inspection is not required to maintain emission warranty eligibility and it does not affect the manufacturer's obligations under EPA.
2. When the vehicle is used in extremely dusty conditions, the air cleaner element should be replaced more often.
3. When CVTF is used under severe condition, to replace every 40,000 km (24,855 miles) is recommended.
4. A tire should be replaced when the tread wear indicator appears as a solid band across the tread. The indicator appears when the remaining amount of tread is less than 1.6 mm (0.063 in).
5. When the A/C filter is installed.

PERIODIC MAINTENANCE SERVICES

		Maintenance interval [Number of months or km (miles), whichever occurs first]											
	Months	Continued from previous table	82.5	90	97.5	105	112.5	120	127.5	135	142.5	150	Remarks
	× 1,000 km		132	144	156	168	180	192	204	216	228	240	
	× 1,000 miles		82.5	90	97.5	105	112.5	120	127.5	135	142.5	150	
1	Engine oil		R	R	R	R	R	R	R	R	R	R	
2	Engine oil filter		R	R	R	R	R	R	R	R	R	R	
3	Spark plug							R					
4	Drive belt(s)			I		R				I			
5	Camshaft drive belt			I		R				I			
6	Fuel line			(I)				I				(I)	Note 1.
7	Air cleaner element			R				R				R	Note 2.
8	Cooling system			I				I				I	
9	Engine coolant	Replace after the first 11 years or 220,000 km (137,500 miles), and every six years or 120,000 km (75,000 miles) thereafter											
10	Clutch system			I		I		I				I	
11	Transmission oil			I				I				I	
12	ATF and CVTF			I				I				I	Note 3.
13	Front and rear differential oil			I				I				I	
14	Brake line			I		I		I		I		I	
15	Brake fluid			R				R				R	
16	Disc brake pad and disc			I		I		I		I		I	
17	Parking brake			I		I		I		I		I	
18	Suspension			I		I		I		I		I	
19	Wheel bearing							(I)				(I)	
20	Axle boots and joints			I		I		I		I		I	
21	Tire rotation		I	I	I	I	I	I	I	I	I	I	Note 4.
22	Steering system (Power steering)			I		I		I		I		I	
23	A/C filter	Replace every 12 months or 15,000 km (9,300 miles).											Note 5.

Symbols used:
R: Replace
I: Inspection
(R) or (I): Recommended service for safe vehicle operation.

NOTE:
1. This inspection is not required to maintain emission warranty eligibility and it does not affect the manufacturer's obligations under EPA.
2. When the vehicle is used in extremely dusty conditions, the air cleaner element should be replaced more often.
3. When CVTF is used under severe condition, to replace every 40,000 km (24,855 miles) is recommended.
4. A tire should be replaced when the tread wear indicator appears as a solid band across the tread. The indicator appears when the remaining amount of tread is less than 1.6 mm (0.063 in).
5. When the A/C filter is installed.

2. CANADA

			Maintenance interval [Number of months or km (miles), whichever occurs first]																	
	Months		3	7.5	15	22.5	30	37.5	45	52.5	60	67.5	75	82.5	90	97.5	105	112.5	120	Remarks
	× 1,000 km		4.8	12	24	36	48	60	72	81.4	96	108	120	132	144	156	168	180	192	
	× 1,000 miles		3	7.5	15	22.5	30	37.5	45	52.5	60	67.5	75	82.5	90	97.5	105	112.5	120	
1	Engine oil	3.6 L	R	R	R	R	R	R	R	R	R	R	R	R	R	R	R	R	R	
		2.5 L	R	R	R	R	R	R	R	R	R	R	R	R	R	R	R	R	R	
2	Engine oil filter	3.6 L	R	R	R	R	R	R	R	R	R	R	R	R	R	R	R	R	R	
		2.5 L	R	R	R	R	R	R	R	R	R	R	R	R	R	R	R	R	R	
3	Spark plug										R								R	
4	Drive belt(s)						I				I				I		R			
5	Camshaft drive belt						I				I				I		R			
6	Fuel line						(I)				(I)				(I)				I	Note 1.
7	Air cleaner element						R				R				R				R	Note 2.
8	Cooling system						I				I				I				I	
9	Engine coolant		Replace after the first 11 years or 220,000 km (137,500 miles), and every six years or 120,000 km (75,000 miles) thereafter																	
10	Clutch system				I		I		I		I		I		I		I		I	
11	Transmission oil						I				I				I				I	
12	ATF and CVTF						I				I				I				I	Note 3.
13	Front and rear differential oil						I				I				I				I	
14	Brake line				I		I		I		I		I		I		I		I	
15	Brake fluid						R				R				R				R	
16	Disc brake pad and disc				I		I		I		I		I		I		I		I	
17	Parking brake				I		I		I		I		I		I		I		I	
18	Suspension				I		I		I		I		I		I		I		I	
19	Wheel bearing										(I)								(I)	
20	Axle boots and joints				I		I		I		I		I		I		I		I	
21	Tire rotation			I	I	I	I	I	I	I	I	I	I	I	I	I	I	I	I	Note 4.
22	Steering system (Power steering)				I		I		I		I		I		I		I		I	
23	A/C filter		Replace every 12 months or 15,000 km (9,300 miles).																	Note 5.

Symbols used:
R: Replace
I: Inspection
(R) or (I): Recommended service for safe vehicle operation.

NOTE:
1. This inspection is not required to maintain emission warranty eligibility and it does not affect the manufacturer's obligations under EPA.
2. When the vehicle is used in extremely dusty conditions, the air cleaner element should be replaced more often.
3. When CVTF is used under severe condition, to replace every 40,000 km (24,855 miles) is recommended.
4. A tire should be replaced when the tread wear indicator appears as a solid band across the tread. The indicator appears when the remaining amount of tread is less than 1.6 mm (0.063 in).
5. When the A/C filter is installed.

B: MAINTENANCE SCHEDULE 2

Item	Maintenance interval	Repeat short distance drive	Repeat rough/muddy road drive	Extremely cold weather area	Salt or other corrosive used or coastal area	High humidity or mountain area	Repeat towing trailer
Engine oil	3.75 months	R		R			R
	6,000 km						
	3,750 miles						
Engine oil filter	3.75 months	R		R			R
	6,000 km						
	3,750 miles						
Fuel line	7.5 months				I		
	12,000 km						
	7,500 miles						
Transmission oil	15 months						R
	24,000 km						
	15,000 miles						
ATF	15 months						R
	24,000 km						
	15,000 miles						
CVTF	40,000 km						R
	24,855 miles						
Front & rear differential gear oil	15 months						R
	24,000 km						
	15,000 miles						
Brake line	7.5 months				I		
	12,000 km						
	7,500 miles						
Brake fluid	15 months					R	
	24,000 km						
	15,000 miles						
Disc brake pad and disc	7.5 months	I	I		I		I
	12,000 km						
	7,500 miles						
Parking brake	7.5 months	I	I		I		I
	12,000 km						
	7,500 miles						
Suspension	7.5 months		I	I	I		
	12,000 km						
	7,500 miles						
Axle boots and joints	7.5 months	I	I	I	I		I
	12,000 km						
	7,500 miles						
Steering system (Power steering)	7.5 months		I	I	I		
	12,000 km						
	7,500 miles						

3. Engine Oil

A: INSPECTION

Refer to “LU” section for engine oil inspection. <Ref. to LU(H4SO)-12, INSPECTION, Engine Oil.> <Ref. to LU(H6DO)-9, INSPECTION, Engine Oil.>

B: REPLACEMENT

Refer to “LU” section for engine oil replacement. <Ref. to LU(H4SO)-12, REPLACEMENT, Engine Oil.> <Ref. to LU(H6DO)-9, REPLACEMENT, Engine Oil.>

4. Engine Oil Filter

A: REPLACEMENT

Refer to “LU” section for engine oil filter replacement. <Ref. to LU(H4SO)-34, Engine Oil Filter.> <Ref. to LU(H6DO)-15, Engine Oil Filter.>

5. Spark Plug

A: REPLACEMENT

Refer to “IG” section for spark plug replacement. <Ref. to IG(H4SO)-3, Spark Plug.> <Ref. to IG(H4DOTC)-4, Spark Plug.> <Ref. to IG(H6DO)-4, Spark Plug.>

6. V-belt

A: INSPECTION

Refer to “ME” section for V-belt inspection. <Ref. to ME(H4SO)-43, INSPECTION, V-belt.> <Ref. to ME(H4DOTC)-43, INSPECTION, V-belt.> <Ref. to ME(H6DO)-48, INSPECTION, V-belt.>

B: REPLACEMENT

Refer to “ME” section for V-belt replacement. <Ref. to ME(H4SO)-42, V-belt.> <Ref. to ME(H4DOTC)-42, V-belt.> <Ref. to ME(H6DO)-48, V-belt.>

7. Timing Belt

A: INSPECTION

1. SOHC MODEL (INSPECTION OF TIMING BELT POSITION)

1) Remove the timing belt cover (LH).
2) Rotate the crank pulley to set #1 cylinder piston to top dead center of compression stroke and check the followings.
(1) Confirm that the arrow (A) of camshaft pulley LH points in an upward direction.

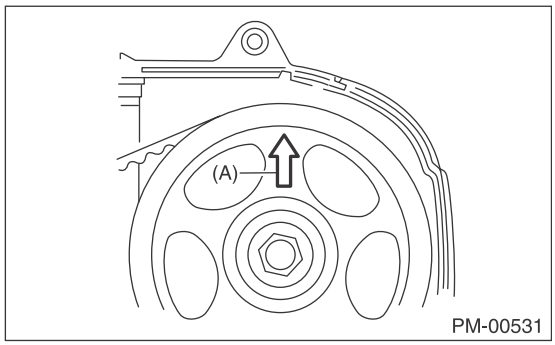

(2) Remove the sealing rubber (B) of timing belt cover RH.
(3) Confirm that the arrow (C) of camshaft pulley RH points in an upward direction.

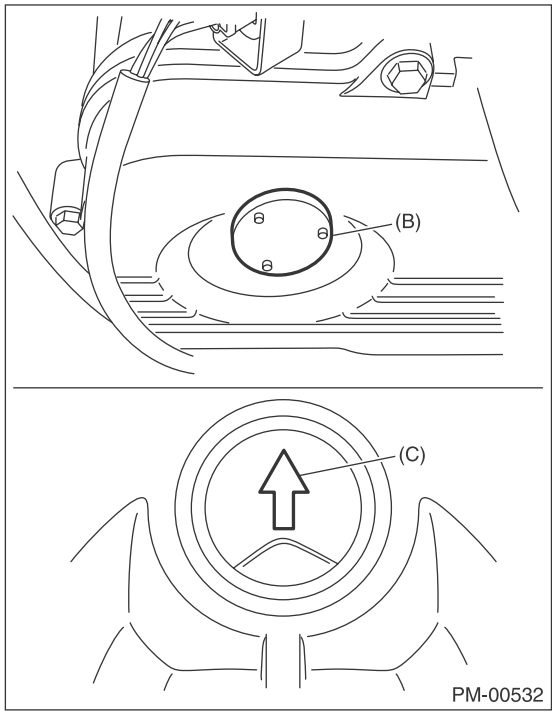

3) If the camshaft pulley or timing belt position is not appropriate, check the faulty part and repair or replace as required.

2. SOHC MODEL (OTHER INSPECTIONS)

1) Remove the front timing belt cover and timing belt cover (LH).
2) While cranking engine at least four rotations, check the timing belt back surface for cracks or damage. Replace the faulty timing belt with new part as needed.
3) When the side part of timing belt is abnormally worn (fluff or jumping out of core) or damaged, check the idlers, tensioner, water pump pulley and cam sprocket to determine idler alignment (squareness). Replace the worn timing belt with new part.
4) Install the front timing belt cover and timing belt cover (LH).

3. DOHC MODEL (INSPECTION OF TIMING BELT POSITION)

1) Remove the timing belt cover (LH) and (RH).
2) Rotate the crank pulley to align single line mark (A) on the intake camshaft pulley RH with notch (B) on timing belt cover and check the followings.
(1) Confirm that the double line marks (C) on intake camshaft pulley RH and exhaust camshaft pulley RH are aligned.
(2) Confirm that the single line mark (D) on exhaust camshaft pulley RH and notch (E) on timing belt cover are aligned.

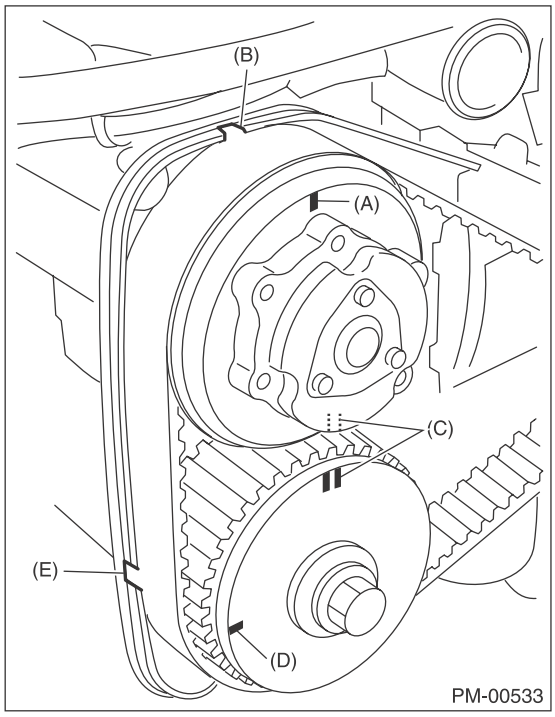

(3) Confirm that the single line mark (A) on intake camshaft pulley LH and notch (B) on timing belt cover are aligned.
(4) Confirm that the double line marks (C) on intake camshaft pulley LH and exhaust camshaft pulley LH are aligned.

(5) Confirm that the single line mark (D) on exhaust camshaft pulley LH and notch (E) on timing belt cover are aligned.

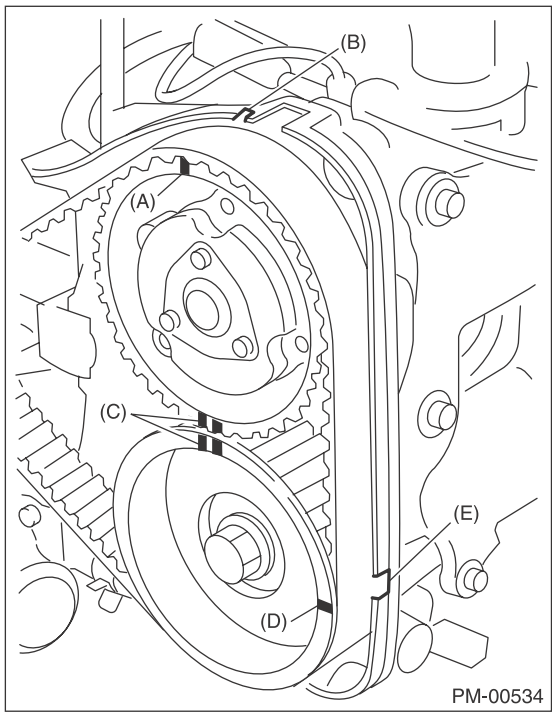

3) If the camshaft pulley position is not appropriate, check the faulty part and repair or replace as required.

4. DOHC MODEL (OTHER INSPECTIONS)

1) Remove the timing belt cover (LH).
2) While cranking engine at least four rotations, check the timing belt back surface for cracks or damage. Replace the faulty timing belt with new part as needed.
3) When the side part of timing belt (arrow direction shown in the figure) is abnormally worn (fluff or jumping out of core) or damaged, check the idlers, tensioner, water pump pulley and cam sprocket to determine idler alignment (squareness). Replace the worn timing belt with new part.

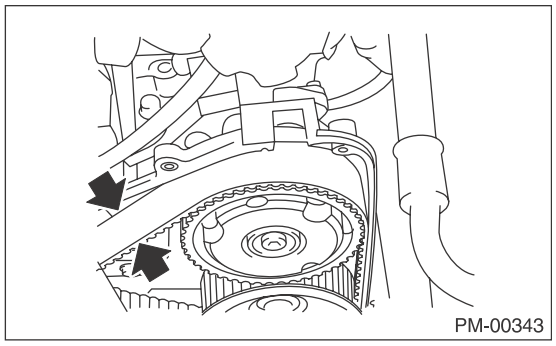

4) Install the timing belt cover (LH).

B: REPLACEMENT

Refer to “ME” section for timing belt replacement. <Ref. to ME(H4SO)-47, Timing Belt.> <Ref. to ME(H4DOTC)-51, Timing Belt.>

8. Fuel Line

A: INSPECTION

The fuel line is located mostly internally, so check pipes, areas near pipes, and engine compartment piping for rust, hose damage, loose band, etc. If faulty parts are found, repair or replace them. <Ref. to FU(H4DOTC)-91, INSPECTION, Fuel Delivery, Return and Evaporation Lines.>

9. Fuel Filter

A: REPLACEMENT

Refer to “FU” section for fuel filter replacement. <Ref. to FU(H4SO)-64, Fuel Filter.> <Ref. to FU(H4DOTC)-84, Fuel Filter.> <Ref. to FU(H6DO)-73, Fuel Filter.>

B: INSPECTION

Replace if the filter is clogged, or time for replacement has come.

10. Air Cleaner Element

A: REPLACEMENT

Refer to “IN” section for air cleaner element replacement. <Ref. to IN(H4SO)-4, Air Cleaner Element.> <Ref. to IN(H4DOTC)-7, Air Cleaner Element.> <Ref. to IN(H6DO)-4, Air Cleaner Element.>

11.Cooling System

A: INSPECTION

1. RADIATOR

Refer to “CO” section for radiator inspection. <Ref. to CO(H4SO)-22, INSPECTION, Radiator.> <Ref. to CO(H4DOTC)-23, INSPECTION, Radiator.> <Ref. to CO(H6DO)-19, INSPECTION, Radiator.>

2. RADIATOR CAP

Refer to “CO” section for radiator cap inspection. <Ref. to CO(H4SO)-23, INSPECTION, Radiator Cap.> <Ref. to CO(H4DOTC)-24, INSPECTION, Radiator Cap.> <Ref. to CO(H6DO)-20, INSPECTION, Radiator Cap.>

3. COOLING FAN

Check the radiator fan operates using Subaru Select Monitor, when the coolant temperature exceeds 98°C (208°F). If it does not operate, check the radiator fan system. <Ref. to CO(H4SO)-8, INSPECTION, Radiator Fan System.> <Ref. to CO(H4DOTC)-8, INSPECTION, Radiator Fan System.> <Ref. to CO(H6DO)-9, INSPECTION, Radiator Fan System.>

4. COOLING SYSTEM

Start the engine, and then inspect that it does not overheat or it is not cooled excessively. If it overheats or it is cooled excessively, check the cooling system.

12.Engine Coolant

A: REPLACEMENT

Refer to “CO” section for engine coolant replacement. <Ref. to CO(H4SO)-14, REPLACEMENT, Engine Coolant.> <Ref. to CO(H4DOTC)-14, REPLACEMENT, Engine Coolant.> <Ref. to CO(H6DO)-12, REPLACEMENT, Engine Coolant.>

13.Clutch System

A: INSPECTION AND ADJUSTMENT

Refer to “CL” section for inspection and adjustment of clutch system. <Ref. to CL-29, INSPECTION, Clutch Pedal.> <Ref. to CL-29, ADJUSTMENT, Clutch Pedal.>

14.Transmission Gear Oil

A: INSPECTION

Refer to “6MT” section for transmission gear oil inspection. <Ref. to 6MT-23, INSPECTION, Transmission Gear Oil.>

B: REPLACEMENT

Refer to “6MT” section for transmission gear oil replacement. <Ref. to 6MT-23, REPLACEMENT, Transmission Gear Oil.>

15. Automatic Transmission Fluid

A: INSPECTION

Refer to “5AT” section for ATF inspection. <Ref. to 5AT-28, INSPECTION, Automatic Transmission Fluid.>

B: REPLACEMENT

Refer to “5AT” section for ATF replacement. <Ref. to 5AT-28, REPLACEMENT, Automatic Transmission Fluid.>

16.CVTF

A: REPLACEMENT

Refer to “CVT” section for CVTF replacement.
<Ref. to CVT-37, REPLACEMENT, CVTF.>

17. Front & Rear Differential Gear Oil

A: INSPECTION

1. FRONT DIFFERENTIAL (MT MODEL)

Front differential gear oil of MT model lubricates the transmission and differential together. Refer to “Transmission Gear Oil” for replacement procedure. <Ref. to 6MT-23, INSPECTION, Transmission Gear Oil.>

2. FRONT DIFFERENTIAL (AT MODEL)

Refer to “5AT” section for inspection of AT model front differential gear oil. <Ref. to 5AT-30, INSPECTION, Differential Gear Oil.>

3. REAR DIFFERENTIAL

Refer to “DI” section for rear differential gear oil inspection. <Ref. to DI-23, INSPECTION, Differential Gear Oil.>

B: REPLACEMENT

1. FRONT DIFFERENTIAL (MT MODEL)

Front differential gear oil of MT model lubricates the transmission and differential together. Refer to “6MT” section for replacement procedure. <Ref. to 6MT-23, REPLACEMENT, Transmission Gear Oil.>

2. FRONT DIFFERENTIAL (AT MODEL)

Refer to “5AT” section for front differential gear oil replacement. <Ref. to 5AT-30, REPLACEMENT, Differential Gear Oil.>

3. FRONT DIFFERENTIAL (CVT MODEL)

Refer to “CVT” section for front differential gear oil replacement. <Ref. to CVT-42, REPLACEMENT, Differential Gear Oil.>

4. REAR DIFFERENTIAL

Refer to “DI” section for rear differential gear oil replacement. <Ref. to DI-23, REPLACEMENT, Differential Gear Oil.>

18.Brake Line

A: INSPECTION

1. BRAKE LINE

1) Check for scratches, swelling, corrosion, traces of fluid leakage on the brake hoses or pipe joints.
2) Make sure that brake pipes/hoses do not interfere with adjacent parts and there is no loose connector/clamp during driving.
3) Check any trace of fluid leakage, scratches, etc. on master cylinder, wheel cylinder and hydraulic unit.

NOTE:
• When the brake fluid level in the reservoir tank is lower than specified limit, the brake warning light on the combination meter will illuminate.
• Visually check the brake hose for damage. (Use a mirror where it is difficult to see)

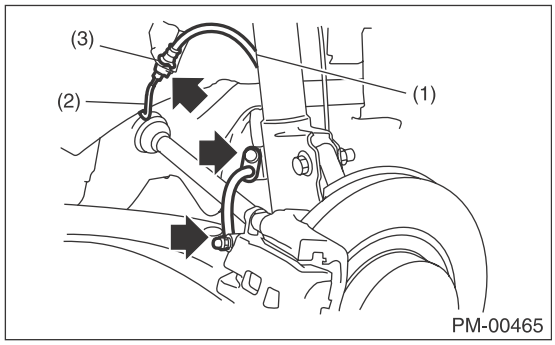

(1) Front brake hose
(2) Front brake pipe
(3) Clamp

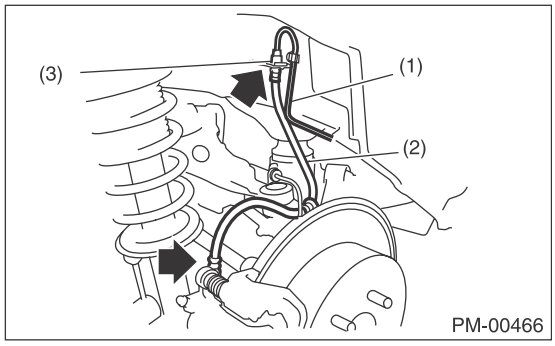

(1) Brake pipe
(2) Rear brake hose
(3) Clamp

2. SERVICE BRAKE

Refer to “BR” section for foot brake inspection. <Ref. to BR-40, INSPECTION, Brake Pedal.>

3. BRAKE SERVO SYSTEM

1) With the engine off, depress the brake pedal several times applying the same pedal force. Check that the travel distance should not change.
2) With the brake pedal depressed, start the engine. Check that the pedal moves slightly toward the floor.
3) With the brake pedal depressed, stop the engine and keep the pedal depressed for 30 seconds. Check that the pedal height does not change.
4) A check valve is built into the brake booster nipple. Disconnect the vacuum hose to inspect function of check valve.
Check that check valve ventilates from booster side to engine side. Also, check that there is no ventilation from engine side to booster side.

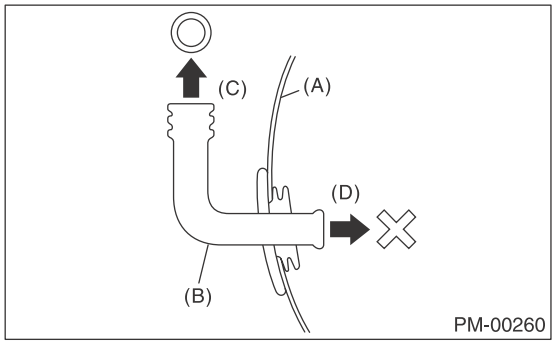

(A) Brake booster
(B) Check valve
(C) Engine side
(D) Brake booster side

5) Check the vacuum hose for cracks or other damage.

CAUTION:
When installing the vacuum hose on the engine and brake booster, do not use soapy water or lubricating oil on their connections.
6) Check that the vacuum hose is securely tightened.

19.Brake Fluid

A: INSPECTION

Refer to “BR” section for brake fluid inspection.
<Ref. to BR-33, INSPECTION, Brake Fluid.>

B: REPLACEMENT

Refer to “BR” section for brake fluid replacement.
<Ref. to BR-33, REPLACEMENT, Brake Fluid.>

20.Disc Brake Pad and Disc

A: INSPECTION

Refer to “BR” section for disc brake pad and disc inspection. <Ref. to BR-14, INSPECTION, Front Brake Pad.> <Ref. to BR-21, INSPECTION, Rear Brake Pad.> <Ref. to BR-15, INSPECTION, Front Disc Rotor.> <Ref. to BR-22, INSPECTION, Rear Disc Rotor.>

21.Brake Lining and Drum

A: INSPECTION

Refer to “PB” section for brake lining inspection. <Ref. to PB-8, INSPECTION, Parking Brake Assembly (Rear Disc Brake).>

B: ADJUSTMENT

Refer to “PB” section for brake lining adjustment. <Ref. to PB-8, ADJUSTMENT, Parking Brake Assembly (Rear Disc Brake).>

22.Suspension

A: INSPECTION

1. FRONT SUSPENSION BALL JOINT

1) Lift up the vehicle until front wheels are off ground.
2) Grasp the bottom of tire and move it in and out in axial direction. If movement (B) is observed between the brake disc cover (A) and end of front arm (D), ball joint (C) may be excessively worn.

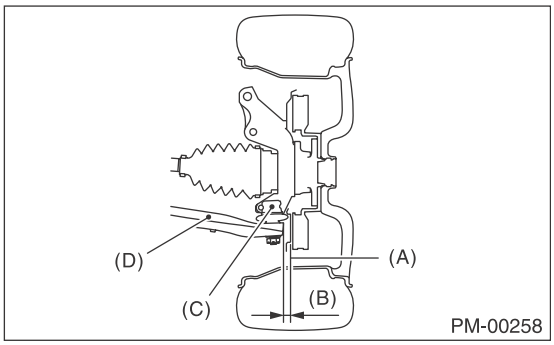

3) Next, grasp the end of front arm (C) and move it up and down. If movement (A) between the housing (D) and front arm (C) boss is observed, ball joint (B) may be excessively worn.

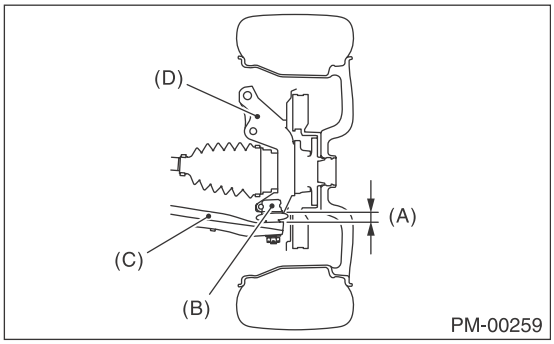

4) If the relative movement is observed in the preceding two steps, remove and inspect the ball joint. If the free play exceeds standard value, replace the ball joint. <Ref. to FS-20, Front Ball Joint.>
5) Damage of dust boot
Visually inspect the ball joint dust boot. Replace if ball joint is damaged.

NOTE:
When the front arm ball joint is removed or replaced, check the toe-in of front wheel. If it is not within the specified value, adjust the toe-in. <Ref. to FS-8, Wheel Alignment.>

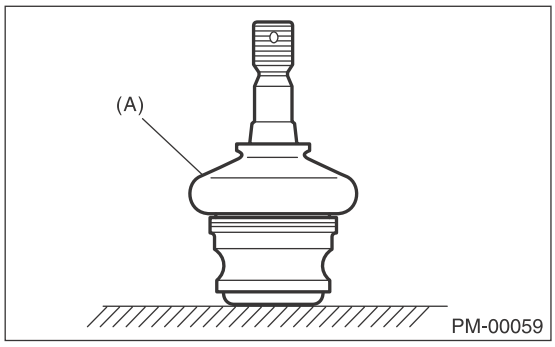

(A) Dust boot

2. REAR SUSPENSION BALL JOINT

1) Lift up the vehicle until rear wheels are off ground.
2) Grasp the bottom of tire and move it in and out in axial direction.
3) If movement is observed between the brake disc cover (A) and end of front lateral link (B), ball joint may be excessively worn.

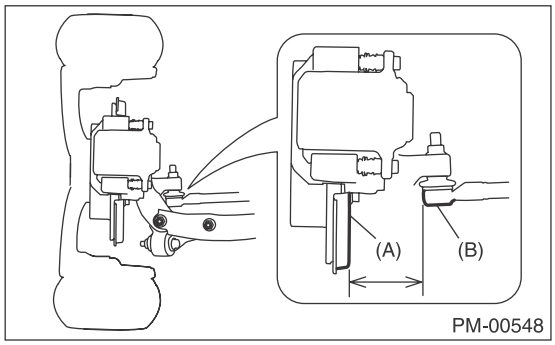

4) Grasp the end of front lateral link (B) and move it up and down. If movement is observed between the housing (C) and front lateral link (B) boss, ball joint may be excessively worn.

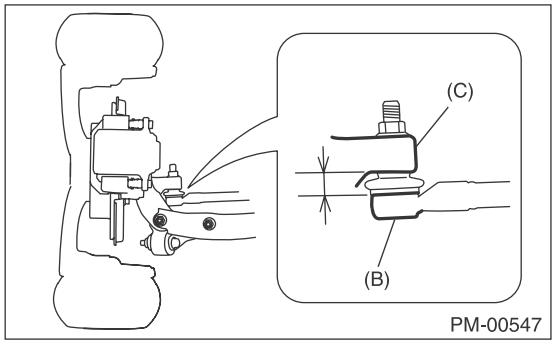

5) If the movement related to the previous two steps is observed, replace the front lateral link. <Ref. to RS-15, Front Lateral Link.>

6) Damage of dust boot
Visually inspect the ball joint dust boot. Replace if front lateral link is damaged.
7) Check upper arm ball joint in the same manner.

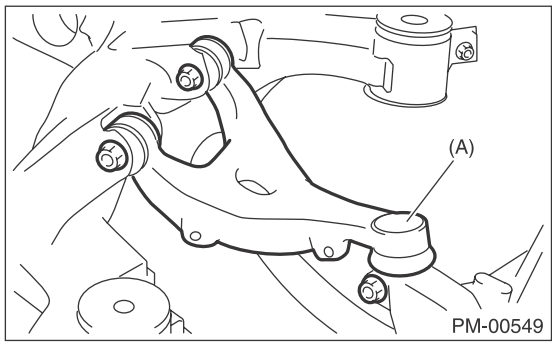

(A) Upper arm ball joint

3. FRONT, REAR SUSPENSION BUSHING

Apply pressure with tire lever etc, and inspect the bushing for excessive wear or damage. Replace the bushings if faulty.

- Front suspension bushing

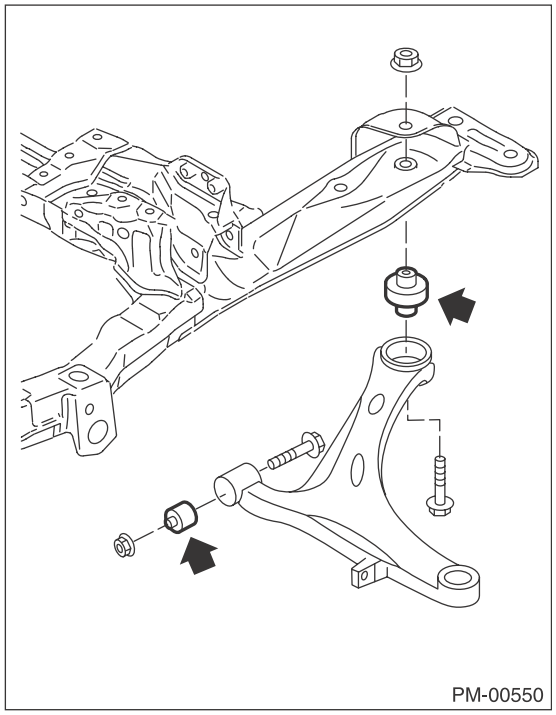

- Rear suspension bushing

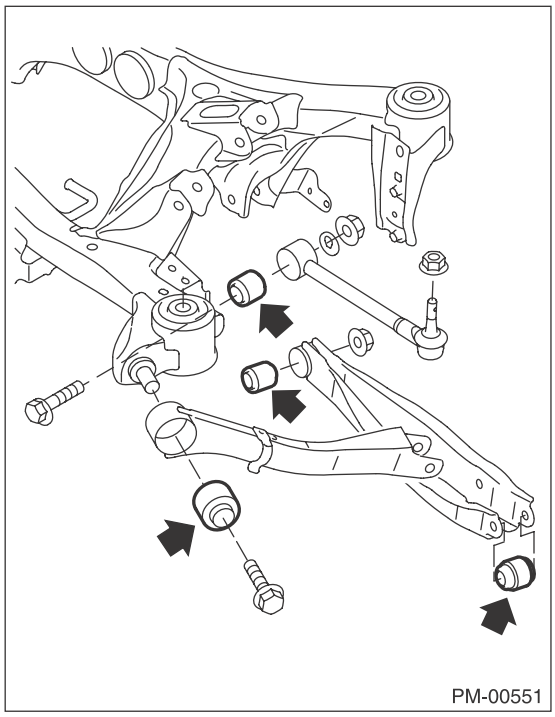

4. WHEEL ARCH HEIGHT

Refer to “FS” section for wheel arch height inspection. <Ref. to FS-9, WHEEL ARCH HEIGHT, INSPECTION, Wheel Alignment.>

5. WHEEL ALIGNMENT

Measure and adjust the front and rear wheel alignment at a time. Refer to “FS” section for measurement and adjustment of wheel alignment. <Ref. to FS-8, INSPECTION, Wheel Alignment.>

6. OIL LEAKAGE OF STRUT AND SHOCK ABSORBER

Visually inspect the front strut and rear shock absorber for oil leakage. Replace the front strut and rear shock absorber if oil leaks excessively.

7. TIGHTNESS OF BOLTS AND NUTS

Check the bolts and nuts for looseness. Retighten the bolts and nuts to specified torque. If the self-locking nuts and bolts are removed, replace them with new parts. <Ref. to FS-2, General Description.> <Ref. to RS-2, General Description.>

8. DAMAGE TO SUSPENSION PARTS

Check the following parts and the fastening portion of the vehicle body for deformation or excessive rusting which impairs the suspension. Thoroughly remove the deposits of the lower spring seat of strut where dust or mud are likely piled up. If necessary, replace the damaged parts with new parts. If minor rust formation, pitting, etc. are noted, remove the rust and take rust prevention measure.

- Front suspension
  - Front arm
  - Cradle
  - STRUT
- Rear suspension
  - Sub frame
  - Front lateral link
  - Rear lateral link
  - Upper arm
  - Trailing link
  - Shock absorber
- In the area where salt is sprayed to melt snow on a road in winter, check suspension parts for damage caused by rust every 12 months after lapse of 60 months. Take rust prevention measures as required.

23.Wheel Bearing

A: INSPECTION

1. FRONT WHEEL BEARING

NOTE:
Inspect the condition of front wheel bearing grease.
1) Jack-up the front side of vehicle.
2) While holding the front wheel by hand, swing it in and out to check bearing free play.
3) Loosen the wheel nuts, and remove the front wheel.
4) If the bearing free play exists in step 2) above, attach a dial gauge to the hub and measure axial play in axial direction.

Service limit:
Straight-ahead position within 0.05 mm (0.0020 in)

5) Remove the bolts and self-locking nuts, and extract the front arm from front crossmember.
6) Remove the AAR of front drive shaft from transmission. <Ref. to DS-12, Front Axle.>
7) While supporting the front drive shaft horizontally with one hand, turn the hub with the other hand to check for noise or binding.
If the hub is noisy or binds, replace the front axle.

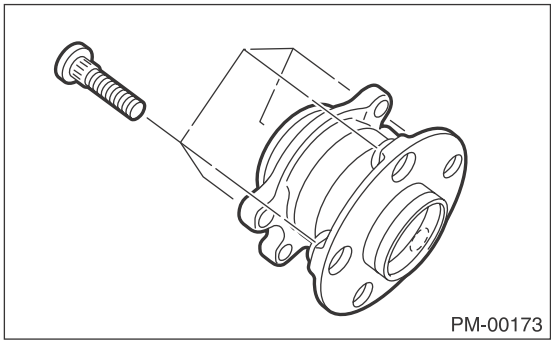

2. REAR WHEEL BEARING

1) Jack-up the rear side of vehicle.
2) While holding the rear wheel by hand, swing it in and out to check bearing free play.
3) Loosen the wheel nuts, and remove the rear wheel.
4) If the bearing free play exists in step 2) above, attach a dial gauge to the hub and measure axial play in axial direction.

Service limit:
Straight-ahead position within 0.05 mm (0.0020 in)

5) Remove the DOJ of rear drive shaft from rear differential. <Ref. to DS-30, Rear Drive Shaft.>
6) While supporting rear drive shaft horizontally with one hand, turn the hub with the other hand to check for noise or binding.
If the hub is noisy or binds, replace the rear axle.

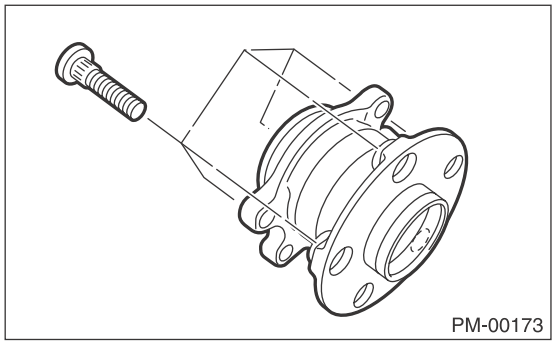

24.Axle Boots & Joints

A: INSPECTION

1. FRONT AND REAR AXLE BOOTS

Inspect the front axle boots (A) and rear axle boots (B) for deformation, damage or failure. If faulty, replace with new part. <Ref. to DS-25, Front Drive Shaft.> <Ref. to DS-30, Rear Drive Shaft.>

- Front

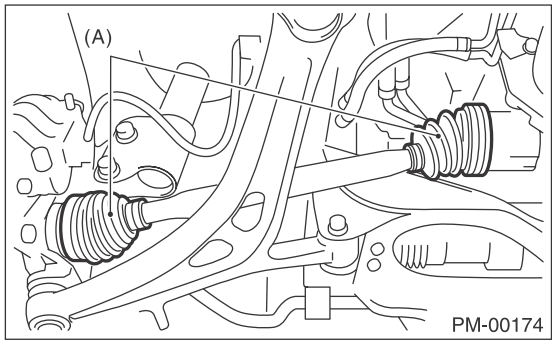

- REAR

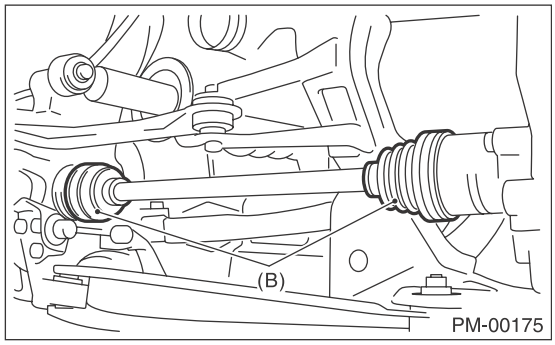

2. PROPELLER SHAFT

Inspect the propeller shaft for damage or failure. If faulty, replace with new part. <Ref. to DS-10, Propeller Shaft.>

25. Tire Rotation

A: INSPECTION

Refer to “WT” section for tire rotation procedures.
<Ref. to WT-4, TIRE ROTATION, INSPECTION, Tire and Wheel.>

26. Steering System (Power Steering)

A: INSPECTION

1. STEERING WHEEL

1) Set the steering wheel in a straight-ahead position, and check the wheel spokes to make sure they are correctly set in their specified positions.
2) Lightly turn the steering wheel to the left and right to determine the point where front wheels start to move.
Measure the distance of the movement of steering wheel (periphery).

Steering wheel free play:
0 — 17 mm (0 — 0.67 in)

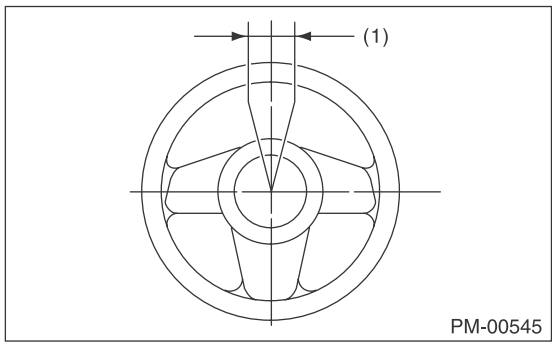

(1) Steering wheel free play

Move the steering wheel vertically toward the shaft to check if there is play in the direction.

Play limit:
0.5 mm (0.020 in)

3) Drive the vehicle and check the following items.
(1) Steering force:
The effort required for steering should be smooth and even at all points, and should not vary.
(2) Pulled to one side:
Steering wheel should not be pulled to one side while driving on a level surface.
(3) Wheel runout:
Steering wheel should not show any sign of runout.
(4) Return status:
Steering wheel should return to its original position after it has been turned and then released.

2. STEERING SHAFT JOINT

When the steering wheel free play is excessive, disconnect the universal joint of steering shaft and check it for any play and yawing torque (at the point of the crossing direction). Also inspect for any damage to sealing or worn serrations. If the joint is loose, retighten the mounting bolts to the specified torque. <Ref. to PS-18, Universal Joint.>

Tightening torque:
24 N·m (2.4 kgf-m, 17.4 ft-lb)

3. GEARBOX

1) Set the steering wheel in the straight position, then rotate it 90° in both the left and right directions. While steering wheel is being rotated, check the gearbox for looseness.

Tightening torque:
60 N·m (6.1 kgf-m, 44.3 ft-lb)

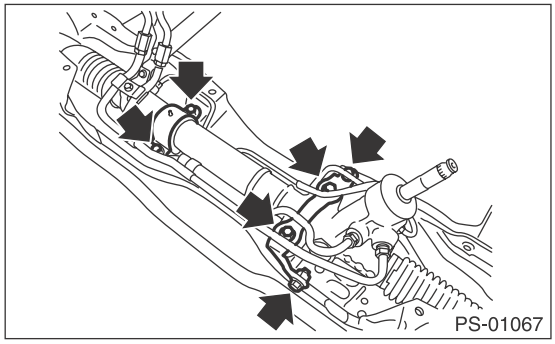

2) Check the boot for damage, cracks or deterioration.
3) With the vehicle stopped on a level surface, quickly turn the steering wheel to the left and right. While steering wheel is being rotated, check the gear backlash. If any noise is noticed, adjust the gear backlash. <Ref. to PS-37, GEARBOX BACKLASH ADJUSTMENT (SERVICING ON VEHICLE), ADJUSTMENT, Steering Gearbox.>

4. TIE-ROD

1) Check the tie-rod and tie-rod ends for bends, scratches or other damage.

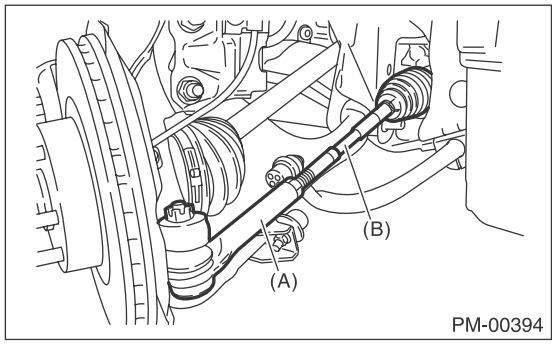

(A) Tie-rod end
(B) Tie-rod

2) Confirm that the connections of knuckle ball joints for play, and then check for damage on dust boots and free play of ball studs. If castle nut is loose, retighten it to the specified torque, then tighten further up to a maximum of 60° until the cotter pin hole is aligned.

Tightening torque:
27 N·m (2.75 kgf-m, 19.9 ft-lb)

3) Check the lock nut on the tie-rod end for tightness. If it is loose, retighten it to the specified torque.

Tightening torque:
85 N·m (8.7 kgf-m, 62.7 ft-lb)

5. GEARBOX BOOTS

Inspect both sides of the gearbox boot as follows, and correct the defects if necessary.
1) The (A) and (B) positions of the gearbox boot are fitted in (A) and (C) grooves of gearbox and the rod.
2) Clips are fitted outside of positions (A) and (B) of boot.
3) Check that there is no cracks or holes in the boot.

NOTE:
Rotate (B) position of gearbox boot against the torsion produced by the adjustment of toe-in etc. Apply grease to the groove (C).

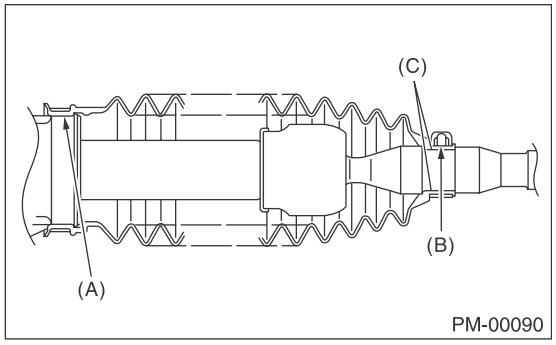

27. A/C Filter

A: REPLACEMENT

Refer to “AC” section for A/C filter replacement.
<Ref. to AC-79, REPLACEMENT, A/C Filter.>

ENGINE 1 SECTION

This service manual has been prepared to provide SUBARU service personnel with the necessary information and data for the correct maintenance and repair of SUBARU vehicles.
This manual includes the procedures for maintenance, disassembling, reassembling, inspection and adjustment of components and diagnostics for guidance of experienced mechanics.
Please peruse and utilize this manual fully to ensure complete repair work for satisfying our customers by keeping their vehicle in optimum condition. When replacement of parts during repair work is needed, be sure to use SUBARU genuine parts.

All information, illustration and specifications contained in this manual are based on the latest product information available at the time of publication approval.

FUEL INJECTION (FUEL SYSTEMS)	FU(H4SO)
EMISSION CONTROL (AUX. EMISSION CONTROL DEVICES)	EC(H4SO)
INTAKE (INDUCTION)	IN(H4SO)
MECHANICAL	ME(H4SO)
EXHAUST	EX(H4SO)
COOLING	CO(H4SO)
LUBRICATION	LU(H4SO)
SPEED CONTROL SYSTEMS	SP(H4SO)
IGNITION	IG(H4SO)
STARTING/CHARGING SYSTEMS	SC(H4SO)
ENGINE (DIAGNOSTICS)	EN(H4SO)(diag)
GENERAL DESCRIPTION	GD(H4SO)

FUJI HEAVY INDUSTRIES LTD.

G2460BE2

FUEL INJECTION (FUEL SYSTEMS)

FU(H4SO)

		Page
1.	General Description	2
2.	Throttle Body	14
3.	Intake Manifold	16
4.	Engine Coolant Temperature Sensor	21
5.	Crankshaft Position Sensor	22
6.	Camshaft Position Sensor	24
7.	Knock Sensor	26
8.	Throttle Position Sensor	28
9.	Mass Air Flow and Intake Air Temperature Sensor	29
10.	Manifold Absolute Pressure Sensor	30
11.	EGR Valve	31
12.	Fuel Injector	32
13.	Variable Valve Lift Diagnosis Oil Pressure Switch	33
14.	Oil Temperature Sensor	34
15.	Front Oxygen (A/F) Sensor	35
16.	Rear Oxygen Sensor	37
17.	Engine Control Module (ECM)	39
18.	Main Relay	40
19.	Fuel Pump Relay	42
20.	Electronic Throttle Control Relay	44
21.	Fuel	46
22.	Fuel Tank	48
23.	Fuel Filler Pipe	55
24.	Fuel Pump	58
25.	Fuel Level Sensor	60
26.	Fuel Sub Level Sensor	62
27.	Fuel Filter	64
28.	Fuel Delivery and Evaporation Lines	66
29.	Fuel System Trouble in General	71

1. General Description

A: SPECIFICATION

Fuel tank	Capacity	70 ℓ (18.5 US gal, 15.4 Imp gal)
	Install locations	Under rear seat
Fuel pump	Type	Impeller
	Shutoff discharge pressure	677 kPa (6.9 kgf/cm^2, 98.2 psi) or less
	Discharge rate	105 ℓ (27.7 US gal, 23.1 Imp gal) [12 V at 300 kPa (3.06 kgf/cm^2, 43.5 psi)]
Fuel filter		In-tank type

B: COMPONENT

1. INTAKE MANIFOLD

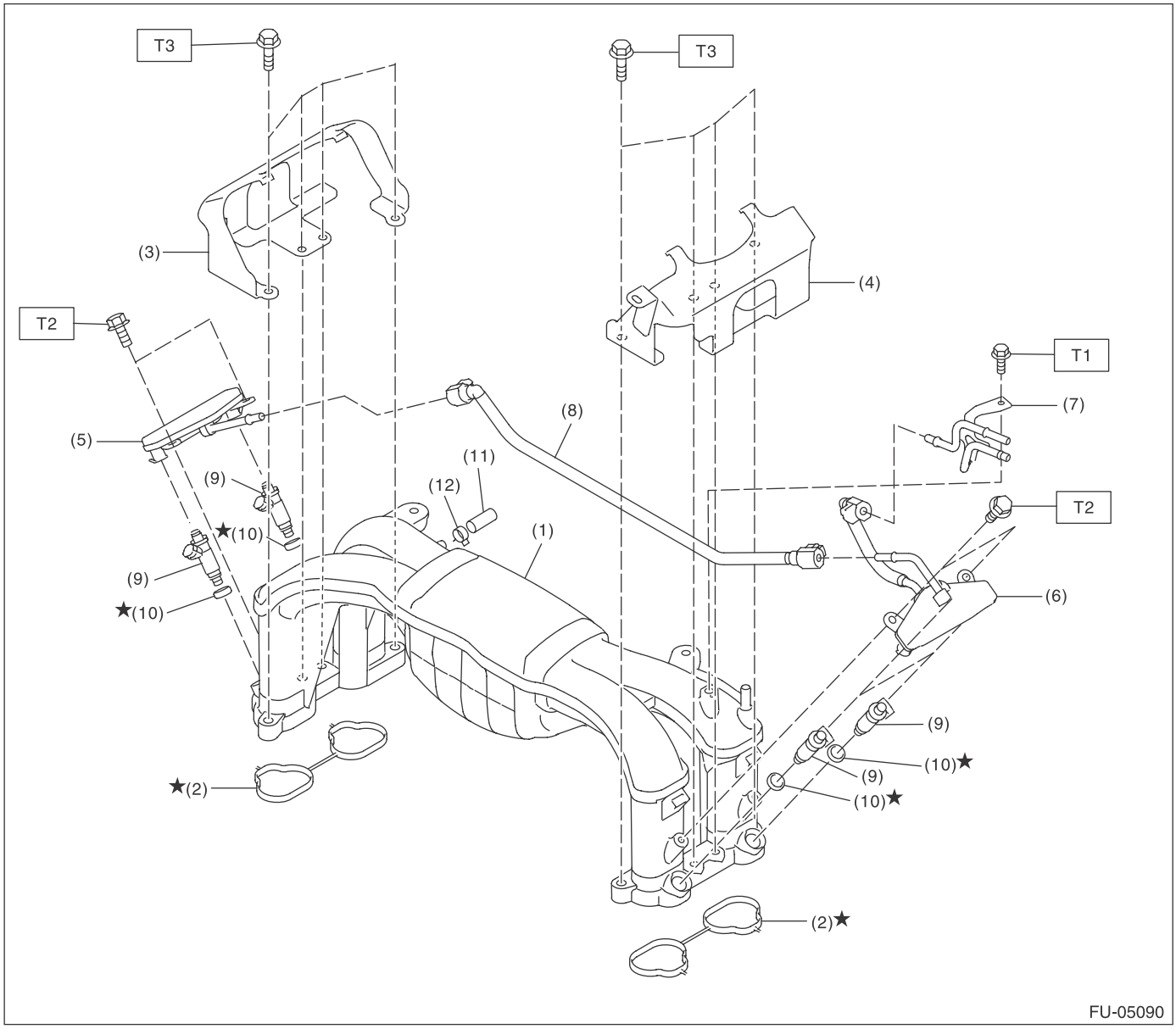

(1)	Intake manifold	(7)	Fuel pipe
(2)	Gasket	(8)	Fuel delivery pipe
(3)	Intake manifold protector RH	(9)	Injector
(4)	Intake manifold protector LH	(10)	O-ring
(5)	Fuel gallery RH	(11)	Cap
(6)	Fuel gallery LH	(12)	Clip

Tightening torque:N·m (kgf-m, ft-lb)
T1: 6.4 (0.7, 4.7)
T2: 19 (1.9, 14.0)
T3: 25 (2.5, 18.4)

2. AIR INTAKE SYSTEM

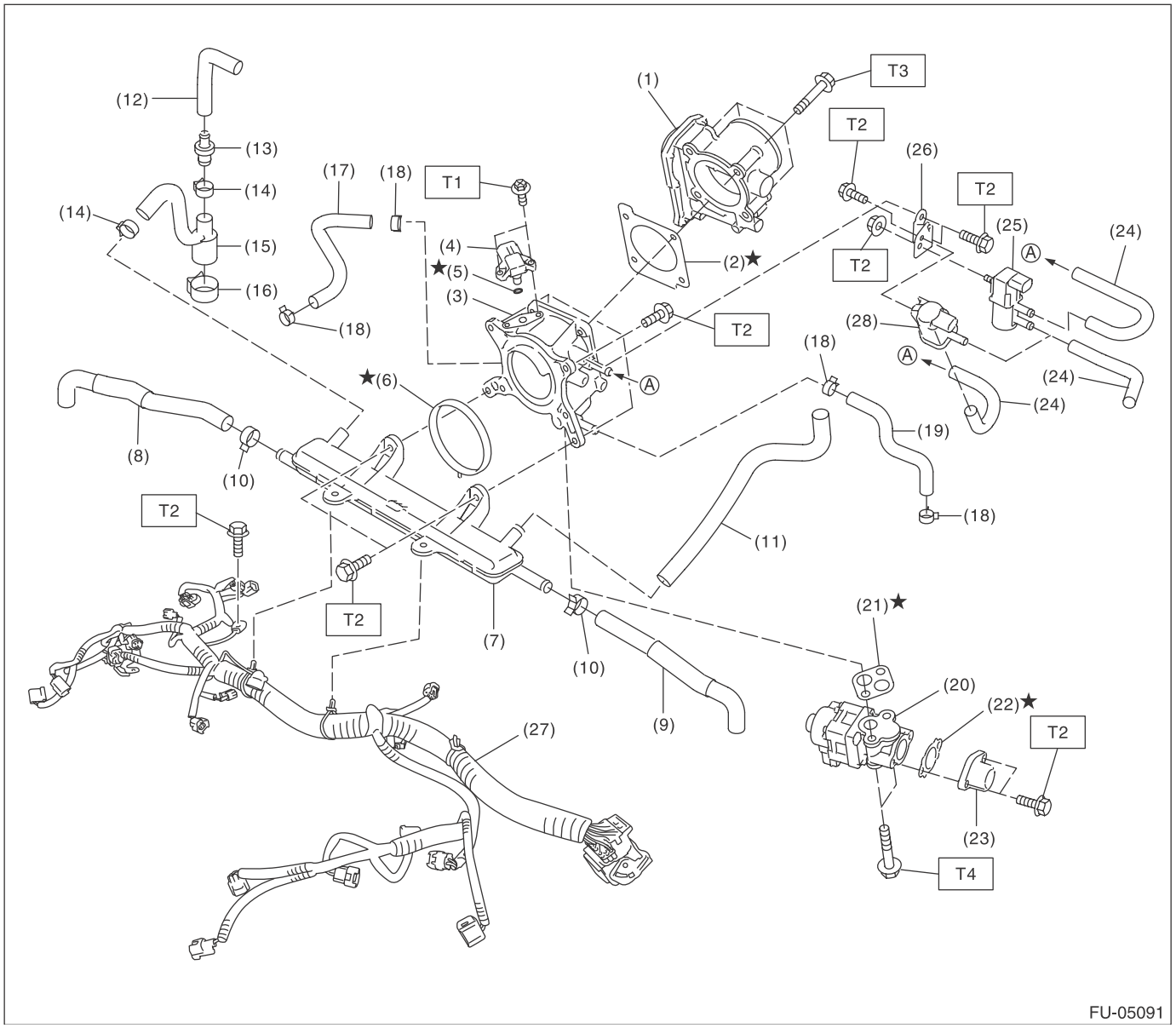

(1)	Throttle body	(13)	PCV valve	(25)	Purge control solenoid valve (U6 model)
(2)	Gasket	(14)	Clip	(26)	Bracket
(3)	Multi-function duct	(15)	PCV hose ASSY	(27)	Engine harness
(4)	Manifold absolute pressure sensor	(16)	Clip	(28)	Purge control solenoid valve (U5 model)
(5)	O-ring	(17)	Heater hose A		
(6)	Gasket	(18)	Clip		
(7)	PCV pipe	(19)	Heater hose B		
(8)	PCV hose A	(20)	EGR valve		
(9)	PCV hose B	(21)	Gasket		
(10)	Clip	(22)	Gasket		
(11)	PCV hose C	(23)	EGR pipe adapter		
(12)	PCV hose D	(24)	Evaporation hose		

Tightening torque:N·m (kgf-m, ft-lb)
T1: 2 (0.2, 1.5)
T2: 6.4 (0.7, 4.7)
T3: 8 (0.8, 5.9)
T4: 19 (1.9, 14.0)

3. CRANKSHAFT POSITION, CAMSHAFT POSITION AND KNOCK SENSORS

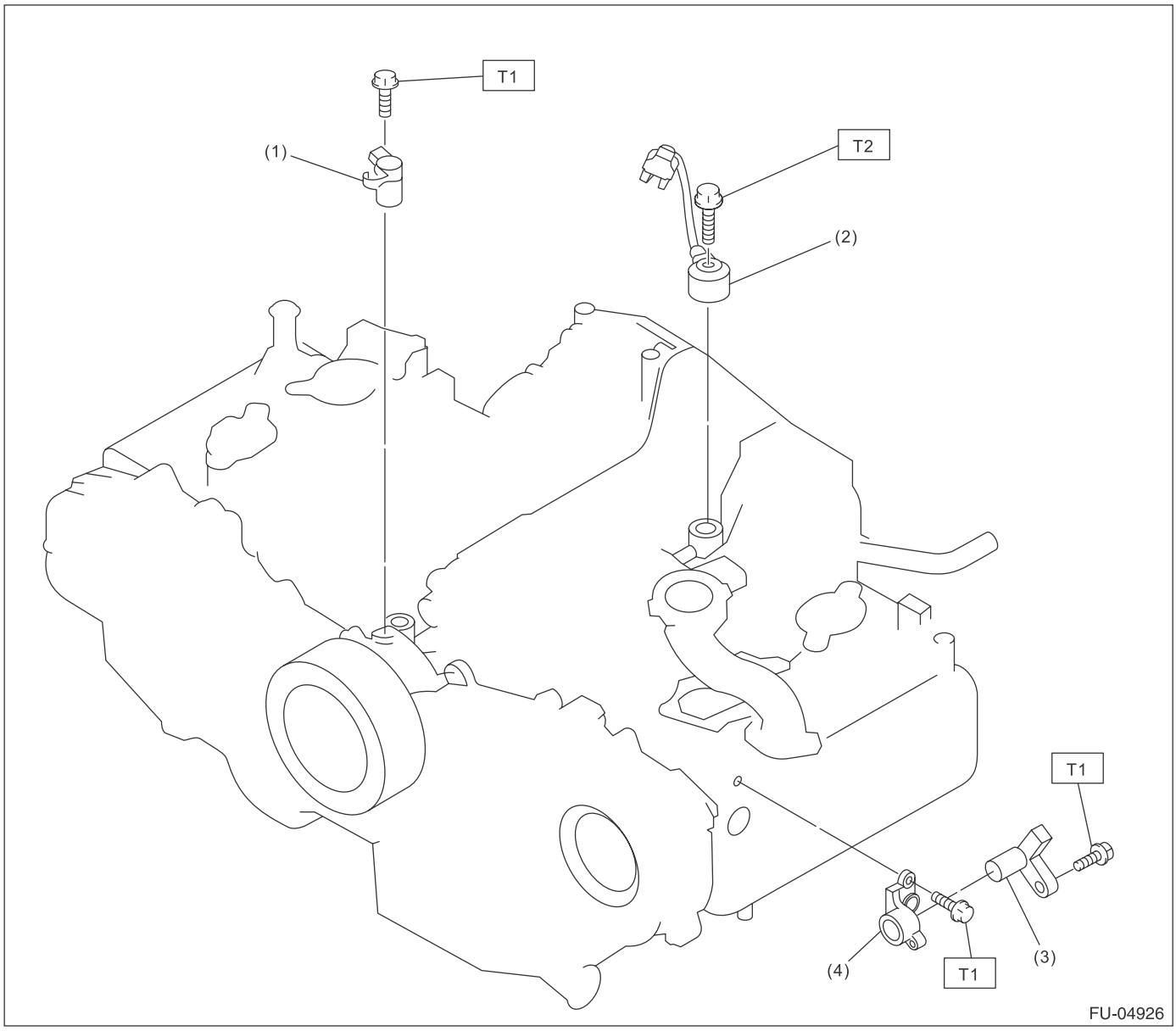

(1) Crankshaft position sensor
(2) Knock sensor
(3) Camshaft position sensor
(4) Camshaft position sensor support

Tightening torque:N·m (kgf-m, ft-lb)
T1: 6.4 (0.7, 4.7)
T2: 24 (2.4, 17.7)

4. FUEL TANK

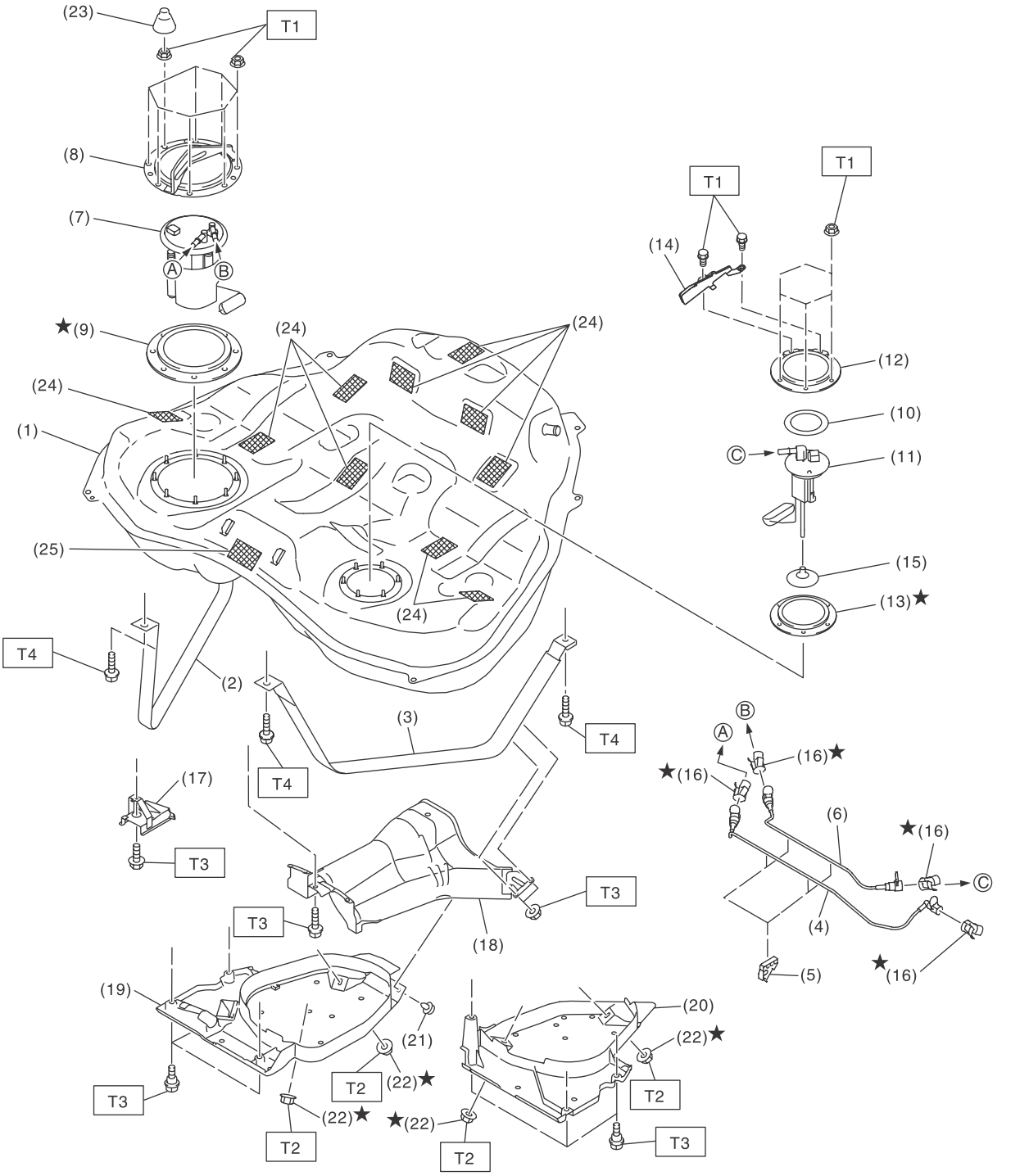

FU-05148

(1) Fuel tank
(2) Fuel tank band RH
(3) Fuel tank band LH
(4) Fuel delivery tube
(5) Tube clamp
(6) Fuel sub delivery tube
(7) Fuel pump ASSY
(8) Fuel pump upper plate
(9) Fuel pump gasket
(10) Fuel sub level sensor upper plate cushion
(11) Fuel sub level sensor
(12) Fuel sub level sensor upper plate
(13) Fuel sub level sensor gasket
(14) Fuel sub level sensor protector
(15) Fuel sub level sensor filter
(16) Retainer
(17) Stopper
(18) Heat shield cover
(19) Fuel tank protector RH
(20) Fuel tank protector LH
(21) Clip
(22) Self-locking nut
(23) Rubber cap
(24) Cushion
(25) Cushion

Tightening torque:N·m (kgf-m, ft-lb)
T1: 4.4 (0.4, 3.2)
T2: 9 (0.9, 6.6)
T3: 18 (1.8, 13.3)
T4: 33 (3.4, 24.3)

5. FUEL LINE

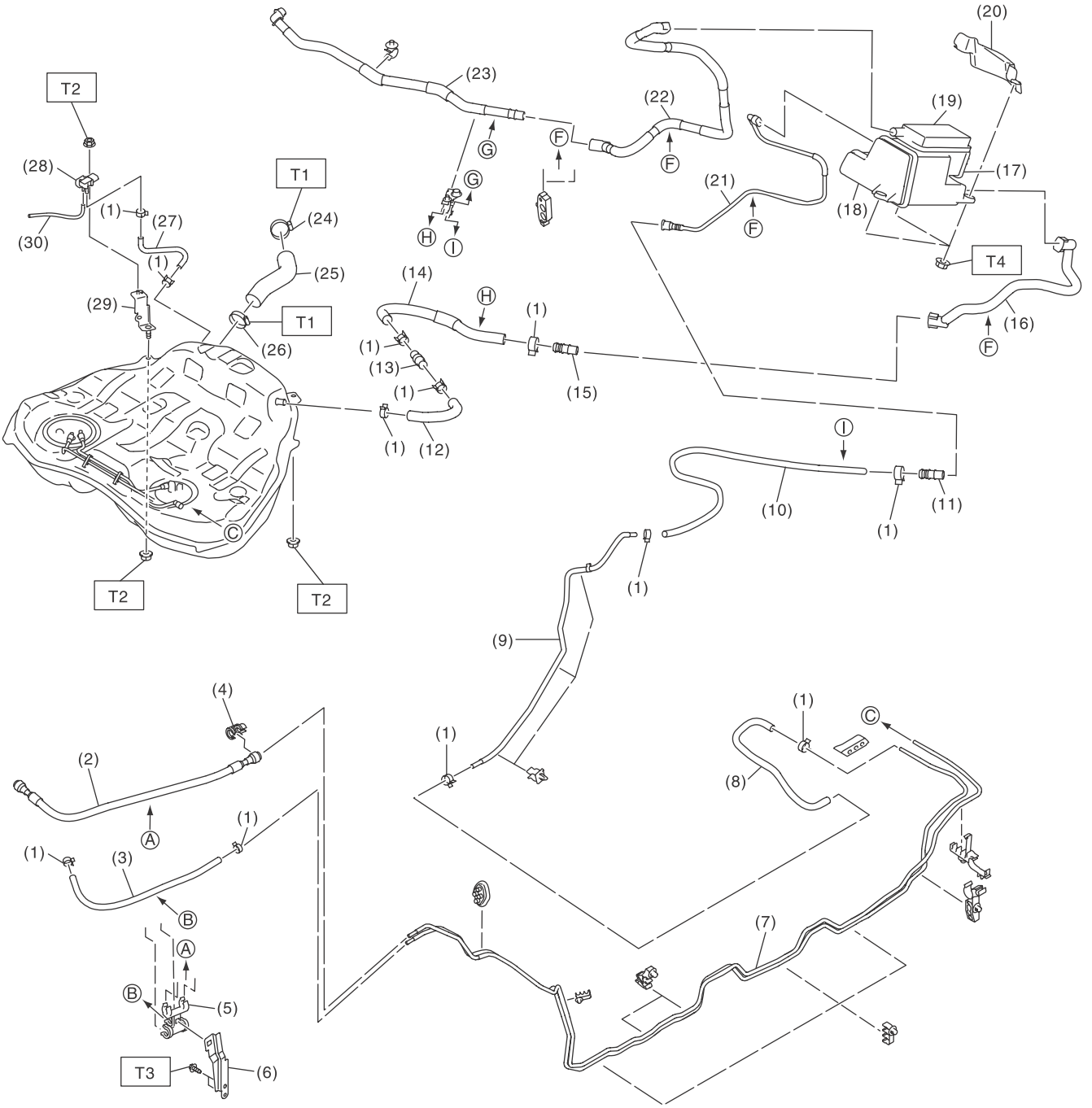

FU-05092

(1) Clip
(2) Fuel delivery hose
(3) Connect check cover
(4) Evaporation hose
(5) Fuel hose clamp
(6) Bracket
(7) Fuel pipe ASSY
(8) Purge hose A
(9) Purge pipe
(10) Purge hose B
(11) Connector
(12) Air vent hose A
(13) Circulate tube
(14) Air vent tube
(15) Circulate hose
(16) Vent tube
(17) Drain valve
(18) Canister
(19) Drain filter
(20) Canister protector
(21) Charge tube
(22) Canister drain tube
(23) Drain tube ASSY
(24) Clamp
(25) Fuel filler hose
(26) Clamp
(27) Fuel tank pressure sensor bracket
(28) Pressure hose
(29) Fuel tank pressure sensor
(30) Vacuum hose

Tightening torque:N·m (kgf-m, ft-lb)
T1: 2.5 (0.3, 1.8)
T2: 7.35 (0.7, 5.4)
T3: 7.5 (0.8, 5.5)
T4: 8 (0.8, 5.9)

6. FUEL FILLER PIPE

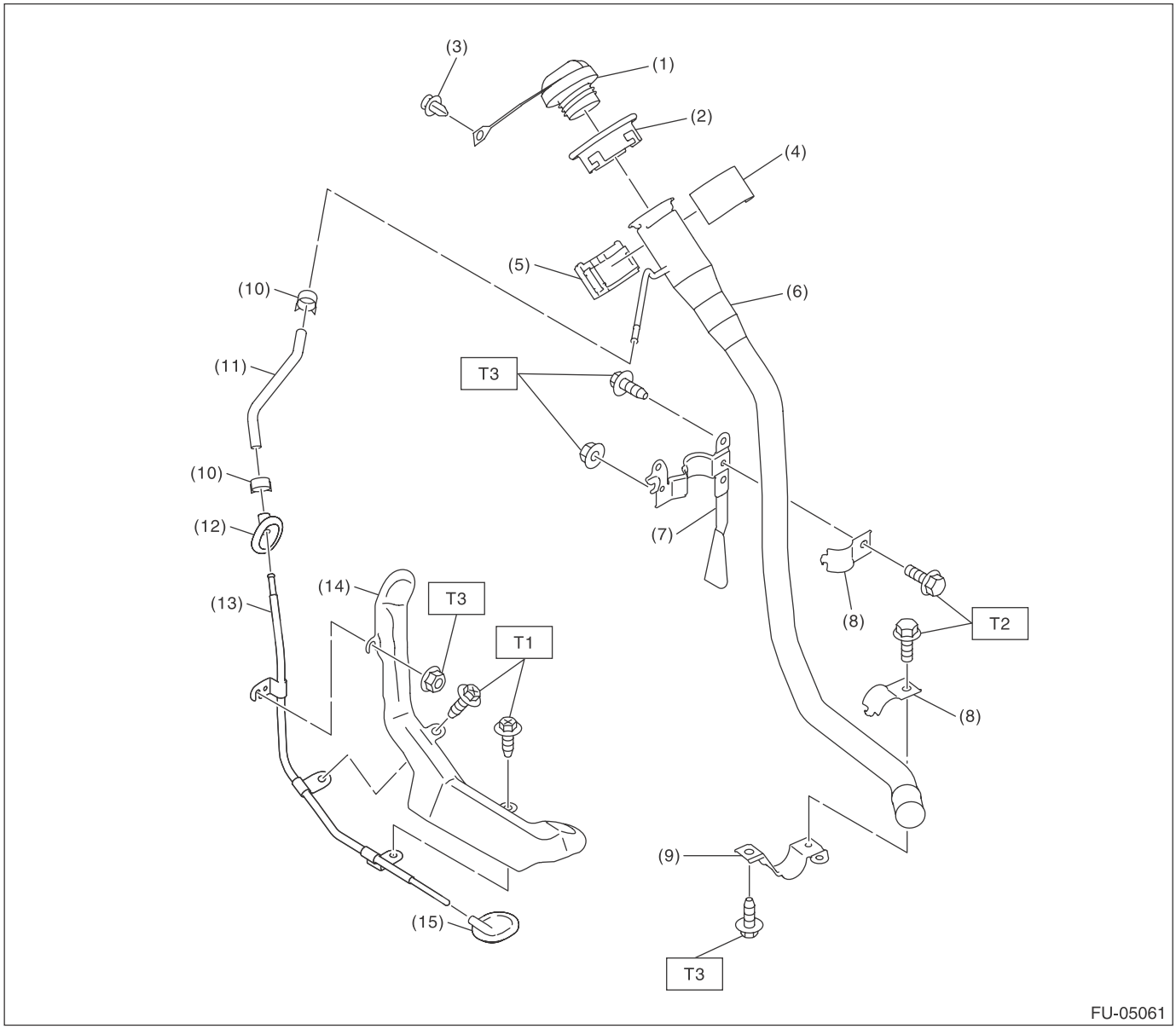

(1) Fuel filler cap
(2) Fuel filler pipe protector
(3) Clip
(4) Neck holder A
(5) Neck holder B
(6) Fuel filler pipe
(7) Fuel filler pipe bracket A
(8) Fuel filler pipe bracket B
(9) Fuel filler pipe bracket C
(10) Clip
(11) Evaporation hose
(12) Grommet
(13) Evaporation pipe
(14) Evaporation pipe protector
(15) Grommet

Tightening torque:N·m (kgf-m, ft-lb)
T1: 1 (0.1, 0.7)
T2: 7.35 (0.7, 5.4)
T3: 7.5 (0.8, 5.5)

7. FUEL PUMP

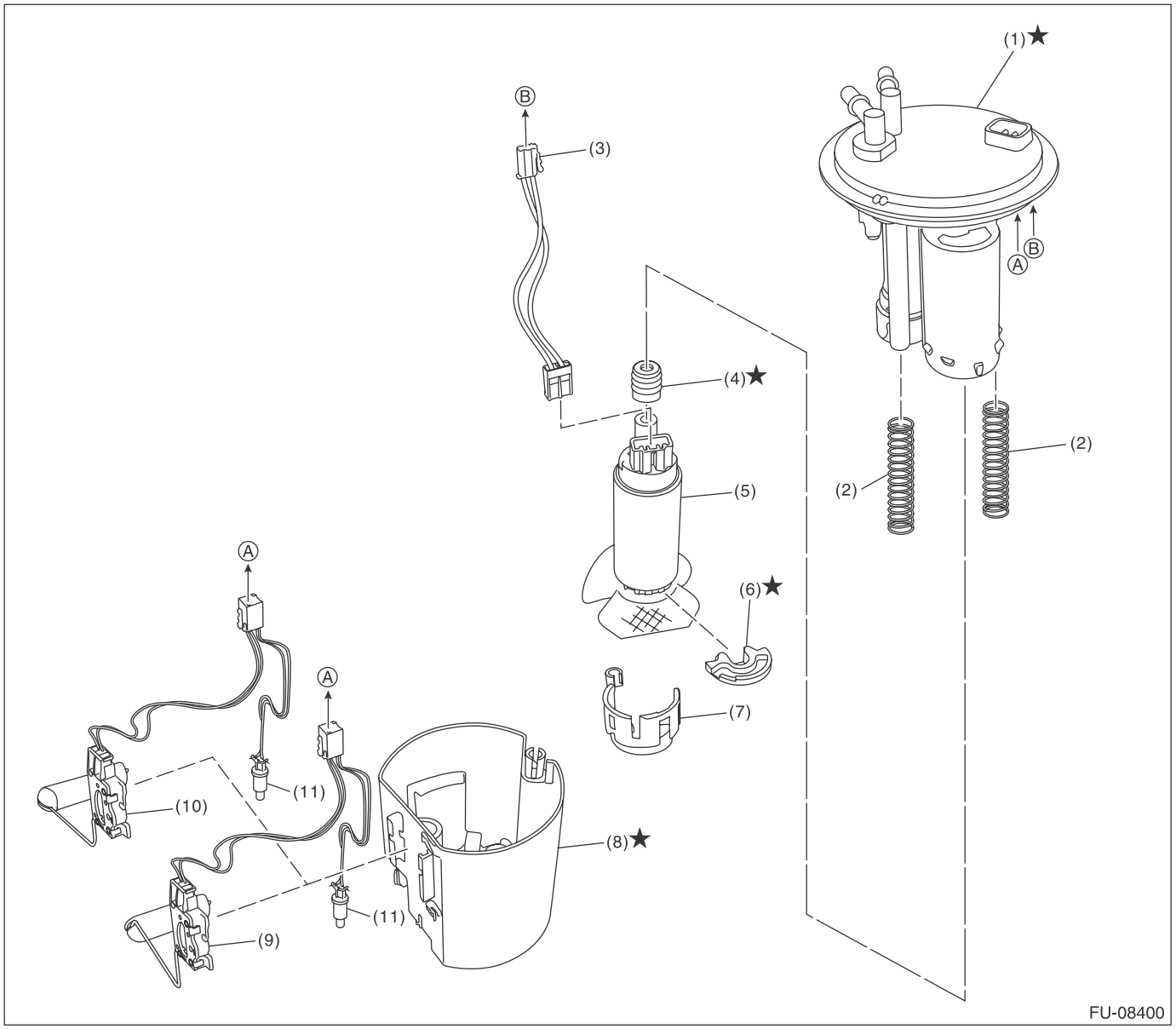

(1) Fuel filter assembly
(2) Pump module spring
(3) Fuel pump harness
(4) Gasket spacer
(5) Fuel pump
(6) Support rubber cushion
(7) Fuel pump holder
(8) Fuel chamber ASSY
(9) Fuel level sensor (model with fuel level sensor bent in 3 locations)
(10) Fuel level sensor (model with fuel level sensor bent in 2 locations)
(11) Fuel temperature sensor

C: CAUTION

• Wear appropriate work clothing, including a cap, protective goggles and protective shoes when performing any work.
• Remove contamination including dirt and corrosion before removal, installation or disassembly.
• Keep the disassembled parts in order and protect them from dust and dirt.
• Before removal, installation or disassembly, be sure to clarify the failure. Avoid unnecessary removal, installation, disassembly and replacement.
• Vehicle components are extremely hot after driving. Be wary of receiving burns from heated parts.
• Be sure to tighten fasteners including bolts and nuts to the specified torque.
• Place shop jacks or rigid racks at the specified points.
• Before disconnecting connectors of sensors or units, be sure to disconnect the ground cable from battery.
• Place “NO OPEN FLAMES” signs near the working area.
• Prepare a container and cloth to prevent scattering of fuels when performing work where fuels can be spilled. If the oil spills, wipe it off immediately to prevent from penetrating into floor or flowing out for environmental protection.
• Follow all government and local regulations concerning disposal of refuse when disposing fuel.

D: PREPARATION TOOL

1. SPECIAL TOOL

ILLUSTRATION	TOOL NUMBER	DESCRIPTION	REMARKS
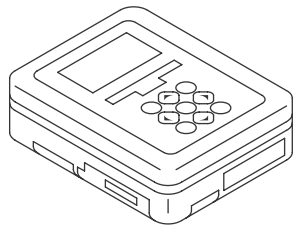 ST1B022XU0	1B022XU0	SUBARU SELECT MONITOR III KIT	Used for draining fuel and each inspection.
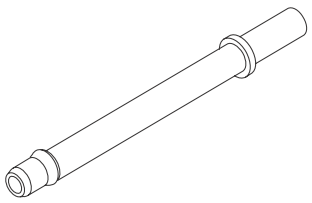 ST18471AA000	18471AA000	FUEL PIPE ADAPTER	Used for draining fuel.
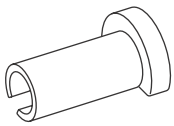 ST42099AE000	42099AE000	QUICK CONNECTOR RELEASE	Used for disconnecting quick connector of the engine compartment.

2. GENERAL TOOL

TOOL NAME	REMARKS
Circuit tester	Used for measuring resistance and voltage.
Oscilloscope	Used for inspecting the waveform of each sensor.

2. Throttle Body

A: REMOVAL

1) Disconnect the ground cable from battery.

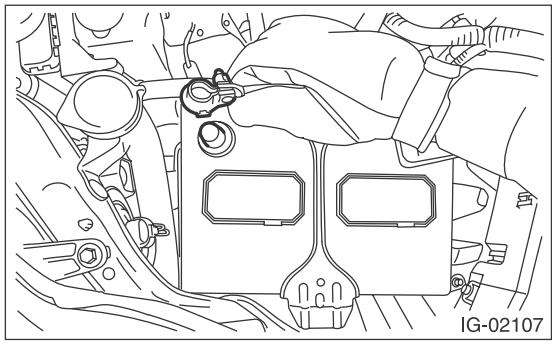

2) Remove the air intake boot assembly. <Ref. to IN(H4SO)-8, REMOVAL, Air Intake Boot.>
3) Disconnect the throttle position sensor connector (A).
4) Remove the bolts (B) which secure the throttle body to the multi-function duct assembly, and remove the throttle body.

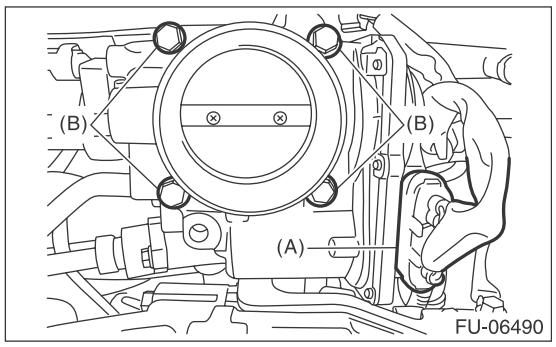

B: INSTALLATION

Install in the reverse order of removal.

NOTE:
Use a new gasket.

Tightening torque:
8 N·m (0.8 kgf-m, 5.9 ft-lb)

C: INSPECTION

1. THROTTLE SENSOR (METHOD WITH CIRCUIT TESTER)

1) Remove the glove box lid assembly, glove box lower cover, instrument panel side cover LH and glove box back panel. <Ref. to EI-65, REMOVAL, Glove Box.>
2) Turn the ignition switch to ON. (engine OFF)
3) Measure the voltage between ECM connector terminals.

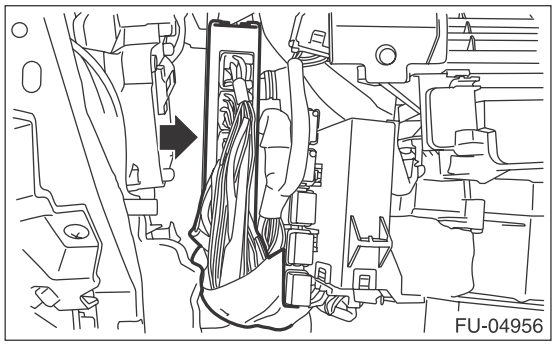

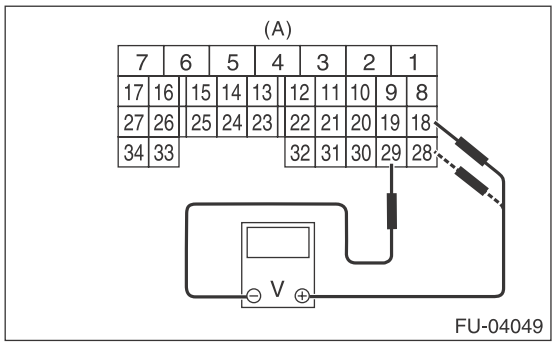

(A) To ECM connector

Throttle sensor	Accelerator pedal	Terminal No.	Standard
Main	Not depressed (Full closed)	18 (+) and 29 (–)	Approx. 0.6 V
	Depressed (Full opened)		Approx. 3.96 V
Sub	Not depressed (Full closed)	28 (+) and 29 (–)	Approx. 1.48 V
	Depressed (Full opened)		Approx. 4.17 V

4) After inspection, install the related parts in the reverse order of removal.

2. THROTTLE SENSOR (METHOD WITH SUBARU SELECT MONITOR)

1) Turn the ignition switch to ON. (engine OFF)
2) Read the throttle opening angle signal and voltage of throttle sensor using Subaru Select Monitor. <Ref. to EN(H4SO)(diag)-34, READ CURRENT DATA FOR ENGINE (NORMAL MODE), OPERATION, Subaru Select Monitor.>

Throttle sensor	Throttle opening angle signal	Standard
Main	0.0 %	Approx. 0.6 V
	100.0 %	Approx. 3.96 V
Sub	0.0 %	Approx. 1.48 V
	100.0 %	Approx. 4.17 V

3. OTHER INSPECTIONS

1) Check that the throttle body has no deformation, cracks or other damages.
2) Check that the engine coolant hose has no cracks, damage or loose part.

3. Intake Manifold

A: REMOVAL

1. INTAKE MANIFOLD

1) Release the fuel pressure. <Ref. to FU(H4SO)-46, RELEASING OF FUEL PRESSURE, PROCEDURE, Fuel.>
2) Disconnect the ground cable from battery.

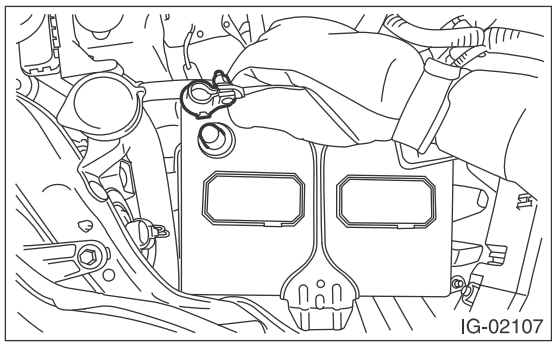

3) Open the fuel filler lid and remove the fuel filler cap.
4) Remove the air intake boot assembly. <Ref. to IN(H4SO)-8, REMOVAL, Air Intake Boot.>
5) Disconnect the connector (A) from the ignition coil of #3 cylinder.
6) Disconnect the PCV hose (B) from the rocker cover RH.

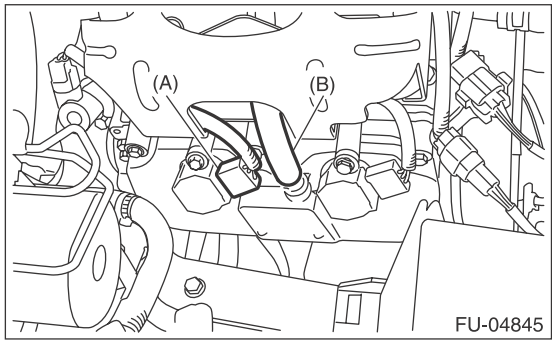

7) Remove the intake manifold protector RH.

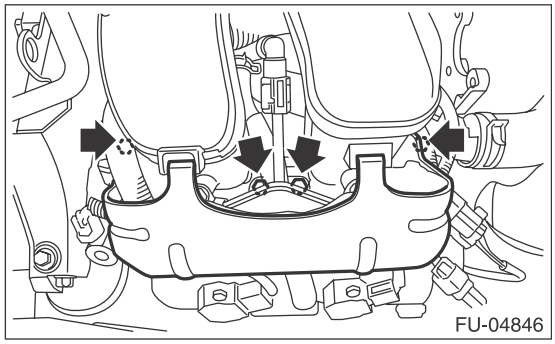

8) Disconnect the fuel injector connectors (A).
9) Disconnect the fuel delivery pipe (B) from fuel gallery RH.

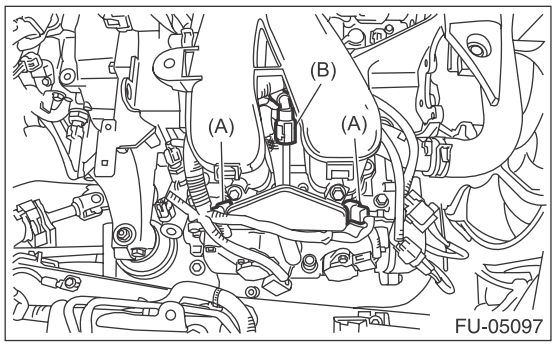

10) Disconnect the fuel delivery hose (A) and evaporation hose (B).

CAUTION:
- **Be careful not to spill fuel.**
- **Catch the fuel from hoses using a container or cloth.**

(1) Attach ST to the fuel delivery pipe and push ST in the direction of arrow mark to disconnect the quick connector of the fuel delivery hose (A).

ST 42099AE000 QUICK CONNECTOR RELEASE

(2) Remove the clip and disconnect the evaporation hose (B) from the pipe.

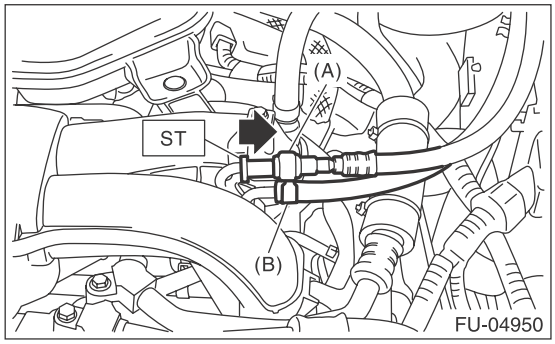

11) Remove the generator cable clip (A) from the intake manifold protector LH.
12) Remove the oil filler pipe (B) from the rocker cover LH.
13) Disconnect the brake booster vacuum hose (C).

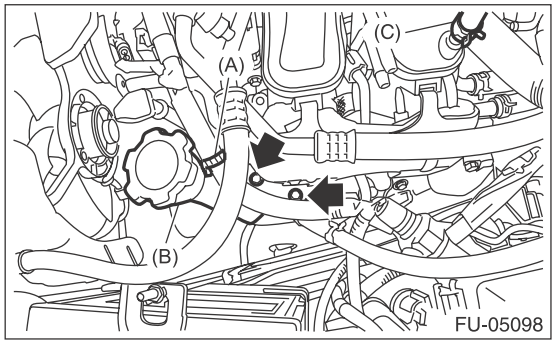

14) Disconnect the connector (A) from the ignition coil of #2 cylinder.
15) Disconnect the PCV hose (B) from the rocker cover LH.

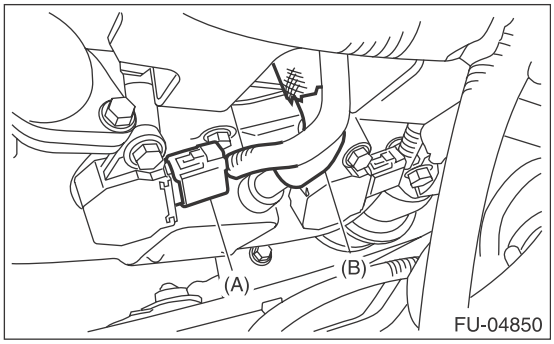

16) Remove the intake manifold protector LH.

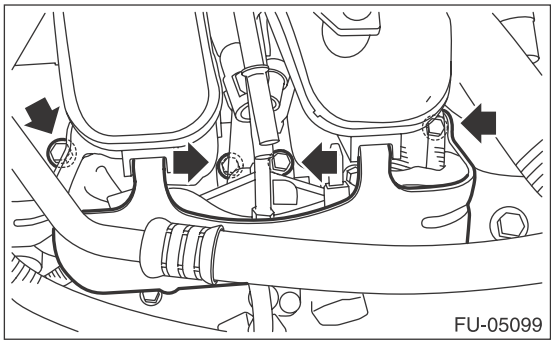

17) Disconnect the fuel injector connectors (A) and disconnect the fuel delivery pipe (B) from fuel gallery LH.

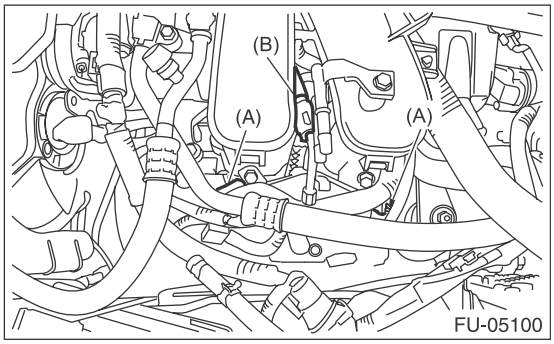

18) Remove the clip (A) which holds the engine harness to intake manifold.
19) Remove the bolts (B) on the LH side which secure the multi-function duct assembly to intake manifold.

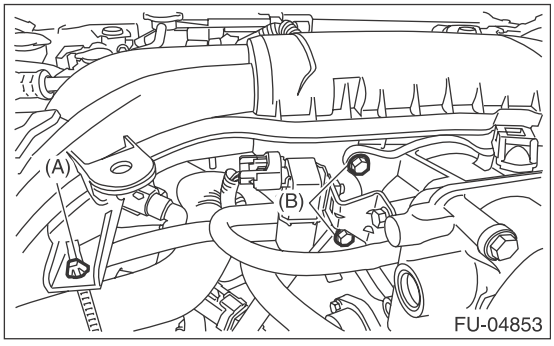

20) Remove the bolt (A) on RH side securing multifunction duct assembly to the intake manifold.

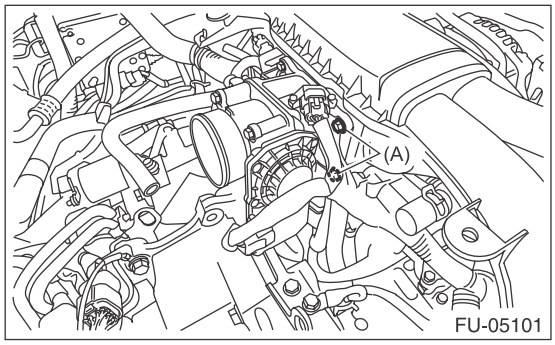

21) Remove the intake manifold from cylinder head.
22) Remove the fuel gallery RH and fuel injector from the intake manifold.

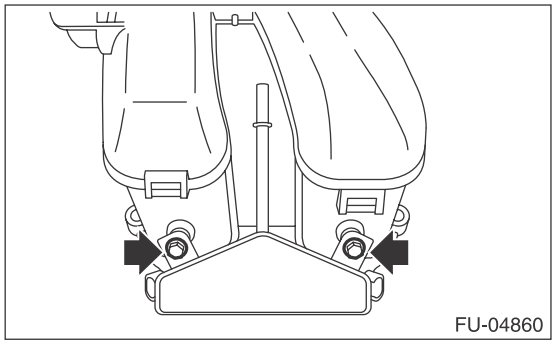

23) Remove the fuel gallery LH, fuel pipe and fuel injector from the intake manifold.

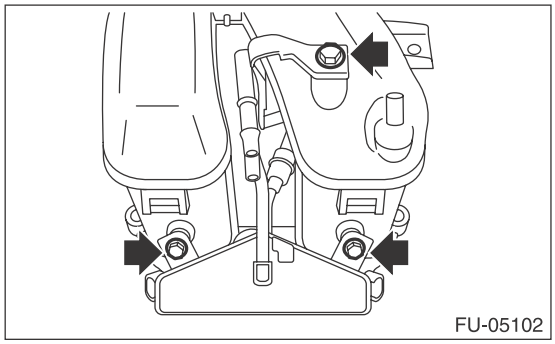

2. MULTI-FUNCTION DUCT ASSEMBLY

1) Release the fuel pressure. <Ref. to FU(H4SO)-46, RELEASING OF FUEL PRESSURE, PROCEDURE, Fuel.>
2) Disconnect the ground cable from battery.

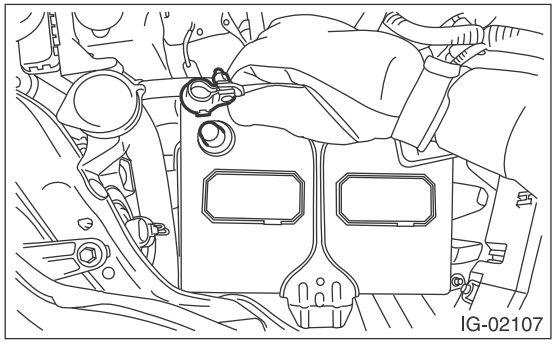

3) Open the fuel filler lid and remove the fuel filler cap.
4) Lift up the vehicle.
5) Remove the under cover. <Ref. to EI-35, REMOVAL, Front Under Cover.>
6) Drain approximately 3.0 ℓ (3.2 US qt, 2.6 Imp qt) of engine coolant. <Ref. to CO(H4SO)-14, DRAINING OF ENGINE COOLANT, REPLACEMENT, Engine Coolant.>
7) Lower the vehicle.
8) Remove the intake manifold. <Ref. to FU(H4SO)-16, INTAKE MANIFOLD, REMOVAL, Intake Manifold.>
9) Remove the bolt, and disconnect the bulkhead harness connector from the engine harness connector and rear engine hanger.

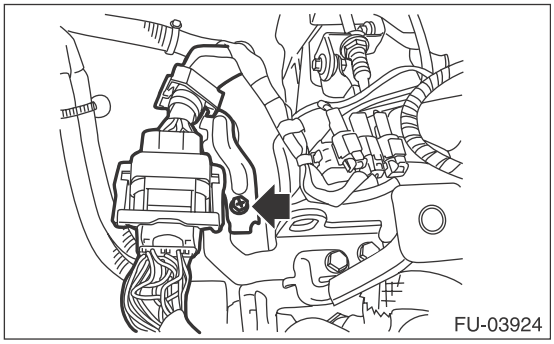
FU-03924

10) Slide the engine harness connector in the direction of the arrow and remove it from the rear engine hanger.

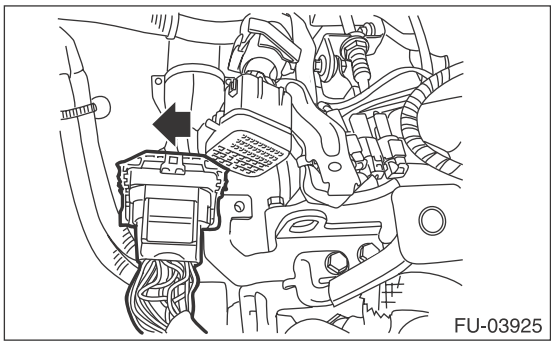
FU-03925

11) Disconnect the connector from knock sensor.

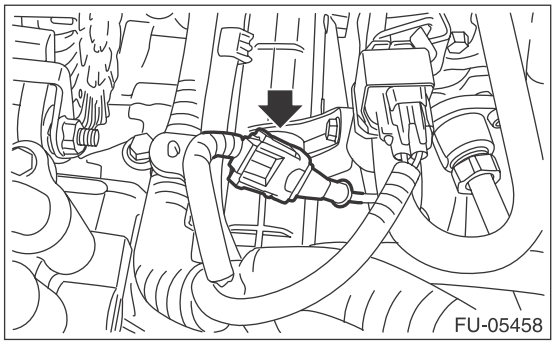
FU-05458

12) Disconnect the water hose (A) and EGR pipe (B) from the LH side of multi-function duct assembly.

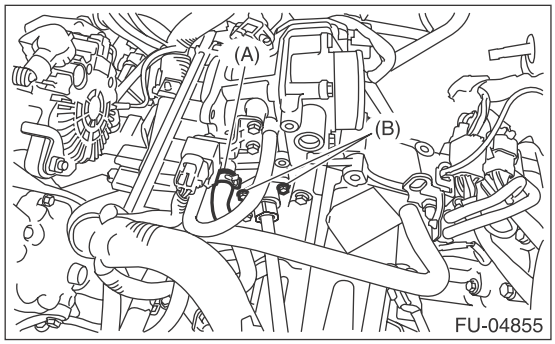

FU-04855

13) Disconnect the PCV hose (A) and water hose (B) from the RH side of multi-function duct assembly.

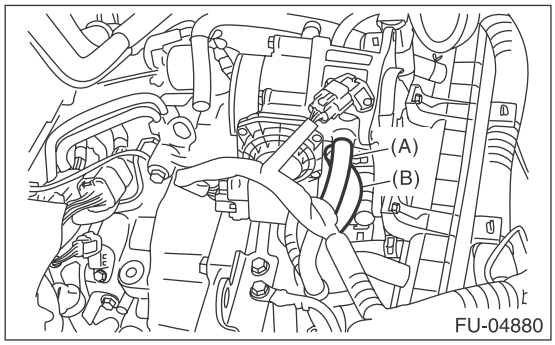

FU-04880

14) Disconnect the connectors from the engine coolant temperature sensor (A), oil pressure switch (B) and crankshaft position sensor (C).

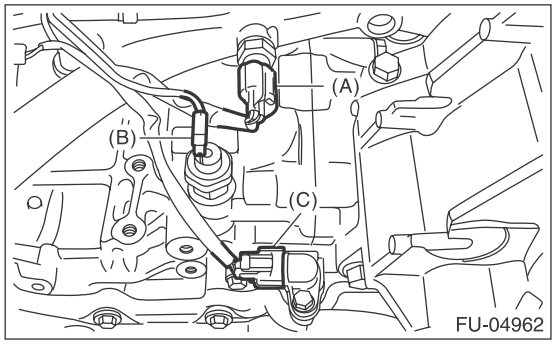

FU-04962

15) Disconnect the connectors from front oxygen (A/F) sensor (A) and rear oxygen sensor (B).
16) Disconnect the connector (C) from the ignition coil of #1 cylinder.
17) Disconnect the connectors from oil switching solenoid valve RH (D), oil temperature sensor RH (E) and variable valve lift diagnosis switch (F), and remove the bolt to detach the ground terminal (G).

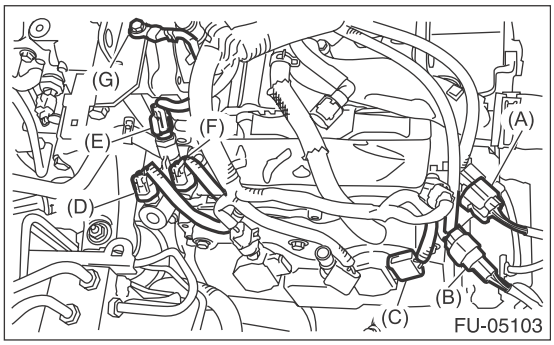

18) Slide the front oxygen (A/F) sensor connector and rear oxygen sensor connector in the direction of the arrow and remove them from the bracket.

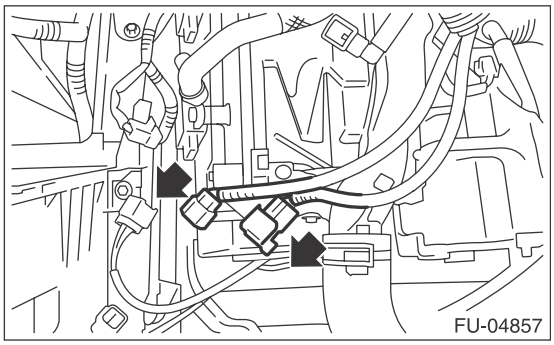

19) Disconnect the connector from the ignition coil of #4 cylinder.
20) Disconnect the connectors from the oil switching solenoid valve LH (A) and camshaft position sensor LH (B).

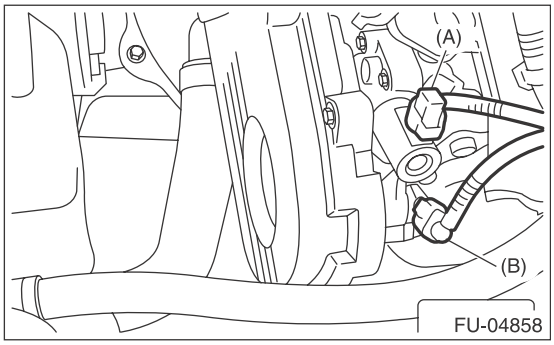

21) Remove the PCV pipe, multi-function duct assembly and engine harness as a single unit from the engine.

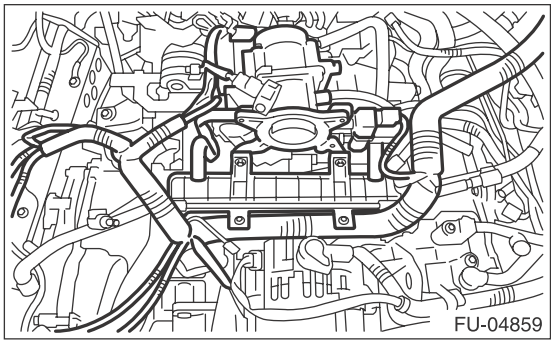

22) Remove the bolts (A) and remove the multi-function duct assembly from the PCV pipe.

23) Remove the clips (B) and remove the engine harness from the PCV pipe.

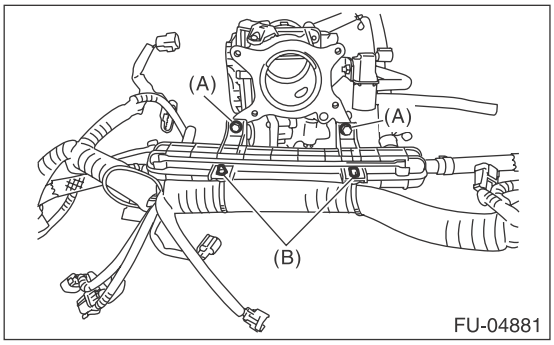

B: INSTALLATION

1. INTAKE MANIFOLD

1) Install in the reverse order of removal.

Tightening torque:
T1: 6.4 N·m (0.7 kgf-m, 4.7 ft-lb)
T2: 19 N·m (0.9 kgf-m, 14.0 ft-lb)

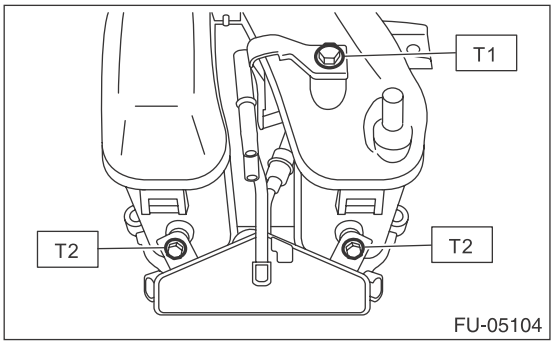

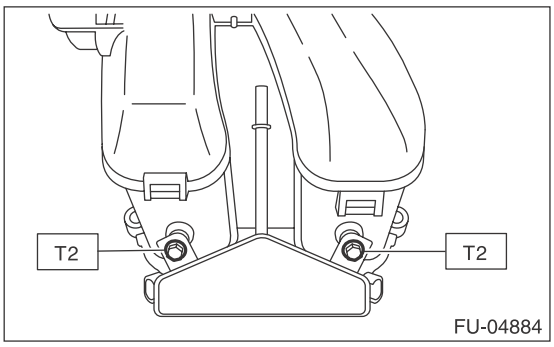

NOTE:
Use a new gasket.

Tightening torque:
6.4 N·m (0.7 kgf-m, 4.7 ft-lb)

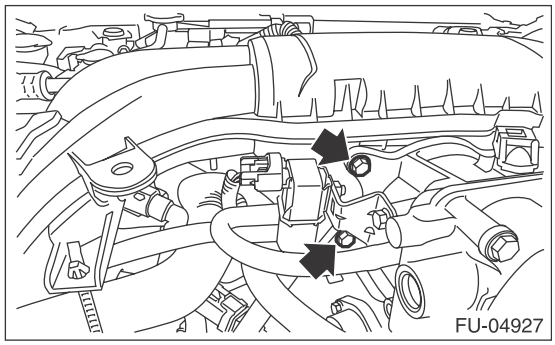
FU-04927

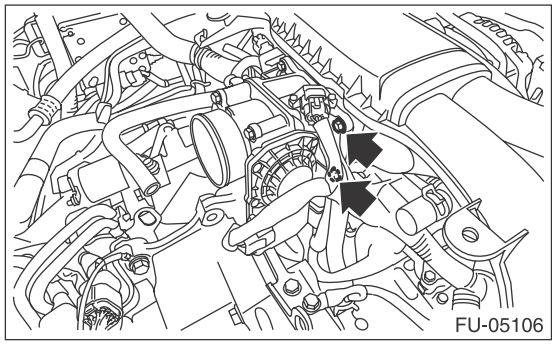
FU-05106

NOTE:
Use a new gasket.

Tightening torque:
25 N·m (2.5 kgf-m, 18.4 ft-lb)

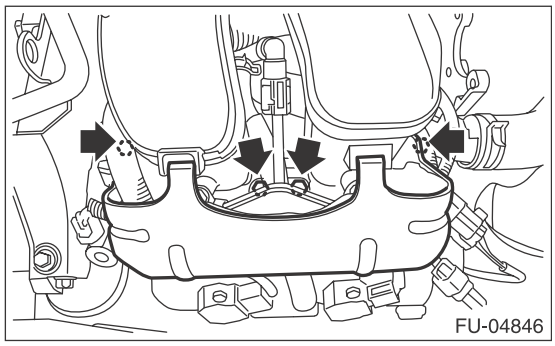
FU-04846

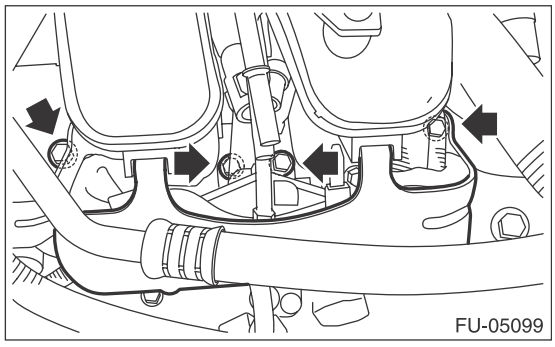
FU-05099

NOTE:
Use a new gasket.

Tightening torque:
6.4 N·m (0.7 kgf-m, 4.7 ft-lb)

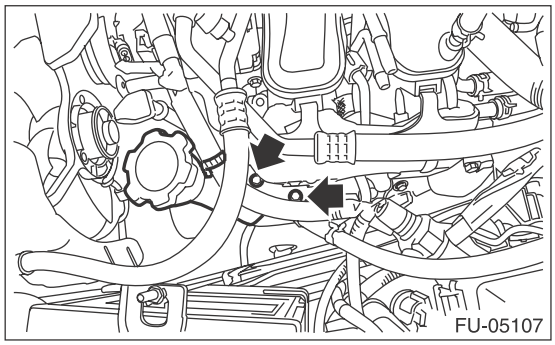
FU-05107

2. MULTI-FUNCTION DUCT ASSEMBLY

1) Install in the reverse order of removal.

NOTE:
Use a new gasket.

Tightening torque:
6.4 N·m (0.7 kgf-m, 4.7 ft-lb)

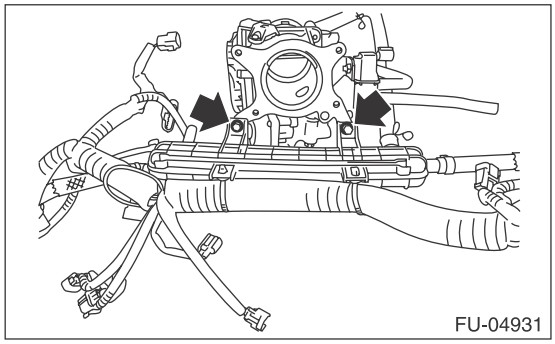
FU-04931

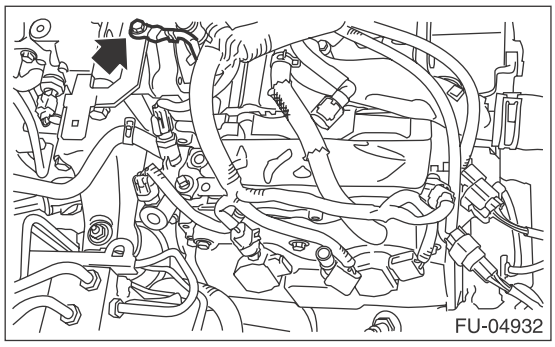
FU-04932

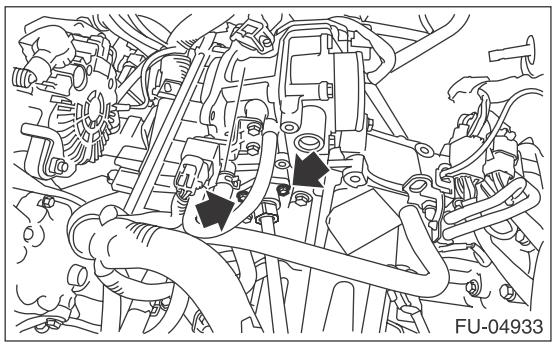
FU-04933

C: INSPECTION

1) Check that the intake manifold and fuel pipe have no deformation, cracks and other damages.
2) Check that the hose has no cracks, damage or loose part.

4. Engine Coolant Temperature Sensor

A: REMOVAL

1) Disconnect the ground cable from battery.

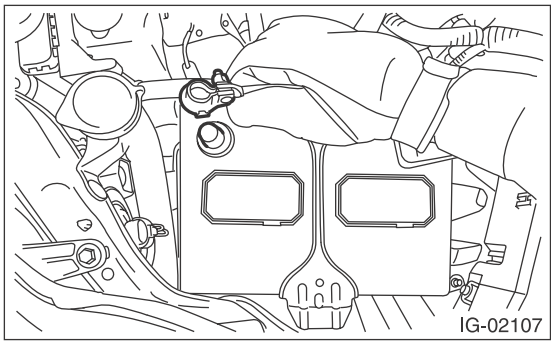

2) Remove the generator. <Ref. to SC(H4SO)-18, REMOVAL, Generator.>
3) Drain engine coolant. <Ref. to CO(H4SO)-14, DRAINING OF ENGINE COOLANT, REPLACEMENT, Engine Coolant.>
4) Disconnect the connector from the engine coolant temperature sensor, and remove the engine coolant temperature sensor.

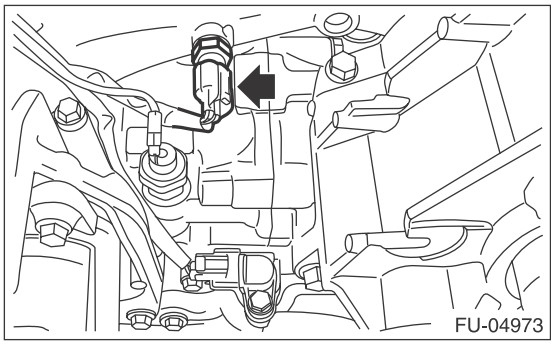

B: INSTALLATION

Install in the reverse order of removal.

NOTE:
Use a new gasket.

Tightening torque:
18 N·m (1.8 kgf-m, 13.3 ft-lb)

C: INSPECTION

1) Check that the engine coolant temperature sensor has no deformation, cracks or other damages.
2) Immerse the engine coolant temperature sensor and a thermometer in water.

CAUTION:
Take care not to allow water to get into the engine coolant temperature sensor connector. Completely remove any water inside.

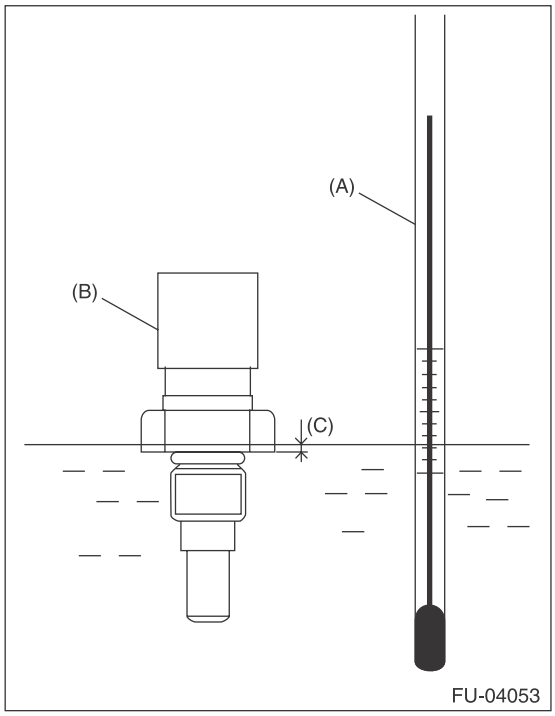

(A) Thermometer
(B) Engine coolant temperature sensor
(C) Hexagonal part height: To approx. $^{1}/_{3}$

3) Raise water temperature gradually, measure the resistance between the engine coolant temperature sensor terminals when the temperature is 20°C (68°F) and 80°C (176°F).

NOTE:
Agitate the water for even temperature distribution.

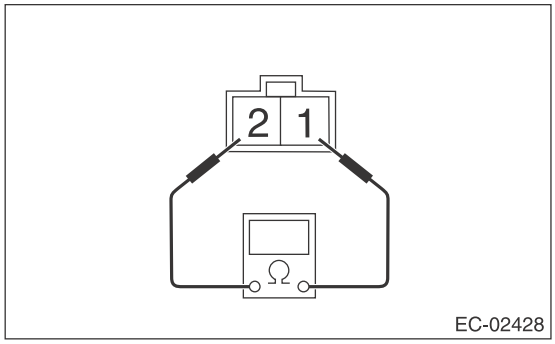

Water temperature	Terminal No.	Standard
20°C (68°F)	1 and 2	2.45±0.2 kΩ
80°C (176°F)		0.318±0.013 kΩ

5. Crankshaft Position Sensor

A: REMOVAL

1) Disconnect the ground cable from battery.

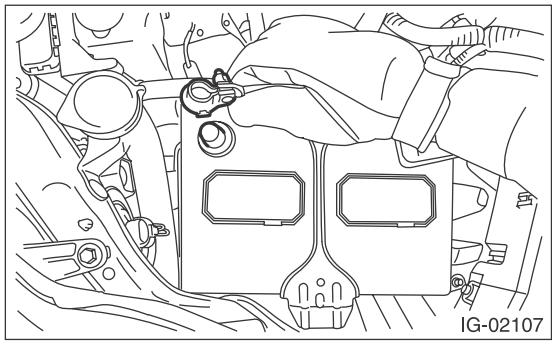

2) Remove the bolt which secures crankshaft position sensor to oil pump.

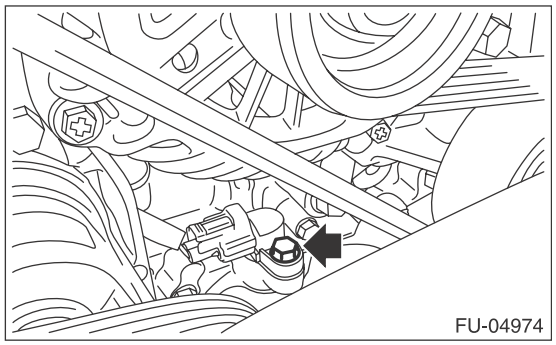

3) Remove the crankshaft position sensor, and disconnect the connector from the crankshaft position sensor.

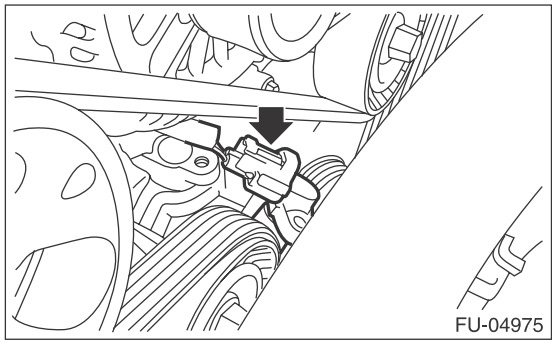

B: INSTALLATION

Install in the reverse order of removal.

Tightening torque:
6.4 N·m (0.7 kgf-m, 4.7 ft-lb)

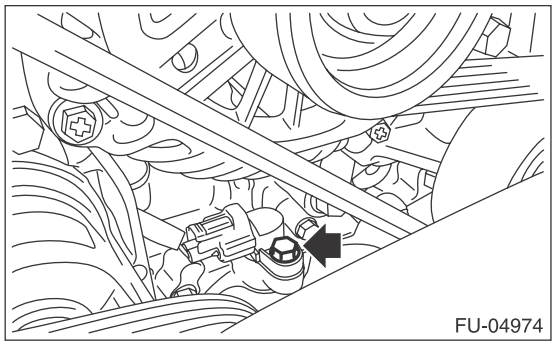

C: INSPECTION

1. CRANKSHAFT POSITION SENSOR (METHOD WITH CIRCUIT TESTER)

1) Measure the resistance between crankshaft position sensor terminals.

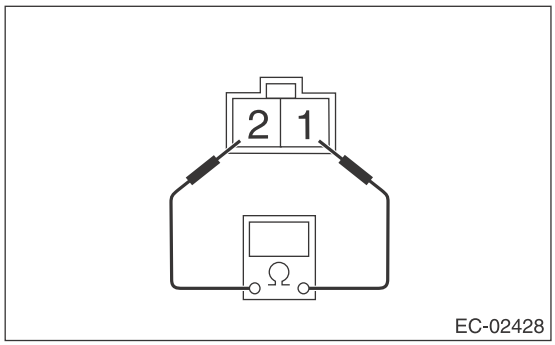

Terminal No.	Standard
1 and 2	2.04±0.204 kΩ

2. CRANKSHAFT POSITION SENSOR (METHOD WITH OSCILLOSCOPE)

1) Prepare an oscilloscope.
2) Remove the glove box lid assembly, glove box lower cover, instrument panel side cover LH and glove box back panel. <Ref. to EI-65, REMOVAL, Glove Box.>

3) Connect the probe to ECM connector.

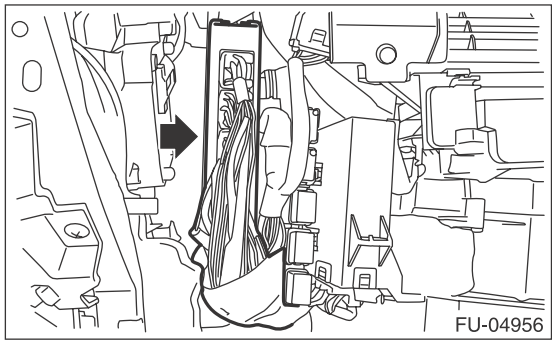

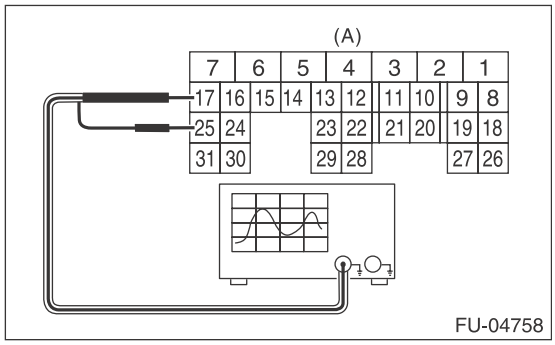

(A) To ECM connector

Terminal No.	Probe
17	+
25	–

4) Start the engine and let it idle.
5) Check that the pattern is the same as the waveform and voltage shown below.

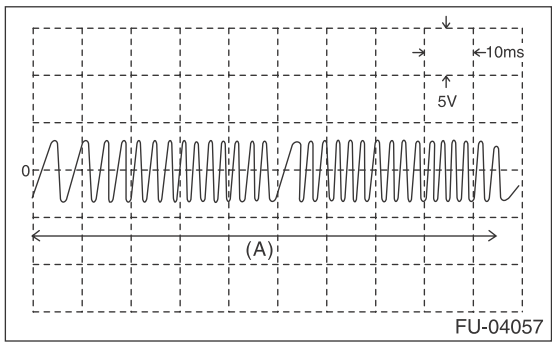

(A) One crankshaft rotation

6) After inspection, install the related parts in the reverse order of removal.

3. OTHER INSPECTIONS

Check that the crankshaft position sensor has no deformation, cracks or other damages.

6. Camshaft Position Sensor

A: REMOVAL

1) Disconnect the ground cable from battery.

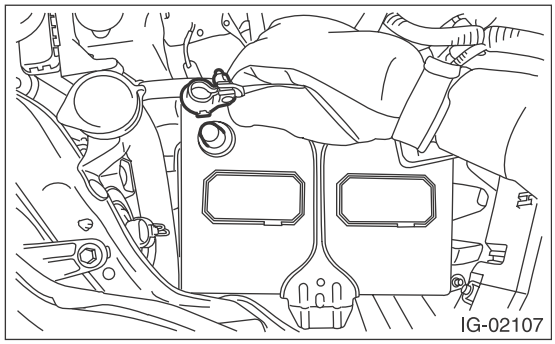

2) Disconnect the connector from camshaft position sensor.

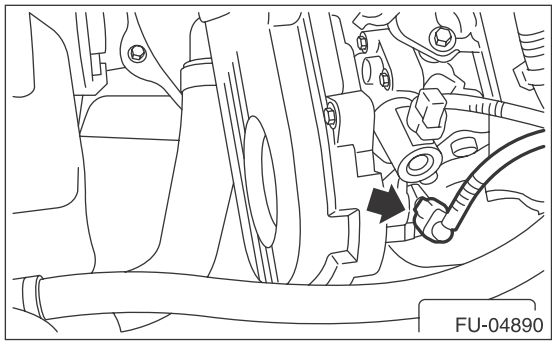

3) Remove the bolt which secures camshaft position sensor to camshaft position sensor support.

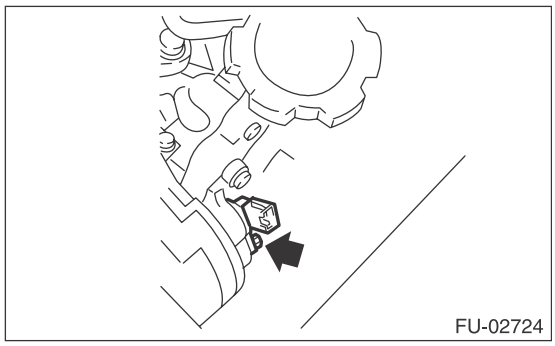

4) Remove the bolt which secures camshaft position sensor support to camshaft cap LH.

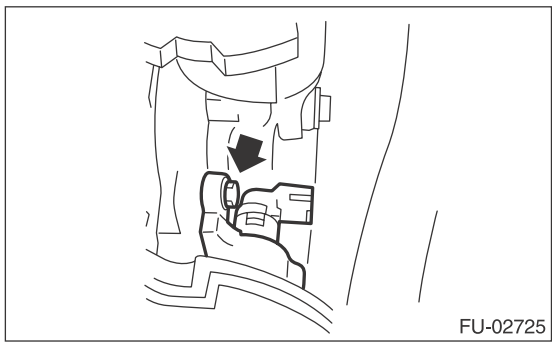

5) Remove the camshaft position sensor and the camshaft position sensor support as a unit.

6) Remove the camshaft position sensor from the camshaft position sensor support.

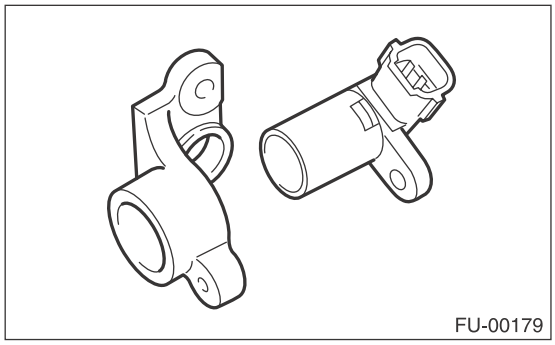

B: INSTALLATION

Install in the reverse order of removal.

Tightening torque:
Camshaft position sensor support
6.4 N·m (0.7 kgf-m, 4.7 ft-lb)
Camshaft position sensor
6.4 N·m (0.7 kgf-m, 4.7 ft-lb)

C: INSPECTION

1. CAMSHAFT POSITION SENSOR (METHOD WITH OSCILLOSCOPE)

1) Prepare an oscilloscope.
2) Remove the glove box lid assembly, glove box lower cover, instrument panel side cover LH and glove box back panel. <Ref. to EI-65, REMOVAL, Glove Box.>
3) Connect the probe to ECM connector.

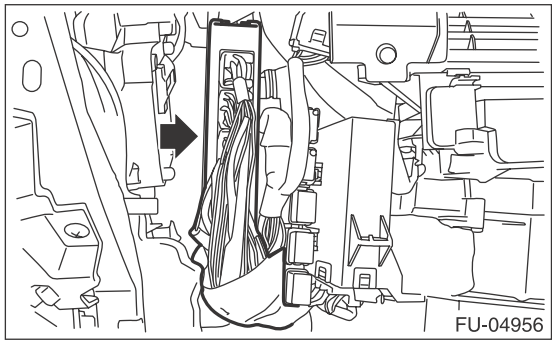

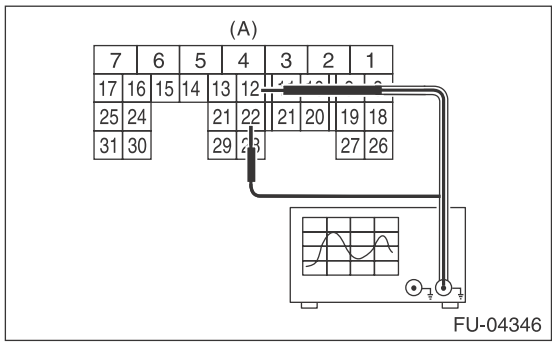

(A) To ECM connector

Terminal No.	Probe
12	+
22	–

4) Start the engine and let it idle.
5) Check that the pattern is the same as the waveform and voltage shown below.

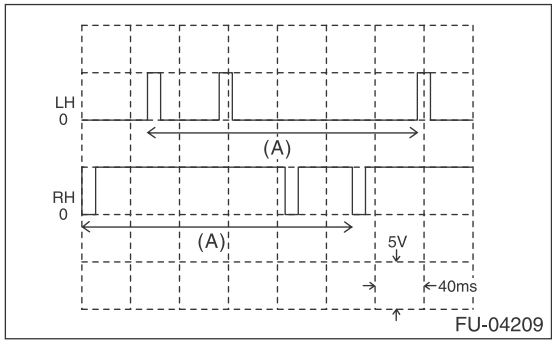

(A) One camshaft rotation

6) After inspection, install the related parts in the reverse order of removal.

2. OTHER INSPECTIONS

Check that the camshaft position sensor has no deformation, cracks or other damages.

7. Knock Sensor

A: REMOVAL

1) Disconnect the ground cable from battery.

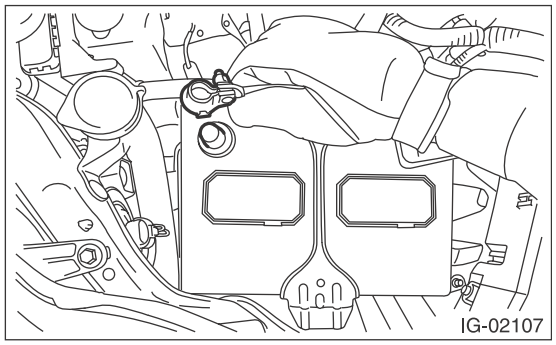

2) Remove the air intake boot assembly. <Ref. to IN(H4SO)-8, REMOVAL, Air Intake Boot.>
3) Disconnect the knock sensor connector.

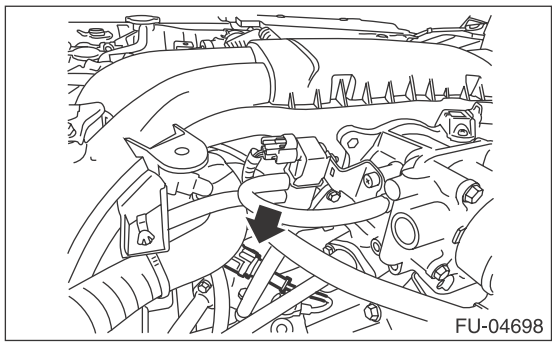

4) Remove the knock sensor from cylinder block.

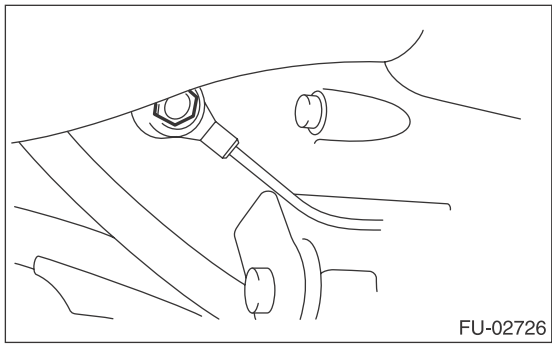

B: INSTALLATION

1) Install the knock sensor to the cylinder block.

NOTE:
The portion of the knock sensor cord that is pulled out must be positioned at a 60° angle relative to the engine rear.

Tightening torque:
24 N·m (2.4 kgf-m, 17.7 ft-lb)

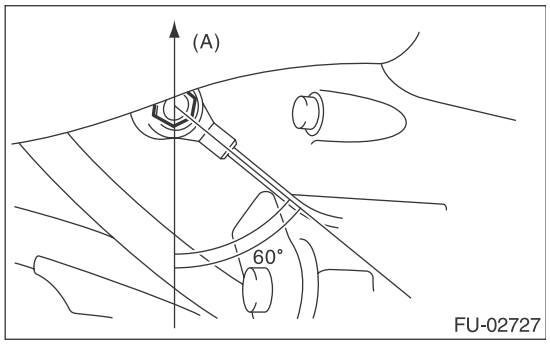

(A) Front side of vehicle

2) Connect the knock sensor connector.

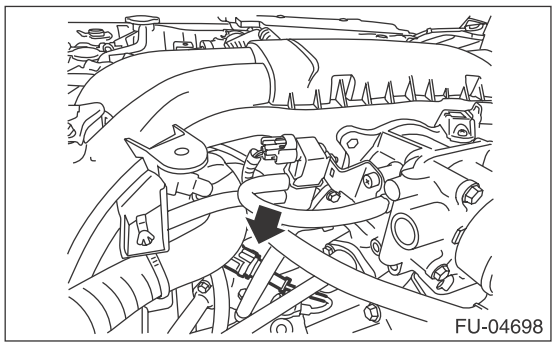

3) Install the air intake boot assembly. <Ref. to IN(H4SO)-8, INSTALLATION, Air Intake Boot.>
4) Connect the ground cable to battery.

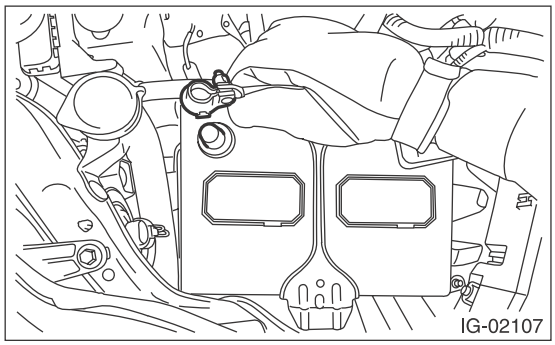

C: INSPECTION

1) Check that the knock sensor has no deformation, cracks or other damages.
2) Measure the resistance between knock sensor terminals.

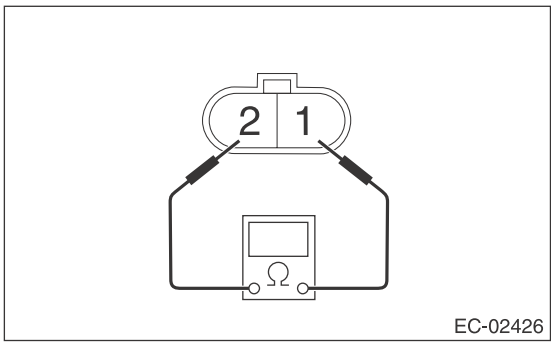

Terminal No.	Standard
1 and 2	560±28 kΩ

8. Throttle Position Sensor

A: SPECIFICATION

Throttle body is a non-disassembled part, so do not remove the throttle position sensor from throttle body.
Refer to “Throttle Body” for removal and installation procedure. <Ref. to FU(H4SO)-14, REMOVAL, Throttle Body.> <Ref. to FU(H4SO)-14, INSTALLATION, Throttle Body.>

9. Mass Air Flow and Intake Air Temperature Sensor

A: REMOVAL

1) Disconnect the ground cable from battery.

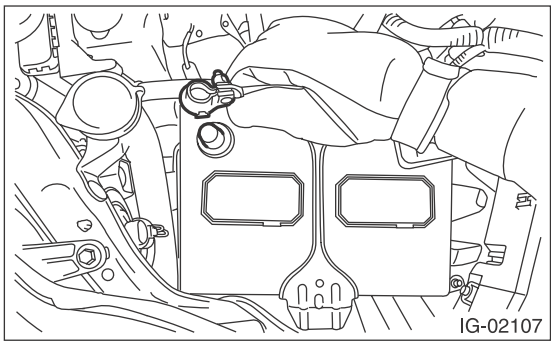

2) Disconnect the connector from the mass air flow and intake air temperature sensor, and remove the mass air flow and intake air temperature sensor.

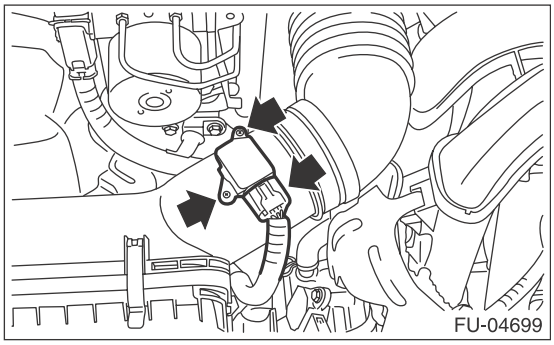

B: INSTALLATION

Install in the reverse order of removal.

Tightening torque:
1 N·m (0.1 kgf-m, 0.7 ft-lb)

C: INSPECTION

1. CHECK MASS AIR FLOW SENSOR UNIT

1) Connect battery positive terminal to terminal No. 3 and battery ground terminal to terminal No. 4, circuit tester positive terminal to terminal No. 5 and the circuit tester negative terminal to terminal No. 4.

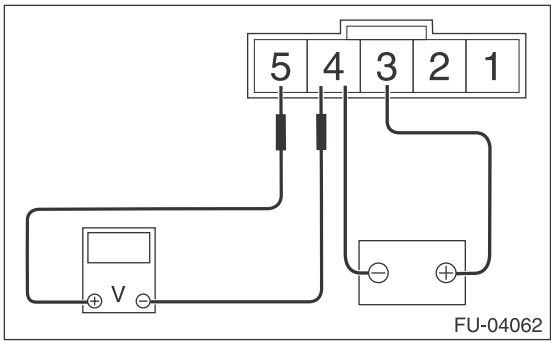

2) Check that the voltage changes when air is blown to the mass air flow sensor unit from arrow direction.

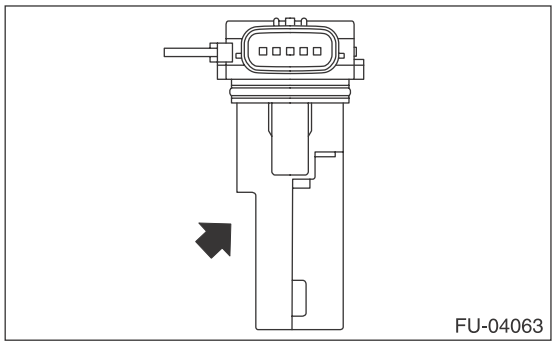

2. CHECK INTAKE AIR TEMPERATURE SENSOR UNIT

Measure the resistance between intake air temperature sensor terminals.

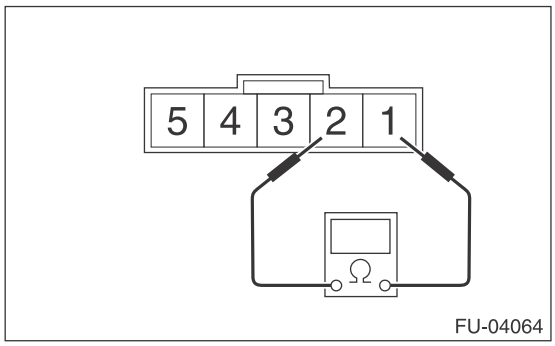

Temperature	Terminal No.	Standard
–20°C (–4°F)	1 and 2	16.0±2.4 kΩ
20°C (68°F)		2.45±0.24 kΩ
60°C (140°F)		0.58±0.087 kΩ

3. OTHER INSPECTIONS

1) Check that the mass air flow and intake air temperature sensor has no deformation, cracks or other damages.
2) Check that the mass air flow and intake air temperature sensor has no dirt.

10. Manifold Absolute Pressure Sensor

A: REMOVAL

1) Disconnect the ground cable from battery.

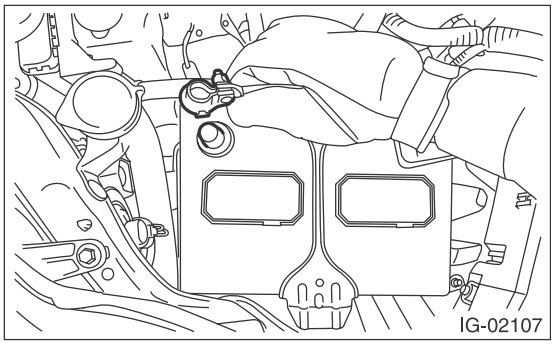

2) Remove the air intake boot assembly. <Ref. to IN(H4SO)-8, REMOVAL, Air Intake Boot.>
3) Disconnect the connector from the manifold absolute pressure sensor and remove the manifold absolute pressure sensor from throttle body.

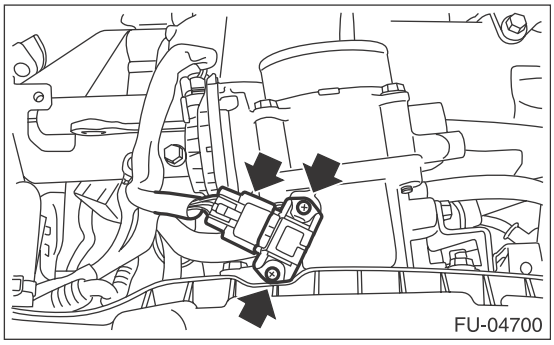

B: INSTALLATION

Install in the reverse order of removal.

NOTE:
Use new O-rings.

Tightening torque:
2 N·m (0.2 kgf-m, 1.5 ft-lb)

C: INSPECTION

1) Check that the manifold absolute pressure sensor has no deformation, cracks or other damages.
2) Connect dry-cell battery positive terminal to terminal No. 3 and dry-cell battery ground terminal to terminal No. 2, circuit tester negative terminal to terminal No. 2 and the circuit tester positive terminal to terminal No. 1.

NOTE:
- Use new dry-cell batteries.
- Using circuit tester, check the voltage of a single dry-cell battery is 1.6 V or more. And also check the voltage of three batteries in series is between 4.8 V and 5.2 V.

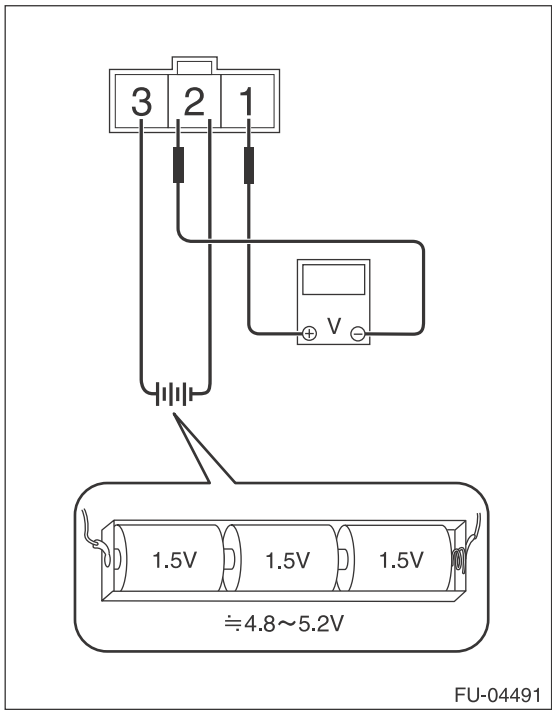

3) Connect the Mighty Vac to the pressure port (A) of manifold absolute pressure sensor.

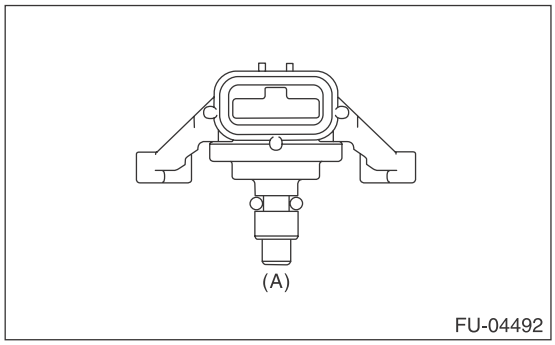

4) Check the voltage when generating vacuum and positive pressure using Mighty Vac.

CAUTION:
Do not apply vacuum of less than –88 kPa (–0.9 kgf/cm^2, –12.8 psi). Doing so may damage the manifold absolute pressure sensor.

NOTE:
When vacuum occurs at the pressure port of manifold absolute pressure sensor, the voltage will drop from the value as in step 3). When positive pressure occurs, on the other hand, the voltage will rise.

Pressure	Terminal No.	Standard
–88 kPa (–0.9 kgf/cm^2, –12.8 psi)	2 (+) and 1 (–)	Approx. 1 V (when 25°C (77°F))
–35 kPa (–0.4 kgf/cm^2, –5.1 psi)		Approx. 2.6 V (when 25°C (77°F))
19 kPa (–0.2 kgf/cm^2, 2.8 psi)		Approx. 4.2 V (when 25°C (77°F))

11.EGR Valve

A: REMOVAL

1) Disconnect the ground cable from battery.

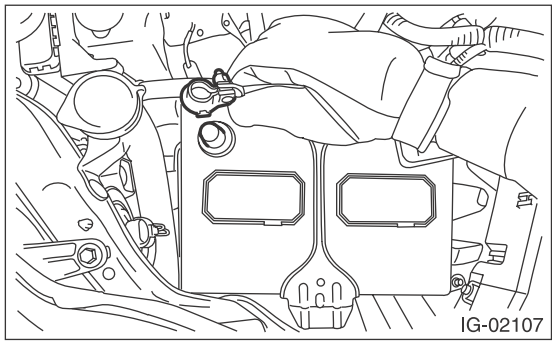

2) Remove the multi-function duct assembly. <Ref. to FU(H4SO)-17, MULTI-FUNCTION DUCT ASSEMBLY, REMOVAL, Intake Manifold.>
3) Remove the EGR valve from the multi-function duct assembly.

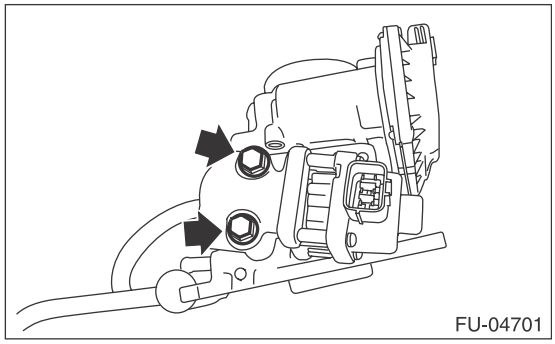

B: INSTALLATION

Install in the reverse order of removal.

NOTE:
Use a new gasket.

Tightening torque:
19 N·m (1.9 kgf-m, 14.0 ft-lb)

C: INSPECTION

1) Check that the EGR valve has no deformation, cracks or other damages.
2) Measure the resistance between EGR valve terminals.

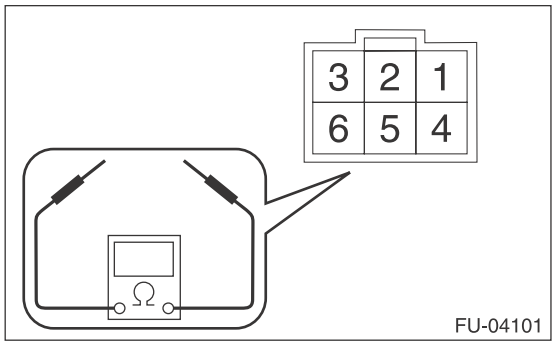

Terminal No.	Standard
2 and 1	22±2 Ω
2 and 3	22±2 Ω
5 and 4	22±2 Ω
5 and 6	22±2 Ω

12.Fuel Injector

A: REMOVAL

1) Release the fuel pressure. <Ref. to FU(H4SO)-46, RELEASING OF FUEL PRESSURE, PROCEDURE, Fuel.>
2) Disconnect the ground cable from battery.

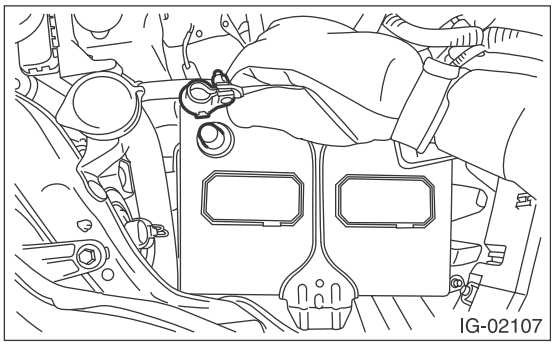

3) Open the fuel filler lid and remove the fuel filler cap.
4) Remove the intake manifold. <Ref. to FU(H4SO)-16, INTAKE MANIFOLD, REMOVAL, Intake Manifold.>
5) Remove the bolts securing the fuel gallery to intake manifold.

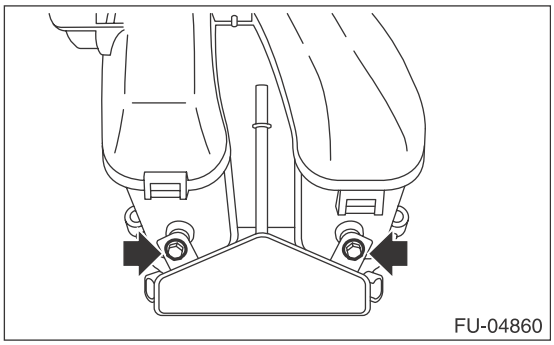

6) Remove the fuel injector while lifting up the fuel gallery.

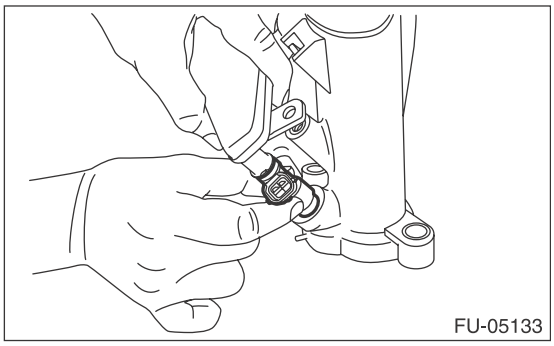

B: INSTALLATION

Install in the reverse order of removal.

NOTE:
Use new O-rings.

Tightening torque:
19 N·m (1.9 kgf-m, 14.0 ft-lb)

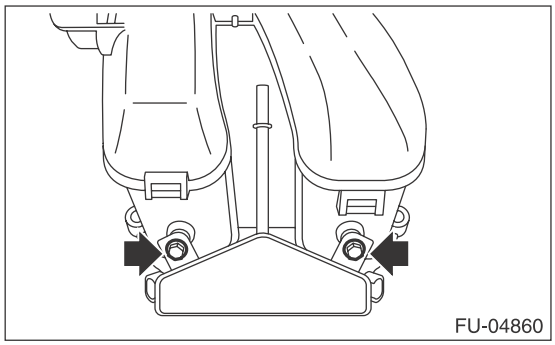

C: INSPECTION

1) Check that the fuel injector has no deformation, cracks or other damages.
2) Measure the resistance between fuel injector terminals.

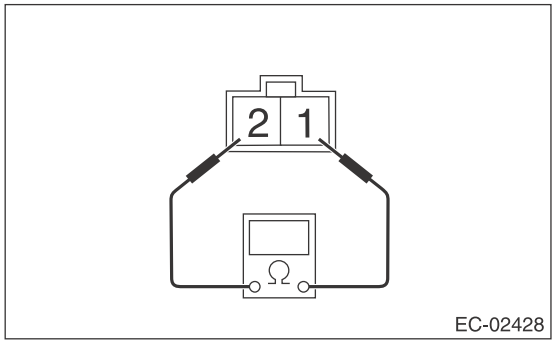

Terminal No.	Standard
1 and 2	Approx. 12.0 Ω (when 20°C (68°F))

13. Variable Valve Lift Diagnosis Oil Pressure Switch

A: REMOVAL

1) Disconnect the ground cable from battery.

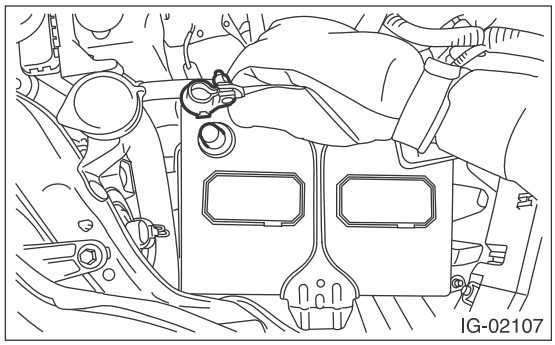

2) Remove the air intake boot assembly. <Ref. to IN(H4SO)-8, REMOVAL, Air Intake Boot.>
3) Disconnect the connector from the variable valve lift diagnosis oil pressure switch.
4) Remove the variable valve lift diagnosis oil pressure switch.

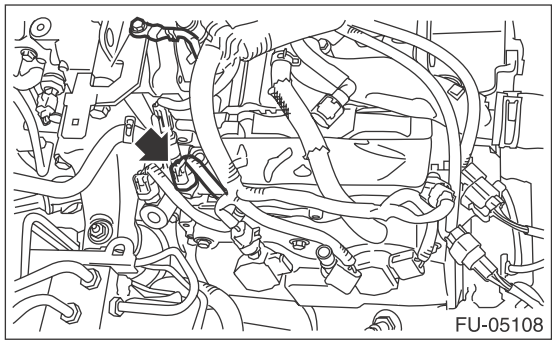

B: INSTALLATION

Install in the reverse order of removal.

NOTE:
Apply liquid gasket to the variable valve lift diagnosis oil pressure switch threads.

Liquid gasket:
THREE BOND 1324 (Part No. 004403042) or equivalent

Tightening torque:
17 N·m (1.7 kgf-m, 12.5 ft-lb)

C: INSPECTION

1) Check that the variable valve lift diagnosis oil pressure switch does not have deformation, cracks or damage.
2) Check the variable valve lift diagnosis oil pressure switch installation portion for oil leakage and oil seepage.

14.Oil Temperature Sensor

A: REMOVAL

1) Disconnect the ground cable from battery.

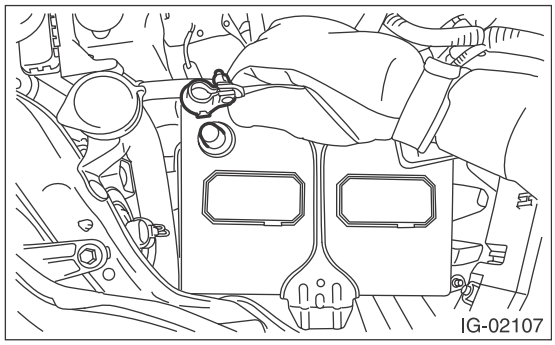

2) Remove the air intake boot assembly. <Ref. to IN(H4SO)-8, REMOVAL, Air Intake Boot.>
3) Disconnect the connector from oil temperature sensor.
4) Remove the oil temperature sensor.

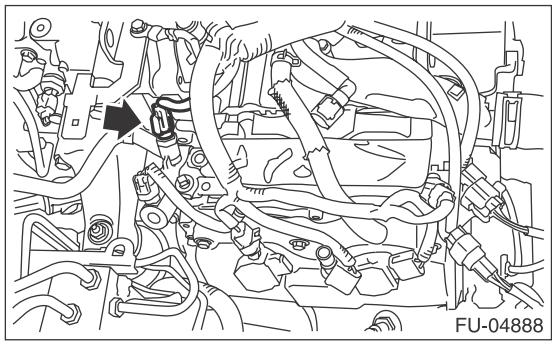

B: INSTALLATION

Install in the reverse order of removal.

NOTE:
Apply liquid gasket to the oil temperature sensor threads.

Liquid gasket:
THREE BOND 1324 (Part No. 004403042) or equivalent

Tightening torque:
18 N·m (1.8 kgf-m, 13.3 ft-lb)

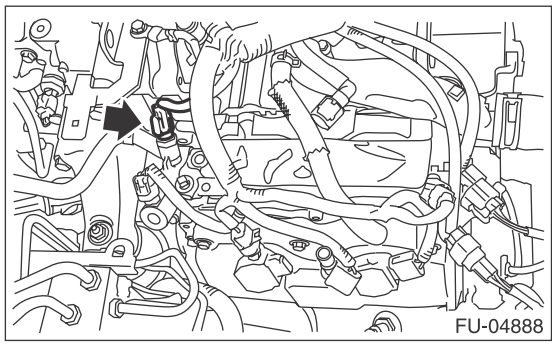

C: INSPECTION

1) Check that the oil temperature sensor has no deformation, cracks or other damages.
2) Measure the resistance between oil temperature sensor terminals.

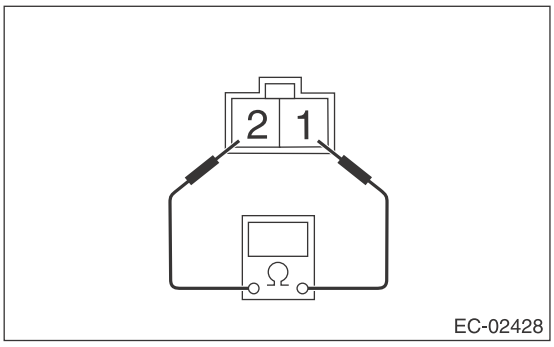

Terminal No.	Standard
1 and 2	2.45±0.2 (when 20°C (68°F))

15.Front Oxygen (A/F) Sensor

A: REMOVAL

1) Disconnect the ground cable from battery.

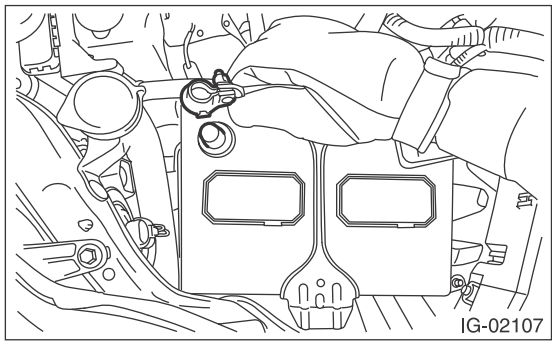

2) Remove the air intake duct. <Ref. to IN(H4SO)-9, REMOVAL, Air Intake Duct.>
3) Remove the clip (C) fastening the harness and disconnect the front oxygen (A/F) sensor connector (A).

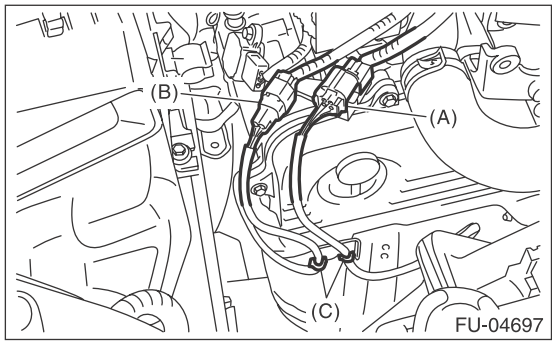

4) Lift up the vehicle.
5) Remove the under cover. <Ref. to EI-35, REMOVAL, Front Under Cover.>
6) Apply spray-type lubricant to the threaded portion of front oxygen (A/F) sensor, and leave it for one minute or more.
7) Remove the front oxygen (A/F) sensor.

CAUTION:
When removing the front oxygen (A/F) sensor, wait until exhaust pipe cools, otherwise it will damage the exhaust pipe.

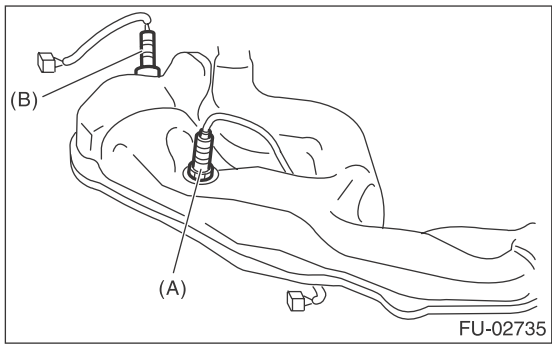

(A) Front oxygen (A/F) sensor
(B) Rear oxygen sensor

B: INSTALLATION

CAUTION:
If lubricant is spilt over the exhaust pipe, wipe it off with cloth to avoid emission of smoke or causing a fire.
1) Before installing front oxygen (A/F) sensor, apply anti-seize compound only to the threaded portion of front oxygen (A/F) sensor to make the next removal easier.

CAUTION:
Never apply anti-seize compound to the protector of front oxygen (A/F) sensor.

Anti-seize compound:
NEVER-SEEZ NSN, JET LUBE SS-30 or equivalent
2) Install the front oxygen (A/F) sensor.

Tightening torque:
21 N·m (2.1 kgf-m, 15.5 ft-lb)

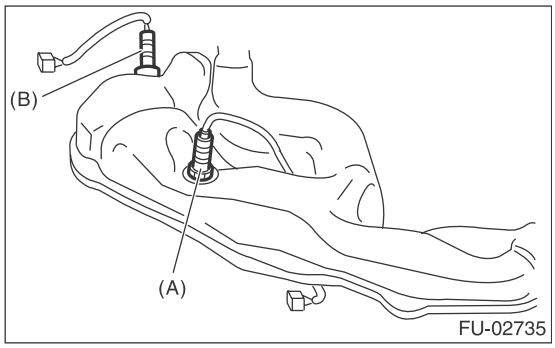

(A) Front oxygen (A/F) sensor
(B) Rear oxygen sensor

3) Install the under cover. <Ref. to EI-35, INSTALLATION, Front Under Cover.>
4) Lower the vehicle.
5) Connect the front oxygen (A/F) sensor connector (A) and fasten the harness with clips (C).

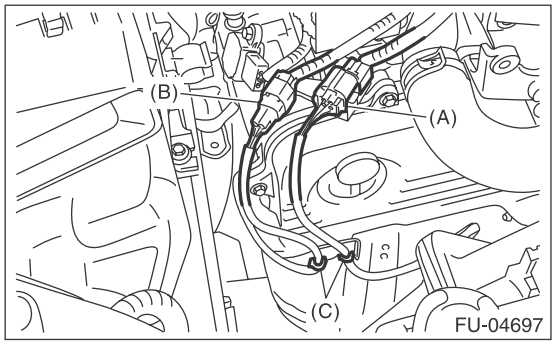

6) Install the air intake duct. <Ref. to IN(H4SO)-9, REMOVAL, Air Intake Duct.>

7) Connect the ground cable to battery.

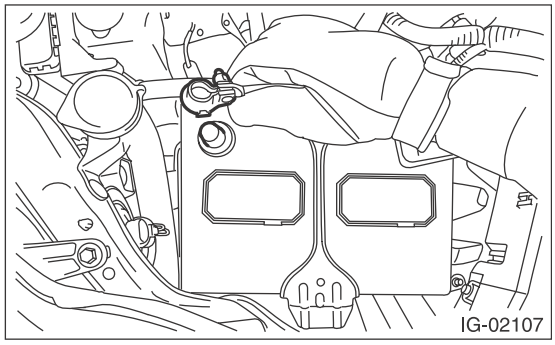

C: INSPECTION

1) Check that the front oxygen (A/F) sensor has no deformation, cracks or other damages.
2) Measure the resistance between front oxygen (A/F) sensor terminals.

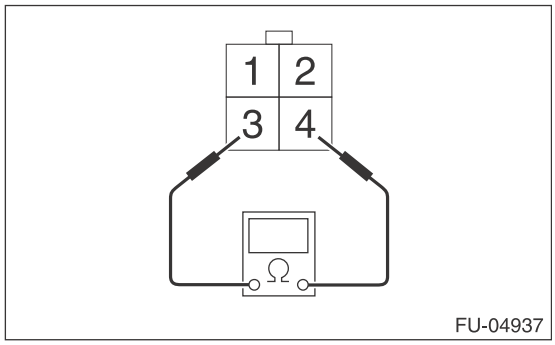

Terminal No.	Standard
3 and 4	$2.4^{+0.5}_{-0.24}$ Ω (when 20°C (68°F))

16.Rear Oxygen Sensor

A: REMOVAL

1) Disconnect the ground cable from battery.

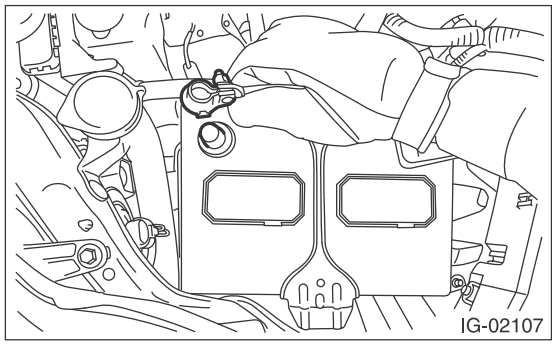

2) Remove the air intake duct. <Ref. to IN(H4SO)-9, REMOVAL, Air Intake Duct.>
3) Remove the clips (C) fastening the harness and disconnect the rear oxygen sensor connector (B).

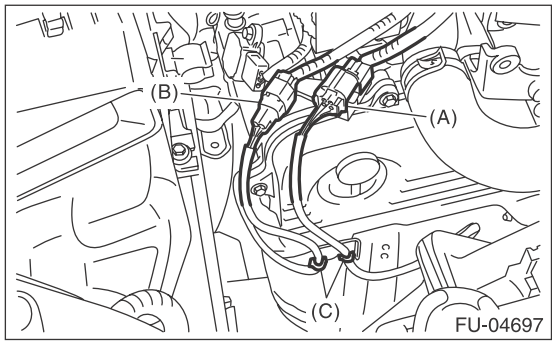

4) Lift up the vehicle.
5) Remove the under cover. <Ref. to EI-35, REMOVAL, Front Under Cover.>
6) Apply spray-type lubricant to the threaded portion of rear oxygen sensor, and leave it for one minute or more.
7) Remove the rear oxygen sensor.

CAUTION:
When removing the rear oxygen sensor, wait until exhaust pipe cools, otherwise it will damage the exhaust pipe.

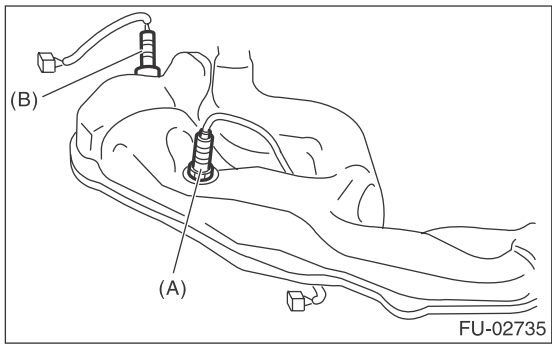

(A) Front oxygen (A/F) sensor
(B) Rear oxygen sensor

B: INSTALLATION

CAUTION:
If lubricant is spilt over the exhaust pipe, wipe it off with cloth to avoid emission of smoke or causing a fire.
1) Before installing rear oxygen sensor, apply the anti-seize compound only to the threaded portion of rear oxygen sensor to make the next removal easier.

CAUTION:
Never apply anti-seize compound to the protector of rear oxygen sensor.

Anti-seize compound:
NEVER-SEEZ NSN, JET LUBE SS-30 or equivalent
2) Install the rear oxygen sensor.

Tightening torque:
21 N·m (2.1 kgf-m, 15.5 ft-lb)

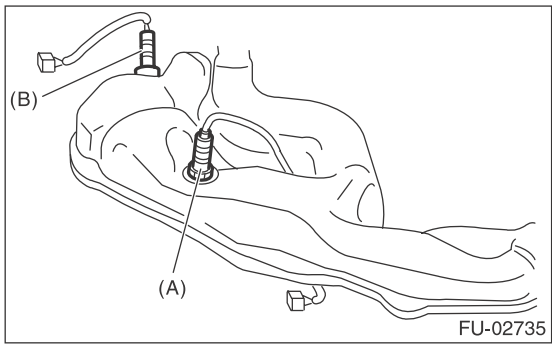

(A) Front oxygen (A/F) sensor
(B) Rear oxygen sensor

3) Install the under cover. <Ref. to EI-35, INSTALLATION, Front Under Cover.>
4) Lower the vehicle.
5) Connect the rear oxygen sensor connector (B) and fasten the harness with clips (C).

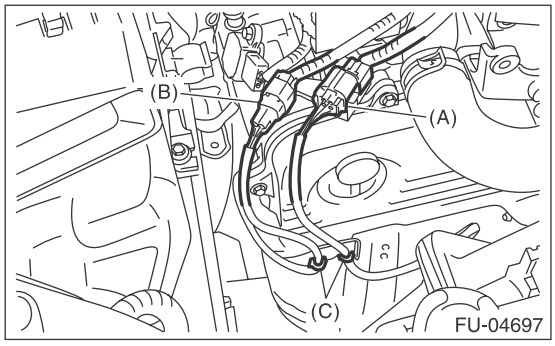

6) Install the air intake duct. <Ref. to IN(H4SO)-9, REMOVAL, Air Intake Duct.>

7) Connect the ground cable to battery.

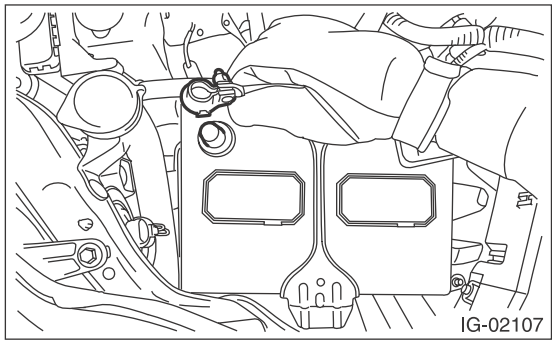

C: INSPECTION

1) Check that the rear oxygen sensor has no deformation, cracks or other damages.
2) Measure the resistance between rear oxygen sensor terminals.

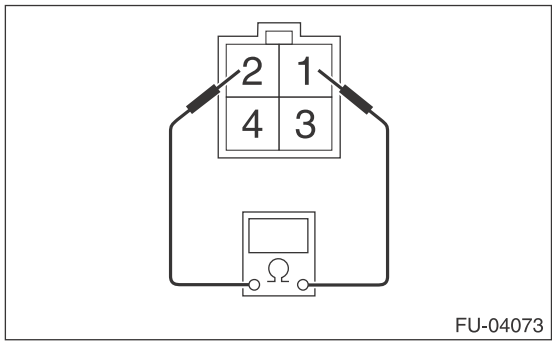

Terminal No.	Standard
1 and 2	$5.6^{+0.8}_{-0.6}$ Ω (when 20°C (68°F))

17.Engine Control Module (ECM)

A: REMOVAL

1) Disconnect the ground cable from battery.

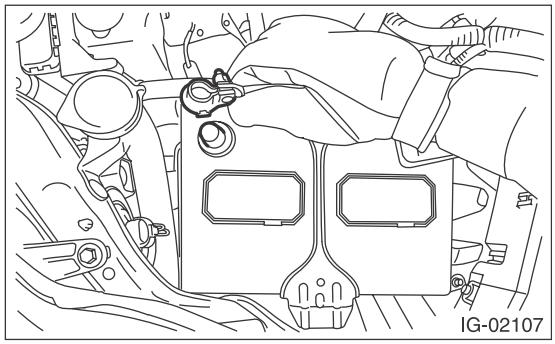

2) Remove the glove box lid assembly, glove box lower cover, instrument panel side cover LH and glove box back panel. <Ref. to EI-65, REMOVAL, Glove Box.>

3) Remove the connectors from ECM.

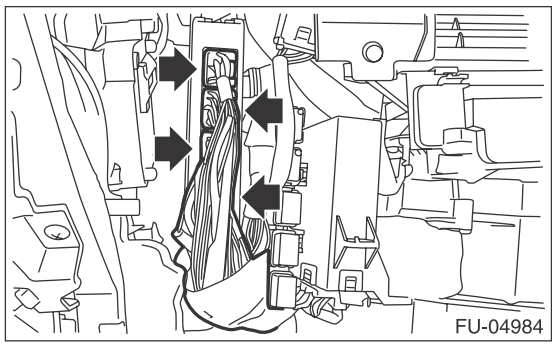

4) Remove the ECM from vehicle.

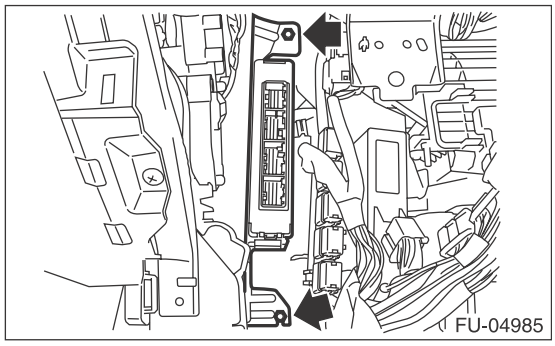

B: INSTALLATION

Install in the reverse order of removal.

CAUTION:

- **When the ECM of model with immobilizer has been replaced, be sure to perform the registration of immobilizer system. (Refer to "PC application help for Subaru Select Monitor".)**
- **If replacing ECM or the bracket, replace both parts with new parts at a time.**
- **After installing the bracket to ECM, do not separate the bracket.**
- **If the bracket has been installed to ECM in the wrong direction, replace both parts to new parts.**

NOTE:
When replacing the ECM, be careful not to use the wrong spec. ECM to avoid any damage on the fuel injection system.

C: INSPECTION

Check that the ECM has no deformation, cracks or other damages.

18.Main Relay

A: REMOVAL

1) Disconnect the ground cable from battery.

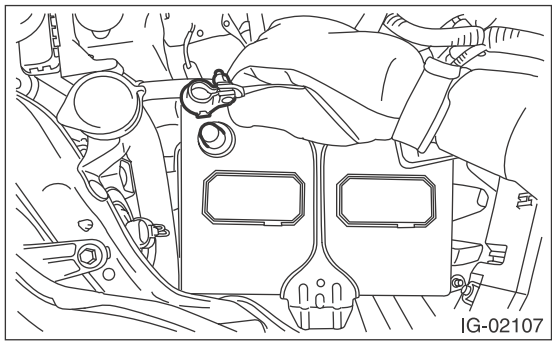

2) Remove the glove box lid assembly, glove box lower cover, instrument panel side cover LH and glove box back panel. <Ref. to EI-65, REMOVAL, Glove Box.>

3) Remove the main relay from the relay holder.

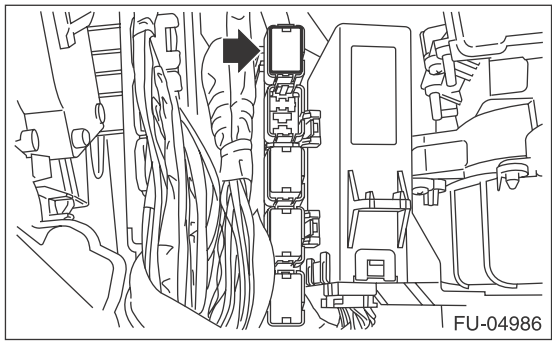

B: INSTALLATION

Install in the reverse order of removal.

C: INSPECTION

1) Check that the main relay has no deformation, cracks or other damages.

2) Measure the resistance between main relay terminals.

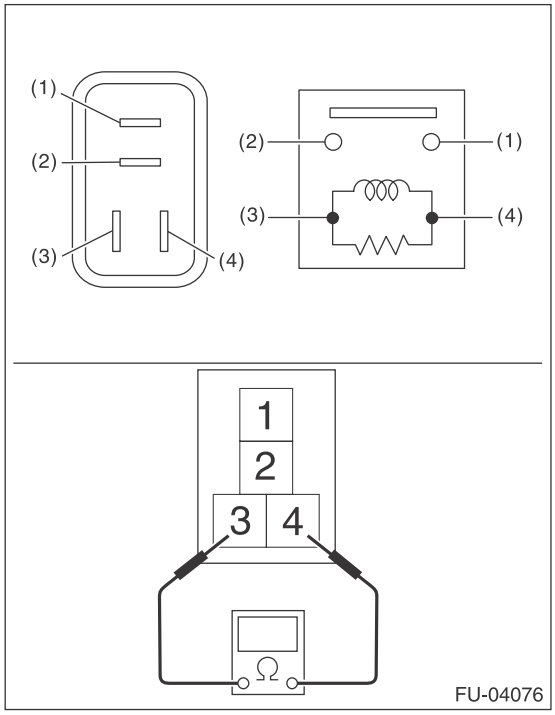

Terminal No.	Standard
1 and 2	1 MΩ or more
3 and 4	130.4 — 230.8 Ω (When 20°C (68°F))

3) Connect battery positive terminal to terminal No. 3 and battery ground terminal to terminal No. 4, and measure the resistance between the main relay terminals.

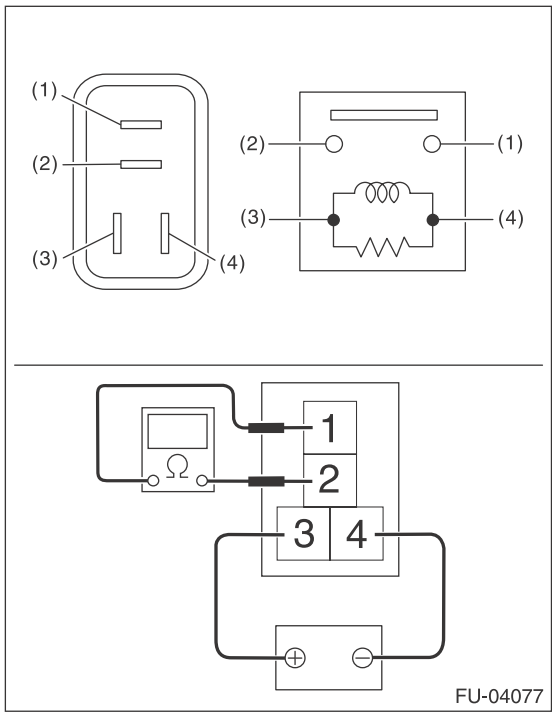

Terminal No.	Standard
1 and 2	Less than 1 Ω

19.Fuel Pump Relay

A: REMOVAL

1) Disconnect the ground cable from battery.

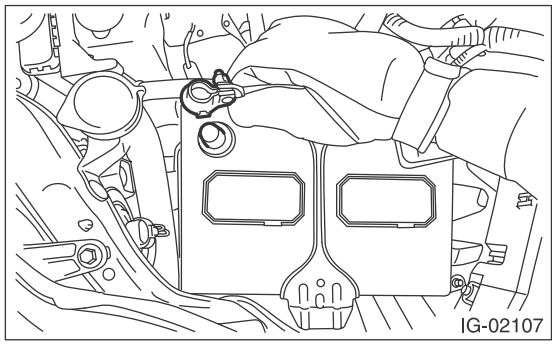

2) Remove the glove box lid assembly, glove box lower cover, instrument panel side cover LH and glove box back panel. <Ref. to EI-65, REMOVAL, Glove Box.>
3) Remove the fuel pump relay from the relay holder.

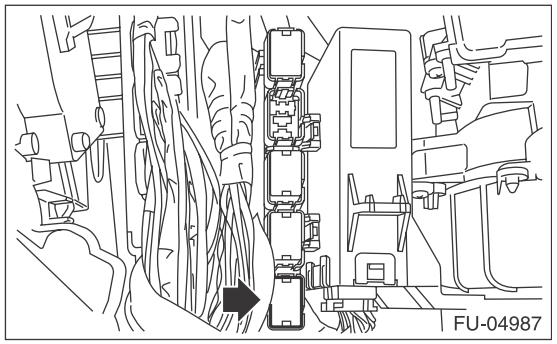

B: INSTALLATION

Install in the reverse order of removal.

C: INSPECTION

1) Check that the fuel pump relay has no deformation, cracks or other damages.
2) Measure the resistance between fuel pump relay terminals.

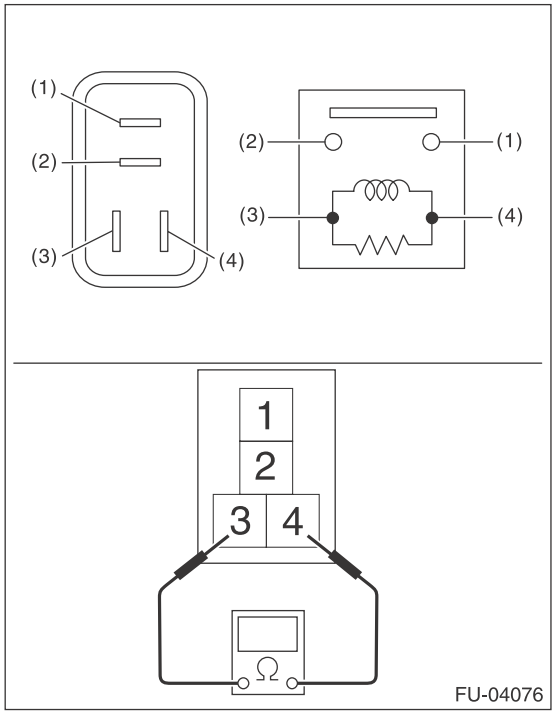

Terminal No.	Standard
1 and 2	1 MΩ or more
3 and 4	93.8 — 136.4 Ω (When 20°C (68°F))

3) Connect battery positive terminal to terminal No. 3 and battery ground terminal to terminal No. 4, and measure the resistance between the fuel pump relay terminals.

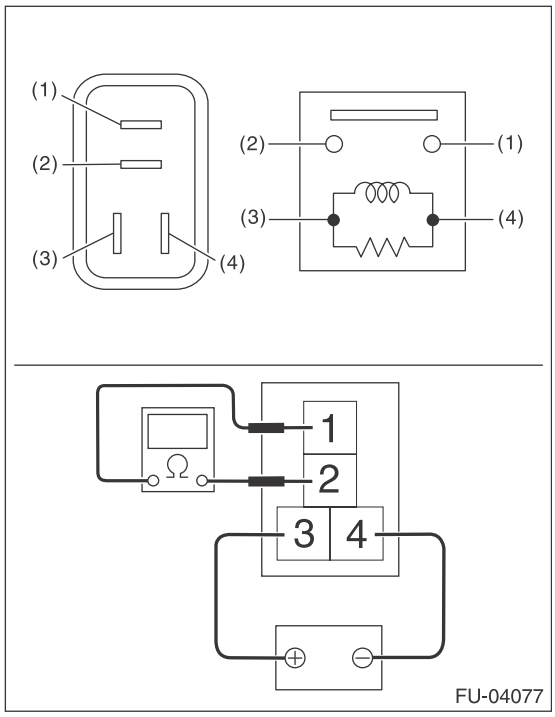

Terminal No.	Standard
1 and 2	Less than 1 Ω

20. Electronic Throttle Control Relay

A: REMOVAL

1) Disconnect the ground cable from battery.

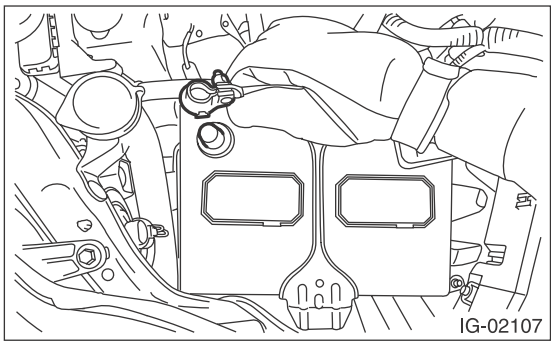

2) Remove the glove box lid assembly, glove box lower cover, instrument panel side cover LH and glove box back panel. <Ref. to EI-65, REMOVAL, Glove Box.>
3) Remove the electronic throttle control relay from the relay holder.

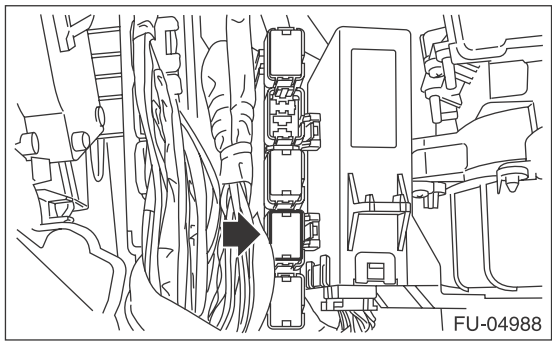

B: INSTALLATION

Install in the reverse order of removal.

C: INSPECTION

1) Check that the electronic throttle control relay has no deformation, cracks or other damages.
2) Measure the resistance between electronic throttle control relay terminals.

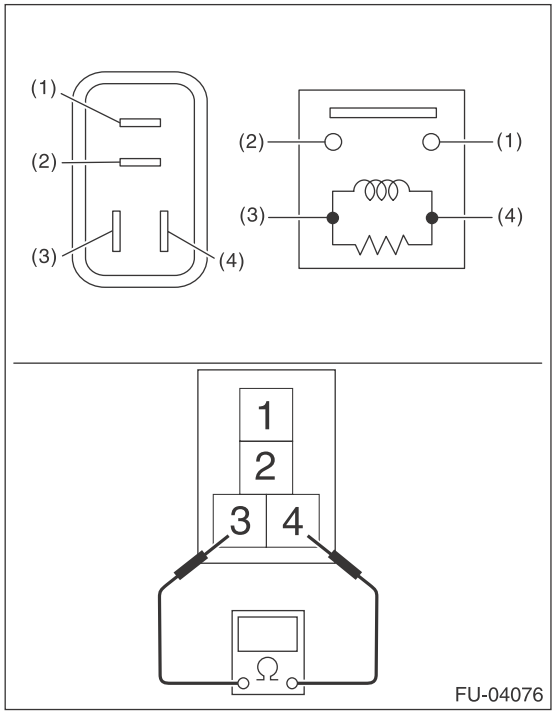

Terminal No.	Standard
1 and 2	1 MΩ or more
3 and 4	93.8 — 136.4 Ω (When 20°C (68°F))

3) Connect battery positive terminal to terminal No. 3 and battery ground terminal to terminal No. 4, and measure the resistance between the electronic throttle control relay terminals.

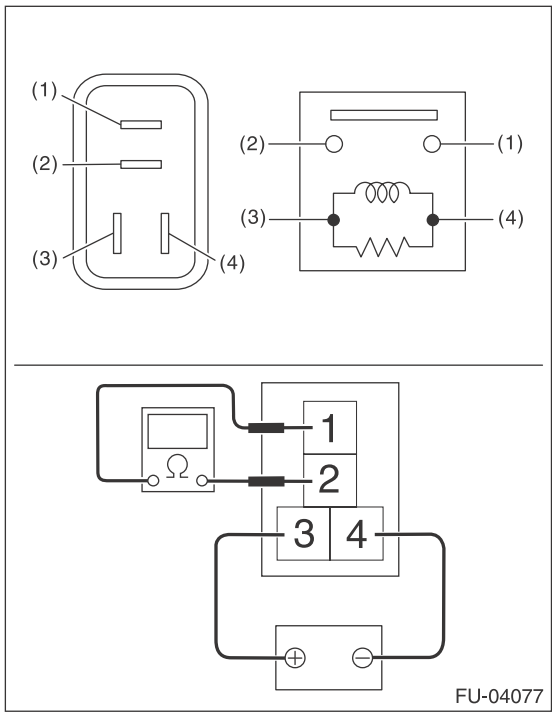

Terminal No.	Standard
1 and 2	Less than 1 Ω

21.Fuel

A: PROCEDURE

1. RELEASING OF FUEL PRESSURE

WARNING:
Place “NO OPEN FLAMES” signs near the working area.

CAUTION:
Be careful not to spill fuel.

1) Remove the fuse of fuel pump from main fuse box.

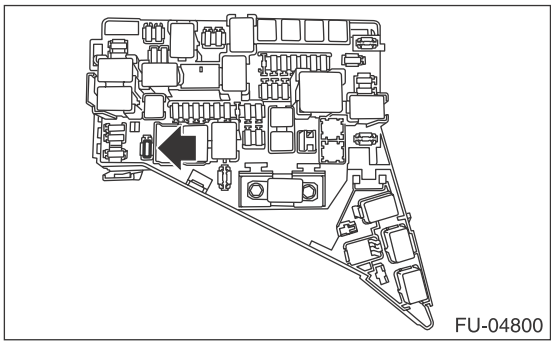

2) Start the engine and run it until it stalls.
3) After the engine stalls, crank it for five more seconds.
4) Turn the ignition switch to OFF.
5) Install the fuse of fuel pump to the main fuse box.

2. DRAINING FUEL (WITH SUBARU SELECT MONITOR)

WARNING:
Place “NO OPEN FLAMES” signs near the working area.

CAUTION:
Be careful not to spill fuel.

NOTE:
• If the fuel pump cannot be driven, refer to the procedures for draining from the fuel filler hose. <Ref. to FU(H4SO)-46, DRAINING FUEL (THROUGH THE FUEL FILLER HOSE), PROCEDURE, Fuel.>
• Be careful not to let the battery run-out.

1) Release the fuel pressure. <Ref. to FU(H4SO)-46, RELEASING OF FUEL PRESSURE, PROCEDURE, Fuel.>
2) Attach ST to the fuel delivery pipe and push ST in the direction of arrow mark to disconnect the fuel delivery hose.
ST 42099AE000 QUICK CONNECTOR RELEASE

CAUTION:
• **Be careful not to spill fuel.**
• **Catch the fuel from hoses using a container or cloth.**

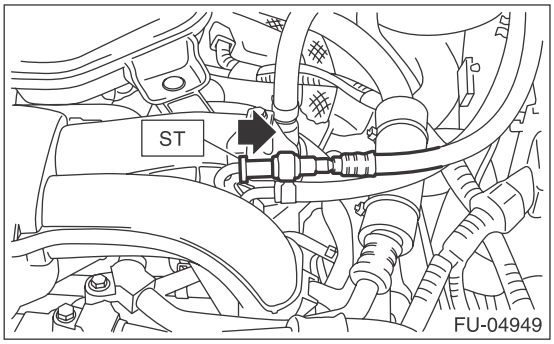

3) Connect ST to the fuel delivery hose.
ST 18471AA000 FUEL PIPE ADAPTER
4) Drive the fuel pump and drain the fuel using Subaru Select Monitor. (Refer to “PC application help for Subaru Select Monitor”.)

CAUTION:
Be careful not to spill fuel.

5) Install the related parts in the reverse order after draining the fuel.

3. DRAINING FUEL (THROUGH THE FUEL FILLER HOSE)

WARNING:
Place “NO OPEN FLAMES” signs near the working area.

CAUTION:
• **Be careful not to spill fuel.**
• **Fuel may remain in the fuel filler pipe. Draining the fuel from the fuel filler pipe through the fill opening using the gasoline proof pump and the gasoline proof hose (ø10 or less) before the operation.**

1) Lift up the vehicle.
2) Remove the rear exhaust pipe and muffler. <Ref. to EX(H4SO)-8, REMOVAL, Rear Exhaust Pipe.> <Ref. to EX(H4SO)-9, REMOVAL, Muffler.>
3) Open the fuel filler lid and remove the fuel filler cap.
4) Drain the fuel from the fuel filler pipe through the filler opening using the gasoline proof pump and the gasoline proof hose (ø10 or less).
5) Disconnect the fuel filler hoses from the fuel filler pipe.

CAUTION:
• **Be careful not to spill fuel.**

• Catch the fuel from hoses using a container or cloth.

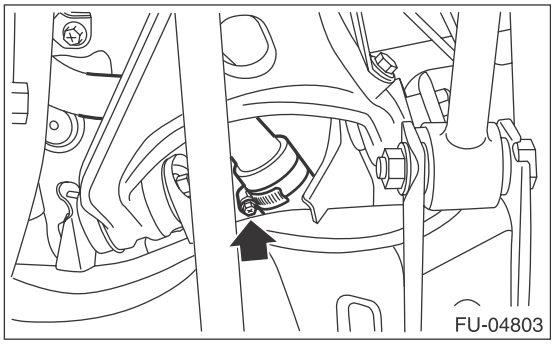

6) Set the container under the vehicle and insert the gasoline proof hose (ø10 or less) into the fuel filler hose to drain the fuel.

CAUTION:
Be careful not to spill fuel.

7) Install the related parts in the reverse order after draining the fuel.

Tightening torque:
2.5 N·m (0.3 kgf-m, 1.8 ft-lb)

22.Fuel Tank

A: REMOVAL

WARNING:
Place “NO OPEN FLAMES” signs near the working area.

CAUTION:
Be careful not to spill fuel.

1) Release the fuel pressure. <Ref. to FU(H4SO)-46, RELEASING OF FUEL PRESSURE, PROCEDURE, Fuel.>
2) Drain fuel. <Ref. to FU(H4SO)-46, DRAINING FUEL (WITH SUBARU SELECT MONITOR), PROCEDURE, Fuel.>
3) Disconnect the ground cable from battery.

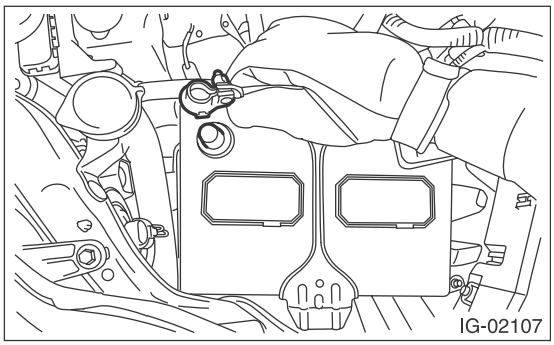

4) Remove the rear seat cushion. <Ref. to SE-32, REMOVAL, Rear Seat.>
5) Remove the clips (A) and seat cushion hooks (B), and turn over the floor mat (C).

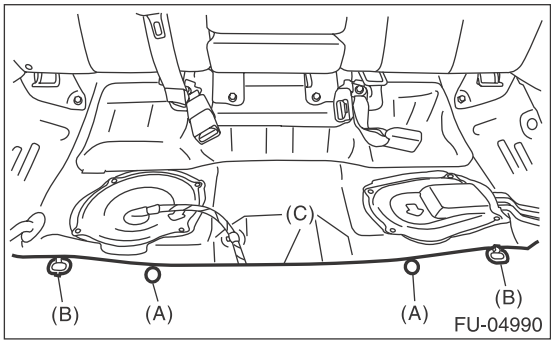

6) Remove the service hole cover of fuel pump.
   (1) Disconnect the fuel cord connector (A), and remove the clip (B).
   (2) Remove the screw (C).
   (3) Push the grommet (D) down and remove the service hole cover.

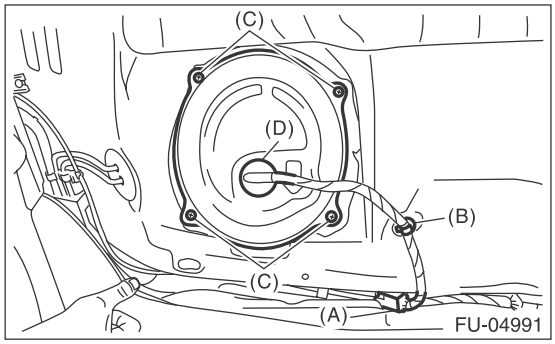

7) Remove the service hole cover of fuel sub level sensor.

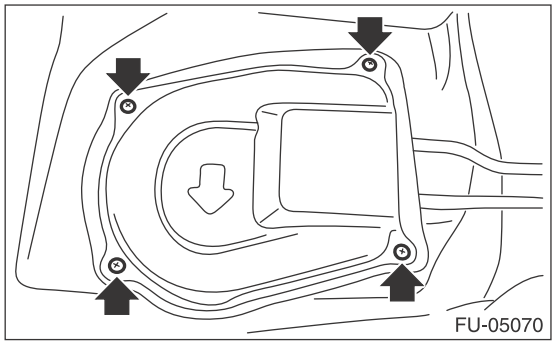

8) Disconnect the quick connector on the fuel delivery tube (A). <Ref. to FU(H4SO)-66, Fuel Delivery and Evaporation Lines.>

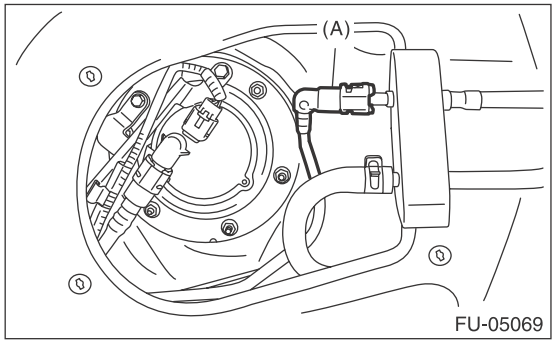

9) Remove the rear wheels.
10) Lift up the vehicle.
11) Remove the rear ABS wheel speed sensor from the rear housing.

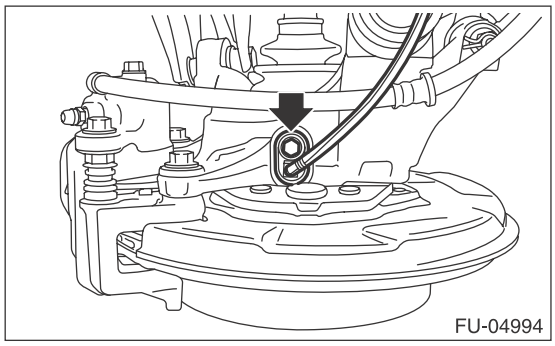

12) Remove the rear ABS wheel speed sensor harness bracket from the upper arm.

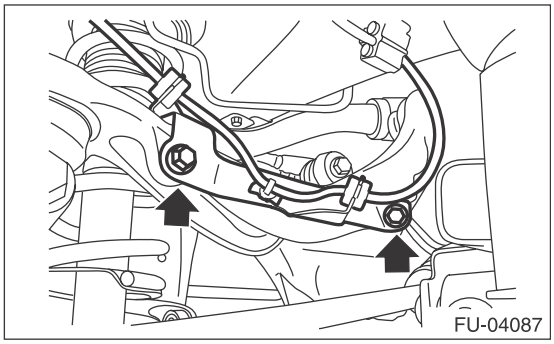

13) Remove the rear brake hose bracket from rear housing.

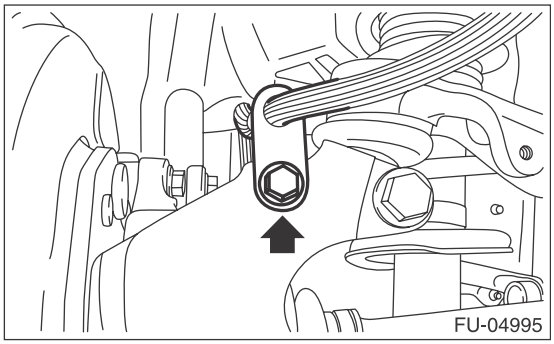

14) Remove the rear disc brake assembly and tie it to the body side of the vehicle.

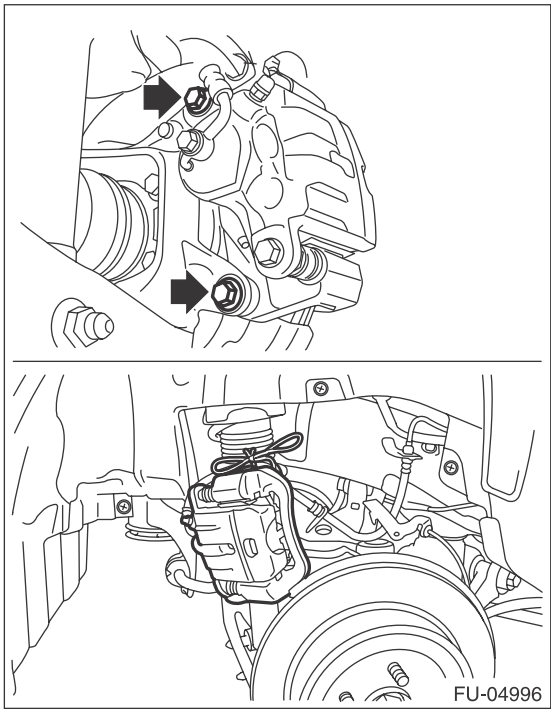

15) Remove the parking brake cable from parking brake assembly. <Ref. to PB-6, REMOVAL, Parking Brake Assembly (Rear Disc Brake).>
16) Remove the rear exhaust pipe and muffler. <Ref. to EX(H4SO)-8, REMOVAL, Rear Exhaust Pipe.> <Ref. to EX(H4SO)-9, REMOVAL, Muffler.>

17) Remove the heat shield cover.

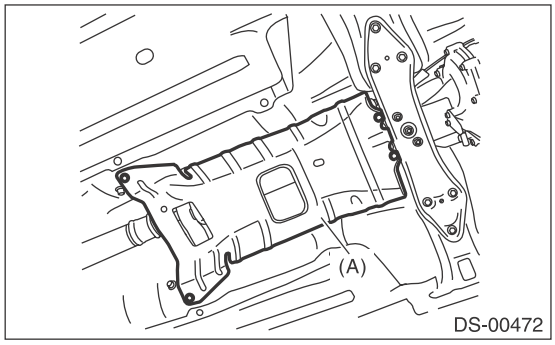

(A) Heat shield cover

18) Remove the propeller shaft. <Ref. to DS-10, REMOVAL, Propeller Shaft.>
19) Remove the clip (A) securing the fuel tank protector and heat shield cover.
20) Remove the bolts (B) and nuts (C) securing the fuel tank protector, and remove the fuel tank protector.

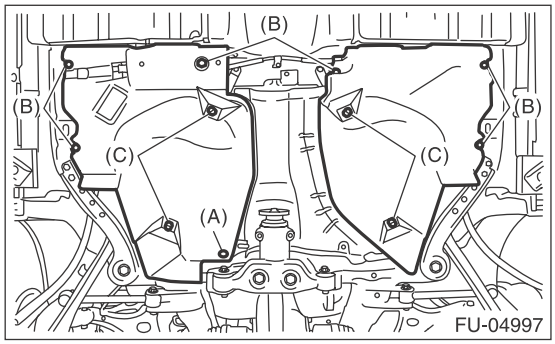

21) Remove the bolts and nuts securing the heat shield cover and remove the heat shield cover.

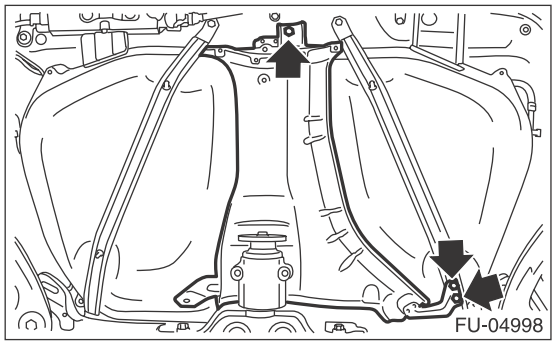

22) Remove the rear suspension assembly.

WARNING:
A helper is required to perform this work.
(1) Support the rear differential with the transmission jack.

(2) Remove the bolt and nut which secure rear shock absorber to rear suspension arm.

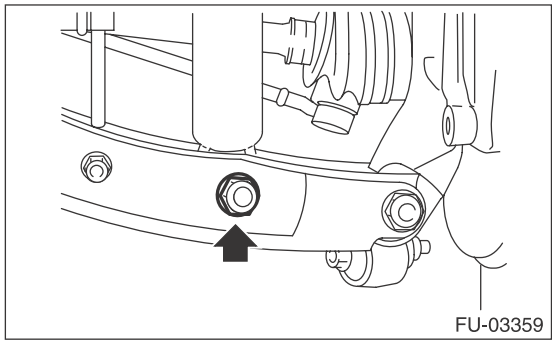

(3) Remove the bolts which secure the rear suspension assembly to the body.

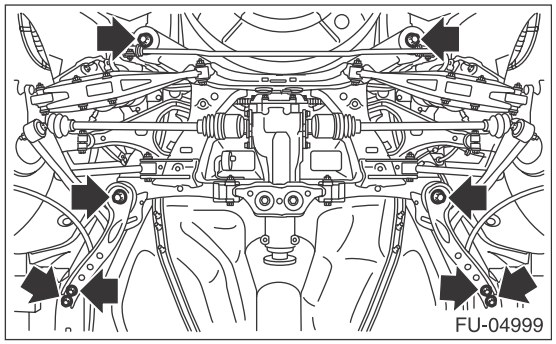

(4) Remove the rear suspension assembly.

23) Disconnect the air vent hose from the fuel tank.

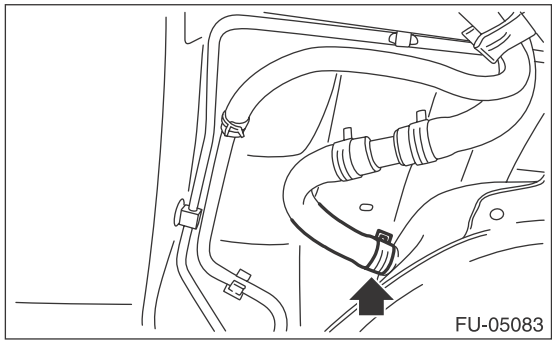

24) Disconnect the quick connector of the circulate tube from evaporation pipe.

NOTE:
Disconnect the quick connector as shown in the figure.

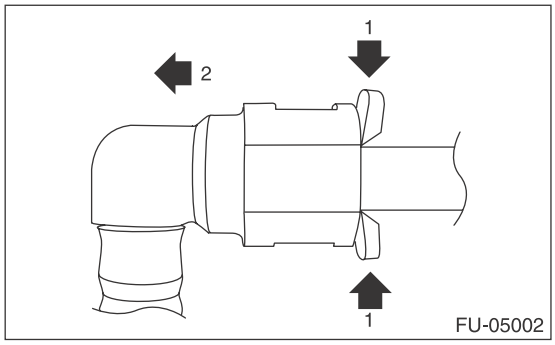

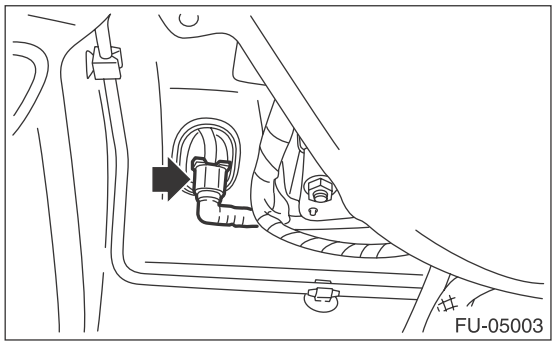

25) Disconnect the fuel filler hose (A) and circulate hose (B) from the fuel filler pipe assembly.

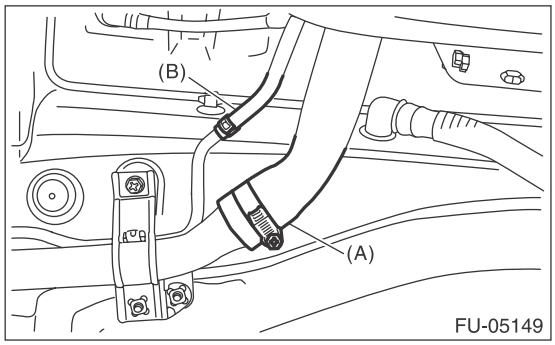

26) Support the fuel tank with a transmission jack, remove the bolts from the fuel tank band, and remove the fuel tank from the vehicle.

WARNING:
- **A helper is required to perform this work.**

• Fuel may remain in the fuel tank. This will cause the left and right sides to be unbalanced. Be careful not to drop the fuel tank when removing.

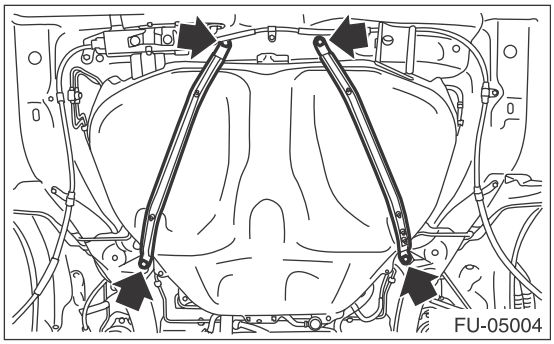
FU-05004

B: INSTALLATION

1) Support the fuel tank with a transmission jack, set the fuel tank in place, and temporarily tighten the bolts of the fuel tank band.

WARNING:
A helper is required to perform this work.

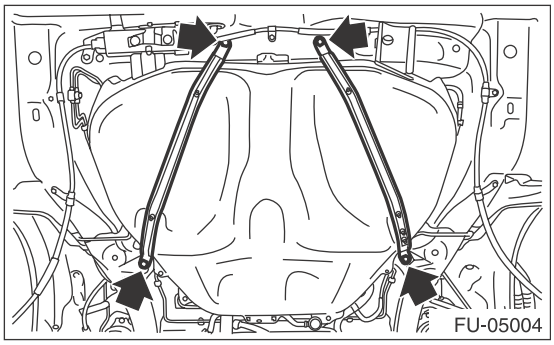
FU-05004

2) Securely insert the fuel filler hose (A) and circulate hose (B) to the spool, then attach the clamp or clip as shown in the figure.

Tightening torque:
2.5 N·m (0.3 kgf-m, 1.8 ft-lb)

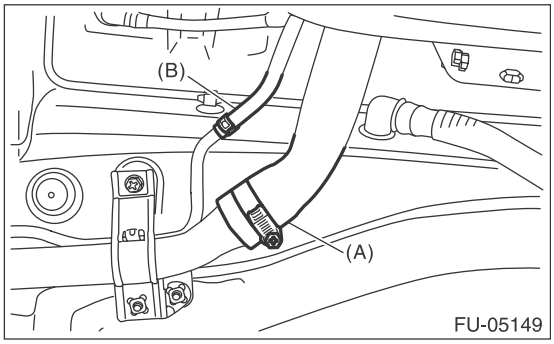

FU-05149

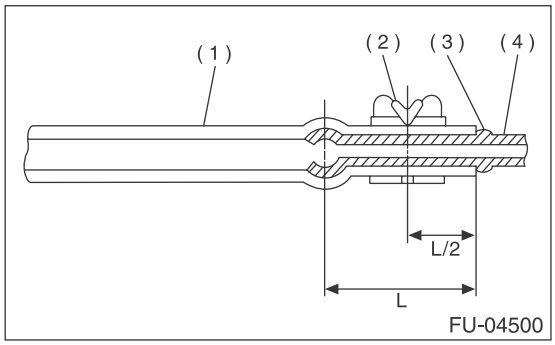

FU-04500

(1) Hose
(2) Clamp or clip
(3) Spool
(4) Pipe

3) Connect the quick connector of the circulate tube to the evaporation pipe as shown in the figure.

CAUTION:
• Check that there is no damage or dust on the quick connector. If necessary, clean the seal surface of the pipe.
• Make sure that the quick connector is securely connected.

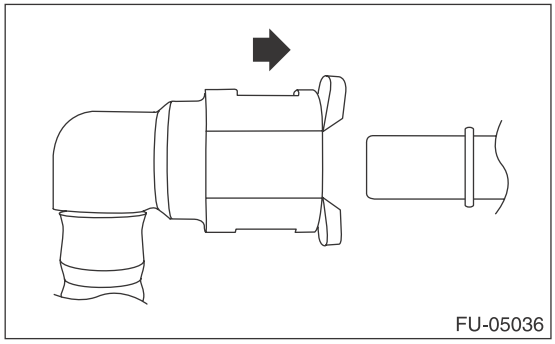
FU-05036

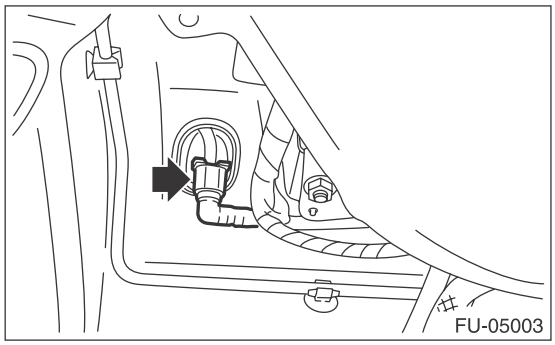
FU-05003

4) Connect the air vent hose to fuel tank.

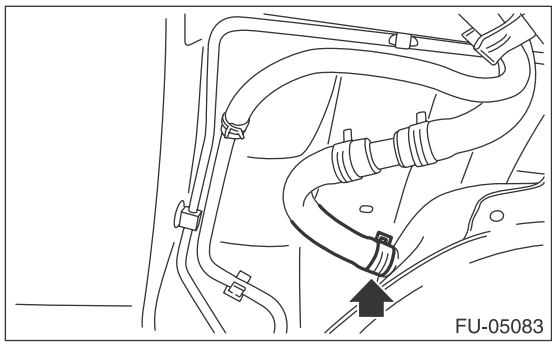

5) Tighten the bolts of the fuel tank band in the order shown in the figure.

Tightening torque:
33 N·m (3.4 kgf-m, 24.3 ft-lb)

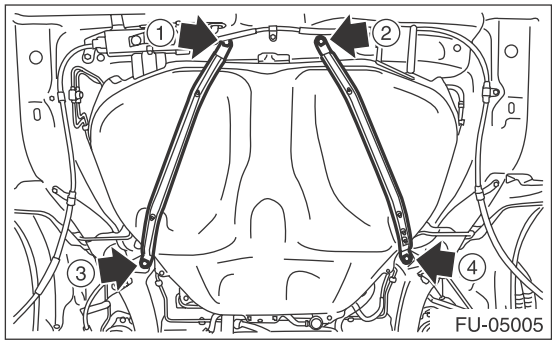

6) Install the rear suspension assembly.

WARNING:
A helper is required to perform this work.

(1) Support the rear differential with the transmission jack.

(2) While supporting the rear suspension assembly, install the rear suspension assembly to the body.

Tightening torque:
T1: 70 N·m (7.1 kgf-m, 51.6 ft-lb)
T2: 200 N·m (20.4 kgf-m, 147.5 ft-lb)

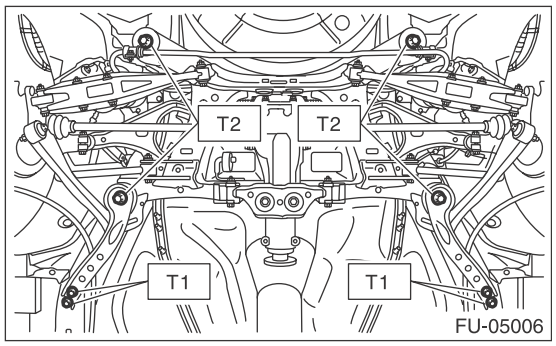

(3) Install the rear shock absorber to the rear suspension arm.

NOTE:
Use a new self-locking nut.

Tightening torque:
120 N·m (12.2 kgf-m, 88.5 ft-lb)

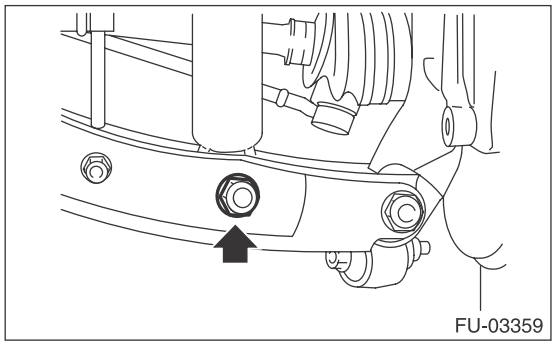

7) Install the heat shield cover.

Tightening torque:
18 N·m (1.8 kgf-m, 13.3 ft-lb)

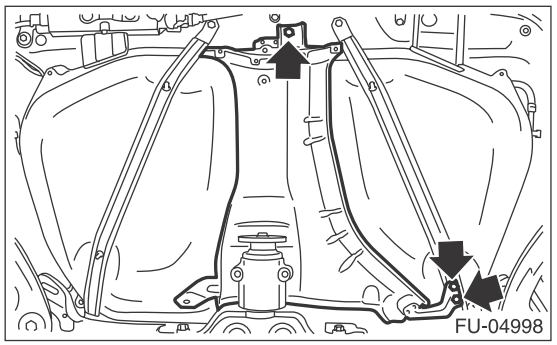

8) Install the bolts (B) and nuts (C) securing the fuel tank protector and install the clip (A) securing the fuel tank protector and heat shield cover.

Tightening torque:
Nut (C): 9 N·m (0.9 kgf-m, 6.6 ft-lb)
Bolt (B): 18 N·m (1.8 kgf-m, 13.3 ft-lb)

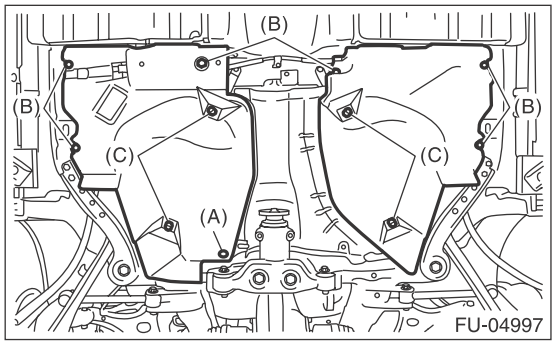

9) Install the propeller shaft. <Ref. to DS-10, INSTALLATION, Propeller Shaft.>

10) Install the rear exhaust pipe and muffler. <Ref. to EX(H4SO)-8, INSTALLATION, Rear Exhaust Pipe.> <Ref. to EX(H4SO)-9, INSTALLATION, Muffler.>

11) Lower the vehicle.

12) Connect the parking brake cable to the parking brake assembly. <Ref. to PB-7, INSTALLATION, Parking Brake Assembly (Rear Disc Brake).>

13) Install the rear disc brake assembly.

Tightening torque:
66 N·m (6.7 kgf-m, 48.7 ft-lb)

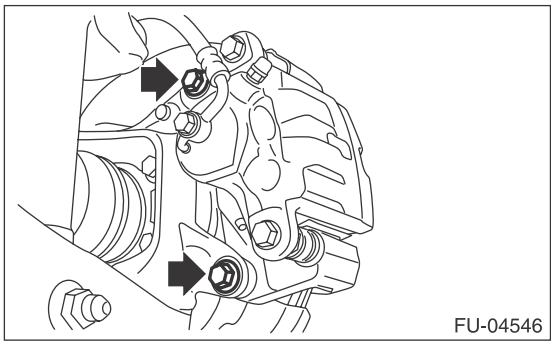

14) Install the rear brake hose bracket to the rear housing.

Tightening torque:
33 N·m (3.4 kgf-m, 24.3 ft-lb)

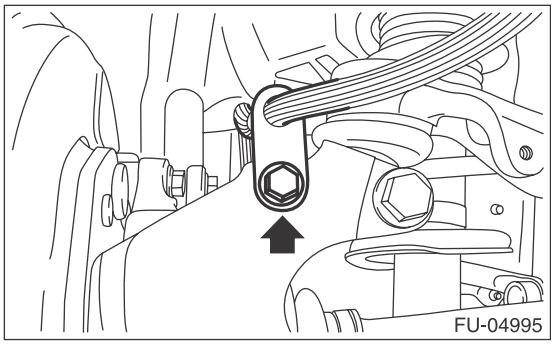

15) Install the rear ABS wheel speed sensor harness bracket to the upper arm.

Tightening torque:
7.5 N·m (0.8 kgf-m, 5.5 ft-lb)

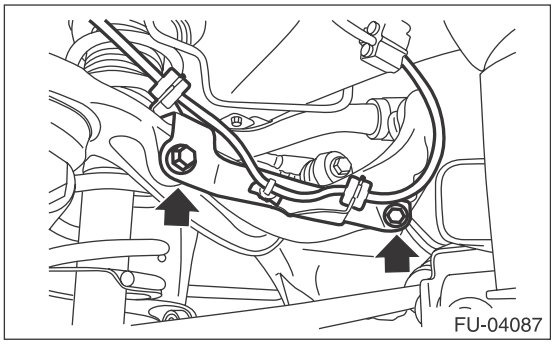

16) Install the rear ABS wheel speed sensor to the rear housing.

Tightening torque:
7.5 N·m (0.8 kgf-m, 5.5 ft-lb)

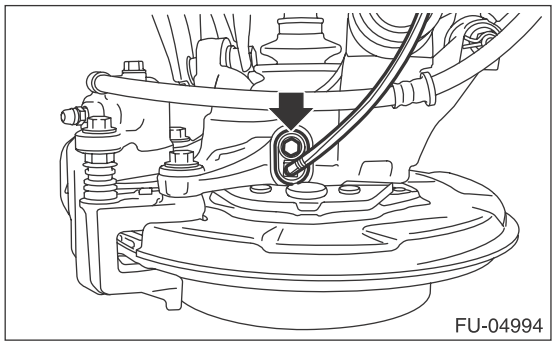

17) Install the rear wheels.

Tightening torque:
120 N·m (12.2 kgf-m, 88.5 ft-lb)

18) Connect the quick connector of the fuel delivery tube (A). <Ref. to FU(H4SO)-68, INSTALLATION, Fuel Delivery and Evaporation Lines.>

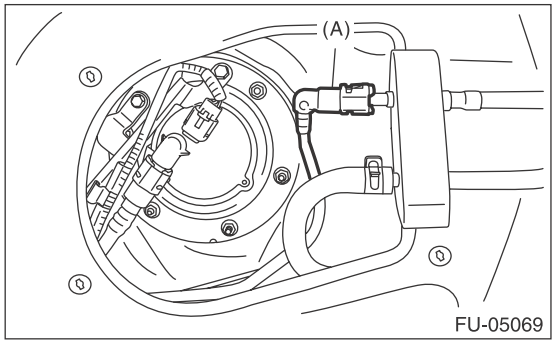

19) Install the service hole cover of fuel sub level sensor.

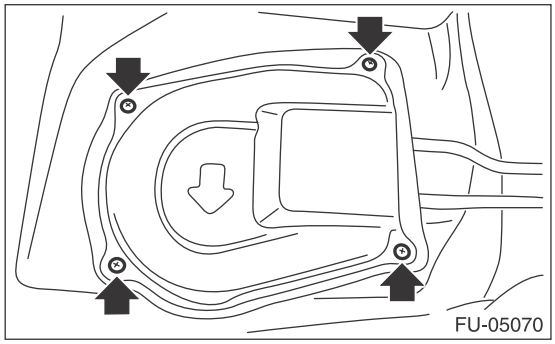

20) Install the service hole cover of the fuel pump, and install the connector and clip.

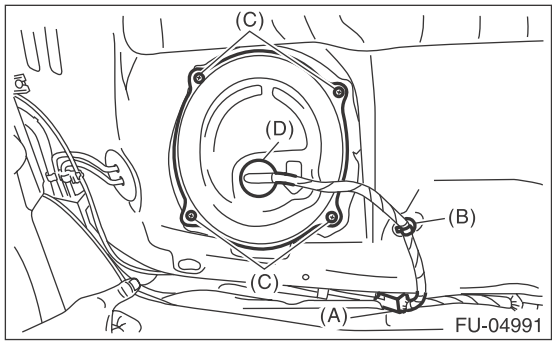

(A) Connector
(B) Clip
(C) Screw
(D) Grommet

21) Set the floor mat (C), and install clips (A) and seat cushion hooks (B).

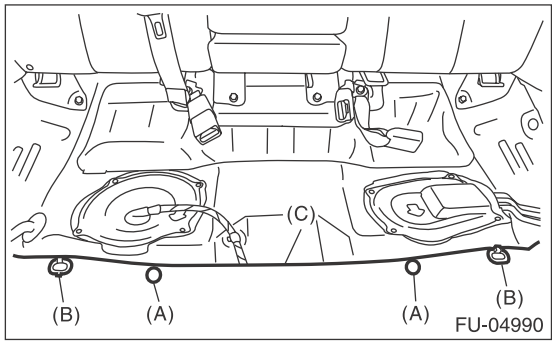

22) Install the rear seat cushion. <Ref. to SE-47, INSTALLATION, Rear Seat.>
23) Connect the ground cable to battery.

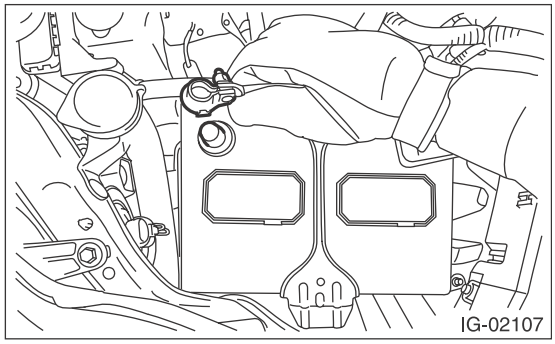

24) Inspect the wheel alignment and adjust if necessary.

C: INSPECTION

1) Check that the fuel tank and fuel pipe have no deformation, cracks and other damages.
2) Check that the fuel hose has no cracks, damage or loose part.

23.Fuel Filler Pipe

A: REMOVAL

WARNING:
Place “NO OPEN FLAMES” signs near the working area.

CAUTION:
Be careful not to spill fuel.

1) Release the fuel pressure. <Ref. to FU(H4SO)-46, RELEASING OF FUEL PRESSURE, PROCEDURE, Fuel.>
2) Drain fuel. <Ref. to FU(H4SO)-46, DRAINING FUEL (WITH SUBARU SELECT MONITOR), PROCEDURE, Fuel.>
3) Disconnect the ground cable from battery.

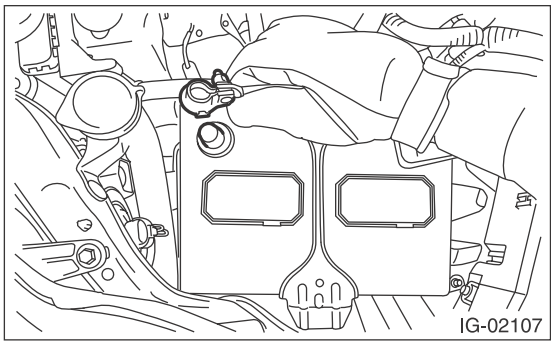
IG-02107

4) Open the fuel filler lid, and remove the filler cap.
5) Turn the fuel filler pipe protector in the direction of the arrow to unlock and remove it.

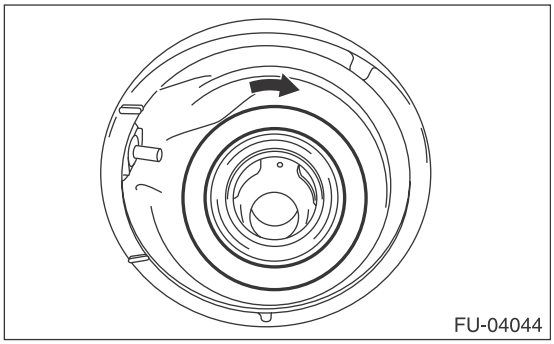
FU-04044

6) Remove the rear wheel RH.
7) Lift up the vehicle.
8) Remove the rear mud guard RH. <Ref. to EI-38, REMOVAL, Mud Guard.>
9) Remove the rear sub frame. <Ref. to RS-17, REMOVAL, Rear Sub Frame.>
10) Disconnect the fuel filler hose (A) and circulate hose (B) from the fuel filler pipe assembly.

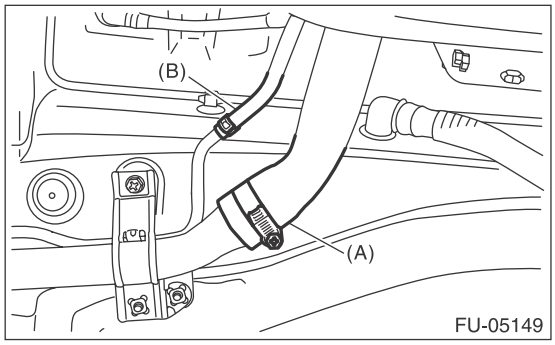

FU-05149

11) Disconnect the evaporation hose (A) from fuel filler pipe assembly and remove the bolts and nuts securing the fuel filler pipe assembly to the vehicle body.

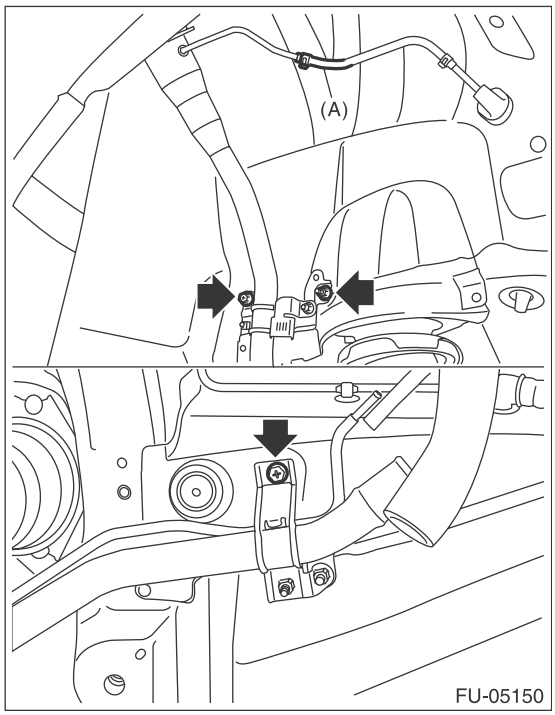

FU-05150

12) Remove the fuel filler pipe assembly from the underside of the vehicle.

B: INSTALLATION

1) Open the fuel filler lid.
2) Insert the fuel filler pipe assembly into the rubber saucer from inside of the rear fender.
3) Install the fuel filler pipe assembly to the vehicle body and connect the evaporation hose (A) and circulate hose (B) to the fuel filler pipe assembly.

Tightening torque:
7.5 N·m (0.8 kgf-m, 5.5 ft-lb)

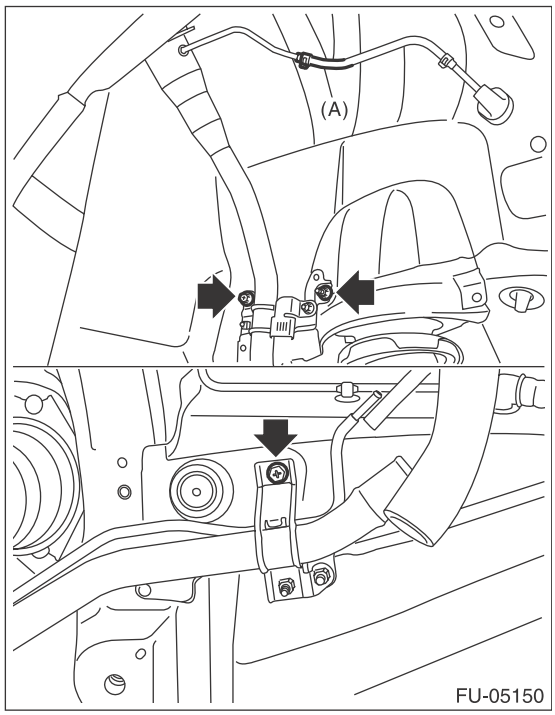

4) Align the cutout on the fuel filler pipe protector and the protrusion of the neck holder and insert them all the way, and then turn the fuel filler pipe protector in the direction of the arrow until it is locked.

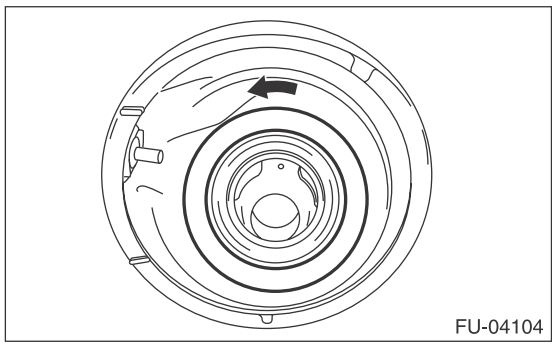

5) Securely insert the fuel filler hose (A) and circulate hose (B) to the spool, then attach the clamp or clip as shown in the figure.

Tightening torque:
2.5 N·m (0.3 kgf-m, 1.8 ft-lb)

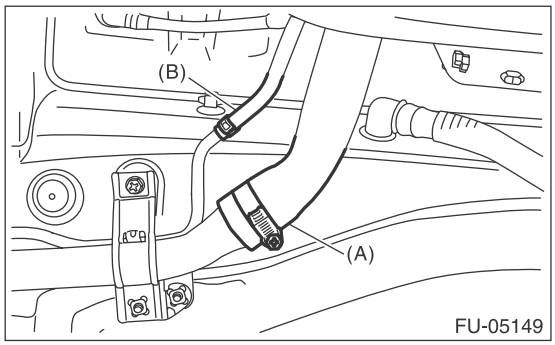

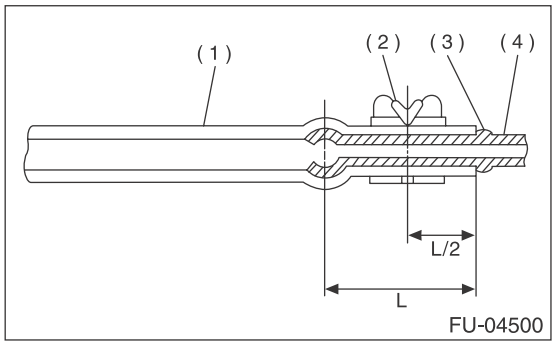

(1) Hose
(2) Clamp or clip
(3) Spool
(4) Pipe

6) Install the rear sub frame. <Ref. to RS-18, INSTALLATION, Rear Sub Frame.>
7) Install the rear mud guard RH. <Ref. to EI-38, INSTALLATION, Mud Guard.>
8) Lower the vehicle.
9) Install the rear wheel RH.

Tightening torque:
120 N·m (12.2 kgf-m, 88.5 ft-lb)

10) Connect the ground cable to battery.

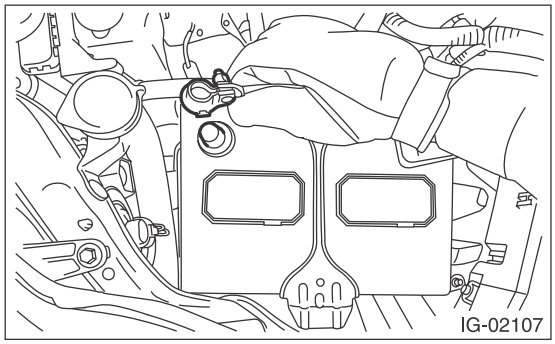

11) Inspect the wheel alignment and adjust if necessary.

C: DISASSEMBLY

Remove the fuel filler pipe bracket from the fuel filler pipe.

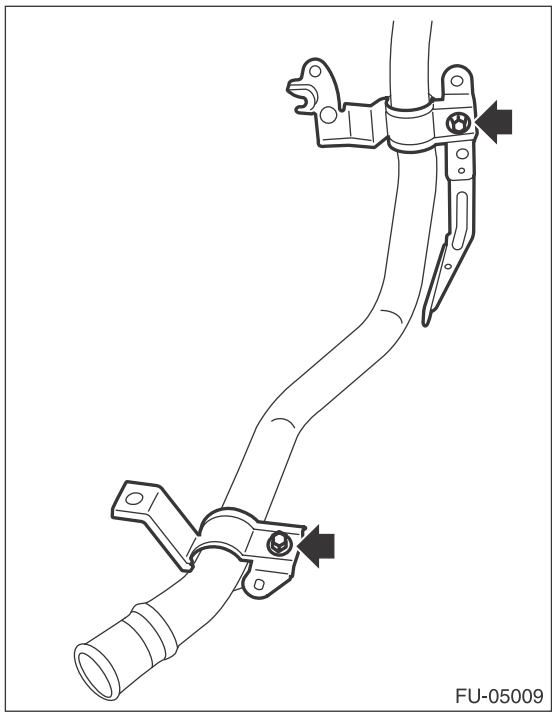

D: ASSEMBLY

Install the fuel filler pipe bracket to the fuel filler pipe.

Tightening torque:
7.35 N·m (0.7 kgf-m, 5.4 ft-lb)

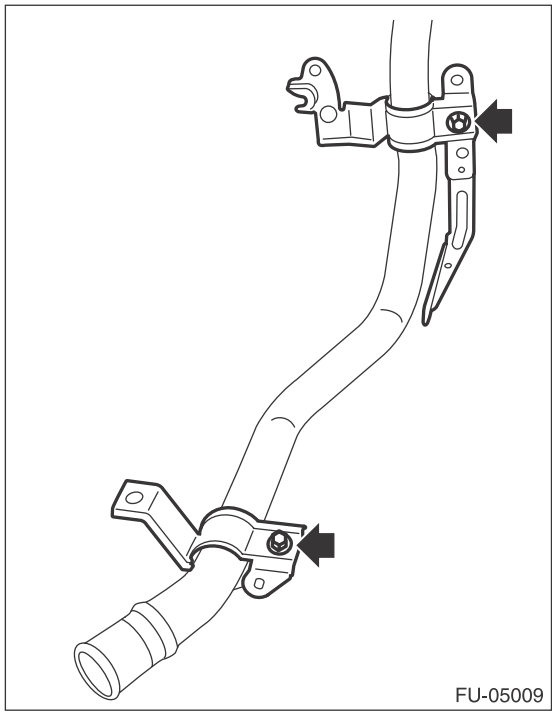

E: INSPECTION

Check that the fuel filler pipe does not have deformation, cracks or other damages.

24.Fuel Pump

A: REMOVAL

WARNING:
Place “NO OPEN FLAMES” signs near the working area.

CAUTION:
- **Be careful not to spill fuel.**
- **If the fuel gauge indicates that two thirds or more of the fuel is remaining, be sure to drain fuel before starting work to avoid the fuel to spill.**

NOTE:
Fuel pump assembly consists of fuel pump, fuel filter, fuel chamber and fuel level sensor.

1) Release the fuel pressure. <Ref. to FU(H4SO)-46, RELEASING OF FUEL PRESSURE, PROCEDURE, Fuel.>
2) Drain fuel. <Ref. to FU(H4SO)-46, DRAINING FUEL (WITH SUBARU SELECT MONITOR), PROCEDURE, Fuel.>
3) Disconnect the ground cable from battery.

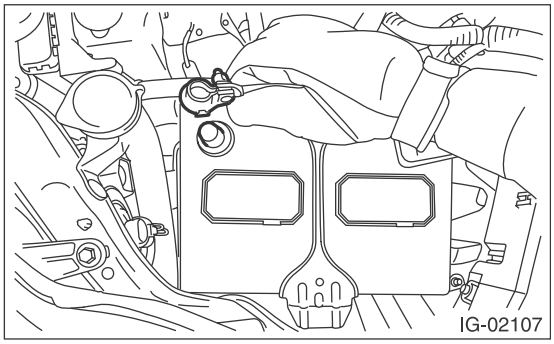
IG-02107

4) Remove the rear seat cushion. <Ref. to SE-32, REMOVAL, Rear Seat.>
5) Remove the clips (A) and seat cushion hooks (B), and turn over the floor mat (C).

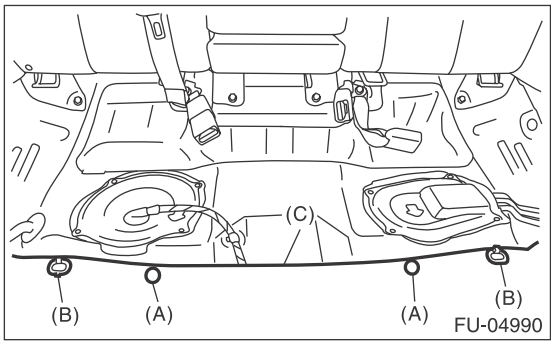

FU-04990

6) Remove the service hole cover.
(1) Disconnect the fuel cord connector (A), and remove the clip (B).
(2) Remove the screw (C).
(3) Push the grommet (D) down and remove the service hole cover.

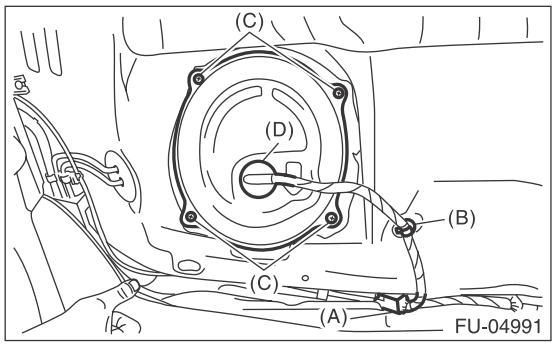

FU-04991

7) Disconnect the connector (A) from fuel pump, and remove the clip (B) securing the harness.
8) Disconnect the quick connector of fuel delivery tube (C) and fuel sub delivery tube (D). <Ref. to FU(H4SO)-66, REMOVAL, Fuel Delivery and Evaporation Lines.>

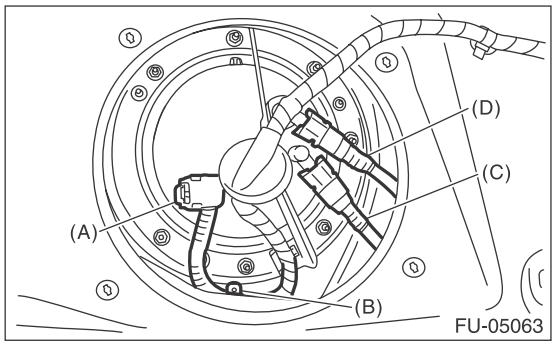

FU-05063

9) Remove the nuts securing the fuel pump upper plate to the fuel tank and remove the fuel pump upper plate.

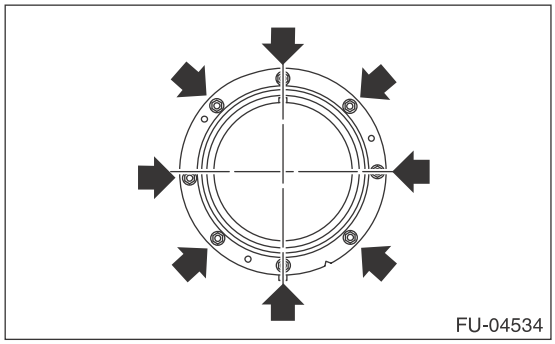
FU-04534

10) Remove the fuel pump assembly from the fuel tank.

B: INSTALLATION

Install in the reverse order of removal while being careful of the following.
- Make sure the sealing portion is free from fuel or foreign matter before installation.
- Align protrusion (A) of the gasket to the position shown in the figure.
- Insert the protrusion (B) of gasket to the fuel pump upper plate. (3 places)
- Align the protrusion (C) of fuel pump assembly with the cutout on the fuel pump upper plate.
- Tighten the nuts to the specified torque in the order as shown in the figure.

NOTE:
Use a new gasket and retainer.

Tightening torque:
4.4 N·m (0.4 kgf-m, 3.2 ft-lb)

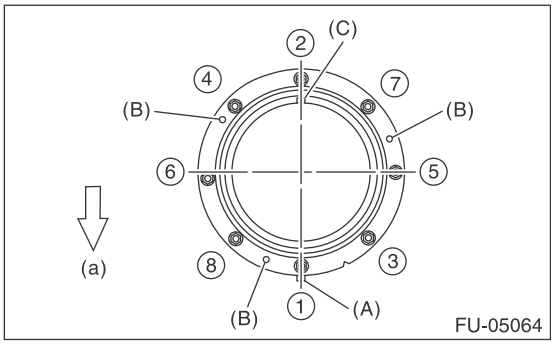

(a) Front side of vehicle

C: INSPECTION

1) Check that the fuel pump has no deformation, cracks or other damages.
2) Connect battery positive terminal to terminal No. 5 and battery ground terminal to terminal No. 6, and inspect the fuel pump operation.

WARNING:
- **Wipe off fuel completely.**
- **Keep the battery as far apart from fuel pump as possible.**
- **Do not run the fuel pump for a long time under non-load condition.**

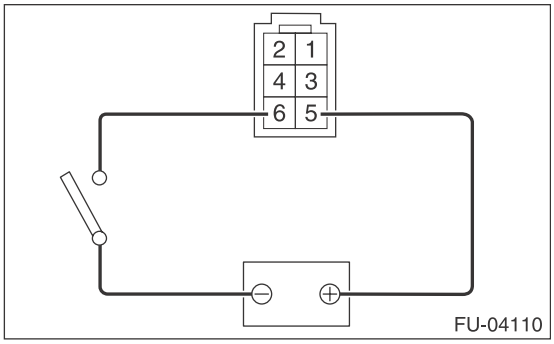

25.Fuel Level Sensor

A: REMOVAL

WARNING:
Place “NO OPEN FLAMES” signs near the working area.

CAUTION:
- **Be careful not to spill fuel.**
- **If the fuel gauge indicates that two thirds or more of the fuel is remaining, be sure to drain fuel before starting work to avoid the fuel to spill.**

NOTE:
The fuel level sensor is built in fuel pump assembly.
1) Remove the fuel pump assembly. <Ref. to FU(H4SO)-58, REMOVAL, Fuel Pump.>
2) Disconnect the connector from the fuel filter assembly.

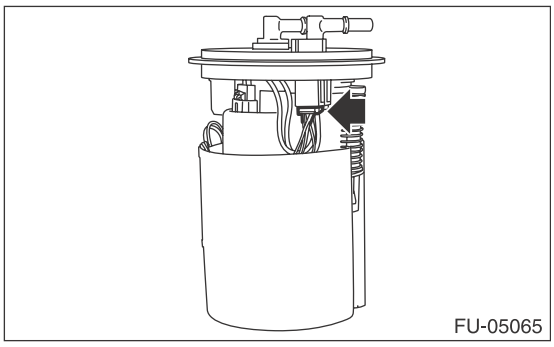

3) Remove the harness from the hooks (A) on the fuel chamber assembly and remove the fuel temperature sensor (B) from fuel chamber assembly.

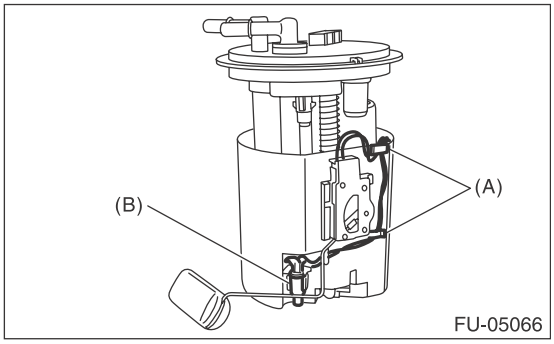

4) Press two claws (A) of the fuel level sensor, and slide the fuel level sensor in the direction of the arrow to remove the fuel level sensor.

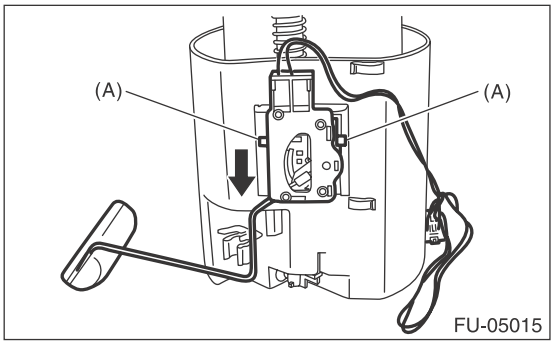

B: INSTALLATION

Install in the reverse order of removal.

C: INSPECTION

1) Check that the fuel level sensor has no damage.
2) Measure the fuel level sensor float position.

NOTE:
When inspecting the fuel level sensor, perform the work with the sensor installed to the fuel pump.
- Model with fuel level sensor bent in 3 locations

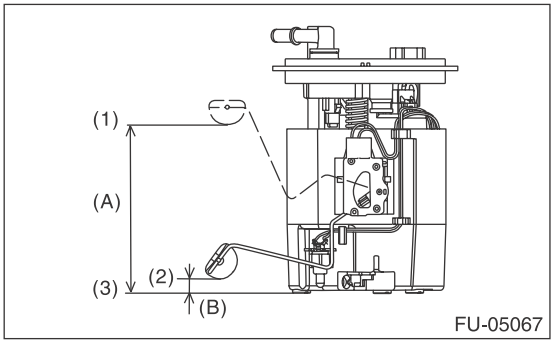

(1) FULL
(2) EMPTY
(3) Fuel tank seating surface

Float position	Standard
FULL to Fuel tank seating surface (A)	126.4±4 mm (4.976±0.157 in)
EMPTY to Fuel tank seating surface (B)	11.0±4 mm (0.433±0.157 in)

• Model with fuel level sensor bent in 2 locations

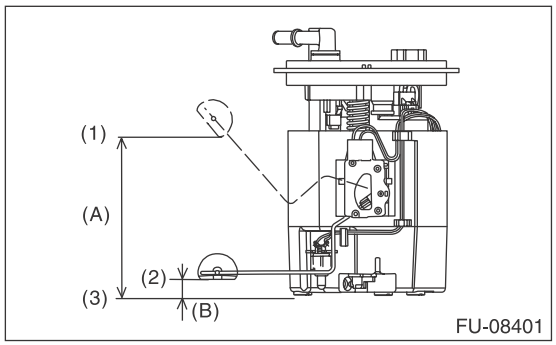

(1) FULL
(2) EMPTY
(3) Fuel tank seating surface

Float position	Standard
FULL to Fuel tank seating surface (A)	120.9±4 mm (4.759±0.157 in)
EMPTY to Fuel tank seating surface (B)	14.8±4 mm (0.583±0.157 in)

3) Measure the resistance between fuel level sensor terminals.

• Model with fuel level sensor bent in 3 locations

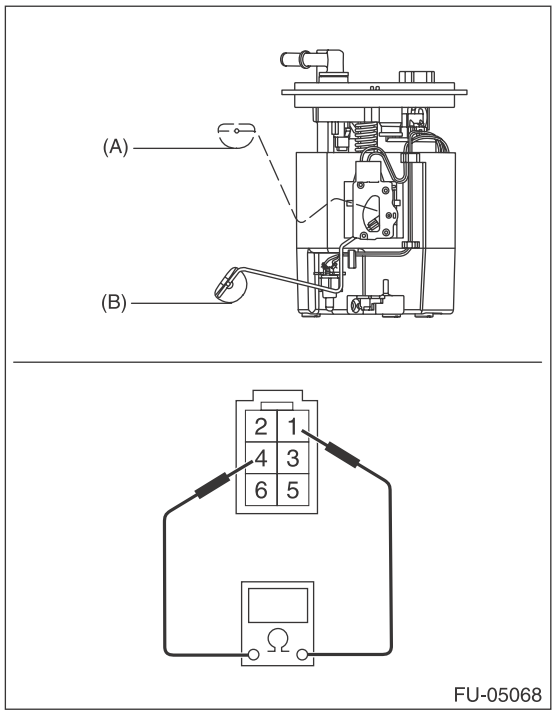

• Model with fuel level sensor bent in 2 locations

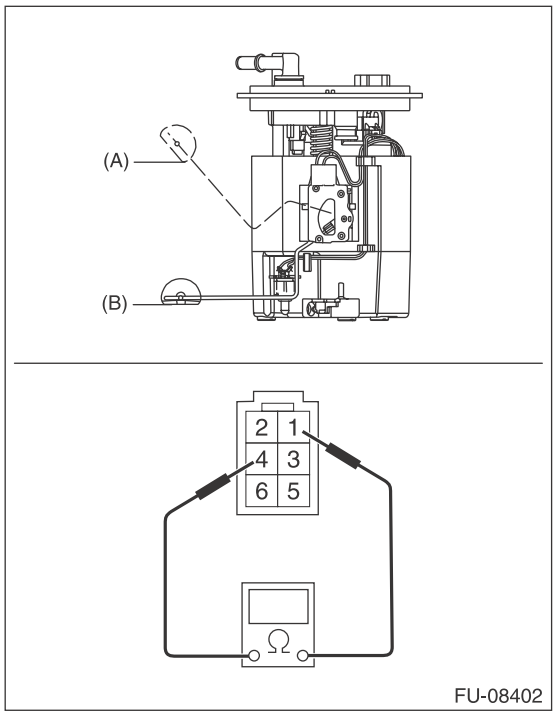

Float position	Terminal No.	Standard
FULL (A)	1 and 4	2.0±1.0 Ω
EMPTY (B)		31.9±1.0 Ω

26.Fuel Sub Level Sensor

A: REMOVAL

WARNING:
Place “NO OPEN FLAMES” signs near the working area.

CAUTION:
- **Be careful not to spill fuel.**
- **If the fuel gauge indicates that two thirds or more of the fuel is remaining, be sure to drain fuel before starting work to avoid the fuel to spill.**

1) Release the fuel pressure. <Ref. to FU(H4SO)-46, RELEASING OF FUEL PRESSURE, PROCEDURE, Fuel.>
2) Drain fuel. <Ref. to FU(H4SO)-46, DRAINING FUEL (WITH SUBARU SELECT MONITOR), PROCEDURE, Fuel.>
3) Disconnect the ground cable from battery.

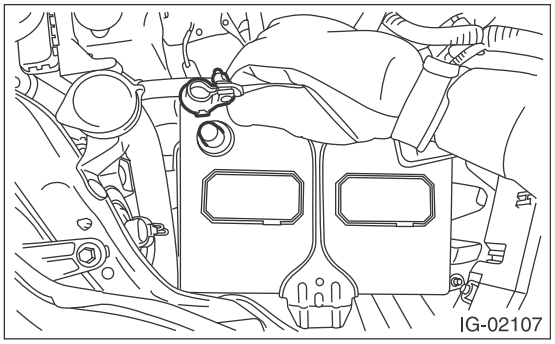
IG-02107

4) Remove the rear seat cushion. <Ref. to SE-32, REMOVAL, Rear Seat.>
5) Remove the service hole cover.

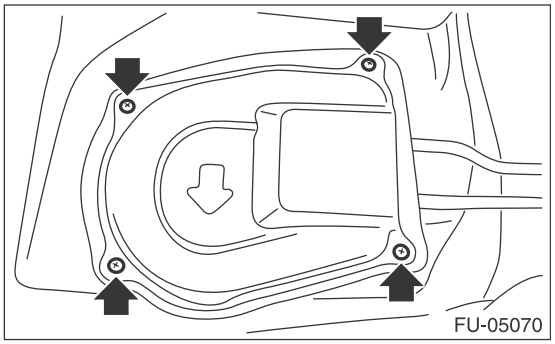
FU-05070

6) Disconnect the connector (A) from fuel sub level sensor, and remove the clip (B) securing the fuel cord from fuel sub level sensor protector.

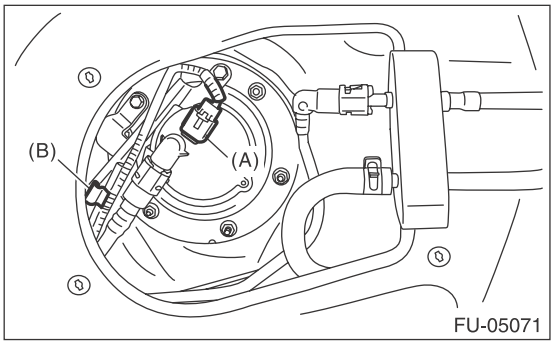

FU-05071

7) Remove the bolts (A) securing the fuel sub level sensor protector to the fuel sub level sensor upper plate, and remove the fuel sub level sensor protector.
8) Disconnect the quick connector on the fuel sub delivery tube (B). <Ref. to FU(H4SO)-66, REMOVAL, Fuel Delivery and Evaporation Lines.>

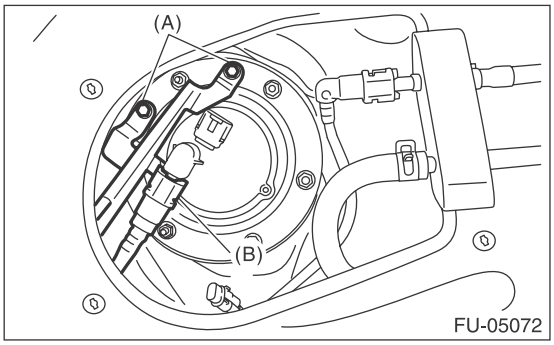

FU-05072

9) Remove the nuts securing the fuel sub level sensor upper plate to the fuel tank and remove the fuel sub level sensor upper plate.

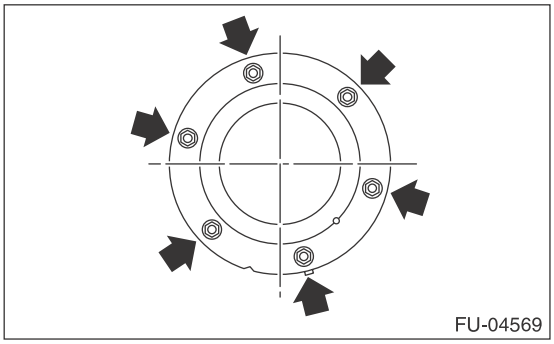
FU-04569

10) Remove the fuel sub level sensor from the fuel tank.

B: INSTALLATION

Install in the reverse order of removal while being careful of the following.

- Make sure the sealing portion is free from fuel or foreign matter before installation.
- Align protrusion (A) of the gasket to the position shown in the figure.
- Align protrusion (B) of the fuel sub level sensor to the cutout in the fuel sub level sensor upper plate.
- After tightening the bolts to the specified torque in the order indicated in the figure, install the fuel sub level sensor protector.

NOTE:
Use a new gasket and retainer.

Tightening torque:
4.4 N·m (0.4 kgf-m, 3.2 ft-lb)

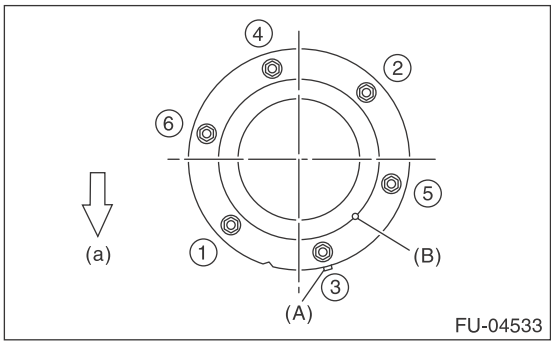

(a) Front side of vehicle

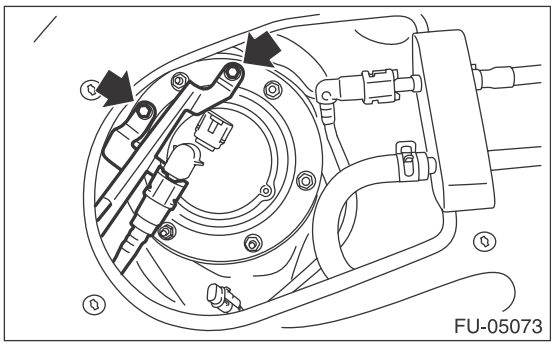

C: INSPECTION

1) Check that the fuel sub level sensor has no damage.
2) Measure the fuel sub level sensor float position.

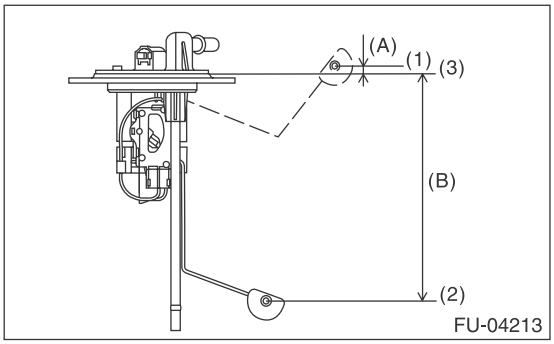

(1) FULL
(2) EMPTY
(3) Datum points

Float position	Standard
FULL to Datum point (A)	6.4±3.5 mm (0.252±0.138 in)
EMPTY to Datum point (B)	163.3±3.5 mm (6.429±0.138 in)

3) Measure the resistance between fuel sub level sensor terminals.

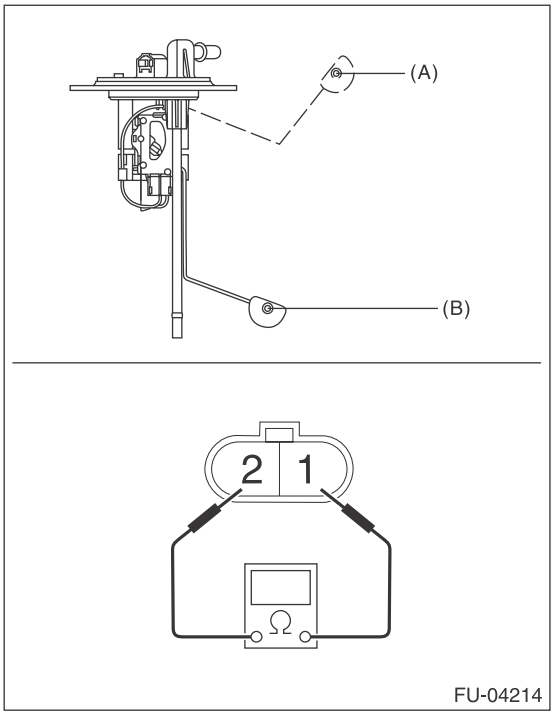

Float position	Terminal No.	Standard
FULL (A)	1 and 2	2.0±1.0 Ω
EMPTY (B)		62.1±1.0 Ω

27.Fuel Filter

A: REMOVAL

WARNING:
Place “NO OPEN FLAMES” signs near the working area.

CAUTION:
- **Be careful not to spill fuel.**
- **If the fuel gauge indicates that two thirds or more of the fuel is remaining, be sure to drain fuel before starting work to avoid the fuel to spill.**
- **Be careful not to drop or apply any impact to the fuel pump during work. This may deteriorate its performance.**

NOTE:
The fuel filter is built in fuel pump assembly.
1) Remove the fuel pump assembly. <Ref. to FU(H4SO)-58, REMOVAL, Fuel Pump.>
2) Remove the fuel level sensor and fuel temperature sensor. <Ref. to FU(H4SO)-60, REMOVAL, Fuel Level Sensor.>
3) Disconnect the connector from the fuel filter assembly.

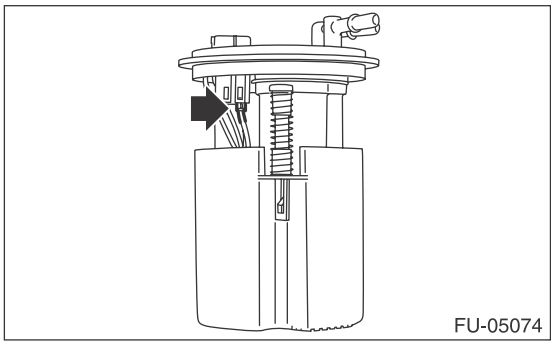
FU-05074

4) Disengage the claw connecting the fuel filter assembly and fuel chamber assembly, and separate fuel filter assembly and fuel chamber assembly.

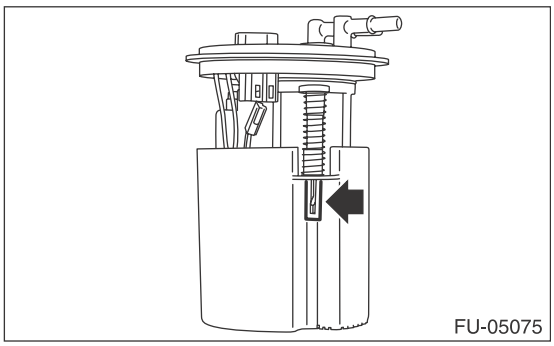
FU-05075

5) Remove the fuel pump holder from the fuel filter assembly.

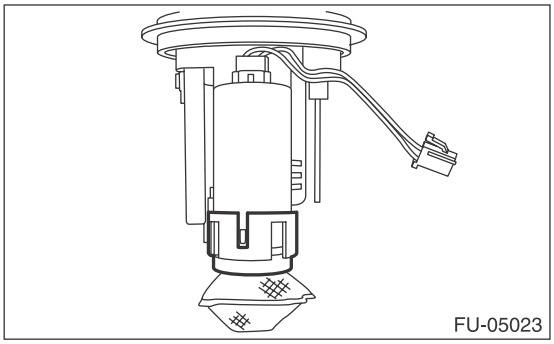
FU-05023

6) Remove the fuel pump from the fuel filter assembly.

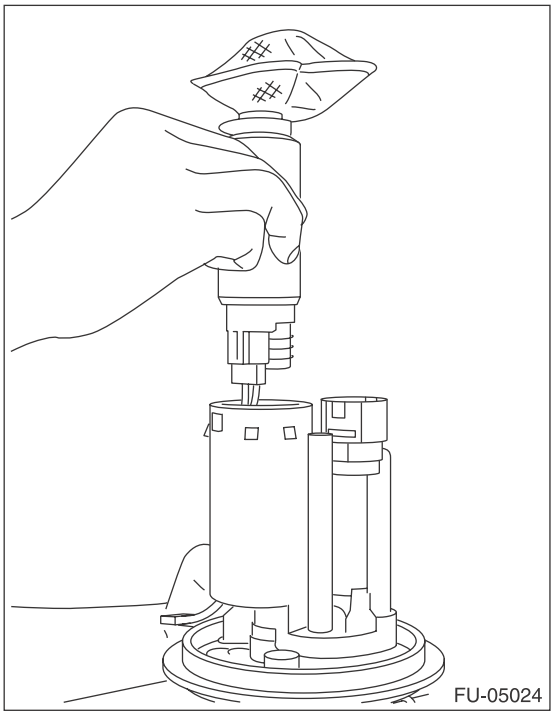
FU-05024

B: INSTALLATION

1) Assemble the gasket spacer (A) and support rubber cushion (B) to the fuel pump, and install the fuel pump to the fuel filter assembly.

NOTE:
- Use a new gasket spacer.
- Use a new support rubber cushion.
- Apply gasoline to the surface of gasket spacer and support rubber cushion.

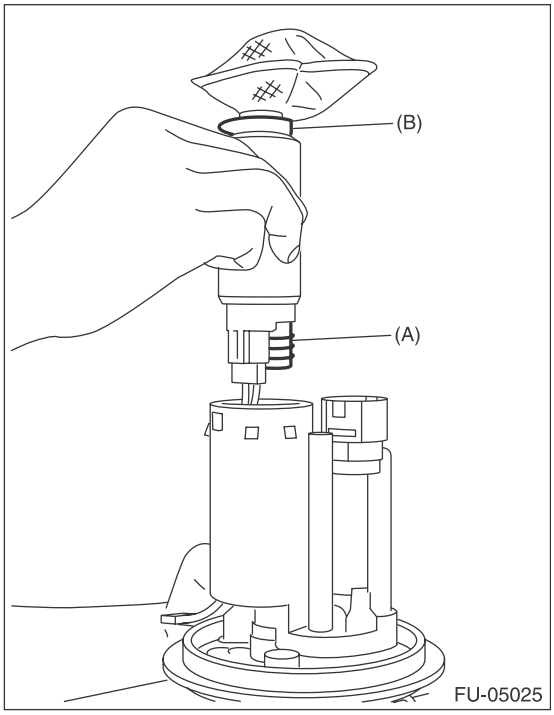

2) Install the fuel pump holder to the fuel filter assembly.

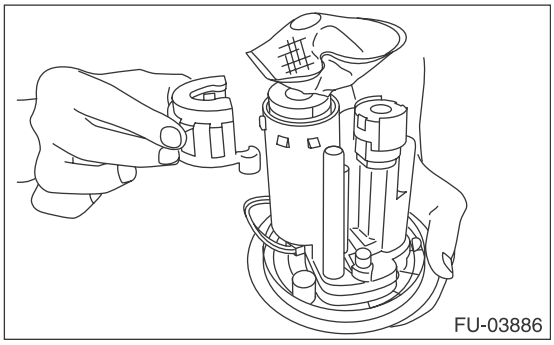

3) Install the pump module spring (A) to fuel filter assembly, and install the fuel chamber assembly (B).

NOTE:
- Use a new fuel chamber assembly.
- Check that the claw connecting the fuel filter assembly and fuel chamber assembly is securely fastened.

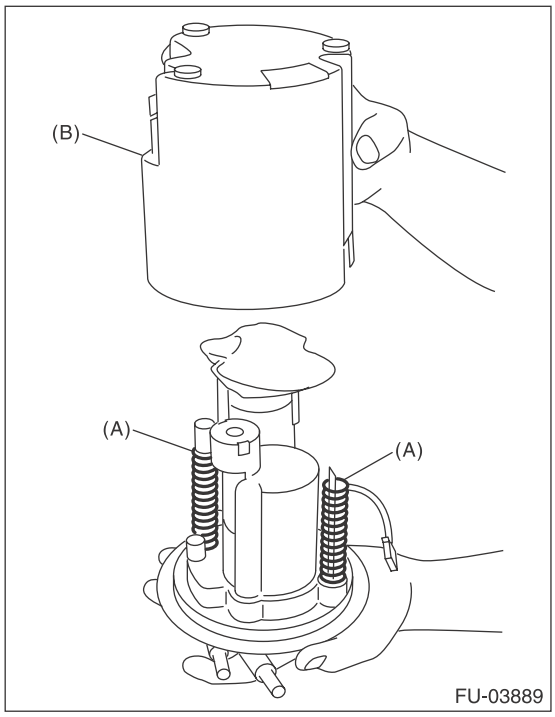

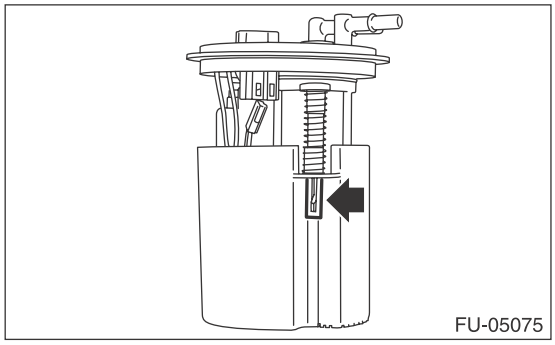

4) Connect the fuel pump connector.

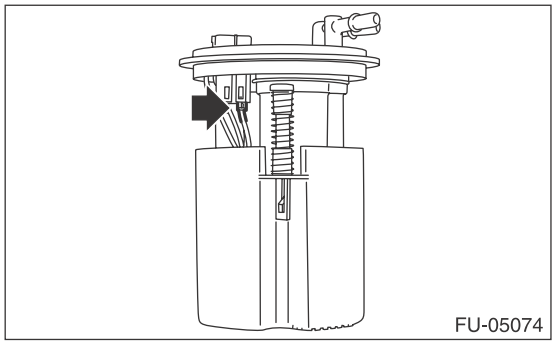

5) Install the fuel level sensor and fuel temperature sensor. <Ref. to FU(H4SO)-60, INSTALLATION, Fuel Level Sensor.>
6) Inspect the fuel level sensor. <Ref. to FU(H4SO)-60, INSPECTION, Fuel Level Sensor.>
7) Install the fuel pump assembly. <Ref. to FU(H4SO)-59, INSTALLATION, Fuel Pump.>

28.Fuel Delivery and Evaporation Lines

A: REMOVAL

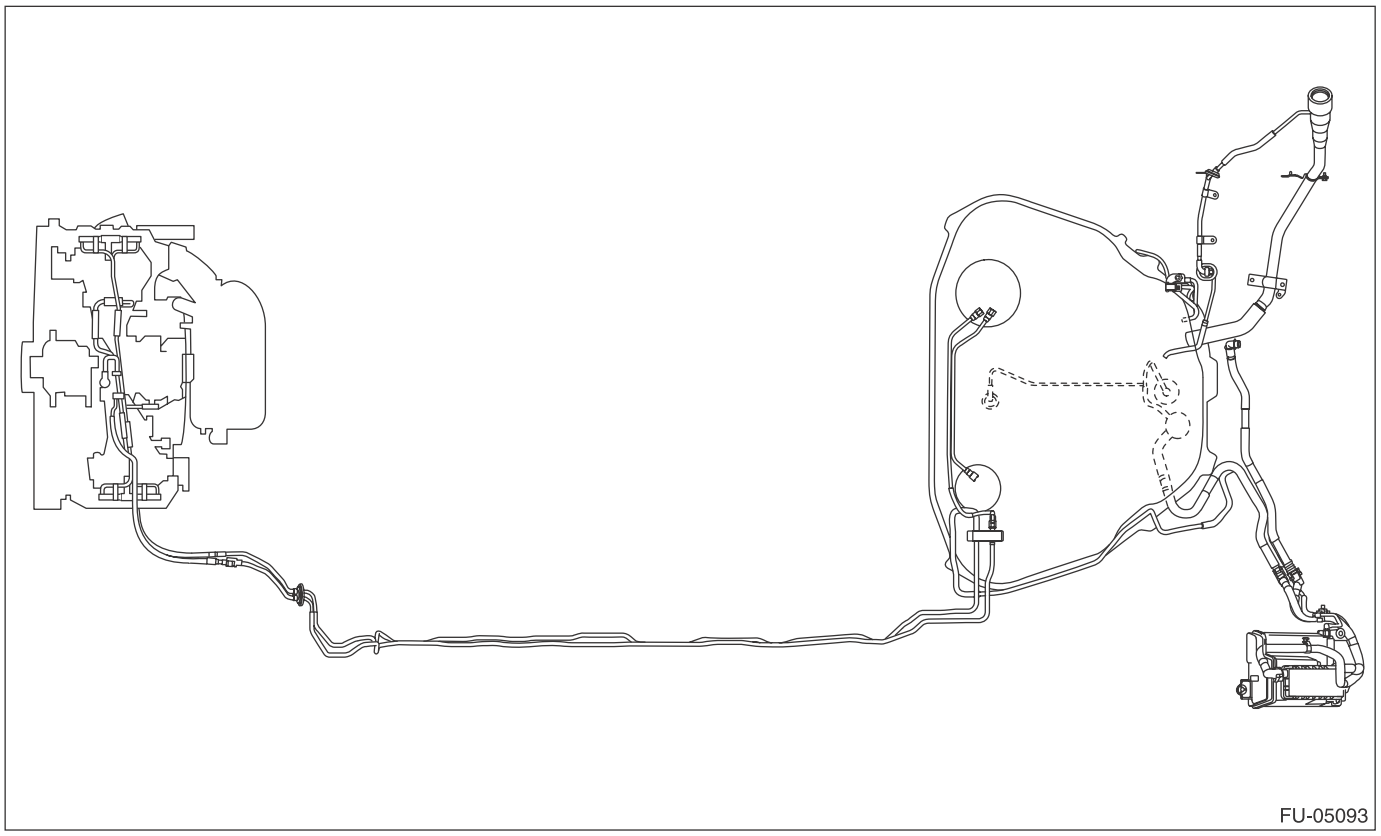

WARNING:
Place "NO OPEN FLAMES" signs near the working area.

CAUTION:
Be careful not to spill fuel.

1) Set the vehicle on a lift.
2) Release the fuel pressure. <Ref. to FU(H4SO)-46, RELEASING OF FUEL PRESSURE, PROCEDURE, Fuel.>
3) Open the fuel filler lid and remove the fuel filler cap.
4) Remove the floor mat. <Ref. to EI-162, REMOVAL, Floor Mat.>
5) In the engine compartment, disconnect the fuel delivery hoses (A) and evaporation hose (B).

CAUTION:
- **Be careful not to spill fuel.**
- **Catch the fuel from hoses using a container or cloth.**

(1) Remove the connect check cover from the fuel delivery hose.

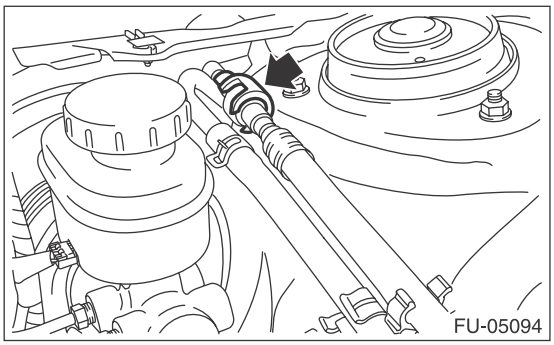

(2) Install the ST to the fuel pipe.

ST 42099AE000 QUICK CONNECTOR RELEASE

(3) Disconnect the quick connector of the fuel delivery hose by pushing the ST in the direction of the arrow.

(4) Remove the clip and disconnect the evaporation hose from the fuel pipe.

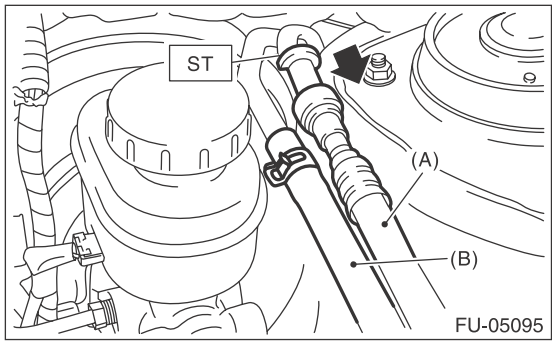

6) Remove the fuel tank. <Ref. to FU(H4SO)-48, REMOVAL, Fuel Tank.>
7) Remove the rear mud guard LH. <Ref. to EI-38, REMOVAL, Mud Guard.>
8) Remove the purge hose (A), purge pipe (B), air vent hose (C) and drain tube assembly (D).

NOTE:
Disconnect the quick connector as shown in the figure.

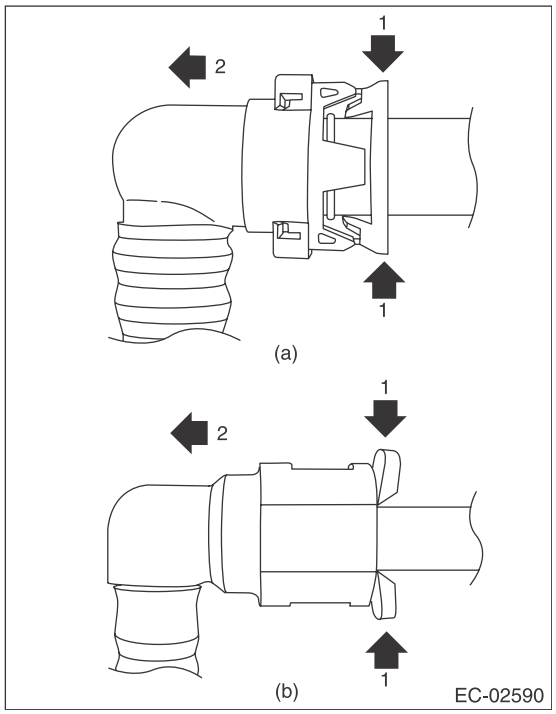

(a) Air vent hose (C), drain tube ASSY (D)
(b) Purge pipe (B)

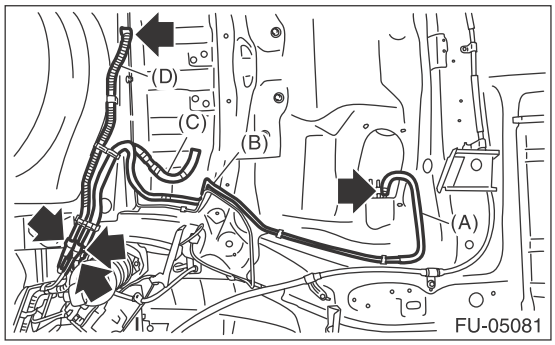

9) Remove the fuel pipe assembly from vehicle.
10) Disconnect the quick connector, and disconnect the fuel delivery tube and fuel sub delivery tube.
(1) Push the retainer in the direction of the arrow, disconnect the quick connector from pipe.

NOTE:
Clean the pipe and quick connector, if they are covered with dust.

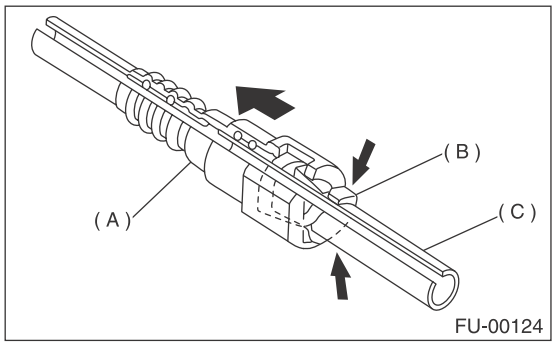

(A) Quick connector
(B) Retainer
(C) Pipe

(2) To prevent from damaging or entering foreign matter, wrap the pipes and quick connectors with plastic bag etc.

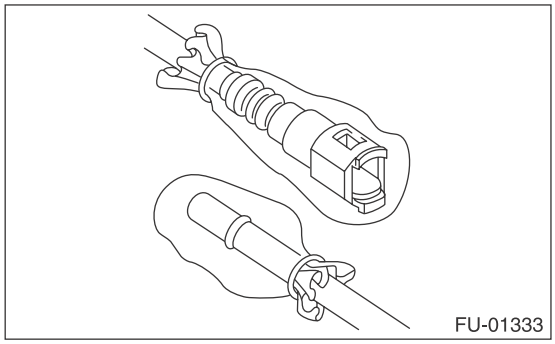

11) Remove the evaporation pipe.
(1) Remove the rear mud guard RH. <Ref. to EI-38, REMOVAL, Mud Guard.>

(2) Remove the evaporation hose.

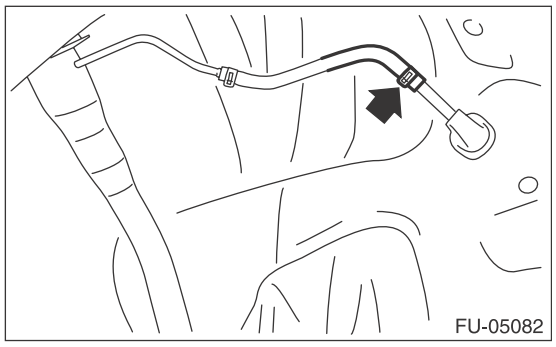

(3) Remove the trunk side trim panel assembly - side on RH. <Ref. to EI-109, REMOVAL, Rear Quarter Trim.>

(4) Remove the evaporation pipe protector.

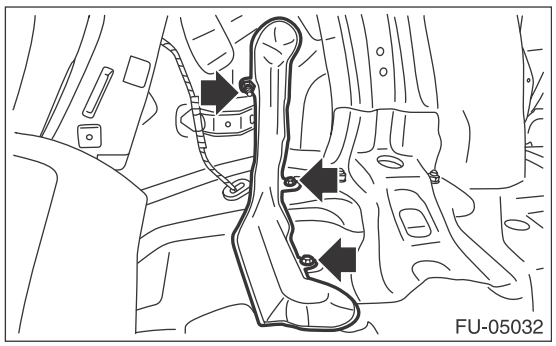

(5) Remove the evaporation pipe from the vehicle.

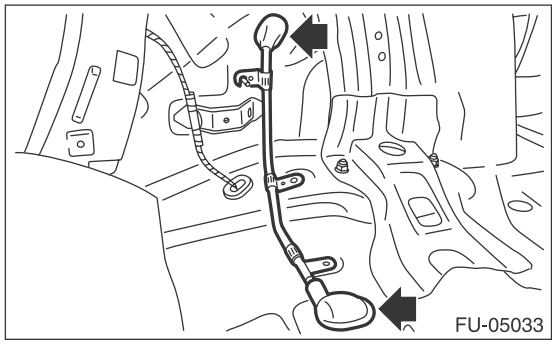

B: INSTALLATION

Install in the reverse order of removal while being careful of the following.

1. INSTALLATION OF EVAPORATION PIPE

1) Install the evaporation pipe to the vehicle.

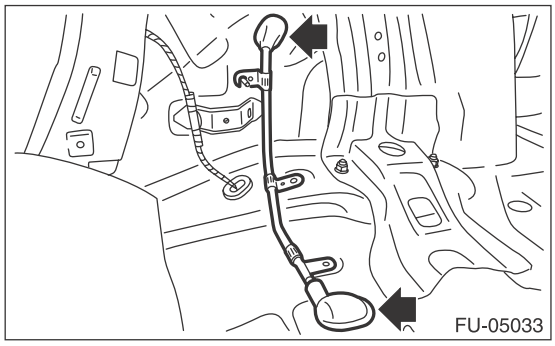

2) Install the evaporation pipe protector.

Tightening torque:
T1: 1 N·m (0.1 kgf-m, 0.7 ft-lb)
T2: 7.5 N·m (0.7 kgf-m, 5.4 ft-lb)

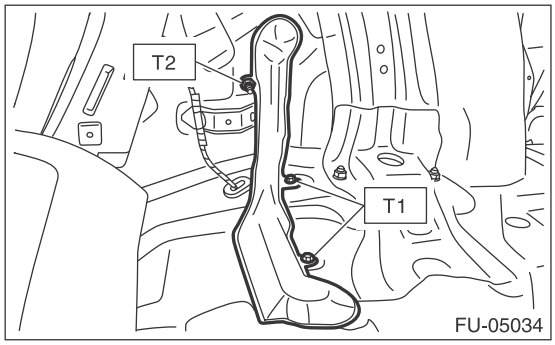

3) Install the trunk side trim panel assembly - side on RH. <Ref. to EI-119, INSTALLATION, Rear Quarter Trim.>

4) Install the evaporation hose.

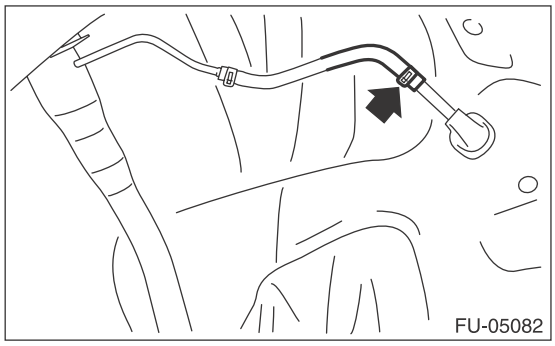

5) Install the rear mud guard RH. <Ref. to EI-38, INSTALLATION, Mud Guard.>

2. CONNECTING THE FUEL LINE QUICK CONNECTOR

CAUTION:
Make sure there are no damage or dust on connections. If necessary, clean seal surface of pipe.

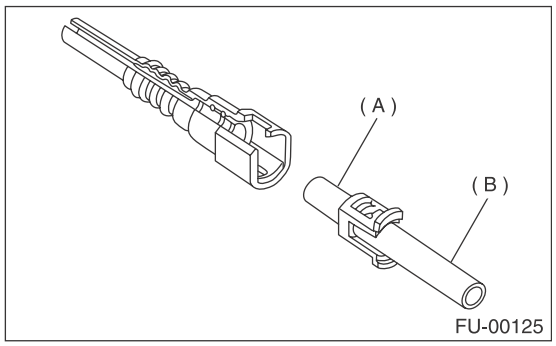

(A) Seal surface
(B) Pipe

1) Set the retainer to quick connector.

NOTE:
Use a new retainer.
2) Connect the quick connector to pipe.

CAUTION:
• Make sure that the quick connector is securely connected.

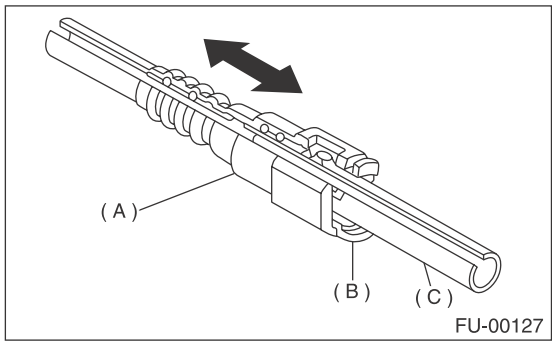

(A) Quick connector
(B) Retainer
(C) Pipe

• Make sure the two retainer pawls are engaged in their mating positions in the quick connector.

• Be sure to inspect tubes and their connections for any leakage of fuel.

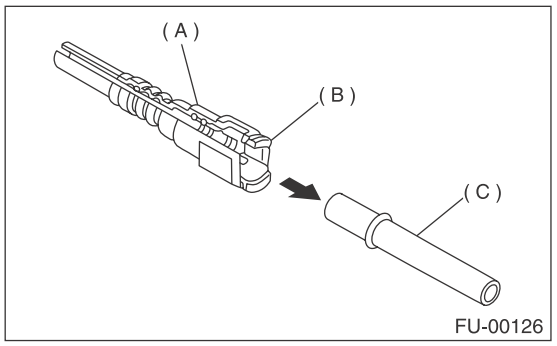

(A) Quick connector
(B) Retainer
(C) Pipe

3. EVAPORATION HOSE CONNECTION

Connect the evaporation hose to the pipe with an overlap of 15 to 20 mm (0.59 to 0.79 in).

L = 17.5±2.5 mm (0.689±0.098 in)

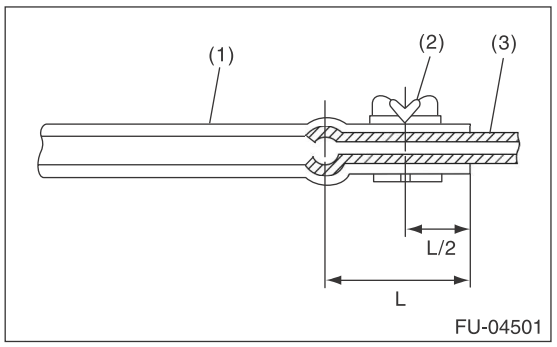

(1) Hose
(2) Clip
(3) Pipe

4. CONNECTING THE EVAPORATION LINE QUICK CONNECTOR

CAUTION:
- **Make sure there are no damage or dust on connections. If necessary, clean the seal surface of the pipe.**
- **Make sure that the quick connector is securely connected.**

Connect the quick connector as shown in the figure.

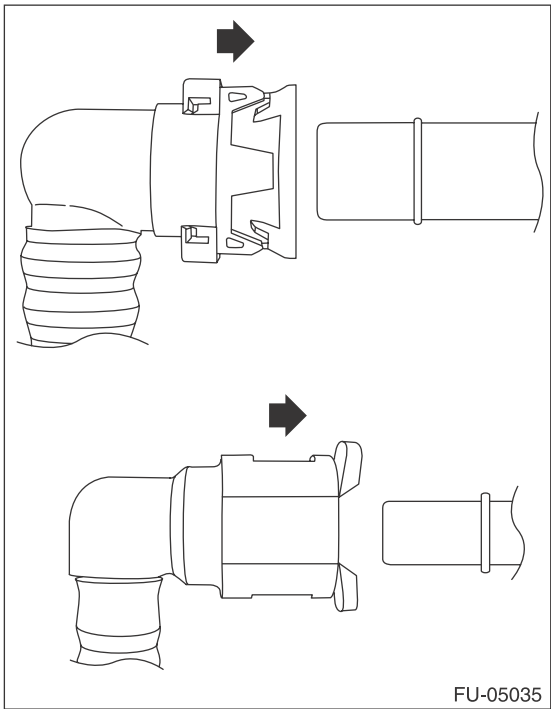

C: INSPECTION

1) Check that the fuel pipe has no deformation, cracks or other damages.
2) Check that the hose and tube have no cracks, damage or loose part.

29.Fuel System Trouble in General

A: INSPECTION

Trouble	Possible cause	Corrective action
Insufficient fuel supply to injector	a. Fuel pump does not operate.	
	❍ Defective terminal contact	Inspect contact, especially ground, and tighten it securely.
	❍ Trouble in electromagnetic or electronic circuit parts	Replace the faulty parts.
	b. Decline of fuel pump function	Replace the fuel pump.
	c. Clogged fuel filter	Replace the fuel filter. Clean or replace the fuel tank if necessary.
	d. Clogged or bent pipe, hose or tube of fuel line	Clean, correct or replace the pipe, hose or tube of the fuel line.
	e. Air is mixed in fuel system.	Check the fuel line connections, and repair or replace the defective part.
	f. Damaged diaphragm of pressure regulator	Replace the pressure regulator.
Leakage or run-out of fuel	a. Loose connection in pipe, hose or tube of fuel line	Check the fuel line connections, and repair or replace the defective part.
	b. Cracks in pipe, hose or tube of fuel line	Replace the pipe, hose or tube of the fuel line.
	c. Defective welded part of fuel tank	Replace the fuel tank.
	d. Clogged or bent pipe, hose or tube of fuel line	Clean, correct or replace the pipe, hose or tube of the fuel line.
Gasoline smell inside of compartment	a. Loose connection in pipe, hose or tube of fuel line	Check the fuel line connections, and repair or replace the defective part.
	b. Improper installation of rubber saucer	Correct or replace the rubber saucer.
	c. Defective canister	Replace the canister.
Defective fuel gauge	a. Defective operation of fuel level sensor	Replace the fuel level sensor.
	b. Defective operation of combination meter	Replace the combination meter.
Noise	a. Big operation noise or vibration from fuel pump	Replace the fuel pump.

NOTE:
• When the vehicle is left unattended for an extended period of time, water may accumulate in the fuel tank. Fill fuel fully to prevent the problem.
• In snow-covered areas, mountainous areas, skiing areas, etc. where ambient temperatures drop to 0°C (32°F) or less throughout the winter season, use a water removing agent in the fuel system to prevent freezing fuel system and accumulating water.
• When water is accumulated in fuel filter, fill the water removing agent in the fuel tank.
• Before using water removing agent, follow the cautions noted on the bottle.

EMISSION CONTROL (AUX. EMISSION CONTROL DEVICES)

EC(H4SO)

		Page
1.	General Description	2
2.	Front Catalytic Converter	3
3.	Rear Catalytic Converter	4
4.	Canister	5
5.	Purge Control Solenoid Valve	9
6.	EGR Valve	11
7.	Fuel Level Sensor	12
8.	Fuel Temperature Sensor	13
9.	Fuel Sub Level Sensor	14
10.	Fuel Tank Pressure Sensor	15
11.	Drain Filter	17
12.	Drain Valve	18
13.	PCV Hose Assembly	19
14.	PCV Valve	20

1. General Description

A: CAUTION

• Wear appropriate work clothing, including a cap, protective goggles and protective shoes when performing any work.
• Remove contamination including dirt and corrosion before removal, installation or disassembly.
• Keep the disassembled parts in order and protect them from dust and dirt.
• Before removal, installation or disassembly, be sure to clarify the failure. Avoid unnecessary removal, installation, disassembly and replacement.
• Vehicle components are extremely hot after driving. Be wary of receiving burns from heated parts.
• Be sure to tighten fasteners including bolts and nuts to the specified torque.
• Place shop jacks or rigid racks at the specified points.
• Before disconnecting connectors of sensors or units, be sure to disconnect the ground cable from battery.

B: PREPARATION TOOL

1. SPECIAL TOOL

ILLUSTRATION	TOOL NUMBER	DESCRIPTION	REMARKS
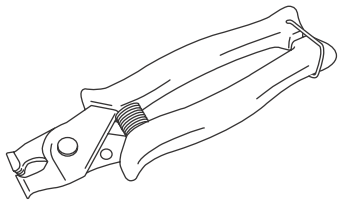 ST18353AA000	18353AA000	CLAMP PLIERS	• Used for removing and installing the PCV hose. • This is a general tool made by the French company CAILLAU. (code) 54.0.000.205 To make this easier to obtain, it has been provided with a tool number.

2. GENERAL TOOL

TOOL NAME	REMARKS
Circuit tester	Used for measuring resistance and voltage.
Mighty Vac	Used for inspection of the two-way valve.

2. Front Catalytic Converter

A: REMOVAL

The front catalytic converter is integrated into the front exhaust pipe; therefore, refer to “Front Exhaust Pipe” for the removal procedure. <Ref. to EX(H4SO)-4, REMOVAL, Front Exhaust Pipe.>

B: INSTALLATION

The front catalytic converter is integrated into the front exhaust pipe; therefore, refer to “Front Exhaust Pipe” for the installation procedure. <Ref. to EX(H4SO)-5, INSTALLATION, Front Exhaust Pipe.>

C: INSPECTION

1) Check the connections and welds for exhaust leaks.
2) Check for hole or rust.

3. Rear Catalytic Converter

A: REMOVAL

The rear catalytic converter is integrated into the center exhaust pipe. Refer to “Center Exhaust Pipe” for removal procedures. <Ref. to EX(H4SO)-7, REMOVAL, Center Exhaust Pipe.>

B: INSTALLATION

The rear catalytic converter is integrated into the center exhaust pipe. Refer to “Center Exhaust Pipe” for installation procedures. <Ref. to EX(H4SO)-7, INSTALLATION, Center Exhaust Pipe.>

C: INSPECTION

1) Check the connections and welds for exhaust leaks.
2) Check for hole or rust.

4. Canister

A: REMOVAL

1) Remove the rear wheel LH.
2) Lift up the vehicle.
3) Remove the rear mud guard LH. <Ref. to EI-38, REMOVAL, Mud Guard.>
4) Disconnect the quick connectors of the vent tube (A), canister drain tube (B) and charge tube (C), and remove the tubes from clips (D).

NOTE:
Disconnect the quick connector as shown in the figure.

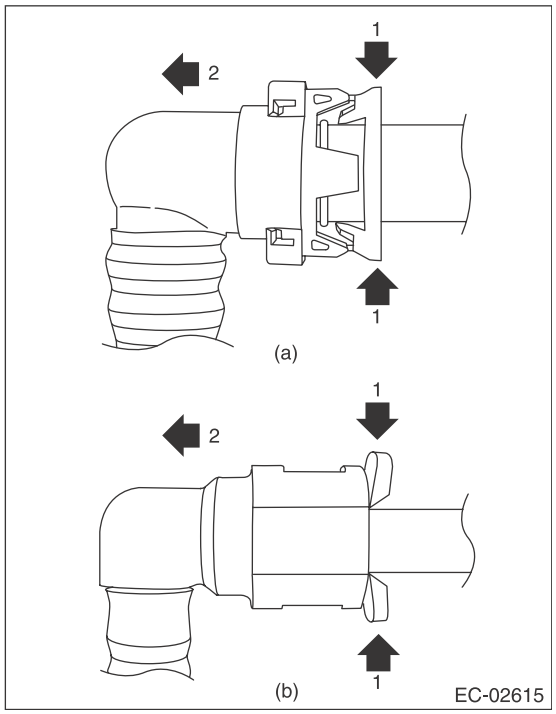

(a) Vent tube (A) and canister drain tube (B)
(b) Charge tube (C)

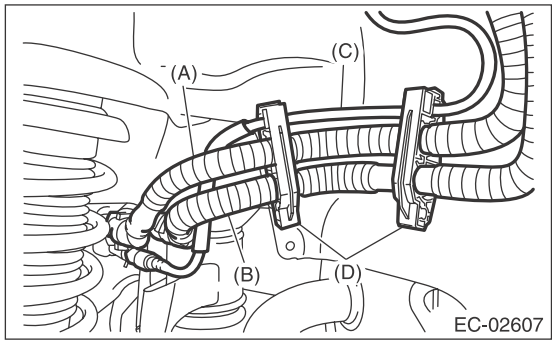

5) Remove the clip holding the rear wiring harness.

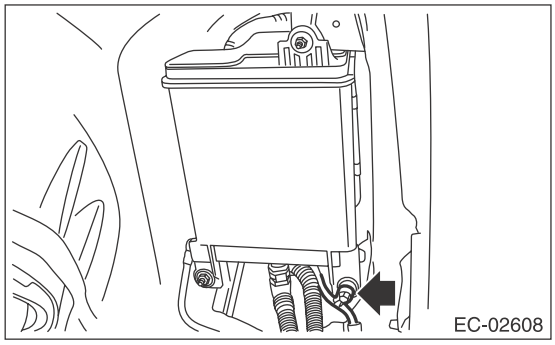

6) Remove the canister from vehicle.

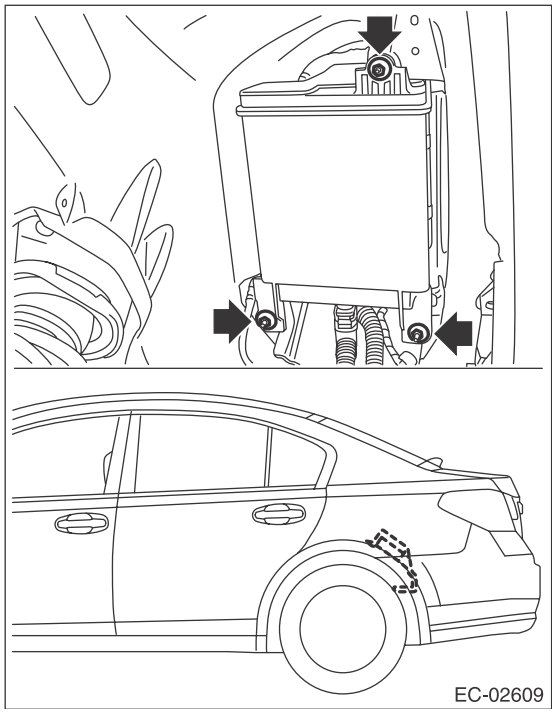

7) Disconnect the connector from drain valve.

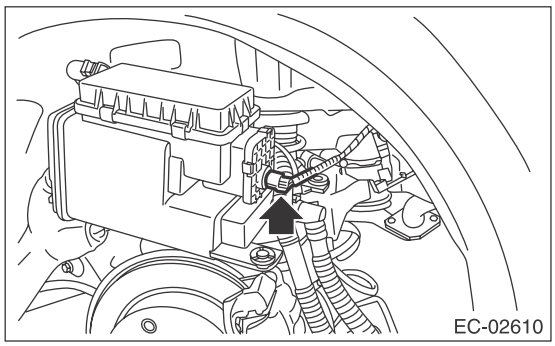

8) Disconnect the vent tube (A), canister drain tube (B) and charge tube (C), and remove the canister drain tube (B) from clip (D).

NOTE:
Disconnect the quick connector as shown in the figure.

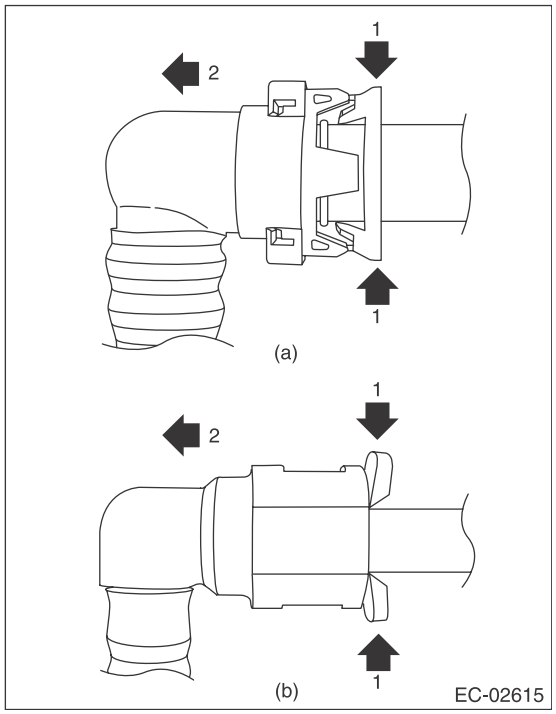

(a) Vent tube (A) and canister drain tube (B)
(b) Charge tube (C)

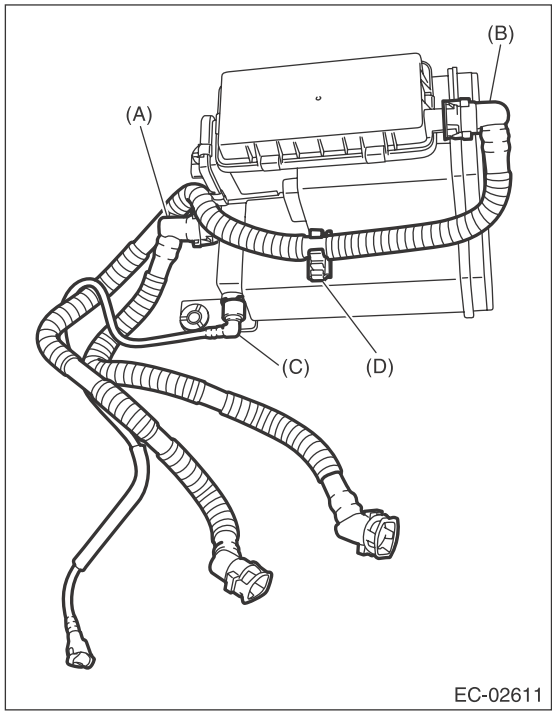

B: INSTALLATION

1) Install the vent tube (A), canister drain tube (B) and charge tube (C), and install the canister drain tube (B) to clip (D).

CAUTION:
• Make sure there are no damage or dust on connections. If necessary, clean the seal surface of the pipe.
• Make sure that the quick connector is securely connected.

NOTE:
Connect the quick connector as shown in the figure.

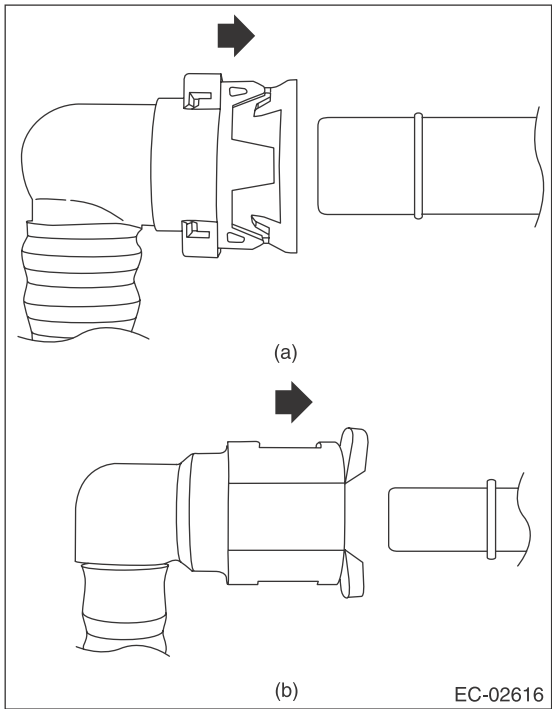

(a) Vent tube (A) and canister drain tube (B)
(b) Charge tube (C)

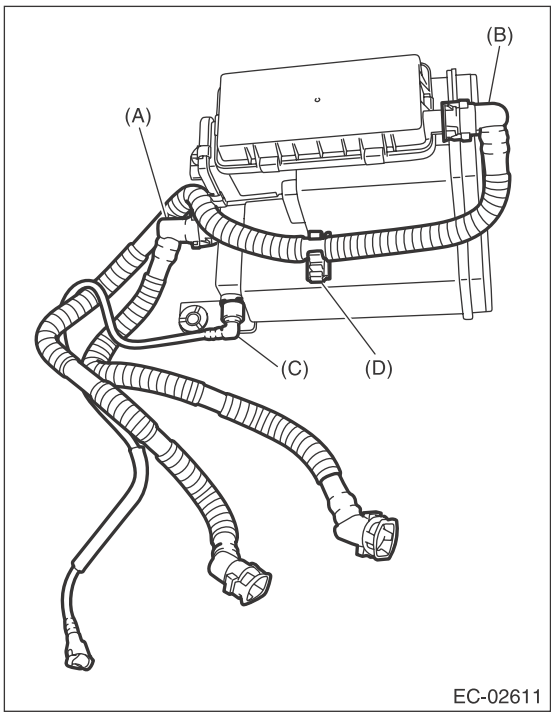

2) Connect the connector to the drain valve.

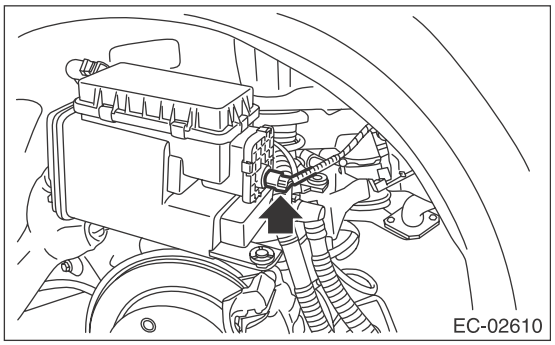

3) Install the canister to the vehicle.

Tightening torque:
8 N·m (0.8 kgf-m, 5.9 ft-lb)

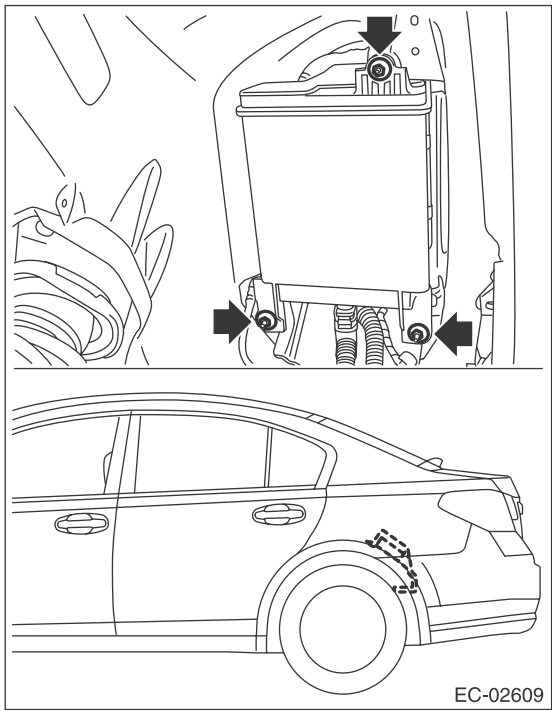

4) Secure the rear wiring harness with clip.

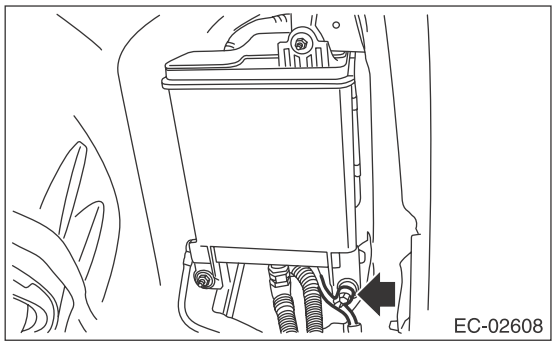

5) Attach all tubes to clips (D), and connect the quick connectors of the vent tube (A), canister drain tube (B) and charge tube (C).

CAUTION:
• Make sure there are no damage or dust on connections. If necessary, clean the seal surface of the pipe.
• Make sure that the quick connector is securely connected.

NOTE:
Connect the quick connector as shown in the figure.

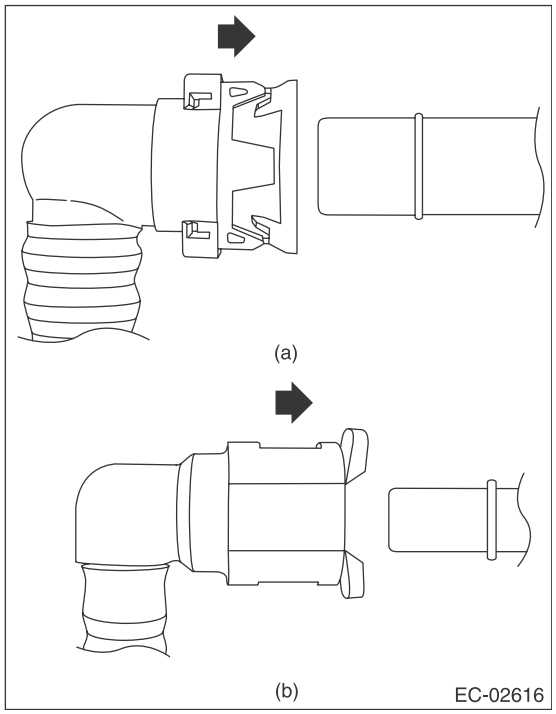

(a) Vent tube (A) and canister drain tube (B)
(b) Charge tube (C)

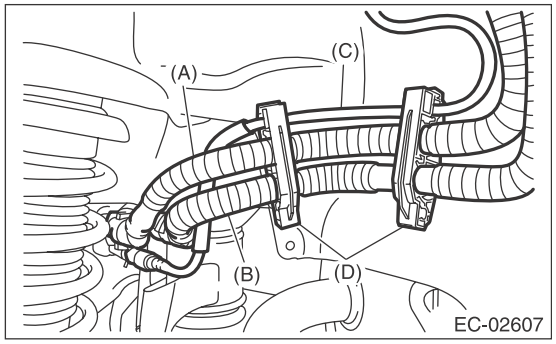

6) Install the rear mud guard LH. <Ref. to EI-38, INSTALLATION, Mud Guard.>
7) Lower the vehicle.
8) Install the rear wheel LH.

Tightening torque:
120 N·m (12.2 kgf-m, 88.5 ft-lb)

C: INSPECTION

1) Check that the canister has no deformation, cracks or other damages.
2) Check that the tube has no cracks, damage or loose part.

5. Purge Control Solenoid Valve

A: REMOVAL

1) Disconnect the ground cable from battery.

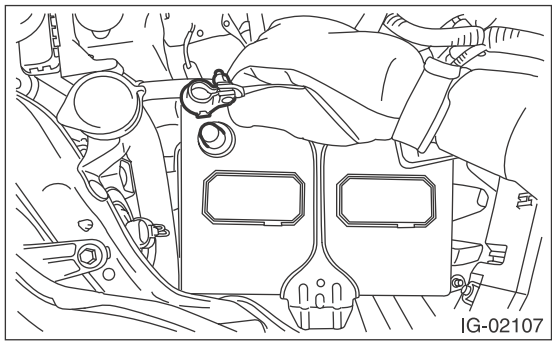

2) Remove the air intake boot assembly. <Ref. to IN(H4SO)-8, REMOVAL, Air Intake Boot.>
3) Disconnect the purge control solenoid valve connector (A) and evaporation hose (B), and then remove the purge control solenoid valve.

- U6 model

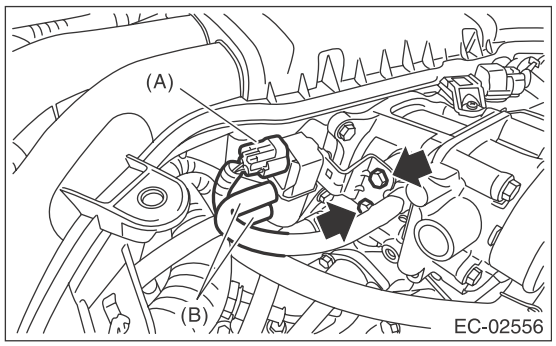

- U5 model

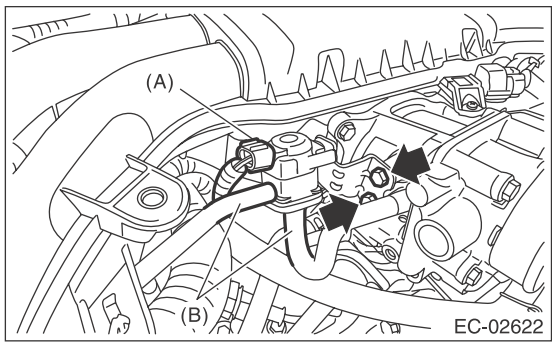

B: INSTALLATION

Install in the reverse order of removal.

NOTE:
Connect the evaporation hose as shown in the figure.

- U6 model

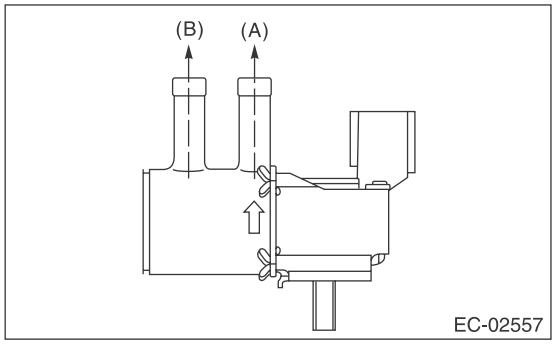

- U5 model

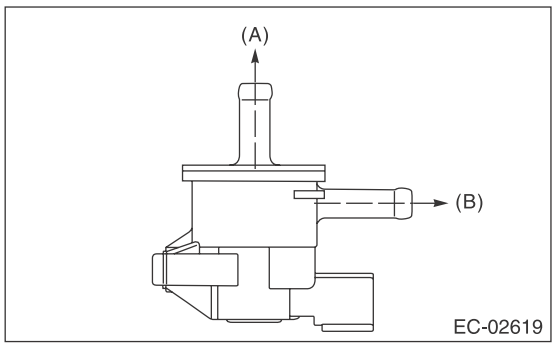

(A) To multifunction duct
(B) To evaporation line

Tightening torque:
6.4 N·m (0.7 kgf-m, 4.7 ft-lb)

- U6 model

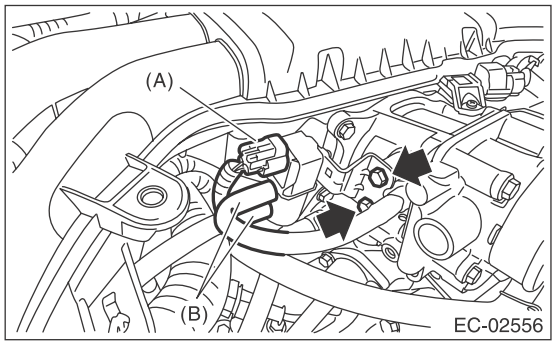

- U5 model

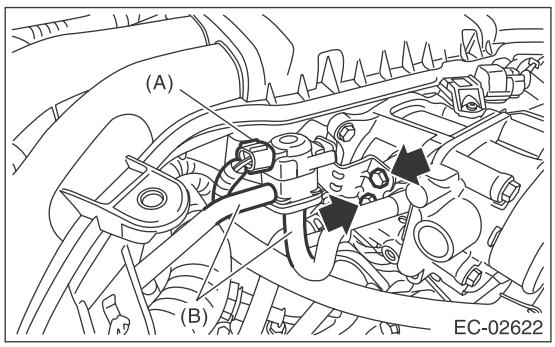

C: INSPECTION

1. PURGE CONTROL SOLENOID VALVE

1) Check that the purge control solenoid valve has no deformation, cracks or other damages.
2) Measure the resistance between the purge control solenoid valve terminals.

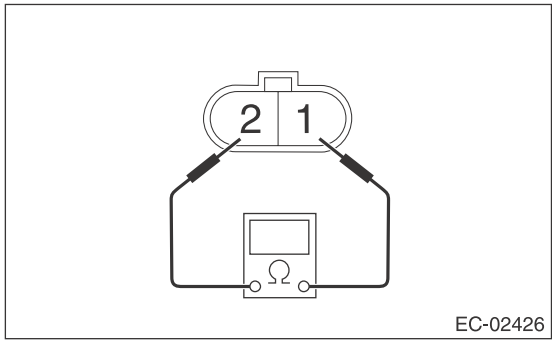

- U6 model

Terminal No.	Standard
1 and 2	24±3 Ω (when 20°C (68°F))

- U5 model

Terminal No.	Standard
1 and 2	24.5±1.5 Ω (when 20°C (68°F))

3) Check that air does not come out from (B) when air is blown into (A).

- U6 model

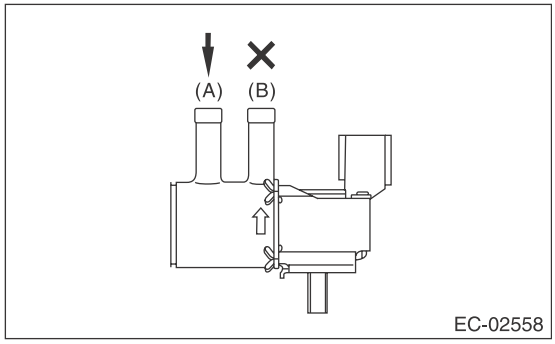

- U5 model

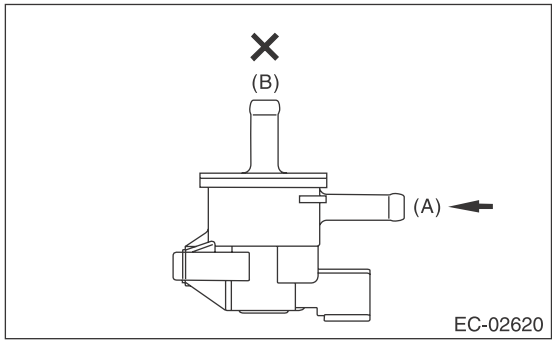

4) With terminal No. 1 connected to the battery positive terminal and terminal No. 2 to the battery ground terminal, check that air comes out from (B) when air is blown into (A).

- U6 model

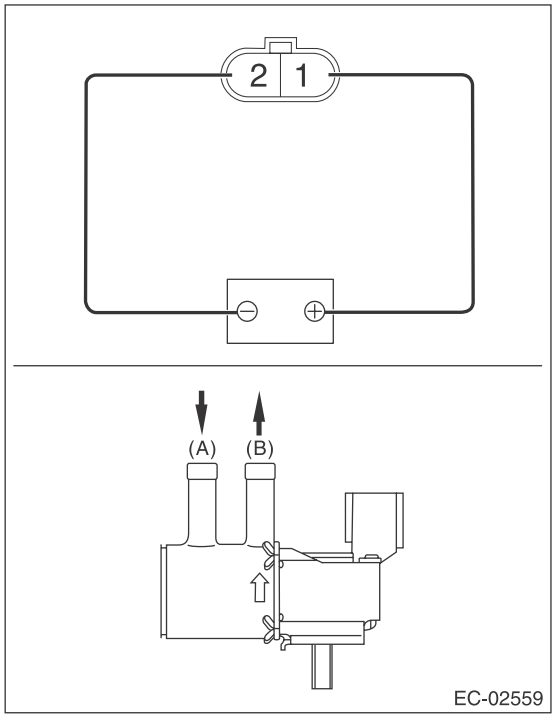

- U5 model

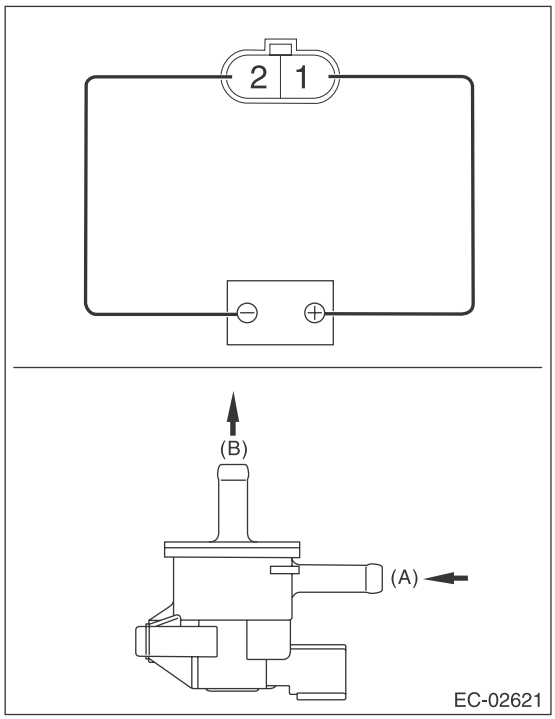

2. OTHER INSPECTIONS

Check that the evaporation hose has no cracks, damage or loose part.

6. EGR Valve

A: REMOVAL

For removal procedures, refer to “FU” section. <Ref. to FU(H4SO)-31, REMOVAL, EGR Valve.>

B: INSTALLATION

For installation procedures, refer to “FU” section. <Ref. to FU(H4SO)-31, INSTALLATION, EGR Valve.>

C: INSPECTION

Refer to “FU” for inspection procedures. <Ref. to FU(H4SO)-31, INSPECTION, EGR Valve.>

7. Fuel Level Sensor

A: REMOVAL

For removal procedures, refer to the “FU(H4SO)” section. <Ref. to FU(H4SO)-60, REMOVAL, Fuel Level Sensor.>

B: INSTALLATION

For installation procedures, refer to the “FU(H4SO)” section. <Ref. to FU(H4SO)-60, INSTALLATION, Fuel Level Sensor.>

C: INSPECTION

For inspection procedures, refer to the “FU(H4SO)” section. <Ref. to FU(H4SO)-60, INSPECTION, Fuel Level Sensor.>

8. Fuel Temperature Sensor

A: REMOVAL

The fuel temperature sensor and fuel level sensor are integrated into one unit; therefore, refer to “Fuel Level Sensor” for removal procedure. <Ref. to FU(H4SO)-60, REMOVAL, Fuel Level Sensor.>

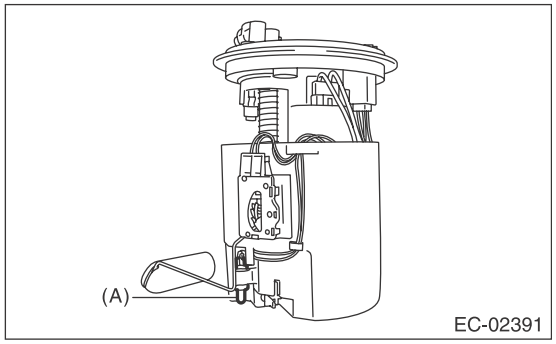

(A) Fuel temperature sensor

B: INSTALLATION

The fuel temperature sensor and fuel level sensor are integrated into one unit; therefore, refer to “Fuel Level Sensor” for installation procedure. <Ref. to FU(H4SO)-60, INSTALLATION, Fuel Level Sensor.>

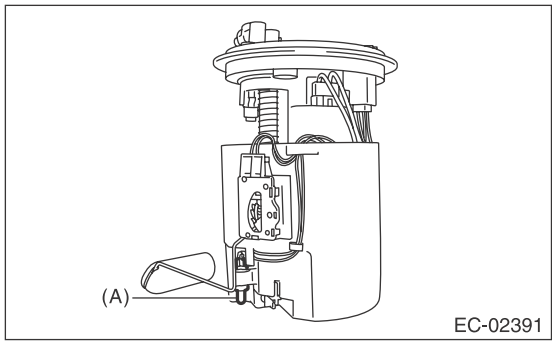

(A) Fuel temperature sensor

C: INSPECTION

1) Check the fuel temperature sensor for deformation, cracks or other damages.
2) Measure the resistance between fuel temperature sensor terminals.

CAUTION:
Make sure of the circuit tester spec and do not apply a voltage of 3 V or more when measuring the resistance. Otherwise the fuel temperature sensor will be damaged.

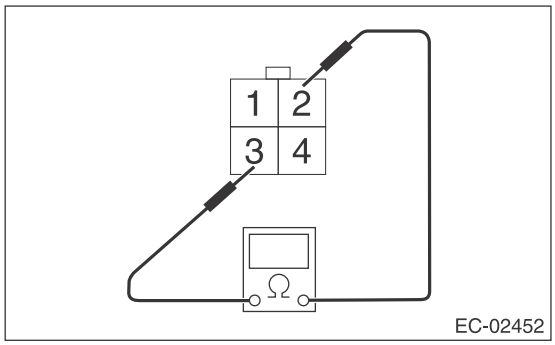

Temperature	Terminal No.	Standard
–10°C (14°F)	2 and 3	9.2±2.2 kΩ (at a set current of 0.5 mA)
20°C (68°F)		2.5±0.2 kΩ (at a set current of 1.0 mA)
50°C (122°F)		$0.84^{+0.06}_{-0.05}$ kΩ (at a set current of 1.0 mA)

9. Fuel Sub Level Sensor

A: REMOVAL

For removal procedures, refer to the “FU(H4SO)” section. <Ref. to FU(H4SO)-62, REMOVAL, Fuel Sub Level Sensor.>

B: INSTALLATION

For installation procedures, refer to the “FU(H4SO)” section. <Ref. to FU(H4SO)-63, INSTALLATION, Fuel Sub Level Sensor.>

C: INSPECTION

For inspection procedures, refer to the “FU(H4SO)” section. <Ref. to FU(H4SO)-63, INSPECTION, Fuel Sub Level Sensor.>

10.Fuel Tank Pressure Sensor

A: REMOVAL

WARNING:
Place "NO OPEN FLAMES" signs near the working area.

1) Disconnect the ground cable from battery.

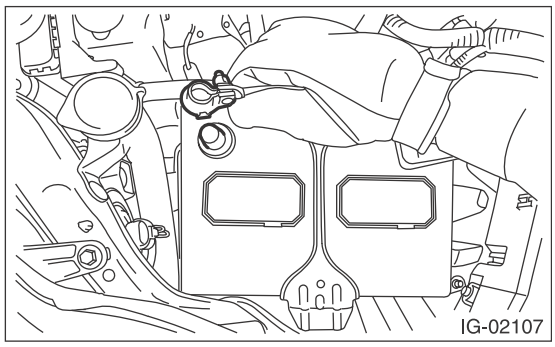

2) Open the fuel filler lid and remove the fuel filler cap.
3) Lift up the vehicle.
4) Disconnect connector (A) from fuel tank pressure sensor.
5) Pull out the vacuum hose (B) from vehicle.
6) Remove the fuel tank pressure sensor from the bracket.

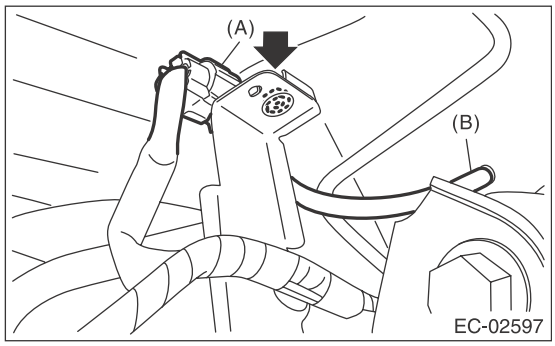

7) Disconnect the pressure hose from fuel tank pressure sensor and remove the fuel tank pressure sensor.

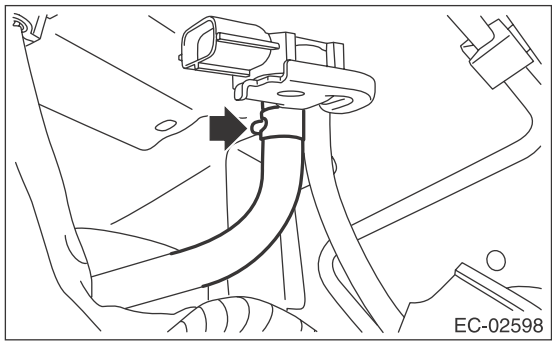

B: INSTALLATION

Install in the reverse order of removal.

Tightening torque:
7.35 N·m (0.7 kgf-m, 5.4 ft-lb)

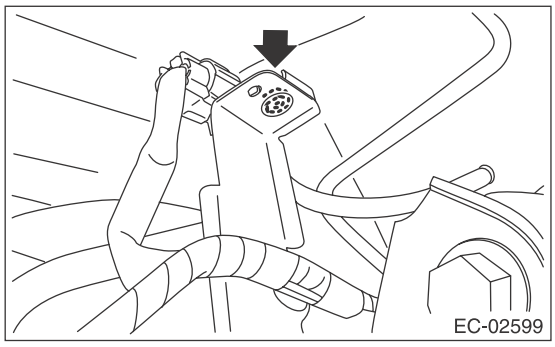

C: INSPECTION

1. FUEL TANK PRESSURE SENSOR

1) Check that the fuel tank pressure sensor does not have deformation, cracks or other damages.
2) Connect dry-cell battery positive terminal to terminal No. 3 and dry-cell battery ground terminal to terminal No. 1, circuit tester positive terminal to terminal No. 2 and the circuit tester negative terminal to terminal No. 1.

NOTE:
- Use new dry-cell batteries.
- Using circuit tester, check the voltage of a single dry-cell battery is 1.6 V or more. And also check the voltage of three batteries in series is between 4.8 V and 5.2 V.

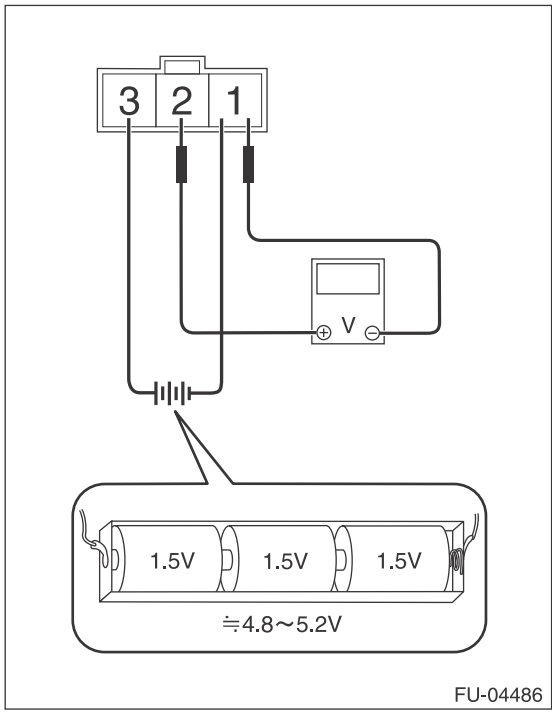

3) Check the voltage at a normal atmospheric pressure.

NOTE:
The atmospheric pressure at higher altitude is lower than normal. Therefore, the voltage is lower than the standard value.

Terminal No.	Standard
2 (+) and 1 (–)	Approx. 2.5 V (when 25°C (77°F))

4) Connect the Mighty Vac to the pressure port (A) on the fuel tank pressure sensor.

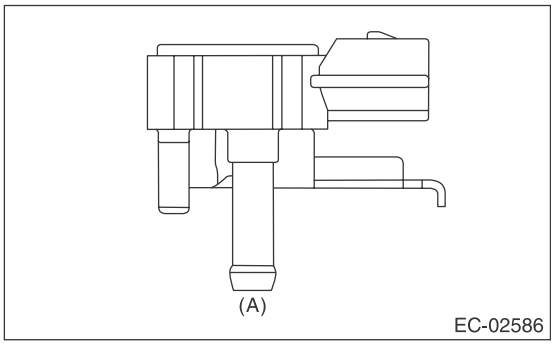

5) Check the voltage when generating vacuum and positive pressure using Mighty Vac.

CAUTION:
Be sure to apply pressure within a range of –10 — 20 kPa (–0.1 — 0.2 kgf/cm^2, –1.45 — 2.90 psi). Otherwise the fuel tank pressure sensor will be damaged.

Pressure	Terminal No.	Standard
–6.67 kPa (–0.07 kgf/cm^2, –0.97 psi)	2 (+) and 1 (–)	Approx. 0.5 V (when 25°C (77°F))
6.67 kPa (0.07 kgf/cm^2, 0.97 psi)		Approx. 4.5 V (when 25°C (77°F))

2. OTHER INSPECTIONS

Check that the hose has no cracks, damage or loose part.

11.Drain Filter

A: SPECIFICATION

Drain valve is a non-disassembled part, so do not remove the drain filter from drain valve. Refer to “Canister” for removal and installation procedures. <Ref. to EC(H4SO)-5, REMOVAL, Canister.> <Ref. to EC(H4SO)-6, INSTALLATION, Canister.>

12.Drain Valve

A: REMOVAL

Drain valve is integrated with canister. Refer to “Canister” for removal procedure. <Ref. to EC(H4SO)-5, REMOVAL, Canister.>

B: INSTALLATION

Refer to “Canister” for the installation procedure. <Ref. to EC(H4SO)-6, INSTALLATION, Canister.>

C: INSPECTION

Measure the resistance between drain valve terminals.

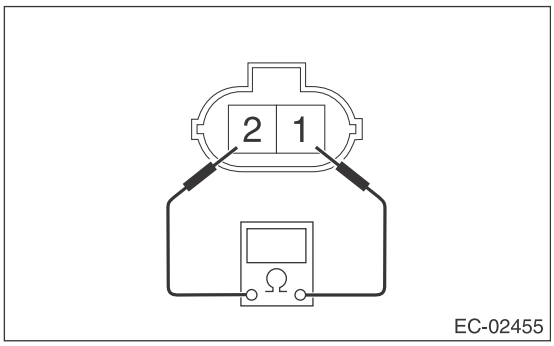

Terminal No.	Standard
1 and 2	20 — 30 Ω

13.PCV Hose Assembly

A: REMOVAL

CAUTION:
Do not remove except when the hose is broken.
1) Remove the air intake boot assembly. <Ref. to IN(H4SO)-8, REMOVAL, Air Intake Boot.>
2) Disconnect the vacuum hose (A) from PCV valve, and remove the PCV hose assembly (B) from cylinder block RH and PCV pipe.

NOTE:
Pinch the clamp of the PCV hose assembly by fitting the cut out in the ST with the protrusion on the clamp as shown in the figure, and unlock the clamp.
ST 18353AA000 CLAMP PLIERS

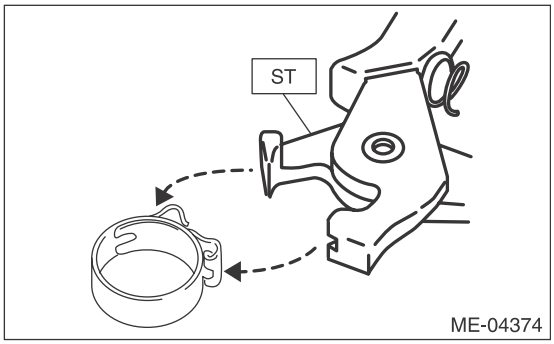

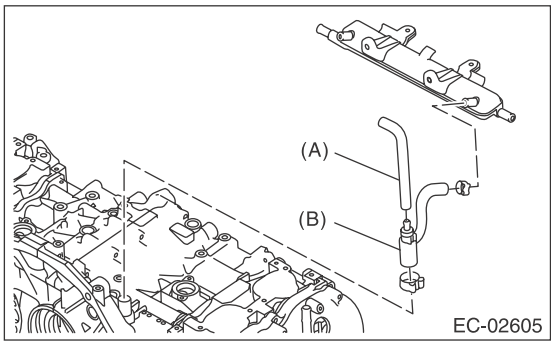

B: INSTALLATION

1) Install the PCV hose assembly (B) to the cylinder block RH and PCV pipe, and then connect the vacuum hose (A) to the PCV valve.

NOTE:
Use a new clamp for the PCV hose assembly, fit the cut out in the ST with the protrusion on the clamp as shown in the figure, and lock the clamp.
ST 18353AA000 CLAMP PLIERS

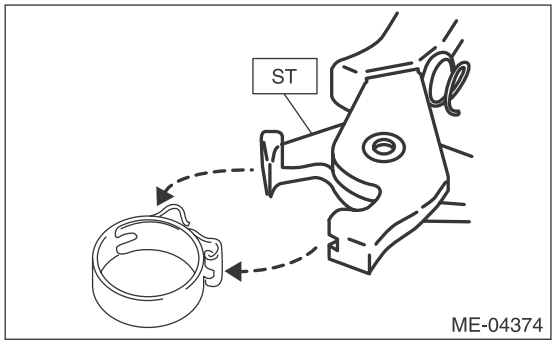

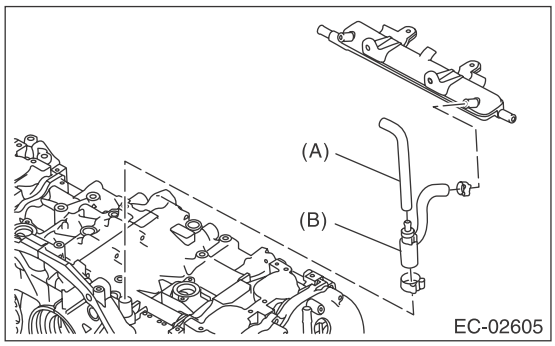

2) Install the air intake boot assembly. <Ref. to IN(H4SO)-8, INSTALLATION, Air Intake Boot.>

C: INSPECTION

Check the PCV hose assembly for cracks, damage or looseness.

14.PCV Valve

A: REMOVAL

1) Remove the air intake boot assembly. <Ref. to IN(H4SO)-8, REMOVAL, Air Intake Boot.>
2) Disconnect the vacuum hose (A) and PCV hose (B) from the PCV valve and remove the PCV valve.

NOTE:
Pinch the clamp of the PCV hose (B) by fitting the cut out in the ST with the protrusion on the clamp as shown in the figure, and unlock the clamp.
ST 18353AA000 CLAMP PLIERS

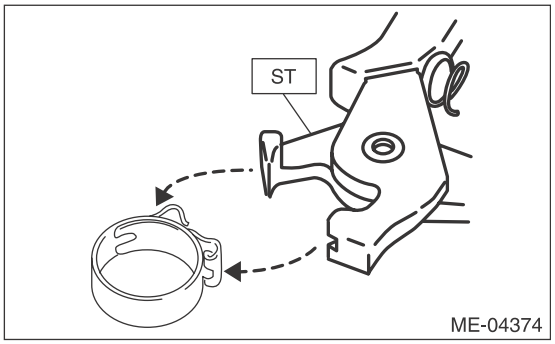

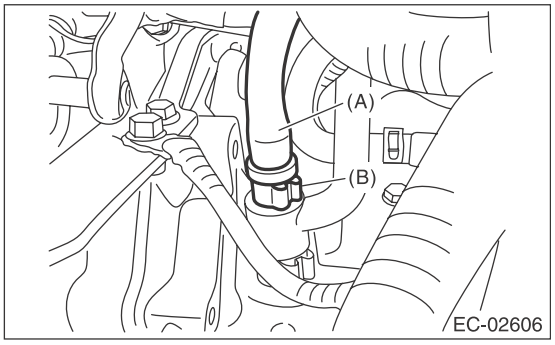

B: INSTALLATION

1) Connect the vacuum hose (A) and PCV hose (B) to the PCV valve.

NOTE:
Use a new clamp for the PCV hose (B), fit the cut out in the ST with the protrusion on the clamp as shown in the figure, and lock the clamp.
ST 18353AA000 CLAMP PLIERS

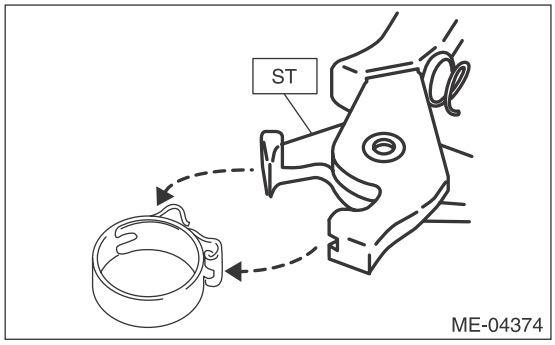

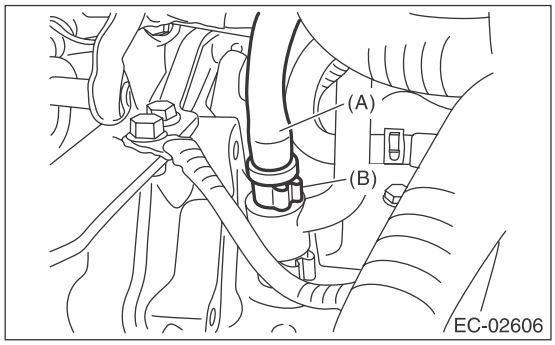

2) Install the air intake boot assembly. <Ref. to IN(H4SO)-8, INSTALLATION, Air Intake Boot.>

C: INSPECTION

1. PCV VALVE

1) Check that the PCV valve has no deformation, cracks or other damages.
2) Check that air is discharged from (B) when air is blown into (A).

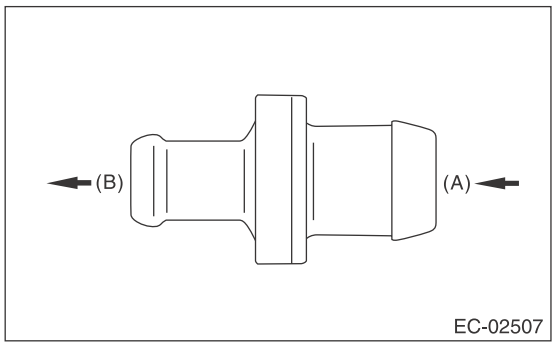

3) Check that air does not come out from (B) when air is blown into (A).

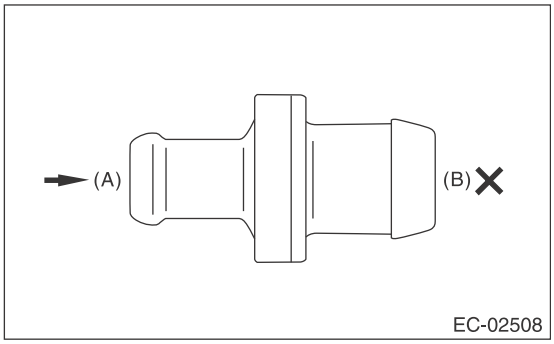

2. OTHER INSPECTIONS

Check the vacuum hose for cracks, damage or looseness.

INTAKE (INDUCTION)

IN(H4SO)

Page

1. General Description 2
2. Air Cleaner Element 4
3. Air Cleaner Case 6
4. Air Intake Boot 8
5. Air Intake Duct 9
6. Resonator Chamber 10

1. General Description

A: COMPONENT

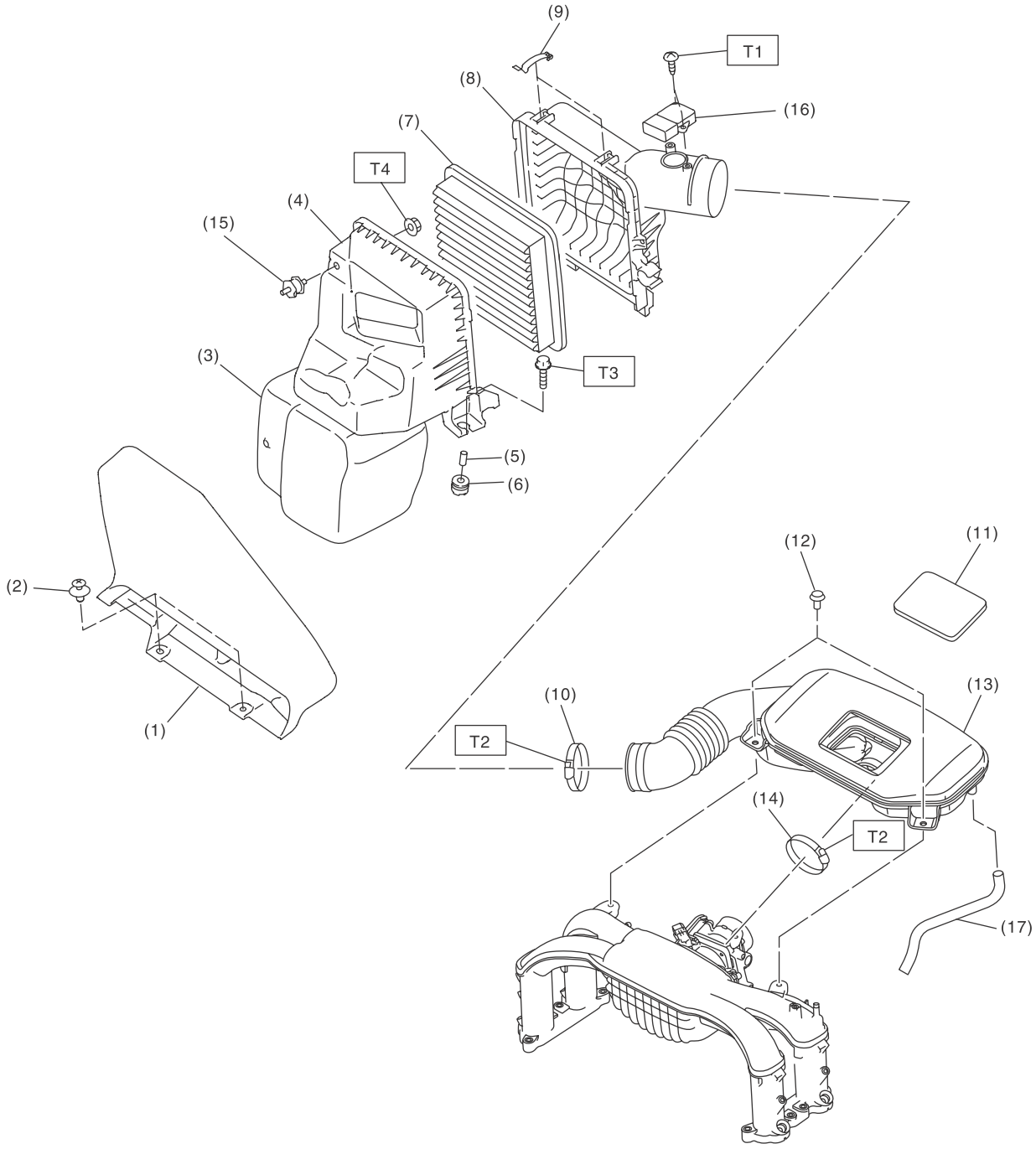

(1) Air intake duct
(2) Clip
(3) Resonator chamber
(4) Air cleaner case (front)
(5) Spacer
(6) Cushion
(7) Air cleaner element
(8) Air cleaner case (rear)
(9) Clip
(10) Clamp
(11) Cover
(12) Clip
(13) Air intake boot ASSY
(14) Clamp
(15) Cushion
(16) Mass air flow and intake air temperature sensor
(17) Blow-by hose

Tightening torque:N·m (kgf-m, ft-lb)	
T1:	*1 (0.1, 0.7)*
T2:	*3 (0.3, 2.2)*
T3:	*6 (0.6, 4.4)*
T4:	*7.5 (0.8, 5.5)*

B: CAUTION

- Wear appropriate work clothing, including a cap, protective goggles and protective shoes when performing any work.
- Remove contamination including dirt and corrosion before removal, installation or disassembly.
- Keep the disassembled parts in order and protect them from dust and dirt.
- Before removal, installation or disassembly, be sure to clarify the failure. Avoid unnecessary removal, installation, disassembly and replacement.
- Vehicle components are extremely hot after driving. Be wary of receiving burns from heated parts.
- Be sure to tighten fasteners including bolts and nuts to the specified torque.
- Place shop jacks or rigid racks at the specified points.
- Before disconnecting connectors of sensors or units, be sure to disconnect the ground cable from the battery.

2. Air Cleaner Element

A: REMOVAL

1) Disconnect the ground cable from battery.

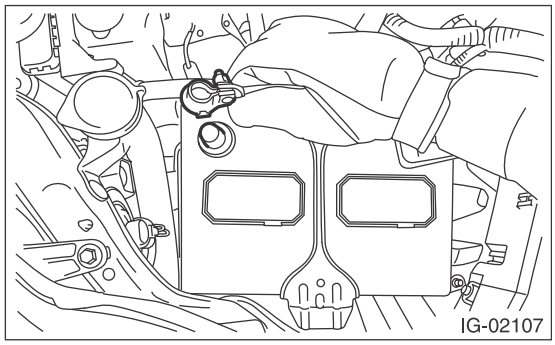

2) Disconnect the power steering oil pressure hose (suction hose) from the clip on the side of air cleaner case (rear).

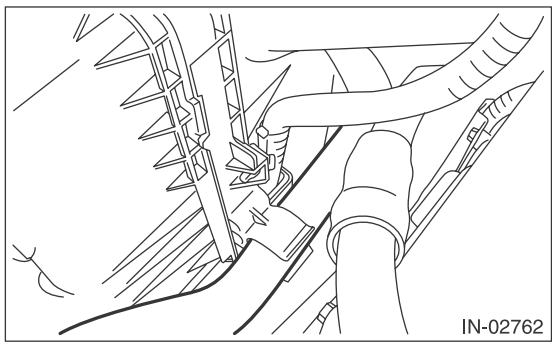

3) Disconnect the connector (A) from the mass air flow and intake air temperature sensor, and remove the clip (B).

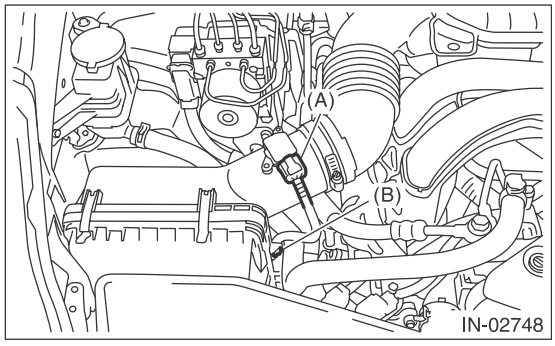

4) Loosen the clamp (A) which connects the air cleaner case (rear) and air intake boot assembly.

5) Remove the clip (B) securing the upper side of air cleaner case.

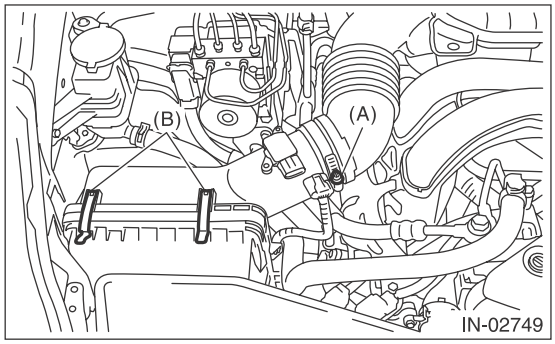

6) Pull the air cleaner case (rear) backward of the vehicle, and remove the air cleaner element.

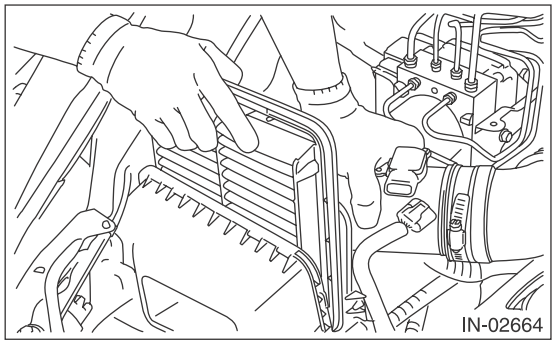

B: INSTALLATION

Install in the reverse order of removal.

CAUTION:
Be sure to use SUBARU genuine air cleaner element depending on the engine type when replacing the air cleaner elements. Using other air cleaner element may affect the engine performance.

NOTE:
- Check that there are no foreign objects in the air cleaner case.
- When installing the air cleaner case (rear), align the protrusion of the air cleaner case (rear) to the hole on the air cleaner case (front) to install.

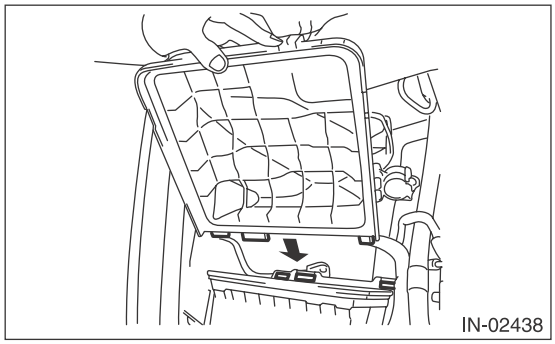

Tightening torque:
Clamp (A)
3 N·m (0.3 kgf-m, 2.2 ft-lb)

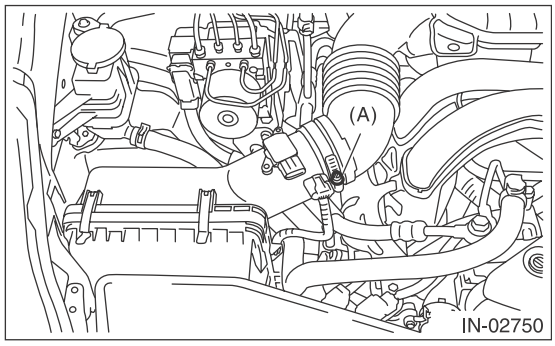

C: INSPECTION

1) Check that the air cleaner element has no deformation, cracks or other damages.
2) Check the air cleaner element for excessive dirt.

3. Air Cleaner Case

A: REMOVAL

1) Disconnect the ground cable from battery.

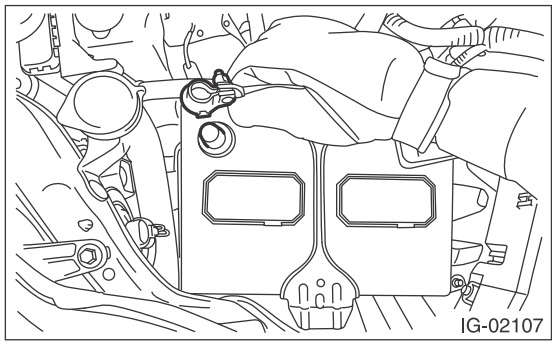

2) Remove the air intake duct. <Ref. to IN(H4SO)-9, REMOVAL, Air Intake Duct.>

3) Disconnect the power steering oil pressure hose (suction hose) from the clip on the side of air cleaner case (rear).

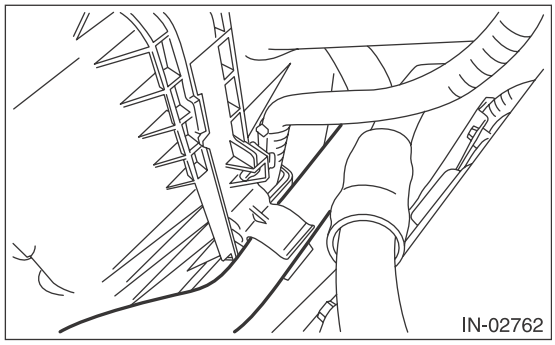

4) Disconnect the connector (A) from the mass air flow and intake air temperature sensor, and remove the clip (B).

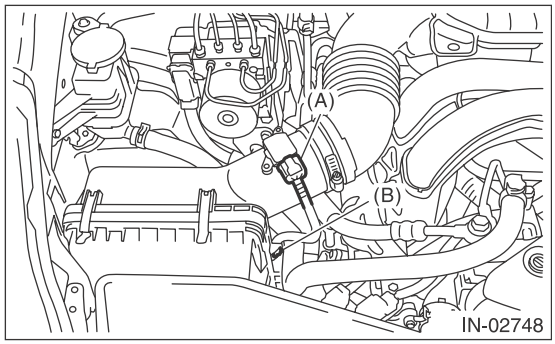

5) Loosen the clamp (A) which connects the air cleaner case and air intake boot assembly.

6) Remove the clip (B) from the air cleaner case (front).

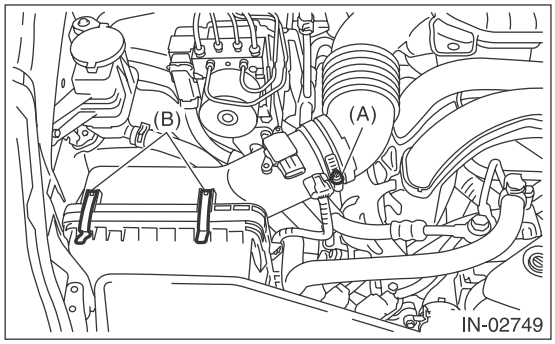

7) Remove the air cleaner case (rear) and air cleaner element.

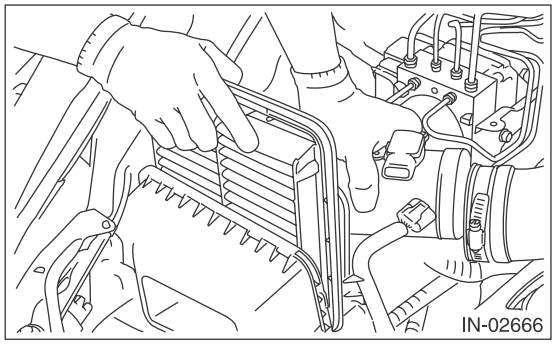

8) Remove the bolts (A) and nuts (B) which secure the air cleaner case (front) to the body.

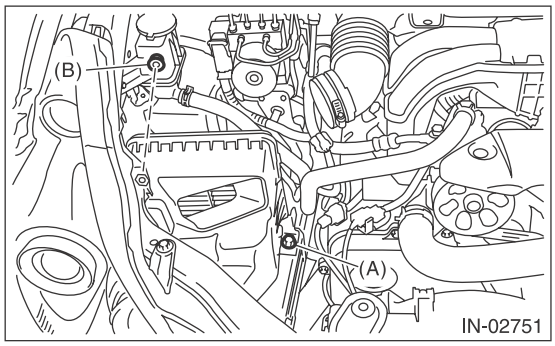

9) Remove the air cleaner case (front).

B: INSTALLATION

1) Install the bolt (A) and nut (B) which secure the air cleaner case (front) to the body.

Tightening torque:
Bolt (A)
6 N·m (0.6 kgf-m, 4.4 ft-lb)
Nut (B)
7.5 N·m (0.8 kgf-m, 5.5 ft-lb)

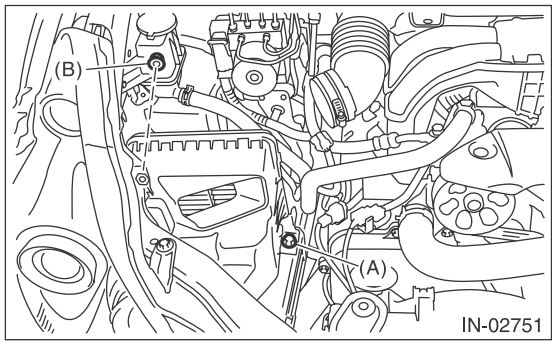

2) Install the air cleaner case (rear) and the air cleaner element.

NOTE:
When installing the air cleaner case (rear), align the protrusion of the air cleaner case (rear) to the hole on the air cleaner case (front) to install.

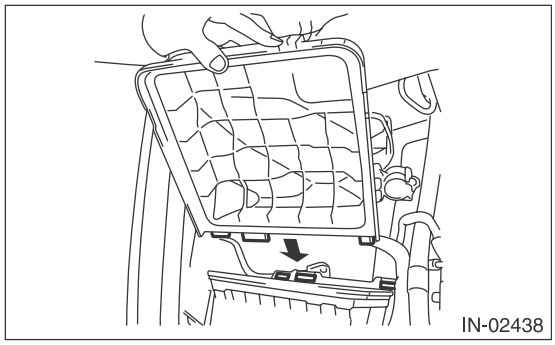

3) Install the clip (B) to the air cleaner case (front), then tighten the clamp (A) that connects the air cleaner case (rear) to the intake boot.

Tightening torque:
Clamp (A)
3 N·m (0.3 kgf-m, 2.2 ft-lb)

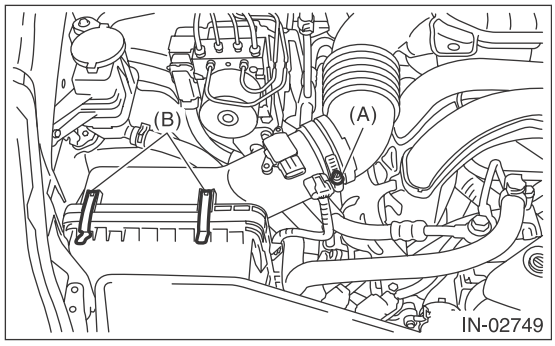

4) Connect the connector (A) to the mass air flow and intake air temperature sensor and secure the harness with clip (B).

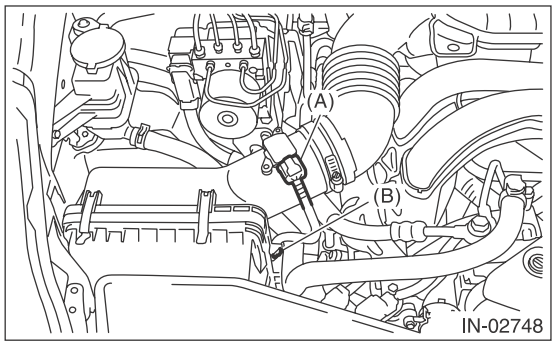

5) Connect the power steering oil pressure hose (suction hose) to the clip on the side of air cleaner case (rear).

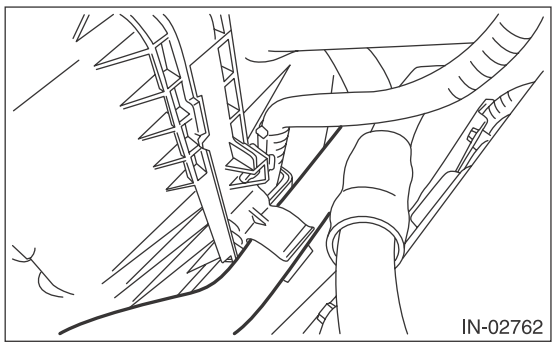

6) Install the air intake duct. <Ref. to IN(H4SO)-9, INSTALLATION, Air Intake Duct.>
7) Connect the ground cable to battery.

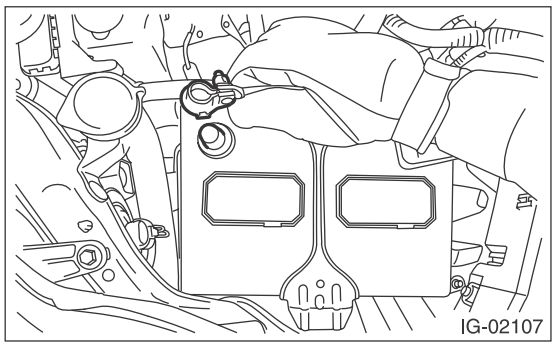

C: INSPECTION

1) Check that the air cleaner case has no deformation, cracks or other damages.
2) Check that the air intake boot has no cracks, damage or loose part.

4. Air Intake Boot

A: REMOVAL

1) Remove the cover (A) and clip (B) from air intake boot assembly.

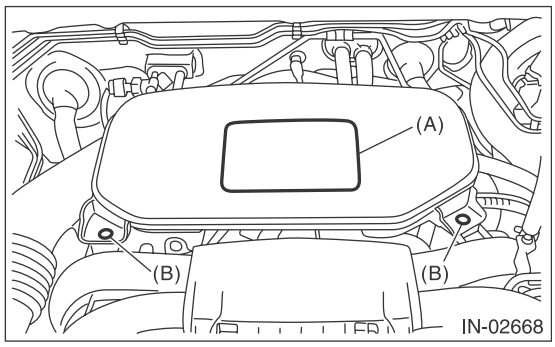

2) Loosen the clamp (A) which connects the air intake boot assembly and air cleaner case.
3) Loosen the clamp (B) which connects the air intake boot assembly and throttle body.

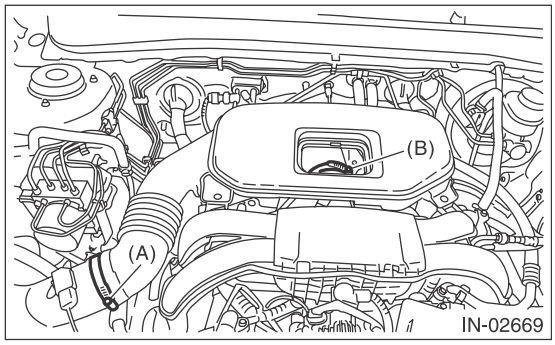

4) Disconnect the blow-by hose and remove the air intake boot assembly.

B: INSTALLATION

Install in the reverse order of removal.

Tightening torque:
Clamp (A), (B)
3 N·m (0.3 kgf-m, 2.2 ft-lb)

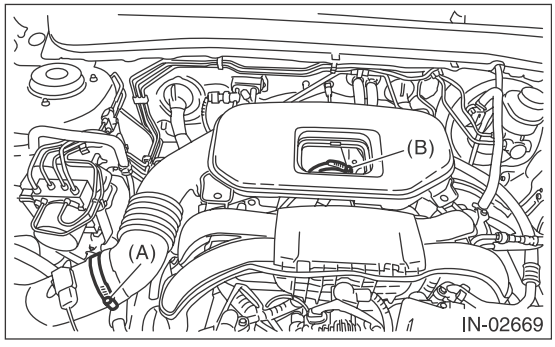

C: INSPECTION

1) Check that the air intake boot assembly does not have deformation, cracks or other damages.
2) Check there is no foreign matter in the air intake boot assembly.

5. Air Intake Duct

A: REMOVAL

1) Detach the clip connecting the air intake duct to the front vehicle body, and remove the air intake duct.

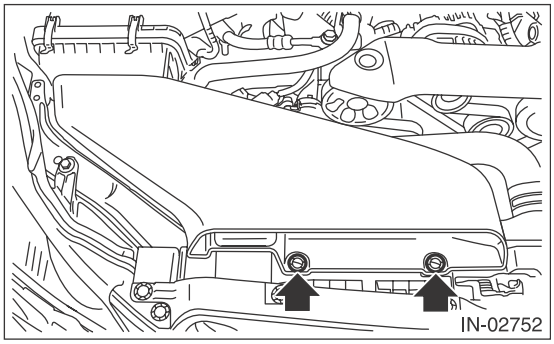

B: INSTALLATION

Install in the reverse order of removal.

C: INSPECTION

1) Check that the air intake duct has no deformation, cracks or other damages.
2) Inspect that no foreign objects are mixed in the air intake duct.

6. Resonator Chamber

A: REMOVAL

The resonator chamber and air cleaner case are integrated into one unit; therefore, refer to “Air Cleaner Case” for removal procedure. <Ref. to IN(H4SO)-6, REMOVAL, Air Cleaner Case.>

B: INSTALLATION

The resonator chamber and air cleaner case are integrated into one unit; therefore, refer to “Air Cleaner Case” for installation procedure. <Ref. to IN(H4SO)-7, INSTALLATION, Air Cleaner Case.>

C: INSPECTION

Check that the resonator chamber has no deformation, cracks or other damages.

MECHANICAL

ME(H4SO)

		Page
1.	General Description	2
2.	Compression	23
3.	Idle Speed	24
4.	Ignition Timing	25
5.	Intake Manifold Vacuum	26
6.	Engine Oil Pressure	27
7.	Fuel Pressure	28
8.	Valve Clearance	29
9.	Engine Assembly	31
10.	Engine Mounting	38
11.	Preparation for Overhaul	41
12.	V-belt	42
13.	Crank Pulley	44
14.	Timing Belt Cover	46
15.	Timing Belt	47
16.	Cam Sprocket	52
17.	Crank Sprocket	53
18.	Valve Rocker Assembly	54
19.	Camshaft	57
20.	Cylinder Head	61
21.	Cylinder Block	69
22.	Oil Switching Solenoid Valve	90
23.	Intake and Exhaust Valve	92
24.	Piston	93
25.	Connecting Rod	94
26.	Crankshaft	95
27.	Engine Trouble in General	96
28.	Engine Noise	102

1. General Description

A: SPECIFICATION

Engine	Model			2.5 L
	Cylinder arrangement			Horizontally opposed, liquid cooled, 4-cylinder, 4-stroke gasoline engine
	Valve system mechanism			Belt driven Single overhead camshaft 4 valve/cylinder
	Bore × Stroke mm (in)			99.5 × 79.0 (3.92 × 3.11)
	Displacement cm^3 (cu in)			2,457 (149.94)
	Compression ratio			10.0
	Compression pressure (at 200 — 300 rpm) kPa (kg/cm^2, psi)		Standard	1,020 — 1,275 (10.4 — 13.0, 148 — 185)
	Number of piston rings			Pressure ring: 2, Oil ring: 1
	Intake valve timing	Constant	Open	BTDC 0°
			Close	ABDC 58°
		Low speed	Open	BTDC 0°
			Close	ABDC –10°
		High speed	Open	BTDC 14°
			Close	ABDC 62°
	Exhaust valve timing		Open	BBDC 30°
			Close	ATDC14°
	Valve clearance mm (in)	Intake		0.20±0.04 (0.0079±0.0016)
		Exhaust		0.25±0.04 (0.0098±0.0016)
	Idle speed (For CVT model, select lever in “P” or “N” range. For MT model, gear shift lever in neutral position.) rpm	No load	Standard	CVT model: 675±100 MT Model: 650±100
		A/C ON	Standard	700 — 850±100
	Ignition order			1 → 3 → 2 → 4
	Ignition timing BTDC/rpm		Standard	CVT model: 15°±10°/675 MT Model: 10°±10°/650

NOTE:
US: Undersize OS: Oversize

Belt tension adjuster	Adjuster rod protrusion amount			mm (in)	5.2 — 6.2 (0.205 — 0.244)
Valve rocker arm	Clearance between arm and shaft			Standard	0.020 — 0.054 (0.0008 — 0.0021)
	Rocker arm inside diameter			Standard	22.020 — 22.041 (0.8669 — 0.8678)
	Rocker shaft diameter			Standard	21.987 — 22.000 (0.8656 — 0.8661)
Camshaft	Bending limit			mm (in)	0.025 (0.00098)
	Cam lobe height mm (in)	Intake	Constant	Standard	40.075 — 40.175 (1.5778 — 1.5817)
			Low speed	Standard	35.496 — 35.596 (1.3975 — 1.4014)
			High speed	Standard	40.315 — 40.415 (1.5872 — 1.5911)
		Exhaust		Standard	39.289 — 39.389 (1.5468 — 1.5507)
	Cam base circle diameter			Standard	34.00 (1.3386)
	Base circle step of adjacent intake cams (low speed and high speed)			Standard	0.03 (0.001)
	Oil clearance			Standard	0.055 — 0.090 (0.0022 — 0.0035)
	Journal O.D.			Standard	31.928 — 31.945 (1.2570 — 1.2577)
	Cylinder head journal inner diameter			Standard	32.000 — 32.018 (1.2598 — 1.2605)
	Thrust clearance			Standard	0.030 — 0.090 (0.0012 — 0.0035)
Cylinder head	Warping limit (Mating surface with cylinder block)			mm (in)	0.035 (0.0014)
	Grinding limit			mm (in)	0.1 (0.004)
	Standard height			mm (in)	97.5 (3.84)
Valve seat	Seating angle between valve and valve seat				90°
	Contacting width of valve and valve seat mm (in)		Intake	Standard	0.8 — 1.4 (0.03 — 0.055)
			Exhaust	Standard	1.2 — 1.8 (0.047 — 0.071)
Valve guide	Clearance between the valve guide and valve stem mm (in)		Intake	Standard	0.035 — 0.062 (0.0014 — 0.0024)
			Exhaust	Standard	0.040 — 0.067 (0.0016 — 0.0026)
	Inside diameter			mm (in)	6.000 — 6.012 (0.2362 — 0.2367)
	Valve stem outer diameter			Intake	5.950 — 5.965 (0.2343 — 0.2348)
				Exhaust	5.945 — 5.960 (0.2341 — 0.2346)
	Valve guide protrusion amount			Intake	20.0 — 21.0 (0.787 — 0.827)
				Exhaust	16.5 — 17.5 (0.650 — 0.689)
Valve	Head edge thickness mm (in)		Intake	Standard	0.8 — 1.2 (0.03 — 0.047)
			Exhaust	Standard	1.0 — 1.4 (0.039 — 0.055)
	Overall length			Intake	120.6 (4.75)
				Exhaust	121.7 (4.79)
Valve spring	Free length			mm (in)	55.2 (2.173)
	Tension/spring height			Set	235.3 — 270.7 (24 — 27.6, 52.9 — 60.8)/ 45.0 (1.772)
				Lift	578.9 — 639.9 (59.1 — 65.3, 130.3 — 143.9)/ 34.7 (1.366)
	Squareness				2.5°, 2.4 mm (0.094 in) or less
Cylinder block	Warping limit (Mating surface with cylinder head)			mm (in)	0.025 (0.00098)
	Grinding limit			mm (in)	0.1 (0.004)
	Standard height			mm (in)	201.0 (7.91)
	Taper			Standard	0.015 (0.0006)
	Out-of-roundness			Standard	0.010 (0.0004)
	Cylinder to piston clearance at 20°C (68°F):			Standard	–0.015 — 0.005 (–0.00059 — 0.00020)
	Cylinder inner diameter boring limit (diameter)			mm (in)	To 100.005 (3.9372)

Piston	Piston grade point		mm (in)	38.2 (1.504)
	Outer diameter mm (in)	Standard	A	99.510 — 99.520 (3.9177 — 3.9181)
			B	99.500 — 99.510 (3.9173 — 3.9177)
		0.25 (0.0098) OS		99.750 — 99.770 (3.9272 — 3.9280)
		0.50 (0.0197) OS		100.000 — 100.020 (3.9370 — 3.9378)
Piston pin	Degree of fit			Piston pin must be fitted into position with thumb at 20°C (68°F).
	Clearance between piston pin hole and piston pin	mm (in)	Standard	0.004 — 0.008 (0.0002 — 0.0003)
Piston ring	Piston ring gap mm (in)	Top ring	Standard	0.20 — 0.35 (0.0079 — 0.0138)
		Second ring	Standard	0.37 — 0.52 (0.0146 — 0.0205)
		Oil ring	Standard	0.20 — 0.50 (0.0079 — 0.0197)
	Clearance between piston ring and piston ring groove mm (in)	Top ring	Standard	0.040 — 0.080 (0.0016 — 0.0031)
		Second ring	Standard	0.030 — 0.070 (0.0012 — 0.0028)
Connecting rod and connecting rod bearing	Bend or twist per 100 mm (3.94 in) in length	mm (in)	Service limit	0.10 (0.0039)
	Thrust clearance	mm (in)	Standard	0.070 — 0.330 (0.0028 — 0.0130)
	Oil clearance	mm (in)	Standard	0.016 — 0.044 (0.0006 — 0.0017)
	Bearing size (Thickness at center) mm (in)	Standard		1.492 — 1.501 (0.0587 — 0.0591)
		0.03 (0.0012) US		1.510 — 1.513 (0.0594 — 0.0596)
		0.05 (0.0020) US		1.520 — 1.523 (0.0598 — 0.0600)
		0.25 (0.0098) US		1.620 — 1.623 (0.0638 — 0.0639)
Bushing of small end	Clearance between piston pin and bushing	mm (in)	Standard	0 — 0.022 (0 — 0.0009)
Crankshaft and crankshaft bearing	Bending limit		mm (in)	0.035 (0.0014)
	Crank pin	Out-of-roundness	mm (in)	0.003 (0.0001)
		Cylindricality	mm (in)	0.004 (0.0002)
		Grinding limit (dia.)	mm (in)	To 51.750 (2.0374)
	Crank journal	Out-of-roundness	mm (in)	0.005 (0.0002)
		Cylindricality	mm (in)	0.006 (0.0002)
		Grinding limit (dia.)	mm (in)	To 59.758 (2.3527)
	Crank pin outer diameter mm (in)	Standard		51.984 — 52.000 (2.0466 — 2.0472)
		0.03 (0.0012) US		51.954 — 51.970 (2.0454 — 2.0461)
		0.05 (0.0020) US		51.934 — 51.950 (2.0446 — 2.0453)
		0.25 (0.0098) US		51.734 — 51.750 (2.0368 — 2.0374)
	Crank journal outer diameter mm (in)	Standard		59.992 — 60.008 (2.3619 — 2.3625)
		0.03 (0.0012) US		59.962 — 59.978 (2.3607 — 2.3613)
		0.05 (0.0020) US		59.942 — 59.958 (2.3599 — 2.3605)
		0.25 (0.0098) US		59.742 — 59.758 (2.3520 — 2.3527)
	Bearing size (Thickness at center) mm (in)	#1, #3 Standard		1.998 — 2.011 (0.0787 — 0.0792)
		#1, #3 0.03 (0.0012) US		2.017 — 2.020 (0.0794 — 0.0795)
		#1, #3 0.05 (0.0020) US		2.027 — 2.030 (0.0798 — 0.0799)
		#1, #3 0.25 (0.0098) US		2.127 — 2.130 (0.0837 — 0.0839)
		#2, #4, #5 Standard		2.000 — 2.013 (0.0787 — 0.0793)
		#2, #4, #5 0.03 (0.0012) US		2.019 — 2.022 (0.0795 — 0.0796)
		#2, #4, #5 0.05 (0.0020) US		2.029 — 2.032 (0.0799 — 0.0800)
		#2, #4, #5 0.25 (0.0098) US		2.129 — 2.132 (0.0838 — 0.0839)
	Thrust clearance	mm (in)	Standard	0.030 — 0.115 (0.0012 — 0.0045)
	Oil clearance	mm (in)	Standard	0.010 — 0.030 (0.0004 — 0.0012)

B: COMPONENT

1. V-BELT

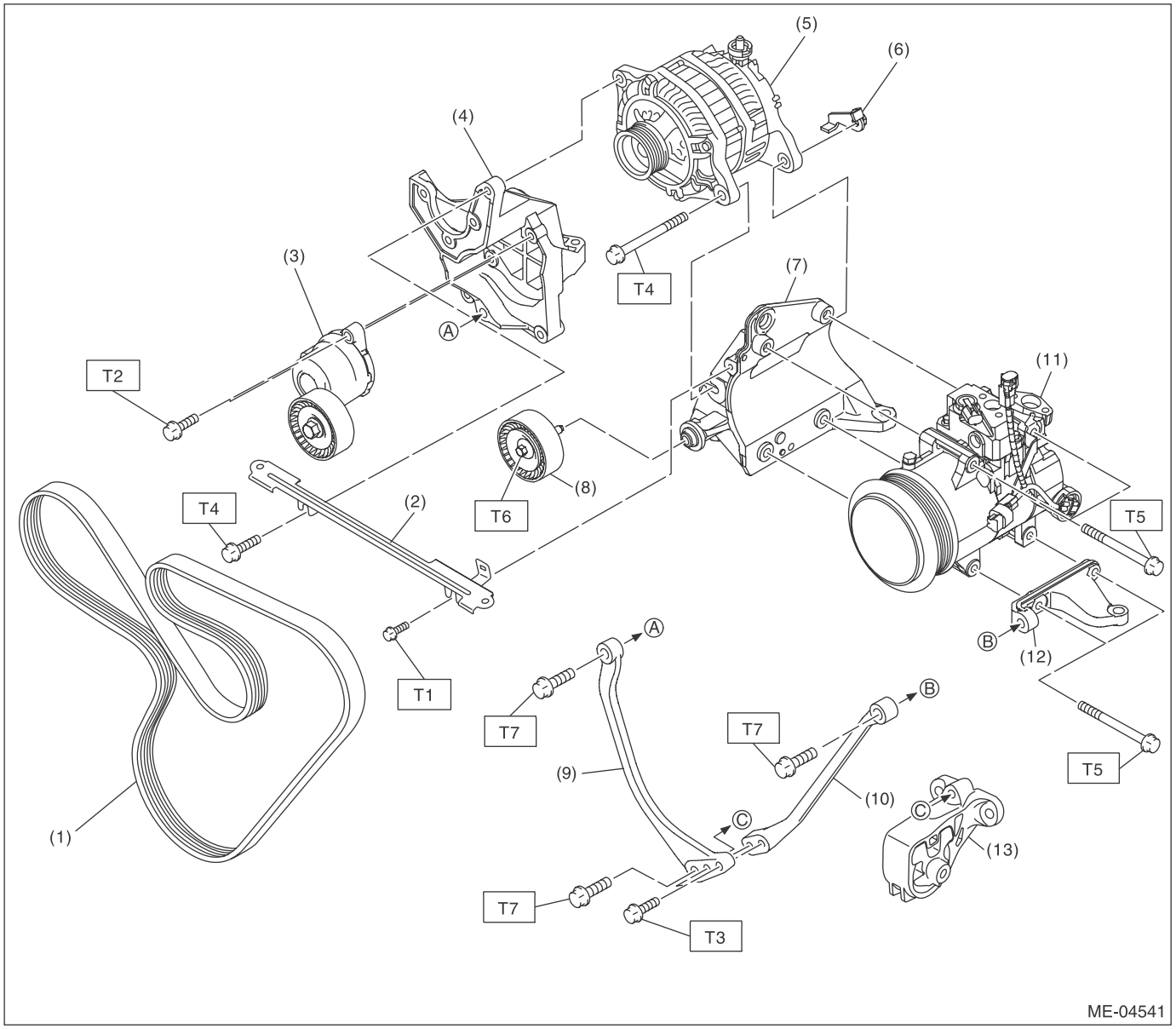

(1)	V-belt	(8)	Idler pulley ASSY
(2)	V-belt cover bracket	(9)	Stopper rod RH
(3)	V-belt tensioner ASSY	(10)	Stopper rod LH
(4)	Power steering pump bracket	(11)	A/C compressor
(5)	Generator	(12)	A/C compressor bracket B
(6)	Generator plate	(13)	Front cushion rubber
(7)	A/C compressor bracket A		

Tightening torque:N·m (kgf-m, ft-lb)

T1: 6.4 (0.7, 4.7)
T2: 20 (2.0, 14.8)
T3: 22 (2.2, 16.2)
T4: 25 (2.5, 18.4)
T5: 26.5 (2.7, 19.5)
T6: 33 (3.4, 24.3)
T7: 36 (3.7, 26.6)

2. TIMING BELT

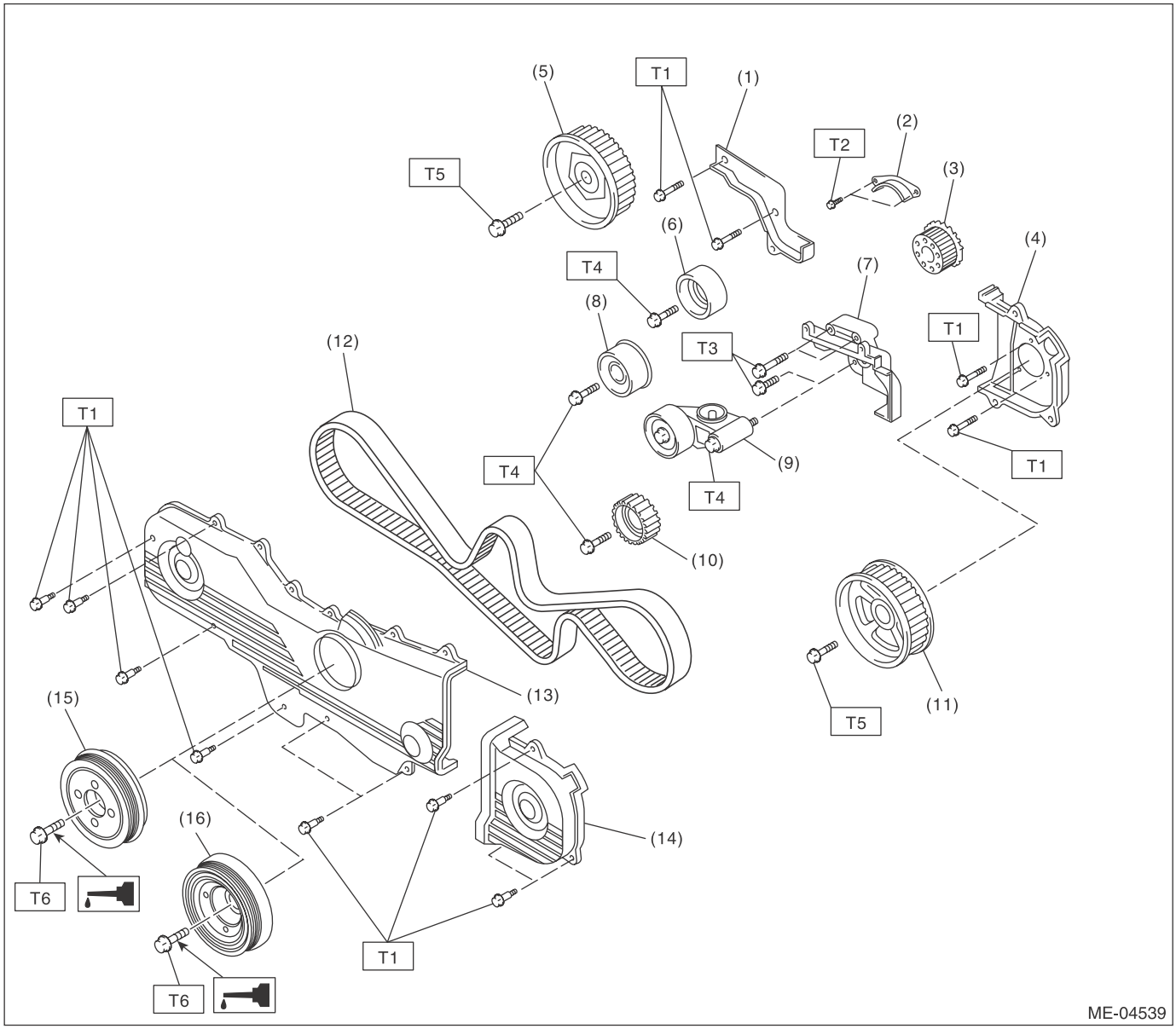

(1)	Timing belt cover No. 2 RH	(9)	Automatic belt tension adjuster ASSY
(2)	Timing belt guide (MT model)	(10)	Belt idler No. 2
(3)	Crank sprocket	(11)	Cam sprocket No. 2
(4)	Timing belt cover No. 2 LH	(12)	Timing belt
(5)	Cam sprocket No. 1	(13)	Front timing belt cover
(6)	Belt idler (A)	(14)	Timing belt cover LH
(7)	Tensioner bracket	(15)	Crank pulley (MT model)
(8)	Belt idler (B)	(16)	Crank pulley (CVT model)

Tightening torque:N·m (kgf-m, ft-lb)

T1: 5 (0.5, 3.7)
T2: 9.75 (1.0, 7.2)
T3: 24.5 (2.5, 18.1)
T4: 39 (4.0, 28.8)
T5: 78 (8.0, 57.5)
T6: <Ref. to ME(H4SO)-44, INSTALLATION, Crank Pulley.>

3. CYLINDER HEAD AND CAMSHAFT

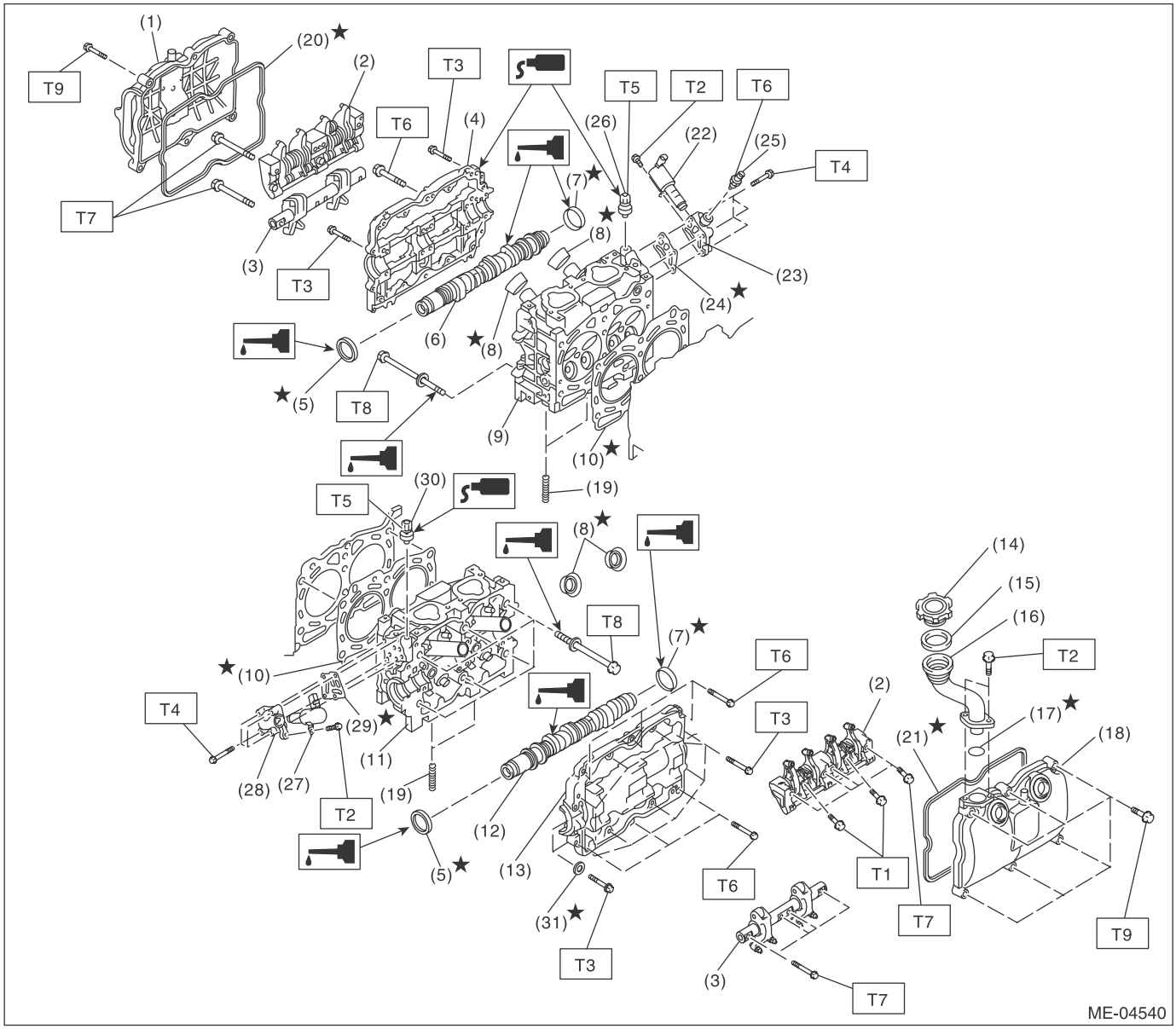

(1) Rocker cover RH
(2) Intake valve rocker ASSY
(3) Exhaust valve rocker ASSY
(4) Camshaft cap RH
(5) Oil seal
(6) Camshaft RH
(7) PLUG
(8) Spark plug pipe gasket
(9) Cylinder head RH
(10) Cylinder head gasket
(11) Cylinder head LH
(12) Camshaft LH
(13) Camshaft cap LH
(14) Oil filler cap
(15) Gasket
(16) Oil filler duct
(17) O-ring
(18) Rocker cover LH
(19) Stud bolt
(20) Rocker cover gasket RH
(21) Rocker cover gasket LH
(22) Oil switching solenoid valve RH
(23) Oil switching solenoid valve holder RH
(24) Gasket
(25) Oil temperature sensor
(26) Variable valve lift diagnosis oil pressure switch RH
(27) Oil switching solenoid valve LH
(28) Oil switching solenoid valve holder LH
(29) Gasket
(30) Variable valve lift diagnosis oil pressure switch LH
(31) Seal washer

Tightening torque:N·m (kgf-m, ft-lb)

T1: 6 (0.6, 4.4)
T2: 6.4 (0.7, 4.7)
T3: 9.75 (1.0, 7.2)
T4: 10 (1.0, 7.4)
T5: 17 (1.7, 12.5)
T6: 18 (1.8, 13.3)
T7: 25 (2.5, 18.4)
T8: <Ref. to ME(H4SO)-61, INSTALLATION, Cylinder Head.>
T9: <Ref. to ME(H4SO)-54, INSTALLATION, Valve Rocker Assembly.>

4. VALVE ROCKER ASSY

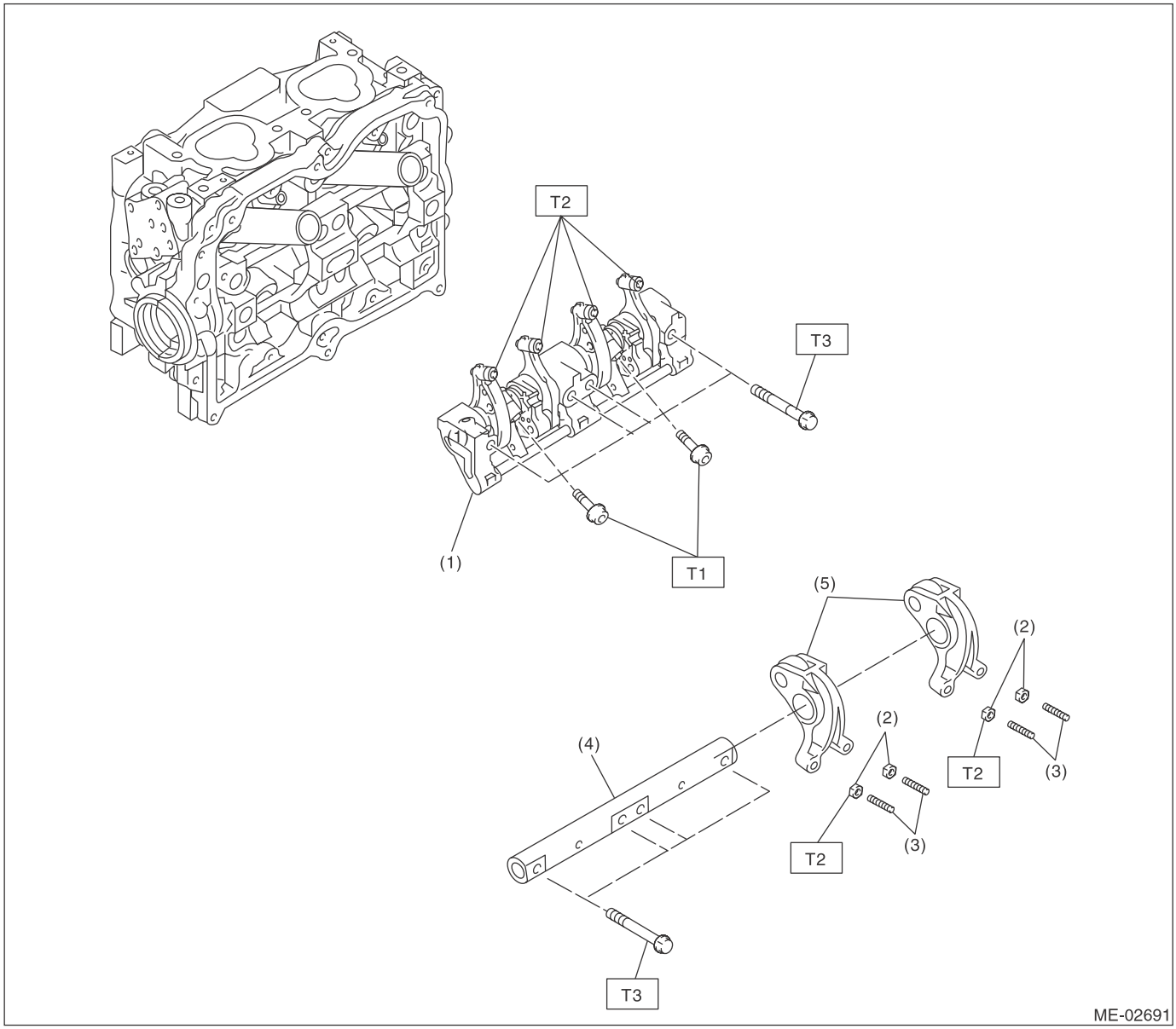

(1) Intake valve rocker ASSY
(2) Valve rocker nut
(3) Valve rocker adjusting screw
(4) Exhaust rocker shaft
(5) Exhaust valve rocker arm

Tightening torque:N·m (kgf-m, ft-lb)
T1: 6 (0.6, 4.4)
T2: 9.75 (1.0, 7.2)
T3: 25 (2.5, 18.4)

5. CYLINDER HEAD AND VALVE ASSEMBLY

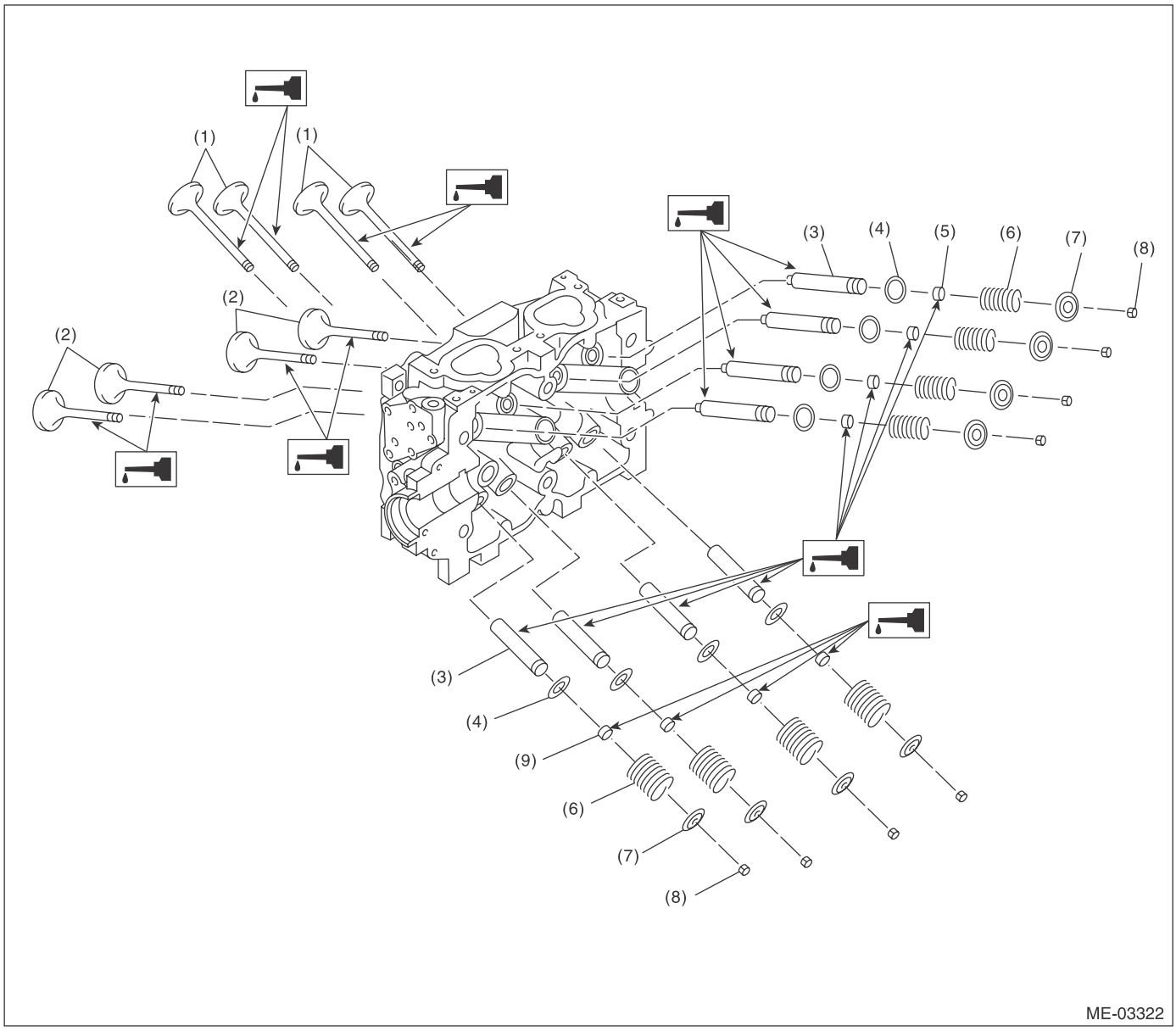

(1) Exhaust valve
(2) Intake valve
(3) Valve guide
(4) Valve spring seat
(5) Intake valve oil seal
(6) Valve spring
(7) Retainer
(8) Retainer key
(9) Exhaust valve oil seal

6. CYLINDER BLOCK

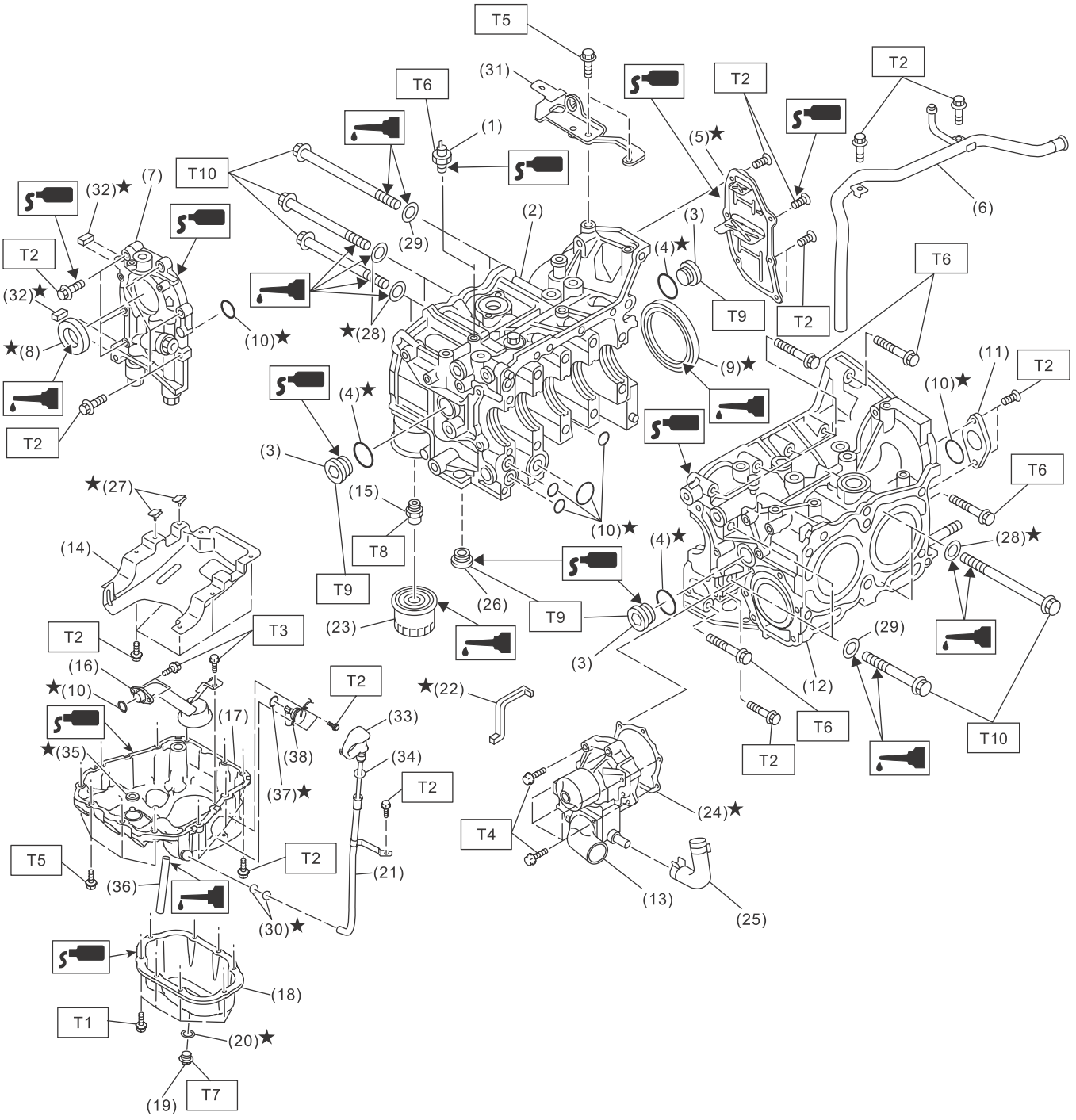

ME-04434

(1) Oil pressure switch
(2) Cylinder block RH
(3) Service hole plug
(4) Gasket
(5) Oil separator cover
(6) Water by-pass pipe
(7) Oil pump
(8) Front oil seal
(9) Rear oil seal
(10) O-ring
(11) Service hole cover
(12) Cylinder block LH
(13) Water pump
(14) Baffle plate
(15) Oil filter connector
(16) Oil strainer
(17) Cylinder block lower
(18) Oil pan
(19) Drain plug
(20) Drain plug gasket
(21) Oil level gauge guide
(22) Water pump sealing
(23) Oil filter
(24) Gasket
(25) Water pump hose
(26) PLUG
(27) Seal
(28) Seal washer
(29) Washer
(30) O-ring
(31) Engine rear hanger
(32) Oil pump seal
(33) Oil level gauge
(34) O-ring
(35) O-ring
(36) Oil drain pipe
(37) O-ring
(38) Oil level switch

Tightening torque:N·m (kgf-m, ft-lb)

T1:	***5 (0.5, 3.7)***
T2:	***6.4 (0.7, 4.7)***
T3:	***10 (1.0, 7.4)***
T4:	***First 12 (1.2, 8.7) Second 12 (1.2, 8.7)***
T5:	***16 (1.6, 11.8)***
T6:	***25 (2.5, 18.4)***
T7:	***41.7 (4.3, 30.8)***
T8:	***45 (4.6, 33.2)***
T9:	***70 (7.1, 51.6)***
T10:	***<Ref. to ME(H4SO)-73, INSTALLATION, Cylinder Block.>***

7. CRANKSHAFT AND PISTON

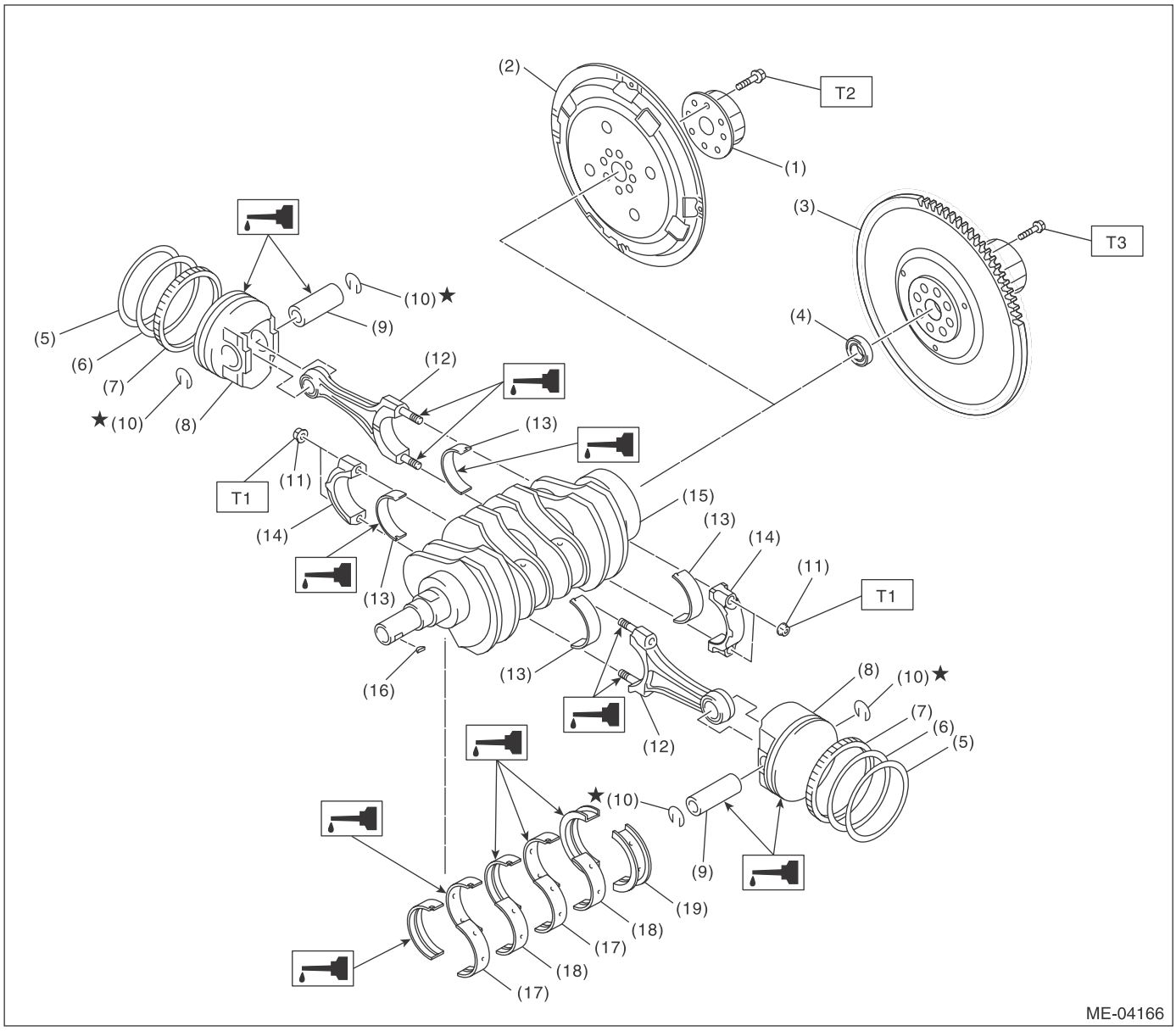

(1) Reinforcement (CVT model)
(2) Drive plate (CVT model)
(3) Flywheel (MT model)
(4) Ball bearing (MT model)
(5) Top ring
(6) Second ring
(7) Oil ring
(8) Piston
(9) Piston pin
(10) Snap ring
(11) Connecting rod nut
(12) Connecting rod
(13) Connecting rod bearing
(14) Connecting rod cap
(15) Crankshaft
(16) Woodruff key
(17) Crankshaft bearing #1, #3
(18) Crankshaft bearing #2, #4
(19) Crankshaft bearing #5

Tightening torque:N·m (kgf-m, ft-lb)
T1: 45 (4.6, 33.2)
T2: <Ref. to CVT-135, INSTALLATION, Drive Plate.>
T3: <Ref. to CL-14, INSTALLATION, Flywheel.>

8. ENGINE MOUNTING

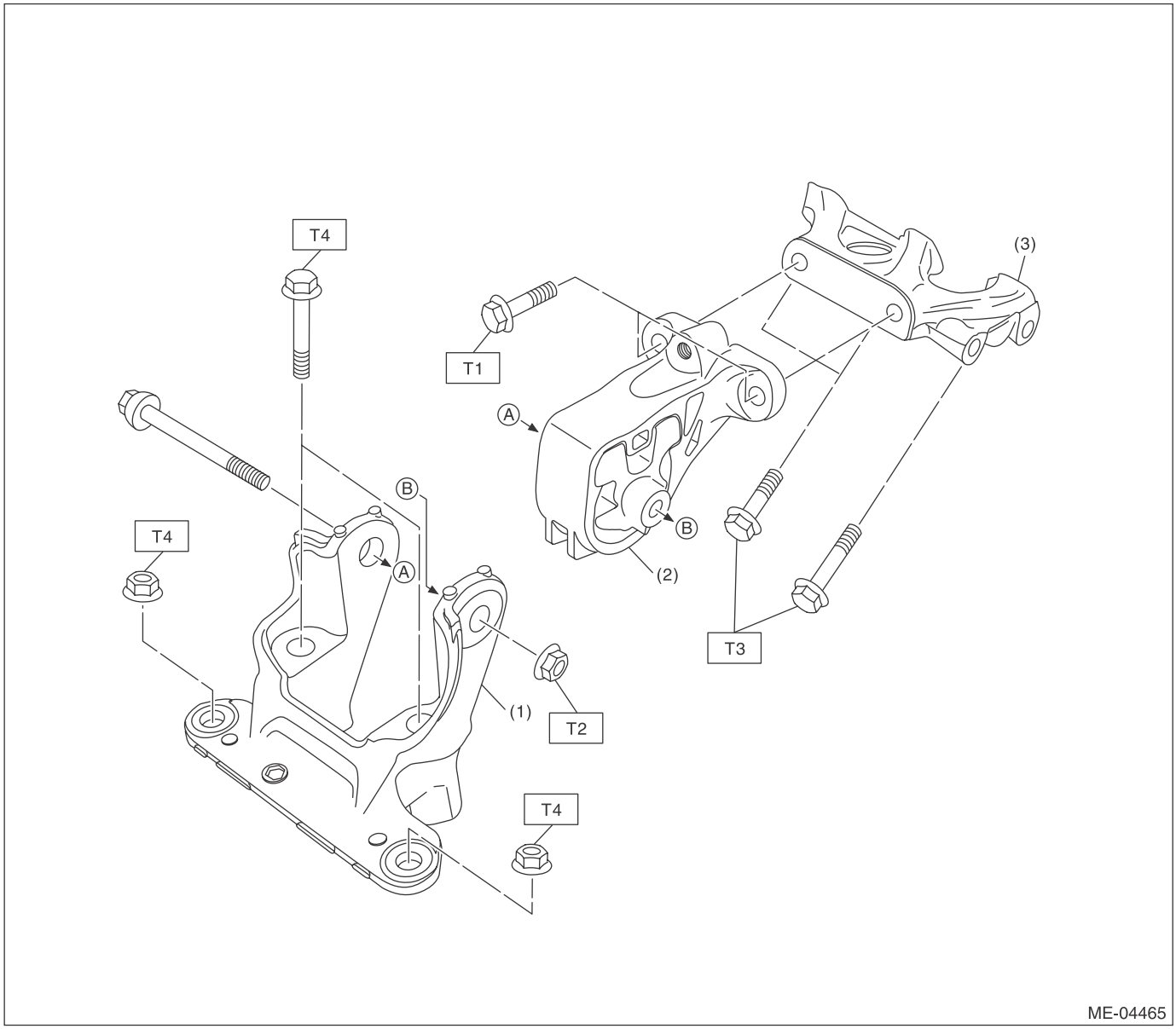

(1) Front mounting bracket
(2) Front cushion rubber
(3) Engine mounting bracket

Tightening torque:N·m (kgf-m, ft-lb)
T1: 25 (2.5, 18.4)
T2: 45 (4.6, 33.2)
T3: 58 (5.9, 42.8)
T4: 60 (6.1, 44.3)

C: CAUTION

• Wear appropriate work clothing, including a cap, protective goggles and protective shoes when performing any work.
• Remove contamination including dirt and corrosion before removal, installation or disassembly.
• Keep the disassembled parts in order and protect them from dust and dirt.
• Before removal, installation or disassembly, be sure to clarify the failure. Avoid unnecessary removal, installation, disassembly and replacement.
• Vehicle components are extremely hot after driving. Be wary of receiving burns from heated parts.
• Be sure to tighten fasteners including bolts and nuts to the specified torque.
• Place shop jacks or rigid racks at the specified points.
• Before disconnecting connectors of sensors or units, be sure to disconnect the ground cable from the battery.
• All parts should be thoroughly cleaned, paying special attention to engine oil passages, pistons and bearings.
• Rotating parts and sliding parts such as piston, bearing and gear should be coated with oil prior to assembly.
• Be careful not to let oil, grease or coolant contact the timing belt, clutch disc and flywheel.
• All removed parts, if to be reused, should be reinstalled in the original positions and directions.
• Bolts, nuts and washers should be replaced with new parts as required.
• Even if necessary inspections have been made in advance, proceed with assembly work while making rechecks.
• Remove or install the engine in an area where chain hoists, lifting devices, etc. are available for ready use.
• Be sure not to damage coated surfaces of body panels with tools, or not to stain seats and windows with coolant or oil. Place a cover over fender, as required, for protection.
• Prior to starting work, prepare the following:
Service tools, clean cloth, containers to catch coolant and oil, wire ropes, chain hoist, transmission jacks, etc.
• Lift up or lower the vehicle when necessary. Make sure to support the correct positions.

D: PREPARATION TOOL

1. SPECIAL TOOL

ILLUSTRATION	TOOL NUMBER	DESCRIPTION	REMARKS
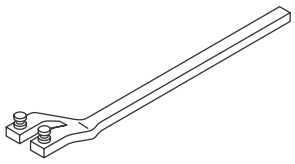 ST18231AA010	18231AA010	CAM SPROCKET WRENCH	Used for removing and installing cam sprocket. (LH side) NOTE: CAM SPROCKET WRENCH (499207100) can also be used.
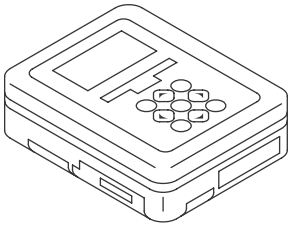 ST1B022XU0	1B022XU0	SUBARU SELECT MONITOR III KIT	Used for each inspection.

ILLUSTRATION	TOOL NUMBER	DESCRIPTION	REMARKS
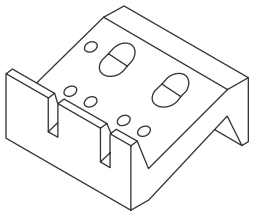 ST-498267800	498267800	CYLINDER HEAD TABLE	• Used for replacing valve guides. • Used for removing and installing valve spring.
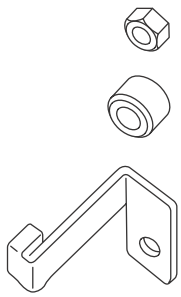 ST-498277200	498277200	STOPPER SET	Used for installing automatic transmission assembly to engine.
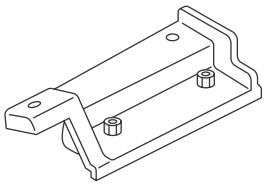 ST-498457000	498457000	ENGINE STAND ADAPTER RH	Used together with ENGINE STAND (499817100).
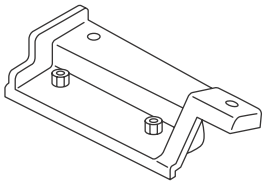 ST-498457100	498457100	ENGINE STAND ADAPTER LH	Used together with ENGINE STAND (499817100).
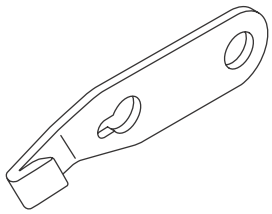 ST-498497100	498497100	CRANKSHAFT STOPPER	Used for removing and installing drive plate.

ILLUSTRATION	TOOL NUMBER	DESCRIPTION	REMARKS
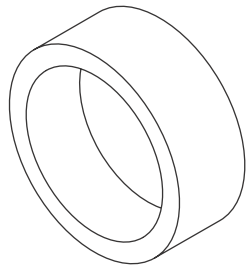 ST-498747300	498747300	PISTON GUIDE	Used for installing piston in cylinder.
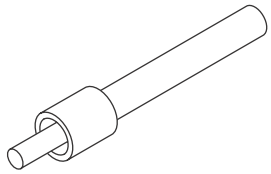 ST-498857100	498857100	VALVE OIL SEAL GUIDE	Used for press-fitting of intake and exhaust valve guide oil seals.
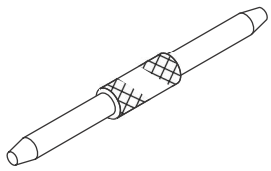 ST-499017100	499017100	PISTON PIN GUIDE	Used for installing piston pin, piston and connecting rod.
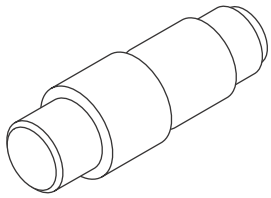 ST-499037100	499037100	CONNECTING ROD BUSHING REMOVER AND INSTALLER	Used for removing and installing connecting rod bushing.
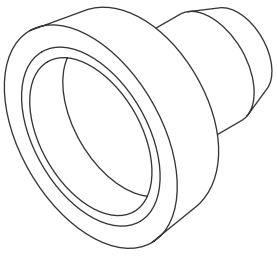 ST-499587200	499587200	CRANKSHAFT OIL SEAL INSTALLER	• Used for installing crankshaft oil seal. • Used together with CRANKSHAFT OIL SEAL GUIDE (499597100).

ILLUSTRATION	TOOL NUMBER	DESCRIPTION	REMARKS
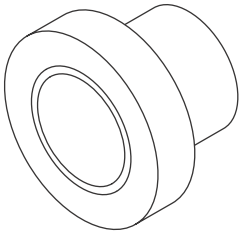 ST-499587500	499587500	OIL SEAL INSTALLER	• Used for installing the camshaft oil seal. • Used together with OIL SEAL GUIDE (499597000).
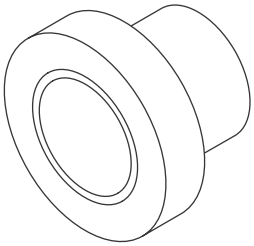 ST-499587700	499587700	CAMSHAFT OIL SEAL INSTALLER	Used for installing cylinder head plug.
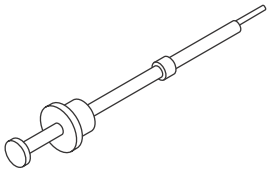 ST-499097700	499097700	PISTON PIN REMOVER ASSY	Used for removing piston pin.
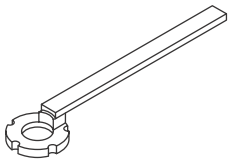 ST-499207400	499207400	CAM SPROCKET WRENCH	Used for removing and installing cam sprocket. (RH side)
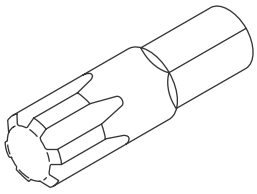 ST-499497000	499497000	TORX® PLUS	Used for removing and installing camshaft cap.

ILLUSTRATION	TOOL NUMBER	DESCRIPTION	REMARKS
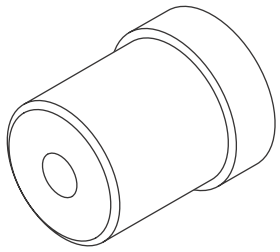 ST-499587100	499587100	OIL SEAL INSTALLER	Used for installing oil pump oil seal.
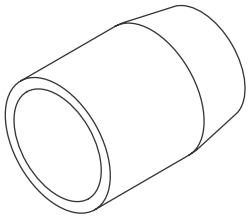 ST-499597000	499597000	OIL SEAL GUIDE	• Used for installing the camshaft oil seal. • Used together with CAMSHAFT OIL SEAL INSTALLER (499587500).
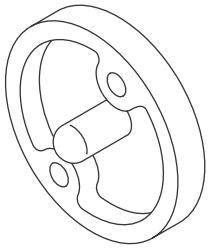 ST-499597100	499597100	CRANKSHAFT OIL SEAL GUIDE	• Used for installing crankshaft oil seal. • Used together with CRANKSHAFT OIL SEAL INSTALLER (499587200).
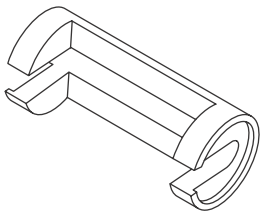 ST-499718000	499718000	VALVE SPRING REMOVER	Used for removing and installing valve spring.
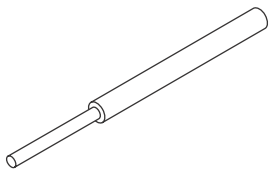 ST-499767200	499767200	VALVE GUIDE REMOVER	Used for removing valve guides.

ILLUSTRATION	TOOL NUMBER	DESCRIPTION	REMARKS
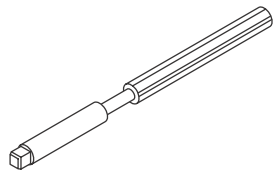 ST-499767400	499767400	VALVE GUIDE REAMER	Used for reaming valve guides.
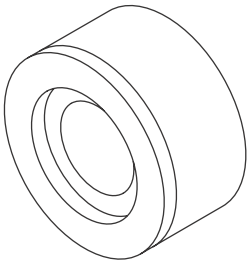 ST-499767700	499767700	VALVE GUIDE ADJUSTER	Used for installing valve guides. (Intake side)
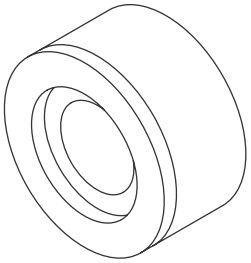 ST-499767800	499767800	VALVE GUIDE ADJUSTER	Used for installing valve guides. (Exhaust side)
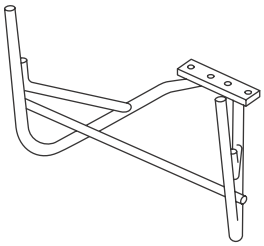 ST-499817100	499817100	ENGINE STAND	• Stand used for engine disassembly and assembly. • Used together with ENGINE STAND ADAPTER RH (498457000) & LH (498457100).
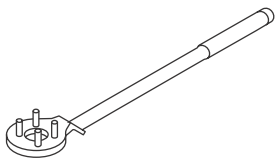 ST-499977100	499977100	CRANK PULLEY WRENCH	Used for removing and installing the crank pulley. (MT model)

ILLUSTRATION	TOOL NUMBER	DESCRIPTION	REMARKS
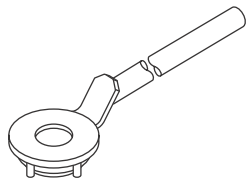 ST-499977400	499977400	CRANK PULLEY WRENCH	Used for removing and installing the crank pulley. (CVT model)
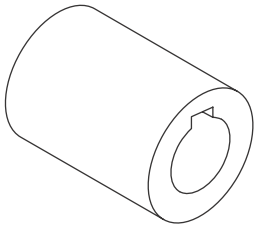 ST-499987500	499987500	CRANKSHAFT SOCKET	Used for rotating crankshaft.
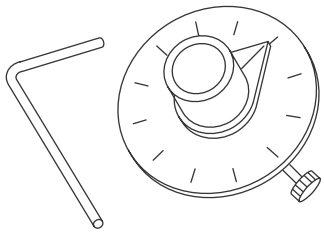 ST18854AA000	18854AA000	ANGLE GAUGE	Used for installing the crank pulley.
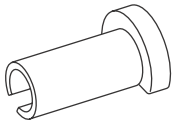 ST42099AE000	42099AE000	QUICK CONNECTOR RELEASE	Used for disconnecting quick connector of the engine compartment.
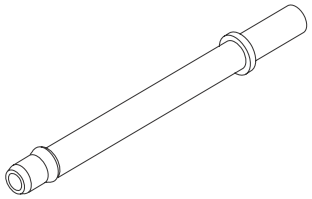 ST18471AA000	18471AA000	FUEL PIPE ADAPTER	Used for inspecting the fuel pressure.

ILLUSTRATION	TOOL NUMBER	DESCRIPTION	REMARKS
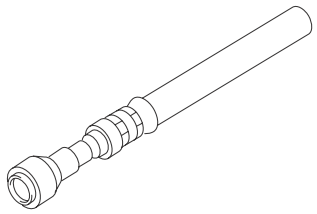 ST42075AG690	42075AG690	FUEL HOSE	Used for inspecting the fuel pressure. NOTE: This is the SUBARU genuine part.
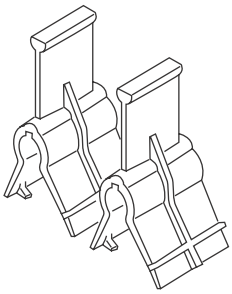 ST18354AA000	18354AA000	VALVE ROCKER HOLDER	Used for installing the valve rocker assembly (intake). (2-piece set)
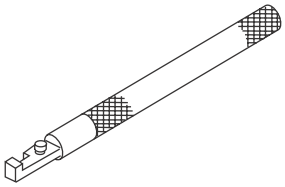 ST18258AA000	18258AA000	SPRING INSTALLER	Used for installing the valve rocker assembly (intake).

2. GENERAL TOOL

TOOL NAME	REMARKS
Compression gauge	Used for measuring compression.
Vacuum gauge	Used for measuring intake manifold vacuum.
Oil pressure gauge	Used for measuring engine oil pressure.
Fuel pressure gauge	Used for measuring fuel pressure.
Timing light	Used for measuring ignition timing.

2. Compression

A: INSPECTION

CAUTION:
After warming-up, engine becomes very hot. Be careful not to burn yourself during measurement.

1) After warming-up the engine, turn the ignition switch to OFF.
2) Make sure that the battery is fully charged.
3) Remove the fuse of fuel pump from main fuse box.

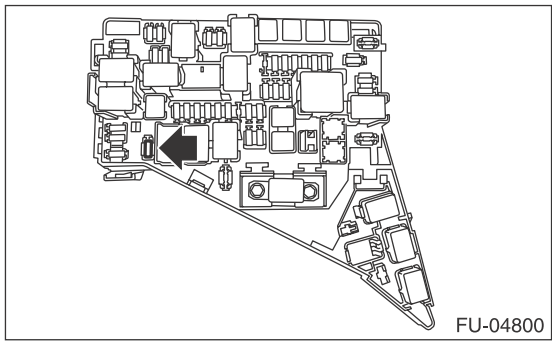

4) Start the engine and run it until it stalls.
5) After the engine stalls, crank it for five more seconds.
6) Turn the ignition switch to OFF.
7) Remove all spark plugs. <Ref. to IG(H4SO)-3, REMOVAL, Spark Plug.>
8) Fully open the throttle valve.
9) Check the starter motor for satisfactory performance and operation.
10) Install the compression gauge to the spark plug hole.

NOTE:
When using a screw-in type compression gauge, the screw should be less than 18 mm (0.71 in) long.

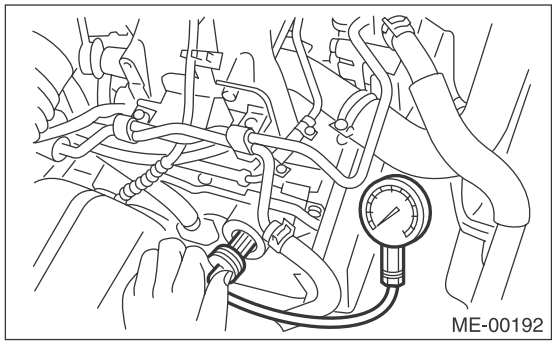

11) Crank the engine by starter motor and read the value when the needle of the compression gauge becomes stable.

NOTE:
• Perform at least two measurements per cylinder, and make sure that the values are correct.
• If the compression pressure is out of standard, check or adjust the pistons, valves and cylinders.

Compression (fully open throttle):
Standard
1,020 — 1,275 kPa (10.4 — 13.0 kgf/cm^2, 148 — 185 psi)
Difference between cylinders
49 kPa (0.5 kgf/cm^2, 7 psi) or less

12) After inspection, install the related parts in the reverse order of removal.

3. Idle Speed

A: INSPECTION

1) Before checking the idle speed, check the following item:
   (1) Check the air cleaner element is free from clogging, ignition timing is correct, spark plugs are in good condition, and hoses are connected properly.
   (2) Check the malfunction indicator light does not illuminate.
2) Warm up the engine.
3) Read the engine idle speed using Subaru Select Monitor. <Ref. to EN(H4SO)(diag)-34, READ CURRENT DATA FOR ENGINE (NORMAL MODE), OPERATION, Subaru Select Monitor.>

NOTE:
• Idle speed cannot be adjusted manually, because the idle speed is automatically adjusted.
• If idle speed is out of standard, refer to the General Diagnosis Table under “Engine Control System”. <Ref. to EN(H4SO)(diag)-2, Basic Diagnostic Procedure.>

(1) Check the idle speed when no-loaded. (Headlight, heater fan, rear defroster, radiator fan, A/C and etc. are OFF)

Idle speed (No load, and for CVT model, select lever in “P” or “N” range, for MT model, gear shift lever in neutral position.):
Standard
675±100 rpm (CVT model)
650±100 rpm (MT model)

(2) Check the idle speed when loaded. (Turn the A/C switch to “ON” and operate the compressor for at least one minute before measurement.)

Idle speed (A/C on, and for CVT model, select lever in “P” or “N” range, for MT model, gear shift lever in neutral position.):
Standard
700 — 850±100 rpm

4. Ignition Timing

A: INSPECTION

CAUTION:
After warming-up, engine becomes very hot. Be careful not to burn yourself at measurement.

1. METHOD WITH SUBARU SELECT MONITOR

1) Before checking the ignition timing, check the following item:
   (1) Check the air cleaner element is free from clogging, spark plugs are in good condition, and hoses are connected properly.
   (2) Check the malfunction indicator light does not illuminate.
2) Warm up the engine.
3) Read the ignition timing using Subaru Select Monitor. <Ref. to EN(H4SO)(diag)-34, READ CURRENT DATA FOR ENGINE (NORMAL MODE), OPERATION, Subaru Select Monitor.>

NOTE:
If ignition timing is out of standard, check the ignition control system. Refer to “Engine Control System”. <Ref. to EN(H4SO)(diag)-2, Basic Diagnostic Procedure.>

Ignition timing [BTDC/rpm]:
Standard
15°±10°/675 (CVT model)
10°±8°/650 (MT model)

2. METHOD WITH TIMING LIGHT

1) Before checking the ignition timing, check the following item:
   (1) Check the air cleaner element is free from clogging, spark plugs are in good condition, and hoses are connected properly.
   (2) Check the malfunction indicator light does not illuminate.
2) Warm up the engine.
3) Stop the engine, and turn the ignition switch to OFF.
4) Connect the timing light to the power wire of #1 ignition coil.
5) Start the engine, turn the timing light to the crank pulley, and check the ignition timing through the timing belt cover gauge.

NOTE:
If the ignition timing is not correct, check the ignition control system. Refer to “Engine Control System”. <Ref. to EN(H4SO)(diag)-2, Basic Diagnostic Procedure.>

Ignition timing [BTDC/rpm]:
Standard
15°±10°/675 (CVT model)
10°±10°/650 (MT model)

6) After inspection, install the related parts in the reverse order of removal.

5. Intake Manifold Vacuum

A: INSPECTION

1) Warm up the engine.
2) Disconnect the brake booster vacuum hose from the intake manifold, and attach the vacuum gauge.

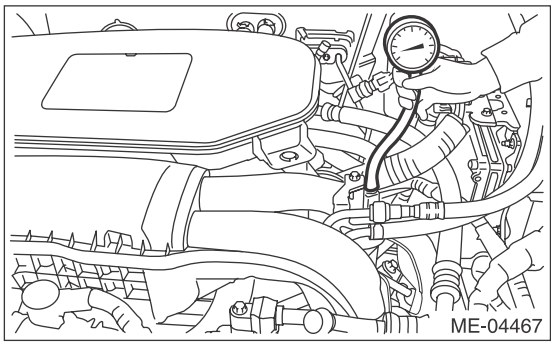

3) Keep the engine at idle speed and read the vacuum gauge indication.

NOTE:
Condition of engine inside can be diagnosed by observing the behavior of the vacuum gauge needle as described in table below.

Intake manifold vacuum (at idling, A/C OFF):
Standard
–60.0 kPa (–450 mmHg, –17.72 inHg) or more

4) After inspection, install the related parts in the reverse order of removal.

Diagnosis of engine condition by inspection of intake manifold vacuum	
Vacuum gauge needle behavior	Possible engine condition
1. Needle is steady but lower than standard value. This tendency becomes more evident as engine temperature rises.	Leakage around intake manifold gasket, disconnection or damage of vacuum hose
2. Needle intermittently drops to position lower than standard value.	Leakage around cylinder
3. Needle drops suddenly and intermittently from standard value.	Sticky valve
4. When engine speed is gradually increased, needle begins to vibrate rapidly at certain speed, and then vibration increases as engine speed increases.	Weak or broken valve springs
5. Needle vibrates above and below standard value in narrow range.	Defective ignition system

6. Engine Oil Pressure

A: INSPECTION

1) Disconnect the ground cable from battery.

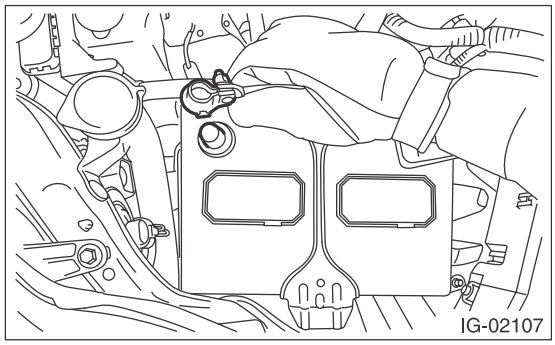

2) Remove the oil pressure switch. <Ref. to LU(H4SO)-23, REMOVAL, Oil Pressure Switch.>
3) Attach the oil pressure gauge to the cylinder block.

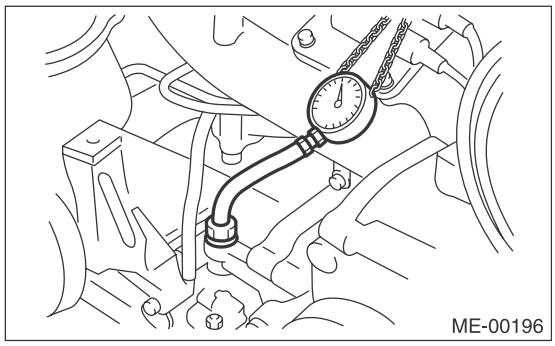

4) Connect the ground cable to battery.

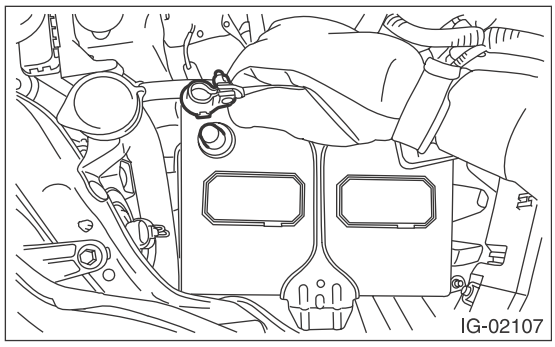

5) Start the engine, and measure the oil pressure.

NOTE:
• Standard value is based on an engine oil temperature of 80°C (176°F).
• If the oil pressure is out of specification, check oil pump, oil filter and lubrication line. <Ref. to LU(H4SO)-42, INSPECTION, Engine Lubrication System Trouble in General.>
• If the oil pressure warning light is ON and oil pressure is within specification, check the oil pressure switch. <Ref. to LU(H4SO)-42, INSPECTION, Engine Lubrication System Trouble in General.>

Engine oil pressure:
Standard
98 kPa (1.0 kgf/cm^2, 14 psi) or more at 600 rpm
294 kPa (3.0 kgf/cm^2, 43 psi) or more at 5,000 rpm

6) After inspection, install the related parts in the reverse order of removal.

7. Fuel Pressure

A: INSPECTION

CAUTION:
• Before removing the fuel pressure gauge, release the fuel pressure.
• Be careful not to spill fuel.
• Catch the fuel from hoses using a container or cloth.

1) Release the fuel pressure. <Ref. to FU(H4SO)-46, RELEASING OF FUEL PRESSURE, PROCEDURE, Fuel.>
2) Open the fuel filler lid and remove the fuel filler cap.
3) Disconnect the fuel delivery hose and connect the fuel pressure gauge.

CAUTION:
• Be careful not to spill fuel.
• Catch the fuel from hoses using a container or cloth.

(1) Attach ST to the fuel delivery pipe and push ST1 in the direction of arrow mark to disconnect the quick connector of the fuel delivery hose.

ST 42099AE000 QUICK CONNECTOR RELEASE

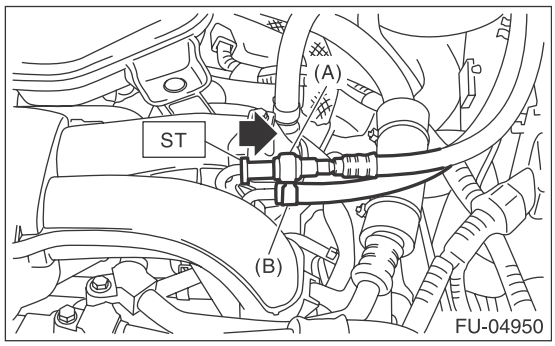

(2) Connect the fuel pressure gauge with ST2 and ST3.

NOTE:
ST2 is a SUBARU genuine part.
ST2 42075AG690 FUEL HOSE
ST3 18471AA000 FUEL PIPE ADAPTER

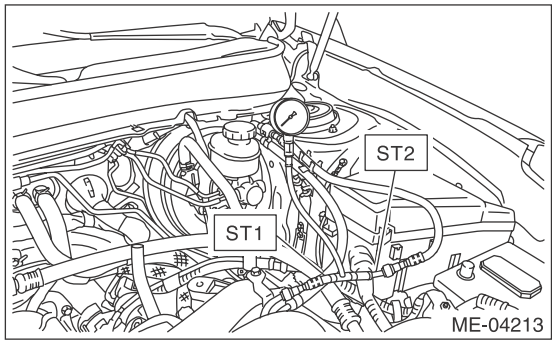

(A) ST2
(B) ST3

4) Start the engine.
5) Measure the fuel pressure after warming up the engine.

NOTE:
• The fuel pressure gauge registers 10 to 20 kPa (0.1 to 0.2 kgf/cm^2, 1 to 3 psi) higher than standard values during high-altitude operations.
• Check or replace the fuel pump and fuel delivery line if the fuel pressure is out of the standard.

Fuel pressure:
Standard
340 — 400 kPa (3.5 — 4.1 kgf/cm^2, 49 — 58 psi)

6) After inspection, install the related parts in the reverse order of removal.

8. Valve Clearance

A: INSPECTION

CAUTION:
If engine oil is spilt onto the exhaust pipe, wipe it off with cloth to avoid emission of smoke or causing a fire.

NOTE:
Inspection and adjustment of valve clearance should be performed while engine is cold.

1) Lift up the vehicle.
2) Remove the under cover. <Ref. to EI-35, REMOVAL, Front Under Cover.>
3) Lower the vehicle.
4) Disconnect the ground cable from battery.

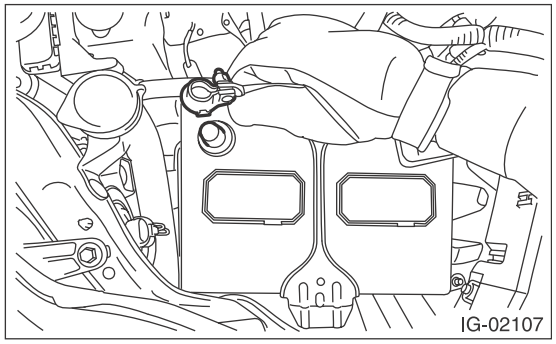

5) Remove the timing belt cover LH.

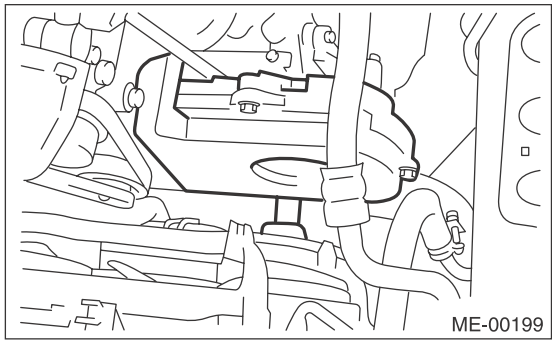

6) Remove the fuel injector. <Ref. to FU(H4SO)-32, REMOVAL, Fuel Injector.>
7) When inspecting #1 and #3 cylinders
   (1) Disconnect the ignition coil from spark plug on RH side. <Ref. to IG(H4SO)-3, RH SIDE, REMOVAL, Spark Plug.>
   (2) Place a suitable container under the vehicle.
   (3) Disconnect the PCV hose from the rocker cover RH.
   (4) Remove the bolts, then remove the rocker cover RH.
8) When inspecting #2 and #4 cylinders
   (1) Disconnect the ignition coil from spark plug on LH side. <Ref. to IG(H4SO)-3, LH SIDE, REMOVAL, Spark Plug.>
   (2) Place a suitable container under the vehicle.
   (3) Disconnect the PCV hose from the rocker cover LH.
   (4) Remove the bolts, then remove the rocker cover LH.
9) Set #1 cylinder piston to top dead center of compression stroke by rotating the crank pulley clockwise using the socket wrench.

NOTE:
When the arrow mark (A) on cam sprocket LH is at the top position, the #1 cylinder piston is at top dead center of the compression stroke.

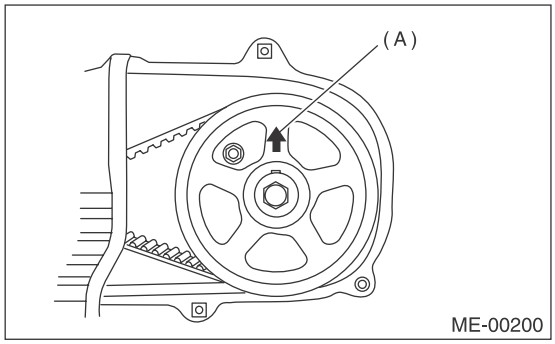

10) Measure #1 cylinder valve clearance by using thickness gauge (A).

NOTE:
• Insert the thickness gauge (A) in as horizontally as possible with respect to the valve stem end face.
• Lift up the vehicle, and then measure the exhaust valve clearances.
• If the measured value is not within the inspection value, take notes of the value in order to adjust the valve clearance later on.

Valve clearance (inspection value):
Intake
0.20±0.04 mm (0.0079±0.0016 in)
Exhaust
0.25±0.04 mm (0.0098±0.0016 in)

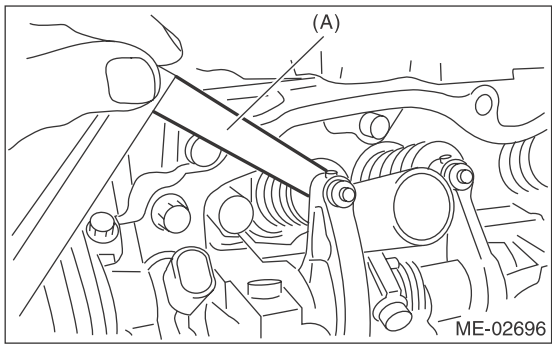

11) Measure the valve clearance in #3, #2 and #4 cylinder in the same measurement procedure as #1 cylinder in this order.

NOTE:
• Be sure to set the cylinder pistons to their respective top dead centers on compression stroke before measuring valve clearances.

• By rotating the crank pulley clockwise every 180° from the state that #1 cylinder piston is on the top dead center of compression stroke, #3, #2 and #4 cylinder pistons come to the top dead center of compression stroke in this order.
12) If necessary, adjust the valve clearance. <Ref. to ME(H4SO)-30, ADJUSTMENT, Valve Clearance.>
13) After inspection, install the related parts in the reverse order of removal.

NOTE:
Use a new rocker cover gasket.

B: ADJUSTMENT

CAUTION:
If engine oil is spilt onto the exhaust pipe, wipe it off with cloth to avoid emission of smoke or causing a fire.

NOTE:
Adjustment of valve clearance should be performed while engine is cold.
1) Set #1 cylinder piston to top dead center of compression stroke by rotating the crank pulley clockwise using the socket wrench.

NOTE:
When the arrow mark (A) on cam sprocket LH is at the top position, the #1 cylinder piston is at top dead center of the compression stroke.

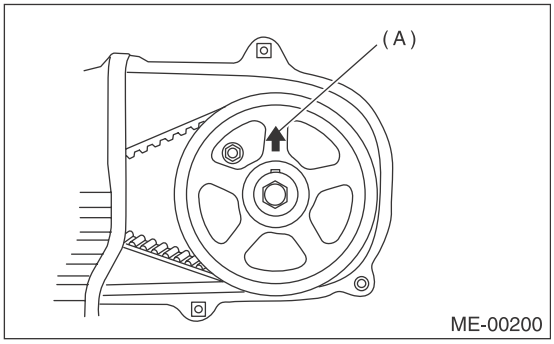

2) Adjust the #1 cylinder valve clearance.
(1) Loosen the valve rocker nut and screw.
(2) Set a suitable thickness gauge.
(3) While noting the valve clearance, tighten the valve rocker adjusting screw.
(4) When the specified valve clearance is obtained, tighten the valve rocker nut.

NOTE:
• Insert a thickness gauge in a direction as horizontal as possible with respect to the valve stem end face.
• Lift up the vehicle and adjust the exhaust valve clearances.

Valve clearance (adjustment value):
Intake
0.20±0.04 mm (0.0079±0.0016 in)
Exhaust
0.25±0.04 mm (0.0098±0.0016 in)

Tightening torque:
9.75 N·m (1.0 kgf-m, 7.2 ft-lb)

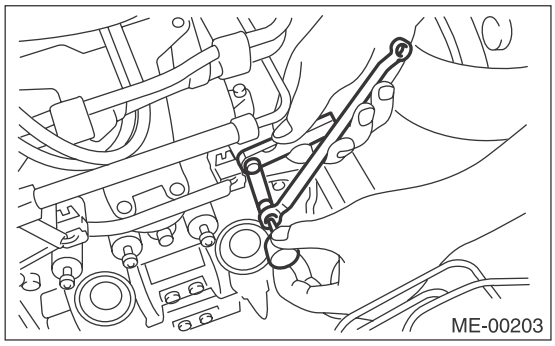

3) Adjust the valve clearance in #3, #2 and #4 cylinder in the same adjustment procedure as #1 cylinder in this order.

NOTE:
• Be sure to set the cylinder pistons to their respective top dead centers on compression stroke before adjusting valve clearances.
• By rotating the crank pulley clockwise every 180° from the state that #1 cylinder piston is on the top dead center of compression stroke, #3, #2 and #4 cylinder pistons come to the top dead center of compression stroke in this order.
4) Ensure the valve clearances of each cylinder are within specifications. If necessary, readjust the valve clearances.
5) After measuring, install the related parts in the reverse order of removal.

NOTE:
Use a new rocker cover gasket.

9. Engine Assembly

A: REMOVAL

1) Change the front hood damper mounting position from (A) to (B), and completely open the front hood.

Tightening torque:
20 N·m (2.0 kgf-m, 14.8 ft-lb)

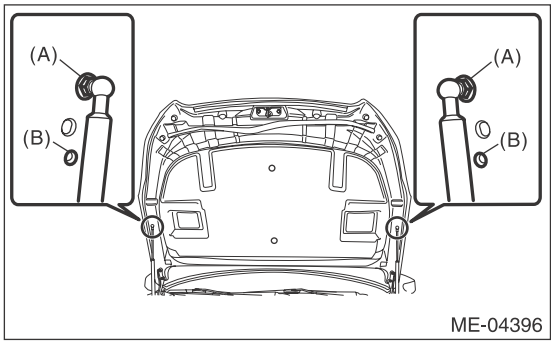

2) Remove the V-belt covers.
3) Collect the refrigerant from A/C system. <Ref. to AC-18, Refrigerant Recovery Procedure.>
4) Release the fuel pressure. <Ref. to FU(H4SO)-46, RELEASING OF FUEL PRESSURE, PROCEDURE, Fuel.>
5) Disconnect the ground cable from battery.

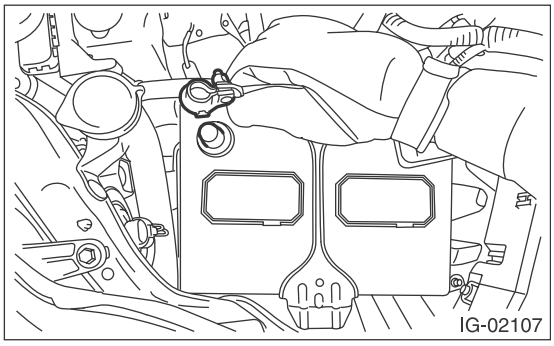

6) Open the fuel filler lid and remove the fuel filler cap.
7) Remove the air intake duct. <Ref. to IN(H4SO)-9, REMOVAL, Air Intake Duct.>
8) Remove the air intake boot assembly. <Ref. to IN(H4SO)-8, REMOVAL, Air Intake Boot.>
9) Remove the radiator. <Ref. to CO(H4SO)-20, REMOVAL, Radiator.>
10) Remove the front exhaust pipe. <Ref. to EX(H4SO)-4, REMOVAL, Front Exhaust Pipe.>
11) Lower the vehicle.
12) Remove the bolt, and disconnect the bulkhead harness connector from the engine harness connector and rear engine hanger.

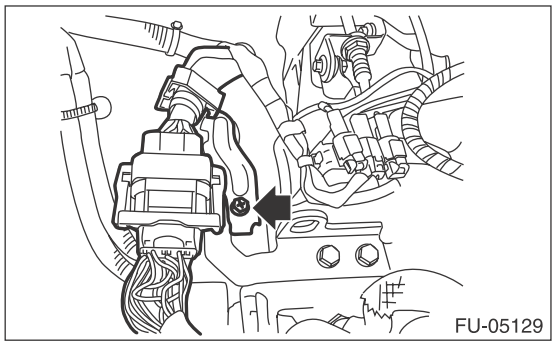

13) Slide the engine harness connector in the direction of the arrow and remove it from the rear engine hanger.

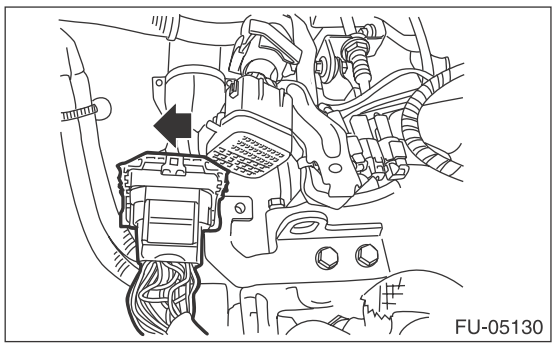

14) Disconnect connector (A) and terminal (B) from the generator, and remove the generator cord from clip (C).
15) Disconnect connector (D) from the A/C compressor.

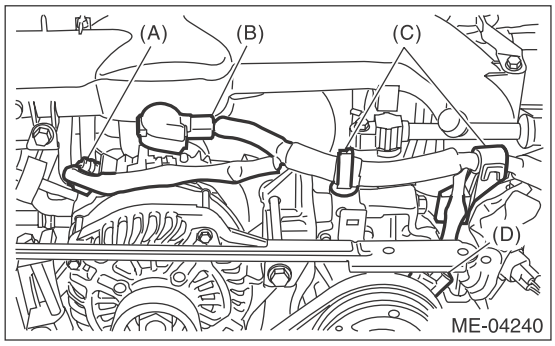

16) Remove the clip which secure the generator cord to the intake manifold protector LH.

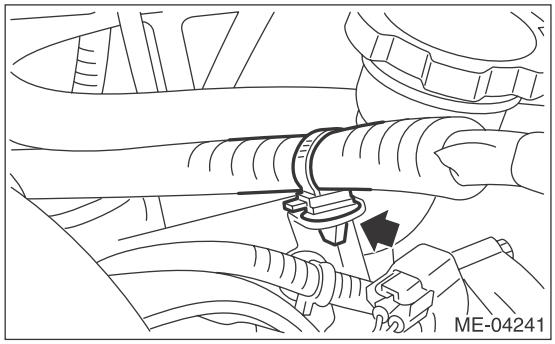

17) Disconnect the following hoses.
(1) A/C pressure hose <Ref. to AC-65, REMOVAL, Hose and Pipe.>
(2) Brake booster vacuum hose

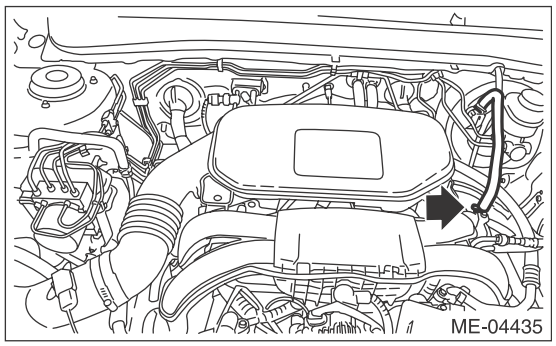

(3) Heater inlet hose and heater outlet hose

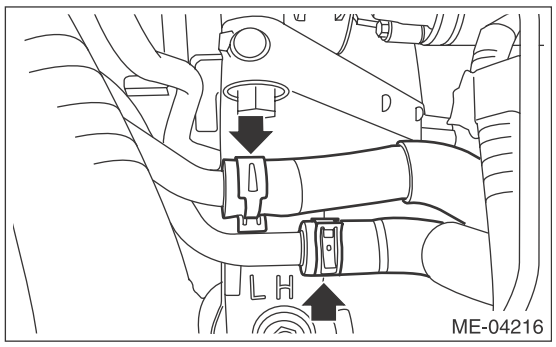

18) Lift up the vehicle.
19) Disconnect the ground cable on the engine side.

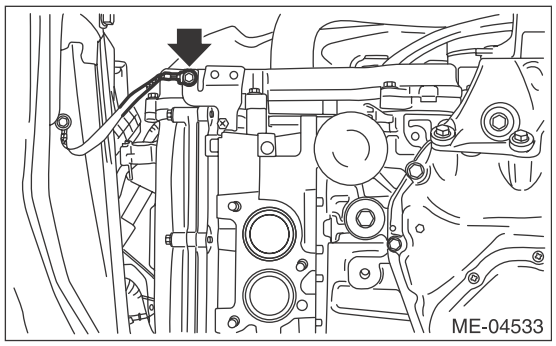

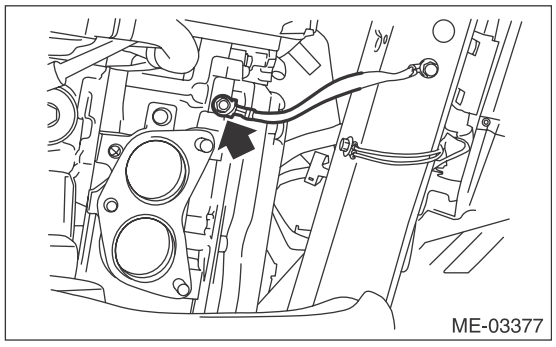

20) Lower the vehicle.
21) Separate the torque converter clutch from the drive plate. (CVT model)
(1) Remove the service hole plug.
(2) Insert the wrench into the crank pulley bolt, and rotate the crank pulley to remove the four bolts which hold torque converter clutch to the drive plate.

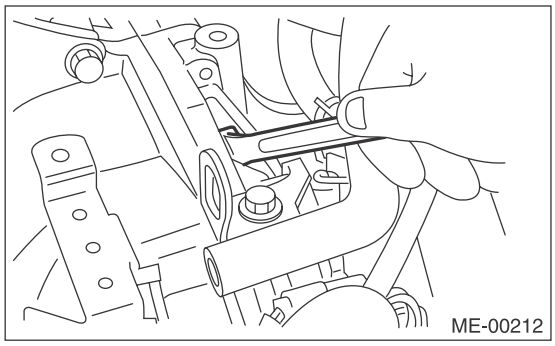

22) Disconnect the fuel delivery hose (A) and evaporation hose (B).

CAUTION:
- **Be careful not to spill fuel.**
- **Catch the fuel from hoses using a container or cloth.**

(1) Attach ST to the fuel delivery pipe and push ST in the direction of arrow mark to disconnect the quick connector of the fuel delivery hose (A).

ST 42099AE000 QUICK CONNECTOR RELEASE

(2) Remove the clip and disconnect the evaporation hose (B) from the evaporation pipe.

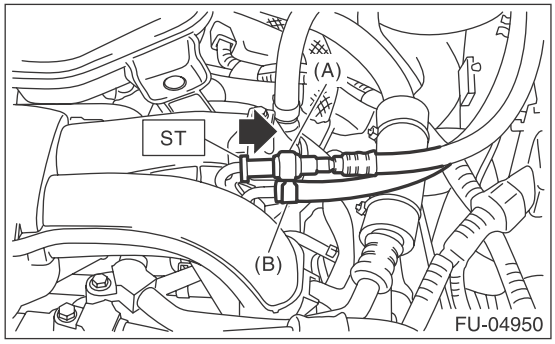

23) Support the engine with a lifting device and wire ropes.

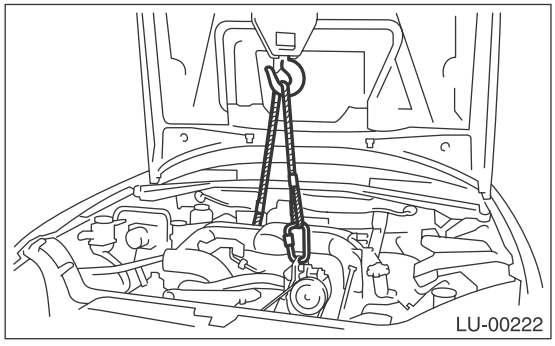

24) Remove the stopper rod.

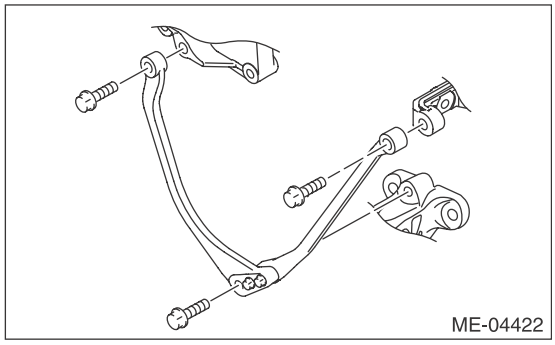

25) Remove the bolt and nut which secure engine mounting to the cradle.

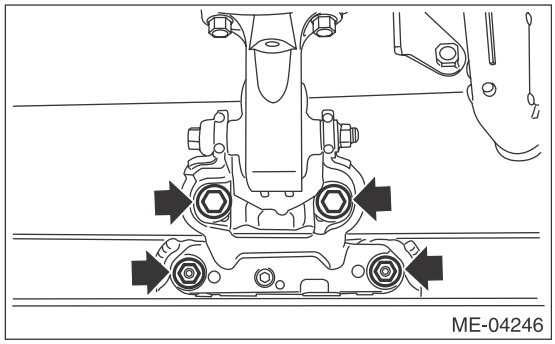

26) Lift up the vehicle.

CAUTION:
When lifting up the vehicle, raise up wire ropes at the same time.

27) Remove the bolts which secure the engine mounting onto the engine, and remove the engine mounting.

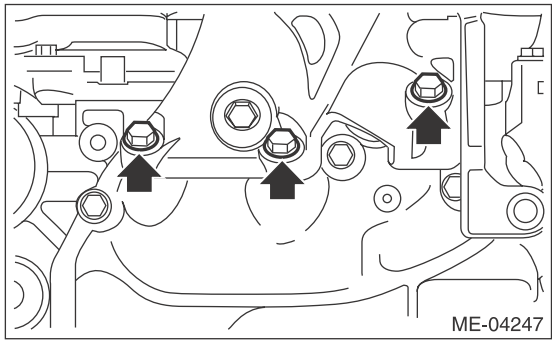

28) Remove the bolts and nuts which hold the lower side of transmission to the engine.

- CVT model

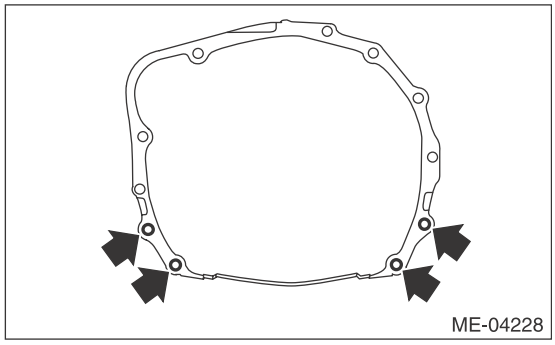

- MT model

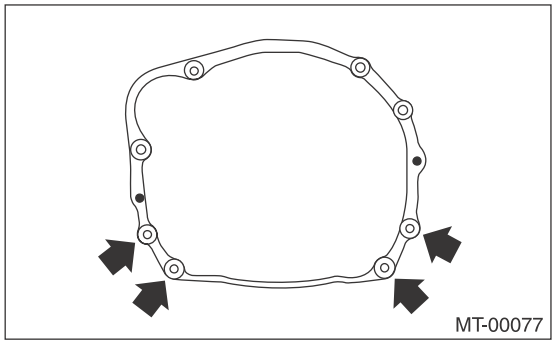

29) Lower the vehicle.

CAUTION:
When lifting down the vehicle, lower wire ropes at the same time.

30) Support the transmission with a garage jack.

NOTE:
Fine adjustment of the transmission height can be performed with this operation.

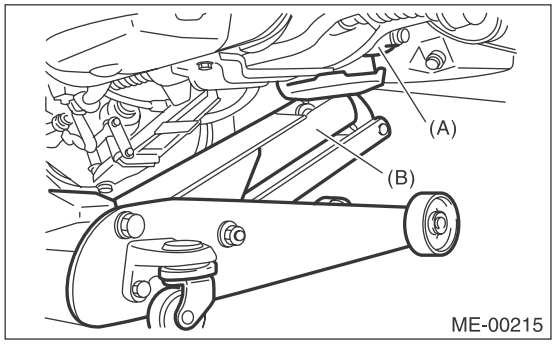

(A) TRANSMISSION
(B) Garage jack

31) Separation of engine and transmission

CAUTION:
Before removing the engine away from transmission, check to be sure no work has been overlooked.

(1) Remove the starter. <Ref. to SC(H4SO)-9, REMOVAL, Starter.>
(2) Attach the ST to the torque converter clutch case. (CVT model)

ST 498277200 STOPPER SET

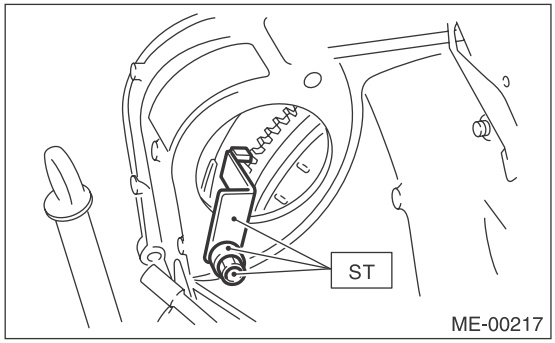

(3) Remove the bolts which hold the upper side of the transmission to the engine.

- CVT model

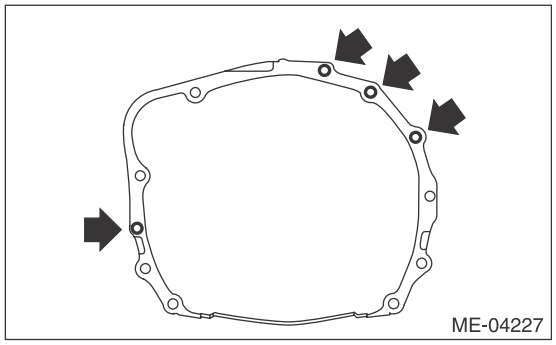

- MT model

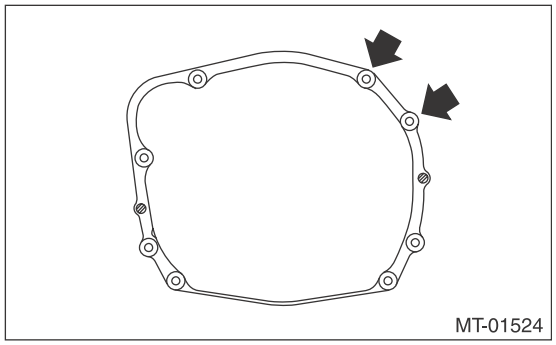

32) Remove the engine from vehicle.
(1) Slightly raise the engine.
(2) Adjust the height of the transmission with garage jack.
(3) Move the engine horizontally until main shaft is withdrawn from clutch cover. (MT model)
(4) Move the engine from engine compartment slowly.

NOTE:
Be careful not to damage adjacent parts or body panels with crank pulley, oil level gauge, etc.

B: INSTALLATION

1) Apply a small amount of grease to splines of main shaft. (MT model)

Grease:
NICHIMOLY N-130 or equivalent

2) Position the engine in engine compartment and align it with transmission.

NOTE:
Be careful not to damage adjacent parts or body panels with crank pulley, oil level gauge, etc.

3) Tighten the bolts which hold upper side of transmission to engine.

Tightening torque:
50 N·m (5.1 kgf-m, 36.9 ft-lb)

- CVT model

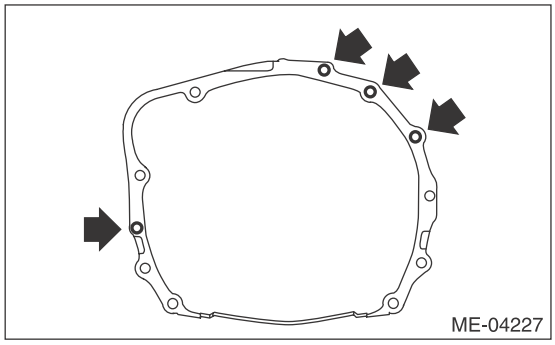

- MT model

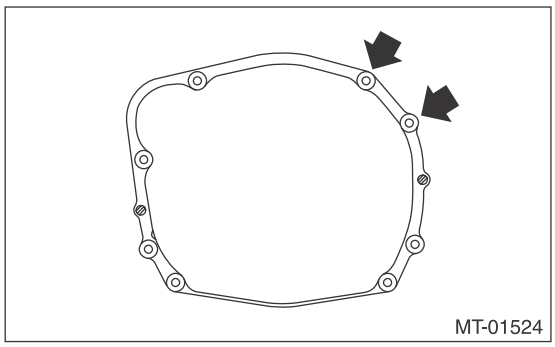

4) Remove the garage jack.
5) Remove the ST from torque converter clutch case. (CVT model)

NOTE:
Be careful not to drop the ST into the torque converter clutch case when removing the ST.
ST 498277200 STOPPER SET

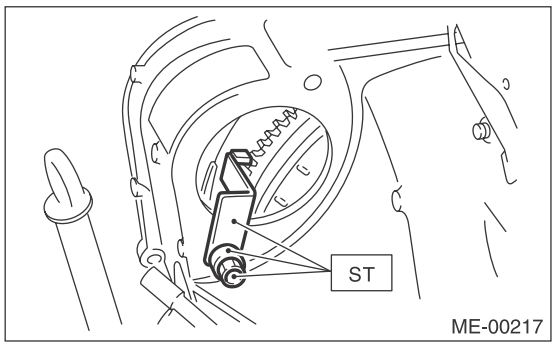

6) Install the starter. <Ref. to SC(H4SO)-9, INSTALLATION, Starter.>
7) Lift up the vehicle.

CAUTION:
When lifting up the vehicle, raise up wire ropes at the same time.

8) Attach the bolts and nuts which hold lower side of the transmission to engine.

Tightening torque:
50 N·m (5.1 kgf-m, 36.9 ft-lb)

- CVT model

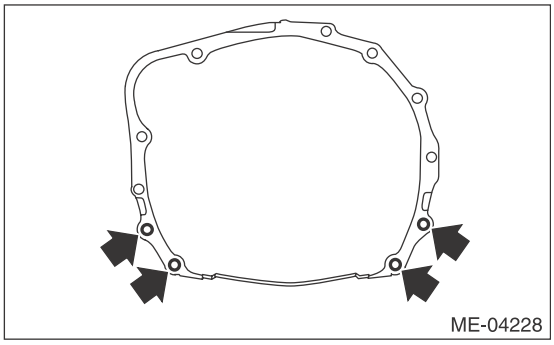

- MT model

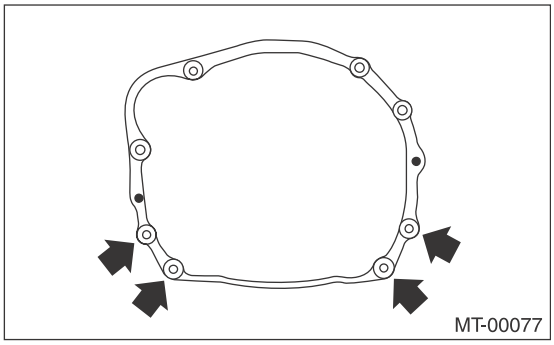

9) Set the engine mounting, and tighten the bolts which hold engine mounting to the engine.

Tightening torque:
58 N·m (5.9 kgf-m, 42.8 ft-lb)

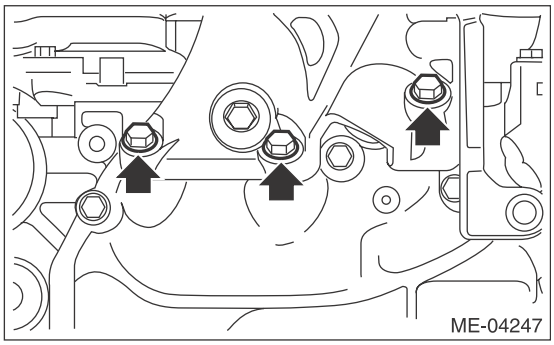

10) Lower the vehicle.

CAUTION:
When lifting down the vehicle, lower wire ropes at the same time.

11) Attach the bolts and nuts which secure engine mounting to the cradle.

Tightening torque:
60 N·m (6.1 kgf-m, 44.3 ft-lb)

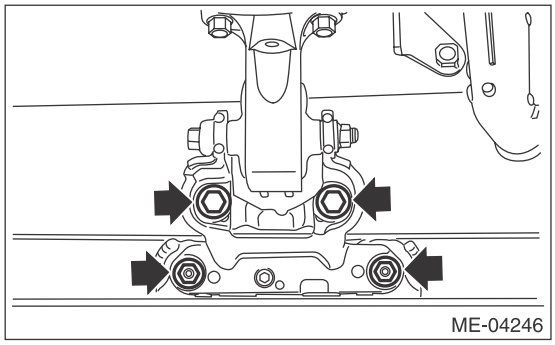

12) Install the stopper rod.

Tightening torque:
36 N·m (3.7 kgf-m, 26.6 ft-lb)

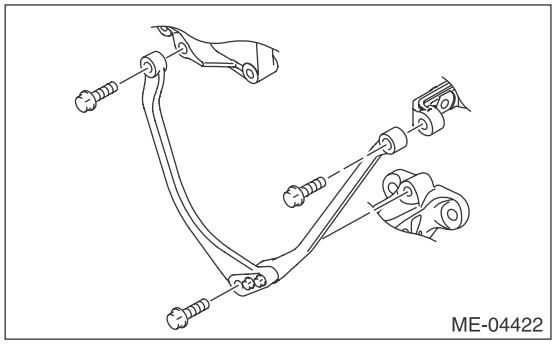

13) Remove the lifting device and wire ropes.

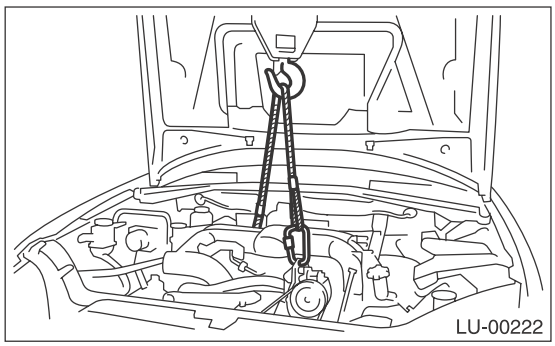

14) Install the torque converter clutch to drive plate. (CVT model)
(1) Insert the wrench into the crank pulley bolt, and rotate the crank pulley to attach the four bolts which hold torque converter clutch to the drive plate.

NOTE:
Be careful not to drop bolts into the torque converter clutch case.

Tightening torque:
25 N·m (2.5 kgf-m, 18.4 ft-lb)

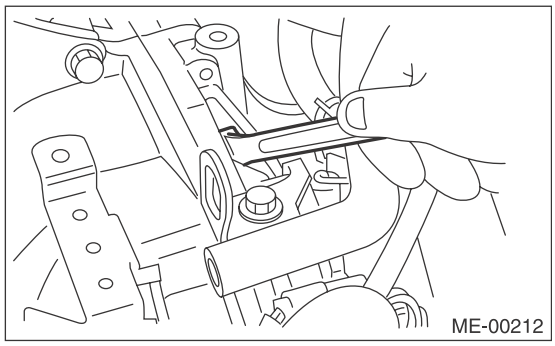

(2) Fit the plug to service hole.

15) Lift up the vehicle.

16) Install the engine harness cover, and connect the ground cable.

Tightening torque:
7.5 N·m (0.8 kgf-m, 5.5 ft-lb)

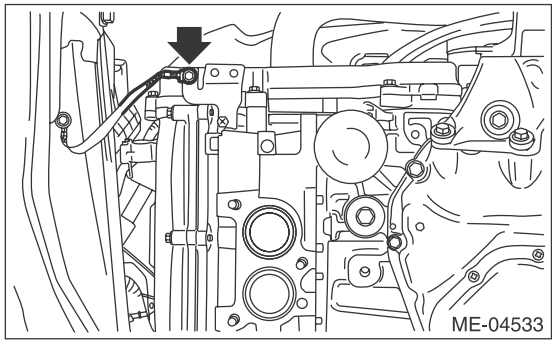

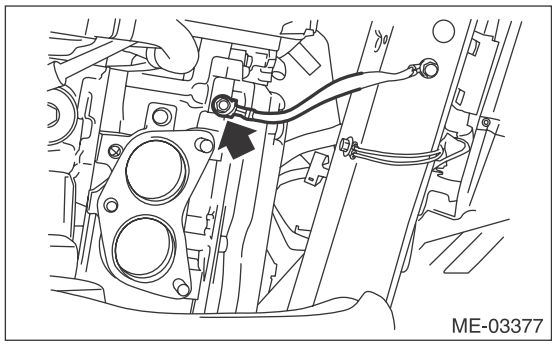

17) Lower the vehicle.

18) Connect the following hoses.
(1) Fuel delivery hose
(2) Evaporation hose
(3) Heater inlet hose and heater outlet hose
(4) Brake booster vacuum hose
(5) A/C pressure hose <Ref. to AC-65, INSTALLATION, Hose and Pipe.>

19) Install the clip which secure the generator cord to the intake manifold protector LH.

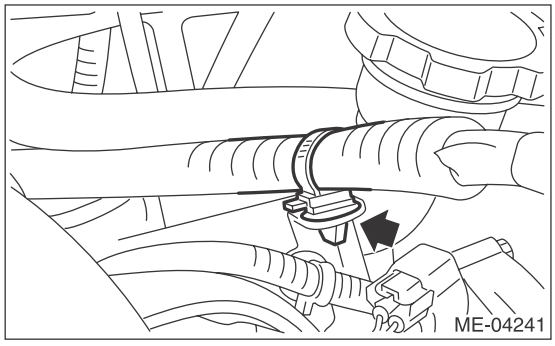

20) Connect connector (D) to the A/C compressor.

21) Install the generator cord to clip (C), and connect connector (A) and terminal (B) to the generator.

Tightening torque:
15 N·m (1.5 kgf-m, 11.1 ft-lb)

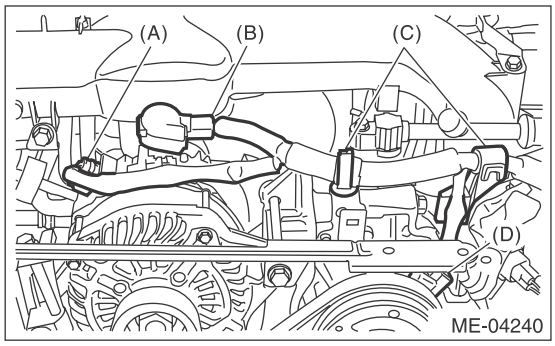

22) Connect the engine harness connector to the bulkhead harness connector, attach it to the rear engine hanger, and fasten with bolt.

Tightening torque:
6.4 N·m (0.7 kgf-m, 4.7 ft-lb)

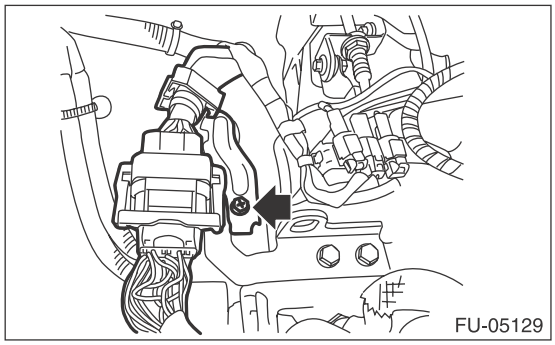

23) Install the front exhaust pipe. <Ref. to EX(H4SO)-5, INSTALLATION, Front Exhaust Pipe.>

24) Install the radiator. <Ref. to CO(H4SO)-21, INSTALLATION, Radiator.>

25) Install the air intake boot assembly. <Ref. to IN(H4SO)-8, INSTALLATION, Air Intake Boot.>

26) Install the air intake duct. <Ref. to IN(H4SO)-9, INSTALLATION, Air Intake Duct.>

27) Connect the ground cable to battery.

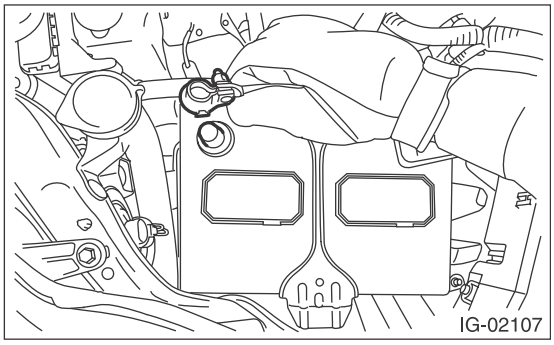

28) Fill engine coolant. <Ref. to CO(H4SO)-14, FILLING OF ENGINE COOLANT, REPLACEMENT, Engine Coolant.>
29) Charge the A/C system with refrigerant. <Ref. to AC-19, PROCEDURE, Refrigerant Charging Procedure.>
30) Check the CVTF level and replenish it if necessary. (CVT model) <Ref. to CVT-35, ADJUSTMENT, CVTF.>
31) Install the V-belt cover.
32) Change the front hood damper mounting position from (B) to (A), and close the front hood.

Tightening torque:
20 N·m (2.0 kgf-m, 14.8 ft-lb)

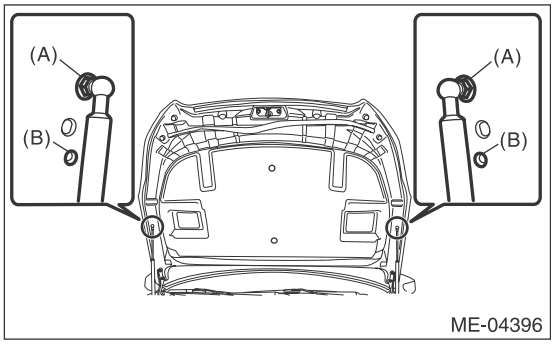

C: INSPECTION

1) Check that the pipes, hoses, connectors and clamps are securely connected.
2) Check that the engine coolant is up to specified level.
3) Check CVTF is at the specified level. (CVT model)
4) Start the engine and check for exhaust gas leakage, engine coolant leakage, fuel leakage, noise or vibration.

10.Engine Mounting

A: REMOVAL

1) Change the front hood damper mounting position from (A) to (B), and completely open the front hood.

Tightening torque:
20 N·m (2.0 kgf-m, 14.8 ft-lb)

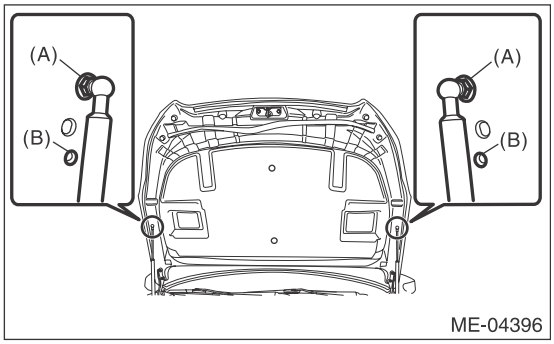

2) Disconnect the ground cable from battery.

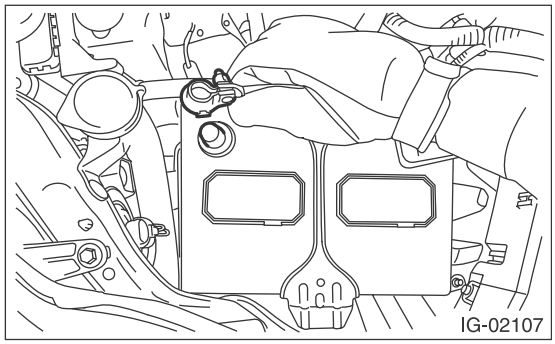

3) Remove the radiator main fan motor assembly and radiator sub fan motor assembly. <Ref. to CO(H4SO)-24, REMOVAL, Radiator Main Fan and Fan Motor.> <Ref. to CO(H4SO)-25, REMOVAL, Radiator Sub Fan and Fan Motor.>
4) Lift up the vehicle.
5) Remove the under cover. <Ref. to EI-35, REMOVAL, Front Under Cover.>
6) Remove the front exhaust pipe. <Ref. to EX(H4SO)-4, REMOVAL, Front Exhaust Pipe.>
7) Lower the vehicle.
8) Support the engine with a lifting device and wire ropes.

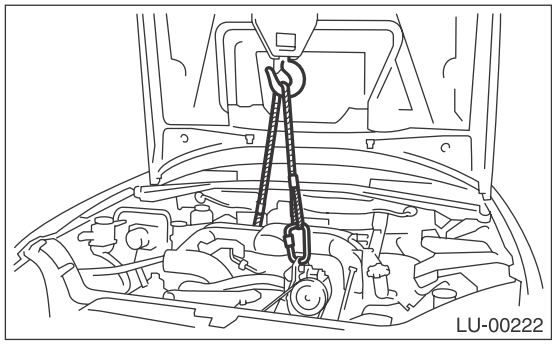

9) Remove the stopper rod.

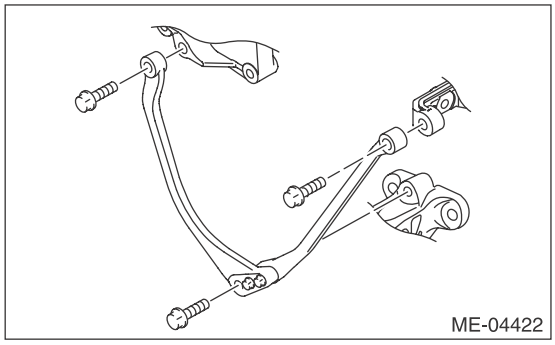

10) Remove the bolt and nut which secure engine mounting to the cradle.

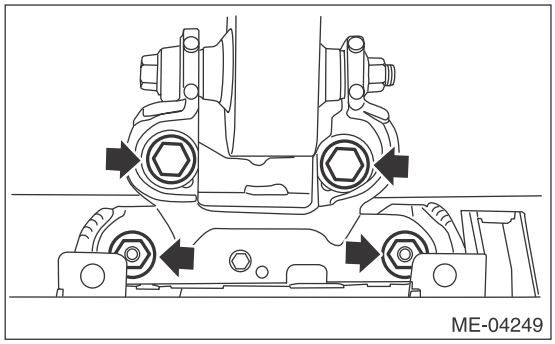

11) Lift up the vehicle.

CAUTION:
When lifting up the vehicle, raise up wire ropes at the same time.

12) Remove the bolts which secure the engine mounting onto the engine, and remove the engine mounting.

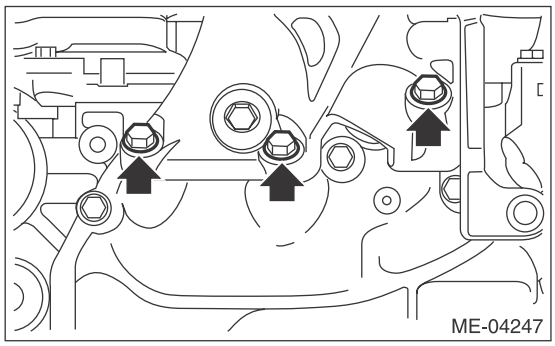

B: INSTALLATION

1) Set the engine mounting, and tighten the bolts which hold engine mounting to the engine.

Tightening torque:
58 N·m (5.9 kgf-m, 42.8 ft-lb)

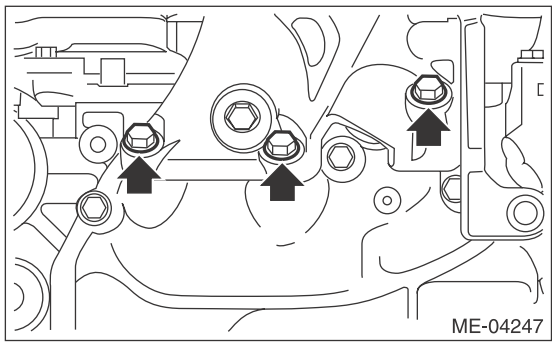

2) Lower the vehicle.

CAUTION:
When lifting down the vehicle, lower wire ropes at the same time.

3) Attach the bolts and nuts which secure engine mounting to the cradle.

Tightening torque:
60 N·m (6.1 kgf-m, 44.3 ft-lb)

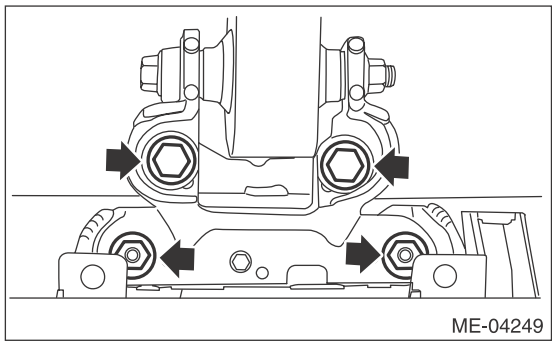

4) Install the stopper rod.

Tightening torque:
36 N·m (3.7 kgf-m, 26.6 ft-lb)

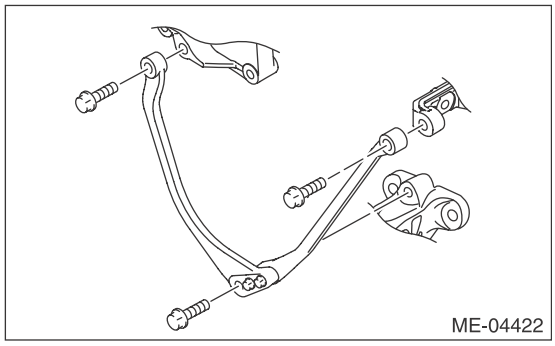

5) Remove the lifting device and wire ropes.

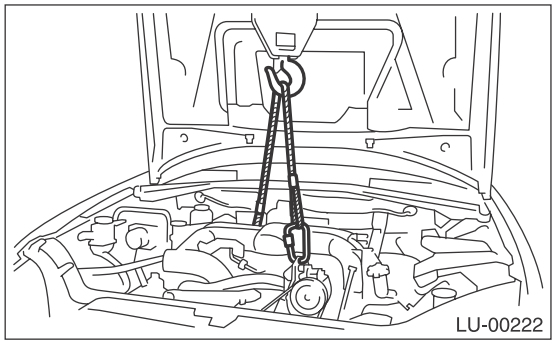

6) Lift up the vehicle.
7) Install the front exhaust pipe. <Ref. to EX(H4SO)-5, INSTALLATION, Front Exhaust Pipe.>
8) Install the under cover. <Ref. to EI-35, INSTALLATION, Front Under Cover.>
9) Lower the vehicle.
10) Install the radiator main fan motor assembly and radiator sub fan motor assembly. <Ref. to CO(H4SO)-24, INSTALLATION, Radiator Main Fan and Fan Motor.> <Ref. to CO(H4SO)-25, INSTALLATION, Radiator Sub Fan and Fan Motor.>
11) Connect the ground cable to battery.

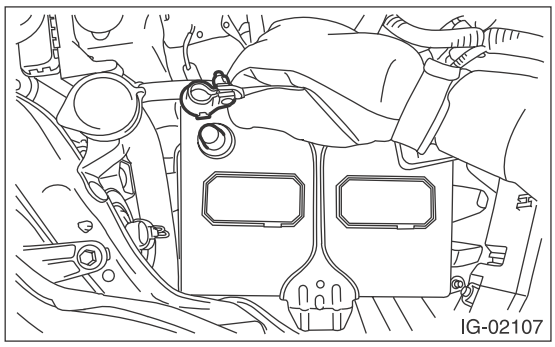

12) Change the front hood damper mounting position from (B) to (A), and close the front hood.

Tightening torque:
20 N·m (2.0 kgf-m, 14.8 ft-lb)

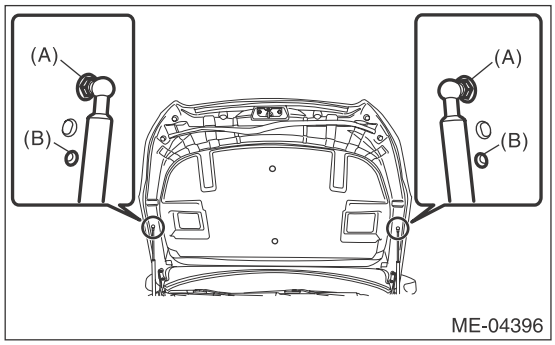

C: DISASSEMBLY

1) Remove the front cushion rubber from the engine mounting bracket.

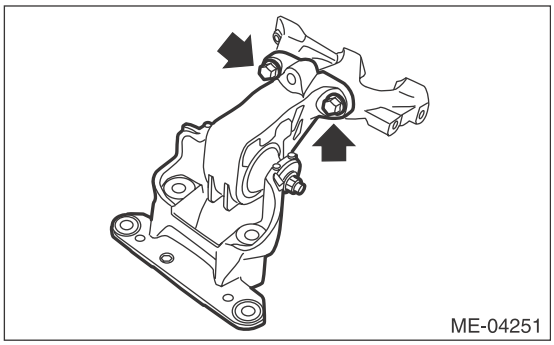

2) Remove the front cushion rubber from the front mounting bracket.

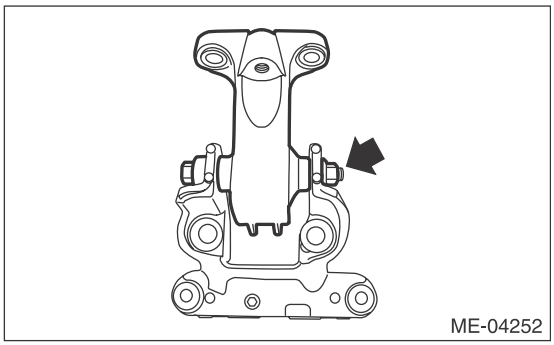

D: ASSEMBLY

1) Install the front cushion rubber to the front mounting bracket.

Tightening torque:
45 N·m (4.6 kgf-m, 33.2 ft-lb)

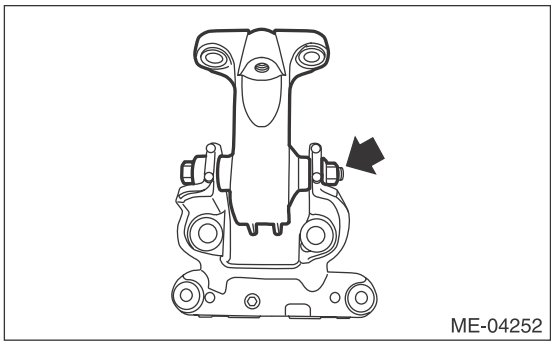

2) Install the front cushion rubber to the engine mounting bracket.

Tightening torque:
25 N·m (2.5 kgf-m, 18.4 ft-lb)

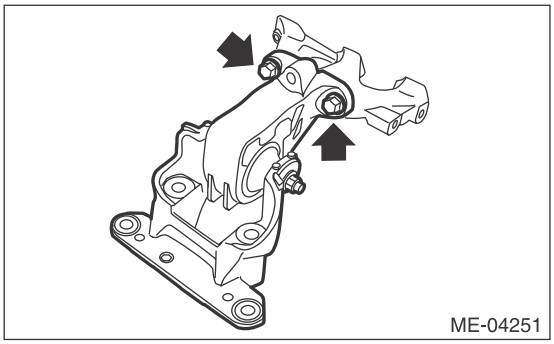

E: INSPECTION

Check that the engine mounting does not have deformation, cracks and any other damage.

11.Preparation for Overhaul

A: PROCEDURE

1) After removing the engine from vehicle body, attach the ST to the engine as shown in the figure.

ST1	498457000	ENGINE STAND ADAPTER RH
ST2	498457100	ENGINE STAND ADAPTER LH
ST3	499817100	ENGINE STAND

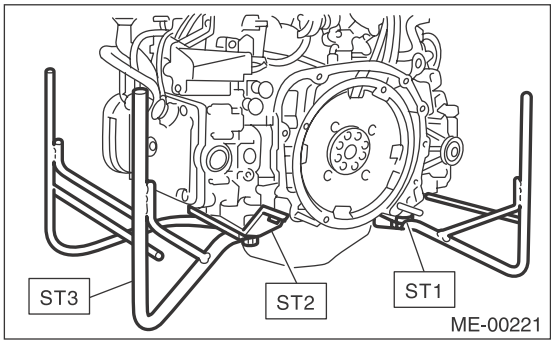

2) In this section the procedures described under each index are all connected and stated in order. Engine overhaul will be completed when you go through all steps in the procedure.
Therefore, in this section, to conduct the particular procedure within the flow of a section, you need to go back and conduct the procedure described previously in order to do that particular procedure.

12.V-belt

A: REMOVAL

NOTE:
When replacing the single part, perform the work with the engine installed to vehicle body.

1. V-BELT

1) Remove the collector cover.
2) Remove the air intake duct. <Ref. to IN(H4SO)-9, REMOVAL, Air Intake Duct.>
3) Attach the tool to the V-belt tensioner assembly, and rotate the tool clockwise to loosen and remove the V-belt.

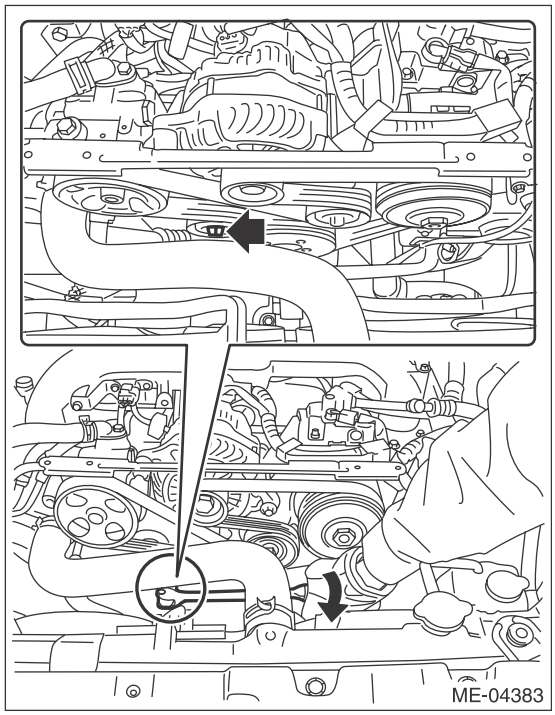

2. V-BELT TENSIONER ASSEMBLY AND IDLER PULLEY

1) Remove the V-belts. <Ref. to ME(H4SO)-42, V-BELT, REMOVAL, V-belt.>
2) Remove the bolt securing the V-belt tensioner assembly to the power steering pump bracket, and remove the V-belt tensioner assembly.

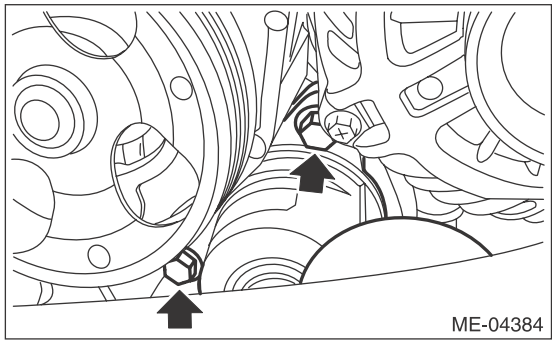

3) Remove the bolt securing the idler pulley to the A/C compressor bracket, and remove the idler pulley.

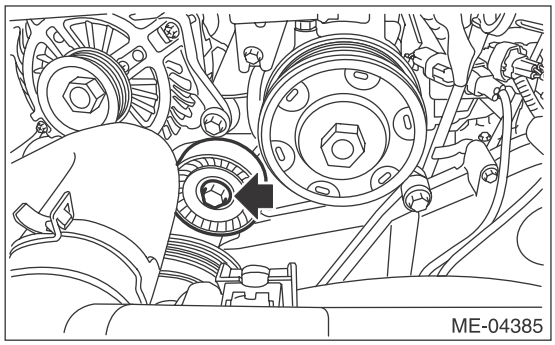

B: INSTALLATION

1. V-BELT

Install in the reverse order of removal.

CAUTION:
• When reusing the V-belt, wipe off dust and water with cloth.
• Do not use the V-belt if there is any oil, grease or coolant on the belt.
• Be careful not to rub the V-belt end surface with bare hands; exposed core may cause injury.
• Wipe off any dust, oil and water on the groove of each pulley with cloth.

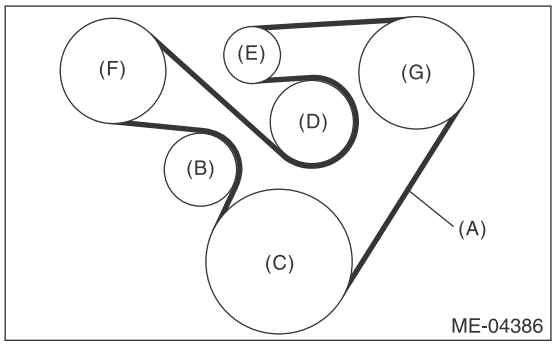

(A) V-belt
(B) V-belt tensioner ASSY
(C) Crank pulley
(D) Idler pulley
(E) Generator pulley
(F) Power steering pump pulley
(G) A/C compressor pulley

2. V-BELT TENSIONER ASSEMBLY AND IDLER PULLEY

Install in the reverse order of removal.

Tightening torque:
25 N·m (2.5 kgf-m, 18.4 ft-lb)

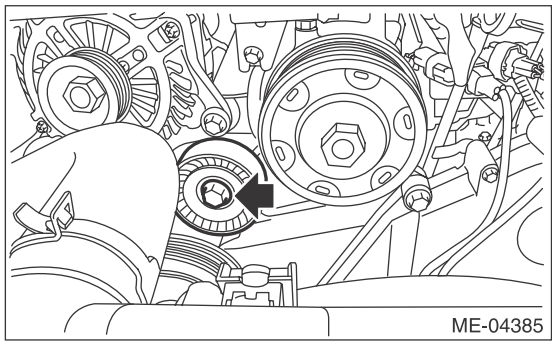

Tightening torque:
20 N·m (2.0 kgf-m, 14.8 ft-lb)

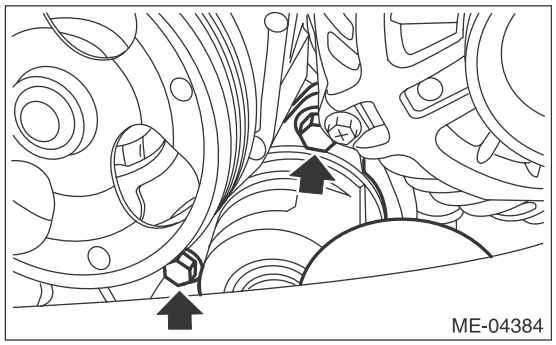

C: INSPECTION

1) Check the V-belt for cracks, tear or wear.
2) Remove the air intake duct. <Ref. to IN(H4SO)-9, REMOVAL, Air Intake Duct.>
3) Check the V-belt tensioner assembly and idler pulley for deformation, cracks or other damages.
4) Check that the V-belt tension indicator (A) is within the limit (B).

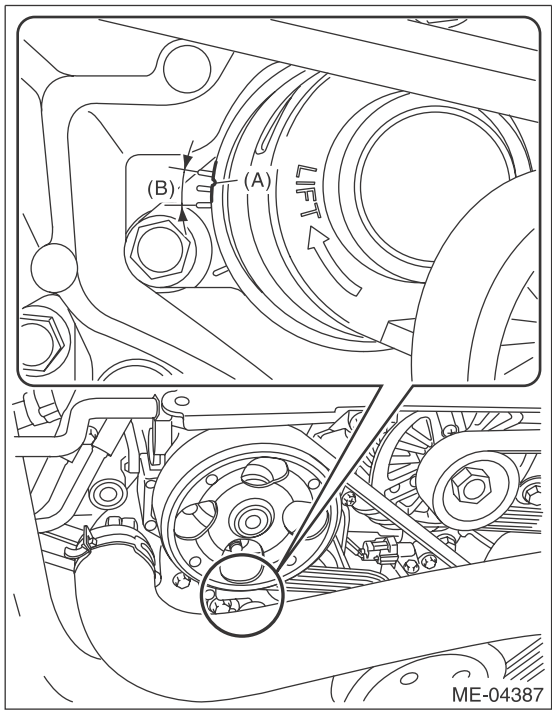

13.Crank Pulley

A: REMOVAL

NOTE:
When replacing the single part, perform the work with the engine installed to vehicle body.
1) Remove the V-belts. <Ref. to ME(H4SO)-42, REMOVAL, V-belt.>
2) Use the ST to lock the crank pulley, and remove the crank pulley bolt.

ST 499977400 CRANK PULLEY WRENCH (CVT MODEL)
ST 499977100 CRANK PULLEY WRENCH (MT MODEL)

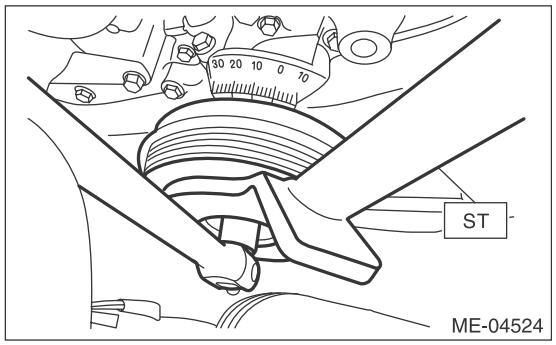

3) Remove the crank pulley.

B: INSTALLATION

1. METHOD WITHOUT ANGLE GAUGE

1) Clean the crankshaft thread using compressed air.
2) Install the crank pulley.
3) Apply engine oil to the crank pulley bolt seat and thread.
4) Tighten the crank pulley bolts.
(1) Use the ST to lock the crank pulley, and temporarily tighten the crank pulley bolt.

ST 499977400 CRANK PULLEY WRENCH (CVT MODEL)
ST 499977100 CRANK PULLEY WRENCH (MT MODEL)

Tightening torque:
47 N·m (4.8 kgf-m, 34.7 ft-lb)

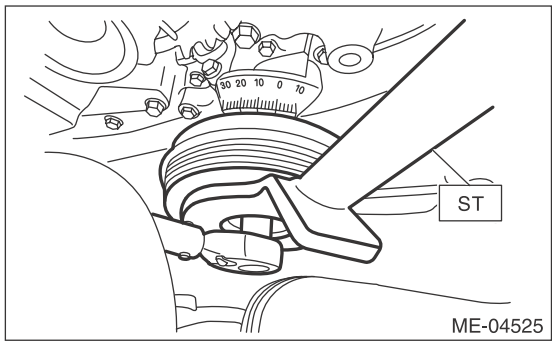

(2) Draw reference lines (A) and (B) using a marker to set the socket to the crank pulley bolt as shown in the figure.

ST 499977400 CRANK PULLEY WRENCH (CVT MODEL)
ST 499977100 CRANK PULLEY WRENCH (MT MODEL)

NOTE:
Set the socket onto the crank pulley bolt so that reference lines (A) and (B) is visible.

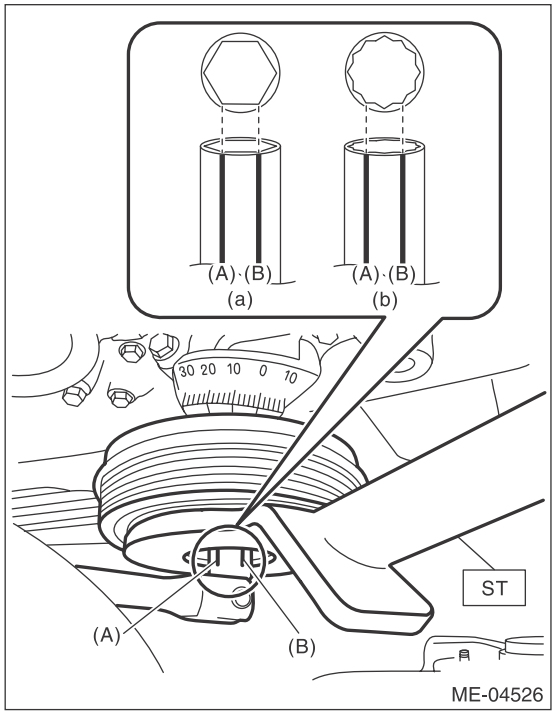

(a) When using 6-point socket
(b) When using 12-point socket

(3) Draw end line (C) on ST using a marker at the same position as reference line (B) was drawn on the socket in step (2).

ST 499977400 CRANK PULLEY WRENCH (CVT MODEL)
ST 499977100 CRANK PULLEY WRENCH (MT MODEL)

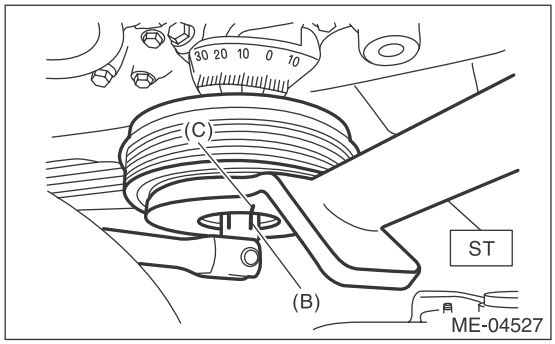

(4) Use the ST to lock the crank pulley, and tighten the crank pulley bolt to the angle where reference line (A) and end line (C) are aligned.

ST	499977400	CRANK PULLEY WRENCH (CVT MODEL)
ST	499977100	CRANK PULLEY WRENCH (MT MODEL)

NOTE:
It should be approx. 60° when reference line (A) and end line (C) are aligned.

Tightening angle:
60°±5°

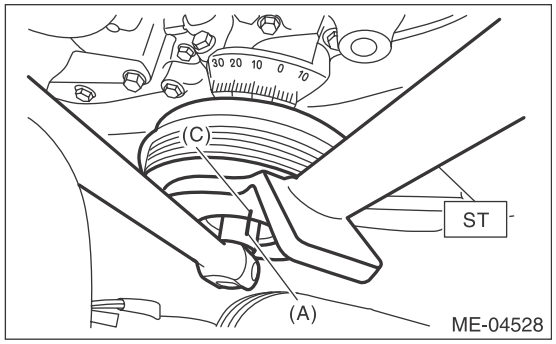

5) Install the V-belts. <Ref. to ME(H4SO)-42, INSTALLATION, V-belt.>

2. METHOD WITH ANGLE GAUGE

1) Clean the crankshaft thread using compressed air.
2) Install the crank pulley.
3) Apply engine oil to the crank pulley bolt seat and thread.
4) Tighten the crank pulley bolts.
(1) Remove the radiator main fan motor assembly and radiator sub motor assembly. <Ref. to CO(H4SO)-24, REMOVAL, Radiator Main Fan and Fan Motor.> <Ref. to CO(H4SO)-25, REMOVAL, Radiator Sub Fan and Fan Motor.>
(2) Use the ST1 to lock the crank pulley, and temporarily tighten the crank pulley bolt.

ST1	499977400	CRANK PULLEY WRENCH (CVT MODEL)
ST1	499977100	CRANK PULLEY WRENCH (MT MODEL)

Tightening torque:
47 N·m (4.8 kgf-m, 34.7 ft-lb)

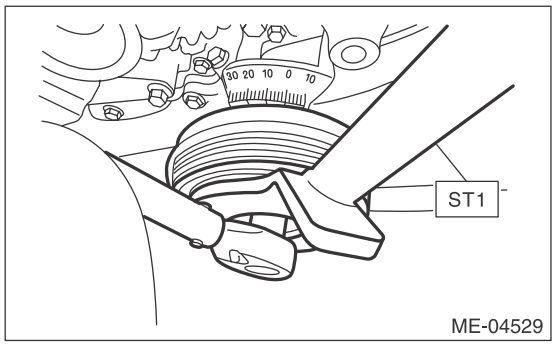

(3) Set the ST2, use the ST1 to lock the crank pulley, and tighten the crank pulley bolt to the specified angle.

ST1	499977400	CRANK PULLEY WRENCH (CVT MODEL)
ST1	499977100	CRANK PULLEY WRENCH (MT MODEL)
ST2	18854AA000	ANGLE GAUGE

NOTE:
Attach the magnet used for securing the ST2 (ANGLE GAUGE) to ST1.

Tightening angle:
60°±5°

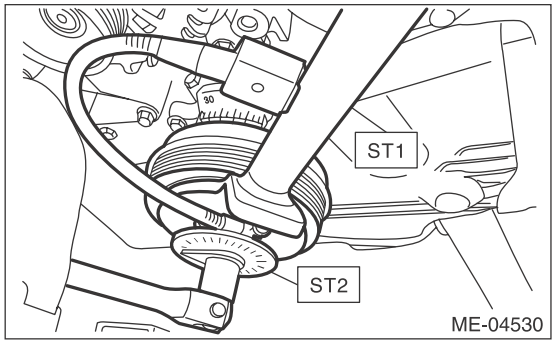

(4) Install the radiator main fan motor assembly and radiator sub motor assembly. <Ref. to CO(H4SO)-24, INSTALLATION, Radiator Main Fan and Fan Motor.> <Ref. to CO(H4SO)-25, INSTALLATION, Radiator Sub Fan and Fan Motor.>

5) Install the V-belts. <Ref. to ME(H4SO)-42, INSTALLATION, V-belt.>

C: INSPECTION

1) Make sure the V belt is not worn or damaged.
2) Check the tension of the front side belt. <Ref. to ME(H4SO)-43, INSPECTION, V-belt.>

14.Timing Belt Cover

A: REMOVAL

NOTE:
When replacing the single part, perform the work with the engine installed to vehicle body.
1) Remove the V-belts. <Ref. to ME(H4SO)-42, REMOVAL, V-belt.>
2) Remove the crank pulley. <Ref. to ME(H4SO)-44, REMOVAL, Crank Pulley.>
3) Remove the stopper rod.

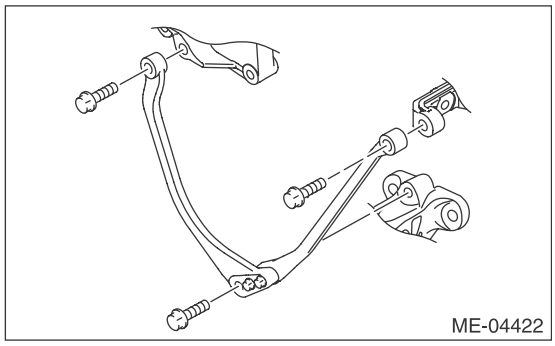

4) Remove the timing belt cover LH (A).
5) Remove the front timing belt cover (B).

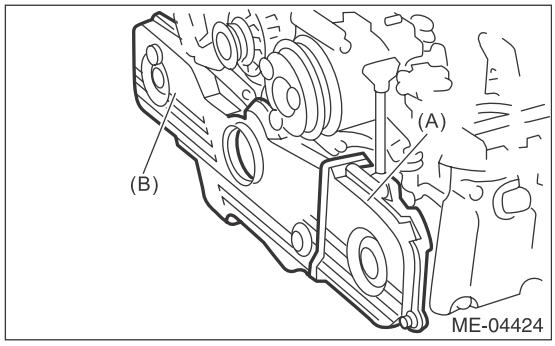

B: INSTALLATION

1) Install the front timing belt cover (B).

Tightening torque:
5 N·m (0.5 kgf-m, 3.7 ft-lb)
2) Install the timing belt cover LH (A).

Tightening torque:
5 N·m (0.5 kgf-m, 3.7 ft-lb)

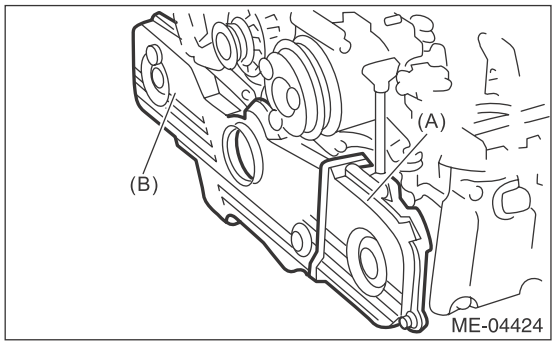

3) Install the stopper rod.

Tightening torque:
36 N·m (3.7 kgf-m, 26.6 ft-lb)

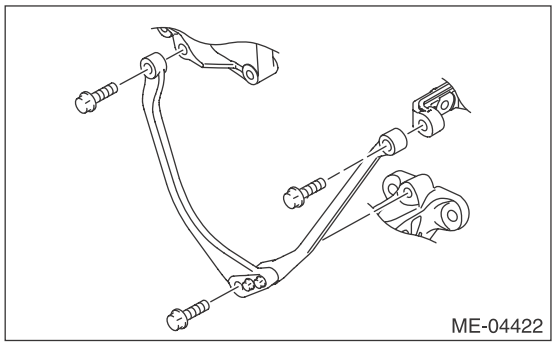

4) Install the crank pulley. <Ref. to ME(H4SO)-44, INSTALLATION, Crank Pulley.>
5) Install the V-belts. <Ref. to ME(H4SO)-42, INSTALLATION, V-belt.>

C: INSPECTION

Check the timing belt cover for damage.

15. Timing Belt

A: REMOVAL

NOTE:
• When replacing the single part, perform the work with the engine installed to vehicle body.
• When performing the work with the engine installed to body, the following parts must also be removed/installed.
  • Radiator main fan motor assembly <Ref. to CO(H4SO)-24, REMOVAL, Radiator Main Fan and Fan Motor.> <Ref. to CO(H4SO)-24, INSTALLATION, Radiator Main Fan and Fan Motor.>
  • Radiator sub fan motor assembly <Ref. to CO(H4SO)-25, REMOVAL, Radiator Sub Fan and Fan Motor.> <Ref. to CO(H4SO)-25, INSTALLATION, Radiator Sub Fan and Fan Motor.>
• When performing the work with the engine installed to body, protect the radiator with cardboards or blankets.

1. TIMING BELT

1) Remove the V-belts. <Ref. to ME(H4SO)-42, REMOVAL, V-belt.>
2) Remove the crank pulley. <Ref. to ME(H4SO)-44, REMOVAL, Crank Pulley.>
3) Remove the timing belt cover. <Ref. to ME(H4SO)-46, REMOVAL, Timing Belt Cover.>
4) Remove the timing belt guide. (MT model)

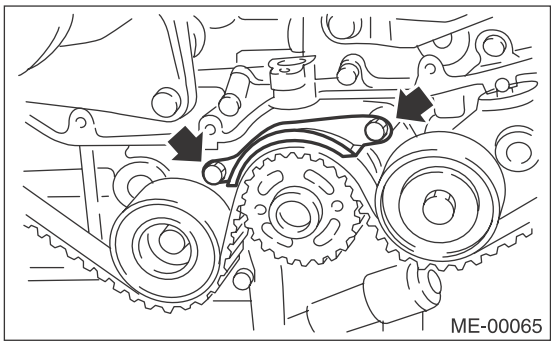

5) If the alignment mark or arrow mark (which indicates the direction of rotation) on timing belt fade away, put new marks before removing the timing belt as shown in procedures below.

(1) Use the ST to turn crankshaft. Align the mark (a) of sprocket to the mark (b) of oil pump, and then ensure the right side cam sprocket mark (c), cam cap and cylinder head matching surface (d) or left side cam sprocket mark (e), timing belt cover notch (f) are properly adjusted.

ST 499987500 CRANKSHAFT SOCKET

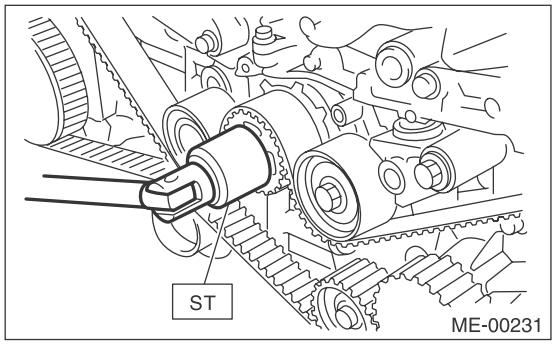

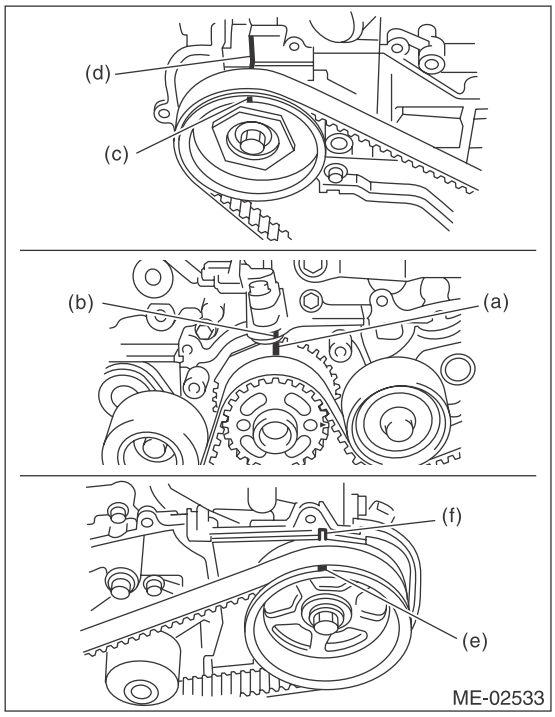

(2) Using white paint, put an alignment mark or an arrow mark on timing belts in relation to the crank sprocket and cam sprockets.

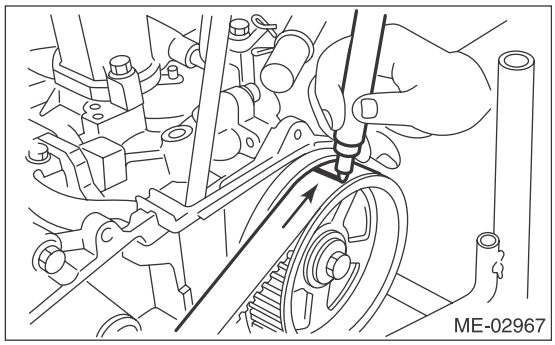

Z_1: 46.8 teeth
Z_2: 43.7 teeth

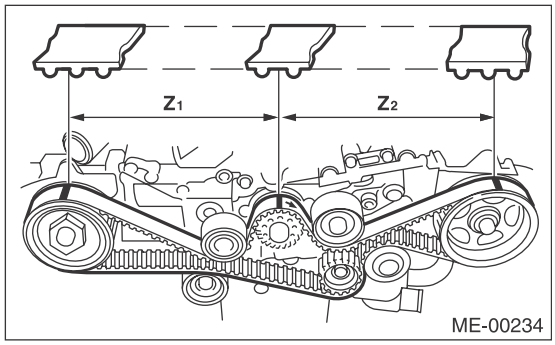

6) Remove the belt idler (A).
7) Remove the belt idler No. 2 (B).

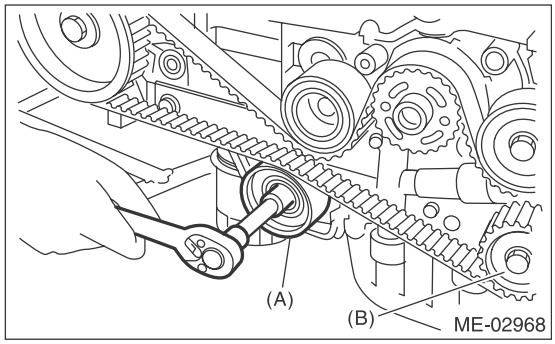

8) Remove the timing belt.

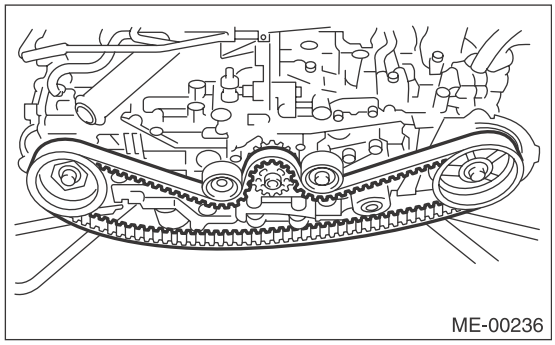

2. BELT IDLER AND AUTOMATIC BELT TENSION ADJUSTER ASSEMBLY

1) Remove the belt idler.

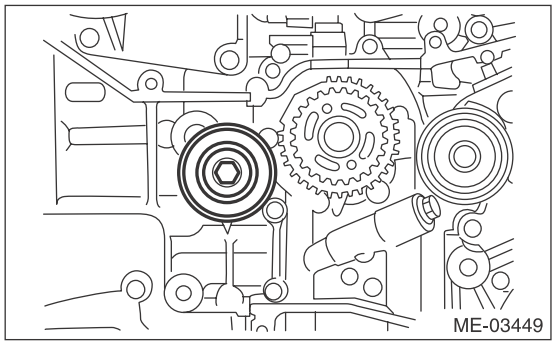

2) Remove the automatic belt tension adjuster assembly.

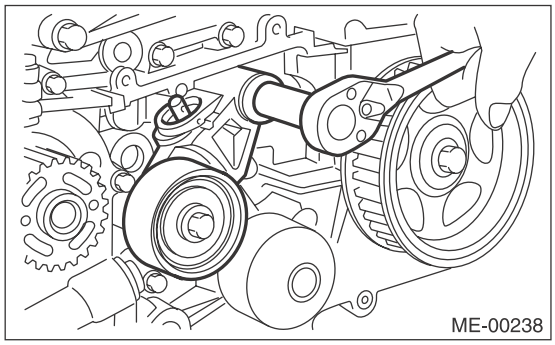

B: INSTALLATION

1. AUTOMATIC BELT TENSION ADJUSTER ASSEMBLY AND BELT IDLER

1) Prepare for installation of the automatic belt tension adjuster assembly.

CAUTION:
- **Always use a vertical type pressing tool to move the adjuster rod down.**
- **Do not use a lateral type vise.**
- **Push the adjuster rod vertically.**
- **Press-in the push adjuster rod gradually taking three minutes or more.**
- **Do not allow press pressure to exceed 9,807 N (1,000 kgf, 2,205 lb).**
- **Push in the adjuster rod to the end face of the cylinder. However, do not push in the adjuster rod below the end face of the cylinder. Doing so may damage the cylinder.**
- **Do not release the press pressure until stopper pin is completely inserted.**

(1) Attach the automatic belt tension adjuster assembly to vertical pressing tool.

(2) Slowly push in the adjuster rod with a pressure of 165 N (16.8 kgf, 37.1 lbf) or more until the adjuster rod is aligned with the stopper pin hole in the cylinder.

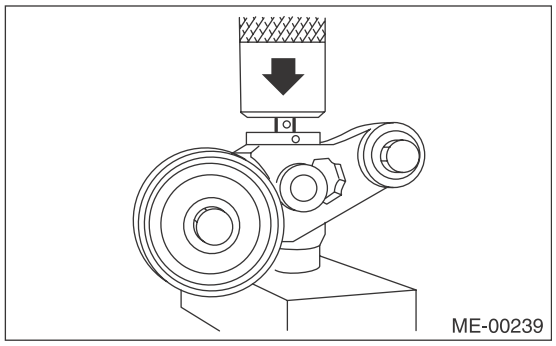

(3) With a 2 mm (0.08 in) dia. stopper pin or a 2 mm (0.08 in) (nominal) dia. hex wrench inserted into the stopper pin hole in cylinder, secure the adjuster rod.

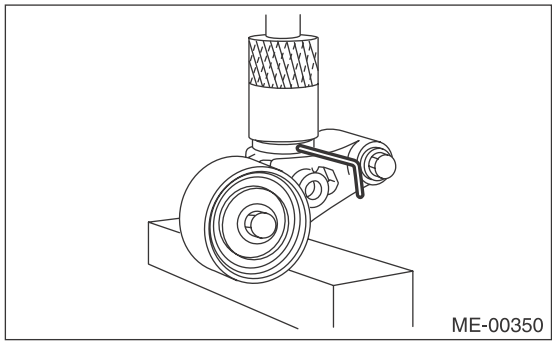

2) Install the automatic belt tension adjuster assembly.

Tightening torque:
39 N·m (4.0 kgf-m, 28.8 ft-lb)

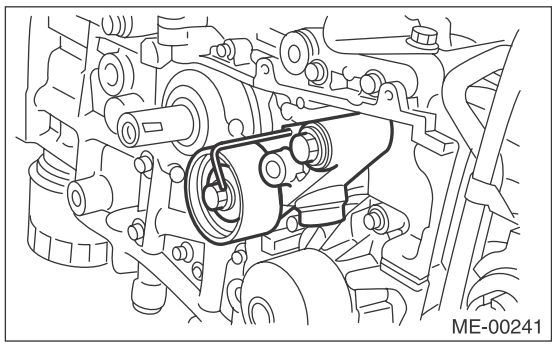

3) Install the belt idlers.

Tightening torque:
39 N·m (4.0 kgf-m, 28.8 ft-lb)

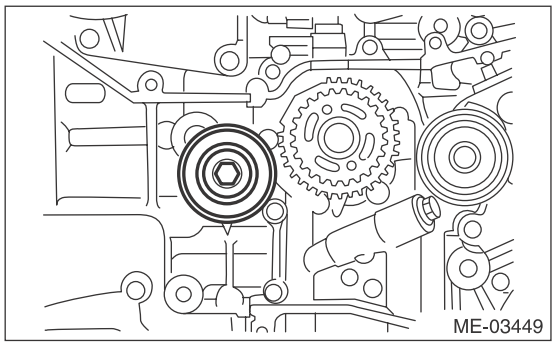

2. TIMING BELT

1) Prepare for installation of the automatic belt tension adjuster assembly. <Ref. to ME(H4SO)-48, AUTOMATIC BELT TENSION ADJUSTER ASSEMBLY AND BELT IDLER, INSTALLATION, Timing Belt.>

2) Align the mark (B) on oil pump with the mark (A) on crank sprocket.

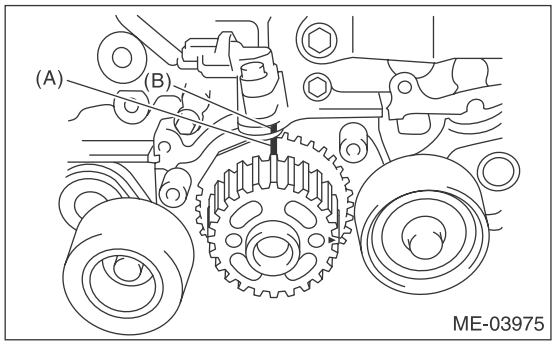

3) Turn the camshaft sprocket No. 2 using ST1, and turn the camshaft sprocket No. 1 using ST2 so that their alignment marks (A) come to top positions.

ST1 18231AA010 CAM SPROCKET WRENCH

NOTE:
CAM SPROCKET WRENCH (499207100) can also be used.

ST2 499207400 CAM SPROCKET WRENCH

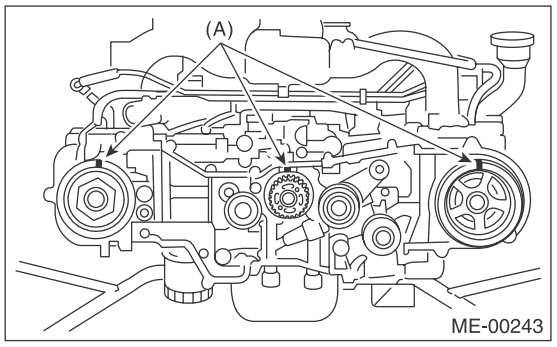

4) While aligning the alignment mark (B) on timing belt with the mark (A) on sprockets, position the timing belt properly.

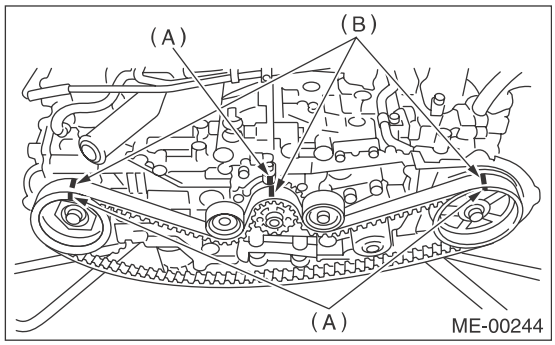

5) Install the belt idler No. 2 (B).

Tightening torque:
39 N·m (4.0 kgf-m, 28.8 ft-lb)

6) Install the belt idler (A).

Tightening torque:
39 N·m (4.0 kgf-m, 28.8 ft-lb)

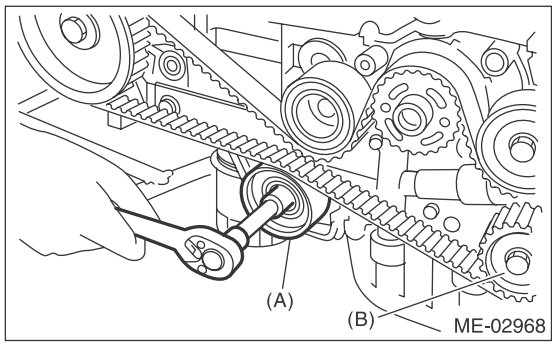

7) After ensuring the marks on timing belt and camshaft sprockets are aligned, remove the stopper pin from belt tension adjuster.

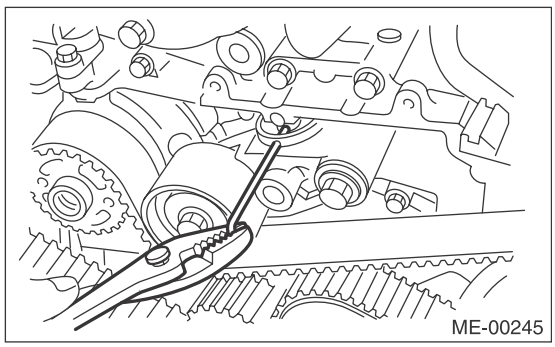

8) Install the timing belt guide. (MT model)

(1) Temporarily tighten the bolts mounting the timing belt guide.

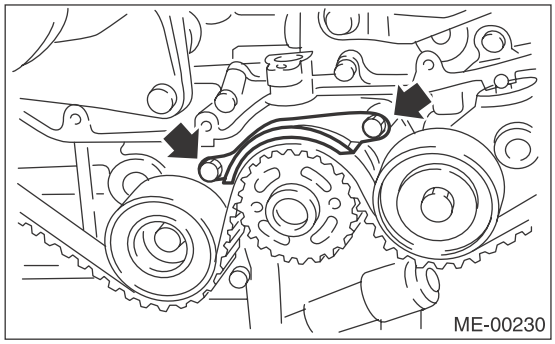

(2) Check and adjust the clearance between timing belt and timing belt guide by using thickness gauge.

Clearance:
1.0±0.5 mm (0.039±0.020 in)

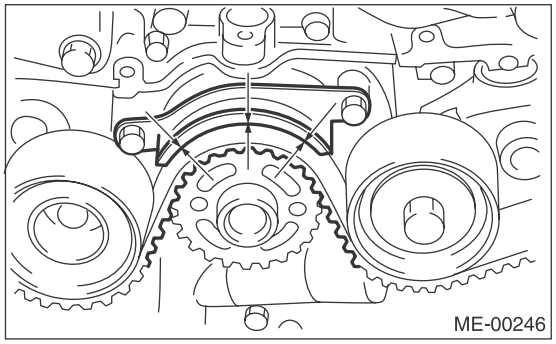

(3) Tighten the bolts mounting the timing belt guide.

Tightening torque:
9.75 N·m (1.0 kgf-m, 7.2 ft-lb)

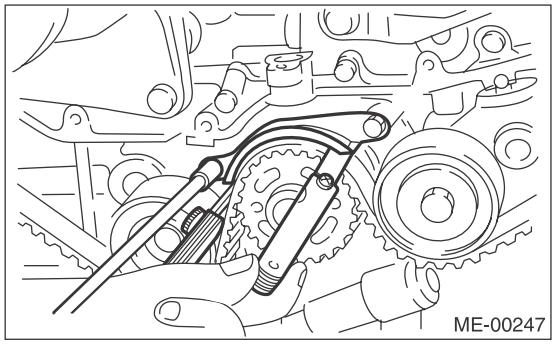

9) Install the timing belt cover. <Ref. to ME(H4SO)-46, INSTALLATION, Timing Belt Cover.>
10) Install the crank pulley. <Ref. to ME(H4SO)-44, INSTALLATION, Crank Pulley.>
11) Install the V-belts. <Ref. to ME(H4SO)-42, INSTALLATION, V-belt.>

C: INSPECTION

1. TIMING BELT

1) Check the timing belt teeth for breaks, cracks or wear. If any fault is found, replace the timing belt.
2) Check the condition on the back surface of the timing belt. If cracks are found, replace the timing belt.

CAUTION:
• Be careful not to let oil, grease or coolant contact the timing belt. Remove quickly and thoroughly if this happens.
• Do not bend the timing belt sharply.

In radial diameter h:
60 mm (2.36 in) or more

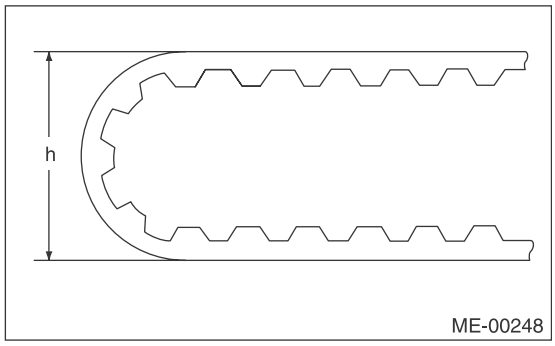

2. AUTOMATIC BELT TENSION ADJUSTER

1) Visually check the oil seals for leaks, and rod ends for abnormal wear and scratches. If necessary, replace the automatic belt tension adjuster assembly.

NOTE:
Slight traces of oil at rod's oil seal does not indicate a problem.
2) Check that the adjuster rod does not move when a pressure of 165 N (16.8 kgf, 37.1 lbf) is applied to it. This is to check adjuster rod stiffness.
3) If the adjuster rod is not stiff and moves freely when applying 165 N (16.8 kgf, 37.1 lb), check it using the following procedures:
(1) Slowly press the adjuster rod down to the end surface of cylinder. Repeat this operation two to three times.
(2) With the adjuster rod moved all the way up, apply a pressure of 165 N (16.8 kgf, 37.1 lb) to it, and check the adjuster rod stiffness.
(3) If the adjuster rod is not stiff and moves down, replace the automatic belt tension adjuster assembly with a new part.

CAUTION:
• Always use a vertical type pressing tool to move the adjuster rod down.
• Do not use a lateral type vise.
• Push the adjuster rod vertically.
• Press the adjuster rod gradually taking three minutes or more.
• Do not allow press pressure to exceed 9,807 N (1,000 kgf, 2,205 lb).
• Push in the adjuster rod to the end face of the cylinder. However, do not press the adjuster rod below the end face of the cylinder. Doing so may damage the cylinder.
4) Measure the amount of adjuster rod protrusion "H" from the end surface of the cylinder. If it is not within specifications, replace the automatic belt tension adjuster assembly with a new part.

Amount of adjuster rod protrusion H:
5.2 — 6.2 mm (0.204 — 0.244 in)

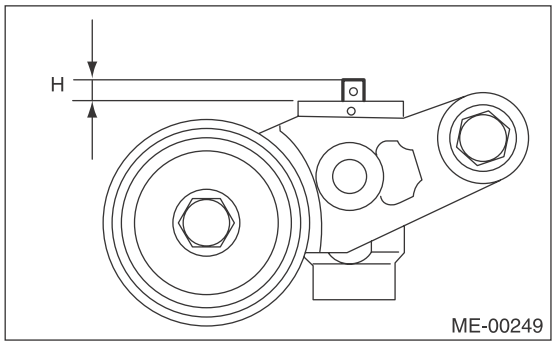

3. BELT TENSION PULLEY

1) Check the mating surfaces of timing belt and contact point of adjuster rod for abnormal wear or scratches. Replace the automatic belt tension adjuster assembly with a new part if faulty.
2) Check the belt tension pulley for smooth rotation. Replace the automatic belt tension adjuster assembly with a new part if abnormal noise or excessive play occurs.
3) Check the belt tension pulley for grease leakage.

4. BELT IDLER

1) Check the belt idler for smooth rotation. Replace if noise or excessive play occurs.
2) Check the outer contacting surfaces of idler pulley for abnormal wear and scratches.
3) Check the belt idler for grease leakage.

16.Cam Sprocket

A: REMOVAL

NOTE:
When replacing the single part, perform the work with the engine installed to vehicle body.
1) Remove the V-belts. <Ref. to ME(H4SO)-42, REMOVAL, V-belt.>
2) Remove the crank pulley. <Ref. to ME(H4SO)-44, REMOVAL, Crank Pulley.>
3) Remove the timing belt cover. <Ref. to ME(H4SO)-46, REMOVAL, Timing Belt Cover.>
4) Remove the timing belt. <Ref. to ME(H4SO)-47, REMOVAL, Timing Belt.>
5) Remove the camshaft position sensor. <Ref. to FU(H4SO)-24, REMOVAL, Camshaft Position Sensor.>
6) Use the ST to lock the cam sprocket, and remove the cam sprocket bolt.
ST 18231AA010 CAM SPROCKET WRENCH

NOTE:
CAM SPROCKET WRENCH (499207100) can also be used.

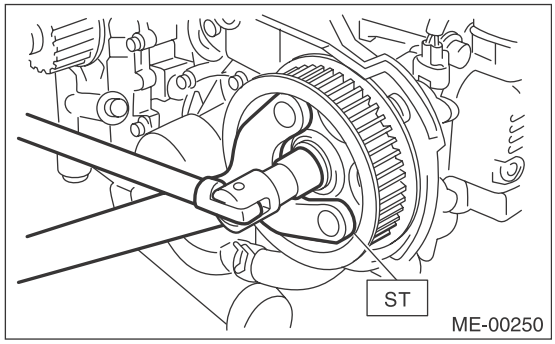

ST 499207400 CAM SPROCKET WRENCH

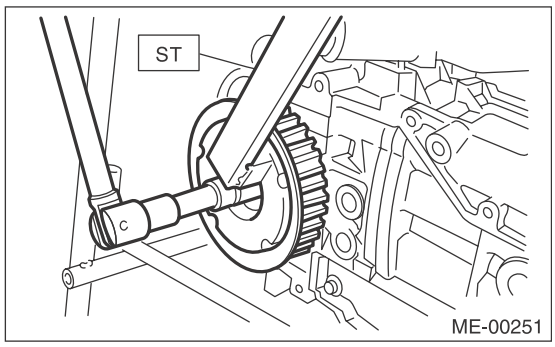

7) Remove the cam sprocket.

B: INSTALLATION

1) Install the cam sprocket.
2) Use the ST to lock the cam sprocket, and install the cam sprocket bolt.

NOTE:
• Do not confuse cam sprockets (LH) and (RH) during installation.
• They can be distinguished by the L or R indication.
ST 18231AA010 CAM SPROCKET WRENCH

NOTE:
CAM SPROCKET WRENCH (499207100) can also be used.

Tightening torque:
78 N·m (8.0 kgf-m, 57.5 ft-lb)

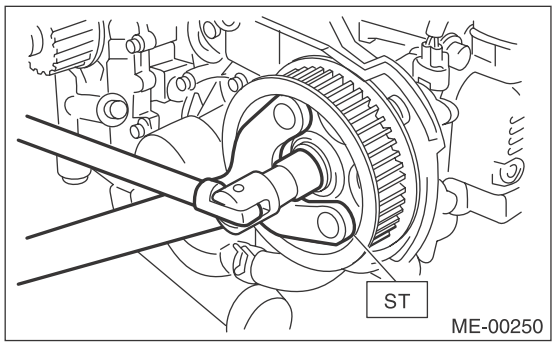

ST 499207400 CAM SPROCKET WRENCH

Tightening torque:
78 N·m (8.0 kgf-m, 57.5 ft-lb)

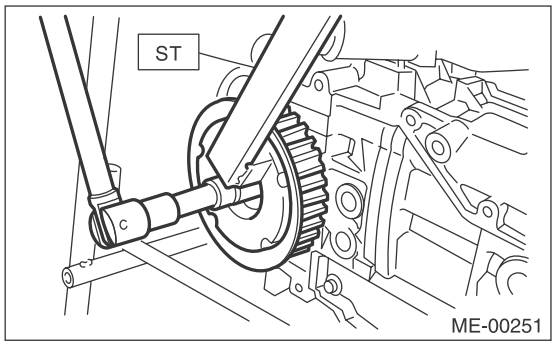

3) Install the camshaft position sensor. <Ref. to FU(H4SO)-24, INSTALLATION, Camshaft Position Sensor.>
4) Install the timing belt. <Ref. to ME(H4SO)-48, INSTALLATION, Timing Belt.>
5) Install the timing belt cover. <Ref. to ME(H4SO)-46, INSTALLATION, Timing Belt Cover.>
6) Install the crank pulley. <Ref. to ME(H4SO)-44, INSTALLATION, Crank Pulley.>
7) Install the V-belts. <Ref. to ME(H4SO)-42, INSTALLATION, V-belt.>

C: INSPECTION

1) Check the cam sprocket teeth for abnormal wear and scratches.
2) Make sure there is no free play between cam sprocket and key.
3) Check the cam sprocket protrusion used for sensor for damage and contamination of foreign matter.

17.Crank Sprocket

A: REMOVAL

NOTE:
When replacing the single part, perform the work with the engine installed to vehicle body.
1) Remove the V-belts. <Ref. to ME(H4SO)-42, REMOVAL, V-belt.>
2) Remove the crank pulley. <Ref. to ME(H4SO)-44, REMOVAL, Crank Pulley.>
3) Remove the timing belt cover. <Ref. to ME(H4SO)-46, REMOVAL, Timing Belt Cover.>
4) Remove the timing belt. <Ref. to ME(H4SO)-47, REMOVAL, Timing Belt.>
5) Remove the crank sprocket.

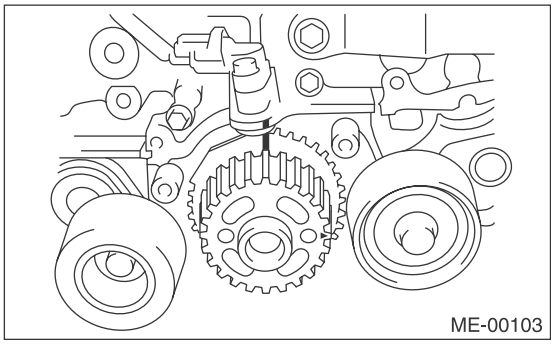

B: INSTALLATION

1) Install the crank sprocket.

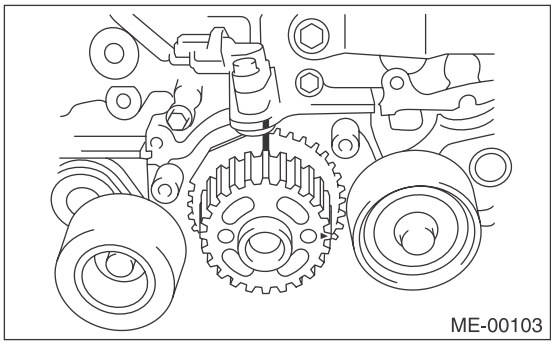

2) Install the timing belt. <Ref. to ME(H4SO)-48, INSTALLATION, Timing Belt.>
3) Install the timing belt cover. <Ref. to ME(H4SO)-46, INSTALLATION, Timing Belt Cover.>
4) Install the crank pulley. <Ref. to ME(H4SO)-44, INSTALLATION, Crank Pulley.>
5) Install the V-belts. <Ref. to ME(H4SO)-42, INSTALLATION, V-belt.>

C: INSPECTION

1) Check the crank sprocket teeth for abnormal wear and scratches.
2) Make sure there is no free play between crank sprocket and key.
3) Check the crank sprocket protrusion used for sensor for damage and contamination of foreign matter.

18.Valve Rocker Assembly

A: REMOVAL

NOTE:
When replacing the single part, perform the work with the engine installed to vehicle body. Refer to "Valve Clearance" for preparation procedures. <Ref. to ME(H4SO)-29, Valve Clearance.>
1) Remove the ignition coil. <Ref. to IG(H4SO)-5, REMOVAL, Ignition Coil.>
2) Disconnect the PCV hose and remove the rocker cover.
3) Remove the valve rocker assembly.
(1) Use the ST to rotate the spring stopper in the direction of the arrow to remove it from adjuster pin.
ST 18258AA000 SPRING INSTALLER

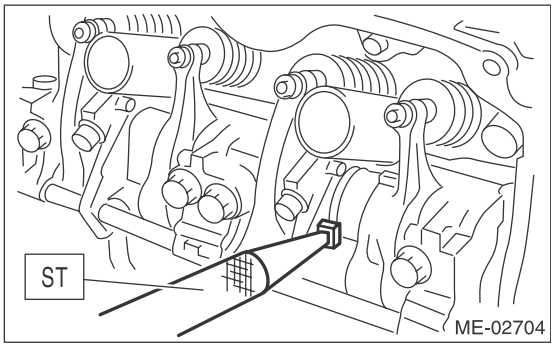

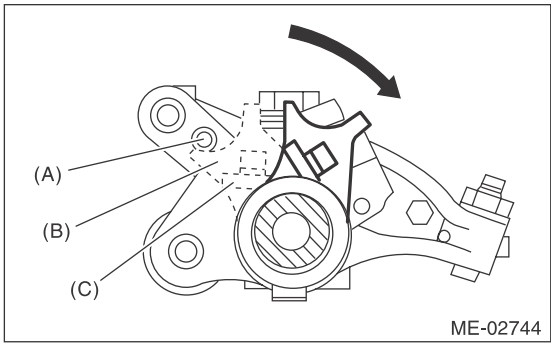

(A) Adjuster pin
(B) Spring stopper
(C) Spring

(2) Remove the bolts (a) through (j) in alphabetical sequence.

NOTE:
Leave two or three threads of bolts (i) and (j) engaged in order to retain the valve rocker assembly.

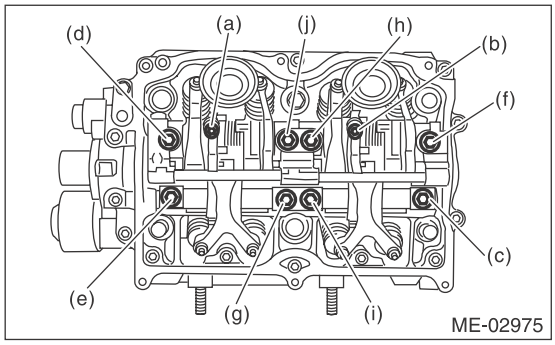

(3) Remove the valve rocker assembly.

NOTE:
Set the ST in the position shown in the drawing to remove the intake valve rocker assembly.
ST 18354AA000 VALVE ROCKER HOLDER

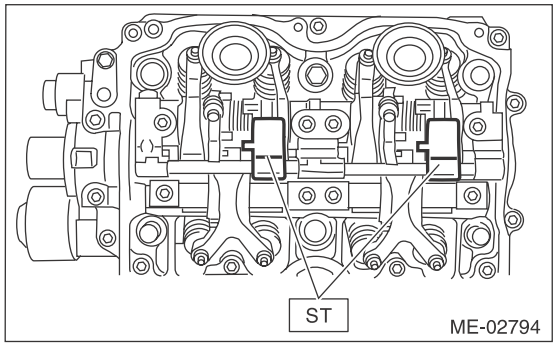

B: INSTALLATION

1) Install the valve rocker assembly.
(1) Temporarily tighten the bolts equally in alphabetical order as shown in the figure.

NOTE:
- Do not temporarily tighten the bolts (i) and (j).
- Set the ST in the position shown in the drawing to mount the intake valve rocker assembly.

ST 18354AA000 VALVE ROCKER HOLDER

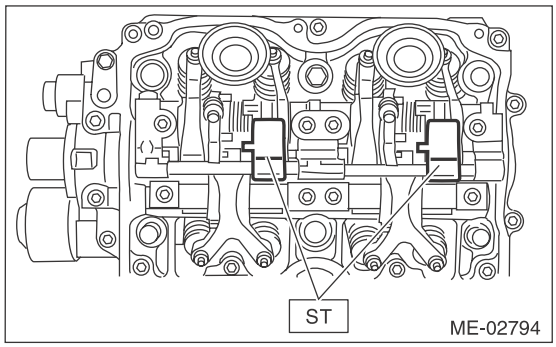

(2) Tighten the bolts (a) through (h) to specified torque.

Tightening torque:
25 N·m (2.5 kgf-m, 18.4 ft-lb)

(3) Tighten the bolts (i) through (j) to specified torque.

Tightening torque:
6 N·m (0.6 kgf-m, 4.4 ft-lb)

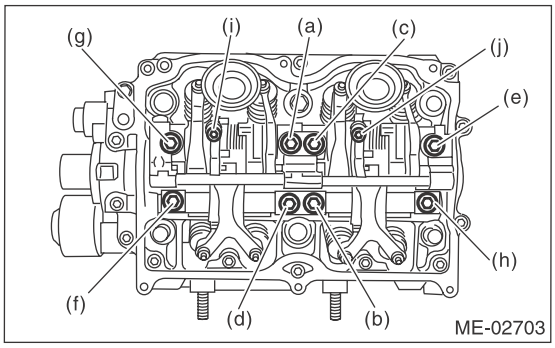

(4) Use the ST to rotate the spring stopper in the direction of the arrow to fasten the adjuster pin.

ST 18258AA000 SPRING INSTALLER

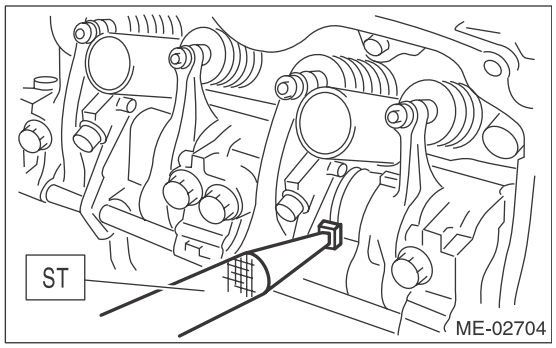

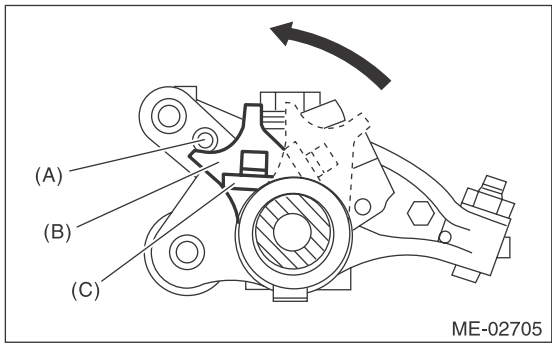

(A) Adjuster pin
(B) Spring stopper
(C) Spring

2) Remove the timing belt cover LH.
3) Adjust the valve clearance. <Ref. to ME(H4SO)-30, ADJUSTMENT, Valve Clearance.>
4) Install the timing belt cover LH.

Tightening torque:
5 N·m (0.5 kgf-m, 3.7 ft-lb)

5) Install the rocker cover.
(1) Install the rocker cover gasket to the rocker cover.

NOTE:
Use a new rocker cover gasket.

(2) Temporarily tighten the bolts in alphabetical order shown in the figure, tighten them in two stages.

Tightening torque:
1st
6.4 N·m (0.7 kgf-m, 4.7 ft-lb)
2nd (only (a) and (b) are tightened)
6.4 N·m (0.7 kgf-m, 4.7 ft-lb)

RH side

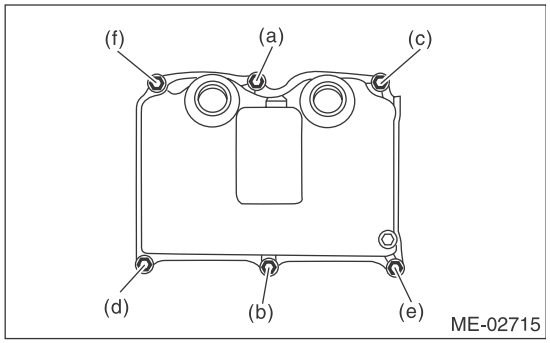

LH side

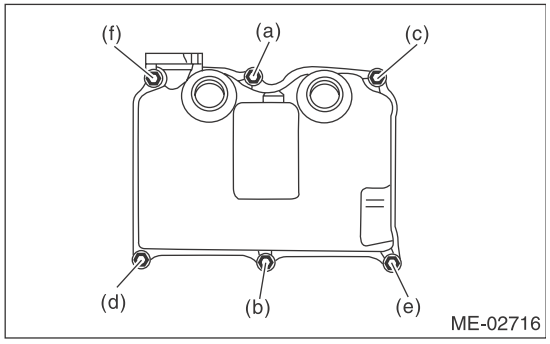

(3) Connect the PCV hose.

6) Install the ignition coil. <Ref. to IG(H4SO)-5, INSTALLATION, Ignition Coil.>

C: DISASSEMBLY

NOTE:
Intake valve rocker assembly cannot be disassembled.

1) Remove the exhaust valve rocker arm from the rocker shaft.

NOTE:
Keep all the removed parts in order for re-installing in their original positions.

2) Remove the nut and adjusting screw from exhaust valve rocker.

D: ASSEMBLY

NOTE:
Intake valve rocker assembly cannot be disassembled.
1) Install the adjusting screw and nut to the exhaust valve rocker.
2) Insert the exhaust valve rocker arm to rocker shaft.

NOTE:
Valve rocker arms, and rocker shaft have identification marks. Make sure the parts with same markings are properly assembled.

E: INSPECTION

1. INTAKE VALVE ROCKER ASSEMBLY

1) If the roller or valve contact surface of valve rocker arm is worn or dented excessively, replace the valve rocker assembly.
2) Check that the valve rocker arm roller rotates smoothly. If not, replace the valve rocker assembly.

2. EXHAUST VALVE ROCKER ASSEMBLY

1) Measure the inner diameter of valve rocker arm and outer diameter of valve rocker shaft, and confirm the difference (oil clearance) between the two values.

Clearance between arm and shaft:
Standard
0.020 — 0.054 mm (0.0008 — 0.0021 in)

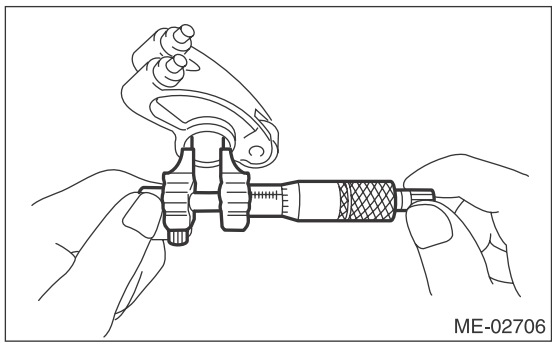
ME-02706

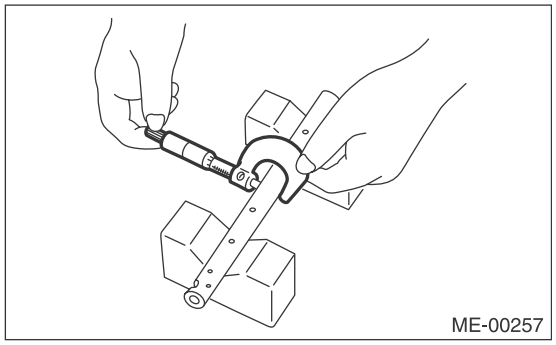
ME-00257

2) If the oil clearance exceeds the limit, replace the valve rocker arm or shaft, whichever shows the greater amount of wear.

Rocker arm inside diameter:
22.020 — 22.041 mm (0.8669 — 0.8678 in)

Rocker shaft diameter:
21.987 — 22.000 mm (0.8656 — 0.8661 in)

3) If the roller or valve contact surface of valve rocker arm is worn or dented excessively, replace the valve rocker arm.
4) Check that the valve rocker arm roller rotates smoothly. If not, replace the valve rocker arm.

19.Camshaft

A: REMOVAL

NOTE:
When replacing the single part, perform the work with the engine installed to vehicle body. Refer to “Valve Clearance” for preparation procedures. <Ref. to ME(H4SO)-29, Valve Clearance.>
1) Remove the V-belts. <Ref. to ME(H4SO)-42, REMOVAL, V-belt.>
2) Remove the crank pulley. <Ref. to ME(H4SO)-44, REMOVAL, Crank Pulley.>
3) Remove the timing belt cover. <Ref. to ME(H4SO)-46, REMOVAL, Timing Belt Cover.>
4) Remove the timing belt. <Ref. to ME(H4SO)-47, REMOVAL, Timing Belt.>
5) Remove the cam sprocket. <Ref. to ME(H4SO)-52, REMOVAL, Cam Sprocket.>
6) Remove the timing belt cover No. 2 LH.
7) Remove the timing belt cover No. 2 RH.

NOTE:
Do not damage or lose the seal rubber when removing the timing belt covers.

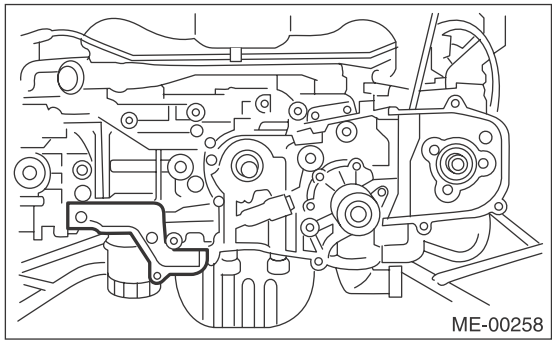
ME-00258

8) Remove the tensioner bracket.

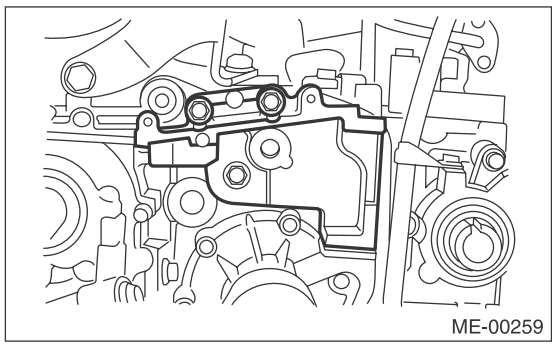
ME-00259

9) Remove the camshaft position sensor support. (LH side only)
10) Remove the valve rocker assembly. <Ref. to ME(H4SO)-54, REMOVAL, Valve Rocker Assembly.>
11) Remove the camshaft cap.
(1) Remove the bolts (a) and (b) in alphabetical sequence.

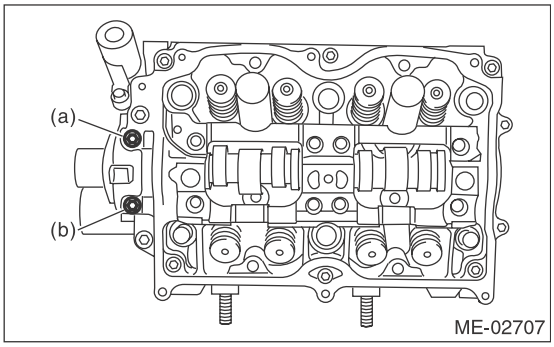

ME-02707

(2) Equally loosen the bolts (c) through (j) all the way in alphabetical sequence.

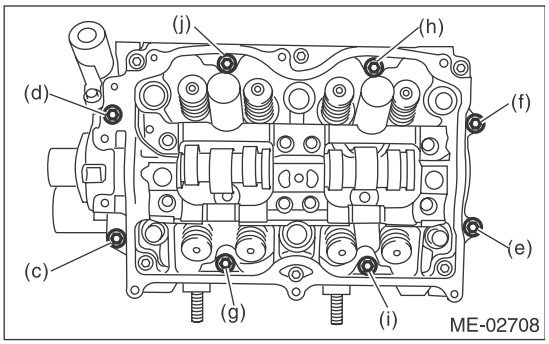

ME-02708

(3) Remove the bolts (k) through (p) in alphabetical sequence using ST.
ST 499497000 TORX® PLUS

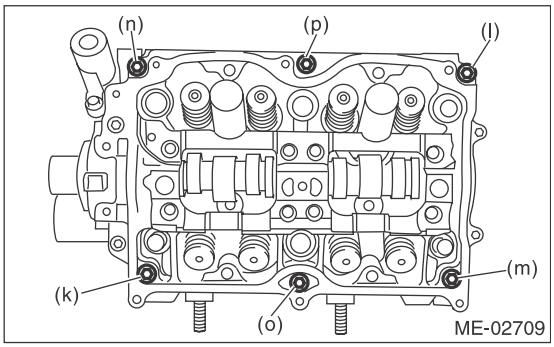

ME-02709

(4) Remove the camshaft cap.
12) Remove the camshaft.
13) Remove the oil seal.
14) Remove the plug from rear side of camshaft.

CAUTION:
Do not scratch the journal surface when removing the oil seal.
15) Similarly, remove the camshaft RH and related parts.

B: INSTALLATION

1) Apply a thin coat of engine oil to camshaft journals, and install the camshaft.
2) Install the camshaft cap.
(1) Apply liquid gasket to the mating surfaces of camshaft cap.

NOTE:
Install within 5 min. after applying liquid gasket.

Liquid gasket:
THREE BOND 1217G (Part No. K0877Y0100) or equivalent

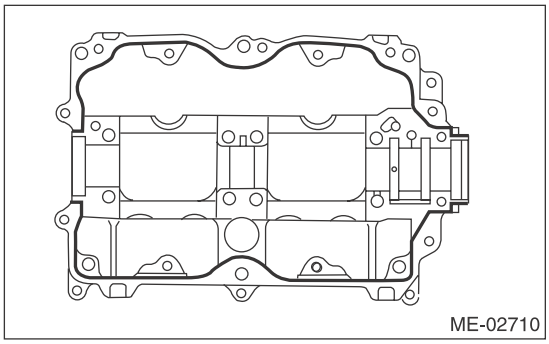

NOTE:
Apply a coat of liquid gasket of 3 mm (0.12 in) in diameter (A) along the edge (B) of camshaft cap (C) mating surface.

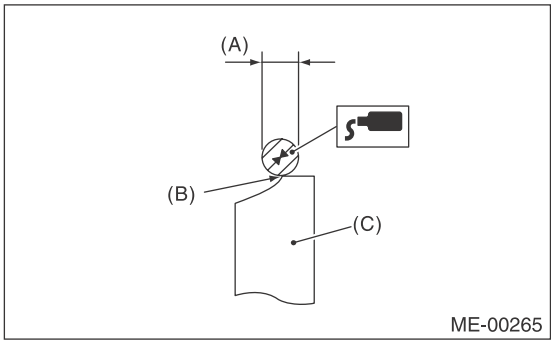

(2) Temporarily tighten the bolts (a) through (d) in alphabetical sequence.

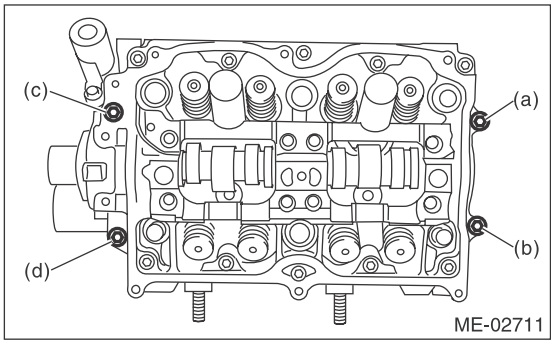

(3) Install the valve rocker assembly. <Ref. to ME(H4SO)-54, INSTALLATION, Valve Rocker Assembly.>

(4) Tighten the TORX® bolts (e) through (j) in alphabetical sequence using the ST.
ST 499497000 TORX® PLUS

Tightening torque:
18 N·m (1.8 kgf-m, 13.3 ft-lb)

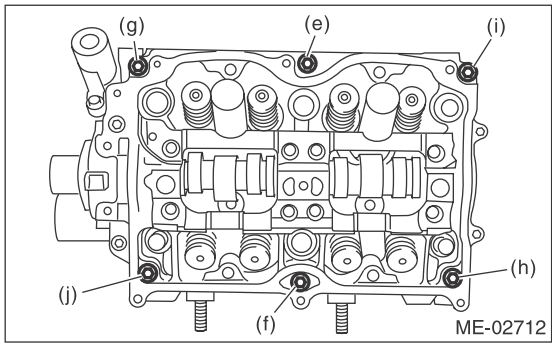

(5) Tighten the bolts (k) through (r) in alphabetical sequence.

Tightening torque:
9.75 N·m (1.0 kgf-m, 7.2 ft-lb)

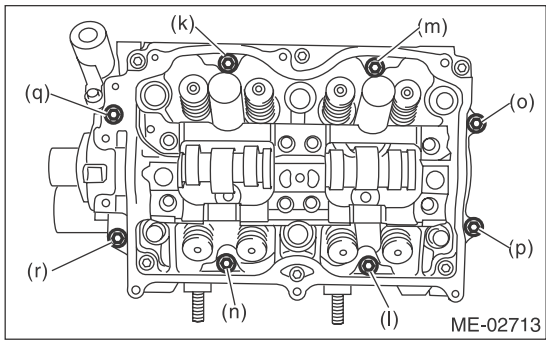

(6) Tighten the bolts (s) and (t) in alphabetical sequence.

NOTE:
- Use a new seal washer.
- Install and tighten the seal washer to the bolt.

Tightening torque:
9.75 N·m (1.0 kgf-m, 7.2 ft-lb)

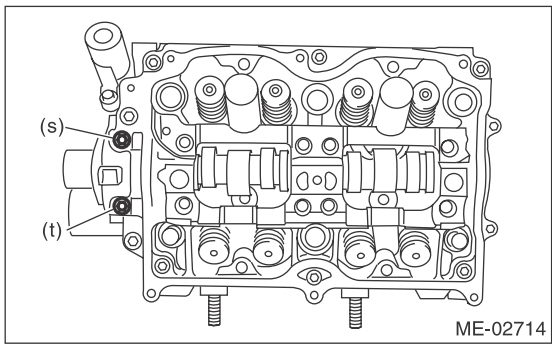

3) Apply a coat of engine oil to camshaft oil seal periphery and oil seal lips and install the oil seal (A) on camshaft using ST1 and ST2.

NOTE:
Use a new oil seal.
ST1 499597000 OIL SEAL GUIDE
ST2 499587500 OIL SEAL INSTALLER

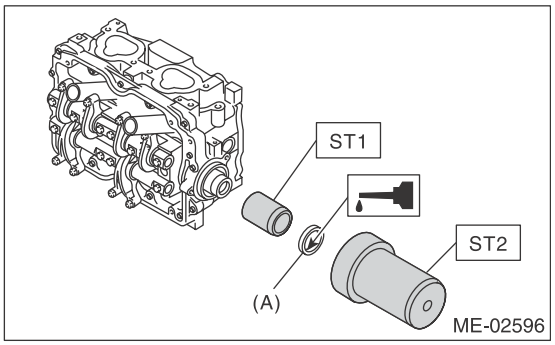

4) Apply a coat of engine oil to plug periphery and install the plug (A) using ST.
ST 499587700 CAMSHAFT OIL SEAL INSTALLER

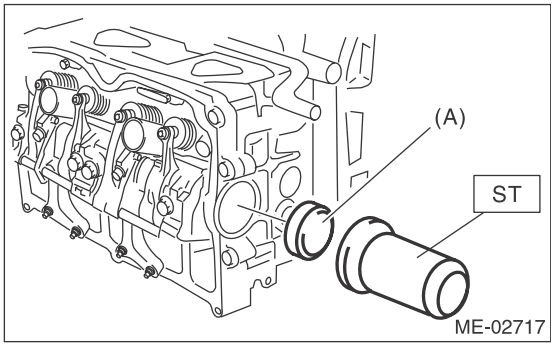

5) Install the camshaft position sensor support. (LH side only)

Tightening torque:
6.4 N·m (0.7 kgf-m, 4.7 ft-lb)

6) Similarly, install the parts on right-hand side.
7) Install the tensioner bracket.

Tightening torque:
24.5 N·m (2.5 kgf-m, 18.1 ft-lb)

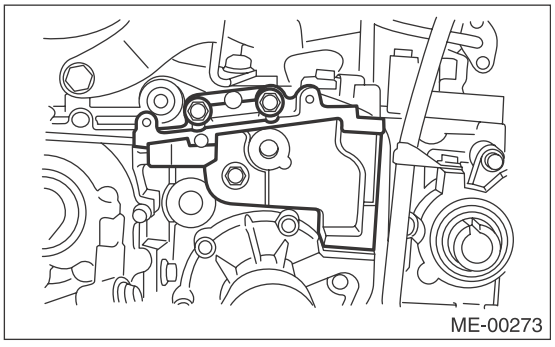

8) Install the timing belt cover No. 2 RH.

Tightening torque:
5 N·m (0.5 kgf-m, 3.7 ft-lb)

9) Install the timing belt cover No. 2 LH.

Tightening torque:
5 N·m (0.5 kgf-m, 3.7 ft-lb)

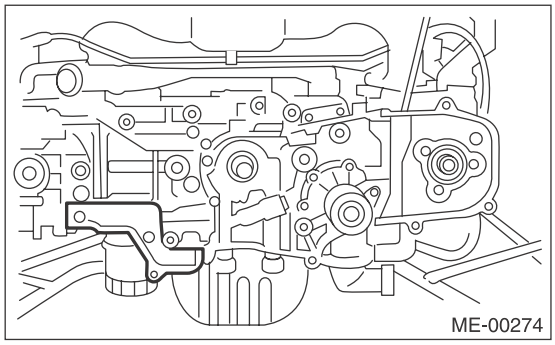

10) Install the cam sprocket. <Ref. to ME(H4SO)-52, INSTALLATION, Cam Sprocket.>
11) Install the timing belt. <Ref. to ME(H4SO)-48, INSTALLATION, Timing Belt.>
12) Adjust the valve clearance. <Ref. to ME(H4SO)-30, ADJUSTMENT, Valve Clearance.>
13) Install the rocker cover.
(1) Install the rocker cover gasket to the rocker cover.

NOTE:
Use a new rocker cover gasket.

(2) Temporarily tighten the bolts in alphabetical order shown in the figure, tighten them in two stages.

Tightening torque:
1st
6.4 N·m (0.7 kgf-m, 4.7 ft-lb)
2nd (only (a) and (b) are tightened)
6.4 N·m (0.7 kgf-m, 4.7 ft-lb)

RH side

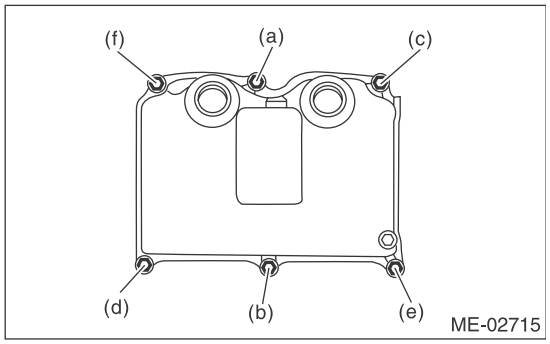

LH side

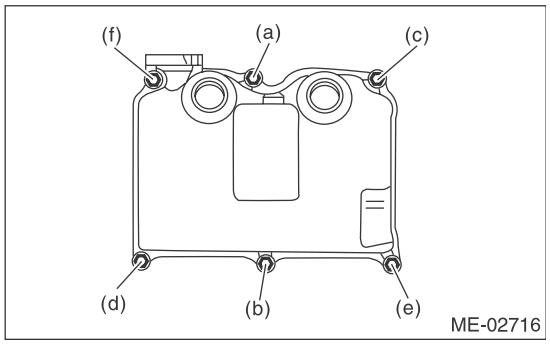

(3) Connect the PCV hose.
14) Install the ignition coil. <Ref. to IG(H4SO)-5, INSTALLATION, Ignition Coil.>
15) Install the timing belt cover. <Ref. to ME(H4SO)-46, INSTALLATION, Timing Belt Cover.>
16) Install the crank pulley. <Ref. to ME(H4SO)-44, INSTALLATION, Crank Pulley.>
17) Install the V-belts. <Ref. to ME(H4SO)-42, INSTALLATION, V-belt.>

C: INSPECTION

1) Measure the bend, and repair or replace if necessary.

Camshaft bend limit:
0.025 mm (0.00098 in)

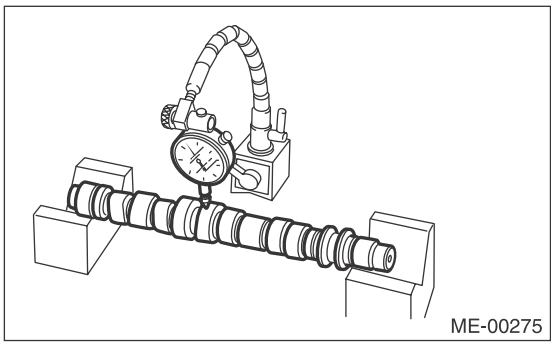

2) Check the journal for damage and wear. Replace if faulty.
3) Check the cam face condition, and remove the minor faults by grinding with oil stone. Replace if there is uneven wear, etc.
4) Measure the Cam height “H”, Cam base circle diameter “A”, and base circle step of adjacent intake cams (low speed and high speed). If it exceeds the standard or offset wear occurs, replace it.

Cam lobe height H:

			Unit: mm (in)
Intake	Constant	Standard	40.075 — 40.175 (1.5778 — 1.5817)
	Low speed	Standard	35.496 — 35.596 (1.3975 — 1.4014)
	High speed	Standard	40.315 — 40.415 (1.5872 — 1.5911)
Exhaust		Standard	39.289 — 39.389 (1.5468 — 1.5507)

Cam base circle diameter A:
Standard
34.00 mm (1.3386 in)

Base circle step of adjacent intake cams (low speed and high speed):
Standard
0.03 mm (0.001 in) or less

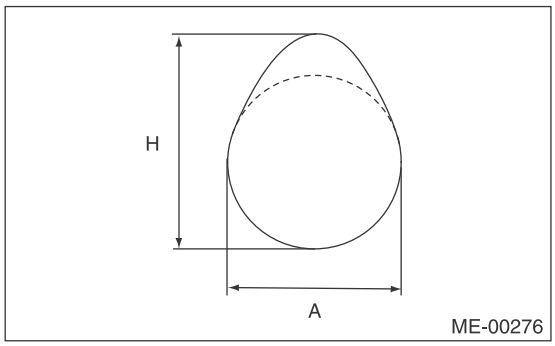

5) Measure the outer diameter of camshaft journal and inner diameter of cylinder head journal, and confirm the difference (oil clearance) between the two values. If the oil clearance is not within the standard, replace the camshaft or cylinder head as necessary.

		Unit: mm (in)
Oil clearance	Standard	0.055 — 0.090 (0.0022 — 0.0035)
Camshaft journal O.D.	Standard	31.928 — 31.945 (1.2570 — 1.2577)
Cylinder head journal inner diameter	Standard	32.000 — 32.018 (1.2598 — 1.2605)

6) Measure the thrust clearance of camshaft with the dial gauge set at end of camshaft. If the thrust clearance is not within the standard or there is offset wear, replace the camshaft caps and cylinder head as a set. If necessary, replace the camshaft.

Camshaft thrust clearance:
Standard
0.030 — 0.090 mm (0.0012 — 0.0035 in)

20.Cylinder Head

A: REMOVAL

NOTE:
• When replacing the single part, perform the work with the engine installed to vehicle body. Refer to "Valve Clearance" for preparation procedures. <Ref. to ME(H4SO)-29, Valve Clearance.>
• When performing the work with the engine installed to body, the following parts must also be removed/installed.
Front exhaust pipe <Ref. to EX(H4SO)-4, REMOVAL, Front Exhaust Pipe.> <Ref. to EX(H4SO)-5, INSTALLATION, Front Exhaust Pipe.>

1) Remove the V-belts. <Ref. to ME(H4SO)-42, REMOVAL, V-belt.>
2) Remove the intake manifold. <Ref. to FU(H4SO)-16, REMOVAL, Intake Manifold.>
3) Remove the crank pulley. <Ref. to ME(H4SO)-44, REMOVAL, Crank Pulley.>
4) Remove the timing belt cover. <Ref. to ME(H4SO)-46, REMOVAL, Timing Belt Cover.>
5) Remove the timing belt. <Ref. to ME(H4SO)-47, REMOVAL, Timing Belt.>
6) Remove the cam sprocket. <Ref. to ME(H4SO)-52, REMOVAL, Cam Sprocket.>
7) Remove the bolt which holds A/C compressor bracket onto cylinder head.
8) Remove the valve rocker assembly. <Ref. to ME(H4SO)-54, REMOVAL, Valve Rocker Assembly.>
9) Remove the camshaft. <Ref. to ME(H4SO)-57, REMOVAL, Camshaft.>
10) Remove the oil level gauge guide. (LH side)
11) Remove the cylinder head bolts in alphabetical sequence as shown in the figure.

NOTE:
Leave bolts (a) and (c) engaged by three or four threads to prevent the cylinder head from falling.

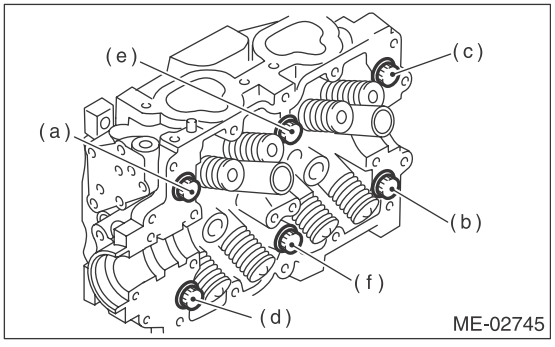

12) While tapping the cylinder head with a plastic hammer, separate it from cylinder block. Remove the bolts (a) and (c) to remove cylinder head.

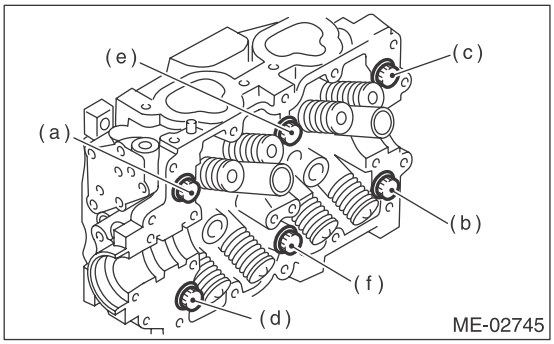

13) Remove the cylinder head gasket.

CAUTION:
Be careful not to scratch the mating surface of cylinder head and cylinder block.

14) Similarly, remove the right side cylinder head.

B: INSTALLATION

1) Install the cylinder head to the cylinder block.

CAUTION:
Be careful not to scratch the mating surface of cylinder head and cylinder block.

NOTE:
Use a new cylinder head gasket.

(1) Clean the bolt threads and the bolt holes in the cylinder block.

CAUTION:
To avoid erroneous tightening of the bolts, clean out the bolt holes sufficiently by blowing with compressed air to eliminate engine coolant etc.

(2) Apply a sufficient coat of engine oil to the washer and bolt thread.
(3) Tighten all bolts to 40 N·m (4.1 kgf-m, 29.5 ft-lb) in alphabetical order.
(4) Retighten all bolts to 95 N·m (9.7 kgf-m, 70.1 ft-lb) in alphabetical order.

CAUTION:
If the bolt makes stick-slip sound during tightening, repeat the procedure from step (1). In this case, the cylinder head gasket can be reused.

(5) Loosen all the bolts by 180° in the reverse order of installing, and loosen them further by 180°.
(6) Tighten all bolts to 10 N·m (1.0 kgf-m, 7.4 ft-lb) in alphabetical order.
(7) Retighten all bolts to 30 N·m (3.1 kgf-m, 22.1 ft-lb) in alphabetical order.
(8) Retighten all bolts to 60 N·m (6.1 kgf-m, 44.3 ft-lb) in alphabetical order.

(9) Retighten all bolts by 80 — 90° in alphabetical order.
(10) Retighten all bolts by 40 — 45° in alphabetical order.

CAUTION:
The tightening angle of the bolt should not exceed 45°.

(11) Retighten bolts (a) and (b) by 40 — 45°.

CAUTION:
Make sure the total "tightening angle" of steps (10) and (11) does not exceed 90°.

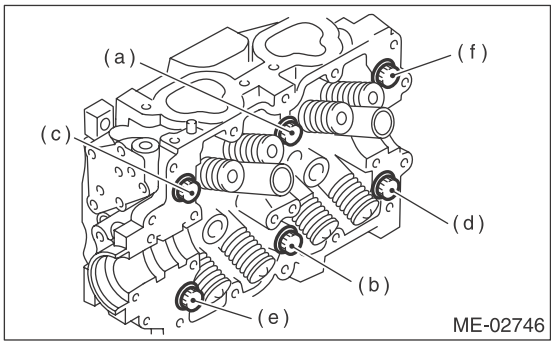

2) Install the oil level gauge guide. (LH side)

Tightening torque:
6.4 N·m (0.7 kgf-m, 4.7 ft-lb)

3) Install the camshaft. <Ref. to ME(H4SO)-58, INSTALLATION, Camshaft.>
4) Install the valve rocker assembly. <Ref. to ME(H4SO)-54, INSTALLATION, Valve Rocker Assembly.>
5) Install the A/C compressor bracket on cylinder head.

Tightening torque:
36 N·m (3.7 kgf-m, 26.6 ft-lb)

6) Install the cam sprocket. <Ref. to ME(H4SO)-52, INSTALLATION, Cam Sprocket.>
7) Install the timing belt. <Ref. to ME(H4SO)-48, INSTALLATION, Timing Belt.>
8) Adjust the valve clearance. <Ref. to ME(H4SO)-30, ADJUSTMENT, Valve Clearance.>
9) Install the rocker cover.
(1) Install the rocker cover gasket to the rocker cover.

NOTE:
Use a new rocker cover gasket.

(2) Temporarily tighten the bolts in alphabetical order shown in the figure, tighten them in two stages.

Tightening torque:
1st
6.4 N·m (0.7 kgf-m, 4.7 ft-lb)
2nd (only (a) and (b) are tightened)
6.4 N·m (0.7 kgf-m, 4.7 ft-lb)

RH side

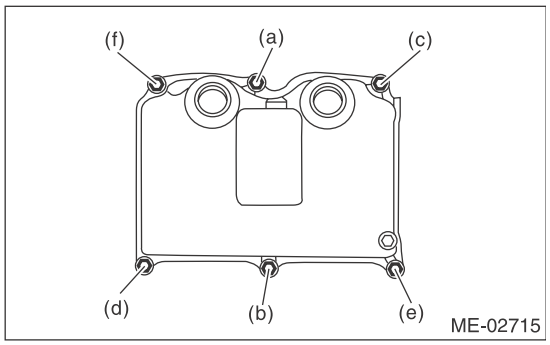

LH side

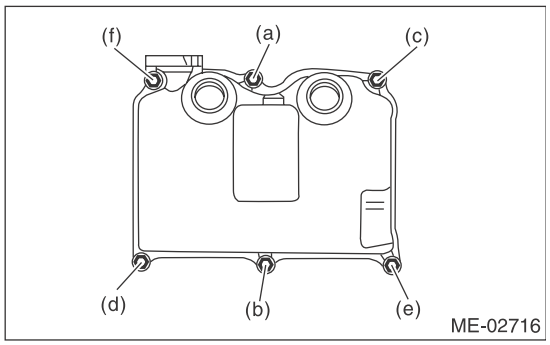

10) Install the timing belt cover. <Ref. to ME(H4SO)-46, INSTALLATION, Timing Belt Cover.>
11) Install the crank pulley. <Ref. to ME(H4SO)-44, INSTALLATION, Crank Pulley.>
12) Install the intake manifold. <Ref. to FU(H4SO)-19, INSTALLATION, Intake Manifold.>
13) Install the V-belts. <Ref. to ME(H4SO)-42, INSTALLATION, V-belt.>

C: DISASSEMBLY

1) Place the cylinder head on the ST.
ST 498267800 CYLINDER HEAD TABLE
2) Compress the valve spring and remove the valve spring retainer key using ST. Remove each valve and valve spring.
ST 499718000 VALVE SPRING REMOVER

NOTE:
- Keep all the removed parts in order for re-installing in their original positions.
- Mark each valve to prevent confusion.
- Pay careful attention not to damage the lips of intake valve oil seals and exhaust valve oil seals.
- For removal and installation procedures of the valve guide, intake valve oil seal and exhaust valve oil seal, refer to “INSPECTION”. <Ref. to ME(H4SO)-65, VALVE GUIDE, INSPECTION, Cylinder Head.> <Ref. to ME(H4SO)-67, INTAKE AND EXHAUST VALVE OIL SEAL, INSPECTION, Cylinder Head.>

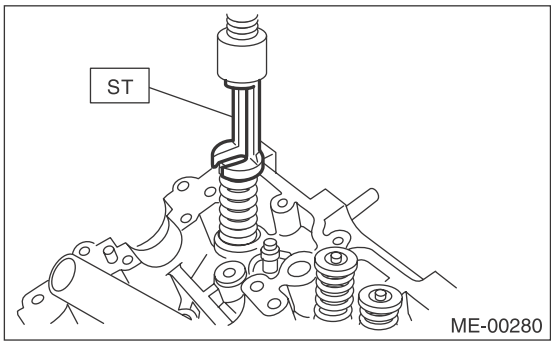

D: ASSEMBLY

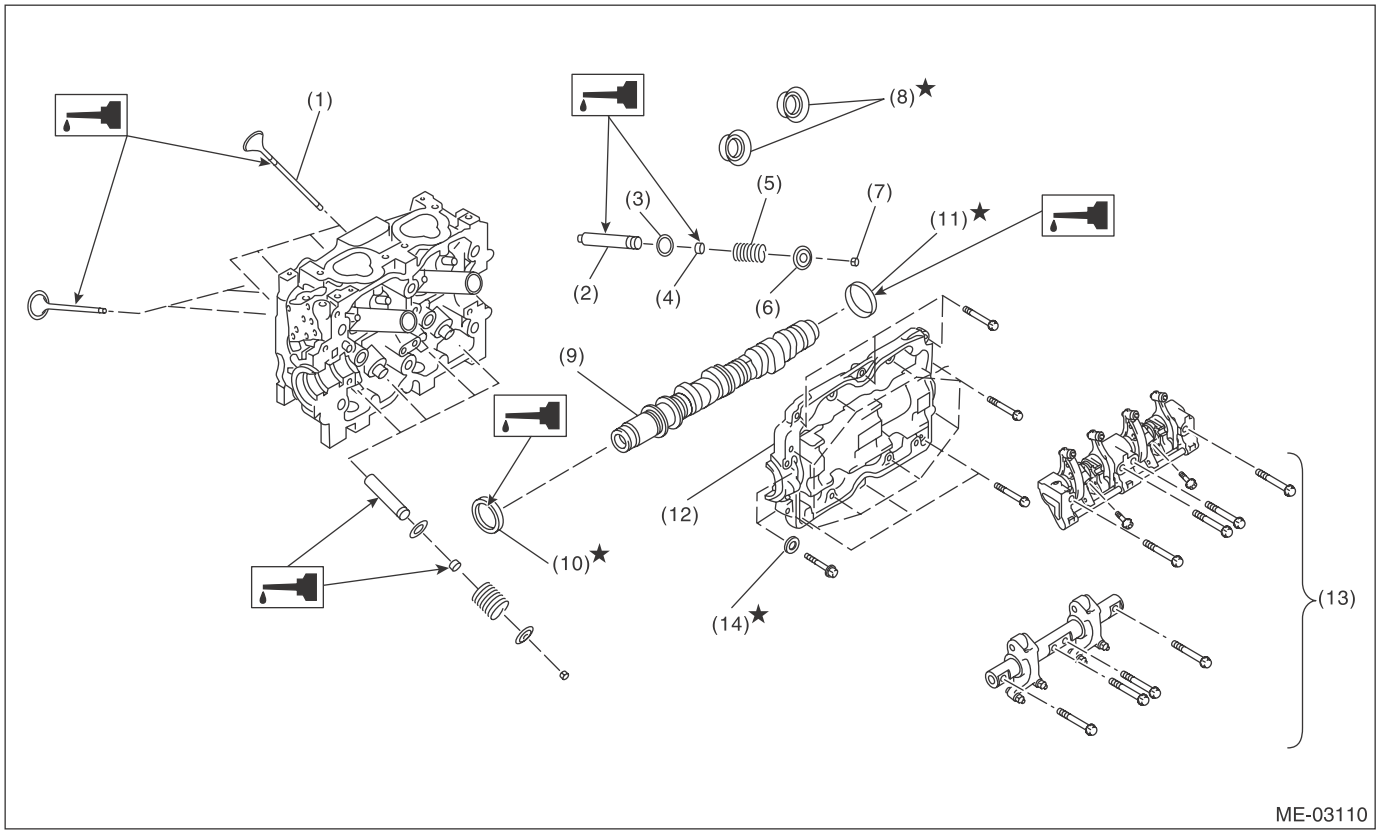

(1)	Valve	(6)	Retainer	(11)	PLUG
(2)	Valve guide	(7)	Retainer key	(12)	Camshaft cap
(3)	Valve spring seat	(8)	Spark plug gasket	(13)	Valve rocker ASSY
(4)	Oil seal	(9)	Camshaft	(14)	Seal washer
(5)	Valve spring	(10)	Oil seal		

1) Install the valve spring and valve.
(1) Coat the stem of each valve with engine oil and insert the valve into valve guide.

NOTE:
When inserting the valve into valve guide, use special care not to damage the oil seal lip.

(2) Set the cylinder head on ST.
ST 498267800 CYLINDER HEAD TABLE

(3) Install the valve spring and retainer.

NOTE:
Be sure to install the valve spring with its close-coiled end facing the cylinder head.

(4) Set the ST to the valve spring.
ST 499718000 VALVE SPRING REMOVER

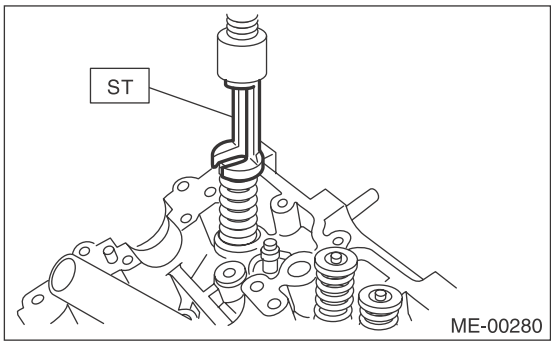

(5) Compress the valve spring and fit the valve spring retainer key.

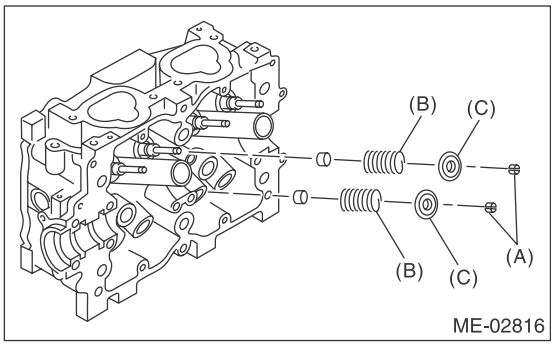

(A) Retainer key
(B) Valve spring
(C) Retainer

(6) After installing, tap the valve spring retainers lightly with a plastic hammer for better seating.

E: INSPECTION

1. CYLINDER HEAD

1) Check for cracks or damage. Use liquid penetrant tester on the important sections to check for fissures.
Check that there are no marks of gas leaking or water leaking on gasket installing surface.
2) Place the cylinder head on the ST.
ST 498267800 CYLINDER HEAD TABLE
3) Measure the warping of the cylinder head surface that mates with cylinder block using a straight edge (A) and thickness gauge (B).
If the warping exceeds the limit, correct the surface by grinding it with a surface grinder.

Warping limit:
0.035 mm (0.0014 in)

Grinding limit:
0.1 mm (0.004 in)

Standard height of cylinder head:
97.5 mm (3.84 in)

NOTE:
Uneven torque for the cylinder head bolts can cause warpage. When reassembling, pay special attention to the torque so as to tighten evenly.

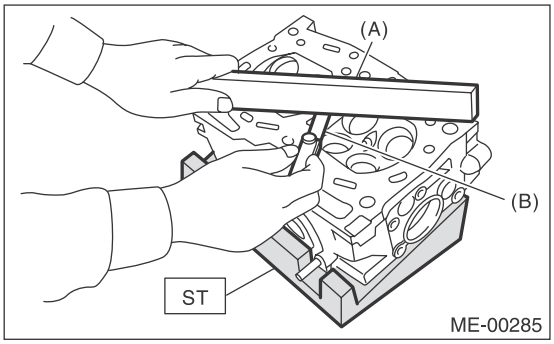

2. VALVE SEAT

Inspect the intake and exhaust valve seats, and correct the contact surfaces with a valve seat cutter if they are defective or when valve guides are replaced.

Contacting width of valve and valve seat W:

Standard
Intake (A)
0.8 — 1.4 mm (0.03 — 0.055 in)
Exhaust (B)
1.2 — 1.8 mm (0.047 — 0.071 in)

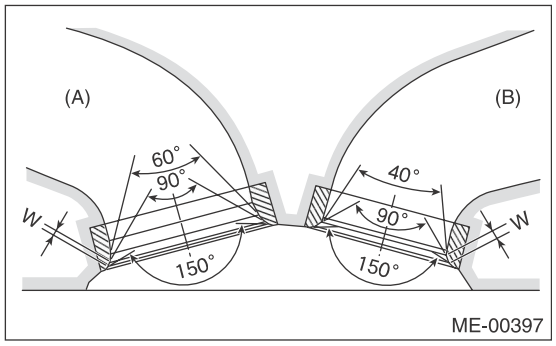

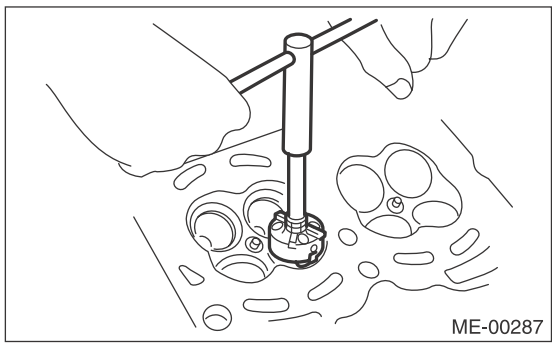

3. VALVE GUIDE

1) Check the clearance between valve guide and valve stem. The clearance can be checked by measuring respectively the outer diameter of valve stem with a micrometer and the inner diameter of valve guide with a caliper gauge.

Clearance between the valve guide and valve stem:

Standard
Intake
0.035 — 0.062 mm (0.0014 — 0.0024 in)
Exhaust
0.040 — 0.067 mm (0.0016 — 0.0026 in)

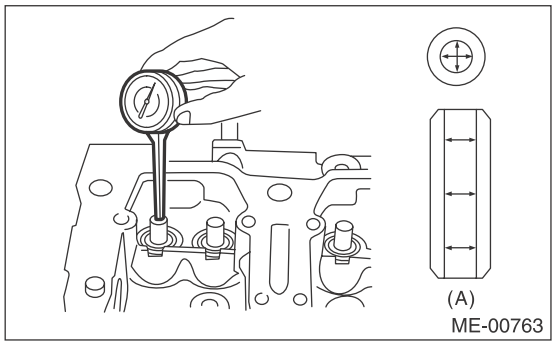

(A) Valve guide

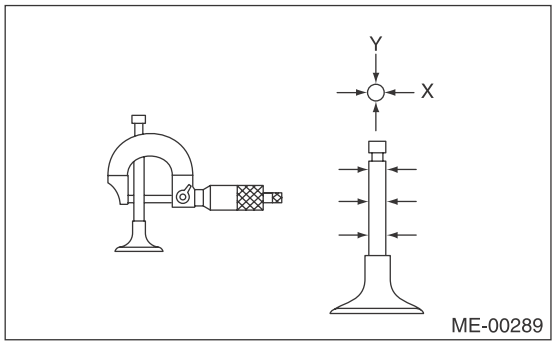

2) If the clearance between the valve guide and valve stem exceeds the standard, replace the valve guide or valve itself, whichever shows greater amount of wear or damage. See the following procedure for valve guide replacement.

Valve guide inner diameter:
6.000 — 6.012 mm (0.2362 — 0.2367 in)

Valve stem outer diameters:
Intake
5.950 — 5.965 mm (0.2343 — 0.2348 in)
Exhaust
5.945 — 5.960 mm (0.2341 — 0.2346 in)

(1) Place the cylinder head on ST1 with the combustion chamber upward so that valve guides fit the holes in ST1.
(2) Insert the ST2 into valve guide and press it down to remove the valve guide.

ST1 498267800 CYLINDER HEAD TABLE
ST2 499767200 VALVE GUIDE REMOVER

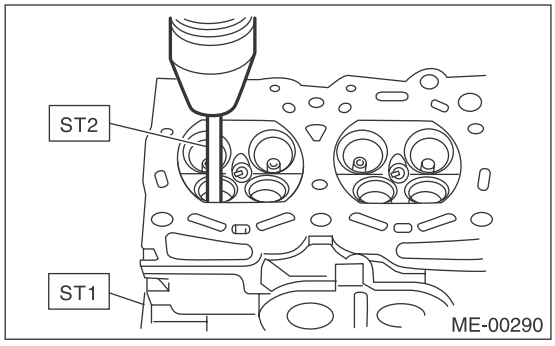

(3) Turn the cylinder head upside down and place the ST as shown in the figure.

Intake side
ST 499767700 VALVE GUIDE ADJUSTER
Exhaust side
ST 499767800 VALVE GUIDE ADJUSTER

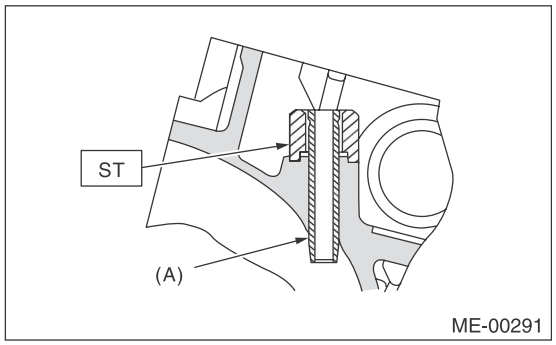

(A) Valve guide

(4) Before installing a new valve guide, make sure that neither scratches nor damages exist on the inner surface of valve guide holes in cylinder head.

(5) Coat a new valve guide with sufficient oil, put it into the cylinder head, and insert the ST1 into the valve guide. Press in until the valve guide upper end is flush with the upper surface of ST2.

ST1 499767200 VALVE GUIDE REMOVER
Intake side
ST2 499767700 VALVE GUIDE ADJUSTER
Exhaust side
ST2 499767800 VALVE GUIDE ADJUSTER

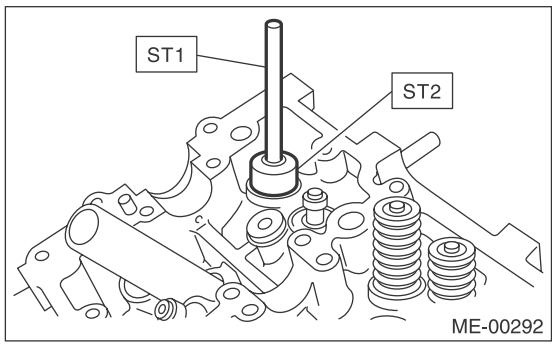

(6) Check the valve guide protrusion amount "L".

Valve guide protrusion amount L:
Intake
20.0 — 21.0 mm (0.787 — 0.827 in)
Exhaust
16.5 — 17.5 mm (0.650 — 0.689 in)

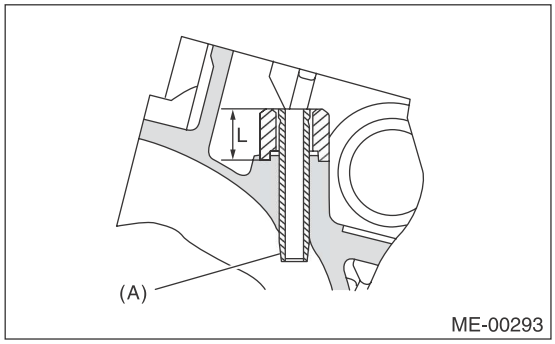

(A) Valve guide

(7) Ream the inside of valve guide using ST. Put the ST in valve guide, and rotate the ST slowly clockwise while pushing it lightly. Bring the ST back while rotating it clockwise.

NOTE:
• Apply engine oil to the ST when reaming.
• If the inner surface of valve guide is damaged, the edge of ST should be slightly ground with oil stone.
• If the inner surface of valve guide becomes lustrous and the ST does not chip, use a new ST or remedy the ST.

ST 499767400 VALVE GUIDE REAMER

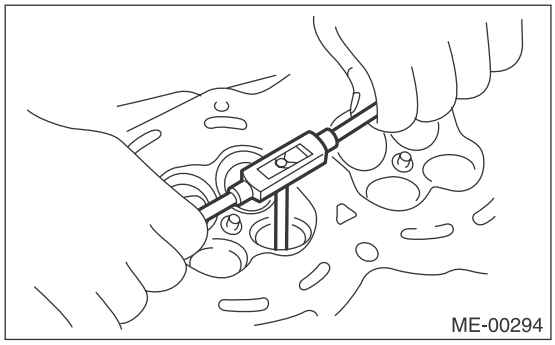

(8) After reaming, clean the valve guide to remove chips.

(9) Recheck the contact condition between valve and valve seat after replacing the valve guide.

4. INTAKE AND EXHAUST VALVE

1) Inspect the flange and valve stem of valve, and replace the valve with a new part if damaged, worn, deformed, or if dimension "H" in the figure is outside of the specified limit.

Head edge thickness H:

Intake (A)
Standard
0.8 — 1.2 mm (0.03 — 0.047 in)

Exhaust (B)
Standard
1.0 — 1.4 mm (0.039 — 0.055 in)

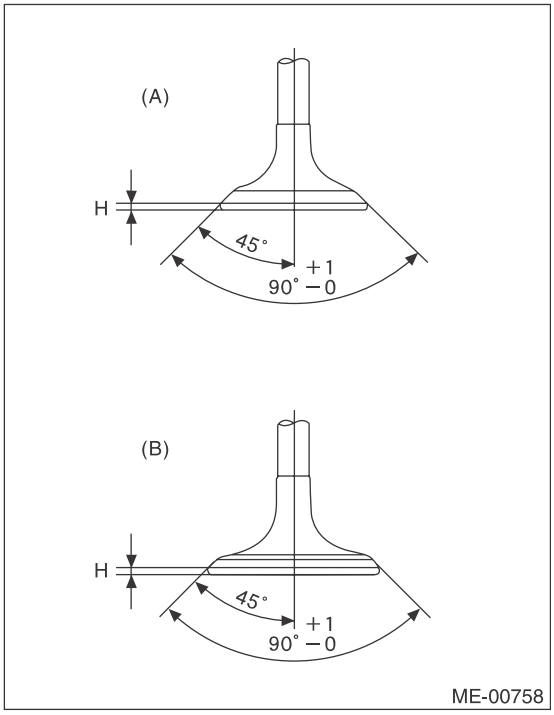

2) Put a small amount of grinding compound on the valve seat surface, and lap the valve and valve seat surface. Replace with a new valve oil seal after lapping.

NOTE:
It is possible to differentiate between the intake valve and the exhaust valve by their overall length.

Valve overall length:
Intake
120.6 mm (4.75 in)
Exhaust
121.7 mm (4.79 in)

5. VALVE SPRING

1) Check the valve springs for damage, free length, and tension. Replace the valve spring if it is not within the standard value presented in the table.
2) To measure the squareness of the valve spring, stand the valve spring on a surface plate and measure its deflection at the top of valve spring using a right angle gauge.

Free length	mm (in)	55.2 (2.173)
Tension/spring height N (kgf, lb)/mm (in)	Set	235.3 — 270.7 (24 — 27.6, 52.9 — 60.8) /45.0 (1.772)
	Lift	578.9 — 639.9 (59.1 — 65.3, 130.3 — 143.9) /34.7 (1.366)
Squareness		2.5°, 2.4 mm (0.094 in) or less

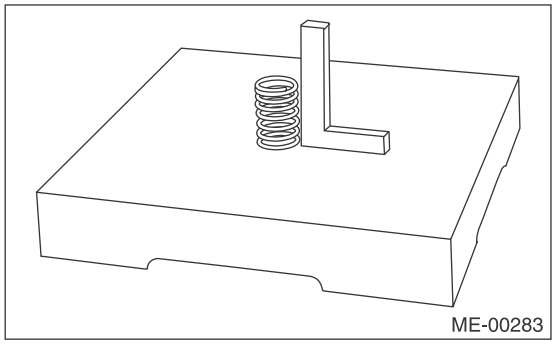

6. INTAKE AND EXHAUST VALVE OIL SEAL

1) For the following, replace the oil seal with a new part.
See the procedure 2) and subsequent for replacement procedures.
- When the lip is damaged.
- When the spring is out of the specified position.
- When readjusting the surfaces of valve and valve seat.
- When replacing the valve guide.

2) Place the cylinder head on ST1, and use ST2 to press-fit the oil seal.
ST1 498267800 CYLINDER HEAD TABLE
ST2 498857100 VALVE OIL SEAL GUIDE

NOTE:
- Apply engine oil to oil seal before press-fitting.
- When press-fitting the oil seal, do not use a hammer or strike in.
- The intake valve oil seals and exhaust valve oil seals are distinguished by their colors.

Color of rubber part:
Intake [Gray]
Exhaust [Green]

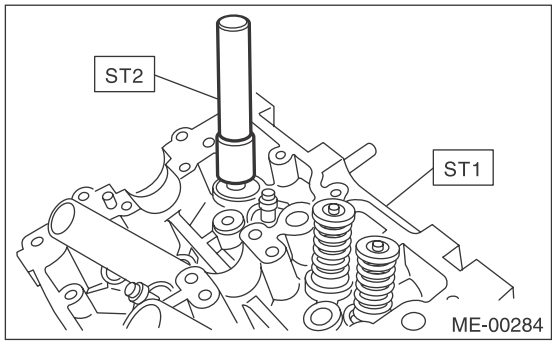

21.Cylinder Block

A: REMOVAL

NOTE:
Before conducting this procedure, drain the engine oil completely.
1) Remove the V-belts. <Ref. to ME(H4SO)-42, REMOVAL, V-belt.>
2) Remove the intake manifold. <Ref. to FU(H4SO)-16, REMOVAL, Intake Manifold.>
3) Remove the crank pulley. <Ref. to ME(H4SO)-44, REMOVAL, Crank Pulley.>
4) Remove the timing belt cover. <Ref. to ME(H4SO)-46, REMOVAL, Timing Belt Cover.>
5) Remove the timing belt. <Ref. to ME(H4SO)-47, REMOVAL, Timing Belt.>
6) Remove the crank sprocket. <Ref. to ME(H4SO)-53, REMOVAL, Crank Sprocket.>
7) Remove the generator and A/C compressor with their brackets.
8) Remove the cylinder head. <Ref. to ME(H4SO)-61, REMOVAL, Cylinder Head.>
9) Remove the drive plate. (CVT model) <Ref. to CVT-135, REMOVAL, Drive Plate.>
10) Remove the clutch disc and cover. (MT model) <Ref. to CL-11, REMOVAL, Clutch Disc and Cover.>
11) Remove the oil separator cover.
12) Remove the water by-pass pipe for heater.
13) Remove the water pump. <Ref. to CO(H4SO)-16, REMOVAL, Water Pump.>
14) Remove the bolt which secures the oil pump to the cylinder block.

NOTE:
When disassembling and checking the oil pump, loosen the relief valve plug before removing the oil pump.

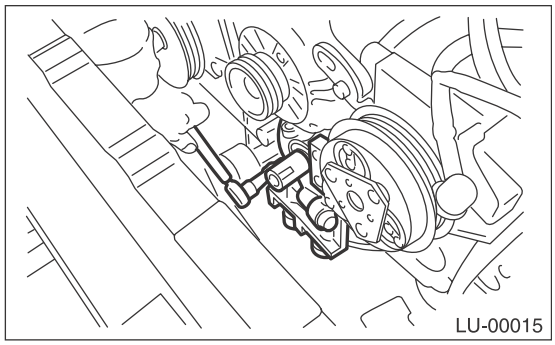

15) Remove the oil pump from cylinder block using a flat tip screwdriver.

CAUTION:
Be careful not to scratch the mating surface of cylinder block and oil pump.

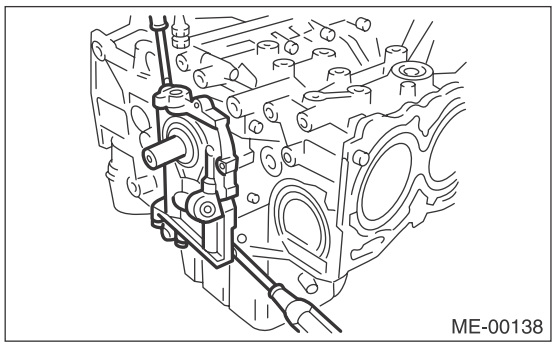

16) Remove the front oil seal from the oil pump.
17) Remove the oil pan and cylinder block lower.
(1) Set the part so that the cylinder block LH is on the upper side.
(2) Remove the bolts which secure the oil pan to the cylinder block lower.
(3) Insert an oil pan cutter blade into the gap between cylinder block lower and oil pan, and remove the oil pan.

CAUTION:
Do not use a screwdriver or similar tools in place of oil pan cutter.

(4) Remove the bolts which secure the cylinder block lower to the cylinder block, and remove the cylinder block lower by using flat tip screwdriver.

CAUTION:
Insert the flat tip screwdriver to the position shown in the figure, and be careful not to damage the mating surface of the cylinder block and cylinder block lower.

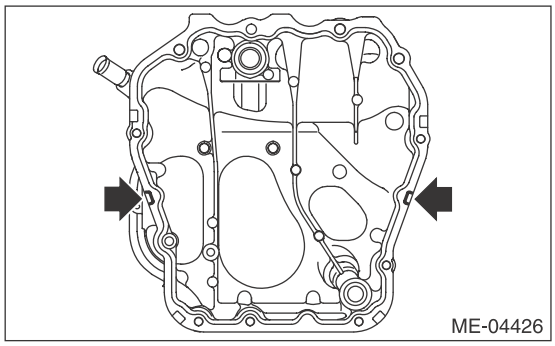

18) Remove the oil strainer.
19) Remove the baffle plate.
20) Remove the oil filter. <Ref. to LU(H4SO)-34, REMOVAL, Engine Oil Filter.>

21) Remove the water pipe assembly.

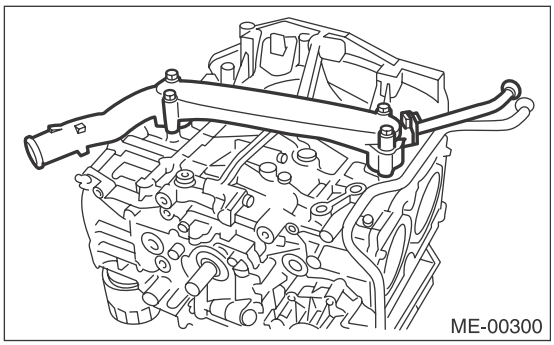

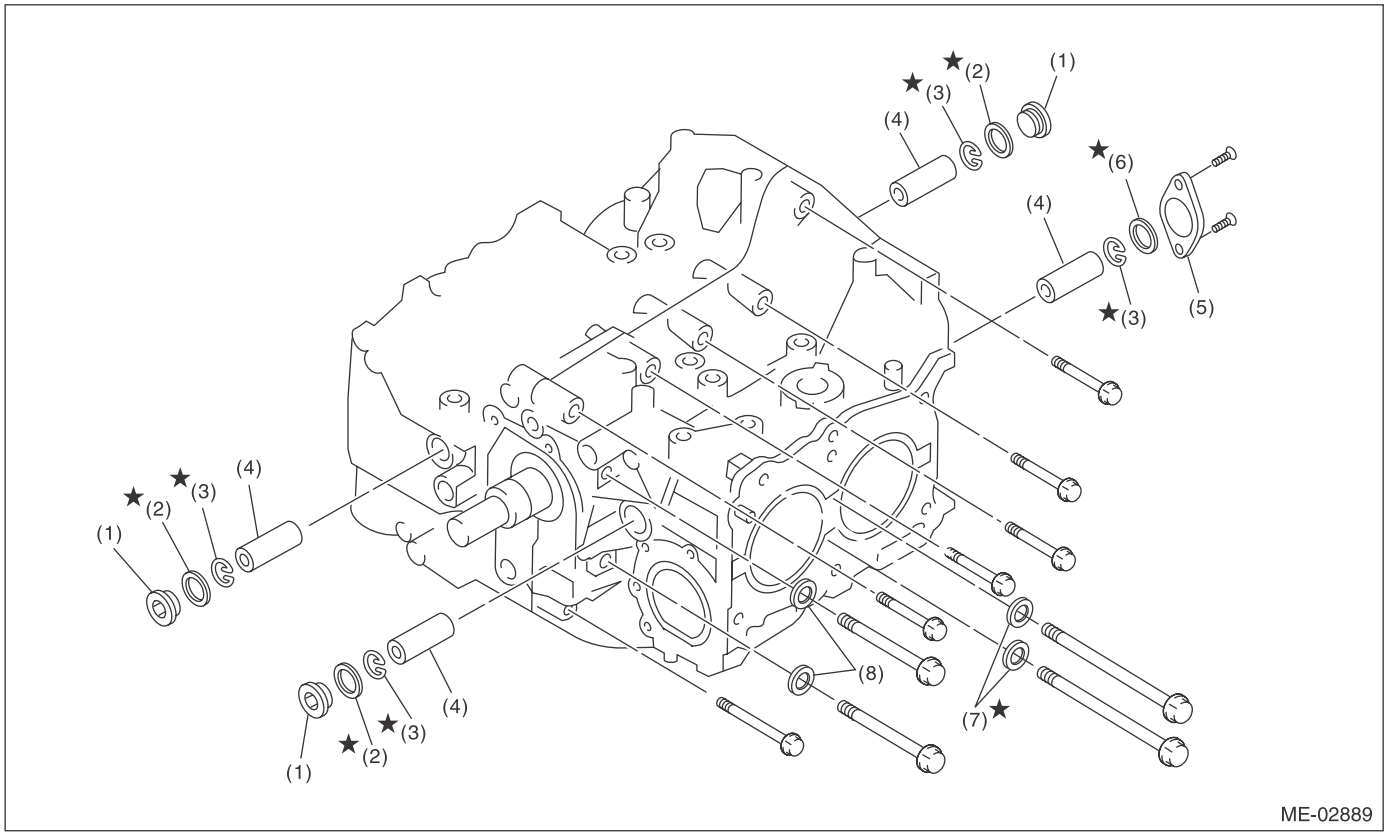

(1) Service hole plug
(2) Gasket
(3) Snap ring
(4) Piston pin
(5) Service hole cover
(6) O-ring
(7) Seal washer
(8) Washer

22) Remove the service hole plugs using a hexagon wrench [14 mm].

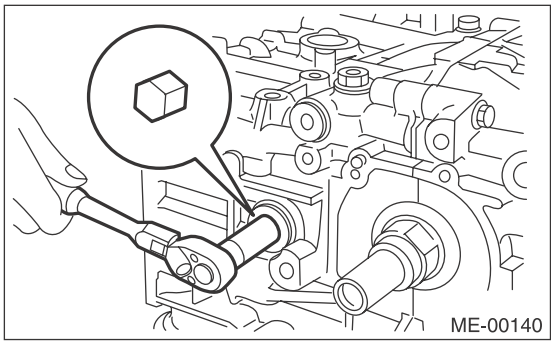

23) Remove the service hole cover.
24) Rotate the crankshaft to bring #1 and #2 pistons to bottom dead center position, then remove the piston snap ring through service hole of #1 and #2 cylinders.

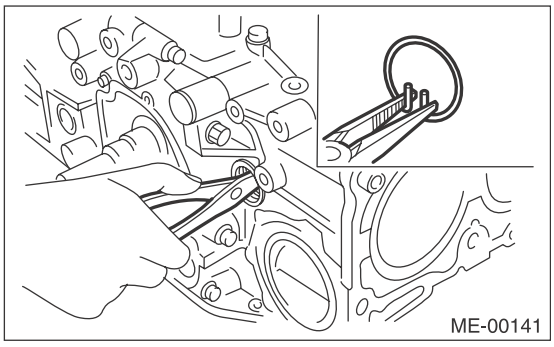

25) Draw out the piston pin from #1 and #2 pistons using ST.
ST 499097700 PISTON PIN REMOVER

NOTE:
Be careful not to confuse the original combination of piston, piston pin and cylinder.

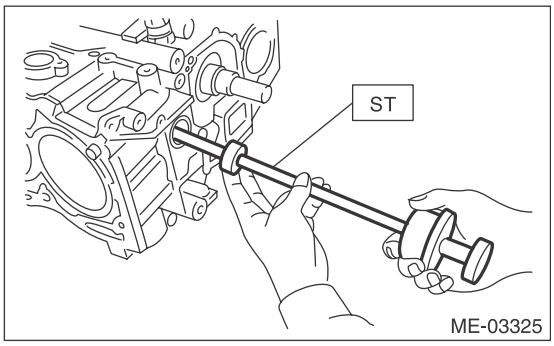

26) Similarly draw out the piston pins from #3 and #4 pistons.
27) Remove the cylinder block connecting bolt on the RH side.
28) Loosen the cylinder block connecting bolt on the LH side by 2 to 3 turns.
29) Set the part so that the cylinder block LH is on the upper side, and remove the cylinder block connecting bolt.

30) Separate the cylinder block LH and RH.

NOTE:
When separating the cylinder block, do not allow the connecting rod to fall or damage the cylinder block.

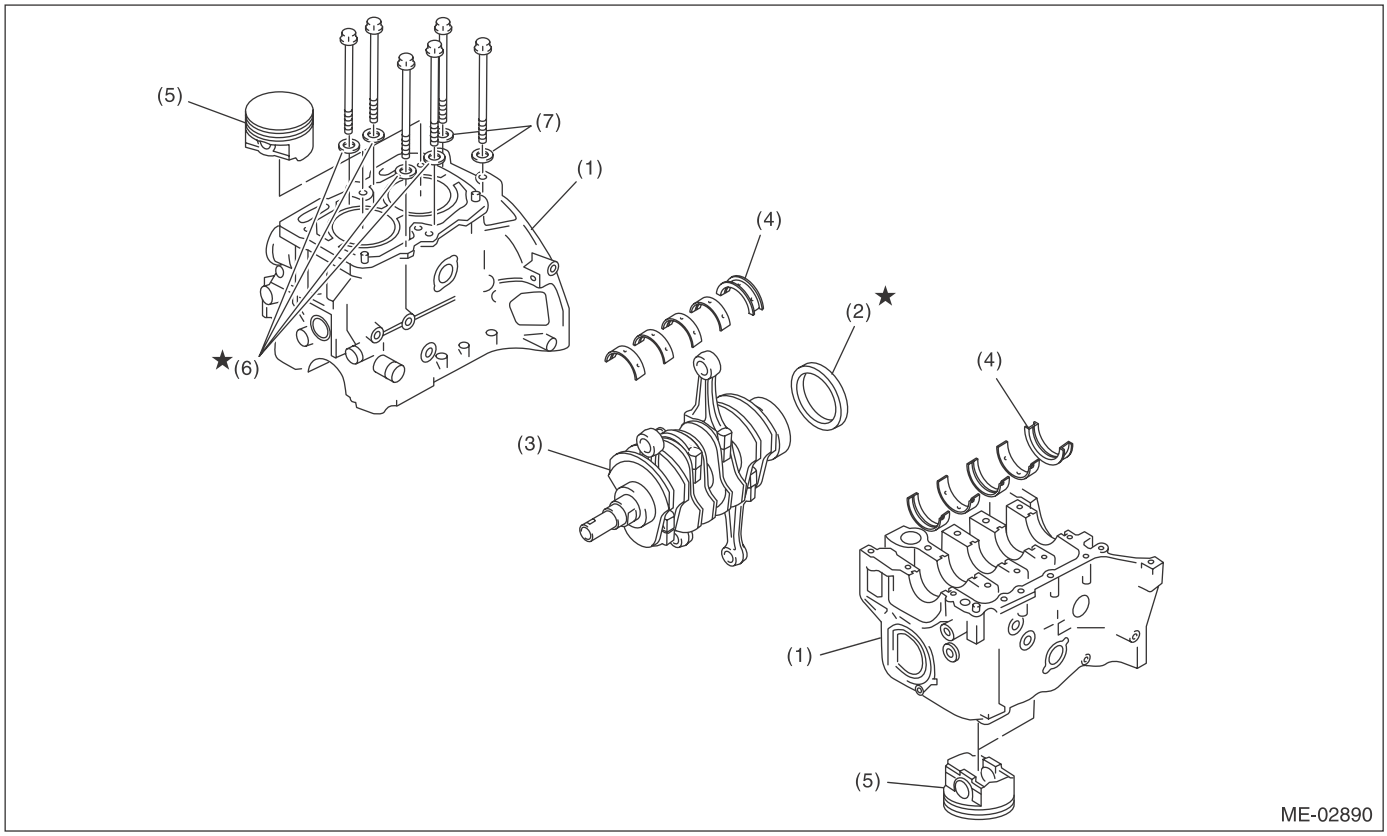

(1) Cylinder block
(2) Rear oil seal
(3) Crankshaft
(4) Crankshaft bearing
(5) Piston
(6) Seal washer
(7) Washer

31) Remove the rear oil seal.
32) Remove the crankshaft along with the connecting rod.
33) Remove the crankshaft bearings from cylinder block using a hammer handle.

NOTE:
• Press the crankshaft bearing at the end opposite to locking lip to remove.
• Be careful not to confuse the crankshaft bearing combination.

34) Remove each piston from the cylinder block using a wooden bar or hammer handle.

NOTE:
Be careful not to confuse the original combination of piston and cylinder.

B: INSTALLATION

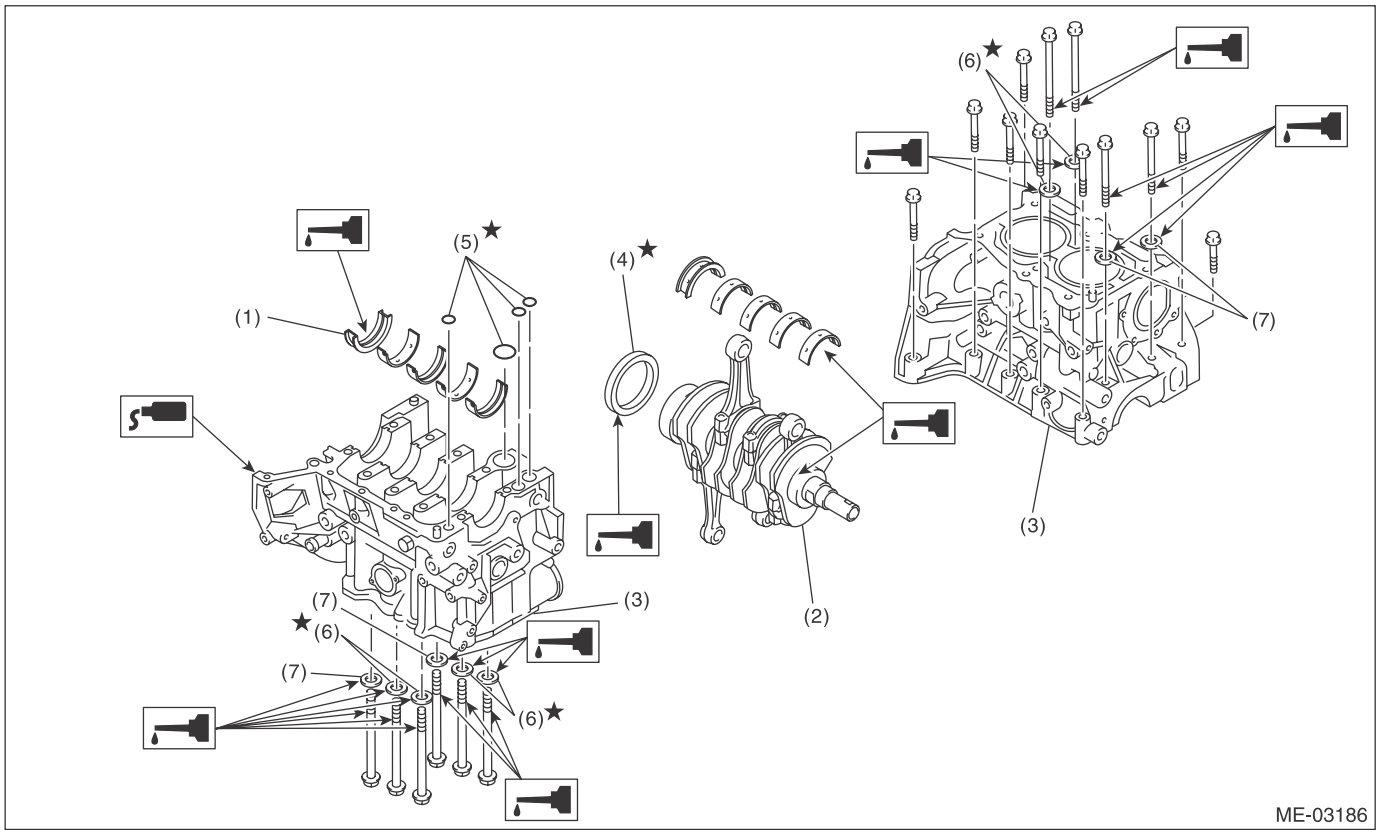

(1) Crankshaft bearing
(2) Crankshaft
(3) Cylinder block
(4) Rear oil seal
(5) O-ring
(6) Seal washer
(7) Washer

1) Remove oil on the mating surface of cylinder block before installation. Apply a coat of engine oil to the bearing and crankshaft journal.
2) Position the crankshaft and O-ring on cylinder block RH.

NOTE:
Use new O-rings.

3) Apply liquid gasket to the mating surfaces of cylinder block RH, and position cylinder block LH.

NOTE:
- Install within 5 min. after applying liquid gasket.
- Do not allow liquid gasket to jut into O-ring grooves, oil passages, bearing grooves, etc.

Liquid gasket:
THREE BOND 1217G (Part No. K0877Y0100) or equivalent

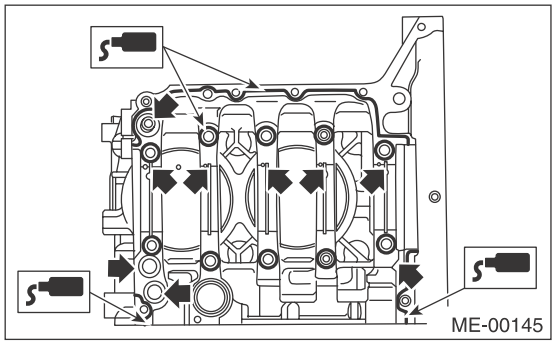

4) Apply a coat of engine oil to the washer and bolt thread.

NOTE:
Use a new seal washer.

5) Tighten the 10 mm cylinder block connecting bolts on the LH side (A — D) in alphabetical order.

Tightening torque:
10 N·m (1.0 kgf-m, 7.4 ft-lb)

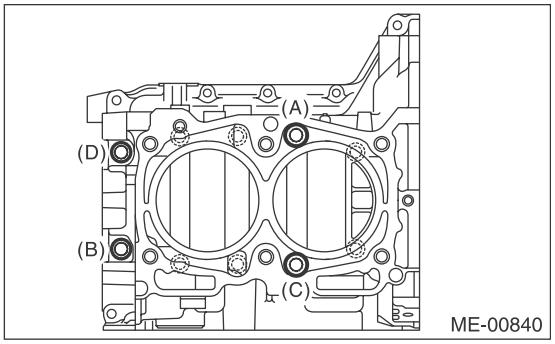

6) Tighten the 10 mm cylinder block connecting bolts on RH side (E — J) in alphabetical sequence.

Tightening torque:
10 N·m (1.0 kgf-m, 7.4 ft-lb)

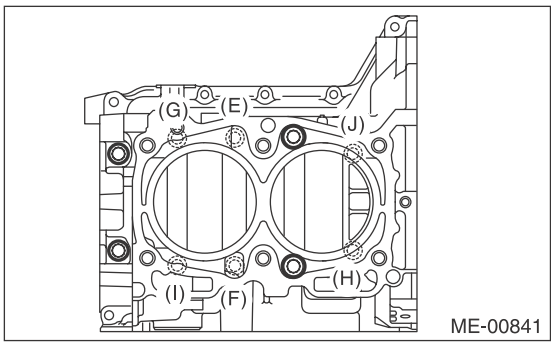

7) Tighten the LH side cylinder block connecting bolts (A — D) further in alphabetical order.

Tightening torque:
18 N·m (1.8 kgf-m, 13.3 ft-lb)

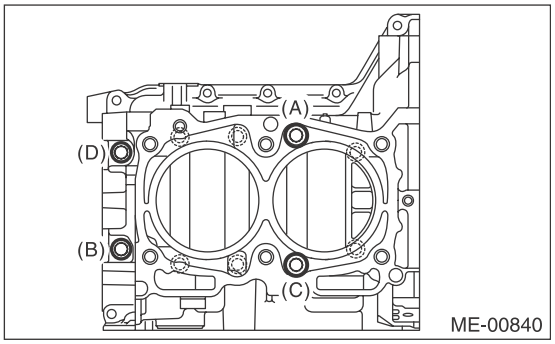

8) Tighten the RH side cylinder block connecting bolts (E — J) further in alphabetical order.

Tightening torque:
18 N·m (1.8 kgf-m, 13.3 ft-lb)

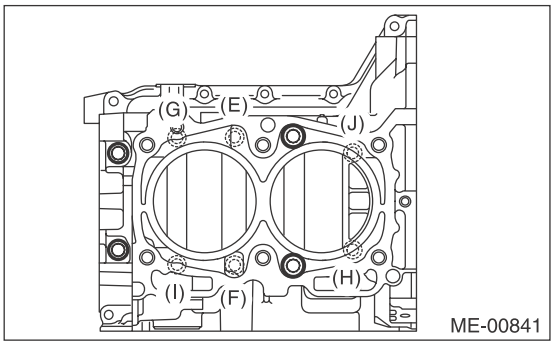

9) Tighten the LH side cylinder block connecting bolts (A — D) further in alphabetical order.

- (A), (C): Angle tightening

Tightening angle:
90°

- (B), (D): Torque tightening

Tightening torque:
40 N·m (4.1 kgf-m, 29.5 ft-lb)

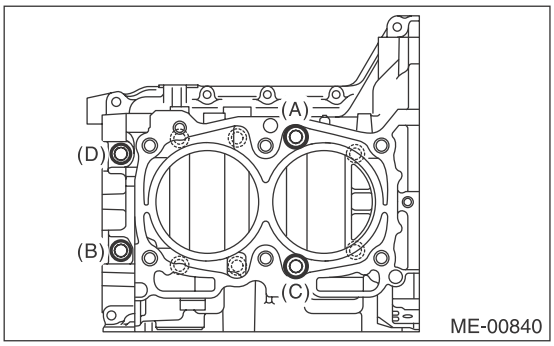

10) Tighten the RH side cylinder block connecting bolts (E — J) further in alphabetical order.

Tightening angle:
90°

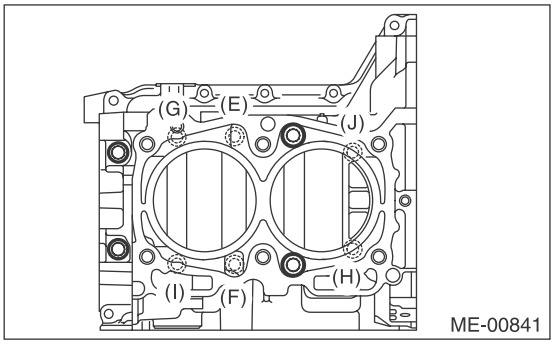

11) Tighten the 8 mm and 6 mm cylinder block connecting bolts on the LH side (A — H) in alphabetical order.

Tightening torque:
(A) — (G): 25 N·m (2.5 kgf-m, 18.4 ft-lb)
(H): 6.4 N·m (0.7 kgf-m, 4.7 ft-lb)

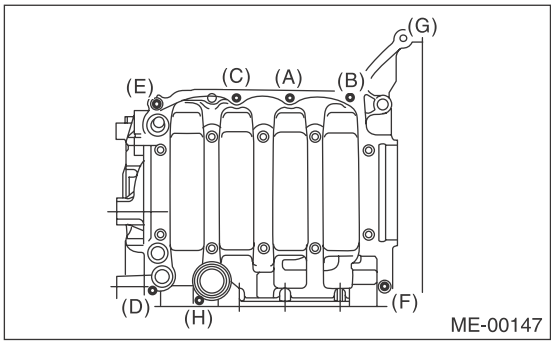

12) Apply a coat of engine oil to the oil seal periphery and install the rear oil seal using ST1 and ST2.

NOTE:
Use a new rear oil seal.

ST1	499597100	CRANKSHAFT OIL SEAL GUIDE
ST2	499587200	CRANKSHAFT OIL SEAL INSTALLER

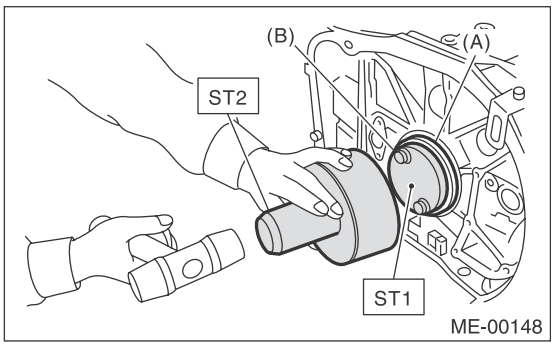

(A) Rear oil seal
(B) Flywheel attaching bolt

13) Position the top ring gap at (A) or (B) in the figure.
14) Position the second ring gap at 180° on the reverse side the top ring gap.

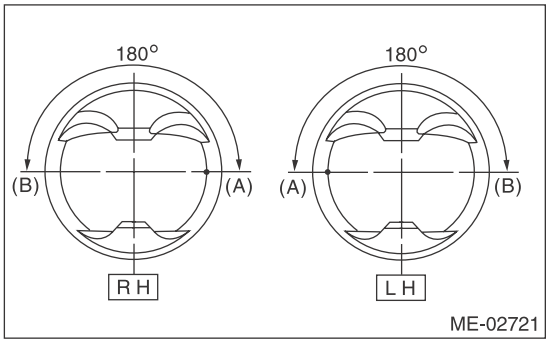

15) Position the upper rail gap at (C) in the figure.

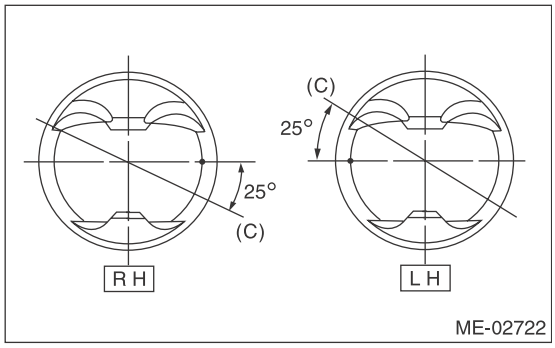

16) Align the upper rail spin stopper (E) to the side hole (D) on the piston.

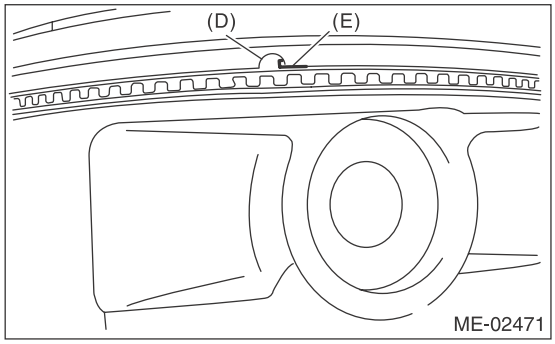

17) Position the expander gap at (F) in the figure on the 180° opposite direction of (C).

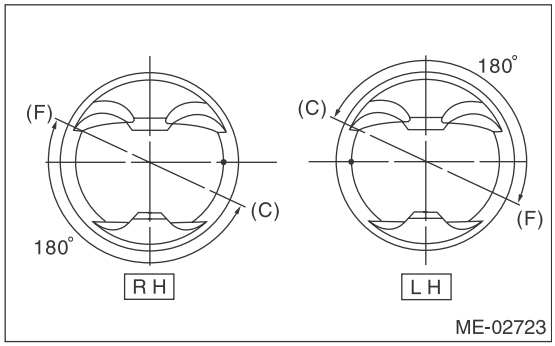

18) Set the lower rail gap at position (G), located 120° clockwise from (C).

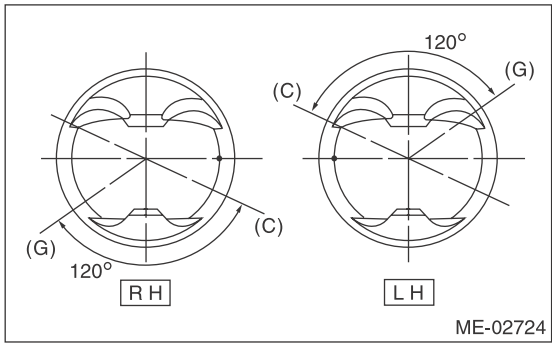

NOTE:
• Make sure ring gaps do not face the same direction.
• Make sure ring gaps are not within the piston skirt area.

19) Install the snap ring.
Before positioning the piston on the cylinder block, attach the snap ring in the service hole of the cylinder block, and the piston pin hole on the opposite side.

NOTE:
Use new snap rings.

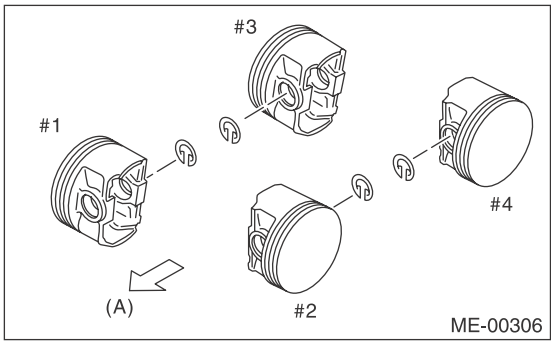

(A) Front side

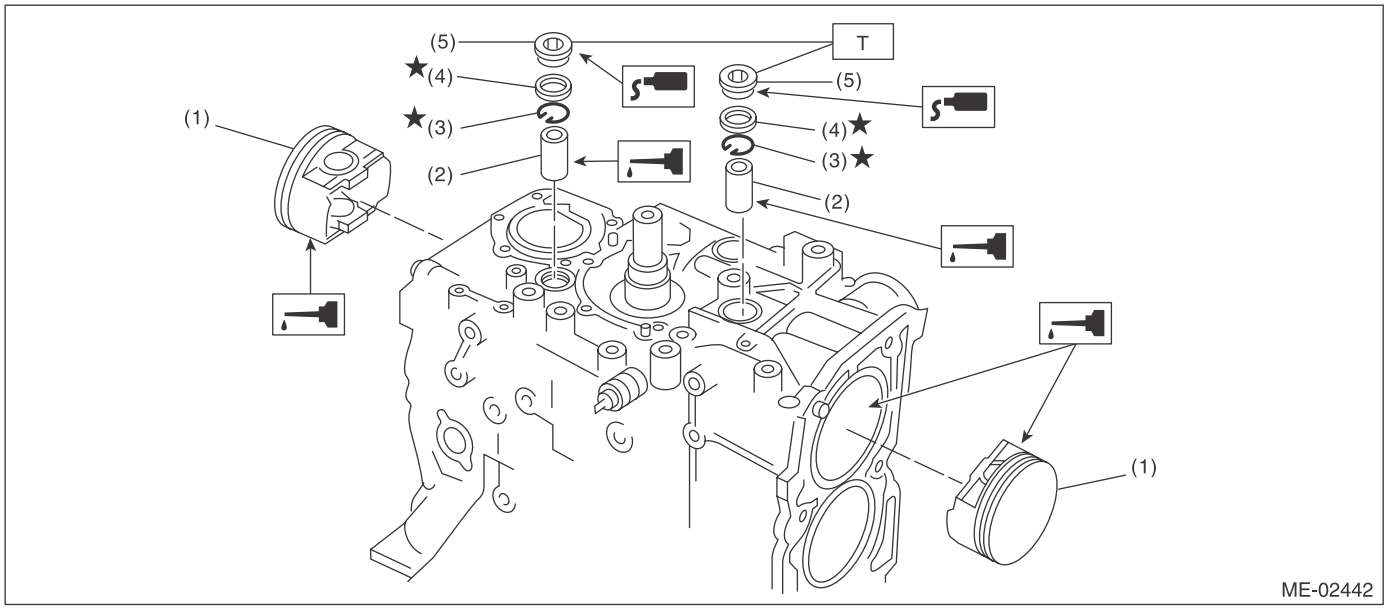

(1) Piston
(2) Piston pin
(3) Snap ring
(4) Gasket
(5) Service hole plug

Tightening torque:N·m (kgf-m, ft-lb)	
T:	*70 (7.1, 51.6)*

20) Install the piston.
(1) Set the parts so that the #1 and #2 cylinders are on the upper side.
(2) Using the ST1, turn the crankshaft so that #1 and #2 connecting rods are set at bottom dead center.

ST1 499987500 CRANKSHAFT SOCKET

(3) Apply a coat of engine oil to the pistons and cylinders and insert pistons in their cylinders using ST2.

ST2 498747300 PISTON GUIDE

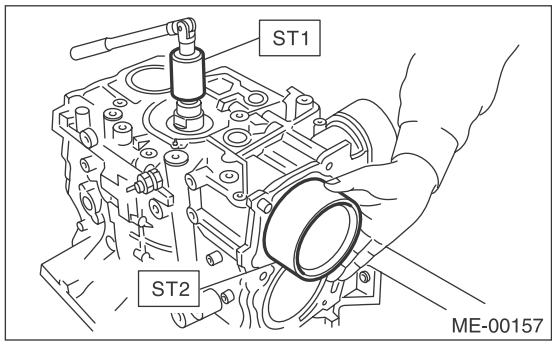

NOTE:
Face the piston front mark towards the front of the engine.

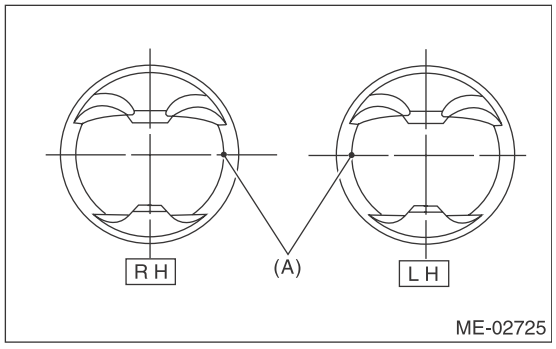

(A) Front mark

21) Install the piston pin.
(1) Apply a thin coat of engine oil to ST3.
(2) Insert ST3 into the service hole to align piston pin hole with connecting rod small end.

ST3 499017100 PISTON PIN GUIDE

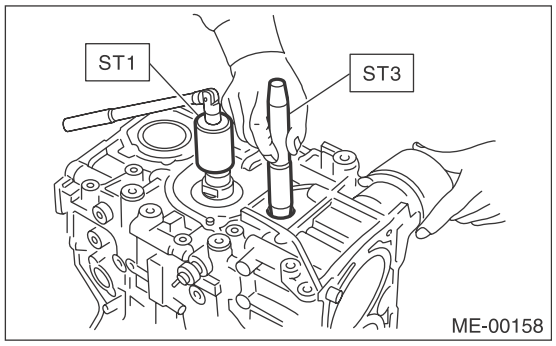

(3) Apply a coat of engine oil to piston pin, and insert the piston pin into piston and connecting rod through service hole.
(4) Install the snap ring.

NOTE:
Use new snap rings.

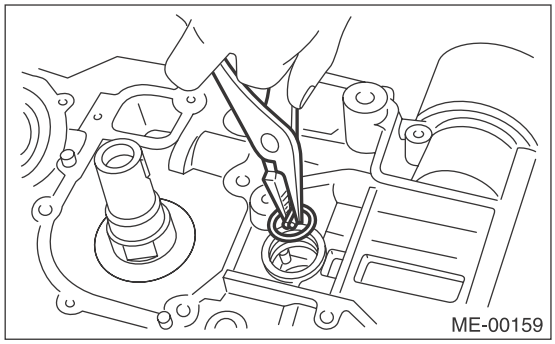

(5) Apply liquid gasket to the threaded portion of the service hole plug.

Liquid gasket:
THREE BOND 1105 (Part No. 004403010) or equivalent

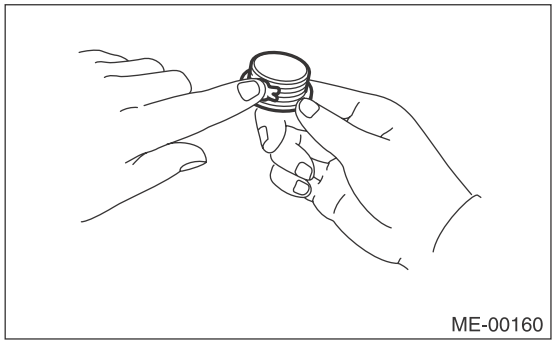

(6) Install the service hole plug and gasket.

NOTE:
Use a new gasket.

Tightening torque:
70 N·m (7.1 kgf-m, 51.6 ft-lb)

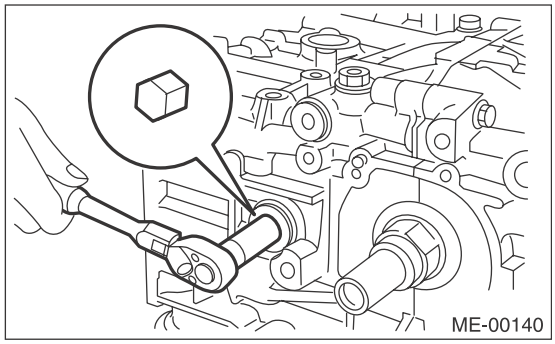

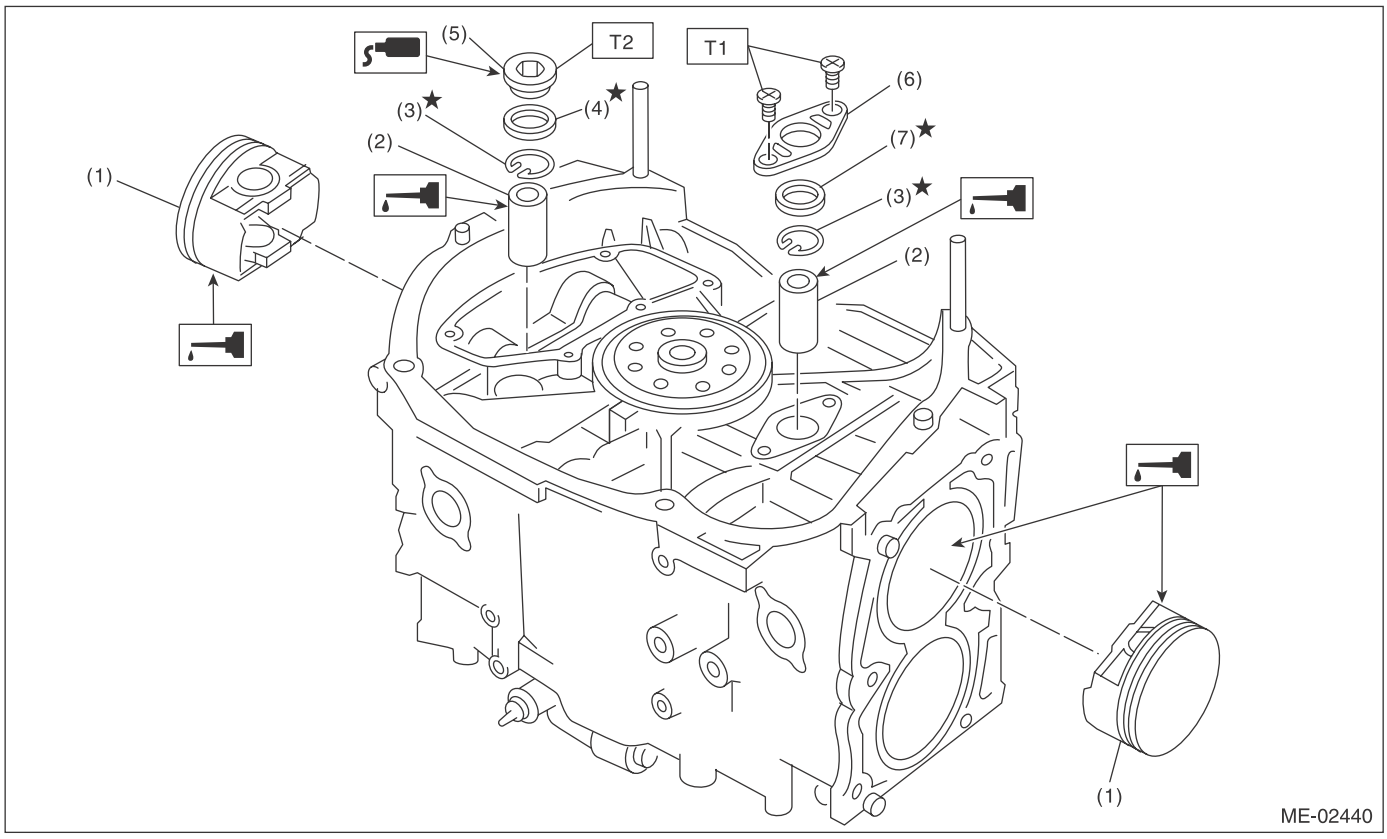

(1)	Piston	(5)	Service hole plug	***Tightening torque:N·m (kgf-m, ft-lb)***	
(2)	Piston pin	(6)	Service hole cover	***T1:***	***6.4 (0.7, 4.7)***
(3)	Snap ring	(7)	O-ring	***T2:***	***70 (7.1, 51.6)***
(4)	Gasket				

(7) Set the parts so that the #3 and #4 cylinders are on the upper side. Following the same procedures as used for #1 and #2 cylinders, install the pistons and piston pins.
(8) Install the service hole cover.

NOTE:
Use new O-rings.

Tightening torque:
6.4 N·m (0.7 kgf-m, 4.7 ft-lb)

22) Install the water pipe assembly.

NOTE:
Use new O-rings.

Tightening torque:
6.4 N·m (0.7 kgf-m, 4.7 ft-lb)

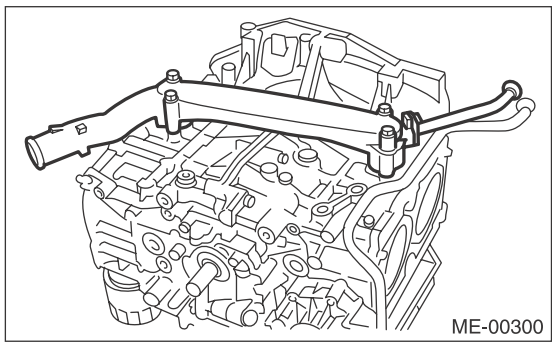

23) Install the baffle plate.

NOTE:
- Use a new seal.
- Make sure that the seals (A) are installed securely on the baffle plate in a direction as shown in the figure below.

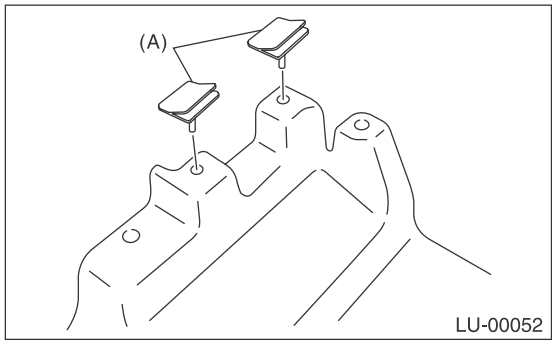

Tightening torque:
6.4 N·m (0.7 kgf-m, 4.7 ft-lb)

24) Apply liquid gasket to the mating surfaces of cylinder block lower, and install the cylinder block lower.

CAUTION:
Be careful not to apply any liquid gasket to the O-ring attachment section.

NOTE:
- Use new O-rings.
- Before installing the cylinder block lower, clean the mating surface of cylinder block lower and cylinder block.
- Install within 5 min. after applying liquid gasket.

Liquid gasket:
THREE BOND 1217G (Part No. K0877Y0100) or equivalent

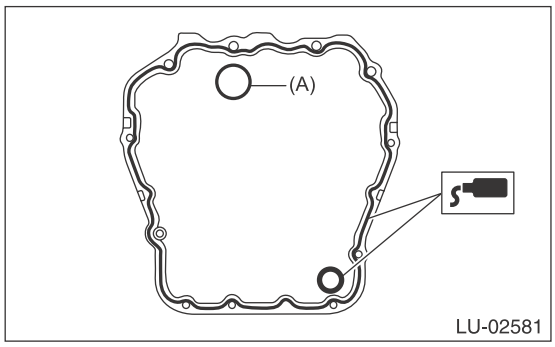

(A) O-ring

Tightening torque:
T1: 6.4 N·m (0.7 kgf-m, 4.7 ft-lb)
T2: 16 N·m (1.6 kgf-m, 11.8 ft-lb)

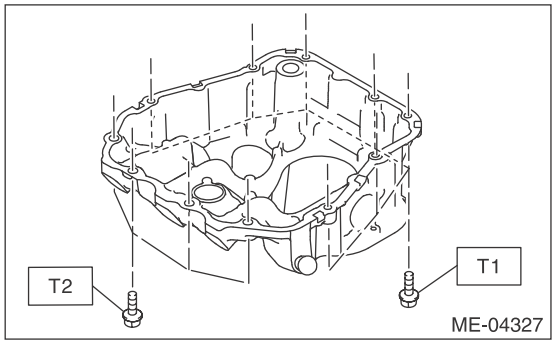

25) Apply liquid gasket to the mating surfaces of oil pan, and install the oil pan.

NOTE:
- Before installing the oil pan, clean the mating surface of oil pan and cylinder block.
- Install within 5 min. after applying liquid gasket.

Liquid gasket:
THREE BOND 1217G (Part No. K0877Y0100) or equivalent

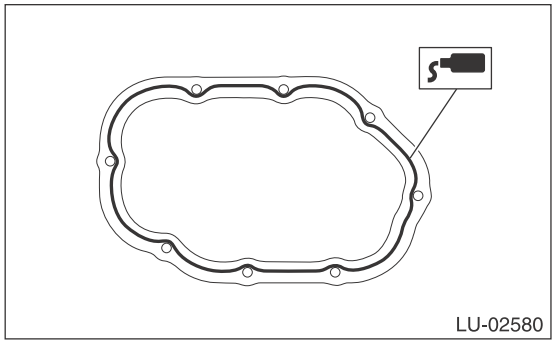

Tightening torque:
5 N·m (0.5 kgf-m, 3.7 ft-lb)

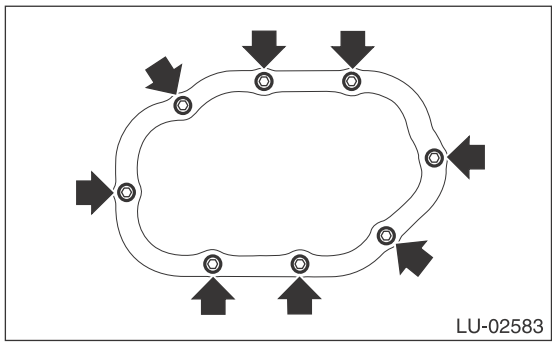

26) Apply liquid gasket to the mating surfaces of the oil separator cover and the threaded portion of bolt (A) shown in the figure (when reusing the bolt), and then install the oil separator cover.

NOTE:
- Install within 5 min. after applying liquid gasket.
- Use new oil separator cover.

Liquid gasket:
- ***Mating surface***
  THREE BOND 1217G (Part No. K0877Y0100) or equivalent
- ***(A) bolt threads (when reusing bolts)***
  THREE BOND 1324 (Part No. 004403042) or equivalent

Tightening torque:
6.4 N·m (0.7 kgf-m, 4.7 ft-lb)

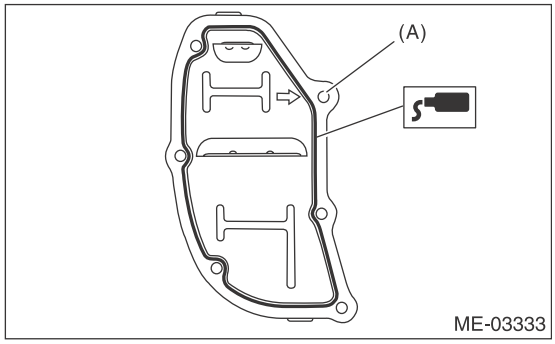

27) Install the drive plate. <Ref. to CVT-135, INSTALLATION, Drive Plate.>
28) Install the oil pump.
(1) Using the ST, install the front oil seal.
ST 499587100 OIL SEAL INSTALLER

NOTE:
Use a new front oil seal.

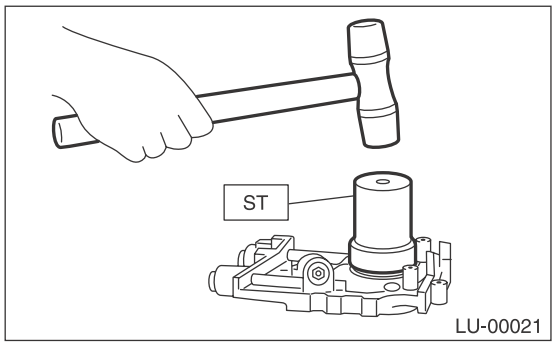

(2) Apply liquid gasket to the mating surfaces of oil pump.

NOTE:
Install within 5 min. after applying liquid gasket.

Liquid gasket:
THREE BOND 1217G (Part No. K0877Y0100) or equivalent

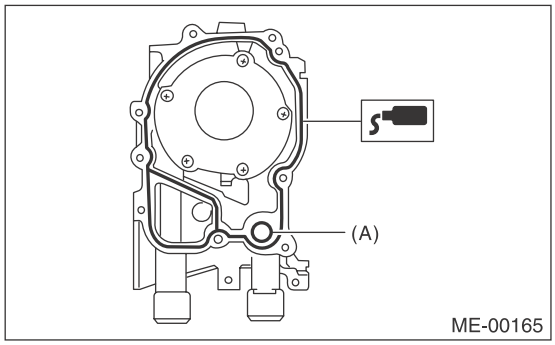

(A) O-ring

(3) Apply a coat of engine oil to the inside of oil seal.

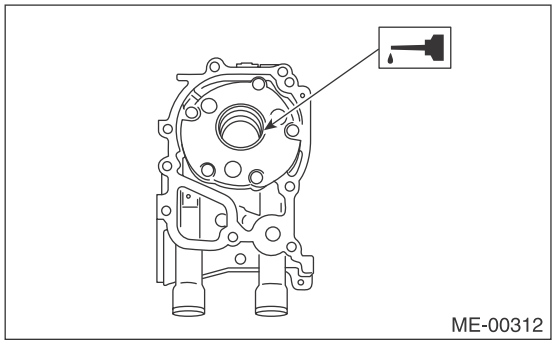

(4) Install the oil pump to cylinder block.

CAUTION:
- **Be careful not to damage the front oil seal during installation.**
- **Make sure the front oil seal lip is not folded.**

NOTE:
- Align the flat surface of oil pump's inner rotor with that of crankshaft before installation.
- Use new O-rings.

• Do not forget to assemble O-rings.
(5) Apply liquid gasket to the three bolts thread shown in figure. (when reusing bolts)

Liquid gasket:
THREE BOND 1324 (Part No. 004403042) or equivalent

Tightening torque:
T: 6.4 N·m (0.7 kgf-m, 4.7 ft-lb)

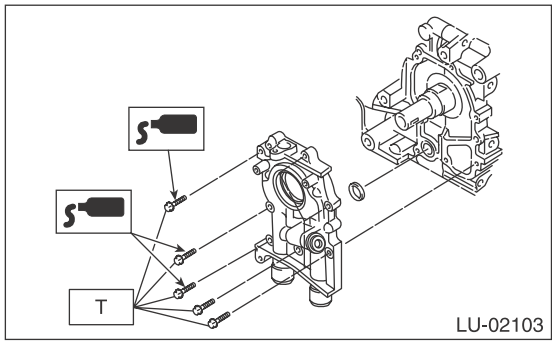

29) Install the water pump and gasket.

NOTE:
• When installing the water pump, tighten bolts in two stages in alphabetical order as shown in the figure.
• Use a new gasket.

Tightening torque:
First: 12 N·m (1.2 kgf-m, 8.9 ft-lb)
Second: 12 N·m (1.2 kgf-m, 8.9 ft-lb)

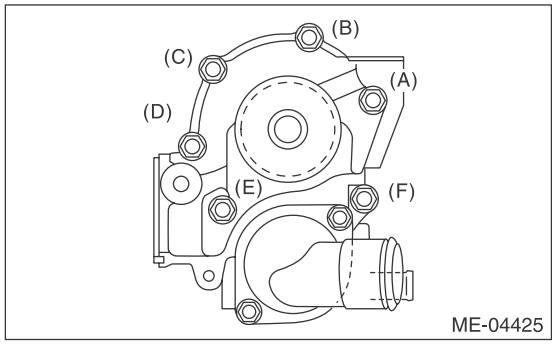

30) Install the water by-pass pipe for heater.

Tightening torque:
6.4 N·m (0.7 kgf-m, 4.7 ft-lb)

31) Install the oil filter.
<Ref. to LU(H4SO)-34, INSTALLATION, Engine Oil Filter.>
32) Install the cylinder head. <Ref. to ME(H4SO)-61, INSTALLATION, Cylinder Head.>
33) Install the generator and A/C compressor with their brackets.

Tightening torque:
36 N·m (3.7 kgf-m, 26.6 ft-lb)

34) Install the crank sprocket. <Ref. to ME(H4SO)-53, INSTALLATION, Crank Sprocket.>
35) Install the timing belt. <Ref. to ME(H4SO)-48, INSTALLATION, Timing Belt.>
36) Adjust the valve clearance. <Ref. to ME(H4SO)-30, ADJUSTMENT, Valve Clearance.>
37) Install the rocker cover.
(1) Install the rocker cover gasket to the rocker cover.

NOTE:
Use a new rocker cover gasket.
(2) Temporarily tighten the rocker cover bolts in alphabetical order shown in the figure, and then tighten to specified torque in alphabetical order in two steps.

Tightening torque:
1st
6.4 N·m (0.7 kgf-m, 4.7 ft-lb)
2nd (only (a) and (b) are tightened)
6.4 N·m (0.7 kgf-m, 4.7 ft-lb)

RH side

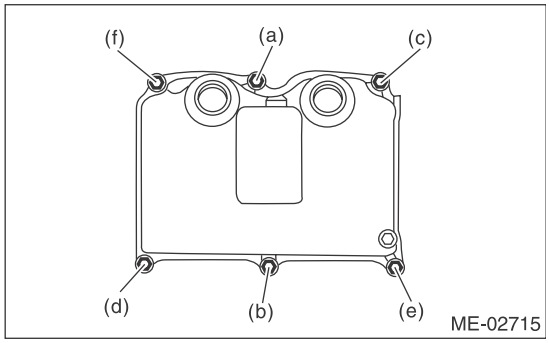

LH side

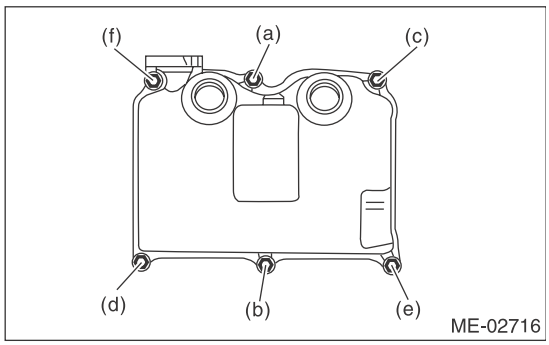

38) Install the timing belt cover. <Ref. to ME(H4SO)-46, INSTALLATION, Timing Belt Cover.>
39) Install the crank pulley. <Ref. to ME(H4SO)-44, INSTALLATION, Crank Pulley.>
40) Install the intake manifold. <Ref. to FU(H4SO)-19, INSTALLATION, Intake Manifold.>
41) Install the V-belts. <Ref. to ME(H4SO)-42, INSTALLATION, V-belt.>

C: DISASSEMBLY

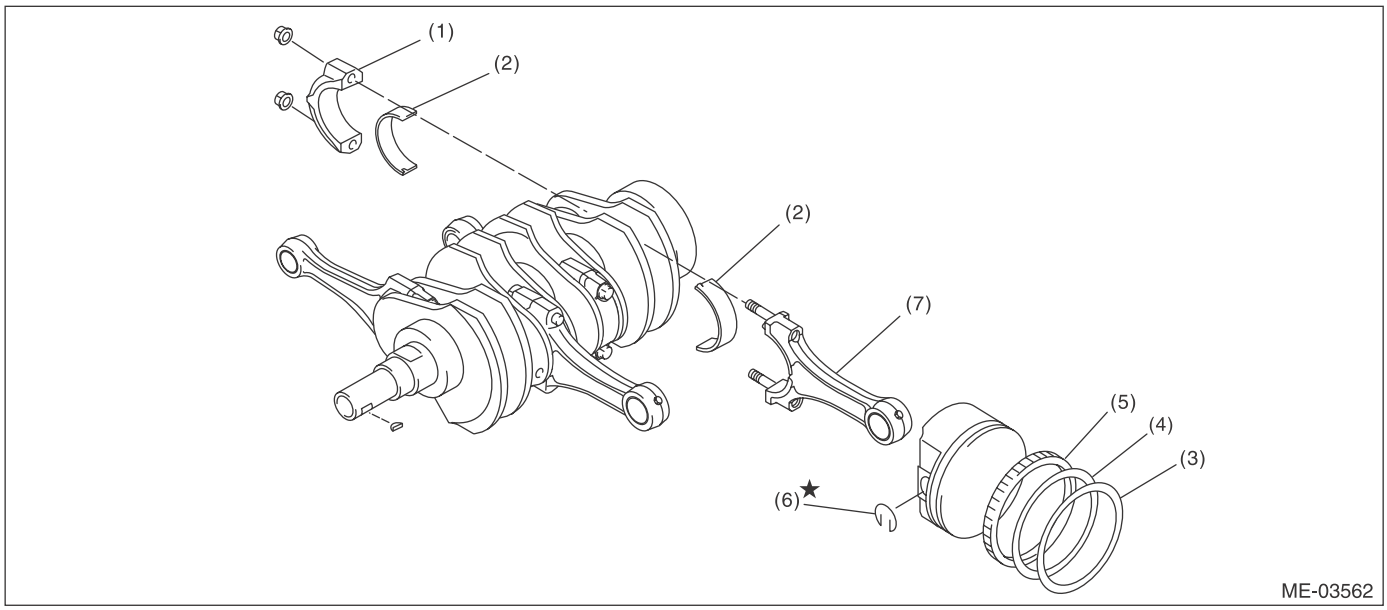

(1) Connecting rod cap
(2) Connecting rod bearing
(3) Top ring
(4) Second ring
(5) Oil ring
(6) Snap ring
(7) Connecting rod

1) Remove the connecting rod cap.
2) Remove the connecting rod bearing.

NOTE:
Keep the removed connecting rods, connecting rod caps and bearings in order so that they are kept in their original combinations/groups, and not mixed together.

3) Remove the piston rings using piston ring expander.
4) Remove the oil ring by hand.

NOTE:
Arrange the removed piston rings in proper order, to prevent confusion.

5) Remove the snap ring.

D: ASSEMBLY

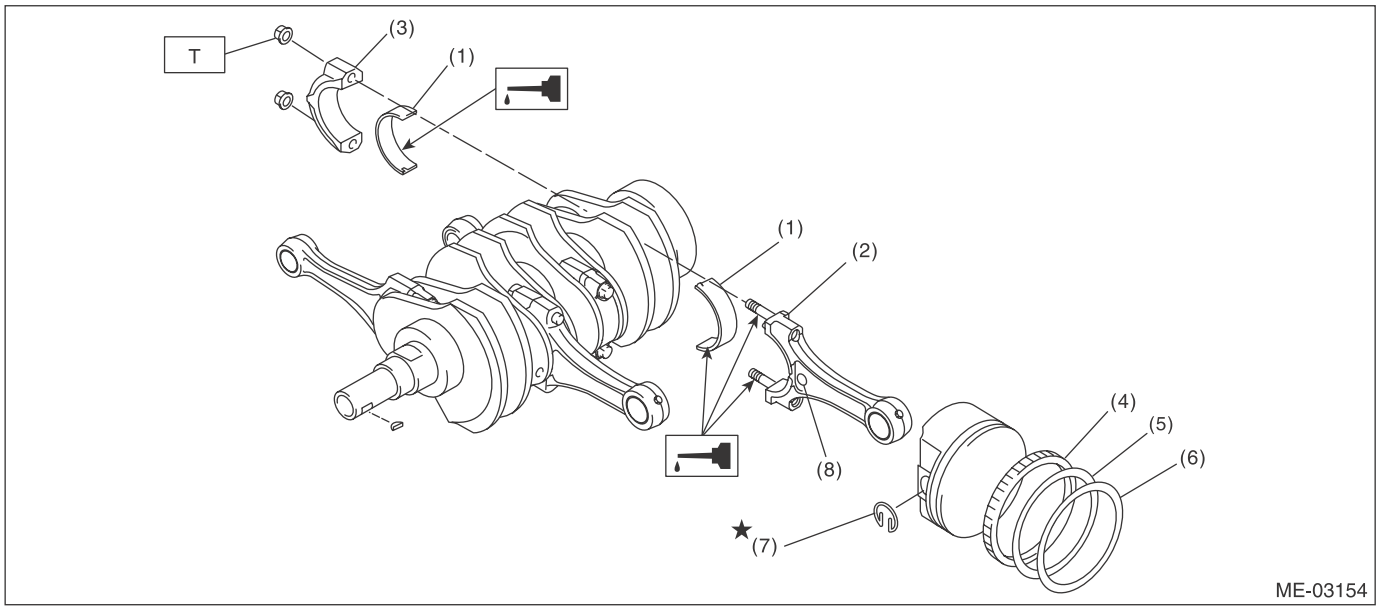

(1)	Connecting rod bearing	(5)	Second ring
(2)	Connecting rod	(6)	Top ring
(3)	Connecting rod cap	(7)	Snap ring
(4)	Oil ring	(8)	Side mark

Tightening torque:N·m (kgf-m, ft-lb)
T: 45 (4.6, 33.2)

1) Apply engine oil to the surface of the connecting rod bearings, and install the connecting rod bearings onto connecting rods and connecting rod caps.
2) Position each connecting rod with the side with a side mark facing forward, and install it.
3) Attach the connecting rod cap, and tighten with connecting rod nut.
Make sure the arrow on connecting rod cap faces the front during installation.

NOTE:
• Each connecting rod has its own mating cap. Make sure that they are assembled correctly by checking their matching number.
• When tightening the connecting rod nuts, apply oil on the threads.

Tightening torque:
45 N·m (4.6 kgf-m, 33.2 ft-lb)
4) Install the oil ring upper rail, expander and lower rail by hand.
5) Install the second ring and top ring using piston ring expander.

NOTE:
Assemble so that the piston ring mark “R” faces the top side of the piston.

E: INSPECTION

1. CYLINDER BLOCK

1) Check for cracks or damage. Use liquid penetrant tester on the important sections to check for fissures. Check that there are no marks of gas leaking or water leaking on gasket installing surface.
2) Check the oil passages for clogging.
3) Inspect the cylinder head surface that mates with cylinder block for warping by using a straight edge, and correct by grinding if necessary.

Warping limit:
0.025 mm (0.00098 in)

Grinding limit:
0.1 mm (0.004 in)

Standard height of cylinder block:
201.0 mm (7.91 in)

2. CYLINDER AND PISTON

1) The cylinder bore size is stamped on the front upper face of the cylinder block.

NOTE:
• Measurement should be performed at a temperature of 20°C (68°F).
• Standard sized pistons are classified into two grades, “A” and “B”. These grades should be used as guide lines in selecting a standard piston.

Standard diameter:
A: 99.505 — 99.515 mm (3.9175 — 3.9179 in)
B: 99.495 — 99.505 mm (3.9171 — 3.9175 in)

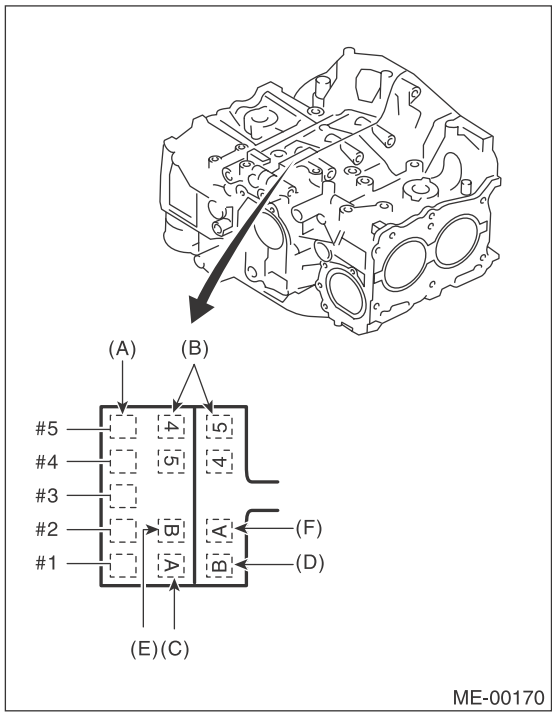

(A) Main journal size mark
(B) Cylinder block (RH) — (LH) combination mark
(C) #1 cylinder bore size mark
(D) #2 cylinder bore size mark
(E) #3 cylinder bore size mark
(F) #4 cylinder bore size mark

2) Measure inner diameter of each cylinder.
Measure the inner diameter of each cylinder in both the thrust and piston pin directions at the heights as shown in the figure, using a cylinder bore gauge.

NOTE:
Measurement should be performed at a temperature of 20°C (68°F).

Taper:
Standard
0.015 mm (0.0006 in)

0.50 mm (0.0197 in) oversize:
100,000 — 100.020 mm (3.9370 — 3.9378 in)

Out-of-roundness:
Standard
0.010 mm (0.0004 in)

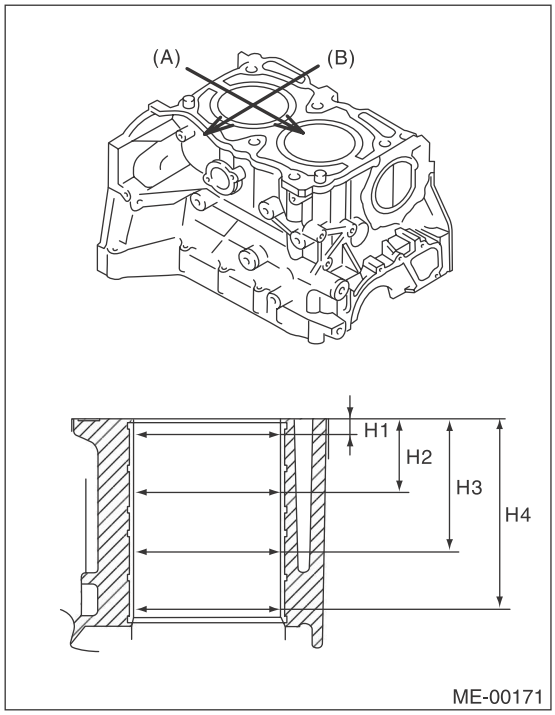

(A) Piston pin direction
(B) Thrust direction
H1 10 mm (0.39 in)
H2 45 mm (1.77 in)
H3 80 mm (3.15 in)
H4 115 mm (4.53 in)

3) When the piston is to be replaced due to general or cylinder wear, select a suitable sized piston by measuring the piston clearance.
4) Measure outer diameter of each piston.
Measure the outer diameter of each piston at the height as shown in the figure. (Thrust direction)

NOTE:
Measurement should be performed at a temperature of 20°C (68°F).

Piston grade point H:
38.2 mm (1.504 in)

Piston outer diameter:

Standard
A: 99.510 — 99.520 mm (3.9177 — 3.9181 in)
B: 99.500 — 99.510 mm (3.9173 — 3.9177 in)

0.25 mm (0.0098 in) oversize:
99.750 — 99.770 mm (3.9272 — 3.9280 in)

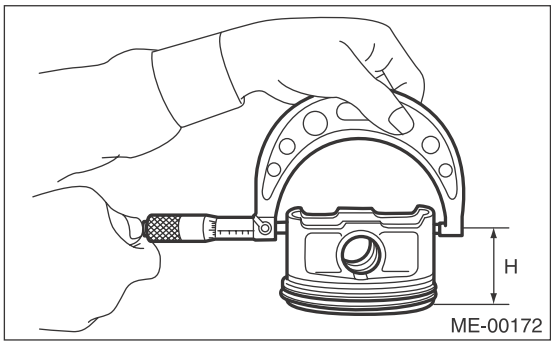

5) Calculate the clearance between cylinder and piston.

NOTE:
Measurement should be performed at a temperature of 20°C (68°F).

Cylinder to piston clearance at 20°C (68°F):
Standard
–0.015 — 0.005 mm (–0.00059 — 0.00020 in)

6) Boring and honing
(1) If any of the measured value of taper, out-of-roundness or cylinder-to-piston clearance is out of standard or if there is any damage on the cylinder wall, rebore it to replace with an oversize piston.

CAUTION:
When any of the cylinders needs reboring, all other cylinders must be bored at the same time, and replaced with oversize pistons.

(2) If the cylinder inner diameter exceeds the limit after boring and honing, replace the cylinder block.

NOTE:
Immediately after reboring, the cylinder diameter may differ from its real diameter due to temperature rise. Thus, when measuring the cylinder diameter, wait until it has cooled to room temperature.

Cylinder inner diameter boring limit
To 100.005 mm (3.9372 in)

3. PISTON AND PISTON PIN

1) Check the piston and piston pin for damage, cracks or wear. Replace if faulty.
2) Check the piston ring groove for wear or damage. Replace if faulty.
3) Make sure the piston pin can be inserted into the piston pin hole by a thumb at 20°C (68°F). Replace if faulty.

Clearance between piston pin hole and piston pin:
Standard
0.004 — 0.008 mm (0.0002 — 0.0003 in)

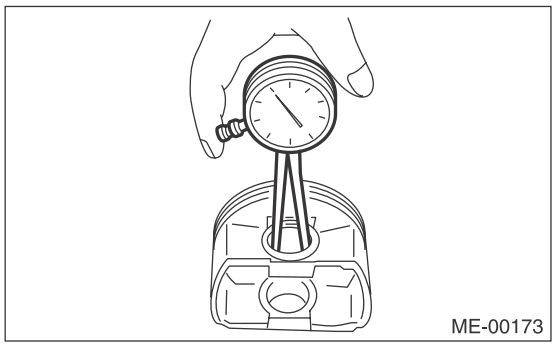

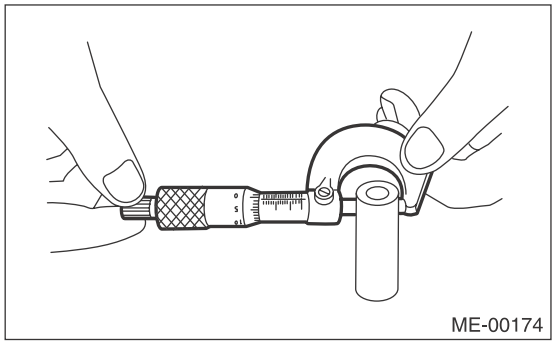

4) Check the snap ring installation groove (A) on the piston for burr. If necessary, remove burr from the groove so that the piston pin can lightly move.

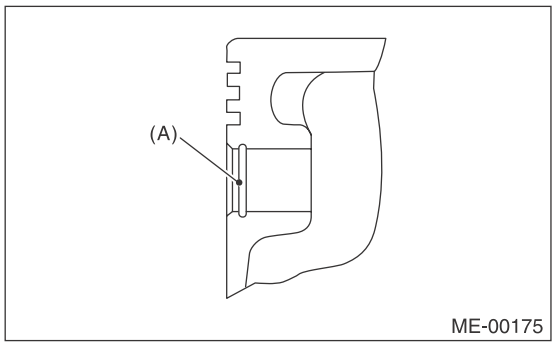

5) Check the piston pin snap ring for distortion, cracks and wear.

4. PISTON RING

1) If the piston ring is broken, damaged or worn, or if its tension is insufficient, or when the piston is replaced, replace the piston ring with a new part of the same size as piston.

NOTE:
• The top ring and second ring have the mark to determine the direction for installing. When attaching the ring to the piston, face these marks towards the top side.
• Oil ring consists of the upper rail, expander and lower rail. When attaching the oil ring to the piston, pay attention to the direction of each rail.

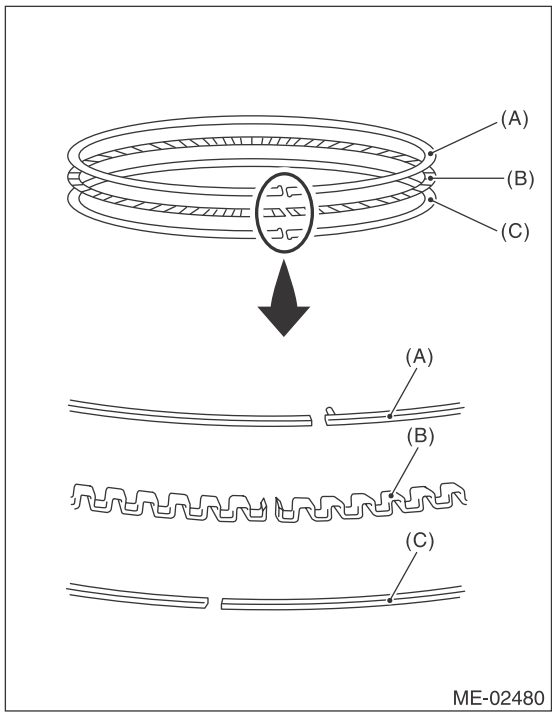

(A) Upper rail
(B) Expander
(C) Lower rail

2) Using the piston, insert the piston ring and oil ring into the cylinder so that they are perpendicular to the cylinder wall, and measure the piston ring gap with a thickness gauge.

		Standard mm (in)
Piston ring gap	Top ring	0.20 — 0.35 (0.0079 — 0.0138)
	Second ring	0.37 — 0.52 (0.0146 — 0.0205)
	Oil ring rail	0.20 — 0.50 (0.0079 — 0.0197)

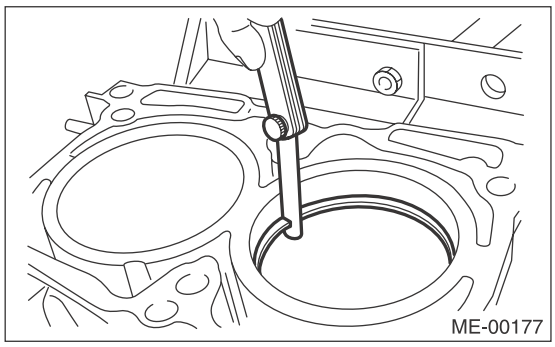

3) Fit the piston ring straight into the piston ring groove, then measure the clearance between piston ring and piston ring groove with a thickness gauge.

NOTE:
Before measuring the clearance, clean the piston ring groove and piston ring.

		Standard mm (in)
Clearance between piston ring and piston ring groove	Top ring	0.040 — 0.080 (0.0016 — 0.0031)
	Second ring	0.030 — 0.070 (0.0012 — 0.0028)

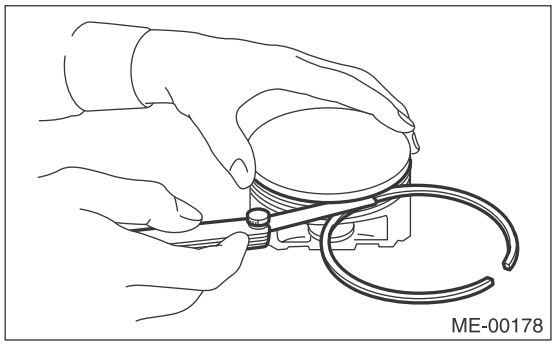

5. CONNECTING ROD

1) Replace the connecting rod, if the large or small end thrust surface is damaged.
2) Check for bend or twist using a connecting rod aligner. Replace the connecting rod if the bend or twist exceeds the limit.

Limit of bend or twist per 100 mm (3.94 in) in length:
0.10 mm (0.0039 in)

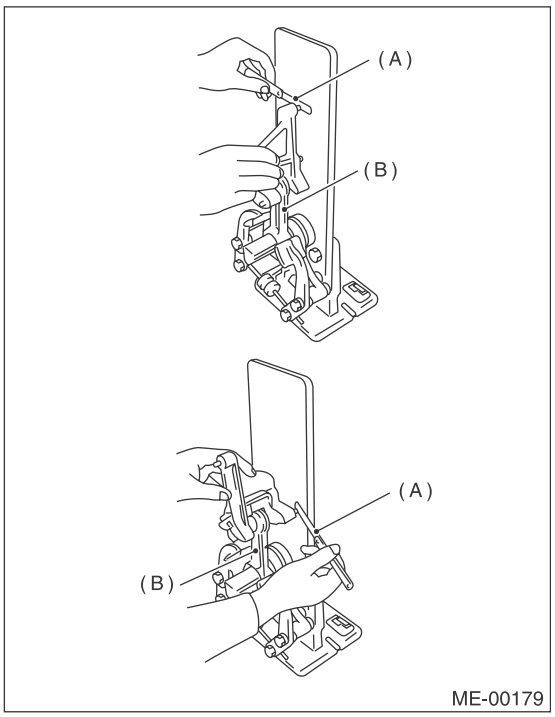

(A) Thickness gauge
(B) Connecting rod

3) Install the connecting rod with bearings attached to the crankshaft, and using a thickness gauge, measure the thrust clearance. If the thrust clearance exceeds the standard or uneven wear is found, replace the connecting rod.

Connecting rod thrust clearance:
Standard
0.070 — 0.330 mm (0.0028 — 0.0130 in)

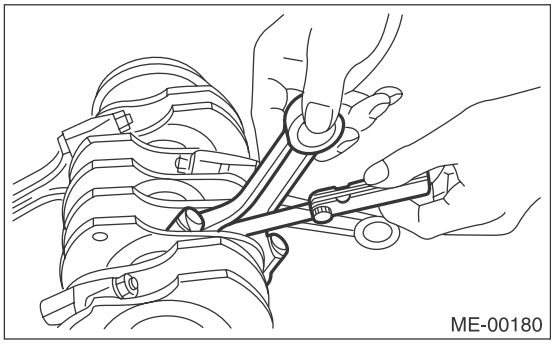

4) Inspect the connecting rod bearing for scar, peeling, seizure, melting, wear, etc.

5) Measure the oil clearance on each connecting rod bearing using plastigauge. If any oil clearance is not within the standard, replace the defective bearing with a new part of standard size or undersize as necessary.

Connecting rod oil clearance:
Standard
0.016 — 0.044 mm (0.0006 — 0.0017 in)

Unit: mm (in)

Bearing	Bearing size (Thickness at center)	Outer diameter of crank pin
Standard	1.492 — 1.501 (0.0587 — 0.0591)	51.984 — 52.000 (2.0466 — 2.0472)
0.03 (0.0012) Undersize	1.510 — 1.513 (0.0594 — 0.0596)	51.954 — 51.970 (2.0454 — 2.0461)
0.05 (0.0020) Undersize	1.520 — 1.523 (0.0598 — 0.0600)	51.934 — 51.950 (2.0446 — 2.0453)
0.25 (0.0098) Undersize	1.620 — 1.623 (0.0638 — 0.0639)	51.734 — 51.750 (2.0368 — 2.0374)

6) Inspect the bushing at connecting rod small end, and replace with a new part if worn or damaged.
7) Measure the piston pin clearance at connecting rod small end. Replace it with a new part if the value is not within the standard,

Clearance between piston pin and bushing:
Standard
0 — 0.022 mm (0 — 0.0009 in)

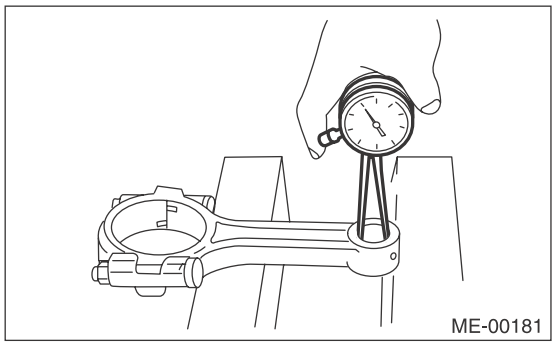

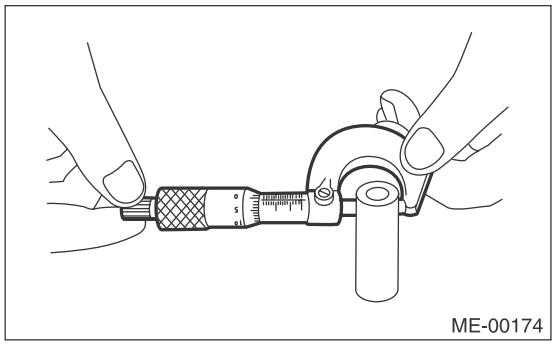

8) The replacement procedure for the connecting rod small end bushing is as follows.

(1) Remove the bushing from connecting rod with ST and press.
(2) Press the bushing with the ST after applying oil on the periphery of new bushing.

ST 499037100 CONNECTING ROD BUSHING REMOVER AND INSTALLER

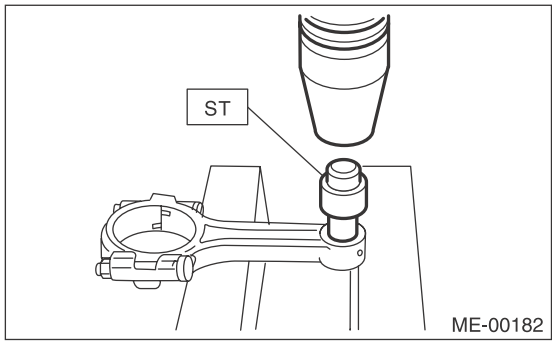

(3) Make two 3 mm (0.12 in) holes in the pressed bushing to match the pre-manufactured holes on the connecting rod, then ream the inside of the bushing.
(4) After completion of reaming, clean the bushing to remove chips.

6. CRANKSHAFT AND CRANKSHAFT BEARING

1) Clean the crankshaft completely, and check it for cracks using liquid penetrant tester. If defective, replace the crankshaft.
2) Measure warping of the crankshaft. If it exceeds the limit, correct or replace it.

NOTE:
If a suitable V-block is not available, using just the #1 and #5 crankshaft bearings on cylinder block, position the crankshaft on cylinder block. Then, measure the crankshaft bend using a dial gauge.

Crankshaft bend limit:
0.035 mm (0.0014 in)

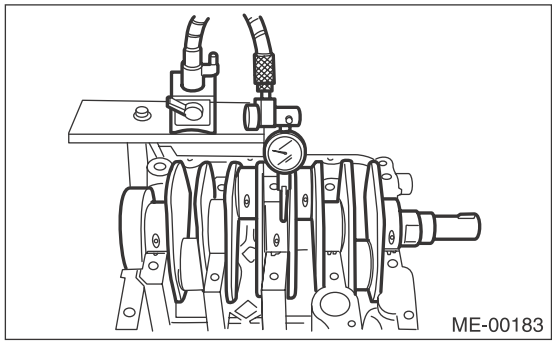

3) Inspect the crank journal and crank pin for wear. If they are not within the standard, replace the bearing with a suitable (undersize) one, and replace or grind to correct the crankshaft as necessary. When grinding the crank journal or crank pin, finish them to the specified dimensions according to the undersize bearing to be used.

Crank pin
Out-of-roundness
0.003 mm (0.0001 in)
Cylindricality
0.004 mm (0.0002 in)
Grinding limit (dia.)
To 51.750 mm (2.0374 in)

Crank journal
Out-of-roundness
0.005 mm (0.0002 in)
Cylindricality
0.006 mm (0.0002 in)
Grinding limit (dia.)
To 59.758 mm (2.3527 in)

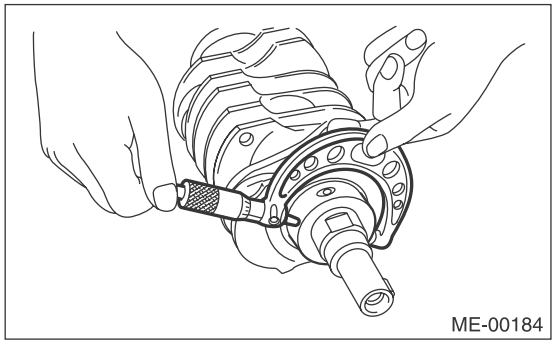

Unit: mm (in)

		Crank journal outer diameter		Crank pin outer diameter
		#1, #3	#2, #4, #5	
Standard	Journal O.D.	59.992 — 60.008 (2.3619 — 2.3625)	59.992 — 60.008 (2.3619 — 2.3625)	51.984 — 52.000 (2.0466 — 2.0472)
	Bearing size (Thickness at center)	1.998 — 2.011 (0.0787 — 0.0792)	2.000 — 2.013 (0.0787 — 0.0793)	1.492 — 1.501 (0.0587 — 0.0591)
0.03 (0.0012) Undersize	Journal O.D.	59.962 — 59.978 (2.3607 — 2.3613)	59.962 — 59.978 (2.3607 — 2.3613)	51.954 — 51.970 (2.0454 — 2.0461)
	Bearing size (Thickness at center)	2.017 — 2.020 (0.0794 — 0.0795)	2.019 — 2.022 (0.0795 — 0.0796)	1.510 — 1.513 (0.0594 — 0.0596)
0.05 (0.0020) Undersize	Journal O.D.	59.942 — 59.958 (2.3599 — 2.3605)	59.942 — 59.958 (2.3599 — 2.3605)	51.934 — 51.950 (2.0446 — 2.0453)
	Bearing size (Thickness at center)	2.027 — 2.030 (0.0798 — 0.0799)	2.029 — 2.032 (0.0799 — 0.0800)	1.520 — 1.523 (0.0598 — 0.0600)
0.25 (0.0098) Undersize	Journal O.D.	59.742 — 59.758 (2.3520 — 2.3527)	59.742 — 59.758 (2.3520 — 2.3527)	51.734 — 51.750 (2.0368 — 2.0374)
	Bearing size (Thickness at center)	2.127 — 2.130 (0.0837 — 0.0839)	2.129 — 2.132 (0.0838 — 0.0839)	1.620 — 1.623 (0.0638 — 0.0639)

4) Use a thickness gauge to measure the thrust clearance of crankshaft at #5 crank journal bearing. If clearance exceeds the standard, replace the bearing.

Crankshaft thrust clearance:
Standard
0.030 — 0.115 mm (0.0012 — 0.0045 in)

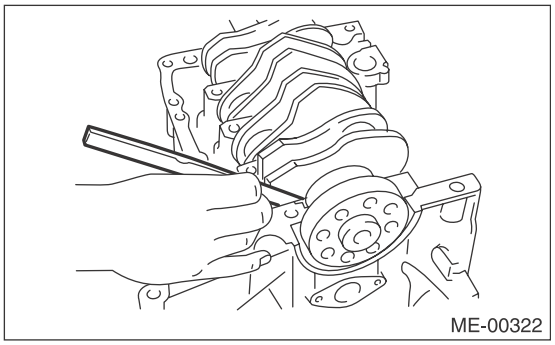
ME-00322

5) Inspect individual crankshaft bearings for signs of flaking, seizure, melting and wear.
6) Measure the oil clearance on each crankshaft bearing using plastigauge. If the measured value is out of standard, replace the defective bearing with an undersize one, and replace or grind to correct the crankshaft as necessary.

Crankshaft oil clearance:
Standard
0.010 — 0.030 mm (0.0004 — 0.0012 in)

22.Oil Switching Solenoid Valve

A: REMOVAL

1. RH SIDE

1) Disconnect the ground cable from battery.

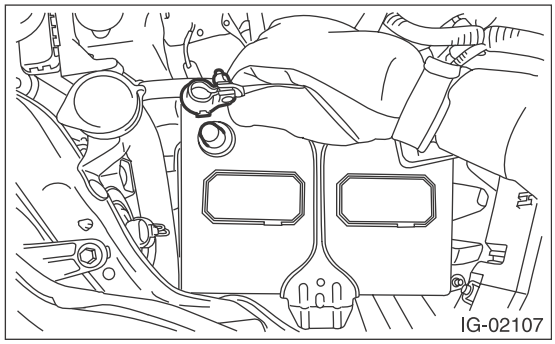

2) Remove the air intake boot assembly. <Ref. to IN(H4SO)-8, REMOVAL, Air Intake Boot.>
3) Remove the bolt, and disconnect the bulkhead harness connector from the engine harness connector and rear engine hanger.

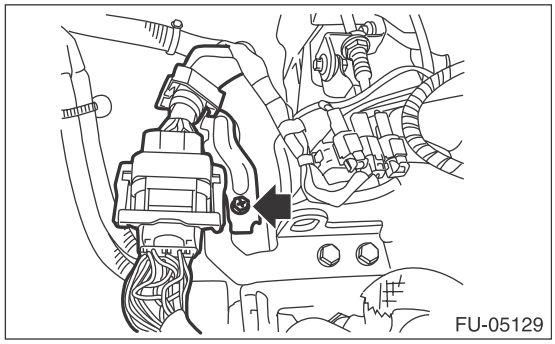

4) Slide the engine harness connector in the direction of the arrow and remove it from the rear engine hanger.

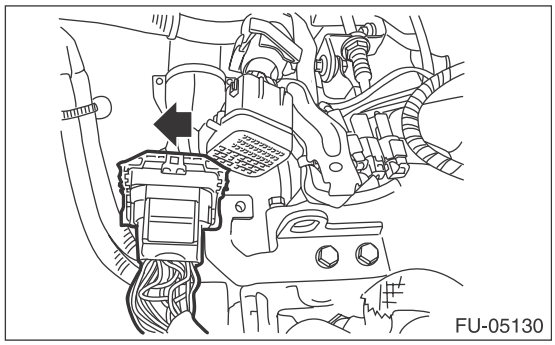

5) Disconnect the connector from the oil switching solenoid valve.
6) Remove the oil switching solenoid valve.
7) Remove the variable valve lift diagnosis oil pressure switch. <Ref. to FU(H4SO)-33, REMOVAL, Variable Valve Lift Diagnosis Oil Pressure Switch.>
8) Remove the oil temperature sensor. <Ref. to FU(H4SO)-34, REMOVAL, Oil Temperature Sensor.>
9) Remove the oil switching solenoid valve holder from the cylinder head.

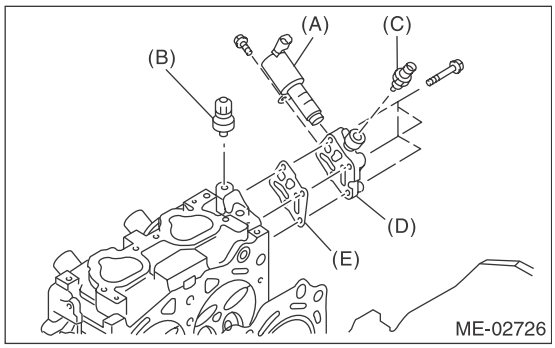

(A) Oil switching solenoid valve
(B) Variable valve lift diagnosis oil pressure switch
(C) Oil temperature sensor
(D) Oil switching solenoid valve holder
(E) Gasket

2. LH SIDE

1) Disconnect the ground cable from battery.

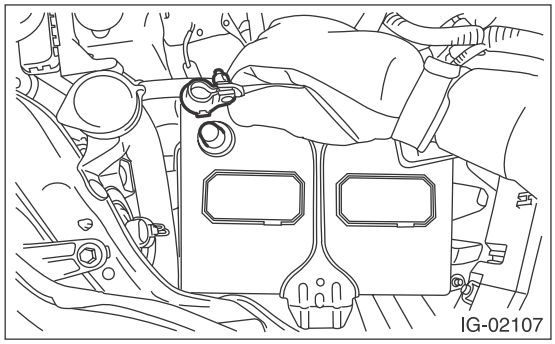

2) Remove the V-belts. <Ref. to ME(H4SO)-42, REMOVAL, V-belt.>
3) Remove the crank pulley. <Ref. to ME(H4SO)-44, REMOVAL, Crank Pulley.>
4) Remove the timing belt cover. <Ref. to ME(H4SO)-46, REMOVAL, Timing Belt Cover.>
5) Remove the timing belt. <Ref. to ME(H4SO)-47, REMOVAL, Timing Belt.>
6) Remove the cam sprocket. <Ref. to ME(H4SO)-52, REMOVAL, Cam Sprocket.>
7) Remove the timing belt cover No. 2 LH.
8) Disconnect the connector from the oil switching solenoid valve.
9) Remove the oil switching solenoid valve.
10) Remove the variable valve lift diagnosis oil pressure switch. <Ref. to FU(H4SO)-33, REMOVAL, Variable Valve Lift Diagnosis Oil Pressure Switch.>

11) Remove the oil switching solenoid valve holder from the cylinder head.

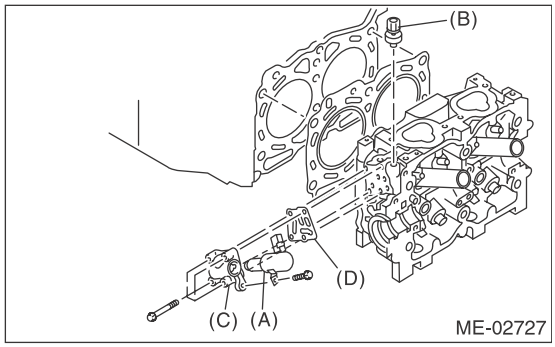

(A) Oil switching solenoid valve
(B) Variable valve lift diagnosis oil pressure switch
(C) Oil switching solenoid valve holder
(D) Gasket

B: INSTALLATION

1. RH SIDE

Install in the reverse order of removal.

NOTE:
• Use a new gasket.
• Apply liquid gasket to variable valve lift diagnosis oil pressure switch threads.
• Install the oil switching solenoid valve to the holder, then install it to the cylinder head.

Tightening torque:
T1: 6.4 N·m (0.7 kgf-m, 4.7 ft-lb)
T2: 10 N·m (1.0 kgf-m, 7.4 ft-lb)
T3: 17 N·m (1.7 kgf-m, 12.5 ft-lb)
T4: 18 N·m (1.8 kgf-m, 13.3 ft-lb)

Liquid gasket:
THREE BOND 1324 (Part No. 004403042) or equivalent

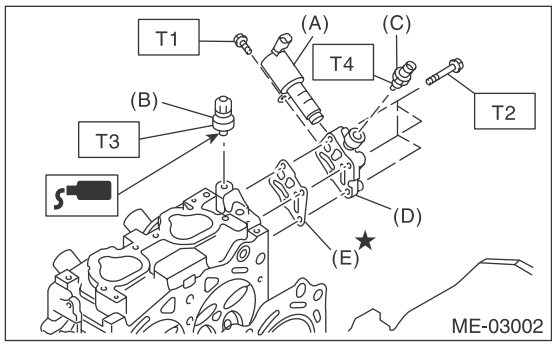

(A) Oil switching solenoid valve
(B) Variable valve lift diagnosis oil pressure switch
(C) Oil temperature sensor
(D) Oil switching solenoid valve holder
(E) Gasket

Tightening torque:
6.4 N·m (0.7 kgf-m, 4.7 ft-lb)

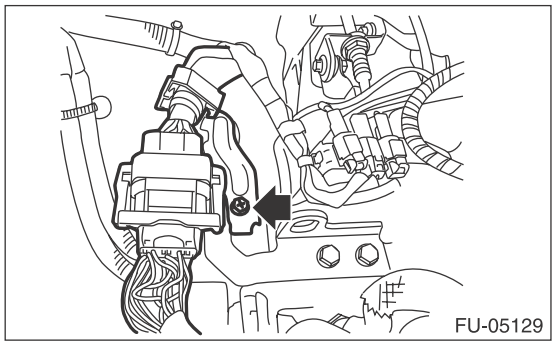

2. LH SIDE

Install in the reverse order of removal.

NOTE:
• Use a new gasket.
• Apply liquid gasket to variable valve lift diagnosis oil pressure switch threads.
• Install the oil switching solenoid valve to the holder, then install it to the cylinder head.

Tightening torque:
T1: 6.4 N·m (0.7 kgf-m, 4.7 ft-lb)
T2: 10 N·m (1.0 kgf-m, 7.4 ft-lb)
T3: 17 N·m (1.7 kgf-m, 12.5 ft-lb)

Liquid gasket:
THREE BOND 1324 (Part No. 004403042) or equivalent

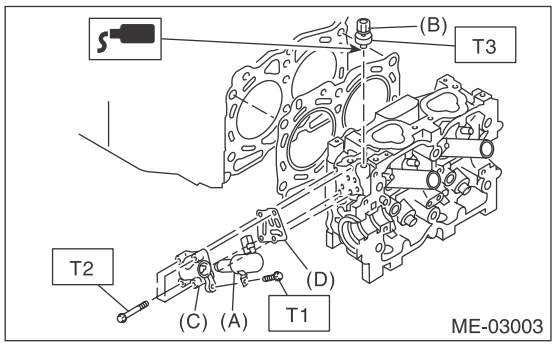

(A) Oil switching solenoid valve
(B) Variable valve lift diagnosis oil pressure switch
(C) Oil switching solenoid valve holder
(D) Gasket

23.Intake and Exhaust Valve

A: SPECIFICATION

Refer to “Cylinder Head” for removal and installation procedures of the intake and exhaust valves. <Ref. to ME(H4SO)-61, REMOVAL, Cylinder Head.> <Ref. to ME(H4SO)-61, INSTALLATION, Cylinder Head.>

24.Piston

A: SPECIFICATION

Refer to “Cylinder Block” for removal and installation procedures of pistons. <Ref. to ME(H4SO)-69, REMOVAL, Cylinder Block.> <Ref. to ME(H4SO)-73, INSTALLATION, Cylinder Block.>

25.Connecting Rod

A: SPECIFICATION

Refer to “Cylinder Block” for removal and installation procedures of connecting rods. <Ref. to ME(H4SO)-69, REMOVAL, Cylinder Block.> <Ref. to ME(H4SO)-73, INSTALLATION, Cylinder Block.>

26.Crankshaft

A: SPECIFICATION

Refer to “Cylinder Block” for removal and installation procedures of the crankshaft. <Ref. to ME(H4SO)-69, REMOVAL, Cylinder Block.> <Ref. to ME(H4SO)-73, INSTALLATION, Cylinder Block.>

27.Engine Trouble in General

A: INSPECTION

NOTE:
The “RANK” shown in the chart shows the possibilities of the cause of trouble in order from “Very often” to “Rarely”.
A — Very often
B — Sometimes
C — Rarely

Symptoms	Problem parts etc.	Possible cause	RANK
1. Engine does not start.			
1) Starter does not turn.	Starter	Defective battery-to-starter harness	B
		Defective starter switch	C
		Defective inhibitor switch	C
		Defective starter	B
	Battery	Improper connection of terminal	A
		Run-down battery	A
		Defective charging system	B
	Friction	Seizure of crankshaft and connecting rod bearing	C
		Seized camshaft	C
		Seized or stuck piston and cylinder	C
	Immobilizer system <Ref. to IM(diag)-2, Basic Diagnostic Procedure.>		A
2) Initial combustion does not occur.	Starter	Defective starter	C
	Engine control system <Ref. to EN(H4SO)(diag)-2, Basic Diagnostic Procedure.>		A
	Fuel line	Defective fuel pump and relay	A
		Clogged fuel line	C
		Lack of fuel or insufficient fuel	B
	Timing belt	Degradation, etc.	B
		Defective timing	B
	Compression	Incorrect valve clearance	C
		Loosened spark plug or defective gasket	C
		Loosened cylinder head bolt or defective cylinder head gasket	C
		Improper valve sealing	C
		Defective valve stem	C
		Worn or broken valve spring	B
		Worn or stuck piston rings, cylinder and piston	C
		Incorrect valve timing	B
		Improper engine oil (low viscosity)	B

Symptoms	Problem parts etc.	Possible cause	RANK
3) Initial combustion occurs.	Engine control system <Ref. to EN(H4SO)(diag)-2, Basic Diagnostic Procedure.>		A
	Intake system	Defective intake manifold gasket	B
		Defective throttle body gasket	B
	Fuel line	Defective fuel pump and relay	C
		Clogged fuel line	C
		Lack of fuel or insufficient fuel	B
	Timing belt	Degradation, etc.	B
		Defective timing	B
	Compression	Incorrect valve clearance	C
		Loosened spark plug or defective gasket	C
		Loosened cylinder head bolt or defective cylinder head gasket	C
		Improper valve sealing	C
		Defective valve stem	C
		Worn or broken valve spring	B
		Worn or stuck piston rings, cylinder and piston	C
		Incorrect valve timing	B
		Improper engine oil (low viscosity)	B
4) Engine stalls after initial combustion.	Engine control system <Ref. to EN(H4SO)(diag)-2, Basic Diagnostic Procedure.>		A
	Intake system	Loosened or cracked intake duct	B
		Loosened or cracked PCV hose	C
		Loosened or cracked vacuum hose	C
		Defective intake manifold gasket	B
		Defective throttle body gasket	B
		Dirty air cleaner element	C
	Fuel line	Clogged fuel line	C
		Lack of fuel or insufficient fuel	B
	Timing belt	Degradation, etc.	B
		Defective timing	B
	Compression	Incorrect valve clearance	C
		Loosened spark plug or defective gasket	C
		Loosened cylinder head bolt or defective cylinder head gasket	C
		Improper valve sealing	C
		Defective valve stem	C
		Worn or broken valve spring	B
		Worn or stuck piston rings, cylinder and piston	C
		Incorrect valve timing	B
		Improper engine oil (low viscosity)	B

Symptoms	Problem parts etc.	Possible cause	RANK
2. Rough idle and engine stall	Engine control system <Ref. to EN(H4SO)(diag)-2, Basic Diagnostic Procedure.>		A
	Intake system	Loosened or cracked intake duct	A
		Loosened or cracked PCV hose	A
		Loosened or cracked vacuum hose	A
		Defective intake manifold gasket	B
		Defective throttle body gasket	B
		Defective PCV valve	C
		Loosened oil filler cap	B
		Dirty air cleaner element	C
	Fuel line	Defective fuel pump and relay	C
		Clogged fuel line	C
		Lack of fuel or insufficient fuel	B
	Timing belt	Defective timing	C
	Compression	Incorrect valve clearance	B
		Loosened spark plug or defective gasket	B
		Loosened cylinder head bolt or defective cylinder head gasket	B
		Improper valve sealing	B
		Defective valve stem	C
		Worn or broken valve spring	B
		Worn or stuck piston rings, cylinder and piston	B
		Incorrect valve timing	A
		Improper engine oil (low viscosity)	B
	Lubrication system	Incorrect oil pressure	B
		Defective rocker cover gasket	C
	Cooling system	Over-heating	C
	Others	Evaporative emission control system malfunction	A
		Stuck or damaged throttle valve	B

Symptoms	Problem parts etc.	Possible cause	RANK
3. Low output, hesitation and poor acceleration	Engine control system <Ref. to EN(H4SO)(diag)-2, Basic Diagnostic Procedure.>		A
	Intake system	Loosened or cracked intake duct	A
		Loosened or cracked PCV hose	A
		Loosened or cracked vacuum hose	B
		Defective intake manifold gasket	B
		Defective throttle body gasket	B
		Defective PCV valve	B
		Loosened oil filler cap	B
		Dirty air cleaner element	A
	Fuel line	Defective fuel pump and relay	B
		Clogged fuel line	B
		Lack of fuel or insufficient fuel	C
	Timing belt	Defective timing	B
	Compression	Incorrect valve clearance	B
		Loosened spark plug or defective gasket	B
		Loosened cylinder head bolt or defective cylinder head gasket	B
		Improper valve sealing	B
		Defective valve stem	C
		Worn or broken valve spring	B
		Worn or stuck piston rings, cylinder and piston	C
		Incorrect valve timing	A
		Improper engine oil (low viscosity)	B
	Lubrication system	Incorrect oil pressure	B
	Cooling system	Over-heating	C
		Over-cooling	C
	Others	Evaporative emission control system malfunction	A

Symptoms	Problem parts etc.	Possible cause	RANK
4. Surging	Engine control system <Ref. to EN(H4SO)(diag)-2, Basic Diagnostic Procedure.>		A
	Intake system	Loosened or cracked intake duct	A
		Loosened or cracked PCV hose	A
		Loosened or cracked vacuum hose	A
		Defective intake manifold gasket	B
		Defective throttle body gasket	B
		Defective PCV valve	B
		Loosened oil filler cap	B
		Dirty air cleaner element	B
	Fuel line	Defective fuel pump and relay	B
		Clogged fuel line	B
		Lack of fuel or insufficient fuel	C
	Timing belt	Defective timing	B
	Compression	Incorrect valve clearance	B
		Loosened spark plug or defective gasket	C
		Loosened cylinder head bolt or defective cylinder head gasket	C
		Improper valve sealing	C
		Defective valve stem	C
		Worn or broken valve spring	C
		Worn or stuck piston rings, cylinder and piston	C
		Incorrect valve timing	A
		Improper engine oil (low viscosity)	B
	Cooling system	Over-heating	B
	Others	Evaporative emission control system malfunction	C
5. Engine does not return to idle.	Engine control system <Ref. to EN(H4SO)(diag)-2, Basic Diagnostic Procedure.>		A
	Intake system	Loosened or cracked vacuum hose	A
	Others	Stuck or damaged throttle valve	A
6. Dieseling (Run-on)	Engine control system <Ref. to EN(H4SO)(diag)-2, Basic Diagnostic Procedure.>		A
	Cooling system	Over-heating	B
	Others	Evaporative emission control system malfunction	B
7. After burning in exhaust system	Engine control system <Ref. to EN(H4SO)(diag)-2, Basic Diagnostic Procedure.>		A
	Intake system	Loosened or cracked intake duct	C
		Loosened or cracked PCV hose	C
		Loosened or cracked vacuum hose	B
		Defective PCV valve	B
		Loosened oil filler cap	C
	Timing belt	Defective timing	B
	Compression	Incorrect valve clearance	B
		Loosened spark plug or defective gasket	C
		Loosened cylinder head bolt or defective cylinder head gasket	C
		Improper valve sealing	B
		Defective valve stem	C
		Worn or broken valve spring	C
		Worn or stuck piston rings, cylinder and piston	C
		Incorrect valve timing	A
	Lubrication system	Incorrect oil pressure	C
	Cooling system	Over-cooling	C
	Others	Evaporative emission control system malfunction	C

Symptoms	Problem parts etc.	Possible cause	RANK
8. Knocking	Engine control system <Ref. to EN(H4SO)(diag)-2, Basic Diagnostic Procedure.>		A
	Intake system	Loosened oil filler cap	B
	Timing belt	Defective timing	B
	Compression	Incorrect valve clearance	C
		Incorrect valve timing	B
	Cooling system	Over-heating	A
9. Excessive engine oil consumption	Intake system	Loosened or cracked PCV hose	A
		Defective PCV valve	B
		Loosened oil filler cap	C
	Compression	Defective valve stem	A
		Worn or stuck piston rings, cylinder and piston	A
	Lubrication system	Loosened oil pump attaching bolts and defective gasket	B
		Defective oil filter gasket	B
		Defective crankshaft oil seal	B
		Defective rocker cover gasket	B
		Loosened oil drain plug or defective gasket	B
		Loosened oil pan fitting bolts or defective oil pan	B
10. Excessive fuel consumption	Engine control system <Ref. to EN(H4SO)(diag)-2, Basic Diagnostic Procedure.>		A
	Intake system	Dirty air cleaner element	A
	Timing belt	Defective timing	B
	Compression	Incorrect valve clearance	B
		Loosened spark plug or defective gasket	C
		Loosened cylinder head bolt or defective cylinder head gasket	C
		Improper valve sealing	B
		Defective valve stem	C
		Worn or broken valve spring	C
		Worn or stuck piston rings, cylinder and piston	B
		Incorrect valve timing	B
	Lubrication system	Incorrect oil pressure	C
	Cooling system	Over-cooling	C

28.Engine Noise

A: INSPECTION

Type of sound	Condition	Possible cause
Regular clicking sound	Sound increases as engine speed increases.	• Valve mechanism is defective. • Incorrect valve clearance • Worn valve rocker • Worn camshaft • Broken valve spring
Heavy and dull clank	Oil pressure is low.	• Worn crankshaft main bearing • Worn connecting rod bearing (large end)
	Oil pressure is normal.	• Damaged engine mounting • Loosened flywheel mounting bolt
High-pitched clank (Spark knock)	Sound is noticeable when accelerating with an overload condition.	• Ignition timing advanced • Accumulation of carbon inside combustion chamber • Wrong heat range of spark plug • Improper octane value gasoline
Clank when engine speed is 1,000 to 2,000 rpm	Sound is reduced when fuel injector connector of noisy cylinder is disconnected. *	• Worn crankshaft main bearing • Worn connecting rod bearing (large end)
Knocking sound when engine is operating under idling speed and engine is warm	Sound is reduced when fuel injector connector of noisy cylinder is disconnected. *	• Worn cylinder liner and piston ring • Broken or stuck piston ring • Worn piston pin and hole at piston end of connecting rod
	Sound is not reduced if each fuel injector connector is disconnected in turn. *	• Worn cam sprocket • Worn camshaft journal bore in cylinder head
Squeaky sound	—	Insufficient generator lubrication
Rubbing sound	—	Poor contact of generator brush and rotor
Gear scream when starting engine	—	• Defective ignition starter switch • Worn gear and starter pinion
Sound like polishing glass with a dry cloth	—	• Loose V-belt • Defective water pump shaft
Hissing sound	—	• Insufficient compression • Air leakage in air intake system, hose, connection or manifold
Timing belt noise	—	• Loose timing belt • Timing belt contacting with adjacent part
Valve noise	—	Incorrect valve clearance

* When disconnecting the fuel injector connector, the malfunction indicator light illuminates and DTC is stored in ECM memory. Therefore, perform the Clear Memory Mode <Ref. to EN(H4SO)(diag)-54, OPERATION, Clear Memory Mode.> and Inspection Mode <Ref. to EN(H4SO)(diag)-42, PROCEDURE, Inspection Mode.> after connecting the fuel injector connector.

EXHAUST

EX(H4SO)

Page

1. General Description 2
2. Front Exhaust Pipe 4
3. Center Exhaust Pipe 7
4. Rear Exhaust Pipe 8
5. Muffler 9

1. General Description

A: COMPONENT

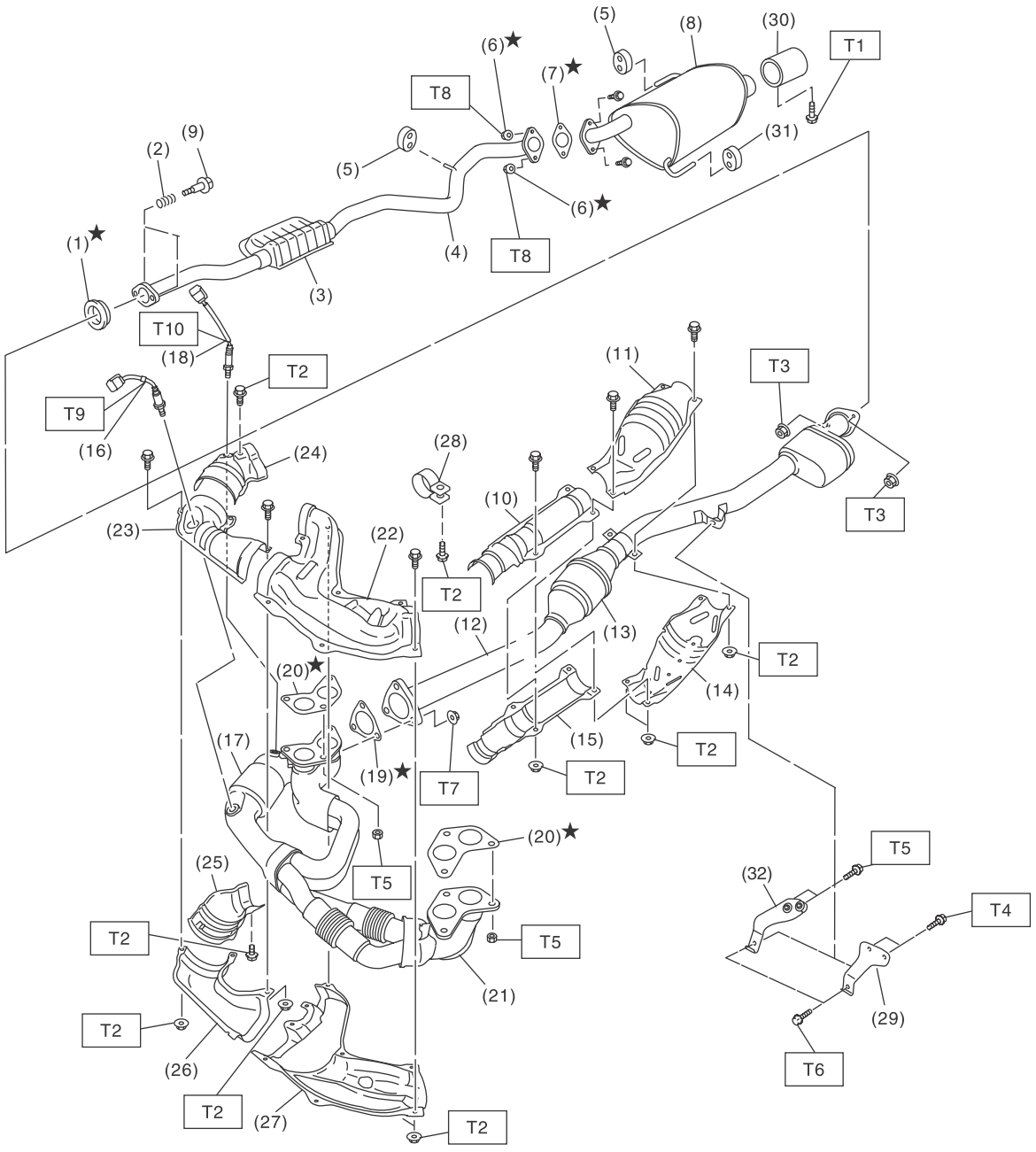

(1) Gasket
(2) Spring
(3) Chamber
(4) Rear exhaust pipe
(5) Cushion rubber (without protrusion)
(6) Self-locking nut
(7) Gasket
(8) Muffler
(9) BOLT
(10) Center exhaust pipe front upper cover
(11) Rear catalytic converter upper cover
(12) Center exhaust pipe
(13) Rear catalytic converter
(14) Rear catalytic converter lower cover
(15) Center exhaust pipe front lower cover
(16) Front oxygen (A/F) sensor
(17) Front catalytic converter
(18) Rear oxygen sensor
(19) Gasket
(20) Gasket
(21) Front exhaust pipe
(22) Front exhaust pipe upper cover LH
(23) Front exhaust pipe upper cover RH
(24) Front catalytic converter upper cover
(25) Front catalytic converter lower cover
(26) Front exhaust pipe lower cover RH
(27) Front exhaust pipe lower cover LH
(28) Band
(29) Hanger bracket (CVT model)
(30) Ornamental muffler tip (Models with ornamental muffler tips)
(31) Cushion rubber (with protrusion)
(32) Hanger bracket (MT model)

Tightening torque:N·m (kgf-m, ft-lb)

T1:	***7.5 (0.8, 5.5)***
T2:	***13 (1.3, 9.6)***
T3:	***18 (1.8, 13.3)***
T4:	***23 (2.3, 17.0)***
T5:	***30 (3.1, 22.1)***
T6:	***35 (3.6, 25.8)***
T7:	***40 (4.1, 29.5)***
T8:	***48 (4.9, 35.4)***
T9:	***<Ref. to FU(H4SO)-35, INSTALLATION, Front Oxygen (A/F) Sensor.>***
T10:	***<Ref. to FU(H4SO)-37, INSTALLATION, Rear Oxygen Sensor.>***

B: CAUTION

- Wear appropriate work clothing, including a cap, protective goggles and protective shoes when performing any work.
- Remove contamination including dirt and corrosion before removal, installation or disassembly.
- Keep the disassembled parts in order and protect them from dust and dirt.
- Before removal, installation or disassembly, be sure to clarify the failure. Avoid unnecessary removal, installation, disassembly and replacement.
- Vehicle components are extremely hot after driving. Be wary of receiving burns from heated parts.
- Be sure to tighten fasteners including bolts and nuts to the specified torque.
- Place shop jacks or rigid racks at the specified points.
- Before disconnecting connectors of sensors or units, be sure to disconnect the ground cable from the battery.
- If any fat adheres to the exhaust pipe, wipe it off. Otherwise a fire may happen.

2. Front Exhaust Pipe

A: REMOVAL

CAUTION:
Vehicle components are extremely hot after driving. Be wary of receiving burns from heated parts.

1) Remove the air intake duct. <Ref. to IN(H4SO)-9, REMOVAL, Air Intake Duct.>
2) Disconnect the ground cable from battery.

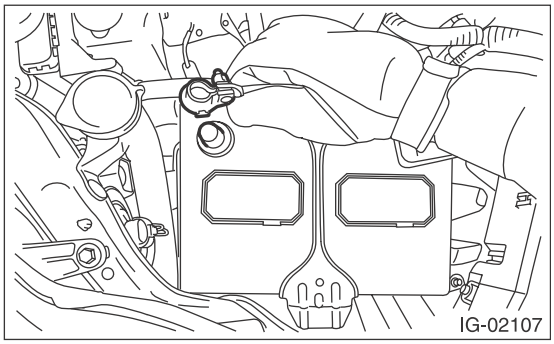

3) Disconnect the front oxygen (A/F) sensor connector (A) and rear oxygen sensor connector (B) and remove the clip (C) fastening the harness.

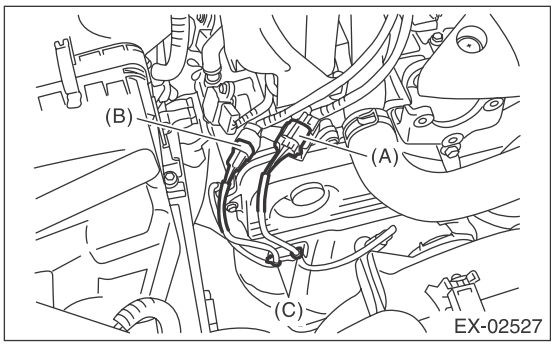

4) Lift up the vehicle.
5) Remove the under cover. <Ref. to EI-35, REMOVAL, Front Under Cover.>
6) Disconnect the center exhaust pipe from rear exhaust pipe.

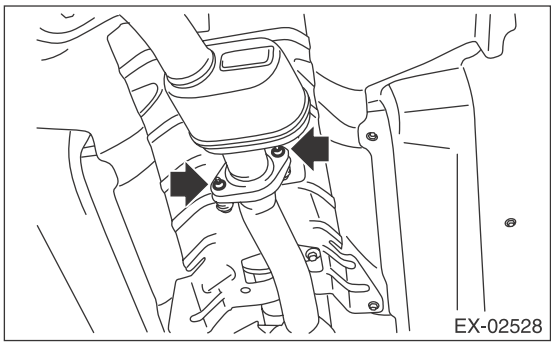

7) Remove the nuts which hold front exhaust pipe onto cylinder heads.

CAUTION:
Be careful not to drop the front exhaust pipe and center exhaust pipe assembly.

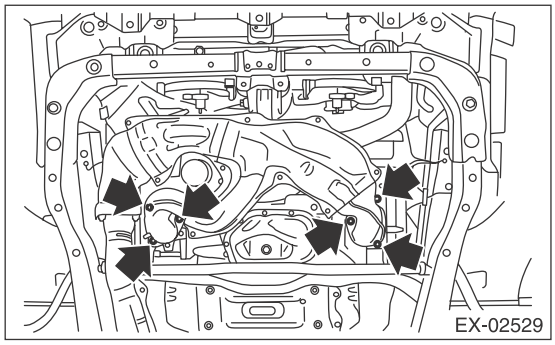

8) Remove the bolt which holds center exhaust pipe to hanger bracket.

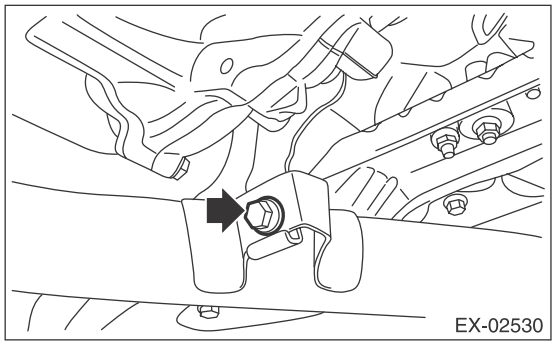

9) Remove the front exhaust pipe and center exhaust pipe as a unit from the vehicle.

CAUTION:
• The front exhaust pipe and center exhaust pipe assembly are very heavy. Be careful not to drop the exhaust pipes when removing.
• After removing the front exhaust pipe and center exhaust pipe assembly, do not pull the rear exhaust pipe with excessive force.

10) Remove the front exhaust pipe from the center exhaust pipe.

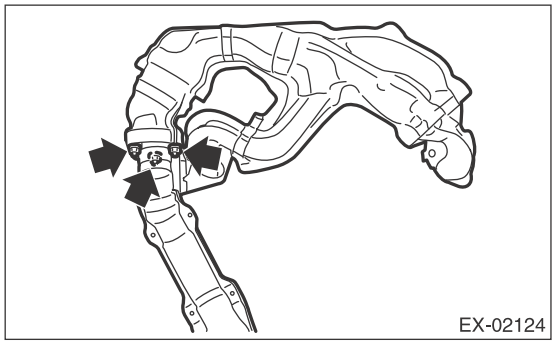

11) Remove the front oxygen (A/F) sensor and rear oxygen sensor from the front exhaust pipe. <Ref. to FU(H4SO)-35, REMOVAL, Front Oxygen (A/F) Sensor.> <Ref. to FU(H4SO)-37, REMOVAL, Rear Oxygen Sensor.>

B: INSTALLATION

1) Install the front oxygen (A/F) sensor and rear oxygen sensor to the front exhaust pipe. <Ref. to FU(H4SO)-35, INSTALLATION, Front Oxygen (A/F) Sensor.> <Ref. to FU(H4SO)-37, INSTALLATION, Rear Oxygen Sensor.>
2) Install the front exhaust pipe to the center exhaust pipe.

NOTE:
Use a new gasket.

Tightening torque:
40 N·m (4.1 kgf-m, 29.5 ft-lb)

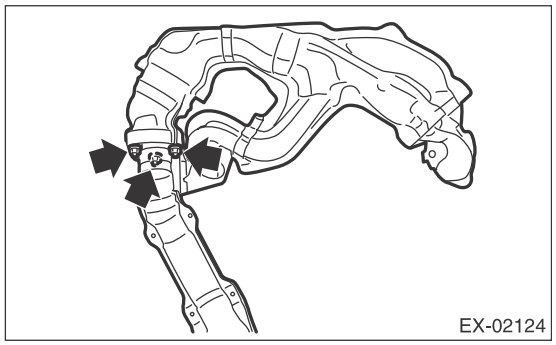

3) Install the front exhaust pipe and center exhaust pipe as a unit to the vehicle.

NOTE:
Use a new gasket.
4) Temporarily tighten the nuts which hold front exhaust pipe to cylinder heads.

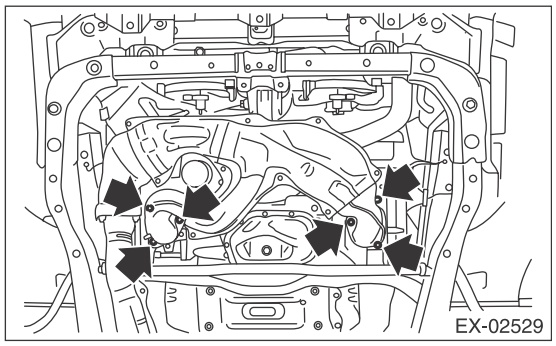

5) Install the center exhaust pipe to rear exhaust pipe.

NOTE:
Use a new gasket.

Tightening torque:
18 N·m (1.8 kgf-m, 13.3 ft-lb)

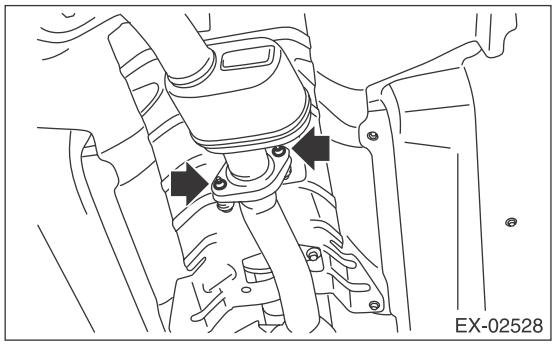

6) Tighten the bolts which hold center exhaust pipe to hanger bracket.

Tightening torque:
35 N·m (3.6 kgf-m, 25.8 ft-lb)

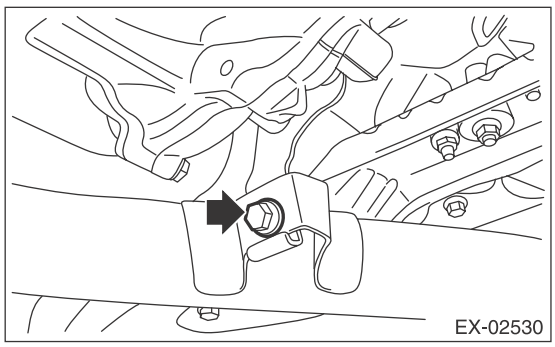

7) Tighten the nuts which hold front exhaust pipe to cylinder heads.

Tightening torque:
30 N·m (3.1 kgf-m, 22.1 ft-lb)

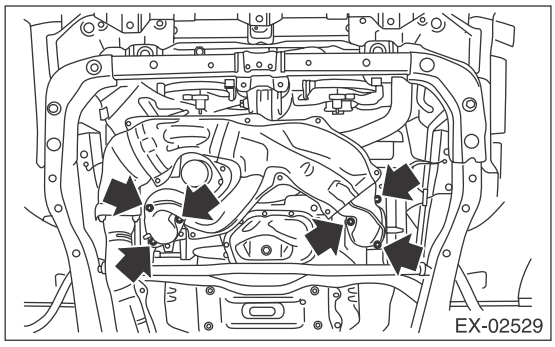

8) Install the under cover. <Ref. to EI-35, INSTALLATION, Front Under Cover.>
9) Lower the vehicle.

10) Connect the front oxygen (A/F) sensor connector (A) and rear oxygen sensor connector (B), and fasten the harness with the clip (C).

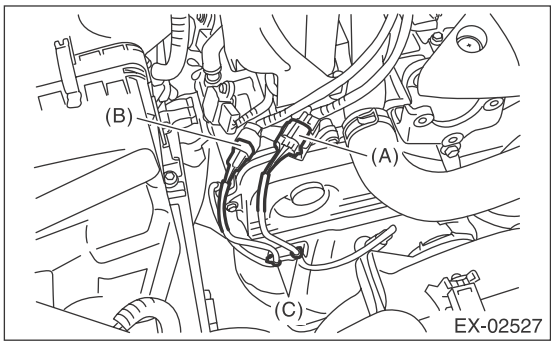

11) Connect the ground cable to battery.

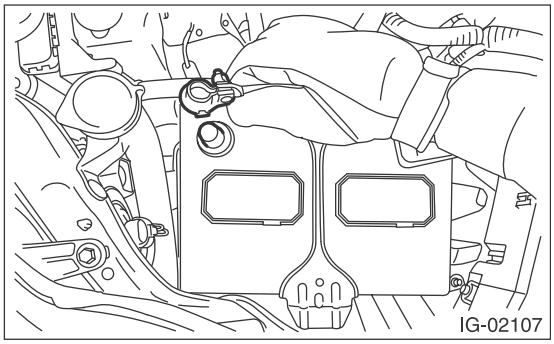

12) Install the air intake duct. <Ref. to IN(H4SO)-9, INSTALLATION, Air Intake Duct.>

C: INSPECTION

1) Check the connections and welds for exhaust leaks.
2) Make sure there are no holes or rusting.

3. Center Exhaust Pipe

A: REMOVAL

After removing the center exhaust pipe and front exhaust pipe as a unit, separate them. Refer to “Front Exhaust Pipe” for the removal procedure. <Ref. to EX(H4SO)-4, REMOVAL, Front Exhaust Pipe.>

B: INSTALLATION

Install the center exhaust pipe and front exhaust pipe as a unit. Refer to “Front Exhaust Pipe” for the installation procedure. <Ref. to EX(H4SO)-5, INSTALLATION, Front Exhaust Pipe.>

C: INSPECTION

1) Check the connections and welds for exhaust leaks.
2) Make sure there are no holes or rusting.

4. Rear Exhaust Pipe

A: REMOVAL

CAUTION:
Vehicle components are extremely hot after driving. Be wary of receiving burns from heated parts.

1) Lift up the vehicle.
2) Remove the rear exhaust pipe from center exhaust pipe.

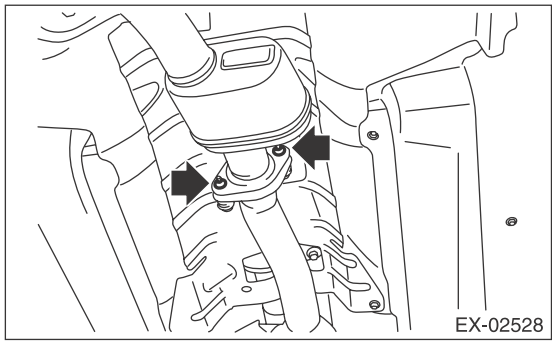

3) Remove the rear exhaust pipe from the muffler.

CAUTION:
Be careful not to drop the rear exhaust pipe.

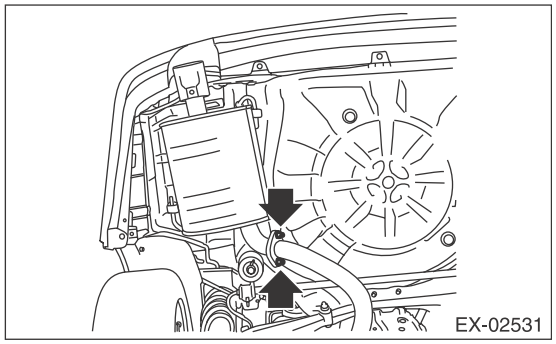

4) Apply a coat of spray type lubricant to the mating area of cushion rubber.
5) Remove the rear exhaust pipe from the cushion rubber.

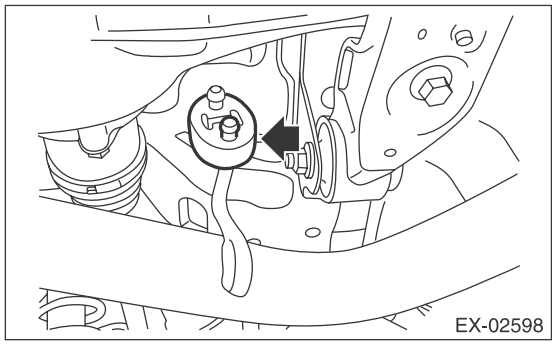

B: INSTALLATION

1) Apply a coat of spray type lubricant to the mating area of cushion rubber.
2) Install the rear exhaust pipe to the cushion rubber.

NOTE:
After assembling, degrease the lubricant which was applied to the cushion rubber while removing/installing.

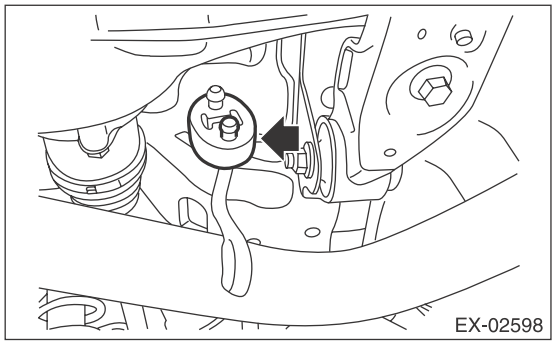

3) Install the rear exhaust pipe to the muffler.

NOTE:
Use a new gasket and self-locking nut.

Tightening torque:
48 N·m (4.9 kgf-m, 35.4 ft-lb)

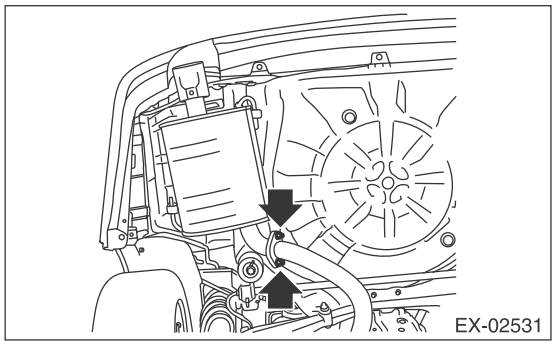

4) Install the rear exhaust pipe to center exhaust pipe.

NOTE:
Use a new gasket.

Tightening torque:
18 N·m (1.8 kgf-m, 13.3 ft-lb)

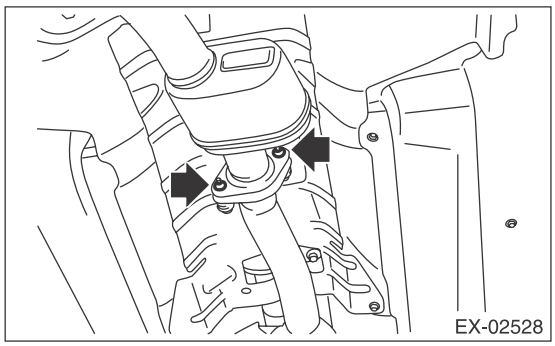

5) Lower the vehicle.

C: INSPECTION

1) Check the connections and welds for exhaust leaks.
2) Make sure there are no holes or rusting.
3) Check the cushion rubber for wear or crack.

5. Muffler

A: REMOVAL

CAUTION:
Vehicle components are extremely hot after driving. Be wary of receiving burns from heated parts.

1) Lift up the vehicle.
2) Remove the muffler from rear exhaust pipe.

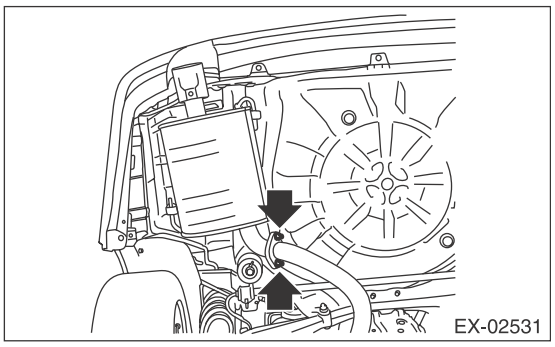

3) Apply a coat of spray type lubricant to the mating area of cushion rubber.
4) Remove the muffler from the cushion rubber.

CAUTION:
Be careful not to drop the muffler during removal.

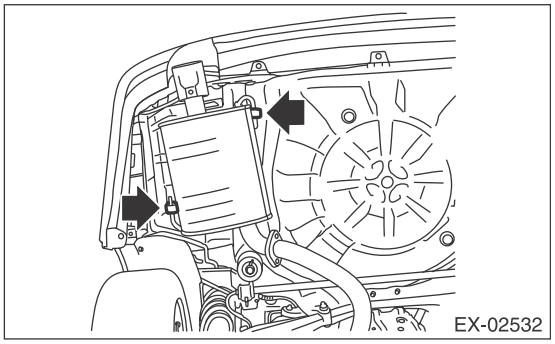

B: INSTALLATION

Install in the reverse order of removal.

NOTE:
- Use a new gasket and self-locking nut.
- After assembling, degrease the lubricant which was applied to the cushion rubber while removing/installing.

Tightening torque:
48 N·m (4.9 kgf-m, 35.4 ft-lb)

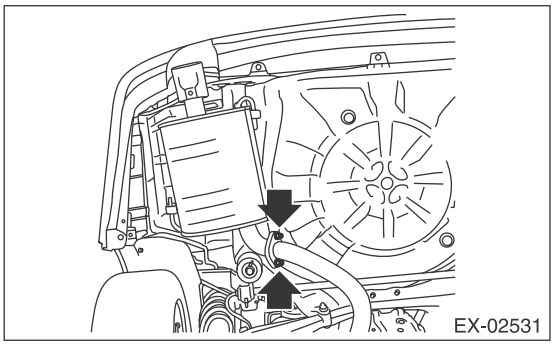

C: INSPECTION

1) Check the connections and welds for exhaust leaks.
2) Make sure there are no holes or rusting.
3) Check the cushion rubber for wear or crack.

COOLING

CO(H4SO)

Page

1. General Description 2
2. Radiator Fan System 7
3. Engine Coolant 14
4. Water Pump 16
5. Thermostat 18
6. Radiator 20
7. Radiator Cap 23
8. Radiator Main Fan and Fan Motor 24
9. Radiator Sub Fan and Fan Motor 25
10. Reservoir Tank 26
11. Engine Cooling System Trouble in General 27

1. General Description

A: SPECIFICATION

Cooling system				Electric fan + Forced engine coolant circulation system
Total engine coolant capacity	ℓ (US qt, Imp qt)			Approx. 6.5 (6.9, 5.7)
Water pump	Type			Centrifugal impeller type
	Discharge performance	Discharge rate ℓ (US gal, Imp gal) /min.		200 (52.8, 44.0)
		Pump speed — Discharge pressure		6,000 rpm — 225.4 kPa (23 mAq)
		Engine coolant temperature		80°C (176°F)
	Impeller diameter mm (in)			76 (2.99)
	Number of impeller vanes			8
	Pump pulley diameter mm (in)			60 (2.36)
	Clearance between impeller and case mm (in)		Standard	0.5 — 1.5 (0.020 — 0.060)
Thermostat	Type			Wax pellet type
	Starting temperature to open			86 — 90°C (187 — 194°F)
	Fully opens			95°C (203°F)
	Valve lift mm (in)			9.0 (0.354) or more
	Valve bore mm (in)			35 (1.38)
Radiator fan	Motor input	Main fan W		90
		Sub fan W		90
	Fan diameter / Blade	Main fan		300 mm (11.81 in)/4
		Sub fan		300 mm (11.81 in)/5
Radiator	Type			Down flow, pressure type
	Core dimensions	Width × Height × Thickness mm (in)		687.4 × 340 × 16 (27.06 × 13.39 × 0.63)
	Pressure range in which cap valve is open kPa (kg/cm^2, psi)	Positive pressure side	Standard	93 — 123 (0.95 — 1.25, 14 — 18)
			Service limit	83 (0.85, 12)
		Negative pressure side	Standard	–1.0 to –4.9 or less (–0.01 — –0.05, –0.1 — –0.7)
	Fins			Corrugated fin type
Reservoir tank	Capacity ℓ (US qt, Imp qt)			0.45 (0.48, 0.40)

	Recommended materials	Item number	Alternative
Coolant	SUBARU Super Coolant (Concentrated type)	—	—
	SUBARU Super Coolant (Diluted type)	K0670Y0001	
Water for dilution	Distilled water	—	Soft water or tap water
Cooling system protecting agent	Cooling system conditioner	SOA345001	—

B: COMPONENT

1. WATER PUMP

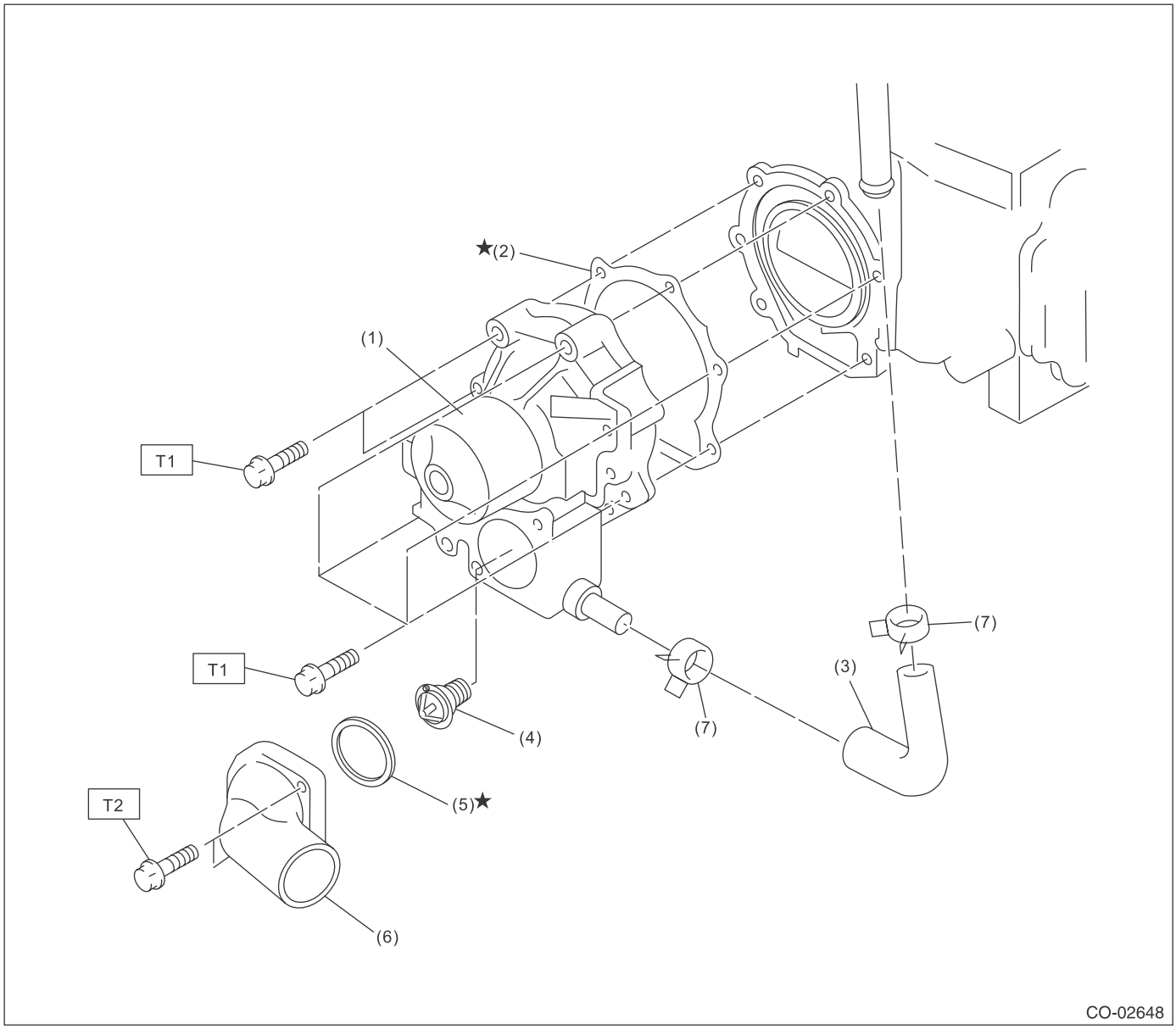

(1) Water pump ASSY
(2) Gasket
(3) Heater by-pass hose
(4) Thermostat
(5) Gasket
(6) Thermostat cover
(7) Clip

Tightening torque:N·m (kgf-m, ft-lb)
T1: First 12 (1.2, 8.9)
Second 12 (1.2, 8.9)
T2: 12 (1.2, 8.9)

2. RADIATOR & RADIATOR FAN

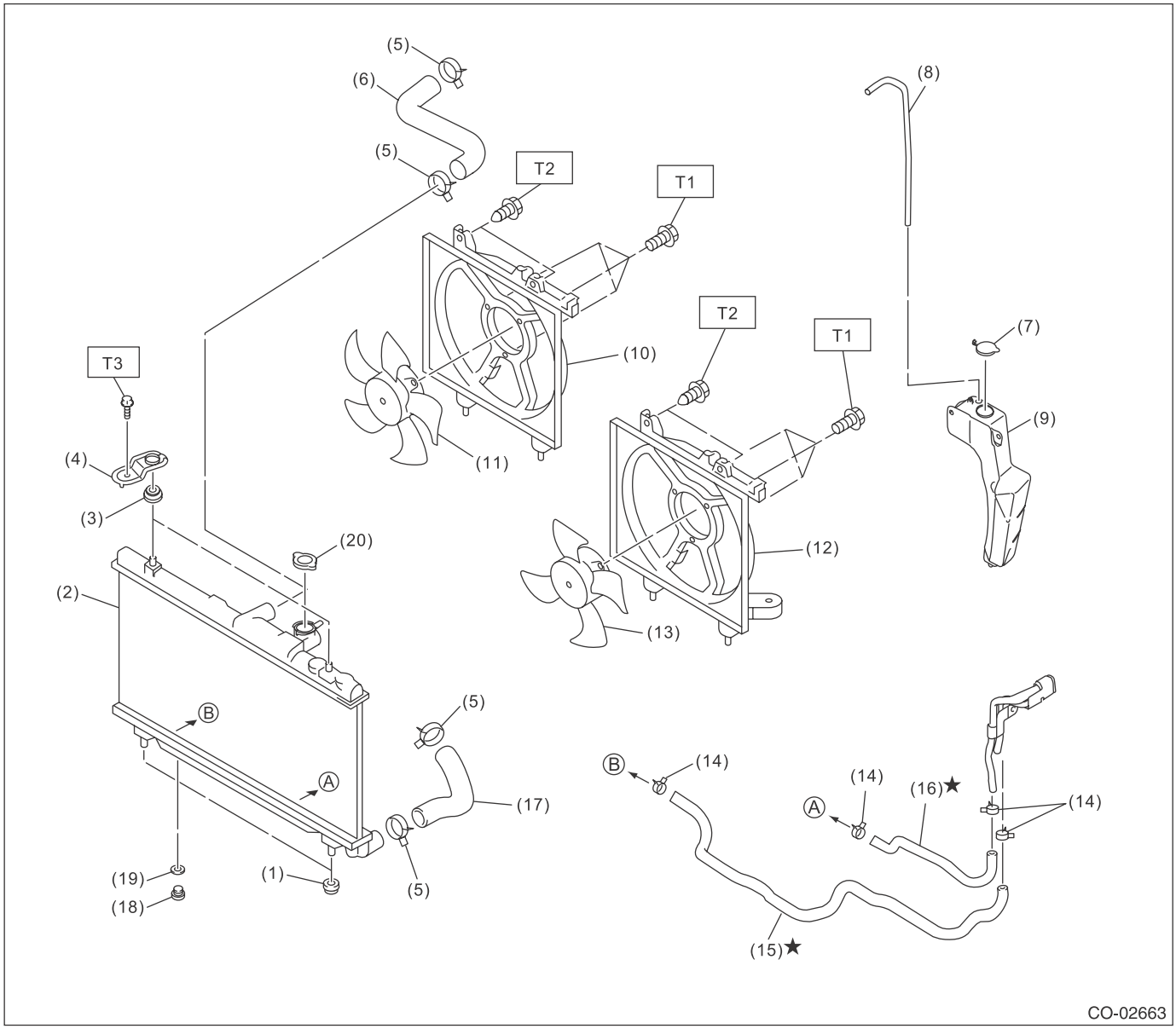

(1)	Radiator lower cushion	(10)	Radiator sub fan shroud	(19)	O-ring
(2)	Radiator	(11)	Radiator sub fan, radiator sub fan motor ASSY	(20)	Radiator cap
(3)	Radiator upper cushion	(12)	Radiator main fan shroud		
(4)	Radiator upper bracket	(13)	Radiator main fan, radiator main fan motor ASSY		
(5)	Clip	(14)	CVTF hose clamp (CVT model)		
(6)	Radiator inlet hose	(15)	CVTF hose A (CVT model)		
(7)	Engine coolant reservoir tank cap	(16)	CVTF hose B (CVT model)		
(8)	Over flow hose	(17)	Radiator outlet hose		
(9)	Engine coolant reservoir tank	(18)	Radiator drain plug		

Tightening torque:N·m (kgf-m, ft-lb)	
T1:	***5 (0.5, 3.7)***
T2:	***7.5 (0.8, 5.5)***
T3:	***12 (1.2, 8.9)***

C: CAUTION

- Wear appropriate work clothing, including a cap, protective goggles and protective shoes when performing any work.
- Remove contamination including dirt and corrosion before removal, installation or disassembly.
- Keep the disassembled parts in order and protect them from dust and dirt.
- Before removal, installation or disassembly, be sure to clarify the failure. Avoid unnecessary removal, installation, disassembly and replacement.
- Vehicle components are extremely hot after driving. Be wary of receiving burns from heated parts.
- Be sure to tighten fasteners including bolts and nuts to the specified torque.
- Place shop jacks or rigid racks at the specified points.
- Before disconnecting connectors of sensors or units, be sure to disconnect the ground cable from battery.
- Prepare a container and cloth to prevent scattering of engine coolant when performing work where engine coolant can be spilled. If the fuel spills, wipe it off immediately to prevent from penetrating into floor or flowing out for environmental protection.
- Follow all government and local regulations concerning disposal of refuse when disposing engine coolant.

D: PREPARATION TOOL

1. SPECIAL TOOL

ILLUSTRATION	TOOL NUMBER	DESCRIPTION	REMARKS
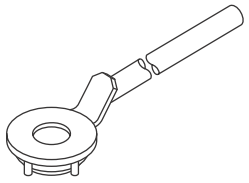 ST-499977400	499977400	CRANK PULLEY WRENCH	Used for removing and installing the crank pulley. (CVT model)
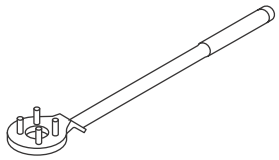 ST-499977100	499977100	CRANK PULLEY WRENCH	Used for removing and installing the crank pulley. (MT model)
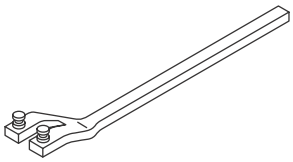 ST18231AA010	18231AA010	CAM SPROCKET WRENCH	Used for removing and installing cam sprocket. NOTE: CAM SPROCKET WRENCH (499207100) can also be used.
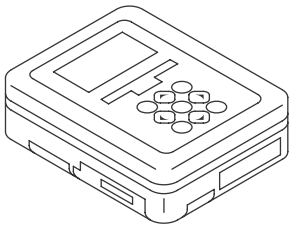 ST1B022XU0	1B022XU0	SUBARU SELECT MONITOR III KIT	Used for troubleshooting the electrical system.

2. GENERAL TOOL

TOOL NAME	REMARKS
Circuit tester	Used for measuring resistance and voltage.
Radiator cap tester	Used for checking radiator and radiator cap.

2. Radiator Fan System

A: WIRING DIAGRAM

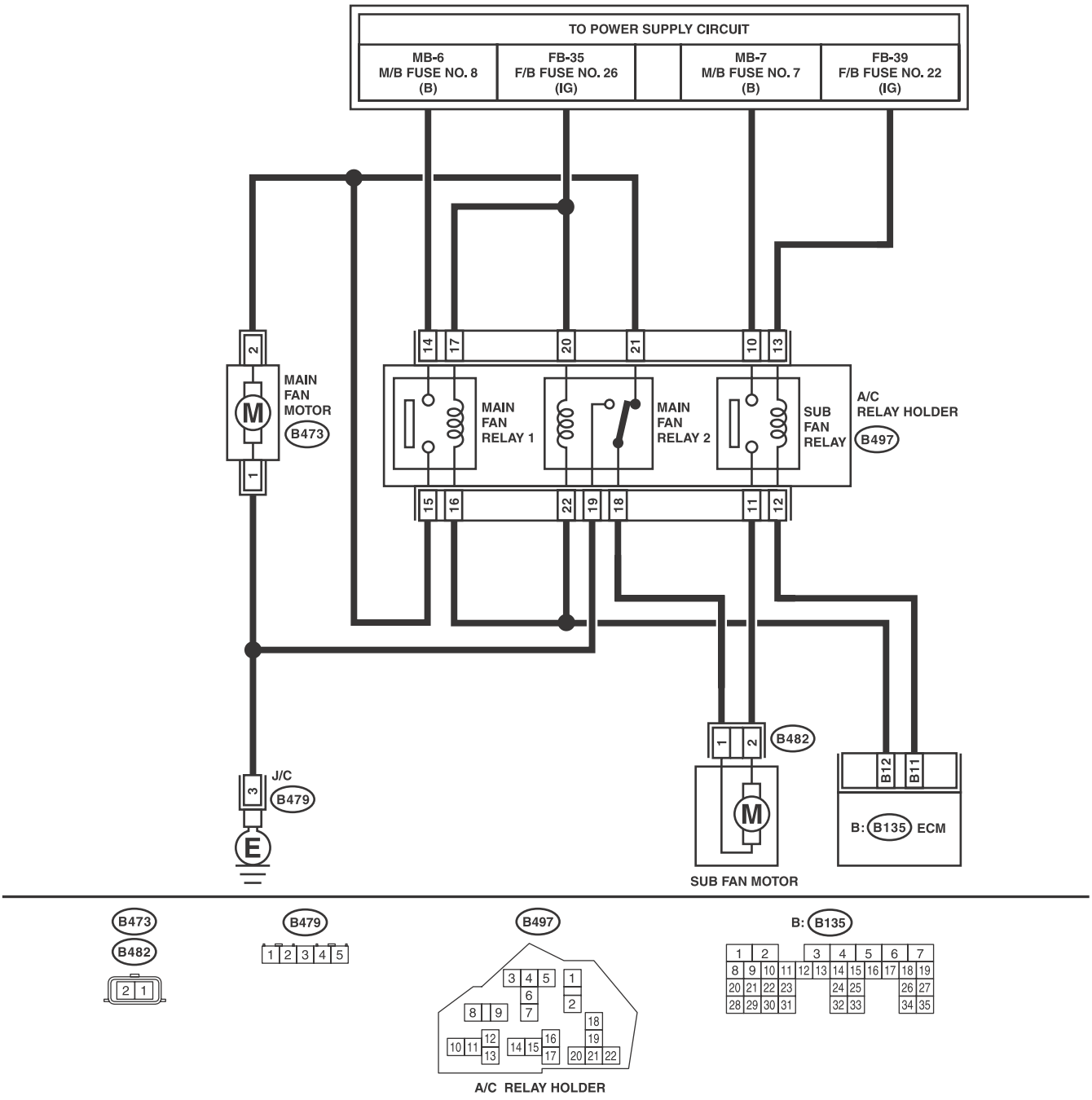

CO-02650

B: INSPECTION

Operating condition:

Radiator fan operates depending on the radiator fan operation mode related to engine coolant temperature or the radiator fan operation mode related to A/C compressor load, whichever is higher as an operation mode.

- Radiator fan operation mode related to engine coolant temperature

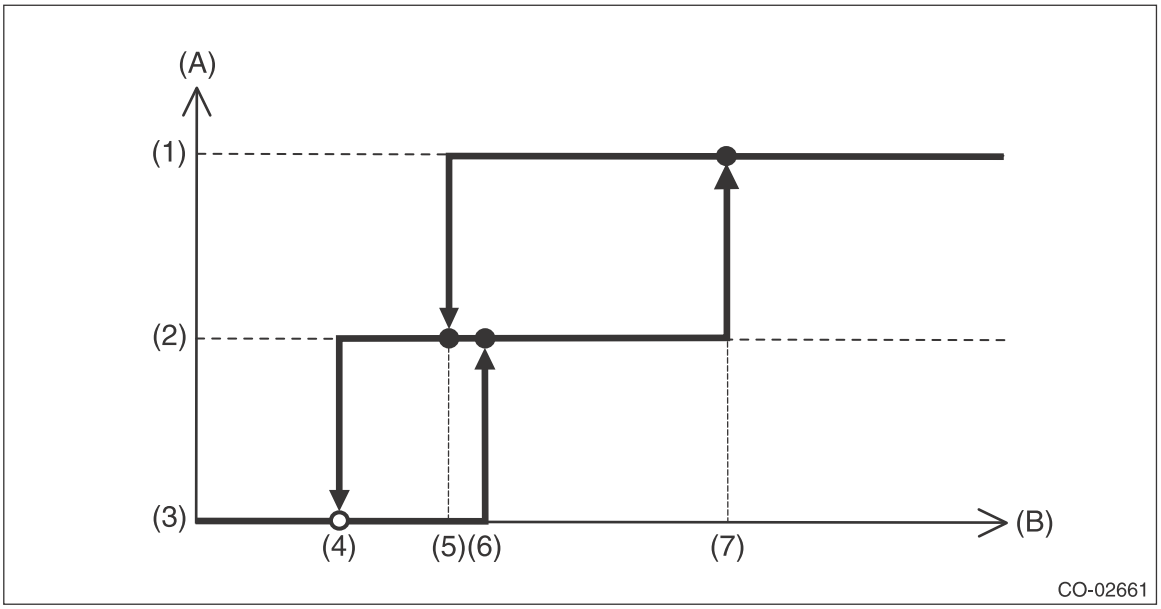

(A)	Radiator fan operation mode	(B)	Engine coolant temperature		
(1)	High-Speed	(4)	96°C (205°F)	(7)	100°C (212°F)
(2)	Low-Speed	(5)	97.5°C (207°F)		
(3)	OFF	(6)	98°C (208°F)		

- Radiator fan operation mode related to A/C compressor load

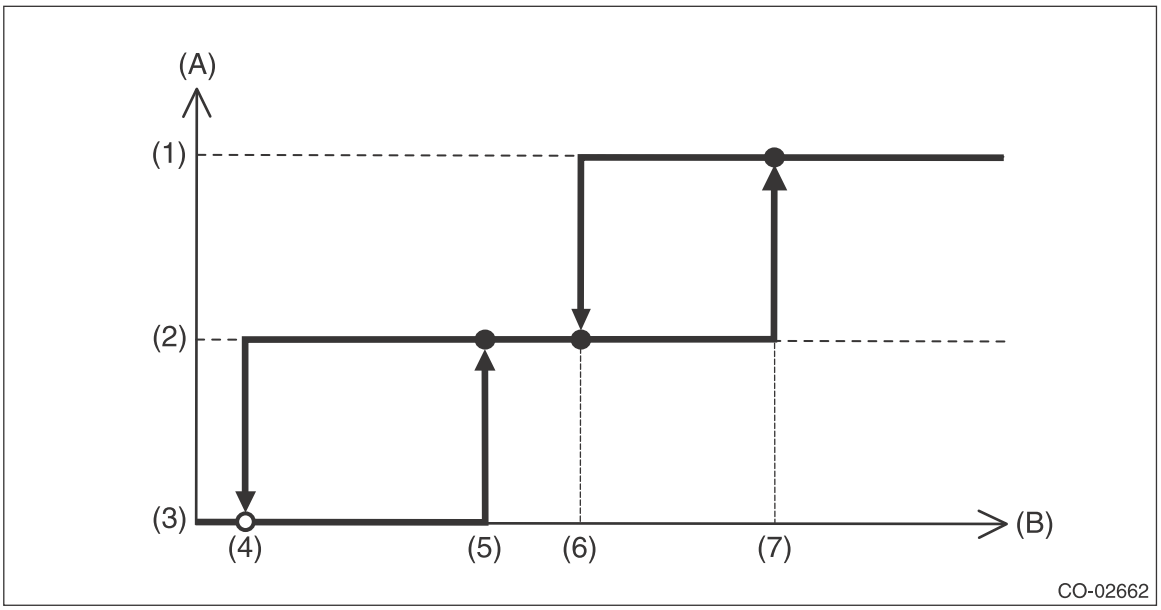

(A) Radiator fan operation mode
(B) A/C compressor refrigerant pressure

(1) High-Speed
(2) Low-Speed
(3) OFF
(4) 0.8 MPa (8.16 kgf/cm^2, 116 psi)
(5) 1.125 MPa (11.47 kgf/cm^2, 163 psi)
(6) 1.25 MPa (12.75 kgf/cm^2, 181 psi)
(7) 1.5 MPa (15.30 kgf/cm^2, 218 psi)

DIAGNOSIS:
Radiator main fan and radiator sub fans do not rotate under the above operating conditions.

	Step	Check	Yes	No
1	**CHECK OPERATION OF RADIATOR FAN.** 1) Connect the delivery mode fuse. 2) Turn the ignition switch to ON. 3) Using the Subaru Select Monitor, check the forced operation of the radiator fan relay. NOTE: • When performing a forced operation radiator fan relay check using the Subaru Select Monitor, the radiator main fan and radiator sub fan will repeat low speed revolution → high speed revolution → OFF in this order. • Subaru Select Monitor For detailed operation procedures, refer to “PC application help for Subaru Select Monitor”.	Do the radiator main fans and radiator sub fans rotate at low speed?	Go to step **2**.	Go to step **3**.
2	**CHECK OPERATION OF RADIATOR FAN.** 1) Connect the delivery mode fuse. 2) Turn the ignition switch to ON. 3) Using the Subaru Select Monitor, check the forced operation of the radiator fan relay. NOTE: • When performing a forced operation radiator fan relay check using the Subaru Select Monitor, the radiator main fan and radiator sub fan will repeat low speed revolution → high speed revolution → OFF in this order. • Subaru Select Monitor For detailed operation procedures, refer to “PC application help for Subaru Select Monitor”.	Do the radiator main fans and radiator sub fans rotate at high speed?	Radiator main fan system is normal.	Go to step **27**.

Step		Check	Yes	No
3	**CHECK POWER SUPPLY TO SUB FAN RELAY.** 1) Turn the ignition switch to OFF. 2) Remove the sub fan relay from A/C relay holder. 3) Measure the voltage between sub fan relay connector and chassis ground. ***Connector & terminal*** ***(B497) No. 10 (+) — Chassis ground (–):***	Is the voltage 10 V or more?	Go to step **4**.	Go to step **5**.
4	**CHECK POWER SUPPLY TO SUB FAN RELAY.** 1) Turn the ignition switch to ON. 2) Measure the voltage between sub fan relay connector and chassis ground. ***Connector & terminal*** ***(B497) No. 13 (+) — Chassis ground (–):***	Is the voltage 10 V or more?	Go to step **7**.	Go to step **6**.
5	**CHECK FUSE.** 1) Turn the ignition switch to OFF. 2) Remove the fuse No. 7. 3) Check the condition of fuse.	Is the fuse blown out?	Replace the fuse.	Repair the power supply line.
6	**CHECK FUSE.** 1) Turn the ignition switch to OFF. 2) Remove the fuse No. 22. 3) Check the condition of fuse.	Is the fuse blown out?	Replace the fuse.	Repair the power supply line.
7	**CHECK SUB FAN RELAY.** 1) Turn the ignition switch to OFF. 2) Measure the resistance between sub fan relay terminals. ***Terminals*** ***No. 10 — No. 11:***	Is the resistance 1 MΩ or more?	Go to step **8**.	Replace the sub fan relay. <Ref. to AC-23, Relay and Fuse.>
8	**CHECK SUB FAN RELAY.** 1) Connect the battery to terminals No. 13 and No. 12 of the sub fan relay. 2) Measure the resistance between sub fan relay terminals. ***Terminals*** ***No. 10 — No. 11:***	Is the resistance less than 1 Ω?	Go to step **9**.	Replace the sub fan relay. <Ref. to AC-23, Relay and Fuse.>
9	**CHECK HARNESS BETWEEN SUB FAN RELAY CONNECTOR AND SUB FAN MOTOR CONNECTOR.** 1) Disconnect the connector from the sub fan motor. 2) Measure the resistance of harness between sub fan relay connector and sub fan motor connector. ***Connector & terminal*** ***(B482) No. 2 — (B497) No. 11:***	Is the resistance less than 1 Ω?	Go to step **10**.	Repair the open circuit of harness between sub fan relay connector and sub fan motor connector.
10	**CHECK HARNESS BETWEEN SUB FAN MOTOR CONNECTOR AND MAIN FAN RELAY 2 CONNECTOR.** 1) Remove the main fan relay 2 from A/C relay holder. 2) Measure the resistance of harness between sub fan motor connector and main fan relay 2 connector. ***Connector & terminal*** ***(B482) No. 1 — (B497) No. 18:***	Is the resistance less than 1 Ω?	Go to step **11**.	Repair the open circuit of the harness between sub fan motor connector and main fan relay 2 connector.

	Step	Check	Yes	No
11	**CHECK FOR POOR CONTACT.** Check poor contact of sub fan motor connector.	Is there poor contact of the sub fan motor connector?	Repair the poor contact of sub fan motor connector.	Go to step **12**.
12	**CHECK SUB FAN MOTOR.** Connect the battery positive (+) terminal to terminal No. 2 of the sub fan motor, and the ground (–) terminal to terminal No. 1.	Does the radiator sub fan rotate?	Go to step **13**.	Replace the sub fan motor. <Ref. to CO(H4SO)-25, Radiator Sub Fan and Fan Motor.>
13	**CHECK MAIN FAN RELAY 2.** Measure the resistance between main fan relay 2 terminals. ***Terminals*** ***No. 21 — No. 18:***	Is the resistance less than 1 Ω?	Go to step **14**.	Replace the main fan relay 2. <Ref. to AC-23, Relay and Fuse.>
14	**CHECK HARNESS BETWEEN MAIN FAN RELAY 2 CONNECTOR AND MAIN FAN MOTOR CONNECTOR.** 1) Disconnect the connector from the main fan motor. 2) Measure the resistance of the harness between main fan relay 2 connector and main fan motor connector. ***Connector & terminal*** ***(B473) No. 2 — (B497) No. 21:***	Is the resistance less than 1 Ω?	Go to step **15**.	Repair the open circuit of the harness between main fan relay 2 connector and main fan motor connector.
15	**CHECK MAIN FAN MOTOR AND GROUND CIRCUIT.** Measure the resistance between main fan motor connector and chassis ground. ***Connector & terminal*** ***(B473) No. 1 — Chassis ground:***	Is the resistance less than 5 Ω?	Go to step **16**.	Repair the open circuit of the harness between main fan motor connector and chassis ground or poor contact of the joint connector.
16	**CHECK FOR POOR CONTACT.** Check poor contact of main fan motor connector.	Is there poor contact of the main fan motor connector?	Repair the poor contact of main fan motor connector.	Go to step **17**.
17	**CHECK MAIN FAN MOTOR.** Connect the battery positive (+) terminal to terminal No. 2 of the main fan motor, and the ground (–) terminal to terminal No. 1.	Does the radiator main fan rotate?	Go to step **18**.	Replace the main fan motor. <Ref. to CO(H4SO)-24, Radiator Main Fan and Fan Motor.>
18	**CHECK HARNESS BETWEEN SUB FAN RELAY CONNECTOR AND ECM.** 1) Disconnect the connectors from ECM. 2) Measure the resistance between the sub fan relay connector and ECM connector. ***Connector & terminal*** ***(B135) No. 11 — (B497) No. 12:***	Is the resistance less than 1 Ω?	Go to step **19**.	Repair the open circuit of harness between sub fan relay connector and ECM.
19	**CHECK FOR POOR CONTACT.** Check for poor contact of ECM connector.	Is there poor contact of ECM connector?	Repair the poor contact of ECM connector.	Check the DTC. Repair the trouble cause. <Ref. to EN(H4SO)(diag)-41, Read Diagnostic Trouble Code (DTC).>

Step		Check	Yes	No
20	**CHECK MAIN FAN RELAY 1.** 1) Turn the ignition switch to OFF. 2) Remove the main fan relay 1 from A/C relay holder. 3) Measure the resistance between main fan relay 1 terminals. ***Terminals*** ***No. 14 — No. 15:***	Is the resistance 1 MΩ or more?	Go to step **21**.	Replace the main fan relay 1. <Ref. to AC-23, Relay and Fuse.>
21	**CHECK MAIN FAN RELAY 1.** 1) Connect terminals No. 17 and No. 16 of the main fan relay 1 to the battery. 2) Measure the resistance between terminals of main fan relay 1 switch. ***Terminals*** ***No. 14 — No. 15:***	Is the resistance less than 1 Ω?	Go to step **22**.	Replace the main fan relay 1. <Ref. to AC-23, Relay and Fuse.>
22	**CHECK HARNESS BETWEEN MAIN FAN RELAY 1 CONNECTOR AND MAIN FAN MOTOR CONNECTOR.** 1) Disconnect the connector from the main fan motor. 2) Measure the resistance of the harness between main fan relay 1 connector and main fan motor connector. ***Connector & terminal*** ***(B473) No. 2 — (B497) No. 15:***	Is the resistance less than 1 Ω?	Go to step **23**.	Repair the open circuit of the harness between main fan relay 1 connector and main fan motor connector.
23	**CHECK HARNESS BETWEEN MAIN FAN RELAY 1 CONNECTOR AND ECM.** 1) Disconnect the connectors from ECM. 2) Measure the resistance between main fan relay 1 connector and ECM connector. ***Connector & terminal*** ***(B135) No. 12 — (B497) No. 16:***	Is the resistance less than 1 Ω?	Go to step **24**.	Repair the open circuit of the harness between main fan relay 1 connector and ECM.
24	**CHECK HARNESS BETWEEN MAIN FAN RELAY 2 CONNECTOR AND ECM.** Measure the resistance between main fan relay 2 connector and ECM connector. ***Connector & terminal*** ***(B135) No. 12 — (B497) No. 22:***	Is the resistance less than 1 Ω?	Go to step **25**.	Repair the open circuit of the harness between main fan relay 2 connector and ECM.
25	**CHECK FUSE.** 1) Turn the ignition switch to OFF. 2) Remove the fuse No. 8 and 26. 3) Check the condition of fuse.	Is the fuse blown out?	Replace the fuse.	Go to step **26**.
26	**CHECK FOR POOR CONTACT.** Check for poor contact of ECM connector.	Is there poor contact of ECM connector?	Repair the poor contact of ECM connector.	Repair the power supply circuit to the main fuse box.
27	**CHECK OPERATION OF RADIATOR FAN.** If the both fans do not rotate at high speed in the condition of step 2, check whether the radiator sub fan is rotating.	Does the radiator sub fan rotate?	Go to step **20**.	Go to step **28**.
28	**CHECK GROUND CIRCUIT OF MAIN FAN RELAY 2 CONNECTOR.** 1) Remove the main fan relay 2 from A/C relay holder. 2) Measure the resistance between main fan relay 2 connector and chassis ground. ***Connector & terminal*** ***(B497) No. 19 — Chassis ground:***	Is the resistance less than 1 Ω?	Go to step **29**.	Repair the open circuit of the harness between main fan relay 2 and chassis ground or poor contact of the joint connector.

Step		Check	Yes	No
29	**CHECK POWER SUPPLY TO MAIN FAN RELAY 2.** 1) Turn the ignition switch to ON. 2) Measure the voltage between main fan relay 2 connector and chassis ground. ***Connector & terminal*** ***(B497) No. 20 (+) — Chassis ground (–):***	Is the voltage 10 V or more?	Go to step **30**.	Repair the power supply line.
30	**CHECK MAIN FAN RELAY 2.** 1) Turn the ignition switch to OFF. 2) Remove the main fan relay 2. 3) Measure the resistance between main fan relay 2 terminals. ***Terminals*** ***No. 18 — No. 19:***	Is the resistance 1 MΩ or more?	Go to step **31**.	Replace the main fan relay 2. <Ref. to AC-23, Relay and Fuse.>
31	**CHECK MAIN FAN RELAY 2.** 1) Connect the battery to terminals No. 20 and No. 22 of the main fan relay 2. 2) Measure the resistance between main fan relay 2 terminals. ***Terminals*** ***No. 18 — No. 19:***	Is the resistance less than 1 Ω?	Go to step **23**.	Replace the main fan relay 2. <Ref. to AC-23, Relay and Fuse.>

3. Engine Coolant

A: REPLACEMENT

1. DRAINING OF ENGINE COOLANT

1) Lift up the vehicle.
2) Remove the under cover. <Ref. to EI-35, REMOVAL, Front Under Cover.>
3) Remove the drain plug to drain engine coolant into container.

NOTE:
Remove the radiator cap so that engine coolant will drain faster.

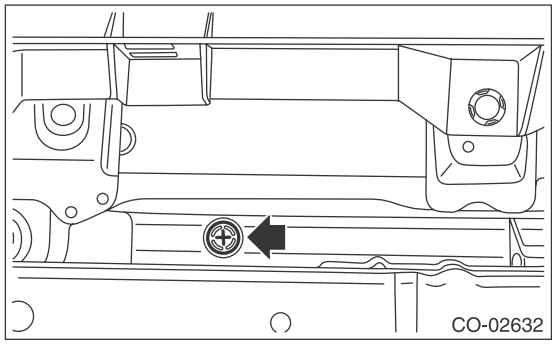

4) Install the drain plug.
5) Install the under cover. <Ref. to EI-35, INSTALLATION, Front Under Cover.>

2. FILLING OF ENGINE COOLANT

1) Pour cooling system conditioner from the filler neck.

Cooling system protecting agent:
Refer to "SPECIFICATION" for cooling system protecting agent. <Ref. to CO(H4SO)-2, SPECIFICATION, General Description.>

2) Pour engine coolant into the radiator up to the filler neck position.

Recommended engine coolant:
Refer to "SPECIFICATION" for recommended engine coolant. <Ref. to CO(H4SO)-2, SPECIFICATION, General Description.>

Engine coolant level:
Refer to "SPECIFICATION" for engine coolant level. <Ref. to CO(H4SO)-2, SPECIFICATION, General Description.>

Engine coolant concentration:
Refer to "ADJUSTMENT" for the recommended engine coolant concentration. <Ref. to CO(H4SO)-15, ADJUSTMENT, Engine Coolant.>

NOTE:
The SUBARU Super Coolant is especially made for SUBARU engine, which has an aluminum cylinder block, and contains anti-freeze and anti-rust agents. Always use SUBARU Super Coolant, since other coolant may cause corrosion.

3) Fill engine coolant into the reservoir tank up to "FULL" level.

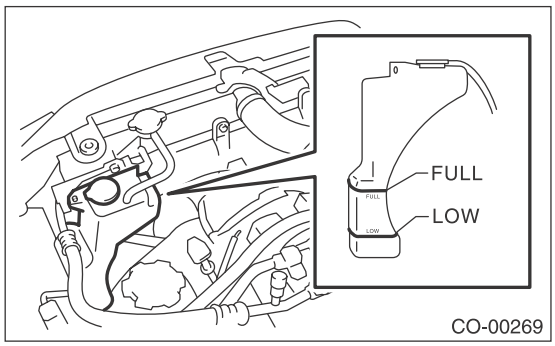

4) Close the radiator cap and start the engine. Race 5 to 6 times at 3,000 rpm or less, then stop the engine. (Complete this operation within 40 seconds.)
5) Wait for one minute after the engine stops, and open the radiator cap. If the engine coolant level drops, add engine coolant into radiator up to the filler neck position.
6) Perform the procedures 4) and 5) again.
7) Attach the radiator cap and reservoir tank cap properly.
8) Start the engine and operate the heater at maximum hot position and the blower speed setting to "LO".
9) Run the engine at 2,000 rpm or less until radiator fan starts and stops.

NOTE:
Be careful with the engine coolant temperature gauge to prevent overheating.
10) Stop the engine and wait until the engine coolant temperature lowers to 30°C (86°F) or less.
11) Open the radiator cap. If the engine coolant level drops, fill engine coolant up to the radiator filler neck position and to the reservoir tank "FULL" level.
12) Attach the radiator cap correctly.
13) Set the heater setting to maximum hot position and the blower speed setting to "LO" and start the engine. Perform racing at 3,000 rpm or less. If the flowing sound is heard from heater core, repeat the procedures from step 9).

B: ADJUSTMENT

1. PROCEDURE TO ADJUST THE SUBARU SUPER COOLANT CONCENTRATION

CAUTION:
SUBARU Super Coolant concentration must be used from 50 to 60% to assure the best performance of the anti-freeze and anti-rust agents.
To adjust the concentration of SUBARU Super Coolant according to temperature, find the proper SUBARU Super Coolant concentration in the table, and add diluting water to the SUBARU Super Coolant (concentrated type) until it reaches the proper dilution.

Relationship of SUBARU Super Coolant concentration and freezing temperature			
SUBARU Super Coolant concentration	50%	55%	60%
Freezing temperature	–36°C (–33°F)	–41°C (–42°F)	–50°C (–58°F)

Recommended Engine Coolant and Water for Dilution:
Refer to "SPECIFICATION" for the recommended engine coolant and diluting water. <Ref. to CO(H4SO)-2, SPECIFICATION, General Description.>

4. Water Pump

A: REMOVAL

1) Remove the radiator. <Ref. to CO(H4SO)-20, REMOVAL, Radiator.>
2) Remove the V-belts. <Ref. to ME(H4SO)-42, REMOVAL, V-belt.>
3) Remove the crank pulley. <Ref. to ME(H4SO)-44, REMOVAL, Crank Pulley.>
4) Remove the timing belt cover. <Ref. to ME(H4SO)-46, REMOVAL, Timing Belt Cover.>
5) Remove the timing belt. <Ref. to ME(H4SO)-47, TIMING BELT, REMOVAL, Timing Belt.>
6) Remove the automatic belt tension adjuster.

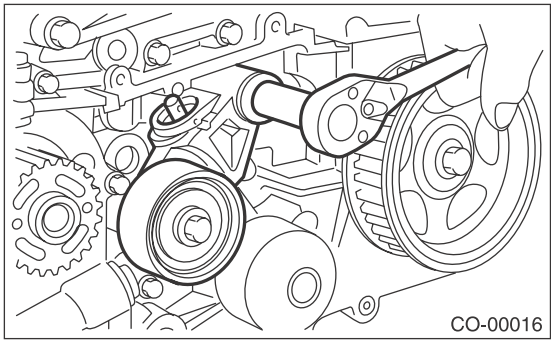
CO-00016

7) Remove the camshaft position sensor. <Ref. to FU(H4SO)-24, REMOVAL, Camshaft Position Sensor.>
8) Remove the cam sprocket LH. <Ref. to ME(H4SO)-52, REMOVAL, Cam Sprocket.>
9) Remove the belt cover No. 2 LH.

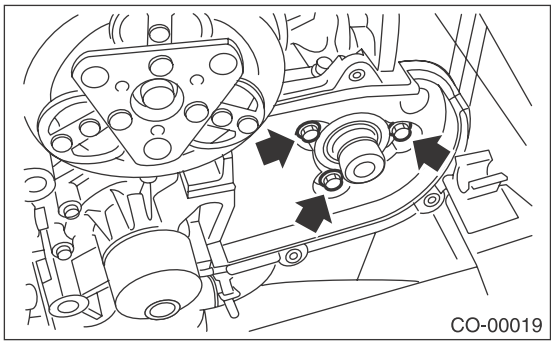
CO-00019

10) Remove the tensioner bracket.

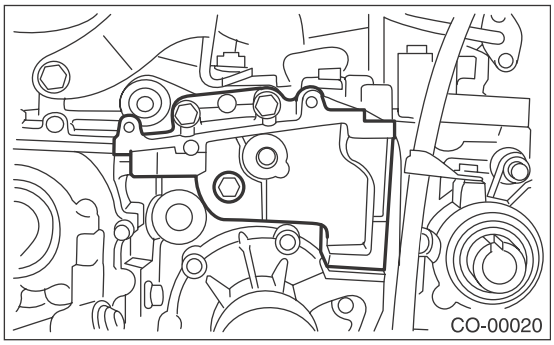
CO-00020

11) Disconnect the hose from water pump.
12) Remove the water pump.

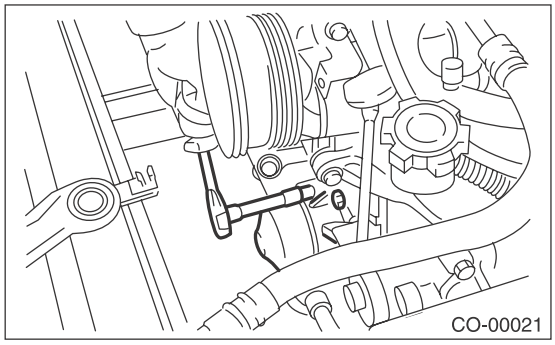
CO-00021

B: INSTALLATION

1) Install the water pump onto cylinder block LH.

NOTE:
- Use a new gasket.
- When installing the water pump, tighten bolts in two stages in alphabetical order as shown in the figure.

Tightening torque:
1st
12 N·m (1.2 kgf-m, 8.9 ft-lb)
Second
12 N·m (1.2 kgf-m, 8.9 ft-lb)

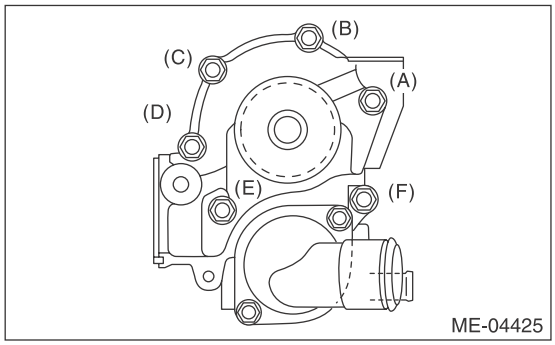

ME-04425

2) Install the hose to water pump.
3) Install the tensioner bracket.

Tightening torque:
24.5 N·m (2.5 kgf-m, 18.1 ft-lb)

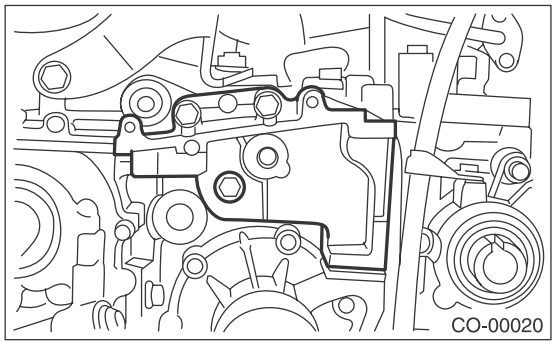
CO-00020

4) Install the belt cover No. 2 LH.

Tightening torque:
5 N·m (0.5 kgf-m, 3.7 ft-lb)

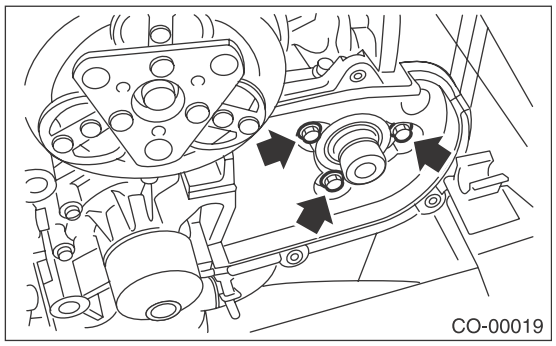

5) Install the cam sprocket LH. <Ref. to ME(H4SO)-52, INSTALLATION, Cam Sprocket.>
6) Install the camshaft position sensor. <Ref. to FU(H4SO)-24, INSTALLATION, Camshaft Position Sensor.>
7) Install an automatic belt tension adjuster with the tension rod held by a pin. <Ref. to ME(H4SO)-48, AUTOMATIC BELT TENSION ADJUSTER ASSEMBLY AND BELT IDLER, INSTALLATION, Timing Belt.>
8) Install the timing belt. <Ref. to ME(H4SO)-49, TIMING BELT, INSTALLATION, Timing Belt.>
9) Install the timing belt cover. <Ref. to ME(H4SO)-46, INSTALLATION, Timing Belt Cover.>
10) Install the crank pulley. <Ref. to ME(H4SO)-44, INSTALLATION, Crank Pulley.>
11) Install the V-belts. <Ref. to ME(H4SO)-42, INSTALLATION, V-belt.>
12) Install the radiator. <Ref. to CO(H4SO)-21, INSTALLATION, Radiator.>

C: INSPECTION

1) Check the water pump bearing for smooth rotation.
2) Check the water pump pulley for abnormalities.
3) Make sure the impeller is not abnormally deformed or damaged.
4) Inspect the clearance between impeller and pump case.

Clearance between impeller and pump case:
Standard
0.5 — 1.5 mm (0.020 — 0.060 in)

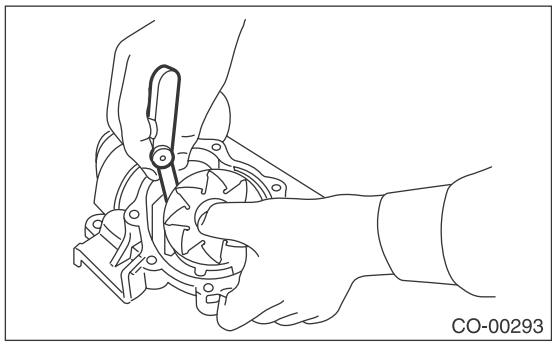

5) After water pump installation, check pulley shaft for engine coolant leaks or noise. If leaks or noise are noted, replace the water pump assembly.

5. Thermostat

A: REMOVAL

1) Lift up the vehicle.
2) Remove the under cover. <Ref. to EI-35, REMOVAL, Front Under Cover.>
3) Drain engine coolant. <Ref. to CO(H4SO)-14, DRAINING OF ENGINE COOLANT, REPLACEMENT, Engine Coolant.>
4) Disconnect the radiator outlet hose from thermostat cover.

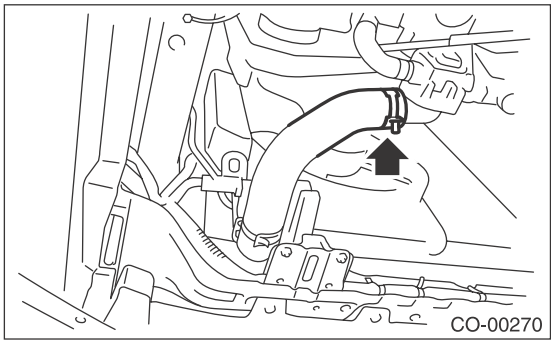

5) Remove the thermostat cover, and then remove the gasket and thermostat.

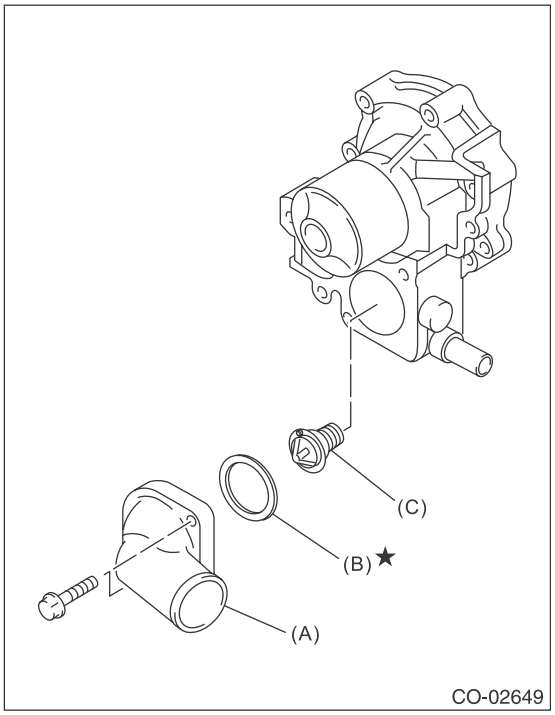

(A) Thermostat cover
(B) Gasket
(C) Thermostat

B: INSTALLATION

1) Install a gasket to thermostat.

NOTE:
Use a new gasket.
2) Install the thermostat and thermostat cover.

NOTE:
Install the parts with the jiggle pin facing upside.

Tightening torque:
12 N·m (1.2 kgf-m, 8.9 ft-lb)

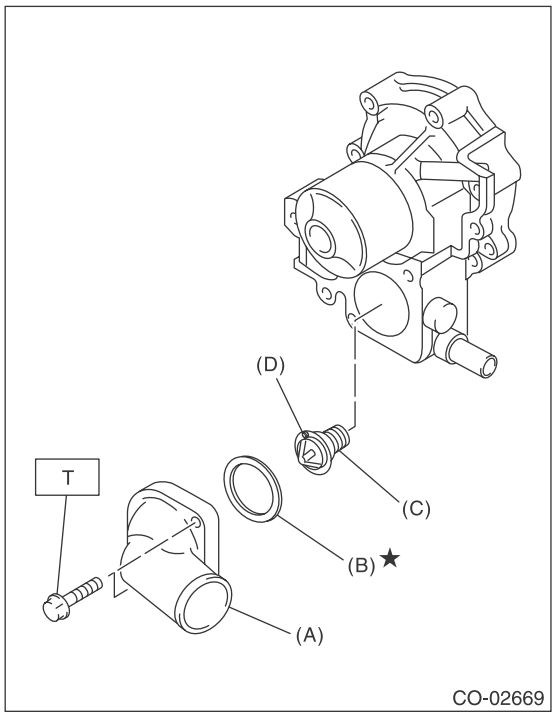

(A) Thermostat cover
(B) Gasket
(C) Thermostat
(D) Jiggle pin

3) Connect the radiator outlet hose to thermostat cover.
4) Install the under cover. <Ref. to EI-35, INSTALLATION, Front Under Cover.>
5) Lower the vehicle.
6) Fill engine coolant. <Ref. to CO(H4SO)-14, FILLING OF ENGINE COOLANT, REPLACEMENT, Engine Coolant.>

C: INSPECTION

1) Check that the thermostat does not have deformation, cracks or damage.
2) Check that the thermostat valve closes completely at an ambient temperature.
3) Immerse the thermostat and a thermometer in water. Raise water temperature gradually, and check the temperature and valve lift when the valve begins to open and when the valve is fully opened. Replace the thermostat if faulty.

NOTE:
- During the test, agitate the water for even temperature distribution.
- Leave the thermostat in the boiling water for five minutes or more before measuring the valve lift.
- Hold the thermostat with a wire or the like to avoid contacting the container bottom.

Starting temperature to open:
86 — 90°C (187 — 194°F)

Full open temperature:
95°C (203°F)

Total valve lift:
9.0 mm (0.354 in) or more

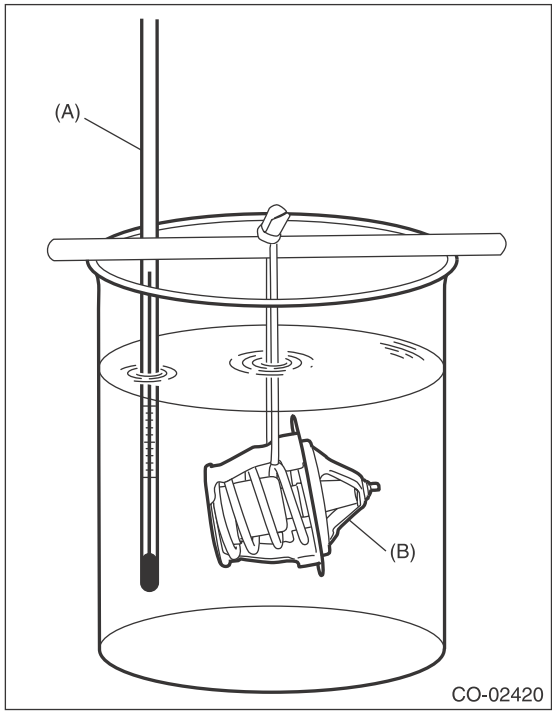

(A) Thermometer
(B) Thermostat

6. Radiator

A: REMOVAL

CAUTION:
The radiator is pressurized when the engine and radiator are hot. Wait until engine and radiator cools down before working on the radiator.

1) Disconnect the ground cable from battery.

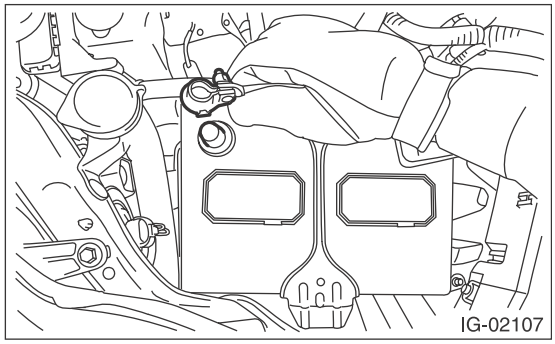

2) Lift up the vehicle.
3) Remove the under cover. <Ref. to EI-35, REMOVAL, Front Under Cover.>
4) Drain engine coolant. <Ref. to CO(H4SO)-14, DRAINING OF ENGINE COOLANT, REPLACEMENT, Engine Coolant.>
5) Disconnect the radiator outlet hose from thermostat cover.

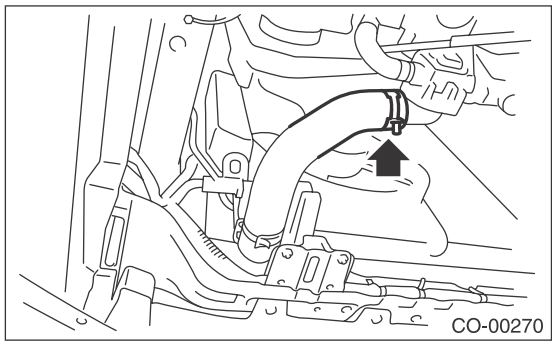

6) Disconnect the CVTF cooler hoses from CVTF pipes. (CVT model)

NOTE:
Plug the CVTF pipe to prevent CVTF from leaking.

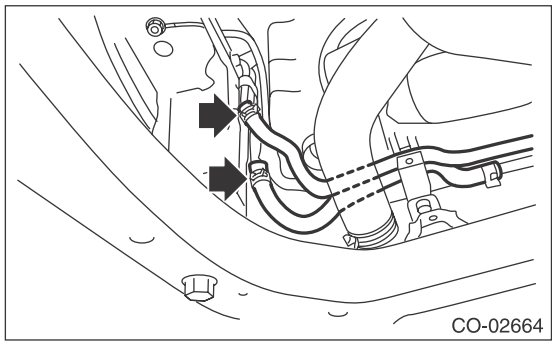

7) Lower the vehicle.
8) Remove the air intake duct. <Ref. to IN(H4SO)-9, REMOVAL, Air Intake Duct.>
9) Remove the reservoir tank. <Ref. to CO(H4SO)-26, REMOVAL, Reservoir Tank.>
10) Disconnect the connectors of main fan motor (A) and sub fan motor (B).

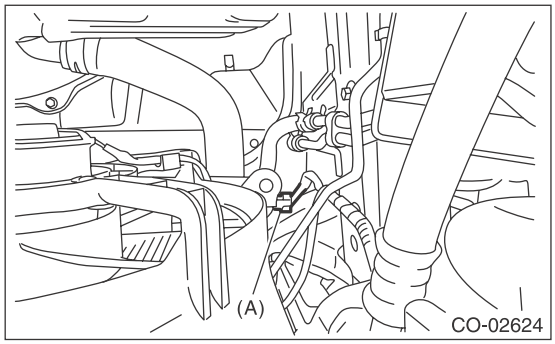

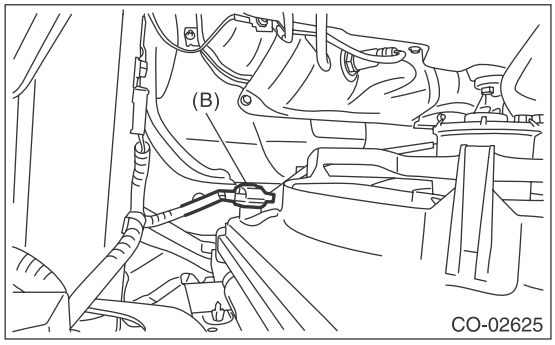

11) Disconnect the radiator inlet hoses from the engine.

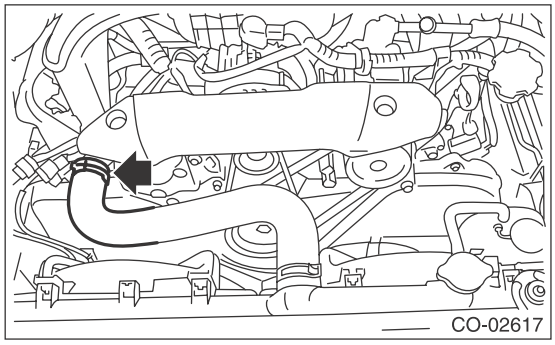

12) Remove the grille bracket.

NOTE:
Remove ten clips when removing the grille bracket.

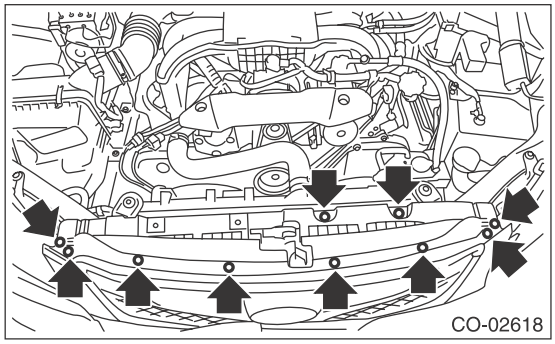

13) Remove the radiator upper brackets.

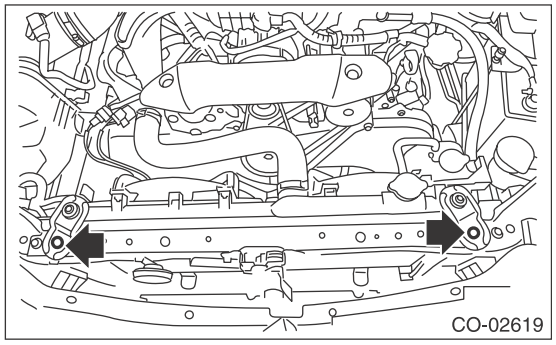

14) Lift the radiator up and away from vehicle.
15) Remove the radiator lower cushion from the vehicle body.

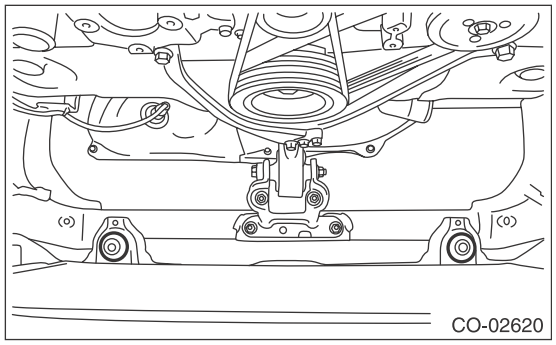

B: INSTALLATION

1) Install the radiator lower cushion to the vehicle body.

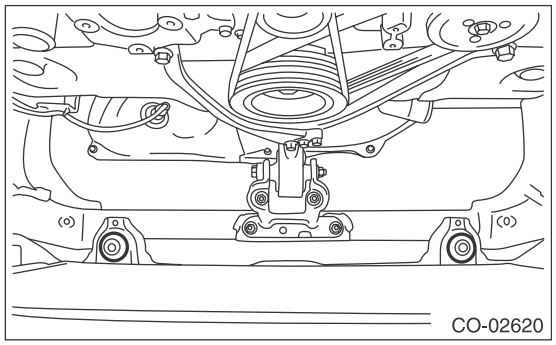

2) Install the radiator to the vehicle.

NOTE:
Insert the pin on the lower side of radiator into the radiator lower cushion.

3) Install the radiator upper brackets.

Tightening torque:
12 N·m (1.2 kgf-m, 8.9 ft-lb)

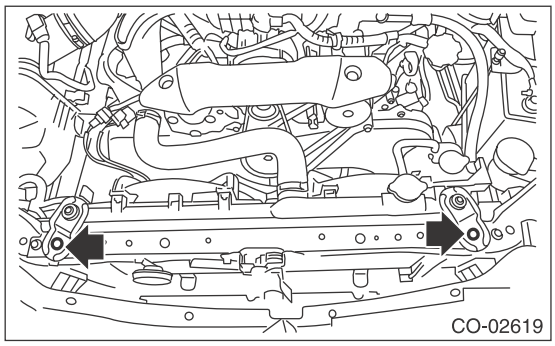

4) Attach the grille bracket.

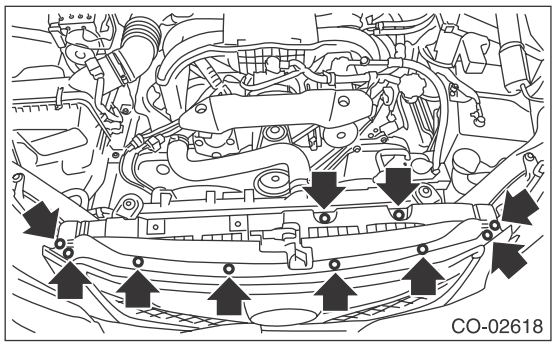

5) Connect the radiator inlet hose.

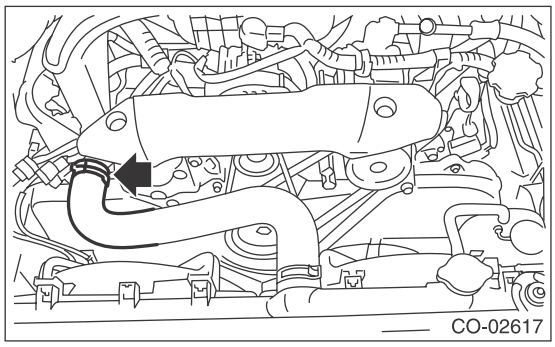

6) Connect the connectors of radiator main fan motor connector (A) and sub fan motor connector (B).

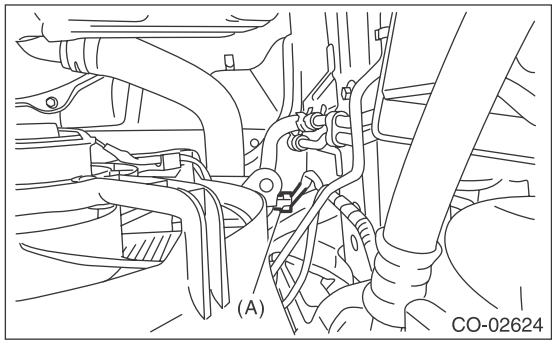

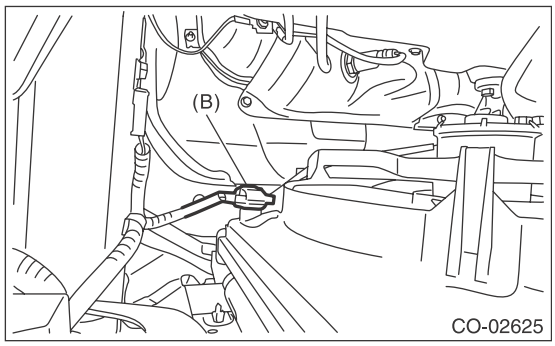

7) Install the air intake duct. <Ref. to IN(H4SO)-9, INSTALLATION, Air Intake Duct.>
8) Install the reservoir tank. <Ref. to CO(H4SO)-26, INSTALLATION, Reservoir Tank.>
9) Lift up the vehicle.
10) Connect the CVTF cooler hoses. (CVT model)

NOTE:
Use a new CVTF hose.

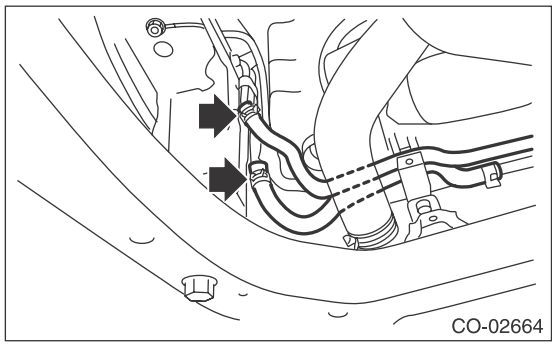

11) Connect the radiator outlet hose.

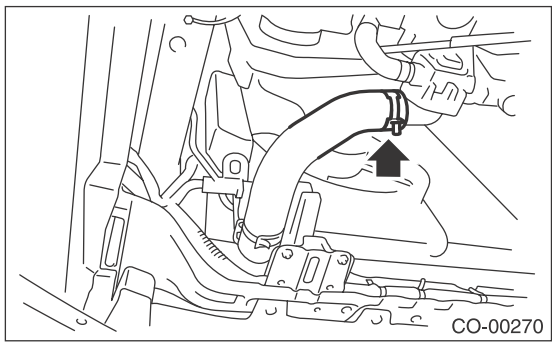

12) Install the under cover. <Ref. to EI-35, INSTALLATION, Front Under Cover.>
13) Lower the vehicle.
14) Connect the ground cable to battery.

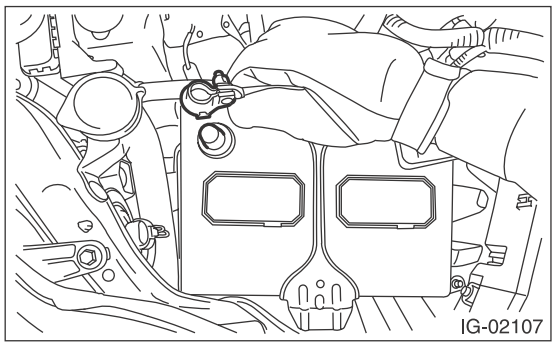

15) Fill engine coolant. <Ref. to CO(H4SO)-14, FILLING OF ENGINE COOLANT, REPLACEMENT, Engine Coolant.>
16) Adjust the CVTF level. (CVT model) <Ref. to CVT-35, ADJUSTMENT, CVTF.>

C: INSPECTION

1) Check that the radiator does not have deformation, cracks or damage.
2) Check that the hose has no cracks, damage or loose part.
3) Remove the radiator cap, fill the radiator with engine coolant, and then install the radiator cap tester to the filler neck of radiator.

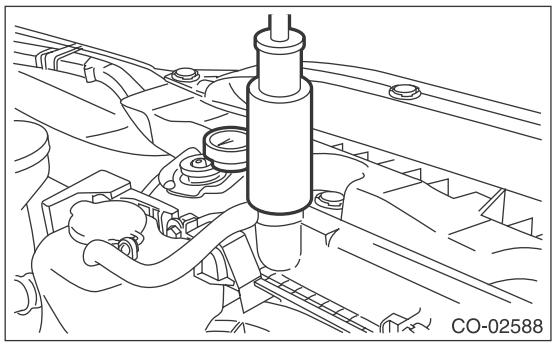

4) Apply a pressure of 157 kPa (1.6 kgf/cm^2, 23 psi) to the radiator, and check the following items.
- Leakage from the radiator or its vicinity
- Leakage from the hose or its connections

CAUTION:
- **Engine should be turned off.**
- **Wipe engine coolant from check points in advance.**
- **Be careful of engine coolant from spurting out when removing the radiator cap tester.**
- **Be careful not to deform the filler neck of radiator when installing and removing the radiator cap tester.**

7. Radiator Cap

A: INSPECTION

1) Check that the radiator cap does not have deformation, cracks or damage.
2) Attach the radiator cap tester to radiator cap.

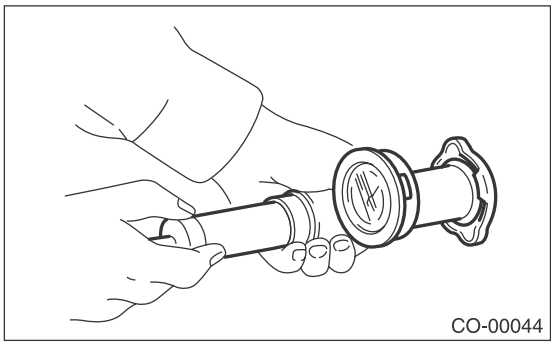

3) Increase pressure until the radiator cap tester gauge needle stops. Radiator cap is functioning properly if it holds the service limit pressure for 5 — 6 seconds. Replace the radiator cap if its valve opens at less than the service limit.

Standard:
93 — 123 kPa (0.95 — 1.25 kgf/cm^2, 14 — 18 psi)

Service limit:
83 kPa (0.85 kgf/cm^2, 12 psi)

CAUTION:
Be sure to remove foreign matter and rust from the cap in advance. Otherwise, results of pressure test will be incorrect.

8. Radiator Main Fan and Fan Motor

A: REMOVAL

1) Disconnect the ground cable from battery.

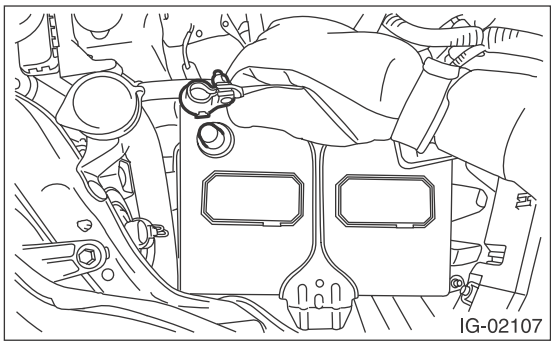

2) Remove the reservoir tank. <Ref. to CO(H4SO)-26, REMOVAL, Reservoir Tank.>
3) Disconnect the connector (A) of the main fan motor assembly.

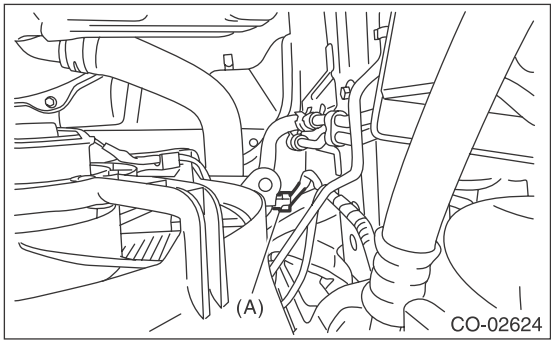

4) Remove the CVTF hose from the clip of the radiator main fan shroud. (CVT model)
5) Remove the bolts which hold the radiator main fan shroud to the radiator.

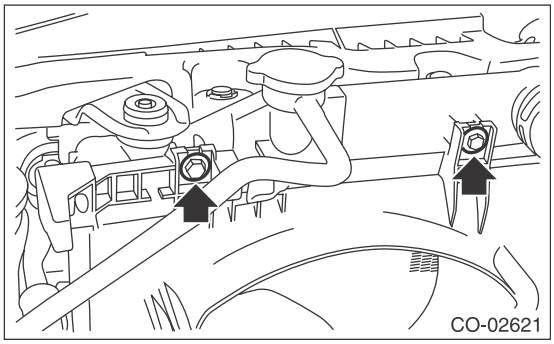

6) Remove the radiator main fan and fan motor from vehicle.

B: INSTALLATION

CAUTION:
Confirm that the radiator hose is securely connected.
Install in the reverse order of removal.

Tightening torque:
7.5 N·m (0.8 kgf-m, 5.5 ft-lb)

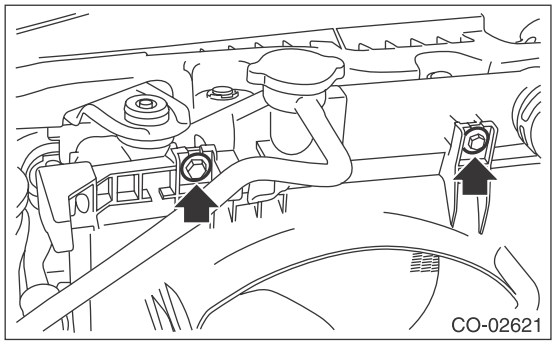

C: DISASSEMBLY

1) Remove the clip which holds the main fan motor assembly connector onto the radiator main fan shroud.
2) Remove the bolts which hold the main fan motor assembly onto the radiator main shroud.

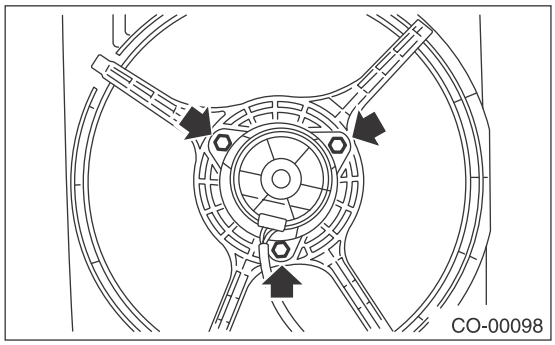

D: ASSEMBLY

Assemble in the reverse order of disassembly.

Tightening torque:
5 N·m (0.5 kgf-m, 3.7 ft-lb)

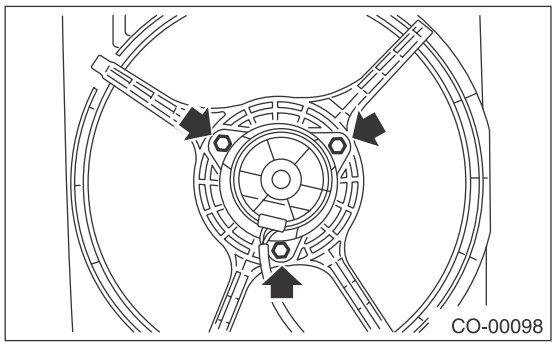

E: INSPECTION

Check that the radiator main fan, radiator main fan shroud and main fan motor assembly do not have deformation, cracks or damage.

9. Radiator Sub Fan and Fan Motor

A: REMOVAL

1) Disconnect the ground cable from battery.

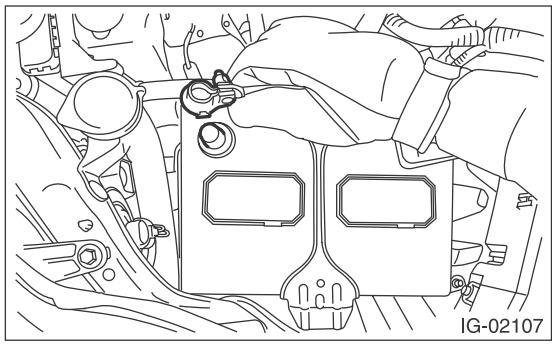

2) Remove the air intake duct. <Ref. to IN(H4SO)-9, REMOVAL, Air Intake Duct.>
3) Remove the connector (B) of sub fan motor assembly.

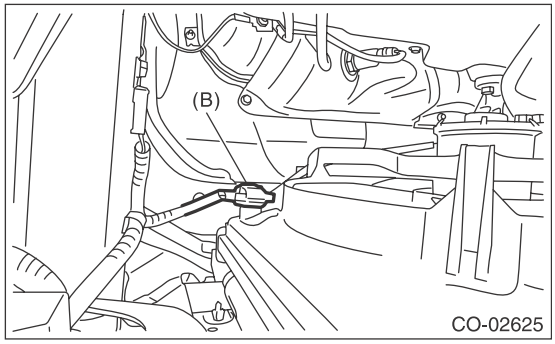

4) Remove the CVTF hose from the clip of the radiator sub fan & fan motor assembly. (CVT model)
5) Remove the bolts which hold the radiator sub fan shroud to the radiator.

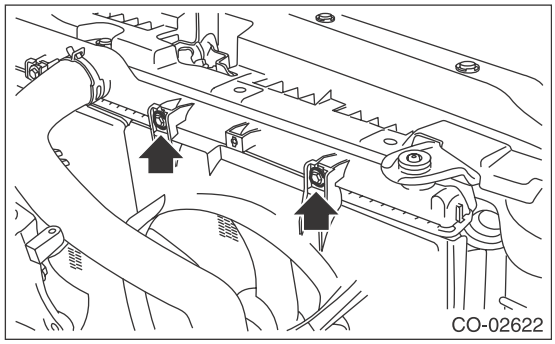

6) Remove the radiator sub fan and fan motor from vehicle.

B: INSTALLATION

CAUTION:
Confirm that the radiator hose is securely connected.
Install in the reverse order of removal.

Tightening torque:
7.5 N·m (0.8 kgf-m, 5.5 ft-lb)

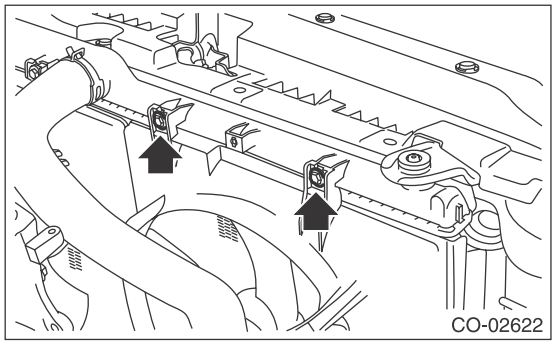

C: DISASSEMBLY

1) Remove the clip which holds the radiator sub fan motor assembly connector onto the radiator sub fan shroud.
2) Remove the bolts which hold the sub fan motor assembly onto the radiator sub fan shroud.

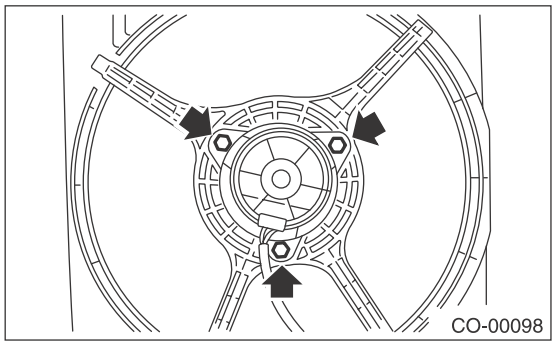

D: ASSEMBLY

Assemble in the reverse order of disassembly.

Tightening torque:
5 N·m (0.5 kgf-m, 3.7 ft-lb)

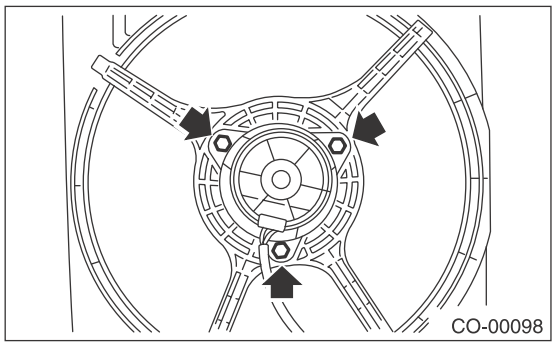

E: INSPECTION

Check that the radiator sub fan, radiator sub fan shroud and sub fan motor assembly do not have deformation, cracks or damage.

10.Reservoir Tank

A: REMOVAL

1) Pull out the over flow hose (A) from the reservoir tank.
2) Pull out the reservoir tank to the arrow direction while pushing the claw (B).

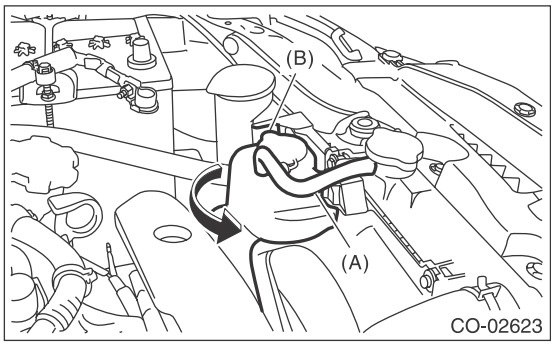

B: INSTALLATION

Install in the reverse order of removal.

C: INSPECTION

1) Check that the reservoir tank does not have deformation, cracks or damage.
2) Make sure the over flow hoses are not cracked, damaged or loose.
3) Make sure the engine coolant level is between “FULL” and “LOW”.

11.Engine Cooling System Trouble in General

A: INSPECTION

Trouble	Possible cause	Corrective action
Over-heating	a. Insufficient engine coolant	Replenish engine coolant, inspect for leakage, and repair it if necessary.
	b. Loose timing belt	Repair or replace timing belt tensioner.
	c. Oil on timing belt	Replace.
	d. Malfunction of thermostat	Replace.
	e. Malfunction of water pump	Replace.
	f. Clogged engine coolant passage	Clean.
	g. Improper ignition timing	Inspect and repair ignition control system. <Ref. to EN(H4SO)(diag)-2, Basic Diagnostic Procedure.>
	h. Clogged or leaking radiator	Clean, repair or replace.
	i. Defective radiator fan	Replace.
	j. Improper engine oil in engine coolant	Replace the engine coolant. If ineffective, check, repair or replace engine components.
	k. Air/fuel mixture ratio too lean	Inspect and repair the fuel injection system. <Ref. to EN(H4SO)(diag)-2, Basic Diagnostic Procedure.>
	l. Excessive back pressure in exhaust system	Clean or replace.
	m. Insufficient clearance between piston and cylinder	Adjust or replace.
	n. Slipping clutch	Repair or replace.
	o. Dragging brake	Adjust.
	p. Defective radiator fan	Inspect the radiator fan relay, engine coolant temperature sensor or fan motor and replace them.
Over-cooling	a. Ambient temperature extremely low	Partly cover radiator front area.
	b. Defective thermostat	Replace.
Engine coolant leaks	a. Loosened or damaged connecting units on hoses	Repair or replace.
	b. Leakage from water pump	Replace.
	c. Leakage from water pipe	Repair or replace.
	d. Leakage around cylinder head gasket	Retighten cylinder head bolts or replace cylinder head gasket.
	e. Damaged or cracked cylinder head and cylinder block	Repair or replace.
	f. Damaged or cracked thermostat cover	Repair or replace.
	g. Leakage from radiator	Repair or replace.
Noise	a. Timing belt problem	Replace.
	b. Defective radiator fan	Replace.
	c. Defective water pump bearing	Replace water pump.
	d. Defective water pump mechanical seal	Replace water pump.

LUBRICATION

LU(H4SO)

		Page
1.	General Description	2
2.	Oil Pressure System	10
3.	Engine Oil	12
4.	Oil Pump	14
5.	Oil Pan and Strainer	18
6.	Oil Pressure Switch	23
7.	Engine Oil Cooler	25
8.	Oil Catch Tank	27
9.	Scavenge Pump	28
10.	Oil Pipe	29
11.	Engine Oil Filter	34
12.	Oil Level Switch	35
13.	Engine Lubrication System Trouble in General	42

1. General Description

A: SPECIFICATION

- 2.5 L non-turbo model

Lubrication method					Forced lubrication
Oil pump	Pump type				Trochoid type
	Number of teeth	Inner rotor			9
		Outer rotor			10
	Outer rotor diameter × thickness			mm (in)	76 × 10 (2.99 × 0.39)
	Tip clearance between inner and outer rotors		mm (in)	Standard	0.04 — 0.14 (0.0016 — 0.0055)
	Case clearance between outer rotor and pump case		mm (in)	Standard	0.10 — 0.175 (0.0039 — 0.0069)
	Side clearance between inner rotor and pump case		mm (in)	Standard	0.02 — 0.07 (0.0008 — 0.0028)
	Relief valve spring	Free length		mm (in)	73.7 (2.902)
		Installed length		mm (in)	54.7 (2.154)
		Load when installed		N (kgf, lbf)	93.1 (9.49, 20.93)
	Performance (Oil temperature 80°C (176°F))	600 rpm	Discharge pressure	kPa (kgf/cm^2, psi)	98 (1.0, 14)
			Discharge rate	ℓ (US qt, Imp qt)/min.	4.6 (4.9, 4.0) or more
		5,000 rpm	Discharge pressure	kPa (kgf/cm^2, psi)	294 (3.0, 43)
			Discharge rate	ℓ (US qt, Imp qt)/min.	47.0 (49.7, 41.4) or more
	Relief valve working pressure			kPa (kgf/cm^2, psi)	588 (6.0, 85)
Oil filter	Filter type				Full-flow filter type
	Filtration area	cm^2 (sq in)	Outer diameter: 68 mm (2.68 in) (black)		800 (124)
			Outer diameter: 67.4 mm (2.65 in) (blue)		555 (86)
	By-pass valve opening pressure			kPa (kgf/cm^2, psi)	160 (1.63, 23.2)
	Outer diameter × width	mm (in)	Outer diameter: 68 mm (2.68 in) (black)		68 × 65 (2.68 × 2.56)
			Outer diameter: 67.4 mm (2.65 in) (blue)		67.4 × 65.3 (2.65 × 2.57)
	Installation screw specifications				M 20 × 1.5
Oil pressure switch	Type				Immersed contact point type
	Operating voltage — power consumption				12 V — 3.4 W or less
	Warning light operating pressure			kPa (kgf/cm^2, psi)	14.7 (0.15, 2.1)
	Proof pressure			kPa (kgf/cm^2, psi)	981 (10, 142) or more
Engine oil	Total capacity (at overhaul)			ℓ (US qt, Imp qt)	4.8 (5.1, 4.2)
	When replacing engine oil and oil filter			ℓ (US qt, Imp qt)	4.2 (4.4, 3.7)
	When replacing engine oil only			ℓ (US qt, Imp qt)	4.0 (4.2, 3.5)

- Turbo model

Lubrication method				Forced lubrication
Oil pump	Pump type			Trochoid type
	Number of teeth	Inner rotor		9
		Outer rotor		10
	Outer rotor diameter × thickness mm (in)			78 × 11 (3.07 × 0.43)
	Tip clearance between inner and outer rotors mm (in)		Standard	0.04 — 0.14 (0.0016 — 0.0055)
	Case clearance between outer rotor and pump case mm (in)		Standard	0.10 — 0.175 (0.0039 — 0.0069)
	Side clearance between inner rotor and pump case mm (in)		Standard	0.02 — 0.07 (0.0008 — 0.0028)
	Relief valve spring	Free length mm (in)		73.7 (2.902)
		Installed length mm (in)		54.7 (2.154)
		Load when installed N (kgf, lbf)		93.1 (9.49, 20.93)
	Performance (Oil temperature 80°C (176°F))	600 rpm	Discharge pressure kPa (kg/cm^2, psi)	98 (1.0, 14)
			Discharge rate ℓ (US qt, Imp qt)/min.	6.4 (6.8, 5.6) or more
		6,000 rpm	Discharge pressure kPa (kg/cm^2, psi)	392 (4.0, 56.8)
			Discharge rate ℓ (US qt, Imp qt)/min.	63.0 (66.6, 55.4) or more
	Relief valve working pressure kPa (kg/cm^2, psi)			538 (5.5, 78)
Oil filter	Filter type			Full-flow filter type
	Filtration area cm^2 (sq in)		Outer diameter: 68 mm (2.68 in) (black)	800 (124)
			Outer diameter: 67.4 mm (2.65 in) (blue)	555 (86)
	By-pass valve opening pressure kPa (kg/cm^2, psi)			160 (1.63, 23.2)
	Outer diameter × width mm (in)		Outer diameter: 68 mm (2.68 in) (black)	68 × 65 (2.68 × 2.56)
			Outer diameter: 67.4 mm (2.65 in) (blue)	67.4 × 65.3 (2.65 × 2.57)
	Installation screw specifications			M 20 × 1.5
Oil pressure switch	Type			Immersed contact point type
	Operating voltage — power consumption			12 V — 3.4 W or less
	Warning light operating pressure kPa (kg/cm^2, psi)			14.7 (0.15, 2.1)
	Proof pressure kPa (kg/cm^2, psi)			981 (10, 142) or more
Engine oil	Total capacity (at overhaul) ℓ (US qt, Imp qt)			5.2 (5.5, 4.6)
	When replacing engine oil and oil filter ℓ (US qt, Imp qt)			4.3 (4.5, 3.8)
	When replacing engine oil only ℓ (US qt, Imp qt)			4.0 (4.2, 3.5)

Recommended oil:

Oil corresponding to either of the following standards.

- ***Those with SM "Energy Conserving" logo in case of API standard.***
- ***Those with GF-4 "starburst mark" displayed on top of the container in case of ILSAC standard.***

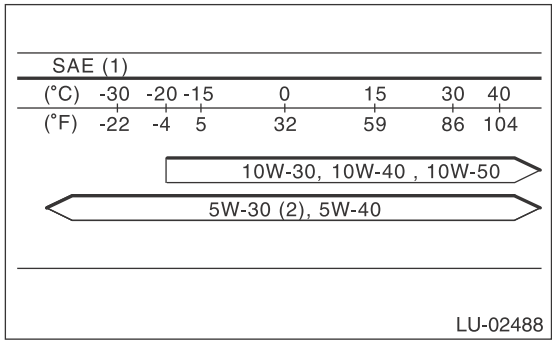

(1) SAE viscosity No. and applicable temperature
(2) Recommended

CAUTION:
It is acceptable to fill an engine with oil of another brand when replacing the oil, but make sure to use an oil with an API standard and SAE viscosity number specified by Subaru.

NOTE:
• The proper viscosity oil helps the engine maintain its ideal temperature, and cranking speed increased by reducing viscosity friction in hot condition.
• If the vehicle is used in regions of high temperatures or in other severe environments, use oil with the viscosities shown below.
API standard: SM or SL
SAE viscosity No.: 30, 40, 10W-50, 20W-40, 20W-50

B: COMPONENT

- 2.5 L non-turbo model

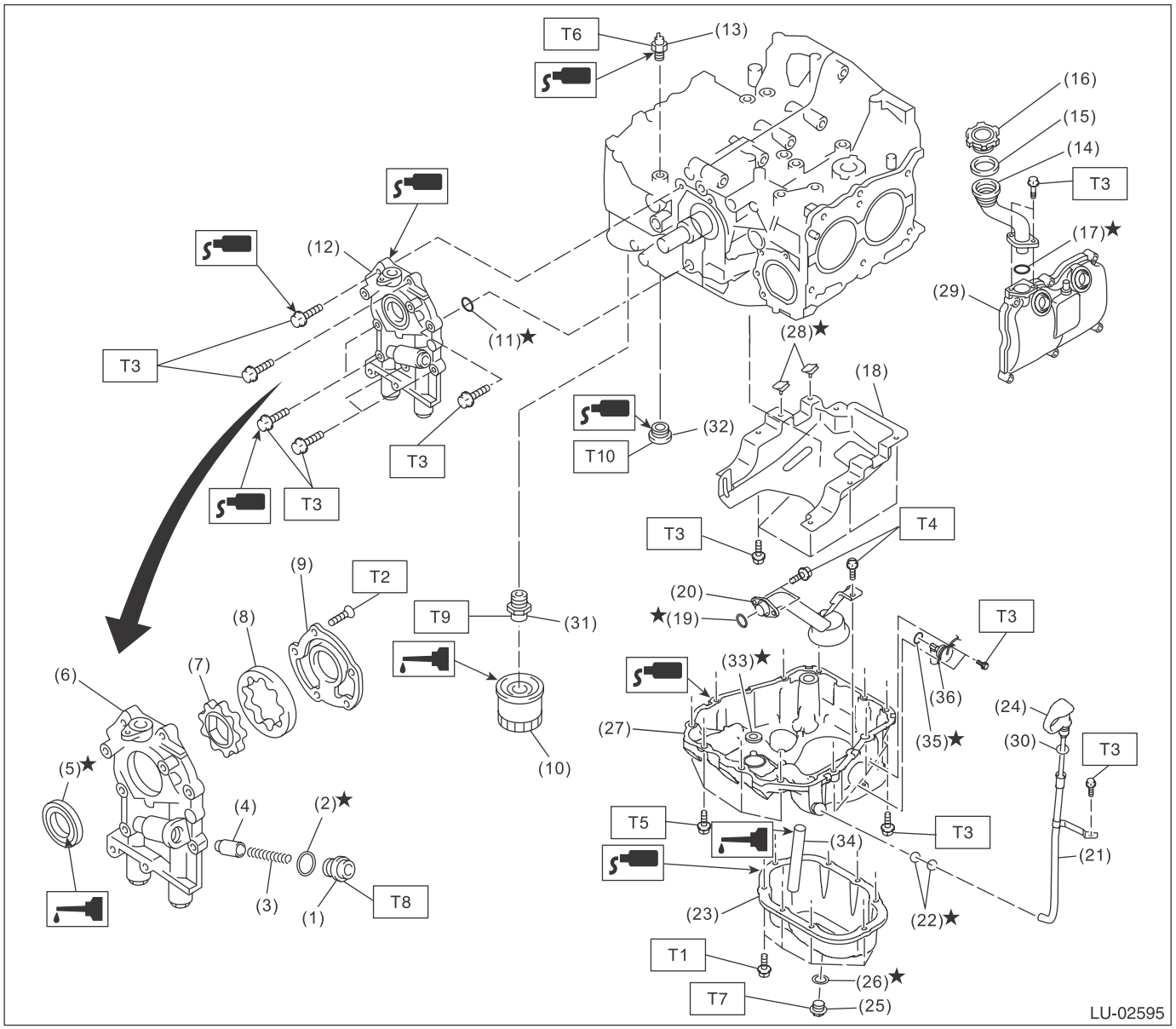

(1) PLUG
(2) Gasket
(3) Relief valve spring
(4) Relief valve
(5) Front oil seal
(6) Oil pump case
(7) Inner rotor
(8) Outer rotor
(9) Oil pump cover
(10) Oil filter
(11) O-ring
(12) Oil pump ASSY
(13) Oil pressure switch
(14) Oil filler duct
(15) Gasket
(16) Oil filler cap
(17) O-ring
(18) Baffle plate
(19) O-ring
(20) Oil strainer
(21) Oil level gauge guide
(22) O-ring
(23) Oil pan
(24) Oil level gauge
(25) Drain plug
(26) Drain plug gasket
(27) Cylinder block lower
(28) Seal
(29) Rocker cover
(30) O-ring
(31) Oil filter connector
(32) PLUG
(33) O-ring
(34) Oil drain pipe
(35) O-ring
(36) Oil level switch

Tightening torque:N·m (kgf-m, ft-lb)	
T1:	*5 (0.5, 3.7)*
T2:	*5.4 (0.6, 4.0)*
T3:	*6.4 (0.7, 4.7)*
T4:	*10 (1.0, 7.4)*
T5:	*16 (1.6, 11.8)*
T6:	*25 (2.5, 18.4)*
T7:	*41.7 (4.3, 30.8)*
T8:	*44 (4.5, 32.5)*
T9:	*45 (4.6, 33.2)*
T10:	*70 (7.1, 51.6)*

- Turbo model

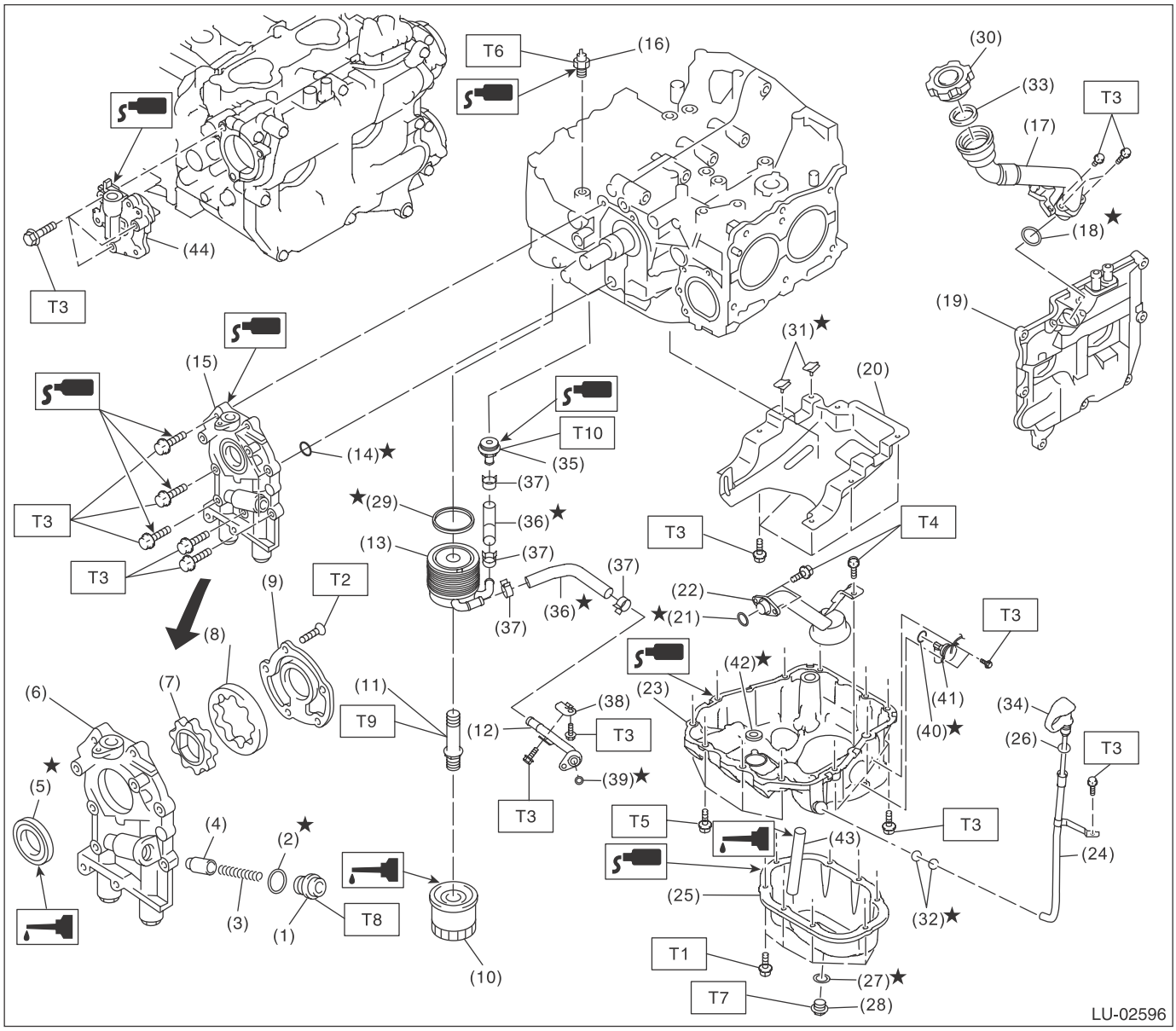
T6
(16)
(30)
(33)
T3
(17)
(18)★
(19)
(44)
T3
(31)★
(20)
(15)
T10
(14)★
(35)
(37)
★(29)
(36)★
T3
T4
(13)
(37)
(37)
T3
(9)
T2
(22)
(36)★
★(21)
(37)
T3
(8)
(42)★
(7)
(11)
(23)
(41)
(34)
(6)
(38)
T9
(12)
T3
(40)★
(26)
T3
★
(5)
(39)★
T3
T5
T3
(4)
(2)★
(43)
(24)
(25)
(3)
(1)
T8
(32)★
T1
(10)
(27)★
T7
(28)
LU-02596

(1) PLUG
(2) Gasket
(3) Relief valve spring
(4) Relief valve
(5) Front oil seal
(6) Oil pump case
(7) Inner rotor
(8) Outer rotor
(9) Oil pump cover
(10) Oil filter
(11) Oil cooler connector
(12) Oil cooler pipe
(13) Oil cooler
(14) O-ring
(15) Oil pump ASSY
(16) Oil pressure switch
(17) Oil filler duct
(18) O-ring
(19) Rocker cover
(20) Baffle plate
(21) O-ring
(22) Oil strainer
(23) Cylinder block lower
(24) Oil level gauge guide
(25) Oil pan
(26) Oil level gauge
(27) Drain plug gasket
(28) Drain plug
(29) Gasket
(30) Oil filler cap
(31) Seal
(32) O-ring
(33) Gasket
(34) O-ring
(35) PLUG
(36) Oil cooler hose
(37) Clip
(38) Oil cooler pipe stay
(39) O-ring
(40) O-ring
(41) Oil level switch
(42) O-ring
(43) Oil drain pipe
(44) Scavenge pump

Tightening torque:N·m (kgf-m, ft-lb)	
T1:	*5 (0.5, 3.7)*
T2:	*5.4 (0.6, 4.0)*
T3:	*6.4 (0.7, 4.7)*
T4:	*10 (1.0, 7.0)*
T5:	*16 (1.6, 11.8)*
T6:	*25 (2.5, 18.4)*
T7:	*41.7 (4.3, 30.8)*
T8:	*44 (4.5, 32.5)*
T9:	*54 (5.5, 39.8)*
T10:	*69 (7.0, 50.9)*

C: CAUTION

- Wear appropriate work clothing, including a cap, protective goggles and protective shoes when performing any work.
- Remove contamination including dirt and corrosion before removal, installation or disassembly.
- Keep the disassembled parts in order and protect them from dust and dirt.
- Before removal, installation or disassembly, be sure to clarify the failure. Avoid unnecessary removal, installation, disassembly and replacement.
- Vehicle components are extremely hot after driving. Be wary of receiving burns from heated parts.
- Be sure to tighten fasteners including bolts and nuts to the specified torque.
- Place shop jacks or rigid racks at the specified points.
- Before disconnecting connectors of sensors or units, be sure to disconnect the ground cable from battery.
- If the engine oil is spilt over exhaust pipe or the under cover, wipe it off with cloth to avoid emitting smoke or causing a fire.
- Prepare a container and cloth when performing work which oil possibly spills. If oil spills, wipe it off immediately to prevent from penetrating into floor or flowing out for environmental protection.
- Follow all government and local regulations concerning disposal of refuse when disposing of oil.

D: PREPARATION TOOL

1. SPECIAL TOOL

ILLUSTRATION	TOOL NUMBER	DESCRIPTION	REMARKS
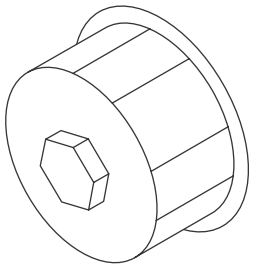 ST18332AA000	18332AA000	OIL FILTER WRENCH	Used for removing and installing black oil filter (outer diameter: 68 mm (2.68 in)).
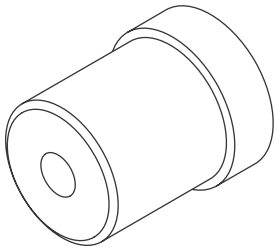 ST-499587100	499587100	OIL SEAL INSTALLER	Used for installing oil pump oil seal.

2. GENERAL TOOL

TOOL NAME	REMARKS
Oil filter wrench (65/67 mm 14 flutes)	Used for removing and installing blue oil filter (outer diameter: 67.4 mm (2.65 in)).
Circuit tester	Used for measuring resistance and voltage.

2. Oil Pressure System

A: WIRING DIAGRAM

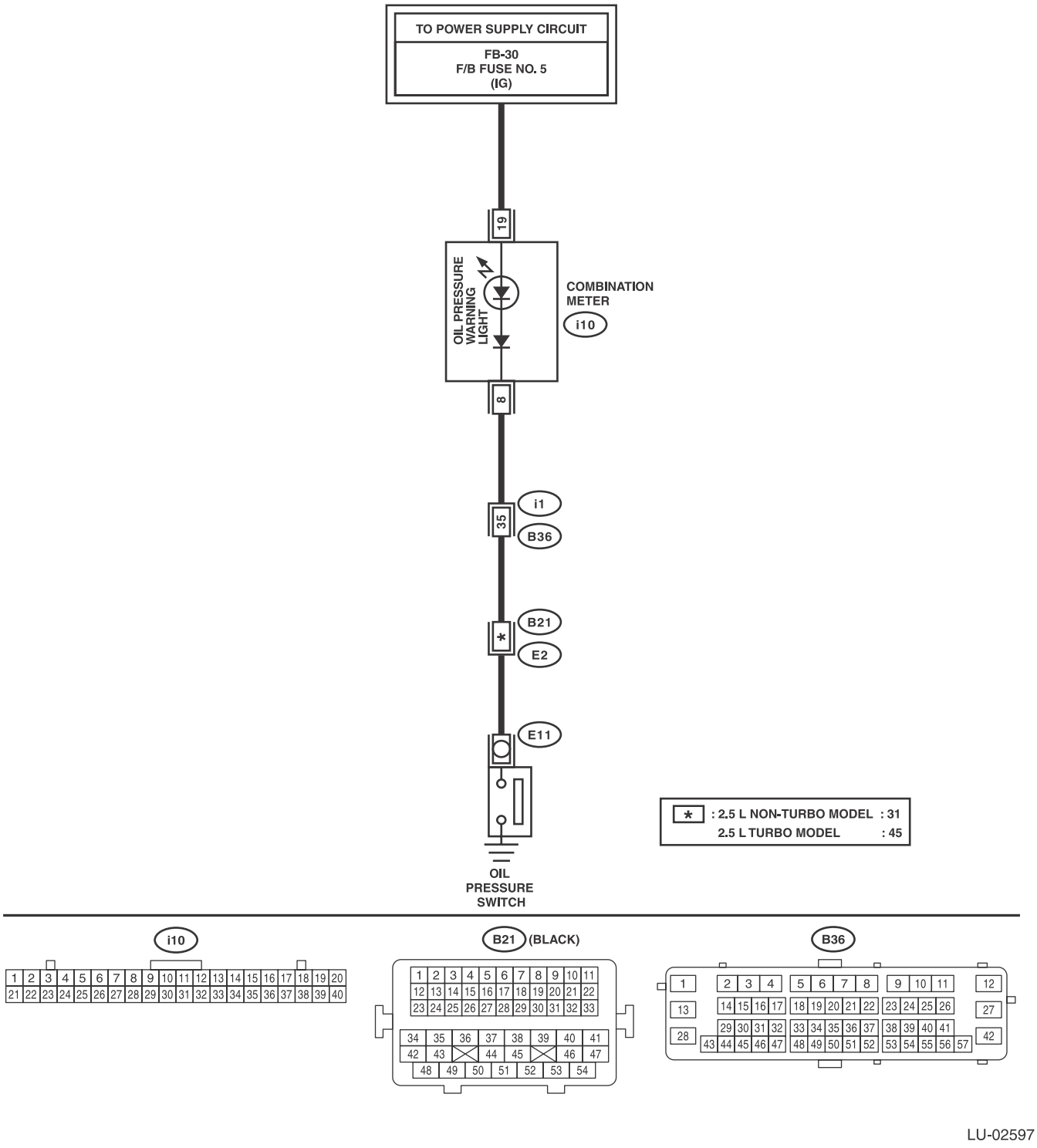

LU-02597

B: INSPECTION

Step		Check	Yes	No
1	**CHECK COMBINATION METER.** 1) Turn the ignition switch to ON. (engine OFF) 2) Check the warning light in the combination meter.	Does the warning light illuminate?	Go to step **2**.	Repair or replace the combination meter. <Ref. to IDI-10, INSPECTION, Combination Meter System.>
2	**CHECK HARNESS CONNECTOR BETWEEN COMBINATION METER AND OIL PRESSURE SWITCH.** 1) Turn the ignition switch to OFF. 2) Disconnect the connector from oil pressure switch. 3) Turn the ignition switch to ON. 4) Measure the voltage of harness between oil pressure switch connector and chassis ground. ***Connector & terminal*** ***(E11) No. 1 (+) — Chassis ground (–):***	Is the voltage 10 V or more?	Replace the oil pressure switch. <Ref. to LU(H4SO)-23, Oil Pressure Switch.>	Go to step **3**.
3	**CHECK COMBINATION METER.** 1) Turn the ignition switch to OFF. 2) Remove the combination meter. 3) Measure the resistance of combination meter. ***Terminals*** ***(i10) No. 8 — No. 19:***	Is the resistance less than 10 Ω?	Repair the harness and connector. NOTE: In this case, repair the following item: • Open circuit of harness between combination meter and oil pressure switch • Poor contact of combination meter connector • Poor contact of oil pressure switch connector • Poor contact of coupling connector	Repair or replace the combination meter. <Ref. to IDI-10, INSPECTION, Combination Meter System.>

3. Engine Oil

A: INSPECTION

CAUTION:
If the engine oil is spilt over exhaust pipe or the under cover, wipe it off with cloth to avoid emitting smoke or causing a fire.
1) Park the vehicle on a level surface.
2) Remove the oil level gauge and wipe away the oil.
3) Reinsert the oil level gauge all the way. Be sure that the oil level gauge is correctly inserted and properly orientated.
4) Pull out the oil level gauge again, and check the oil level. If the engine oil level is below “L” line, check for oil leakage from engine and add oil to bring the level up to “F” line.
5) Start the engine to circulate the oil in engine room.
6) After turning off the engine, wait a few minutes for the oil to return to the oil pan before checking the level.

NOTE:
• Just after driving or while the engine is warm, engine oil level shows in the range between the “F” line and the notch mark. This is caused by thermal expansion of engine oil.
• To prevent overfilling of engine oil, do not add oil above “F” line when the engine is cold.
• As the oil level gauge is used for daily inspection, “F” line and “L” line are set assuming that the engine is cold.

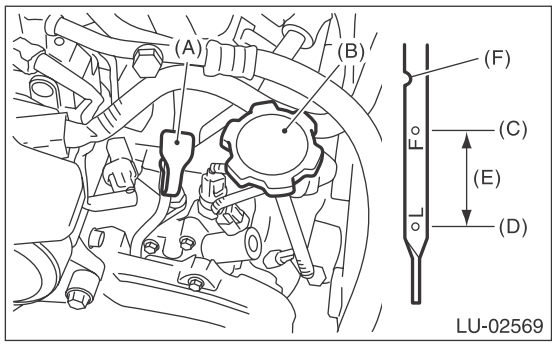

(A) Oil level gauge
(B) Oil filler cap
(C) “F” line
(D) “L” line
(E) Approx. 1.0 ℓ (1.1 US qt, 0.9 Imp qt)
(F) Notch mark

B: REPLACEMENT

CAUTION:
If the engine oil is spilt over exhaust pipe or the under cover, wipe it off with cloth to avoid emitting smoke or causing a fire.
1) Open the oil filler cap for quick draining of engine oil.
2) Lift up the vehicle.
3) Remove the service hole cover of under cover. (Large under cover model)

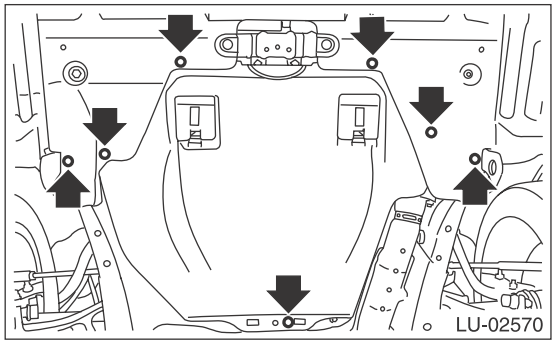

4) Drain engine oil by loosening the drain plug.

NOTE:
Prepare the container for draining of engine oil.
• Models with small and medium under cover

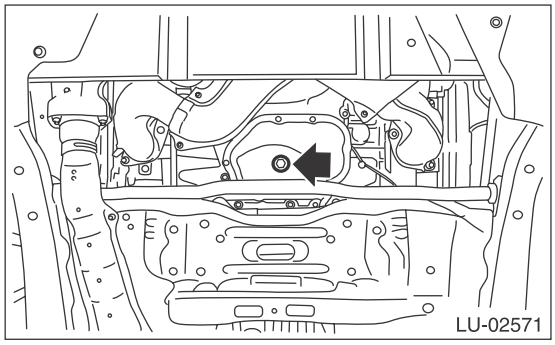

• Models with large under cover

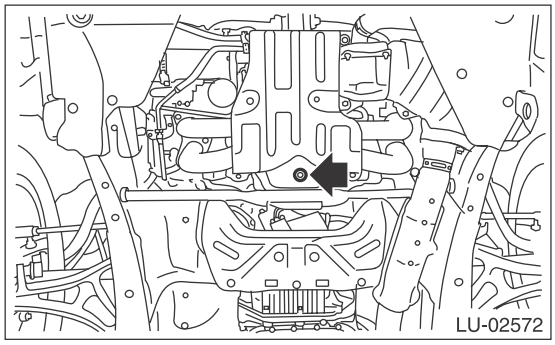

5) Tighten the drain plug after draining engine oil.

NOTE:
Use a new drain plug gasket.

Tightening torque:
41.7 N·m (4.3 kgf-m, 30.8 ft-lb)

- Models with small and medium under cover

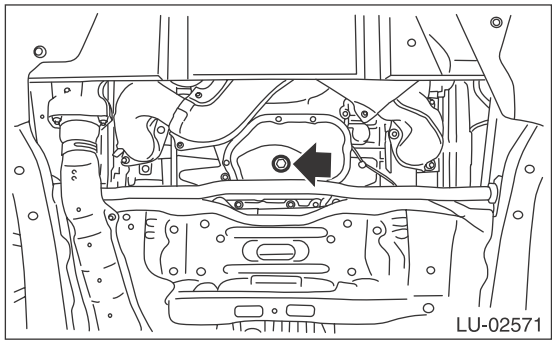

- Models with large under cover

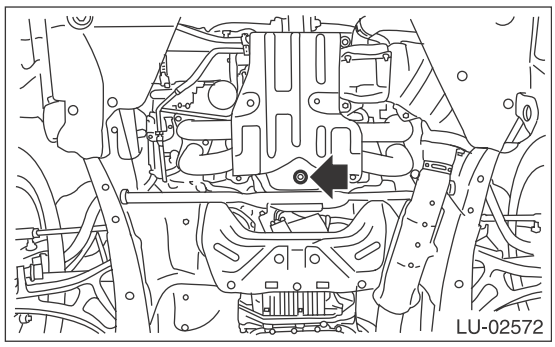

6) Install the service hole cover of under cover. (Large under cover model)

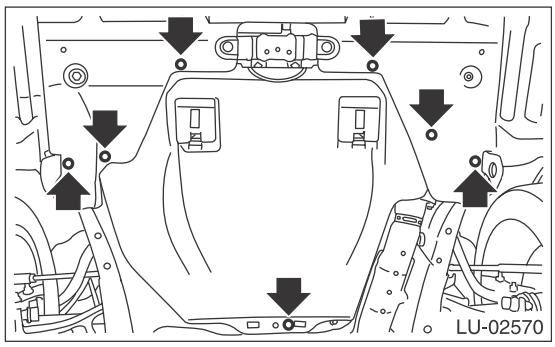

7) Lower the vehicle.
8) Using engine oil of proper quality and viscosity, fill engine oil through the oil filler duct to the “F” line on oil level gauge. Make sure that the vehicle is parked on a level surface when checking oil level.

Recommended oil:
Refer to “SPECIFICATION” for recommended oil. <Ref. to LU(H4SO)-2, SPECIFICATION, General Description.>

Engine oil capacity:
Refer to “SPECIFICATION” for engine oil capacity. <Ref. to LU(H4SO)-2, SPECIFICATION, General Description.>

9) Close the oil filler cap.
10) Start the engine to circulate the oil in engine room.
11) After stopping the engine, recheck the oil level. If necessary, add engine oil up to the “F” line on oil level gauge.

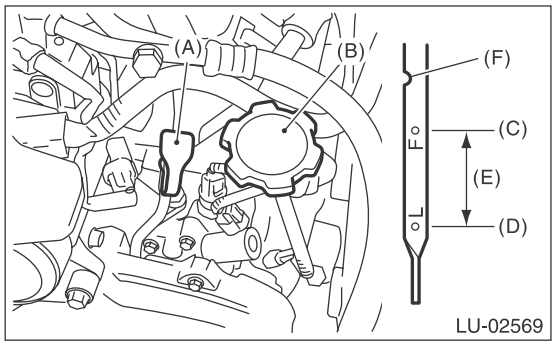

(A) Oil level gauge
(B) Oil filler cap
(C) “F” line
(D) “L” line
(E) Approx. 1.0 ℓ (1.1 US qt, 0.9 Imp qt)
(F) Notch mark

4. Oil Pump

A: REMOVAL

1) Remove the collector cover. (turbo model)
2) Disconnect the ground cable from battery.

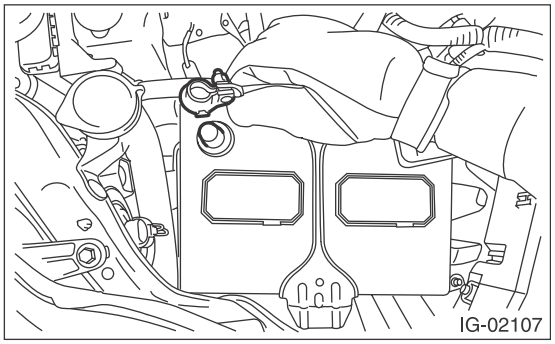

3) Remove the radiator. <Ref. to CO(H4SO)-20, REMOVAL, Radiator.> <Ref. to CO(H4DOTC)-21, REMOVAL, Radiator.>
4) Remove the crankshaft position sensor. <Ref. to FU(H4SO)-22, REMOVAL, Crankshaft Position Sensor.> <Ref. to FU(H4DOTC)-33, REMOVAL, Crankshaft Position Sensor.>
5) Remove the water pump. <Ref. to CO(H4SO)-16, REMOVAL, Water Pump.> <Ref. to CO(H4DOTC)-16, REMOVAL, Water Pump.>
6) Remove the crank sprocket. <Ref. to ME(H4SO)-53, REMOVAL, Crank Sprocket.> <Ref. to ME(H4DOTC)-61, REMOVAL, Crank Sprocket.>

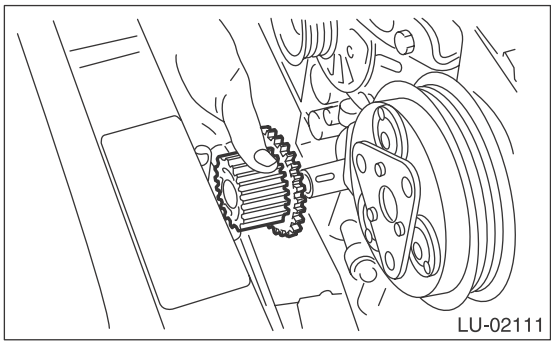

7) Remove the bolts which install oil pump onto cylinder block.

NOTE:
When disassembling and checking the oil pump, loosen the relief valve plug before removing the oil pump.

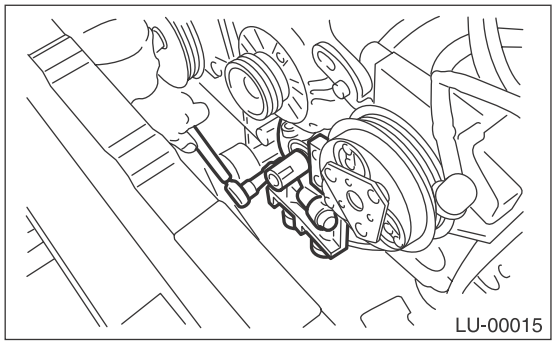

8) Remove the oil pump by using flat tip screwdriver.

CAUTION:
Be careful not to damage the mating surface of the cylinder block and oil pump.

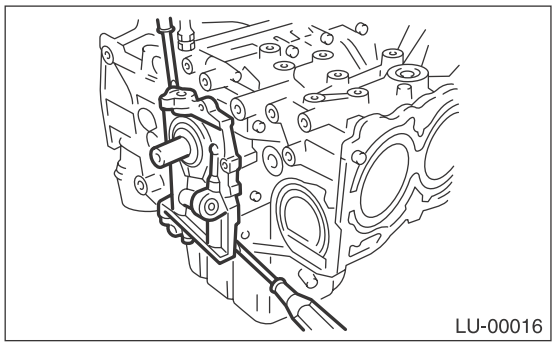

9) Remove the front oil seal from the oil pump.

B: INSTALLATION

1) Using the ST, install the front oil seal.
ST 499587100 OIL SEAL INSTALLER

NOTE:
Use a new front oil seal.

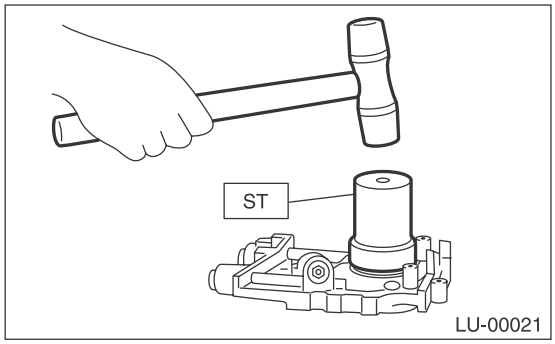

2) Apply liquid gasket to the mating surfaces of oil pump.

NOTE:
Install within 5 min. after applying liquid gasket.

Liquid gasket:
THREE BOND 1217G (Part No. K0877Y0100) or equivalent

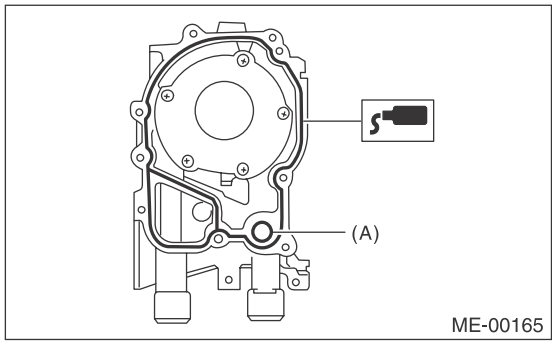

(A) O-ring

3) Apply a coat of engine oil to the inside of front oil seal.

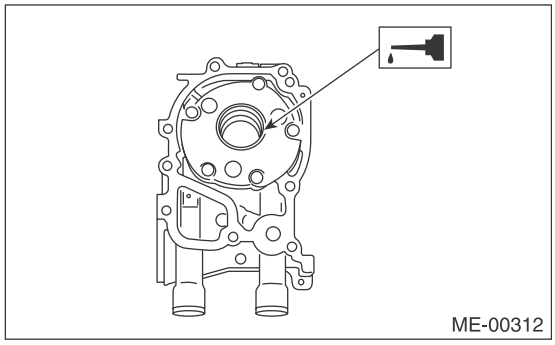

4) Install the oil pump to cylinder block.

CAUTION:
• Be careful not to damage the front oil seal during installation.
• Make sure the front oil seal lip is not folded.

NOTE:
• Align the flat surface of oil pump's inner rotor with flat surface of crankshaft before installation.
• Use new O-rings.
• Do not forget to assemble O-rings.

5) Apply liquid gasket to the three bolts thread shown in figure. (when reusing bolts)

Liquid gasket:
THREE BOND 1324 (Part No. 004403042) or equivalent

Tightening torque:
6.4 N·m (0.7 kgf-m, 4.7 ft-lb)

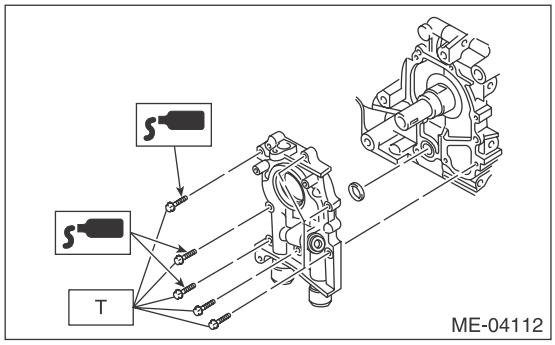

6) Install the crank sprocket. <Ref. to ME(H4SO)-53, INSTALLATION, Crank Sprocket.> <Ref. to ME(H4DOTC)-61, INSTALLATION, Crank Sprocket.>
7) Install the water pump. <Ref. to CO(H4SO)-16, INSTALLATION, Water Pump.> <Ref. to CO(H4DOTC)-16, INSTALLATION, Water Pump.>
8) Install the crankshaft position sensor. <Ref. to FU(H4SO)-22, INSTALLATION, Crankshaft Position Sensor.> <Ref. to FU(H4DOTC)-33, INSTALLATION, Crankshaft Position Sensor.>
9) Install the radiator. <Ref. to CO(H4SO)-21, INSTALLATION, Radiator.> <Ref. to CO(H4DOTC)-22, INSTALLATION, Radiator.>
10) Connect the ground cable to battery.

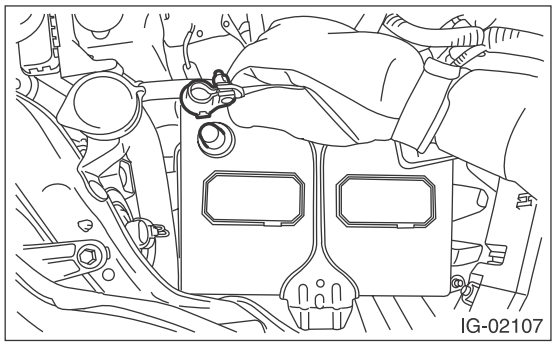

C: DISASSEMBLY

Remove the screw which secures oil pump cover and then disassemble oil pump. Inscribe alignment marks on the inner and outer rotors so that they can be replaced in their original positions during reassembly.

NOTE:
Before disassembling the oil pump, remove the relief valve.

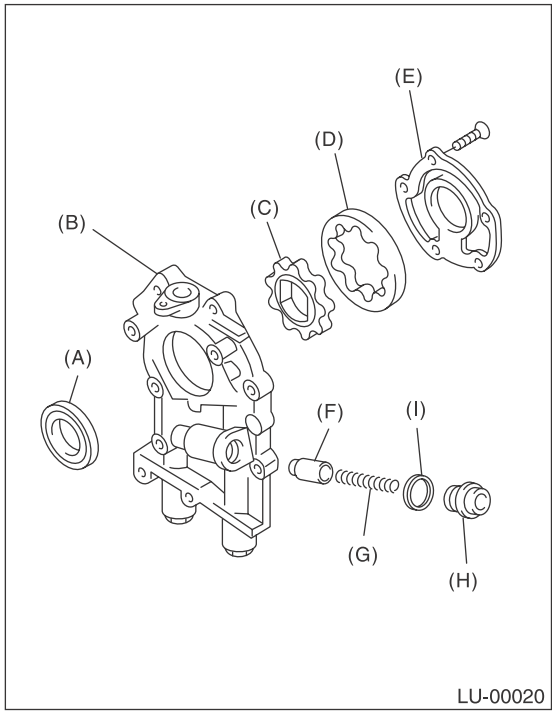

(A) Front oil seal
(B) Oil pump case
(C) Inner rotor
(D) Outer rotor
(E) Oil pump cover
(F) Relief valve
(G) Relief valve spring
(H) Plug
(I) Gasket

D: ASSEMBLY

1) Using the ST, install the front oil seal.
ST 499587100 OIL SEAL INSTALLER

NOTE:
Use a new front oil seal.

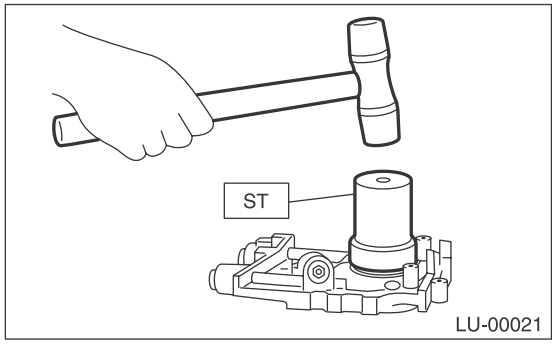

2) Apply a coat of engine oil to inner and outer rotors.
3) Install the inner and outer rotors.
4) Install the oil relief valve and relief valve spring and plug.

NOTE:
Use a new gasket.
5) Install the oil pump cover.

Tightening torque:
T1: 5.4 N·m (0.6 kgf-m, 4.0 ft-lb)
T2: 44 N·m (4.5 kgf-m, 32.5 ft-lb)

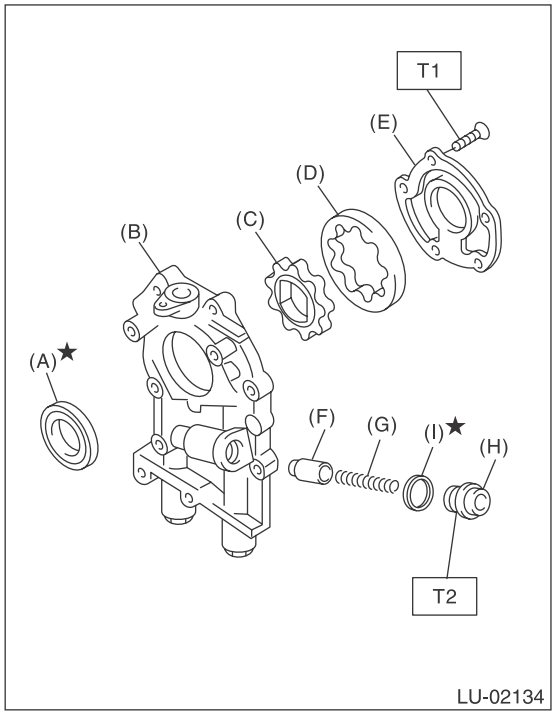

(A) Front oil seal
(B) Oil pump case
(C) Inner rotor
(D) Outer rotor
(E) Oil pump cover
(F) Relief valve
(G) Relief valve spring
(H) PLUG
(I) Gasket

E: INSPECTION

1. TIP CLEARANCE

Measure the tip clearance of rotors. If the clearance is out of standard, replace the rotors as a set.

Tip clearance between inner and outer rotors:
Standard
0.04 — 0.14 mm (0.0016 — 0.0055 in)

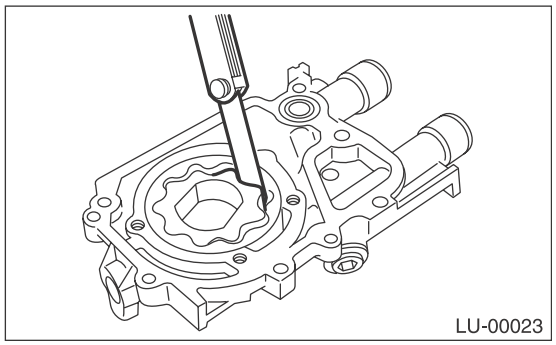

2. CASE CLEARANCE

Measure the clearance between outer rotor and oil pump case. If clearance is out of standard, replace the oil pump case.

Case clearance between outer rotor and pump case:
Standard
0.10 — 0.175 mm (0.0039 — 0.0069 in)

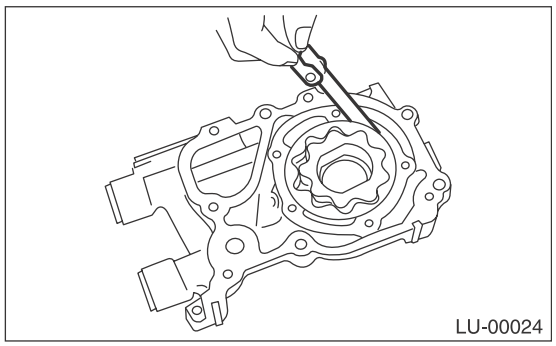

3. SIDE CLEARANCE

Measure the gap between the inner rotor and the oil pump case to measure the clearance between the inner rotor and the oil pump cover as shown in the figure. If clearance is out of standard, replace the rotor or the oil pump case.

Side clearance between inner rotor and pump case:
Standard
0.02 — 0.07 mm (0.0008 — 0.0028 in)

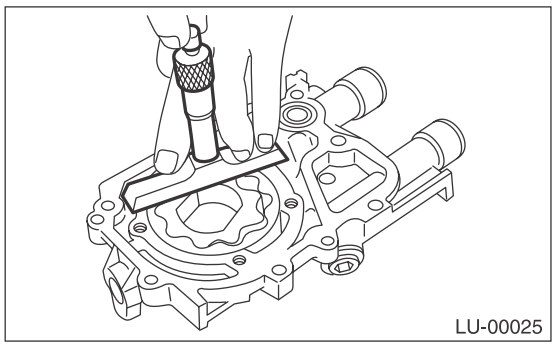

4. OIL RELIEF VALVE

Check the valve for assembly condition and damage, and the relief valve spring for damage and deterioration. Replace the parts if defective.

Relief valve spring:
Free length
73.7 mm (2.902 in)
Installed length
54.7 mm (2.154 in)
Load when installed
93.1 N (9.49 kgf, 20.93 lbf)

5. OIL PUMP CASE

Check for worn shaft hole, clogged oil passage, worn rotor chamber, cracks and other faults.

6. FRONT OIL SEAL

Check the front oil seal lips for deformation and hardening, wear.

5. Oil Pan and Strainer

A: REMOVAL

1. OIL PAN

1) Disconnect the ground cable from battery.

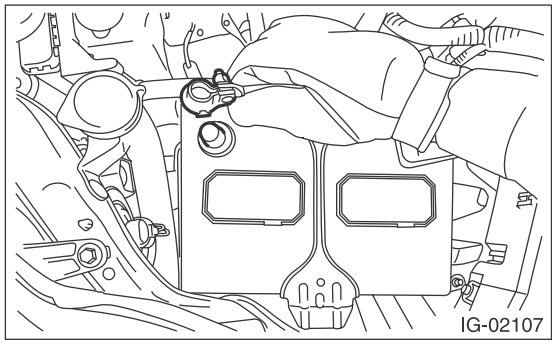

2) Lift up the vehicle.
3) Remove the under cover. <Ref. to EI-35, REMOVAL, Front Under Cover.>
4) Drain the engine oil. <Ref. to LU(H4SO)-12, REPLACEMENT, Engine Oil.>
5) Remove the front exhaust pipe. <Ref. to EX(H4SO)-4, REMOVAL, Front Exhaust Pipe.> <Ref. to EX(H4DOTC)-5, REMOVAL, Front Exhaust Pipe.>
6) Remove the bolts which secure the oil pan to the cylinder block lower.

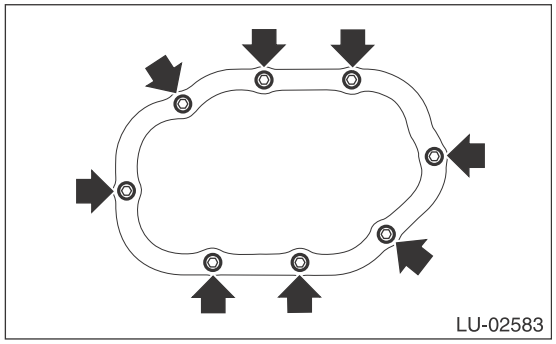

7) Insert an oil pan cutter blade into the gap between cylinder block lower and oil pan, and remove the oil pan.

CAUTION:
Do not use a screwdriver or similar tool in place of oil pan cutter.

2. CYLINDER BLOCK LOWER

1) Remove the collector cover. (turbo model)
2) Disconnect the ground cable from battery.

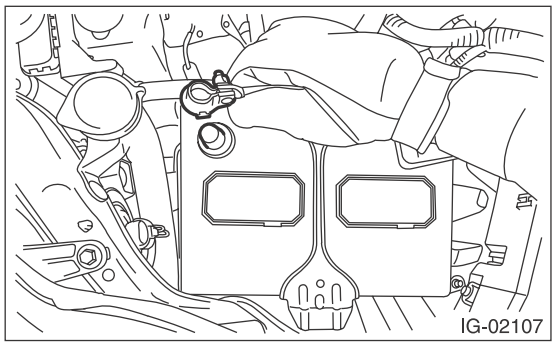

3) Remove the air intake boot assembly. (2.5 L non-turbo model) <Ref. to IN(H4SO)-8, REMOVAL, Air Intake Boot.>
4) Remove the intercooler. (turbo model) <Ref. to IN(H4DOTC)-17, REMOVAL, Intercooler.>
5) Support the engine with a lifting device and wire ropes.

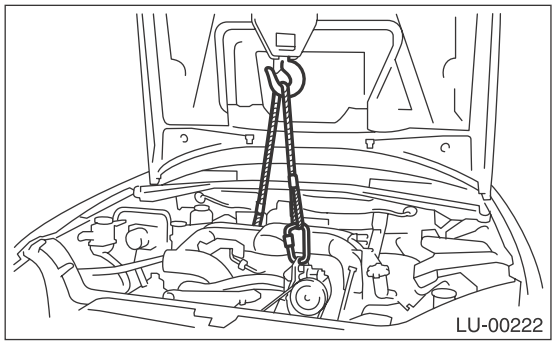

6) Lift up the vehicle.

CAUTION:
When lifting up the vehicle, raise up wire ropes at the same time.

7) Remove the oil pan. <Ref. to LU(H4SO)-18, OIL PAN, REMOVAL, Oil Pan and Strainer.>
8) Remove the engine mounting. <Ref. to ME(H4SO)-38, REMOVAL, Engine Mounting.> <Ref. to ME(H4DOTC)-38, REMOVAL, Engine Mounting.>
9) Remove the bolts which secure the cylinder block lower to the cylinder block.

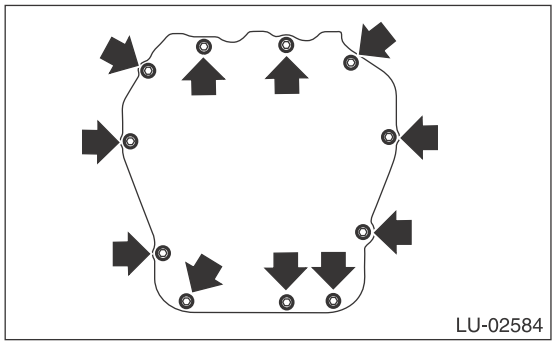

10) Insert a flat tip screwdriver into the gap between cylinder block and cylinder block lower, and remove the cylinder block lower.

CAUTION:
Insert the flat tip screwdriver to the position shown in the figure, and be careful not to damage the mating surface of the cylinder block and cylinder block lower.

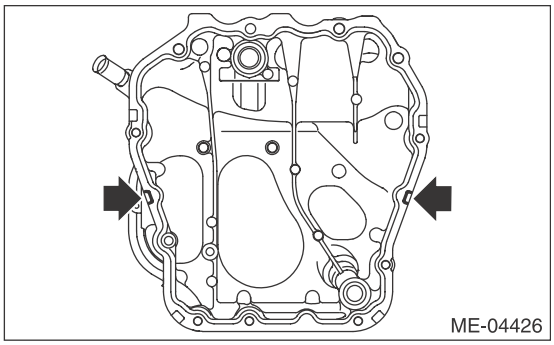

11) Remove the oil strainer from cylinder block lower.
12) Remove the oil level switch from cylinder block lower.
13) Remove the baffle plate.

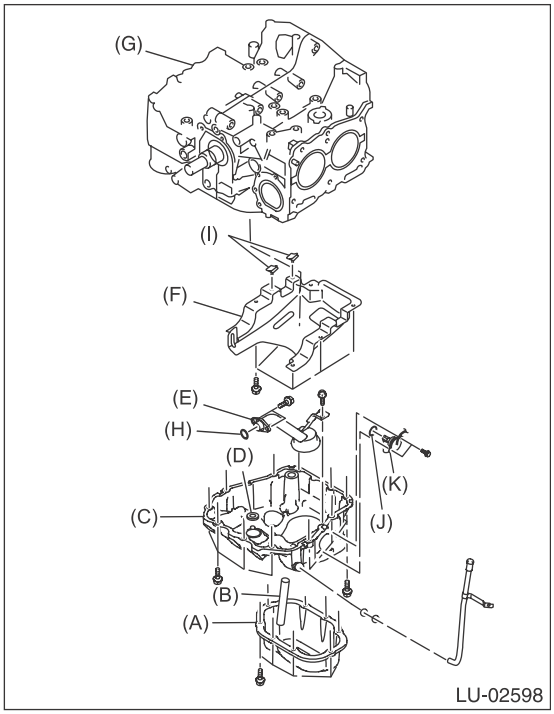

(A) Oil pan
(B) Oil drain pipe
(C) Cylinder block lower
(D) O-ring
(E) Oil strainer
(F) Baffle plate
(G) Cylinder block
(H) O-ring
(I) Seal
(J) O-ring
(K) Oil level switch

B: INSTALLATION

1. OIL PAN

NOTE:
Before installing the oil pan, clean the mating surface of oil pan and cylinder block.
1) Apply liquid gasket to the mating surfaces of oil pan, and install the oil pan.

NOTE:
Install within 5 min. after applying liquid gasket.

Liquid gasket:
THREE BOND 1217G (Part No. K0877Y0100) or equivalent

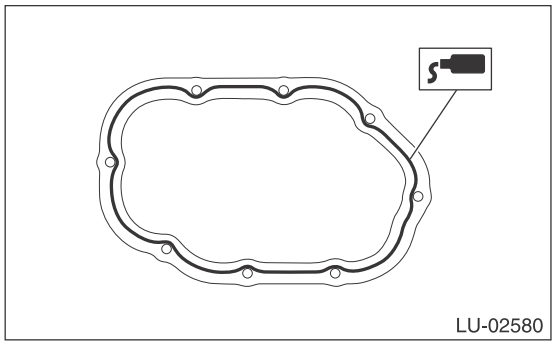

2) Tighten the bolts which install oil pan to cylinder block lower.

Tightening torque:
5 N·m (0.5 kgf-m, 3.7 ft-lb)

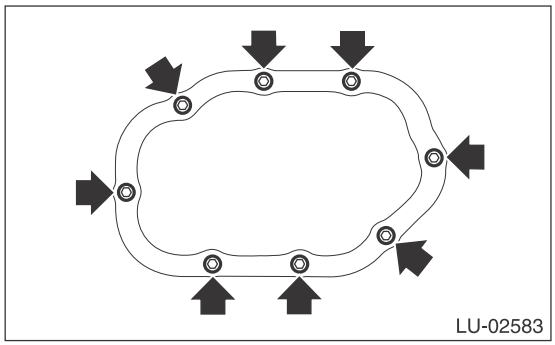

3) Install the front exhaust pipe. <Ref. to EX(H4SO)-5, INSTALLATION, Front Exhaust Pipe.> <Ref. to EX(H4DOTC)-7, INSTALLATION, Front Exhaust Pipe.>
4) Install the under cover. <Ref. to EI-35, REMOVAL, Front Under Cover.>
5) Lower the vehicle.

6) Connect the ground cable to battery.

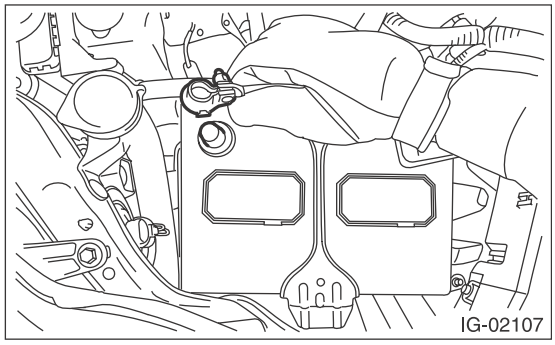

7) Refill the engine oil. <Ref. to LU(H4SO)-12, REPLACEMENT, Engine Oil.>

2. CYLINDER BLOCK LOWER

NOTE:
Before installing the cylinder block lower, clean the mating surface of cylinder block lower and cylinder block.

1) Make sure that the seals (A) are installed securely on the baffle plate in a direction as shown in the figure below.

NOTE:
Use a new seal.

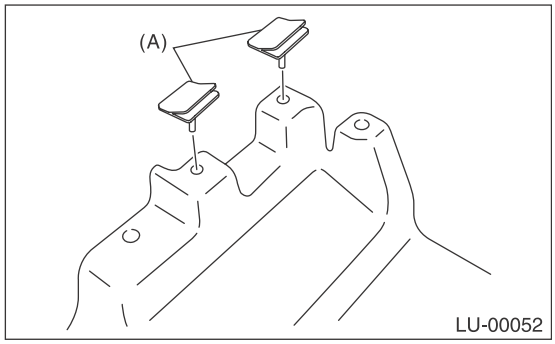

2) Install the baffle plate.

Tightening torque:
6.4 N·m (0.7 kgf-m, 4.7 ft-lb)

3) Install the oil drain pipe to cylinder block lower.
(1) Use a marker to draw reference line (A) on oil drain pipe as shown in the figure.

Protrusion amount L of oil drain pipe:
90.0 mm (3.54 in)

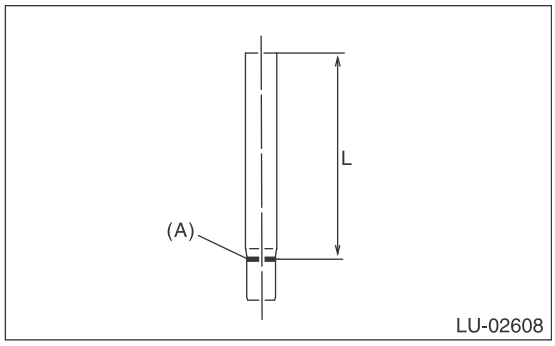

(2) Using a tool such as plastic hammer, insert oil drain pipe to the reference line (A).

NOTE:
Be careful not to deform the oil drain pipe.

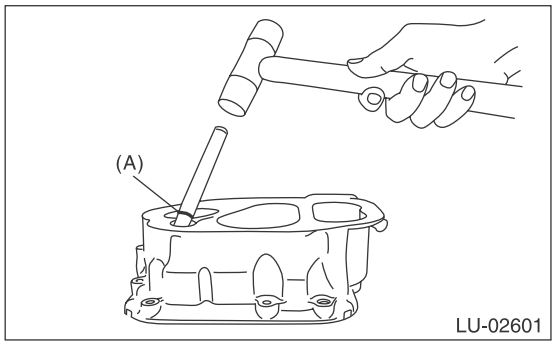

(3) Measure protrusion amount “L” of oil drain pipe shown in the figure to ensure that it is within the standard.

Protrusion amount L of oil drain pipe:
Standard
89.0 — 91.0 mm (3.50 — 3.58 in)

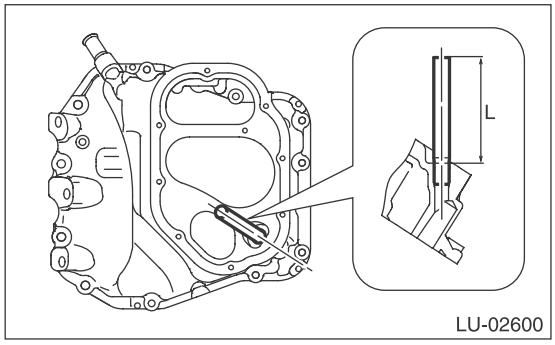

4) Install the oil strainer to cylinder block lower.

NOTE:
Use new O-rings.

Tightening torque:
10 N·m (1.0 kgf-m, 7.4 ft-lb)

5) Install the O-ring to the cylinder block lower.

NOTE:
- Use new O-rings.
- Install the O-ring with the steel area facing up.

6) Apply liquid gasket to the mating surfaces of oil pan, and install the cylinder block lower.

CAUTION:
Be careful not to apply any liquid gasket to the O-ring (A).

NOTE:
Install within 5 min. after applying liquid gasket.

Liquid gasket:
THREE BOND 1217G (Part No. K0877Y0100) or equivalent

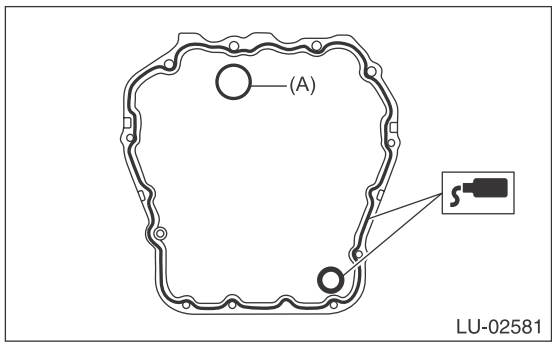

(A) O-ring

7) Tighten the bolts which install cylinder block lower to cylinder block.

Tightening torque:
T1: 5 N·m (0.5 kgf-m, 3.7 ft-lb)
T2: 6.4 N·m (0.7 kgf-m, 4.7 ft-lb)
T3: 10 N·m (1.0 kgf-m, 7.4 ft-lb)
T4: 16 N·m (1.6 kgf-m, 11.8 ft-lb)

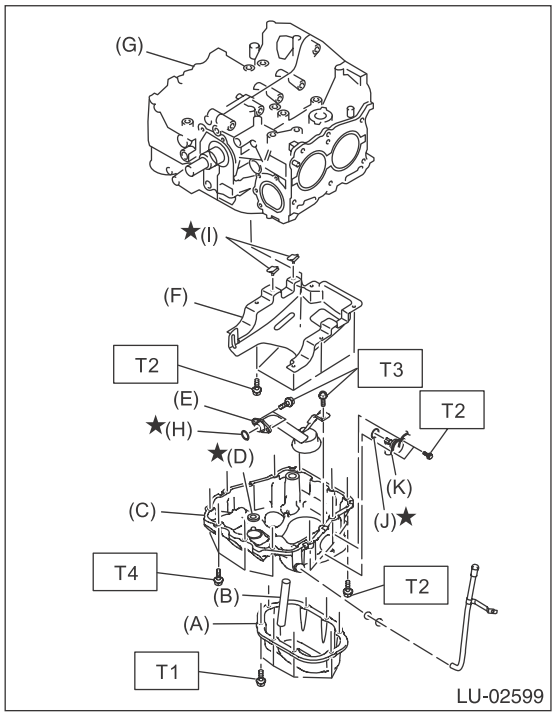

(A) Oil pan
(B) Oil drain pipe
(C) Cylinder block lower
(D) O-ring
(E) Oil strainer
(F) Baffle plate
(G) Cylinder block
(H) O-ring
(I) Seal
(J) O-ring
(K) Oil level switch

8) Install the engine mounting. <Ref. to ME(H4SO)-39, INSTALLATION, Engine Mounting.> <Ref. to ME(H4DOTC)-39, INSTALLATION, Engine Mounting.>
9) Install the oil pan. <Ref. to LU(H4SO)-19, OIL PAN, INSTALLATION, Oil Pan and Strainer.>
10) Lower the vehicle.

CAUTION:
When lowering the vehicle, lower the lift up device and wire ropes at the same time.

11) Remove the lifting device and wire ropes.

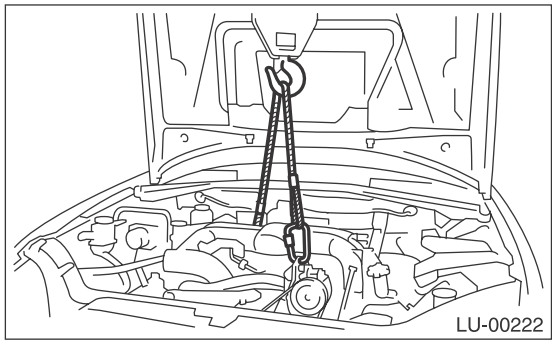

12) Install the intercooler. (turbo model) <Ref. to IN(H4DOTC)-18, INSTALLATION, Intercooler.>
13) Install the air intake boot assembly. (2.5 L non-turbo model) <Ref. to IN(H4SO)-8, INSTALLATION, Air Intake Boot.>
14) Connect the ground cable to battery.

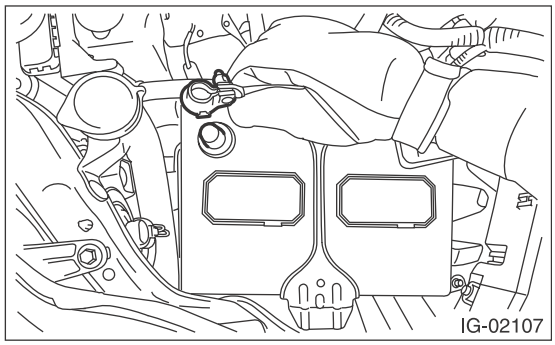

15) Install the collector cover. (turbo model)
16) Refill the engine oil. <Ref. to LU(H4SO)-12, REPLACEMENT, Engine Oil.>

C: INSPECTION

Check that the oil pan, oil strainer and baffle plate do not have deformation, cracks or damage.

6. Oil Pressure Switch

A: REMOVAL

1) Disconnect the ground cable from battery.

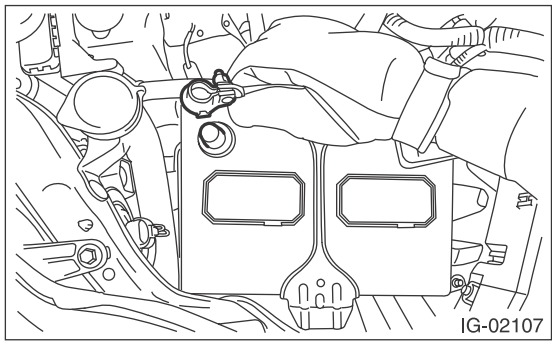

2) Remove the generator. <Ref. to SC(H4SO)-18, REMOVAL, Generator.>

3) Disconnect the terminal from oil pressure switch.

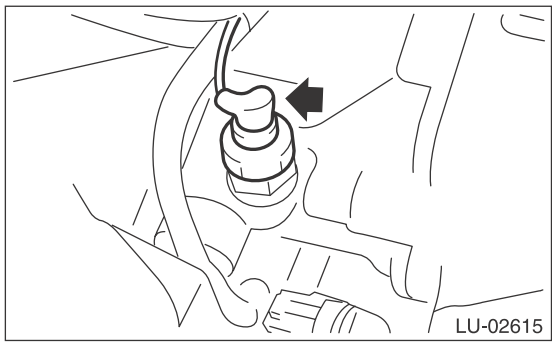

4) Remove the oil pressure switch.

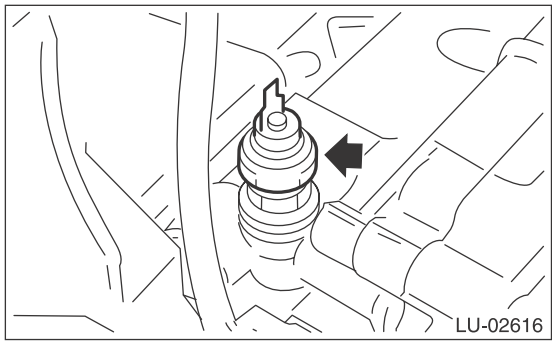

B: INSTALLATION

1) Apply liquid gasket to the oil pressure switch threads.

Liquid gasket:
THREE BOND 1324 (Part No. 004403042) or equivalent

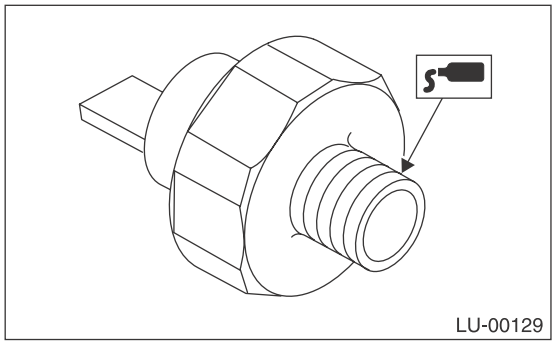

2) Install the oil pressure switch to cylinder block.

Tightening torque:
25 N·m (2.5 kgf-m, 18.4 ft-lb)

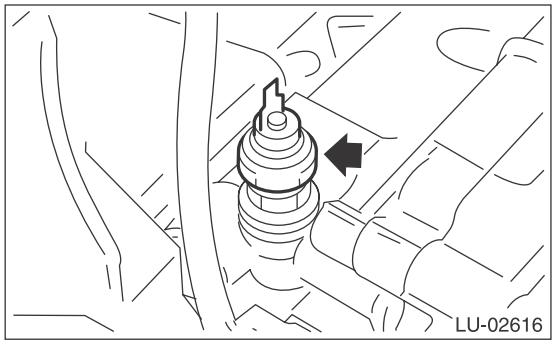

3) Connect the terminal to the oil pressure switch.

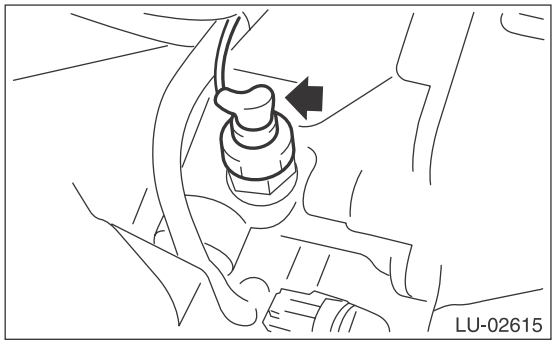

4) Install the generator. <Ref. to SC(H4SO)-18, INSTALLATION, Generator.>

5) Connect the ground cable to battery.

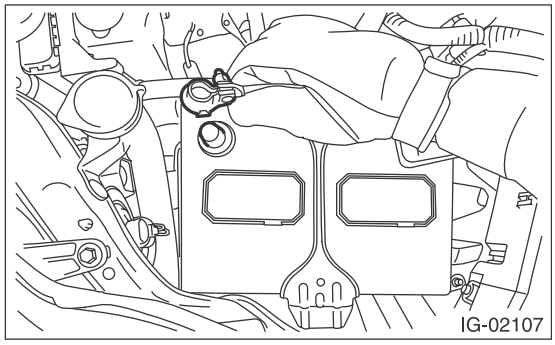

C: INSPECTION

1) Check that the oil pressure switch does not have deformation, cracks or damage.
2) Check the oil pressure switch installation portion for oil leakage and oil seepage.

7. Engine Oil Cooler

A: REMOVAL

CAUTION:
If engine oil is spilt onto the exhaust pipe, wipe it off with cloth to avoid emission of smoke or causing a fire.

NOTE:
Turbo model is equipped with engine oil cooler.
1) Lift up the vehicle.
2) Remove the under cover. <Ref. to EI-35, REMOVAL, Front Under Cover.>
3) Drain engine coolant. <Ref. to CO(H4SO)-14, DRAINING OF ENGINE COOLANT, REPLACEMENT, Engine Coolant.>
4) Remove the front exhaust pipe. <Ref. to EX(H4DOTC)-5, REMOVAL, Front Exhaust Pipe.>
5) Remove the engine oil filter. <Ref. to LU(H4SO)-34, REMOVAL, Engine Oil Filter.>
6) Remove the bolt (B) holding the oil cooler pipe (A) to the oil pump.
7) Remove the oil cooler pipe (A) and oil cooler hose (C).
8) Remove the oil cooler connector (D) and oil cooler (E).

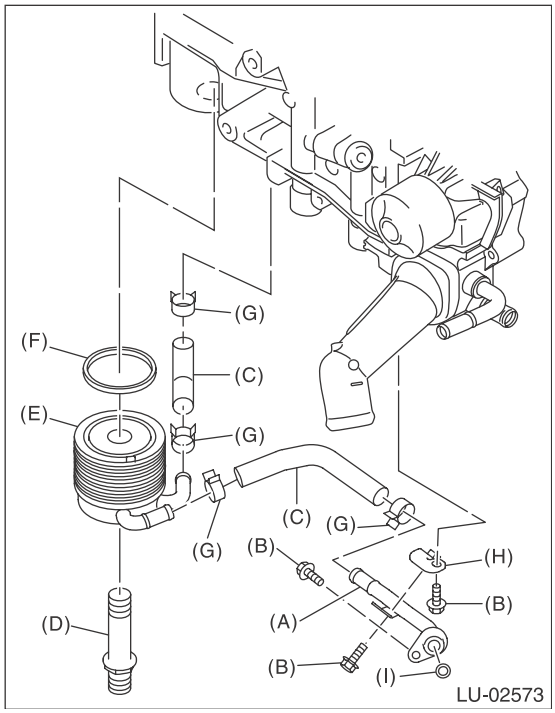

(A) Oil cooler pipe
(B) BOLT
(C) Oil cooler hose
(D) Oil cooler connector
(E) Oil cooler
(F) Gasket
(G) Clip
(H) Oil cooler pipe stay
(I) O-ring

B: INSTALLATION

Install in the reverse order of removal.

NOTE:
- Use new gaskets and O-rings.
- Use a new oil cooler hose.
- After temporarily tightening the bolts on oil cooler pipe, tighten the bolts in alphabetical order shown in the following figure.

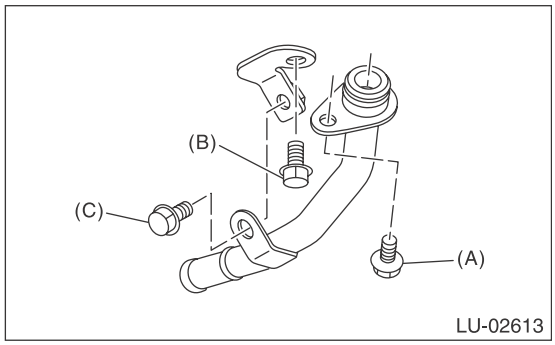

Tightening torque:
T1: 6.4 N·m (0.7 kgf-m, 4.7 ft-lb)
T2: 54 N·m (5.5 kgf-m, 39.8 ft-lb)

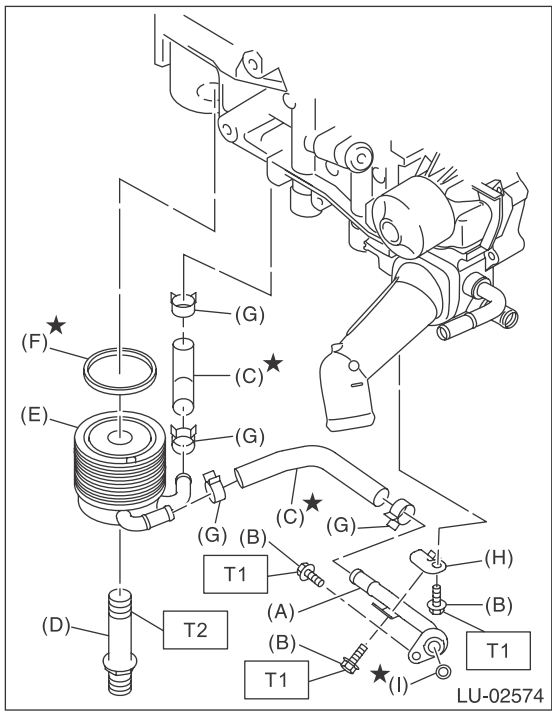

(A) Oil cooler pipe
(B) BOLT
(C) Oil cooler hose
(D) Oil cooler connector
(E) Oil cooler
(F) Gasket
(G) Clip
(H) Oil cooler pipe stay
(I) O-ring

C: INSPECTION

1) Check that the engine oil cooler, oil cooler pipe and oil cooler connector do not have deformation, cracks or damage.
2) Make sure the oil cooler hoses are not cracked, damaged or loose.
3) Check the coolant paths for clogs while spraying compressed air.
4) Make sure the mating surfaces of the cylinder block do not have damage.

8. Oil Catch Tank

A: REMOVAL

For removal procedures, refer to IN (H4DOTC) section. <Ref. to IN(H4DOTC)-23, REMOVAL, Oil Catch Tank.>

B: INSTALLATION

For installation procedures, refer to IN (H4DOTC) section. <Ref. to IN(H4DOTC)-23, INSTALLATION, Oil Catch Tank.>

C: INSPECTION

Refer to IN (H4DOTC) for inspection procedures. <Ref. to IN(H4DOTC)-23, INSPECTION, Oil Catch Tank.>

9. Scavenge Pump

A: REMOVAL

CAUTION:
If engine oil is spilt onto the exhaust pipe, wipe it off with cloth to avoid emission of smoke or causing a fire.

NOTE:
Turbo model is equipped with scavenge pump.
1) Lift up the vehicle.
2) Remove the under cover. <Ref. to EI-35, REMOVAL, Front Under Cover.>
3) Remove the union bolt (A) that holds the oil pipe (C) to the scavenge pump (E).
4) Remove the bolt (D) that holds the scavenge pump (E) to the cylinder head, and remove the scavenge pump using a flat tip screwdriver.

CAUTION:
Be careful not to damage the mating surface of the cylinder head and scavenge pump.

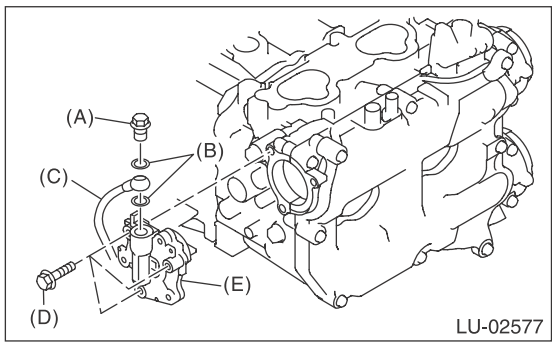

(A) Union bolt
(B) Gasket
(C) Oil pipe
(D) BOLT
(E) Scavenge pump

B: INSTALLATION

Install in the reverse order of removal.

CAUTION:
Do not start applying liquid gasket from (A) as shown in the following figure.

NOTE:
- Use a new gasket.
- Install within 5 min. after applying liquid gasket.

Liquid gasket:
THREE BOND 1217G (Part No. K0877Y0100) or equivalent

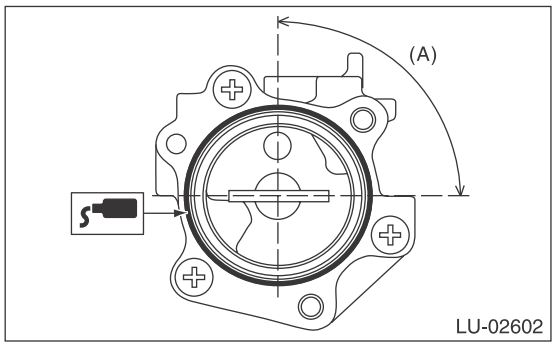

Tightening torque:
T1: 6.4 N·m (0.7 kgf-m, 4.7 ft-lb)
T2: 29 N·m (3.0 kgf-m, 21.4 ft-lb)

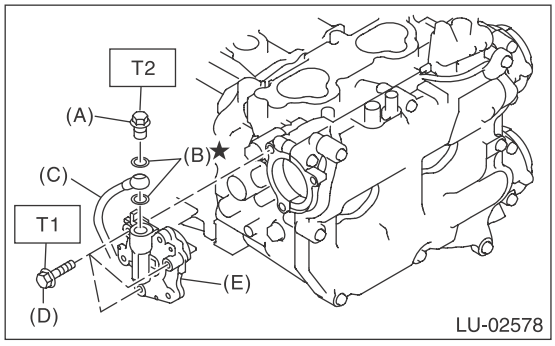

(A) Union bolt
(B) Gasket
(C) Oil pipe
(D) BOLT
(E) Scavenge pump

C: INSPECTION

1) Check that the scavenge pump and oil pipe have no deformation, cracks and other damages.
2) Check that the scavenge pump has no cracks, damage or loose part.

10.Oil Pipe

A: REMOVAL

NOTE:
Turbo model is equipped with oil pipe.
1) Remove the collector cover.
2) Disconnect the ground cable from battery.

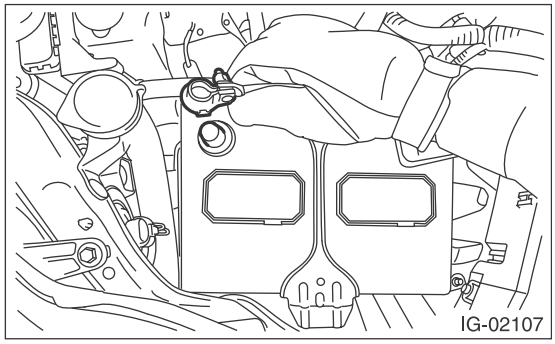

3) Remove the intercooler. <Ref. to IN(H4DOTC)-17, REMOVAL, Intercooler.>
4) Lift up the vehicle.
5) Remove the under cover. <Ref. to EI-35, REMOVAL, Front Under Cover.>
6) Remove the ground cable from the oil outlet pipe.
7) Disconnect the oil outlet hose from the oil outlet pipe.

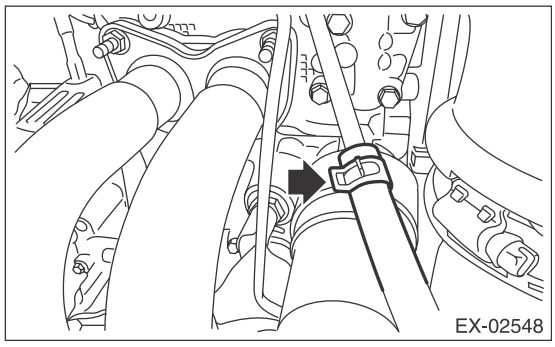

8) Remove oil inlet pipe B (B) from oil inlet pipe A (A), and remove the bolt which holds oil inlet pipe C (C) and oil inlet pipe A (A).

CAUTION:
In order to prevent damaging the oil inlet pipe, fix the section (a) shown in the figure when loosing the oil inlet pipe flare nut, and avoid the part from rotating together while loosening the nut.

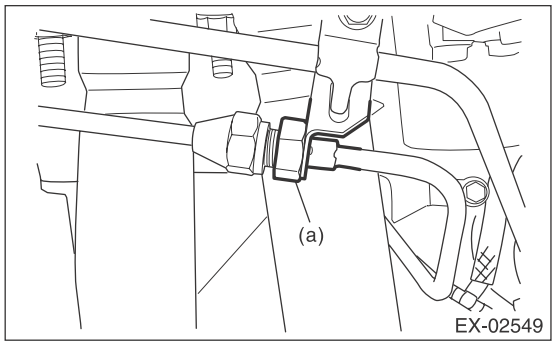

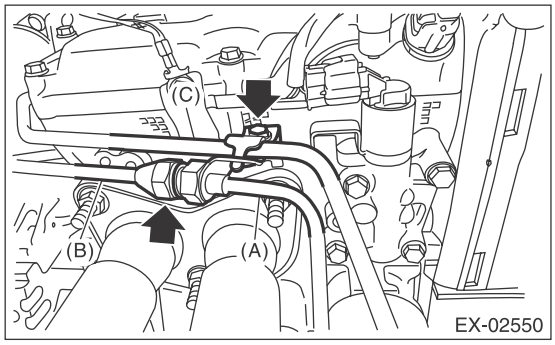

9) Lower the vehicle.
10) Remove the union bolt (B) which secures the oil outlet pipe (A) to the scavenge pump.
11) Remove the bolts (C) and (D) which secure the oil outlet pipe (A) to the cylinder head to remove the oil outlet pipe (A).

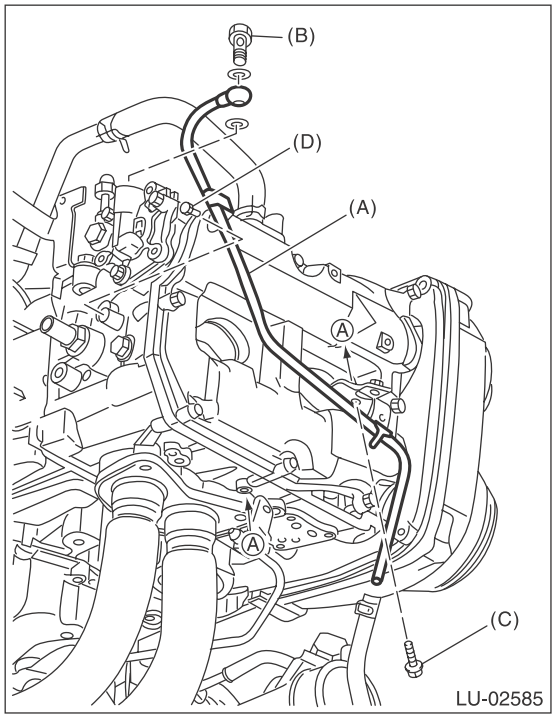

12) Remove the oil inlet pipe B (A) from the oil inlet pipe C (C).

CAUTION:
In order to prevent damaging the oil inlet pipe C (C), fix the section (a) shown in the figure when loosing the oil inlet pipe B (A) flare nut, and avoid the part from rotating together while loosening the nut.

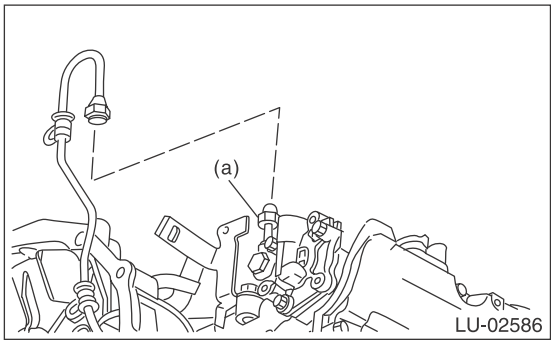

13) Remove the bolt (B) which secures the oil inlet pipe B (A) to the cylinder head and the stay to remove the oil inlet pipe B (A).
14) Remove the union bolt (D) which secures the oil inlet pipe C (C) to the cylinder head to remove the oil inlet pipe C (C).

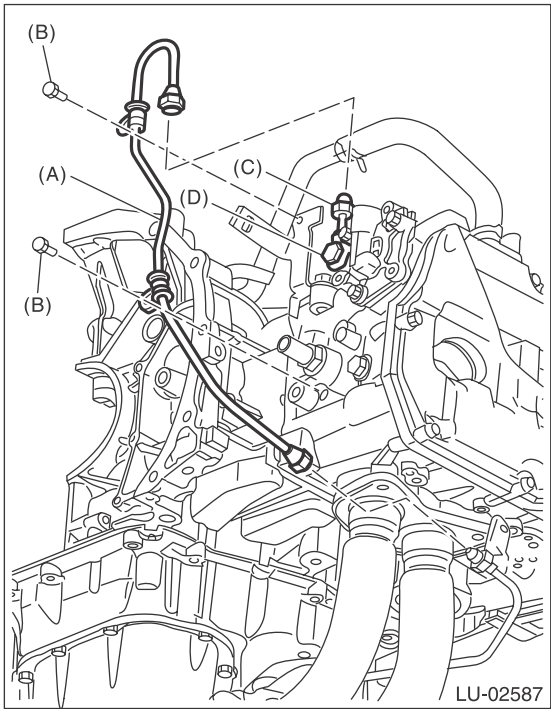

15) Remove the radiator main fan and radiator sub fan. <Ref. to CO(H4DOTC)-25, REMOVAL, Radiator Main Fan and Fan Motor.> <Ref. to CO(H4DOTC)-27, REMOVAL, Radiator Sub Fan and Fan Motor.>
16) Remove the V-belts. <Ref. to ME(H4DOTC)-42, REMOVAL, V-belt.>
17) Remove the crank pulley. <Ref. to ME(H4DOTC)-44, REMOVAL, Crank Pulley.>
18) Remove the timing belt cover. <Ref. to ME(H4DOTC)-46, REMOVAL, Timing Belt Cover.>
19) Remove the timing belt. <Ref. to ME(H4DOTC)-51, REMOVAL, Timing Belt.>
20) Remove the cam sprocket LH. <Ref. to ME(H4DOTC)-60, REMOVAL, Cam Sprocket.>
21) Remove the belt cover No. 2 LH.

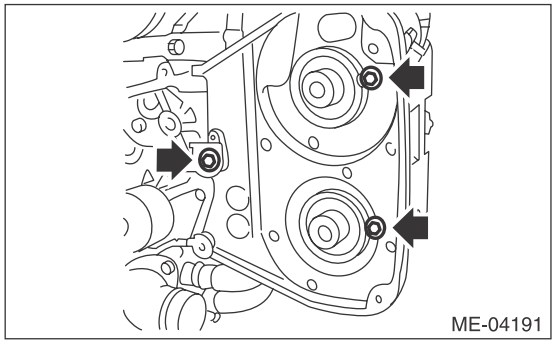

22) Remove the oil pipe.

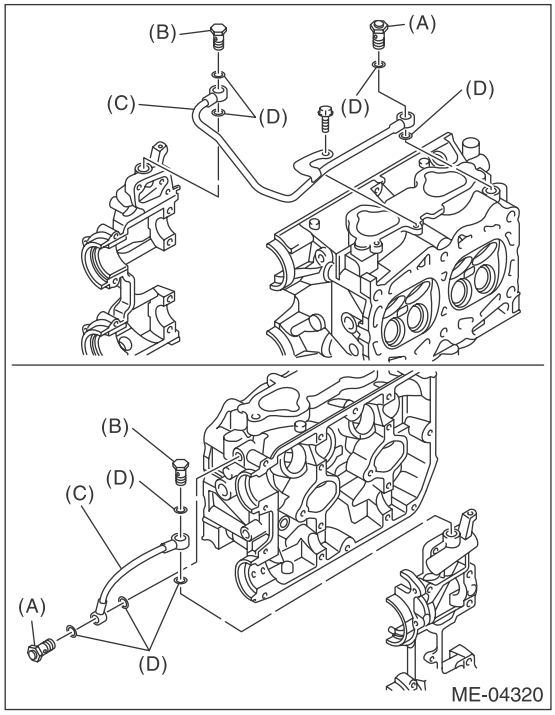

(A) Union bolt with filter (with protrusion)
(B) Union bolt without filter (without protrusion)
(C) Oil pipe
(D) Gasket

B: INSTALLATION

1) Inspect the union bolt with filter. <Ref. to LU(H4SO)-33, INSPECTION, Oil Pipe.>
2) Install the oil pipe.

NOTE:
• Be careful of the install location of the union bolt; the location will differ depending on the presence of filter.
• Use a new gasket.

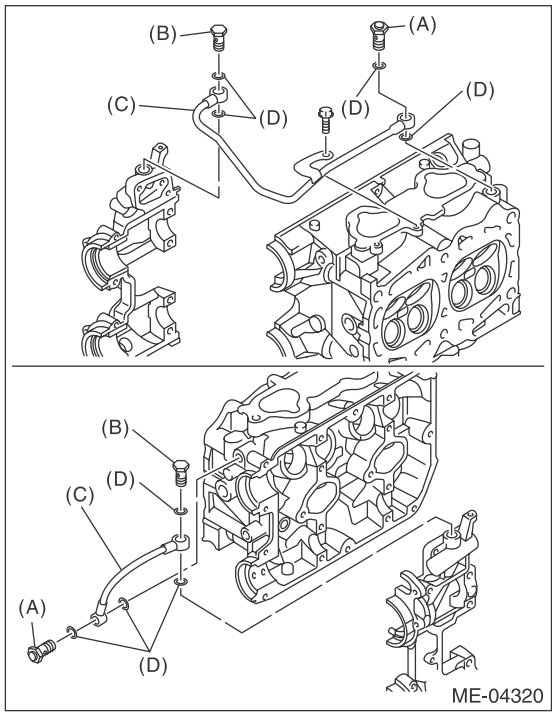

(A) Union bolt with filter (with protrusion)
(B) Union bolt without filter (without protrusion)
(C) Oil pipe
(D) Gasket

3) Install the belt cover No. 2 LH.

Tightening torque:
5 N·m (0.5 kgf-m, 3.7 ft-lb)

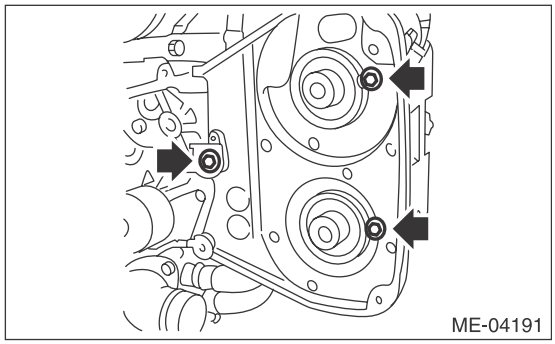

4) Install the cam sprocket LH. <Ref. to ME(H4DOTC)-60, INSTALLATION, Cam Sprocket.>
5) Install the timing belt. <Ref. to ME(H4DOTC)-54, TIMING BELT, INSTALLATION, Timing Belt.>
6) Install the timing belt cover. <Ref. to ME(H4DOTC)-49, INSTALLATION, Timing Belt Cover.>
7) Install the crank pulley. <Ref. to ME(H4DOTC)-44, INSTALLATION, Crank Pulley.>
8) Install the V-belts. <Ref. to ME(H4DOTC)-42, INSTALLATION, V-belt.>
9) Install the radiator main fan and the radiator sub fan. <Ref. to CO(H4DOTC)-25, INSTALLATION, Radiator Main Fan and Fan Motor.> <Ref. to CO(H4DOTC)-27, INSTALLATION, Radiator Sub Fan and Fan Motor.>
10) Install the intake manifold. <Ref. to FU(H4DOTC)-21, INSTALLATION, Intake Manifold.>
11) Install the intercooler. <Ref. to IN(H4DOTC)-18, INSTALLATION, Intercooler.>
12) Attach the oil inlet pipe C (C) to the cylinder head with union bolt (D).

NOTE:
Use a new gasket.

Tightening torque:
29 N·m (3.0 kgf-m, 21.4 ft-lb)

13) Temporarily tighten the oil inlet pipe B (A) to the oil inlet pipe C (C).
14) Secure the oil inlet pipe B (A) to the cylinder head with bolt (B).

Tightening torque:
6.4 N·m (0.7 kgf-m, 4.7 ft-lb)

15) Tighten the flare nut of the oil inlet pipe B (A).

CAUTION:
In order to prevent damaging the oil inlet pipe C, fix the section (a) shown in the figure when tightening the oil inlet pipe B flare nut, and avoid the part from rotating together while tightening the nut.

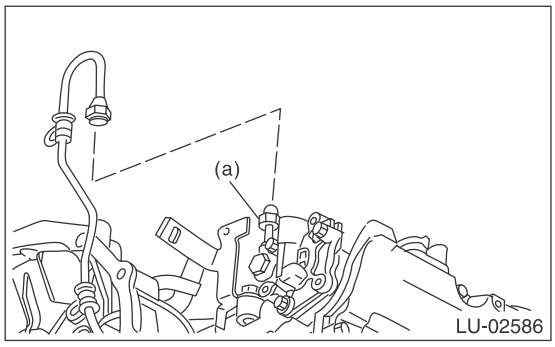

Tightening torque:
20 N·m (2.0 kgf-m, 14.8 ft-lb)

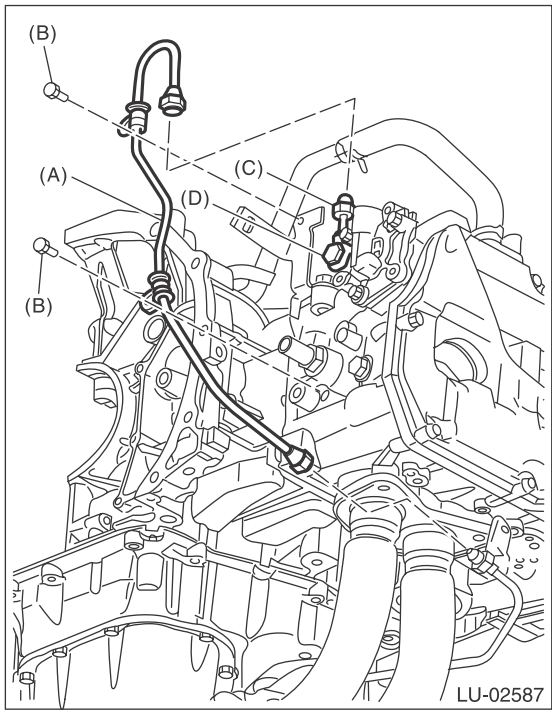

16) Temporarily tighten the oil outlet pipe (A) to the scavenge pump with union bolt (B).
17) Secure the oil outlet pipe (A) to the cylinder head and the stay with bolts (C) and (D).

Tightening torque:
6.4 N·m (0.7 kgf-m, 4.7 ft-lb)
18) Tighten the union bolt (B) of the oil outlet pipe (A).

Tightening torque:
29 N·m (3.0 kgf-m, 21.4 ft-lb)

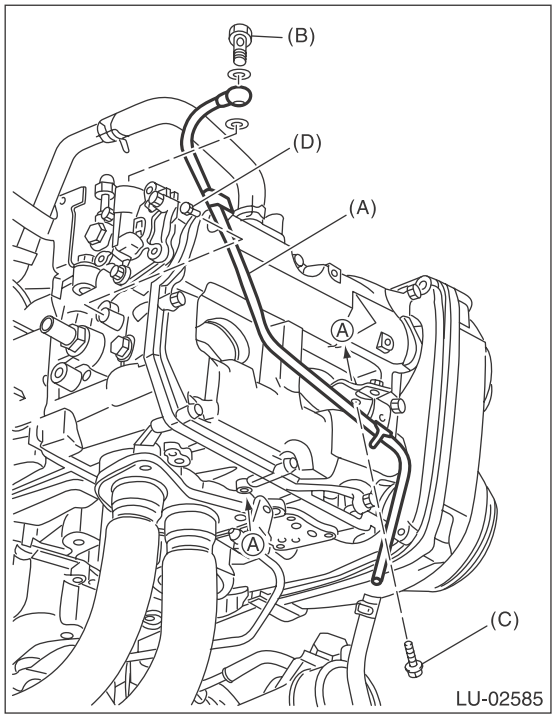

19) Lift up the vehicle.
20) Install the bolt which holds oil inlet pipe C (C) and oil inlet pipe A (A), and install oil inlet pipe B (B) to oil inlet pipe A (A).

CAUTION:
In order to prevent damaging the oil inlet pipe, fix the section (a) shown in the figure when tightening the oil inlet pipe flare nut, and avoid the part from rotating together while tightening the nut.

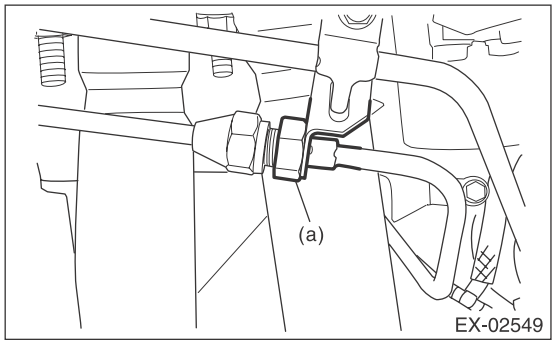

Tightening torque:
T1: 6.4 N·m (0.7 kgf-m, 4.7 ft-lb)
T2: 20 N·m (2.0 kgf-m, 14.8 ft-lb)

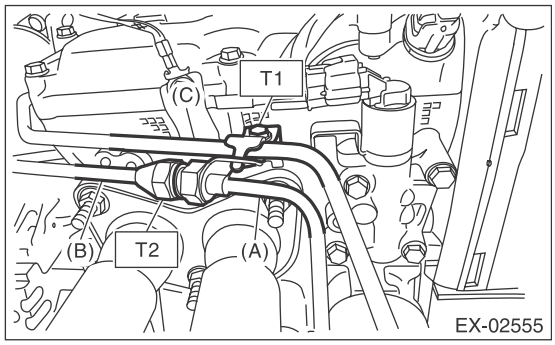

21) Attach the ground cable to the oil outlet pipe.

Tightening torque:
T1: 7.5 N·m (0.8 kgf-m, 5.5 ft-lb)

22) Connect the oil outlet hose to the oil outlet pipe.

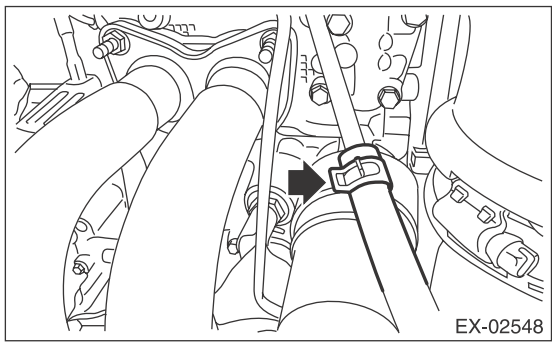

23) Install the under cover.
24) Lower the vehicle.
25) Connect the ground cable to battery.

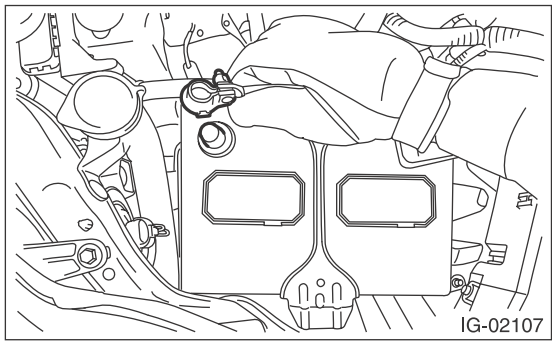

26) Install the collector cover.

C: INSPECTION

1. INSPECTING UNION BOLT WITH FILTER

Check the filter part of union bolt for clogging or damage, and if defective, replace the union bolt with filter with the new part.

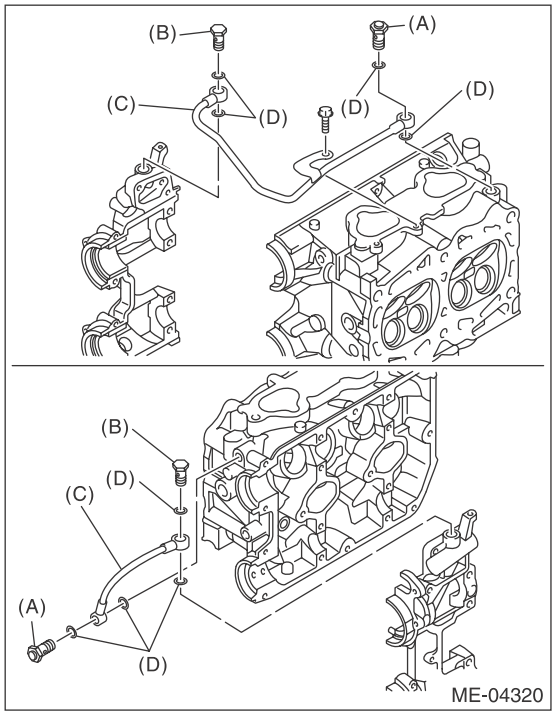

(A) Union bolt with filter (with protrusion)
(B) Union bolt without filter (without protrusion)
(C) Oil pipe
(D) Gasket

2. OTHER INSPECTIONS

1) Check that the oil pipe and union bolt have no deformation, cracks and other damages.
2) Check that there are no oil leaks or oil oozing from the oil pipe attachment section.

11.Engine Oil Filter

A: REMOVAL

CAUTION:
If the engine oil is spilt over exhaust pipe or the under cover, wipe it off with cloth to avoid emitting smoke or causing a fire.
1) Lift up the vehicle.
2) Remove the service hole cover of under cover.
• Medium under cover model

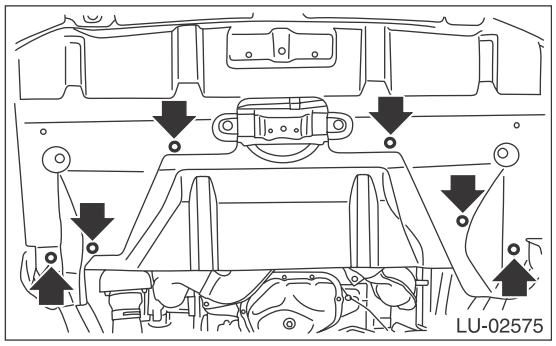

• Models with large under cover

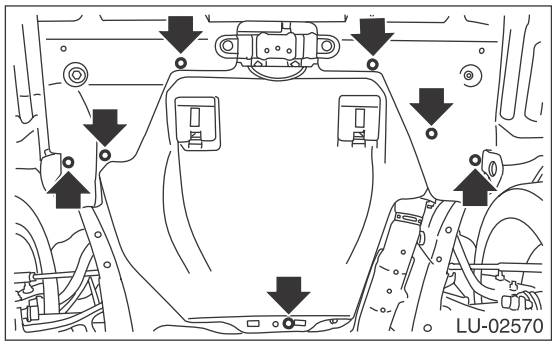

3) Remove the oil filter.
• Black oil filter
Remove it using the ST.
ST 18332AA000 OIL FILTER WRENCH (OUTER DIAMETER: 68 MM (2.68 IN) FOR OIL FILTER)
• Blue oil filter
Remove it using the general tool (65/67 mm 14 flutes).

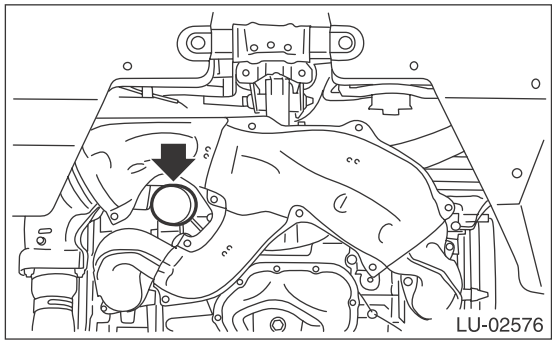

B: INSTALLATION

CAUTION:
Do not tighten excessively, or oil may leak.
1) Clean the oil filter installation surface on cylinder block or engine oil cooler.
2) Obtain a new oil filter and apply a thin coat of engine oil to the seal rubber.
3) Install the oil filter turning it by hand, being careful not to damage the seal rubber of the oil filter.
• Tighten the black oil filter (outer diameter of 68 mm (2.68 in)) by approx. 1 rotation after the seal rubber of the oil filter comes in contact with cylinder block. When using a torque wrench, tighten to 14 N·m (1.4 kgf-m, 10.3 ft-lb).
• Tighten the blue oil filter (outer diameter of 67.4 mm (2.65 in)) by approx. 7/8 rotation after the seal rubber of the oil filter comes in contact with cylinder block. When using a torque wrench, tighten to 12 N·m (1.2 kgf-m, 8.9 ft-lb).
4) Return the service hole cover to its original position. (turbo model)
5) Lower the vehicle.

C: INSPECTION

1) After installing the oil filter, run the engine and make sure that no oil is leaking around seal rubber.

NOTE:
The filter element and filter case are permanently jointed; therefore, interior cleaning is not necessary.
2) Check the engine oil level. <Ref. to LU(H4SO)-12, INSPECTION, Engine Oil.>

12.Oil Level Switch

A: REMOVAL

1) Disconnect the ground cable from battery.

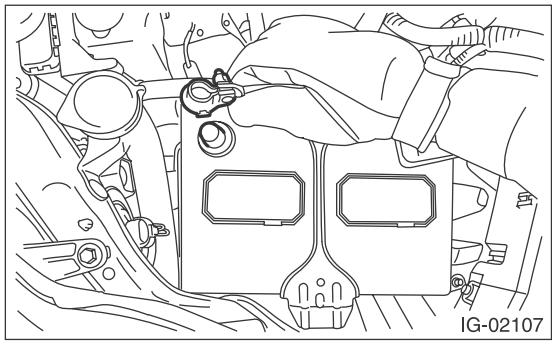

2) Lift up the vehicle.
3) Remove the under cover. <Ref. to EI-35, REMOVAL, Front Under Cover.>
4) Drain the engine oil. <Ref. to LU(H4SO)-12, REPLACEMENT, Engine Oil.>
5) Disconnect the connector of oil level switch from the engine harness.

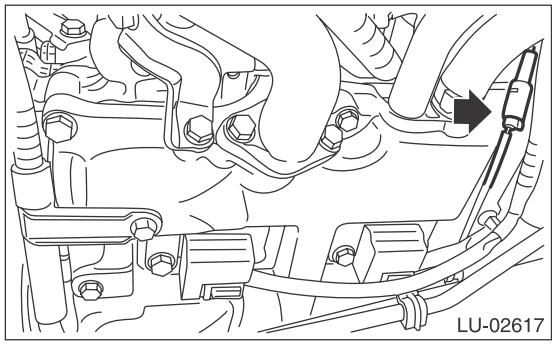

6) Remove the clip holding the oil level switch harness.

- Turbo model

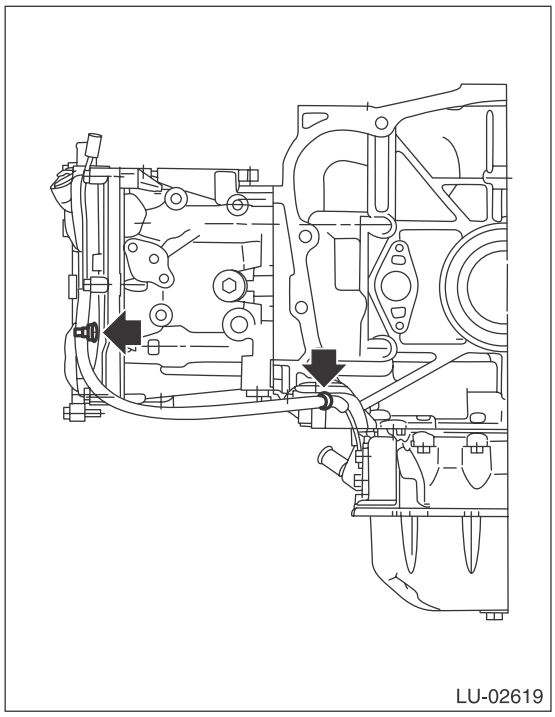

- 2.5 L non-turbo model

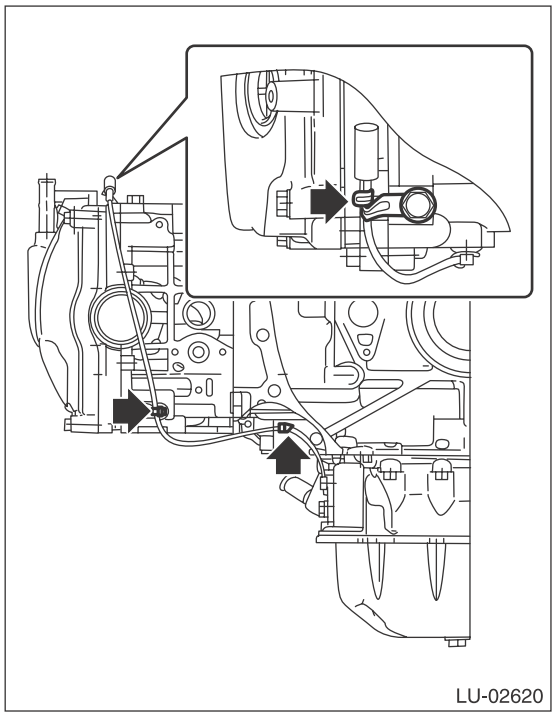

7) Remove the oil level switch from cylinder block lower.

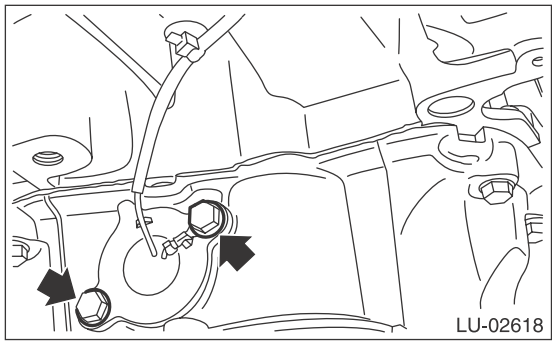

B: INSTALLATION

1) Install the oil level switch to cylinder block lower.

Tightening torque:
6.4 N·m (0.7 kgf-m, 4.7 ft-lb)

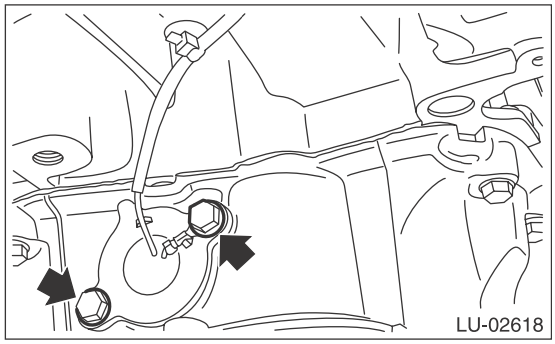

2) Hold the oil level switch harness with clip.

- Turbo model

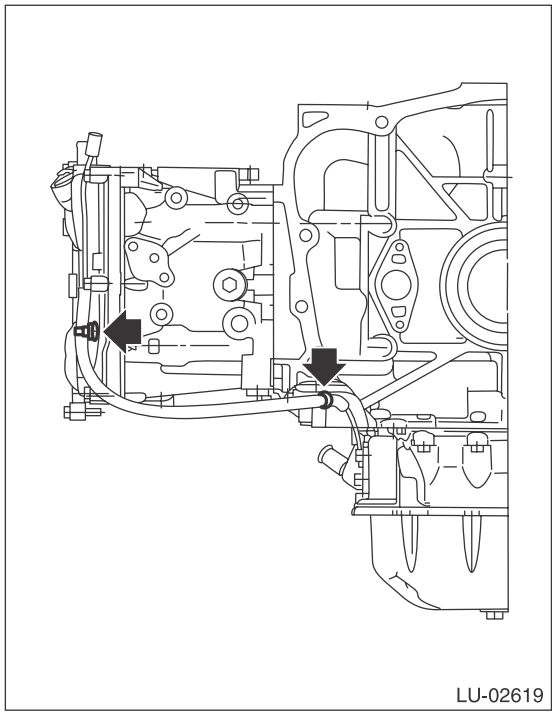

- 2.5 L non-turbo model

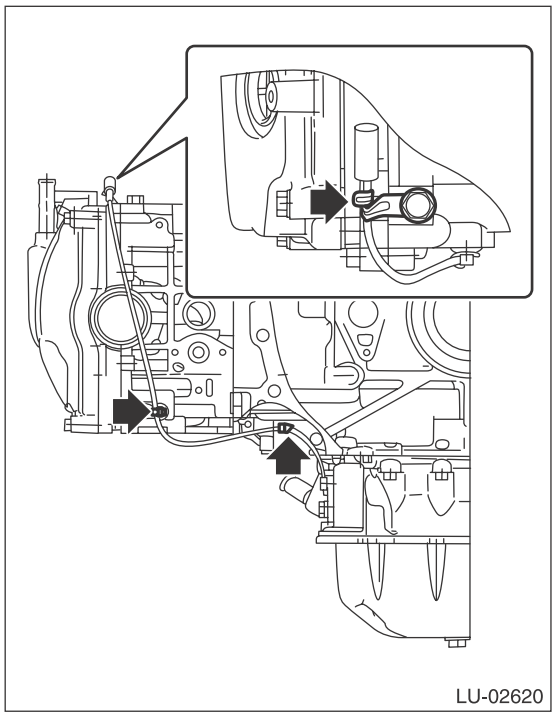

3) Connect the connector of oil level switch to the engine harness.

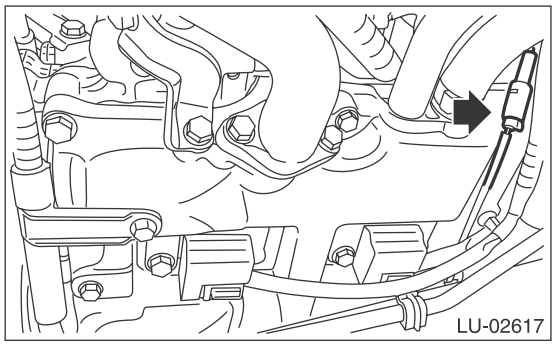

4) Install the under cover. <Ref. to EI-35, INSTALLATION, Front Under Cover.>
5) Lower the vehicle.
6) Refill the engine oil. <Ref. to LU(H4SO)-12, REPLACEMENT, Engine Oil.>
7) Check the engine oil level. <Ref. to LU(H4SO)-12, INSPECTION, Engine Oil.>
8) Connect the ground cable to battery.

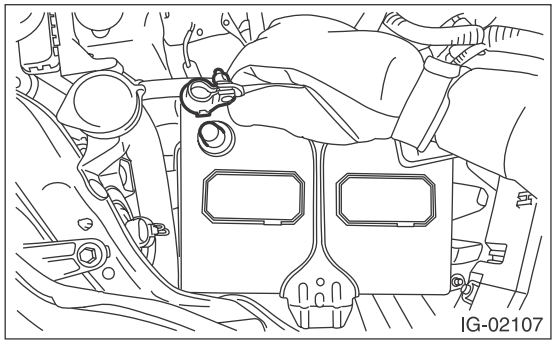

C: WIRING DIAGRAM

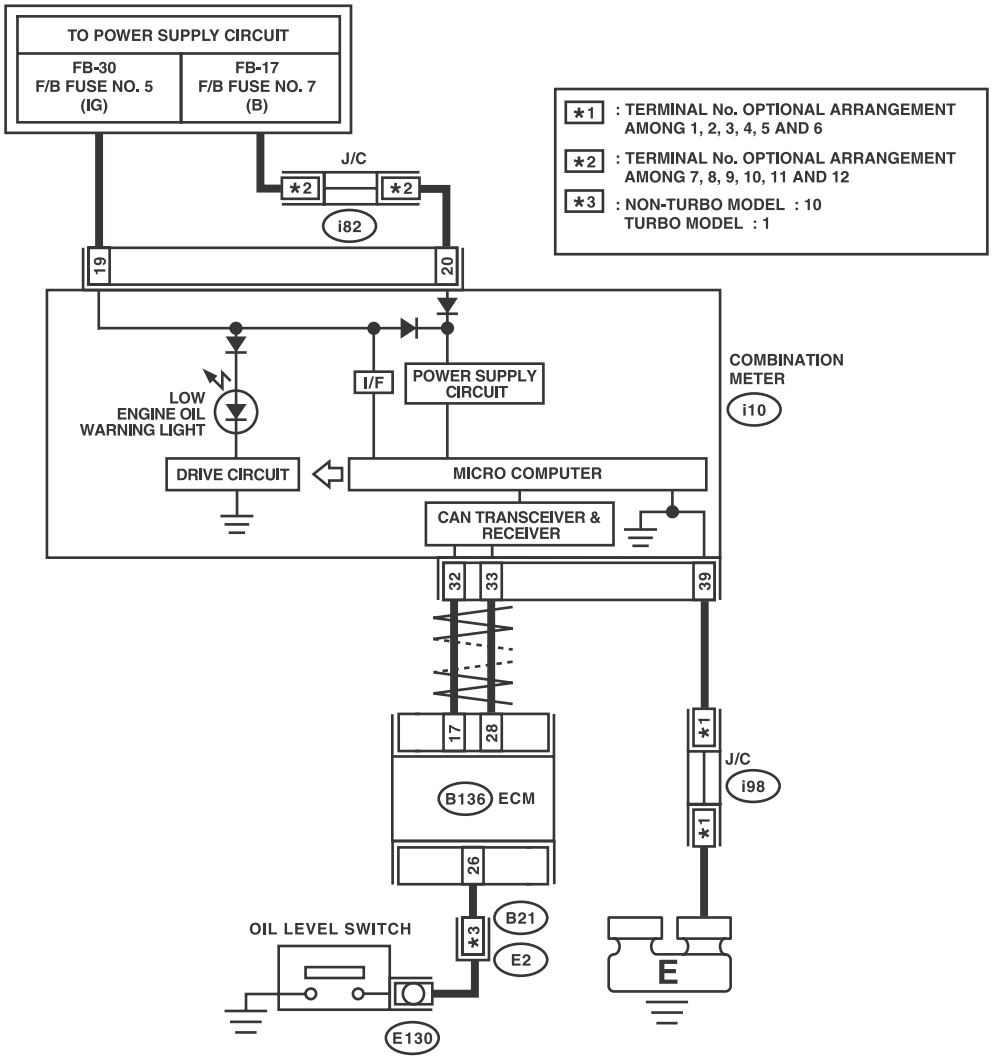

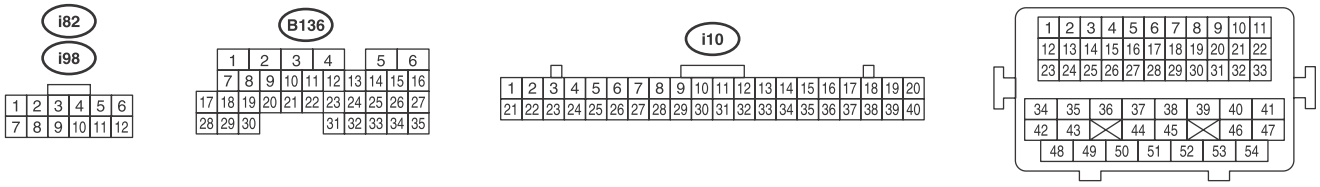

LU-02653

D: INSPECTION

1. INSPECTION WHILE OIL LEVEL SWITCH WARNING LIGHT IS ON

Step	Check	Yes	No
1 **CHECK ENGINE OIL LEVEL.**	Is engine oil level normal?	Go to step **2**.	Replace engine oil or refill, and check again while the oil level is normal condition. <Ref. to LU(H4SO)-12, REPLACEMENT, Engine Oil.> To turn off the oil level warning light, install the spare fuse at the delivery (test) mode fuse in the main fuse box. Then turn the ignition switch to ON (engine off) again, to confirm the warning light turns off. Remove the spare fuse installed to finish this step. NOTE: The engine oil level switch is normal, if the low engine oil level warning light turns off with the delivery (test) mode fuse installed.
2 **CHECK LAN SYSTEM.**	Has a DTC of the LAN system been input?	Perform the diagnosis according to DTC.	Go to step **3**.

	Step	Check	Yes	No
3	**CHECK OIL LEVEL SWITCH CIRCUIT.** 1) Turn the ignition switch to ON (engine OFF). 2) Read the current data for engine in the Subaru Select Monitor to confirm the item for "Oil level switch". <Ref. to EN(H4SO)(diag)-34, READ CURRENT DATA FOR ENGINE (NORMAL MODE), OPERATION, Subaru Select Monitor.> <Ref. to EN(H4DOTC)(diag)-37, READ CURRENT DATA FOR ENGINE (NORMAL MODE), OPERATION, Subaru Select Monitor.>	Is the "Oil level switch" signal displayed in Subaru Select Monitor HIGH?	To turn off the oil level warning light, install the spare fuse at the delivery (test) mode fuse in the main fuse box. Then turn the ignition switch to ON (engine off) again, to confirm the warning light turns off. Remove the spare fuse installed to finish this step. NOTE: The engine oil level switch is normal, if the low engine oil level warning light turns off with the delivery (test) mode fuse installed.	Go to step **4**.
4	**CHECK COMBINATION METER.** Perform the self-diagnosis of combination meter to check if there are any faults in the combination meter.<Ref. to IDI-6, OPERATION, Combination Meter System.>	Is the combination meter normal?	Go to step **5**.	Replace the combination meter. <Ref. to IDI-20, REMOVAL, Combination Meter.>
5	**CHECK SECURE CONNECTION OF CONNECTOR BETWEEN ENGINE HARNESS AND OIL LEVEL SWITCH.**	Is there any insecure connection?	Remedy the connection condition. Then, to turn off the oil level warning light, install the spare fuse at the delivery (test) mode fuse in the main fuse box. Then turn the ignition switch to ON (engine off) again, to confirm the warning light turns off. Remove the spare fuse installed to finish this step. NOTE: The engine oil level switch is normal, if the low engine oil level warning light turns off with the delivery (test) mode fuse installed.	Go to step **6**.

Step		Check	Yes	No
6	**CHECK OIL LEVEL SWITCH.** 1) Deliberately short circuits by connecting the engine harness connector terminal and chassis ground. 2) Turn the ignition switch to ON (engine OFF). 3) Read the current data for engine in the Subaru Select Monitor to confirm the item for "Oil level switch". <Ref. to EN(H4SO)(diag)-34, READ CURRENT DATA FOR ENGINE (NORMAL MODE), OPERATION, Subaru Select Monitor.> <Ref. to EN(H4DOTC)(diag)-37, READ CURRENT DATA FOR ENGINE (NORMAL MODE), OPERATION, Subaru Select Monitor.> ***Connector & terminal*** ***(E130) No. 1 — Chassis ground:***	Is the "Oil level switch" signal displayed in Subaru Select Monitor HIGH?	Replace the oil level switch. <Ref. to LU(H4SO)-35, REMOVAL, Oil Level Switch.>	Go to step **7**.
7	**CHECK SECURE CONNECTION OF CONNECTOR BETWEEN BULKHEAD HARNESS AND ENGINE HARNESS.**	Is there any insecure connection?	Remedy the connection condition. Then, to turn off the oil level warning light, install the spare fuse at the delivery (test) mode fuse in the main fuse box. Then turn the ignition switch to ON (engine off) again, to confirm the warning light turns off. Remove the spare fuse installed to finish this step. NOTE: The engine oil level switch is normal, if the low engine oil level warning light turns off with the delivery (test) mode fuse installed.	Go to step **8**.
8	**CHECK ENGINE HARNESS.** 1) Disconnect the oil level switch side connector of the engine harness. 2) Disconnect the bulkhead harness side connector of the engine harness. 3) Measure the resistance between connector terminals. ***Connector & terminal*** ***• Non-turbo model*** ***(E2) No. 10 — (E130) No. 1:*** ***• Turbo model*** ***(E2) No. 1 — (E130) No. 1:***	Is the resistance less than 1 Ω?	Go to step **9**.	Repair or replace the open circuit of engine harness.

	Step	Check	Yes	No
9	**CHECK SECURE CONNECTION OF CONNECTOR BETWEEN ENGINE CONTROL MODULE (ECM) AND BULKHEAD HARNESS.** Remove the glove box lid assembly. <Ref. to EI-65, REMOVAL, Glove Box.>	Is there any insecure connection?	Remedy the connection condition. Then, to turn off the oil level warning light, install the spare fuse at the delivery (test) mode fuse in the main fuse box. Then turn the ignition switch to ON (engine off) again, to confirm the warning light turns off. Remove the spare fuse installed to finish this step. NOTE: The engine oil level switch is normal, if the low engine oil level warning light turns off with the delivery (test) mode fuse installed.	Go to step **10**.
10	**CHECK BULKHEAD HARNESS.** 1) Remove the glove box lid assembly. <Ref. to EI-65, REMOVAL, Glove Box.> 2) Disconnect the engine control module (ECM) side connector of the bulkhead harness. 3) Disconnect the engine harness connectors of the bulkhead harness. 4) Measure the resistance between connector terminals. ***Connector & terminal*** ***• Non-turbo model*** ***(B136) No. 26 — (B21) No. 10:*** ***• Turbo model*** ***(B136) No. 26 — (B21) No. 1:***	Is the resistance less than 1 Ω?	Replace the Engine Control Module (ECM). <Ref. to FU(H4SO)-39, REMOVAL, Engine Control Module (ECM).> <Ref. to FU(H4DOTC)-57, REMOVAL, Engine Control Module (ECM).>	Repair or replace the open circuit of bulkhead harness.

2. OTHER INSPECTIONS

1) Check that the oil level switch does not have deformation, cracks, or damage.
2) Check the oil level switch installation part for oil leakage and oil seepage.

13.Engine Lubrication System Trouble in General

A: INSPECTION

Before performing diagnostics, make sure that the engine oil level is correct and no oil leakage exists.

Trouble	Possible cause	Corrective action
Warning light remains ON.	a. Oil pressure switch failure	
	❍ Cracked diaphragm or oil leakage within switch	Replace.
	❍ Broken spring or seized contacts	Replace.
	b. Low oil pressure	
	❍ Clogging of oil filter	Replace.
	❍ Malfunction of oil by-pass valve in oil filter	Replace.
	❍ Malfunction of oil relief valve in oil pump	Clean or replace.
	❍ Clogged oil passage	Clean.
	❍ Excessive tip clearance and side clearance of oil pump rotor	Replace.
	❍ Clogged oil strainer or broken pipe	Clean or replace.
	c. No oil pressure	
	❍ Insufficient engine oil (degradation, etc.)	Replace.
	❍ Broken pipe of oil strainer	Replace.
	❍ Stuck oil pump rotor	Replace.
Warning light does not illuminate.	a. Defective combination meter	Replace.
	b. Poor contact of switch contact points	Replace.
	c. Disconnection of wiring	Repair.
Warning light flickers momentarily.	a. Defective terminal contact	Repair.
	b. Defective wiring harness	Repair.
	c. Oil pressure switch failure	
	❍ Cracked diaphragm or oil leakage within switch	Replace.
	❍ Broken spring or seized contacts	Replace.
	d. Low oil pressure	
	❍ Clogging of oil filter	Replace.
	❍ Malfunction of oil by-pass valve in oil filter	Replace.
	❍ Malfunction of oil relief valve in oil pump	Clean or replace.
	❍ Clogged oil passage	Clean.
	❍ Excessive tip clearance and side clearance of oil pump rotor	Replace.
	❍ Clogged oil strainer or broken pipe	Clean or replace.

SPEED CONTROL SYSTEMS

SP(H4SO)

Page

1. General Description 2
2. Accelerator Pedal 4

1. General Description

A: SPECIFICATION

Accelerator pedal	Stroke	At pedal pad	54 — 59 mm (2.13 — 2.32 in)

B: COMPONENT

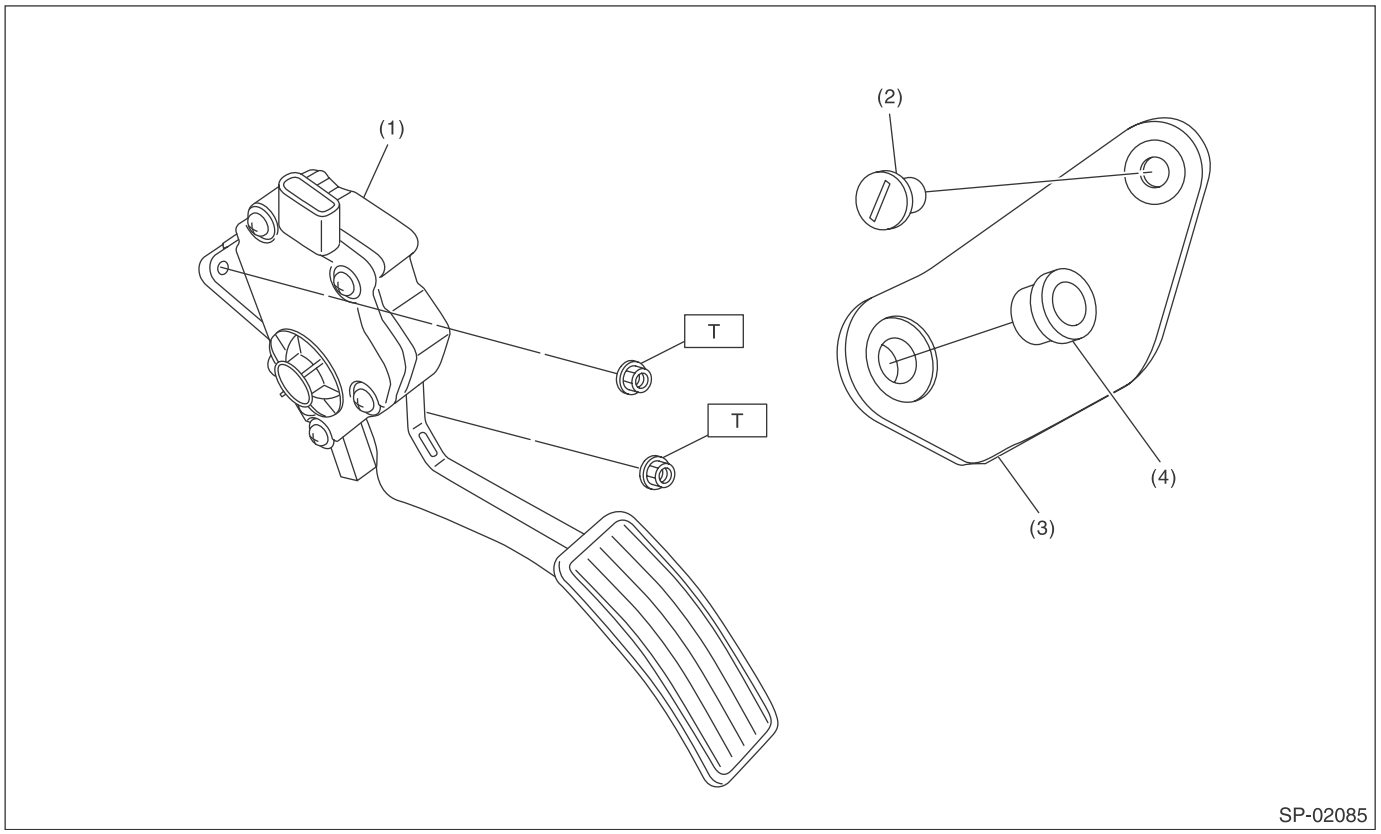

(1) Accelerator pedal ASSY
(2) Clip
(3) Accelerator plate
(4) Accelerator stopper

Tightening torque:N·m (kgf-m, ft-lb)
T: 18 (1.8, 13.3)

C: CAUTION

- Wear appropriate work clothing, including a cap, protective goggles and protective shoes when performing any work.
- Remove contamination including dirt and corrosion before removal or installation.
- Keep the parts in order and protect them from dust and dirt.
- Before removal or installation, be sure to clarify the failure. Avoid unnecessary removal, installation, disassembly and replacement.
- Vehicle components are extremely hot after driving. Be wary of receiving burns from heated parts.
- Be sure to tighten fasteners including bolts and nuts to the specified torque.
- Place shop jacks or rigid racks at the specified points.
- Before disconnecting connectors of sensors or units, be sure to disconnect the ground cable from the battery.

D: PREPARATION TOOL

1. SPECIAL TOOL

ILLUSTRATION	TOOL NUMBER	DESCRIPTION	REMARKS
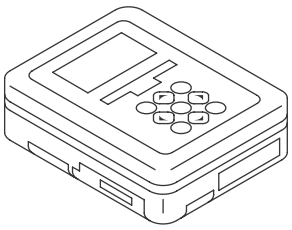 ST1B022XU0	1B022XU0	SUBARU SELECT MONITOR III KIT	Used for inspecting the accelerator pedal.

2. GENERAL TOOL

TOOL NAME	REMARKS
Circuit tester	Used for measuring voltage.

2. Accelerator Pedal

A: REMOVAL

1) Disconnect the ground cable from battery.

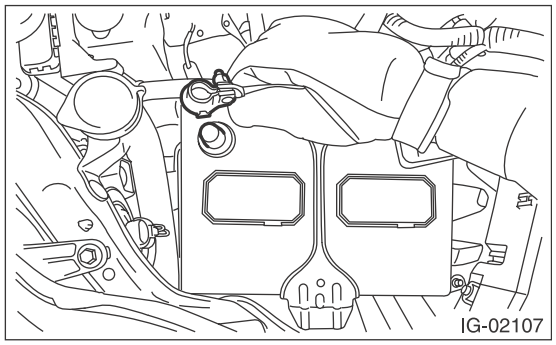

2) Disconnect the connector (A).
3) Remove the nut (B) securing accelerator pedal assembly and remove the accelerator pedal assembly.

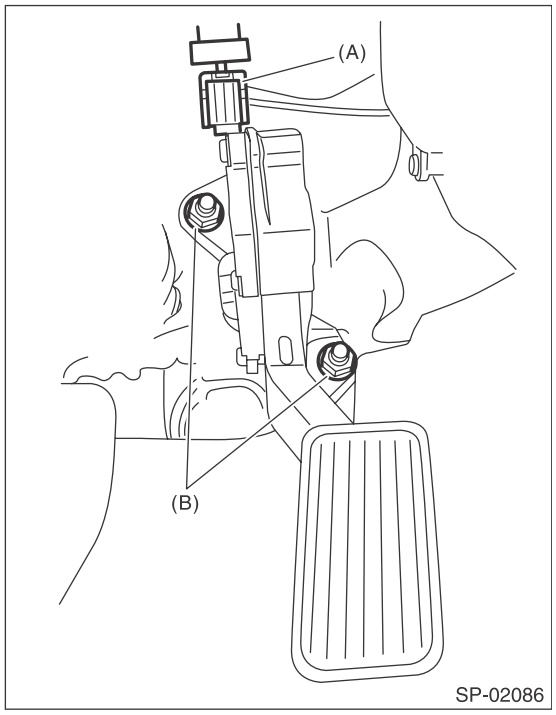

B: INSTALLATION

Install in the reverse order of removal.

Tightening torque:
18 N·m (1.8 kgf-m, 13.3 ft-lb)

C: DISASSEMBLY

NOTE:
The accelerator pedal cannot be disassembled.

D: INSPECTION

1. CHECK ACCELERATOR PEDAL SENSOR AREA (METHOD WITH CIRCUIT TESTER)

1) Remove the glove box lid assembly, glove box lower cover, instrument panel side cover RH and glove box back panel. <Ref. to EI-65, REMOVAL, Glove Box.>
2) Turn the ignition switch to ON. (engine OFF)
3) Check the voltage between ECM connector terminals.

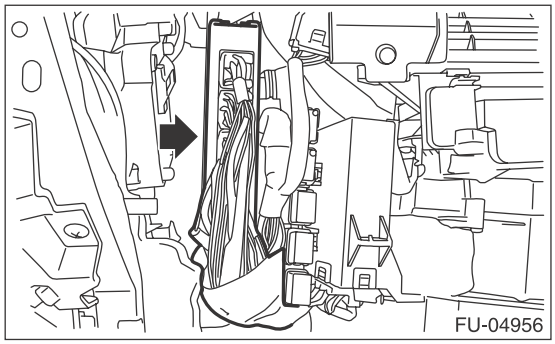

Main sensor side

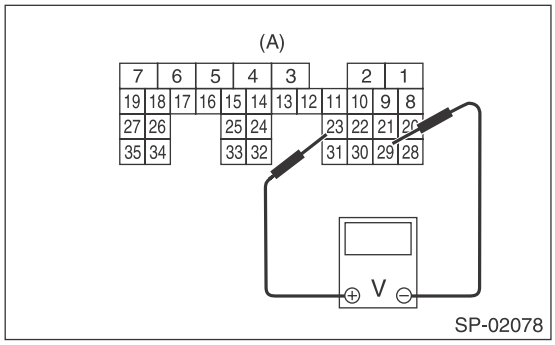

Sub sensor side

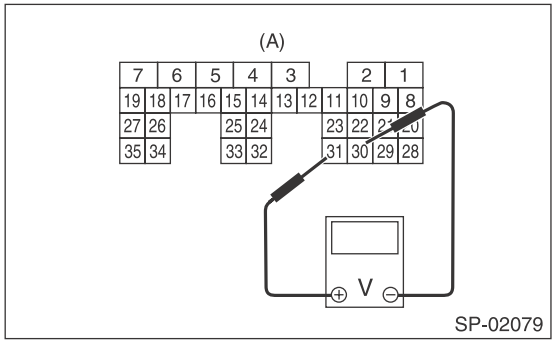

(A) To ECM connector

Accelerator pedal sensor	Accelerator pedal	Terminal No.	Standard
Main	Not depressed (Full closed)	23 (+) and 29 (–)	0.4 — 1.0 V
	Depressed (Full opened)		2.4 — 3.7 V
Sub	Not depressed (Full closed)	31 (+) and 30 (–)	0.3 — 1.1 V
	Depressed (Full opened)		2.3 — 3.8 V

4) After inspection, install the related parts in the reverse order of removal.

2. CHECK ACCELERATOR PEDAL SENSOR AREA (METHOD WITH SUBARU SELECT MONITOR)

1) Turn the ignition switch to ON. (engine OFF)
2) Read the accelerator pedal opening angle signal and voltage of accelerator pedal sensor using Subaru Select Monitor. <Ref. to EN(H4SO)(diag)-34, READ CURRENT DATA FOR ENGINE (NORMAL MODE), OPERATION, Subaru Select Monitor.> <Ref. to EN(H4DOTC)(diag)-37, READ CURRENT DATA FOR ENGINE (NORMAL MODE), OPERATION, Subaru Select Monitor.> <Ref. to EN(H6DO)(diag)-36, READ CURRENT DATA FOR ENGINE (NORMAL MODE), OPERATION, Subaru Select Monitor.>

Accelerator pedal sensor	Accelerator pedal opening angle signal	Standard
Main	0.0%	0.4 — 1.0 V
	100.0%	2.4 — 3.7 V
Sub	0.0%	0.3 — 1.1 V
	100.0%	2.3 — 3.8 V

3. OTHER INSPECTIONS

1) Check that the accelerator pedal does not have deformation, cracks or damage.
2) Check for smooth operation when the accelerator pedal is depressed.
3) Check if the accelerator pedal returns to its original position smoothly when the pedal is released.

IGNITION

IG(H4SO)

Page

1. General Description 2
2. Spark Plug 3
3. Ignition Coil 5

1. General Description

A: SPECIFICATION

Item				SPECIFICATION
Ignition coil and ignitor ASSY	Type			FK 0376
	Ignition system			Independent ignition coil
	Manufacturer			Diamond Electric
Spark plug	Manufacturer and type			NGK: SIFR6A11
	Thread size (diameter, pitch, length)		mm	14,1.25,19
	Spark plug gap	mm (in)	Standard	1.0 — 1.1 (0.039 — 0.043)
	Electrode			Iridium

B: COMPONENT

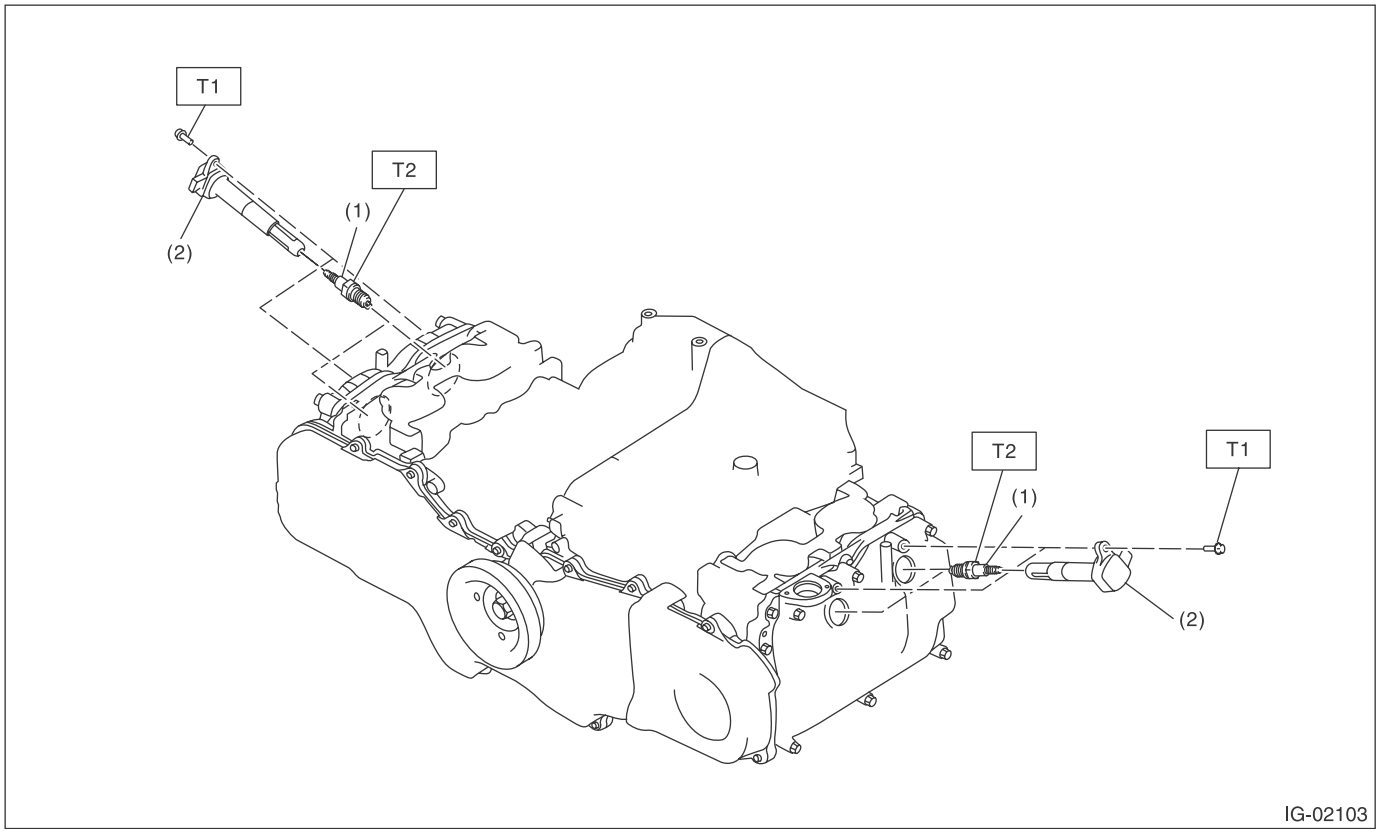

(1) Spark plug
(2) Ignition coil

Tightening torque:N·m (kgf-m, ft-lb)
T1: 9 (0.9, 6.6)
T2: 21 (2.1, 15.5)

C: CAUTION

- Wear appropriate work clothing, including a cap, protective goggles and protective shoes when performing any work.
- Remove contamination including dirt and corrosion before removal, installation or disassembly.
- Keep the disassembled parts in order and protect them from dust and dirt.
- Before removal, installation or disassembly, be sure to clarify the failure. Avoid unnecessary removal, installation, disassembly and replacement.
- Vehicle components are extremely hot after driving. Be wary of receiving burns from heated parts.
- Be sure to tighten fasteners including bolts and nuts to the specified torque.
- Place shop jacks or rigid racks at the specified points.
- Before disconnecting connectors of sensors or units, be sure to disconnect the ground cable from the battery.

2. Spark Plug

A: REMOVAL

Spark plug:
Refer to "SPECIFICATION" for the spark plug. <Ref. to IG(H4SO)-2, SPECIFICATION, General Description.>

1. RH SIDE

1) Disconnect the ground cable from battery.

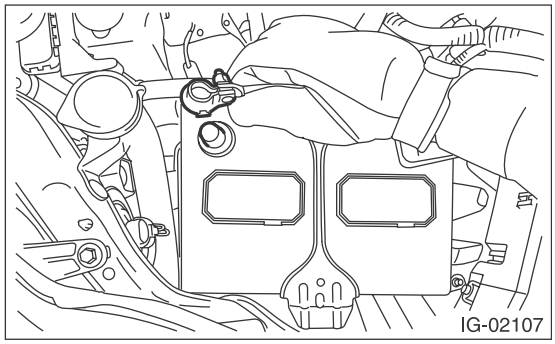

2) Remove the air cleaner case. <Ref. to IN(H4SO)-6, REMOVAL, Air Cleaner Case.>
3) Disconnect the connector (A) from ignition coil.
4) Remove the bolt (B), and remove the ignition coil.

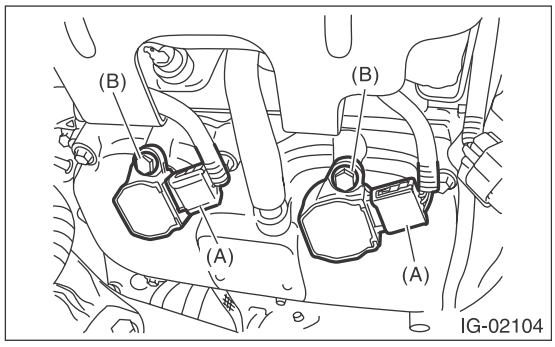

5) Remove the spark plug with a spark plug socket.

2. LH SIDE

1) Disconnect the ground cable from battery.

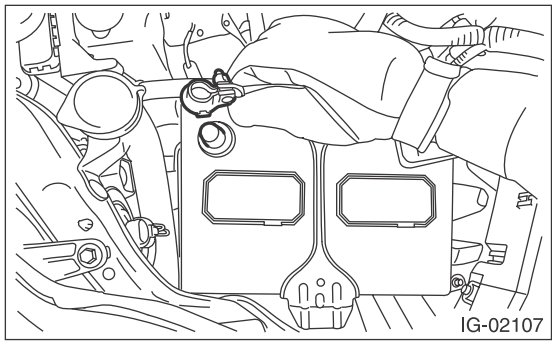

2) Disconnect the connector (A) from ignition coil.
3) Remove the bolt (B), and remove the ignition coil.

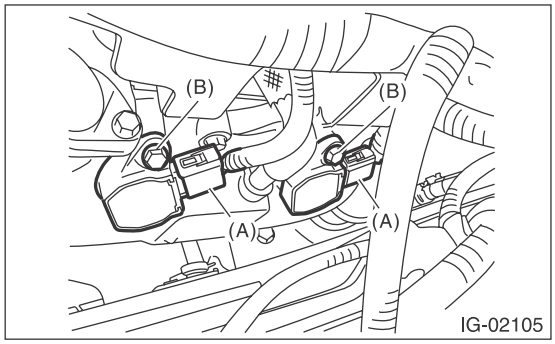

4) Remove the spark plug with a spark plug socket.

B: INSTALLATION

1. RH SIDE

Install in the reverse order of removal.

Tightening torque (Spark plug):
21 N·m (2.1 kgf-m, 15.5 ft-lb)

Tightening torque (Ignition coil):
9 N·m (0.9 kgf-m, 6.6 ft-lb)

2. LH SIDE

Install in the reverse order of removal.

Tightening torque (Spark plug):
21 N·m (2.1 kgf-m, 15.5 ft-lb)

Tightening torque (Ignition coil):
9 N·m (0.9 kgf-m, 6.6 ft-lb)

C: INSPECTION

1) Check the spark plug for abnormalities. If defective, replace the spark plug.

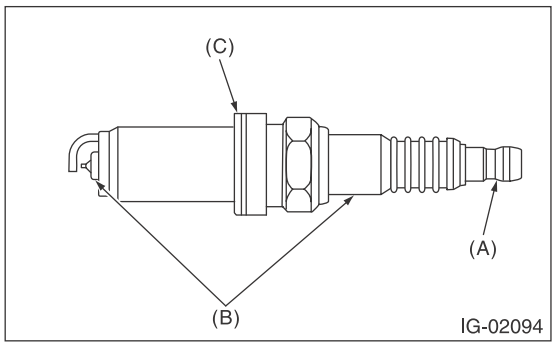

(A) Terminal damage
(B) Crack or damage in insulator
(C) Damaged gasket

2) Check the spark plug electrode and condition of the insulator. If abnormal, check and repair the cause and replace the spark plug.

(1) Normal:
Brown to grayish-tan deposits and slight electrode wear indicate correct spark plug heat range.

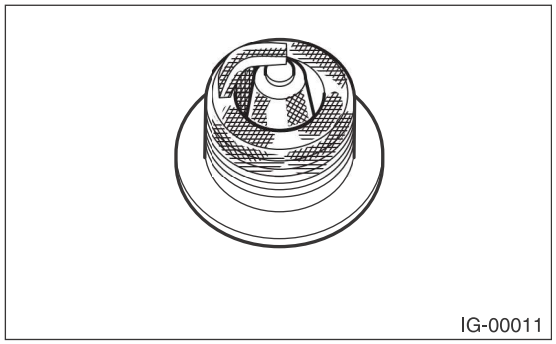
IG-00011

(2) Carbon fouled:
Dry fluffy carbon deposits on insulator and electrode are mostly caused by slow speed driving in the city, weak ignition, too rich fuel mixture, etc.

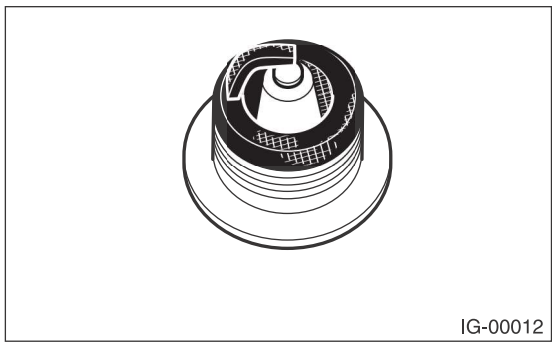
IG-00012

(3) Oil fouled:
Wet black deposits show oil entrance into combustion chamber through worn piston rings or increased clearance between valve guides and valve stems.

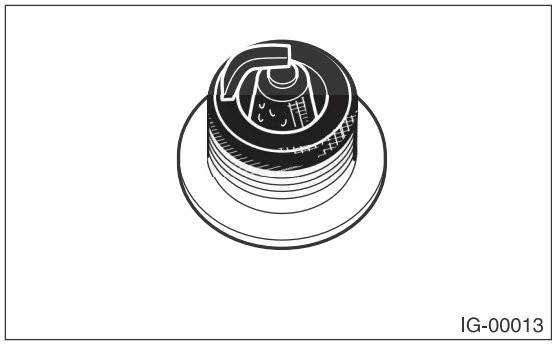
IG-00013

(4) Overheating:
White or light gray insulator with black or brown spots and bluish burnt electrodes indicate engine overheating, wrong selection of fuel, or loose spark plugs.

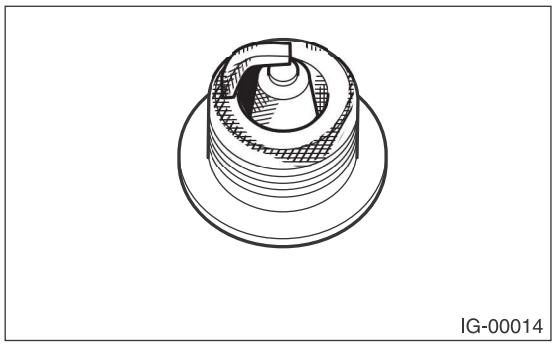
IG-00014

3) Using a nylon brush, etc., clean and remove the carbon or oxide deposits from the spark plug. If deposits are too stubborn, replace the spark plugs. After cleaning the spark plugs, check the spark plug gap "L" using a gap gauge. If it is not within the standard, replace the spark plug.

NOTE:
- Never use a plug cleaner.
- Do not use a metal brush as it may damage the electrode area.

Spark plug gap L:
Standard
1.0 — 1.1 mm (0.039 — 0.043 in)

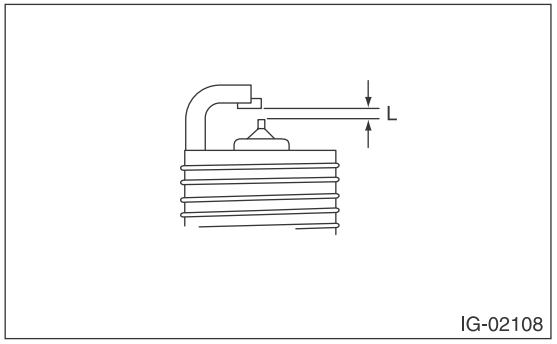

IG-02108

3. Ignition Coil

A: REMOVAL

Direct ignition type is adopted. Refer to “Spark Plug” for removal procedure. <Ref. to IG(H4SO)-3, REMOVAL, Spark Plug.>

B: INSTALLATION

Install in the reverse order of removal.

Tightening torque:
9 N·m (0.9 kgf-m, 6.6 ft-lb)

C: INSPECTION

For inspection procedure, refer to “Diagnostics for Engine Starting Failure”. <Ref. to EN(H4SO)(diag)-73, IGNITION CONTROL SYSTEM, Diagnostics for Engine Starting Failure.>

STARTING/CHARGING SYSTEMS

SC(H4SO)

Page

1. General Description 2
2. Starter 9
3. Generator 18
4. Battery 26

1. General Description

A: SPECIFICATION

1. 2.5 L MODEL

Item			SPECIFICATION	
Vehicle model			AT and CVT	MT
Starter	Type		Reduction type	
	Model		428000-4790	428000-4780
	Manufacturer		DENSO	
	Voltage and output		12 V — 1.4 kW	
	Direction of rotation		Counterclockwise (when observed from pinion)	
	Number of pinion teeth		9	
	No-load characteristics	Voltage	11 V	
		Current	90 A or less	
		Rotating speed	1,900 rpm or more	
	Load characteristics	Voltage	8 V	
		Current	370 A	
		Torque	11.1 N·m (1.1 kgf-m, 8.2 ft-lb) or more	
		Rotating speed	910 rpm or more	
	Lock characteristics	Voltage	3 V	
		Current	750 A or less	
		Torque	15.5 N·m (1.6 kgf-m, 11.4 ft-lb) or more	
Generator	Type		Rotating-field three-phase type, voltage regulator built-in type, with load response control system	
	Model		A3TG6191	
	Manufacturer		Mitsubishi Electric	
	Voltage and output		12 V — 110 A	
	Polarity on ground side		Negative	
	Direction of rotation		Clockwise (when observed from pulley side)	
	Armature connection		3-phase Y-type	
	Output current		1,500 rpm — 50 A or more 2,500 rpm — 91 A or more 5,000 rpm — 105 A or more	
	Regulated voltage		14.1 — 14.8 V [20°C (68°F)]	
	Outer diameter of rotor slip ring	Standard	22.7 mm (0.894 in)	
		Service limit	22.1 mm (0.870 in)	
	Brush length	Standard	18.5 mm (0.728 in)	
		Service limit	5.0 mm (0.197 in)	
Battery	Type and capacity		12 V — 52 AH (75D 23R)	

2. 3.6 L MODEL

Item			SPECIFICATION
Vehicle model			AT
Starter	Type		Reduction type
	Model		428000-5250
	Manufacturer		DENSO
	Voltage and output		12 V — 1.6 kW
	Direction of rotation		Counterclockwise (when observed from pinion)
	Number of pinion teeth		9
	No-load characteristics	Voltage	11 V
		Current	90 A or less
		Rotating speed	1,550 rpm or more
	Load characteristics	Voltage	8 V
		Current	370 A
		Torque	12.8 N·m (1.3 kgf-m, 9.4 ft-lb) or more
		Rotating speed	800 rpm or more
	Lock characteristics	Voltage	3 V
		Current	750 A or less
		Torque	19.0 N·m (1.9 kgf-m, 14.0 ft-lb) or more
Generator	Type		Rotating-field three-phase type, voltage regulator built-in type, with load response control system
	Model		A3TJ3591
	Manufacturer		Mitsubishi Electric
	Voltage and output		12 V — 130 A
	Polarity on ground side		Negative
	Direction of rotation		Clockwise (when observed from pulley side)
	Armature connection		3-phase △ type
	Output current		1,500 rpm — 55 A or more 2,500 rpm — 108 A or more 5,000 rpm — 127 A or more
	Regulated voltage		14.1 — 14.8 V [20°C (68°F)]
	Outer diameter of rotor slip ring	Standard	22.7 mm (0.894 in)
		Service limit	22.1 mm (0.870 in)
	Brush length	Standard	18.5 mm (0.728 in)
		Service limit	5.0 mm (0.197 in)
Battery	Type and capacity		12 V — 52 AH (75D 23R)

B: COMPONENT

1. STARTER

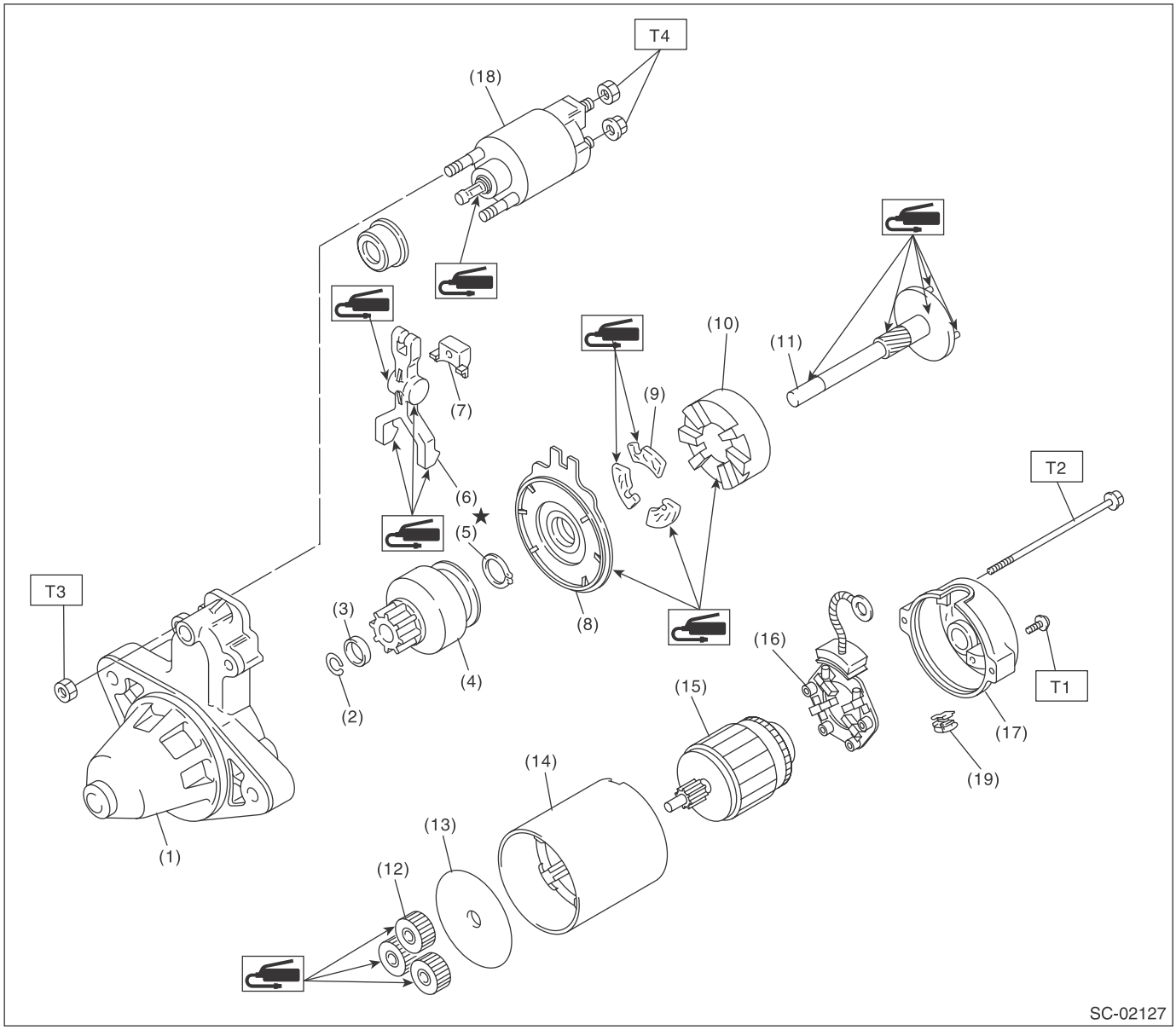

(1) Starter housing
(2) Snap ring
(3) Stopper
(4) Overrunning clutch
(5) Snap ring
(6) Shift lever
(7) Starter seal
(8) Shock absorber bearing
(9) Shock absorber
(10) Internal gear
(11) Shaft
(12) Planetary gear
(13) Starter plate
(14) Yoke
(15) Armature
(16) Brush holder ASSY
(17) Starter cover
(18) Magnet switch ASSY
(19) Drain duct

Tightening torque:N·m (kgf-m, ft-lb)
T1: 1.4 (0.1, 1.0)
T2: 6 (0.6, 4.4)
T3: 7.5 (0.8, 5.5)
T4: 10 (1.0, 7.4)

2. GENERATOR

- 2.5 L model

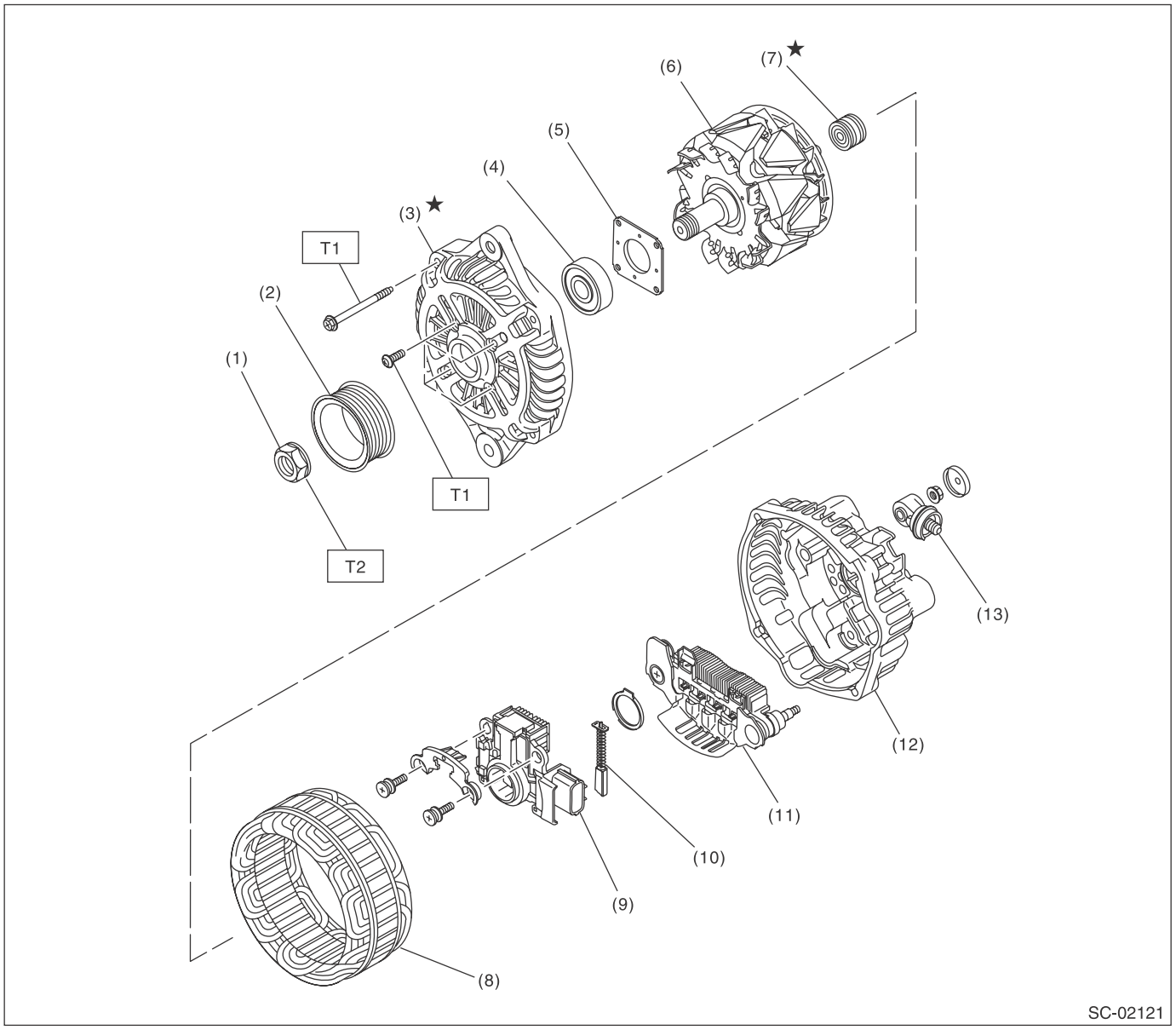

(1) Pulley nut
(2) Pulley
(3) Front cover
(4) Ball bearing
(5) Bearing retainer
(6) Rotor
(7) Bearing
(8) STATOR COIL
(9) IC regulator with brush
(10) Brush
(11) Rectifier
(12) Rear cover
(13) Terminals

Tightening torque:N·m (kgf-m, ft-lb)	
T1:	*4.7 (0.5, 3.5)*
T2:	*108 (11.0, 79.8)*

- 3.6 L model

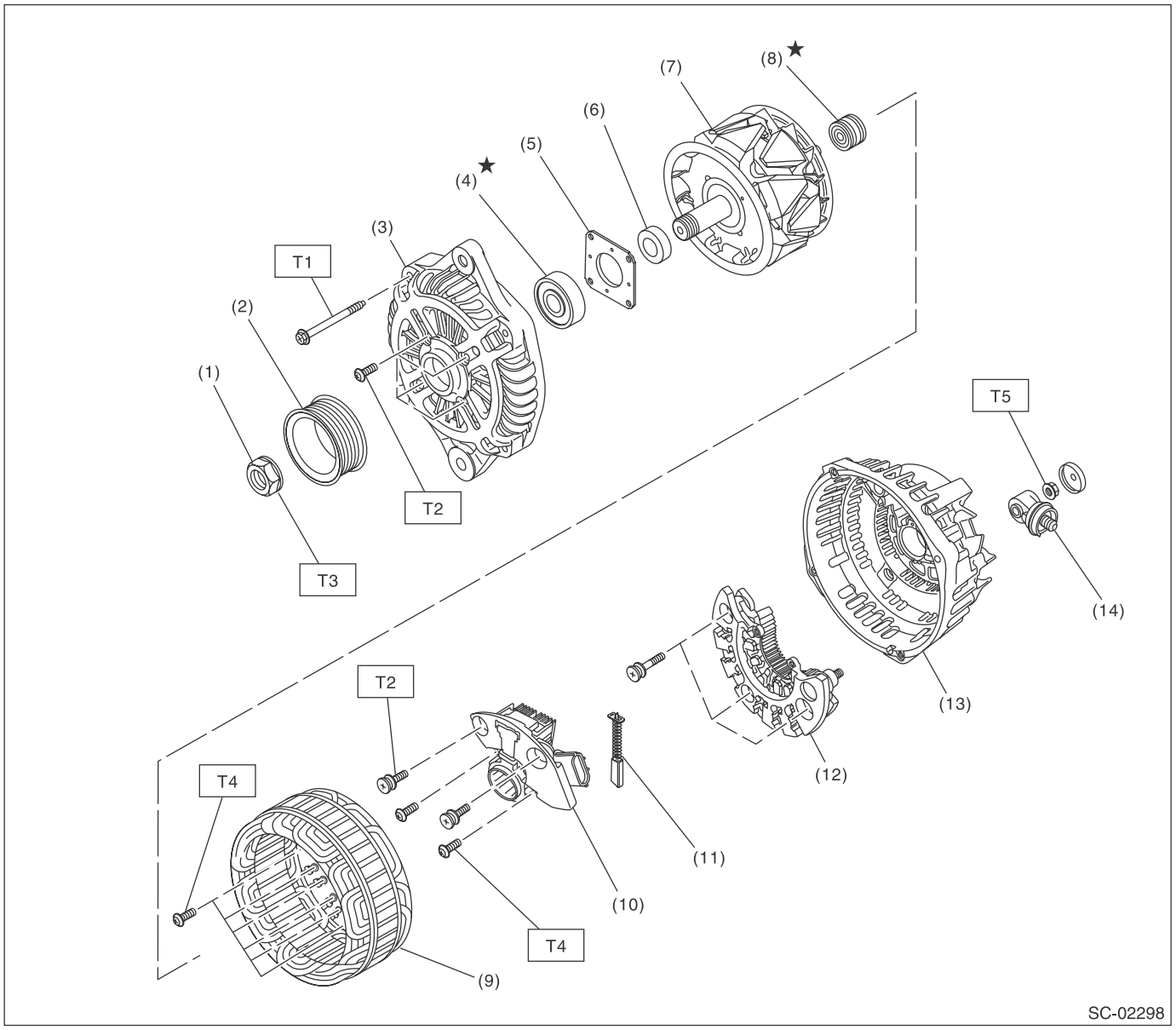

(1)	Pulley nut	(8)	Bearing
(2)	Pulley	(9)	STATOR COIL
(3)	Front cover	(10)	IC regulator
(4)	Ball bearing	(11)	Brush
(5)	Bearing retainer	(12)	Rectifier
(6)	SPACER	(13)	Rear cover
(7)	Rotor	(14)	Terminal B

Tightening torque:N·m (kgf-m, ft-lb)	
T1:	*4.4 (0.4, 3.2)*
T2:	*3.9 (0.4, 2.9)*
T3:	*117.5 (12.0, 86.7)*
T4:	*2 (0.2, 1.5)*
T5:	*8.9 (0.9, 6.6)*

3. GENERATOR BRACKET

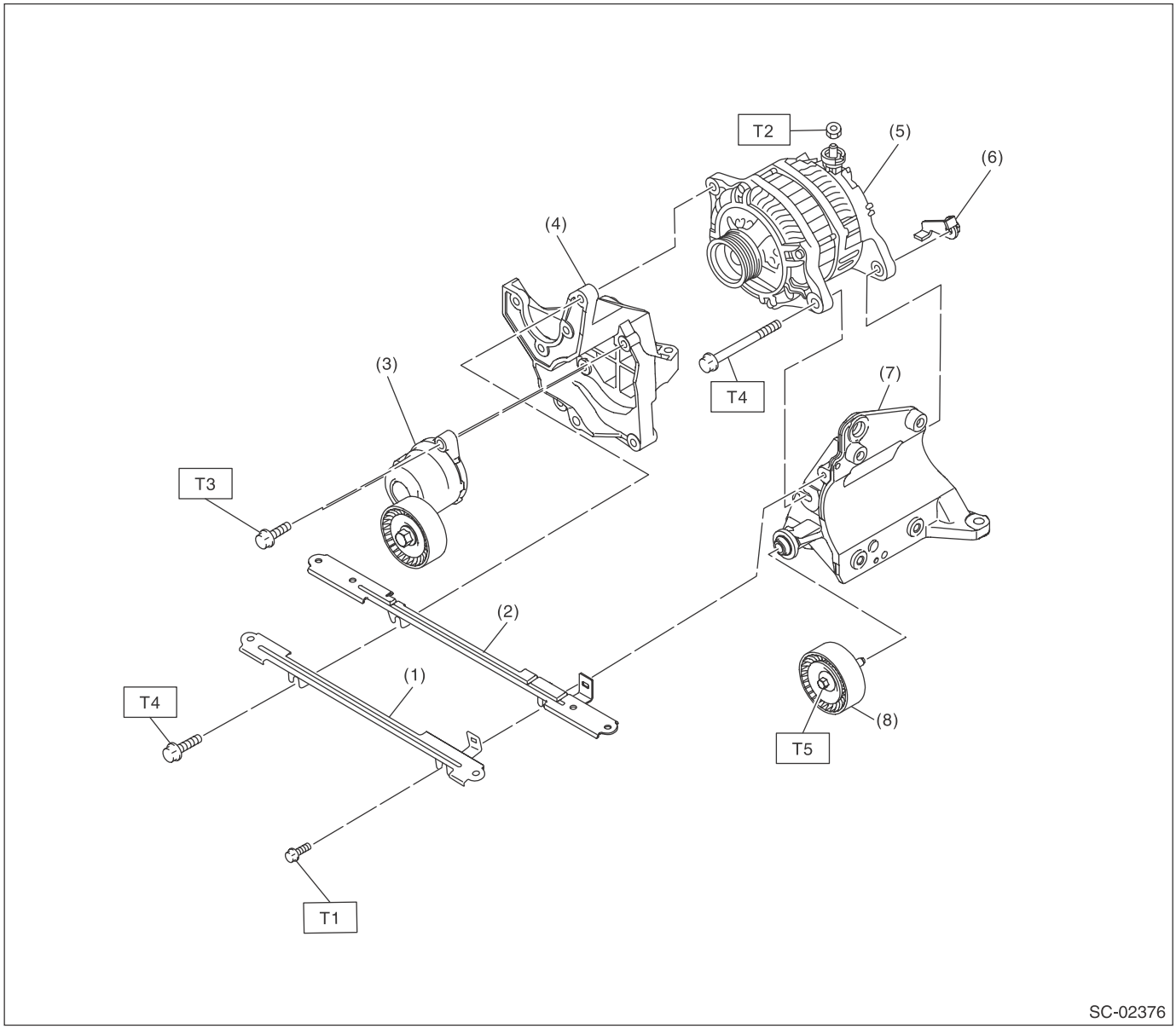

(1)	V-belt cover bracket	(5)	Generator
(2)	Collector cover bracket	(6)	Generator plate
(3)	V-belt tensioner ASSY	(7)	A/C compressor bracket
(4)	Power steering pump bracket	(8)	Idler pulley

Tightening torque:N·m (kgf-m, ft-lb)
T1: 6.4 (0.7, 4.7)
T2: 16 (1.6, 11.8)
T3: 20 (2.0, 14.8)
T4: 25 (2.5, 18.4)
T5: 33 (3.4, 24.3)

C: CAUTION

• Wear appropriate work clothing, including a cap, protective goggles and protective shoes when performing any work.
• Remove contamination including dirt and corrosion before removal, installation or disassembly.
• Keep the disassembled parts in order and protect them from dust and dirt.
• Before removal, installation or disassembly, be sure to clarify the failure. Avoid unnecessary removal, installation, disassembly and replacement.
• Vehicle components are extremely hot after driving. Be wary of receiving burns from heated parts.
• Be sure to tighten fasteners including bolts and nuts to the specified torque.
• Place shop jacks or rigid racks at the specified points.
• Before disconnecting connectors of sensors or units, be sure to disconnect the ground cable from the battery.

2. Starter

A: REMOVAL

1) Disconnect the ground cable from battery.

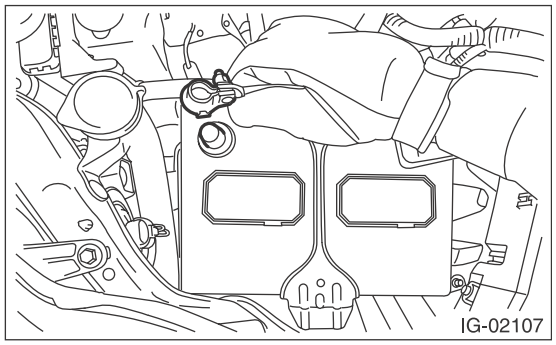

2) Remove the air intake boot assembly. (non-turbo model) <Ref. to IN(H4SO)-8, REMOVAL, Air Intake Boot.> <Ref. to IN(H6DO)-7, REMOVAL, Air Intake Boot.>
3) Remove the intercooler. (turbo model) <Ref. to IN(H4DOTC)-17, REMOVAL, Intercooler.>
4) Disconnect connector (B) and terminal (A) from starter.

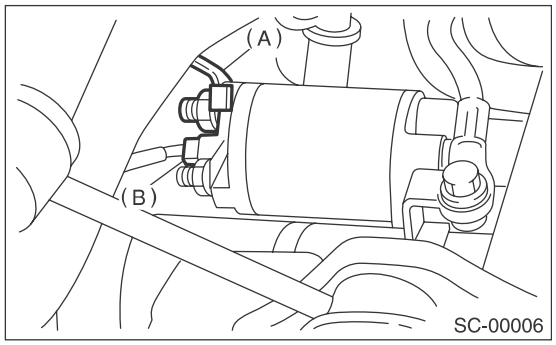

5) Remove the starter from transmission.

NOTE:
For the MT model, a bolt is used in place (A).

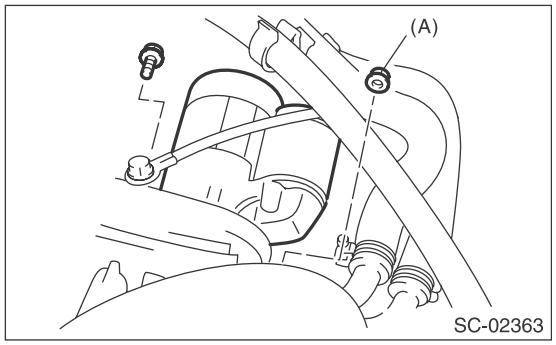

B: INSTALLATION

Install in the reverse order of removal.

NOTE:
For the MT model, a bolt is used in place (A).

Tightening torque:
50 N·m (5.1 kgf-m, 36.9 ft-lb)

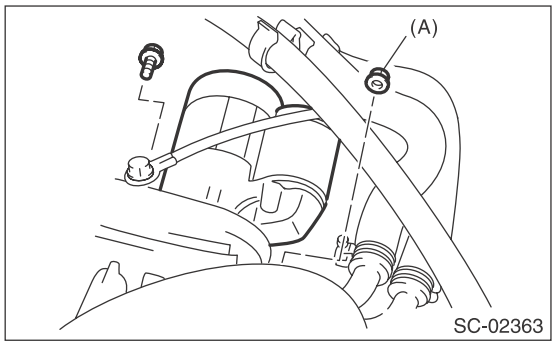

Tightening torque:
10 N·m (1.0 kgf-m, 7.4 ft-lb)

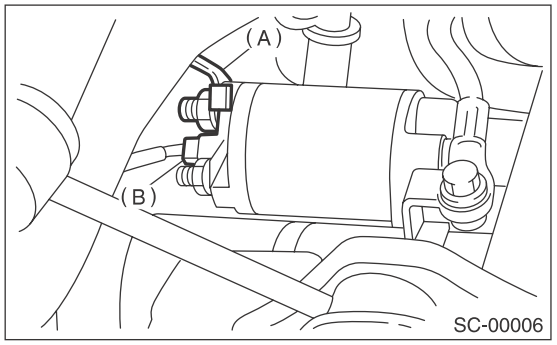

C: DISASSEMBLY

1) Remove the nut which holds terminal M (A) of the magnet switch assembly, then disconnect the harness from the terminal.

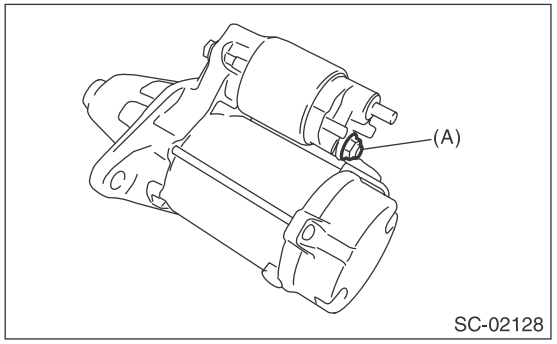

2) Remove the nuts fastening the magnet switch assembly to the starter housing, then remove the magnet switch assembly.

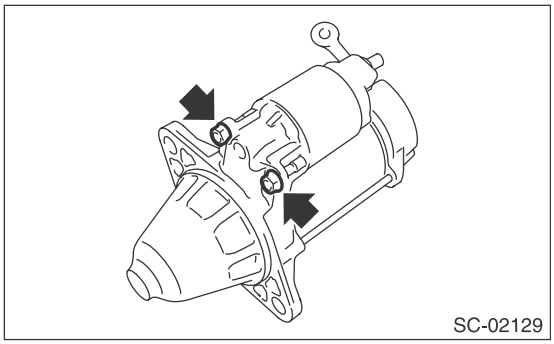
SC-02129

3) Remove the starter seal.

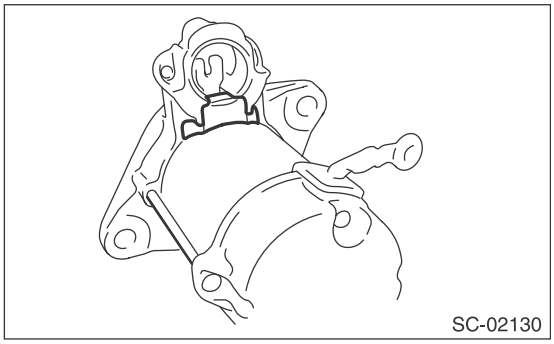
SC-02130

4) Remove the through bolts on both sides, and remove the starter housing.

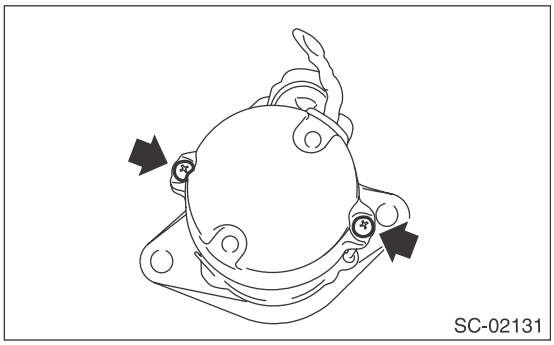
SC-02131

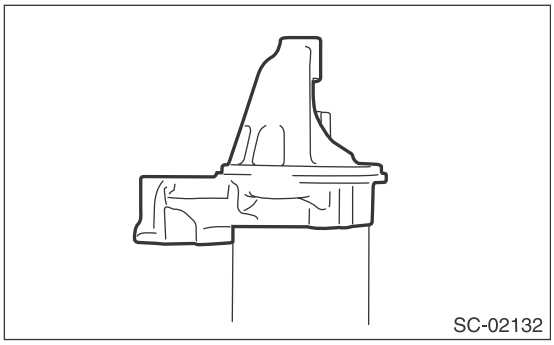
SC-02132

5) Remove the shift lever.

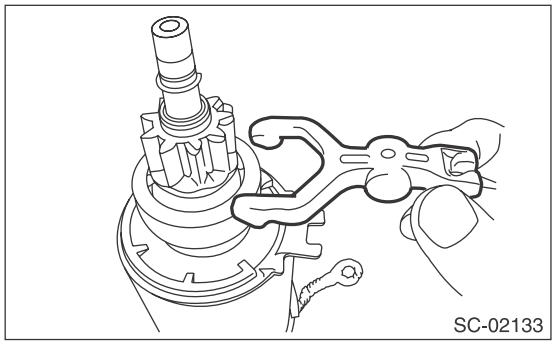
SC-02133

6) Remove the overrunning clutch, shock absorber bearing, and shaft from the yoke as a single unit

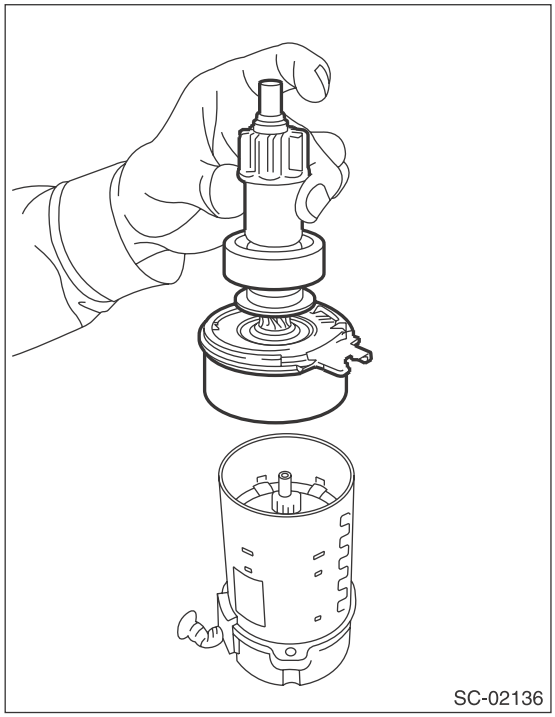
SC-02136

7) Use the following procedures to remove the overrunning clutch from the shaft assembly.

(1) Use an appropriate tool (such as a fit socket wrench), remove the stopper from snap ring by lightly tapping the stopper with a plastic hammer.

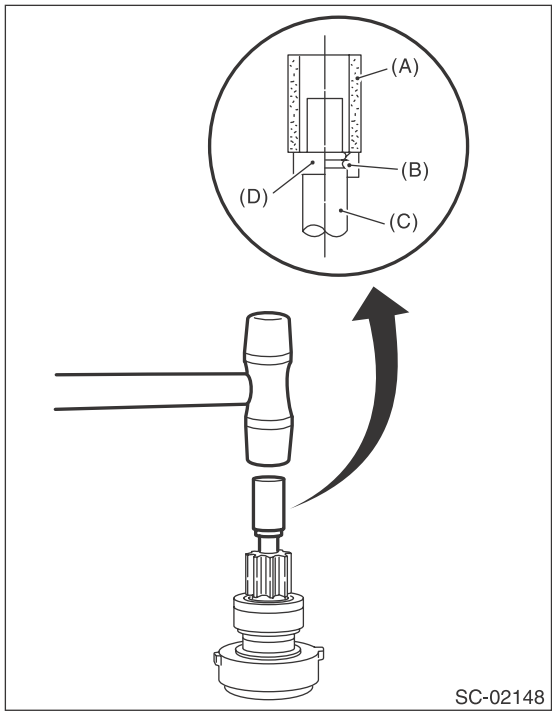

(A) Appropriate tool
(B) Snap ring
(C) Shaft
(D) STOPPER

(2) Remove snap ring (A) from the shaft, and remove stopper (B).

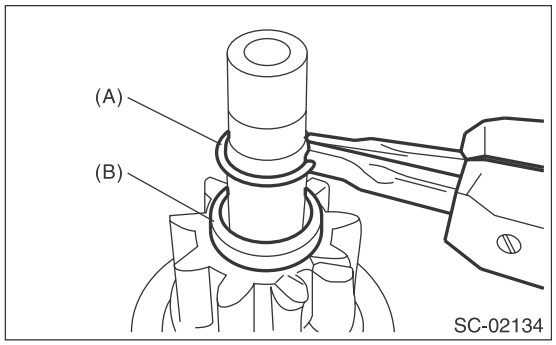

(3) Remove the overrunning clutch from the shaft.

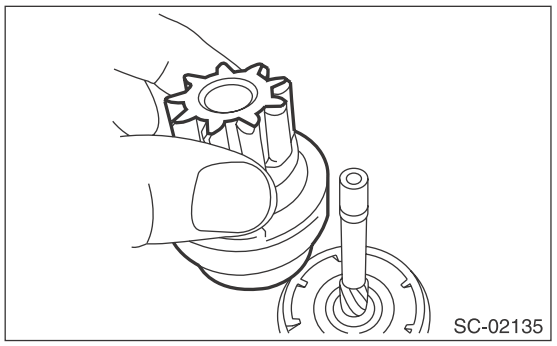

8) Remove the shock absorber in the following procedures:

(1) Remove the starter plate.

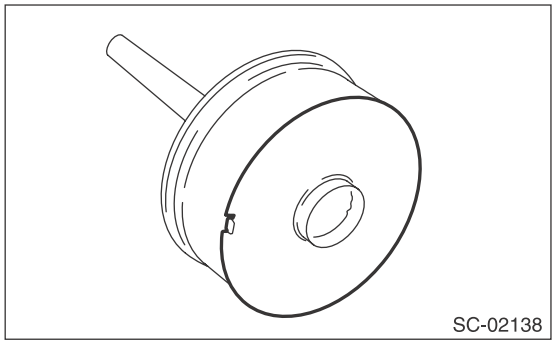

(2) Remove the planetary gear.

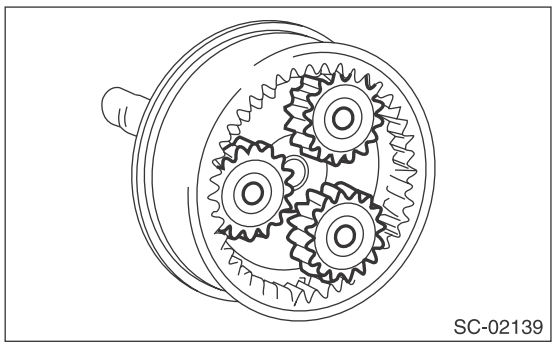

(3) Remove the snap ring, then remove the shaft.

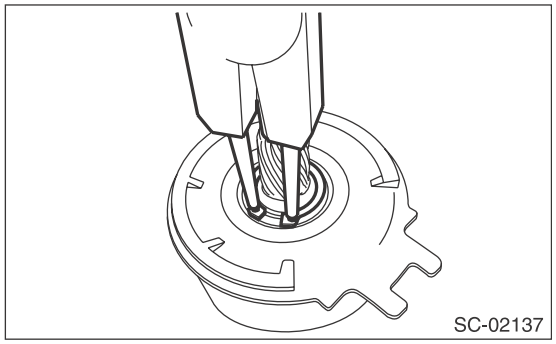
SC-02137

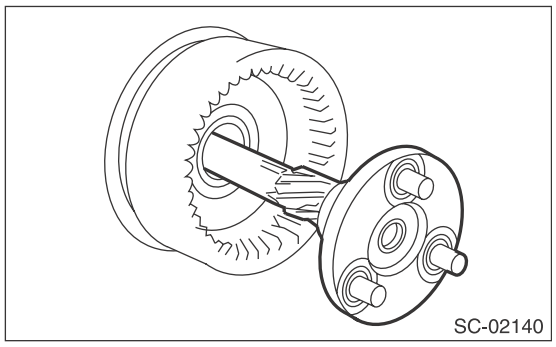
SC-02140

(4) Separate shock absorber bearing (A) from internal gear (B), and remove shock absorber (C).

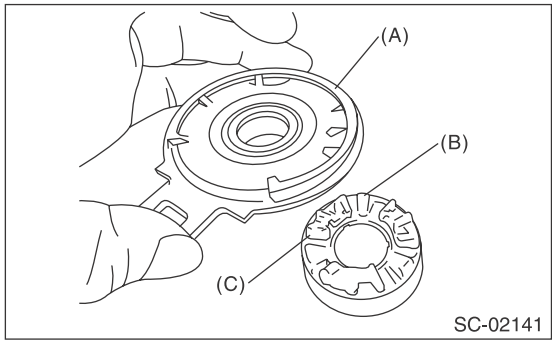

SC-02141

9) Remove the screws, and remove the starter cover from the brush holder assembly.

NOTE:
Separate the starter cover by pressing the brush holder assembly using the screws so that the assembly stays onto the armature side.

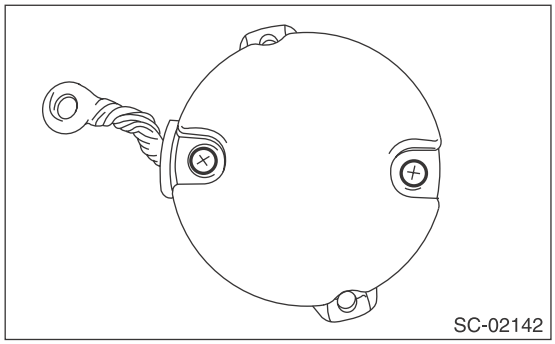
SC-02142

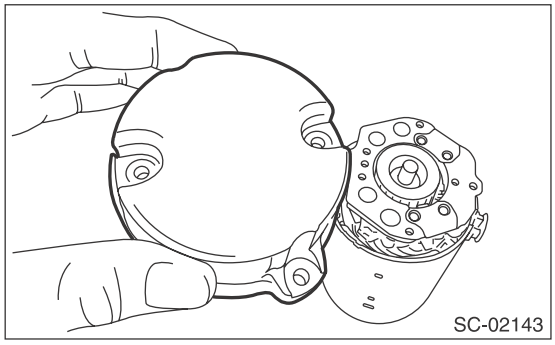
SC-02143

10) Remove the brush holder assembly from the armature.

NOTE:
Expand the brush with your fingers while taking care not to scratch it.

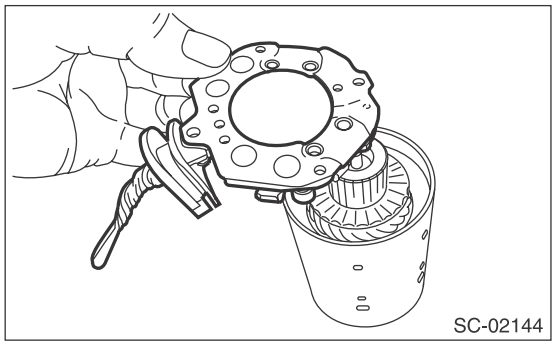
SC-02144

11) Remove the armature from the yoke.

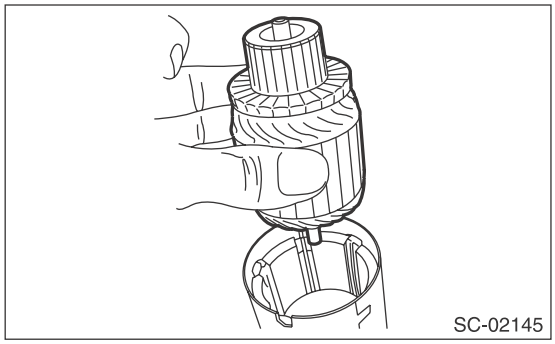
SC-02145

D: ASSEMBLY

1) Install the armature to the yoke.

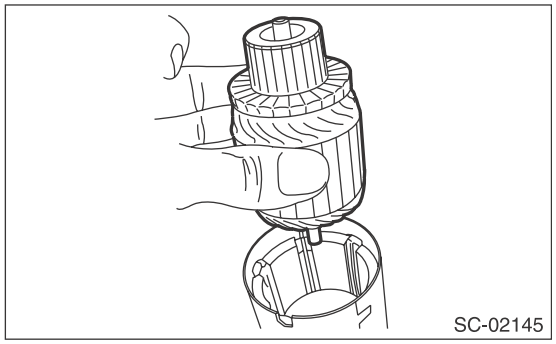

2) Install the brush holder assembly to the armature.

NOTE:
Expand the brush with your fingers while taking care not to scratch it.

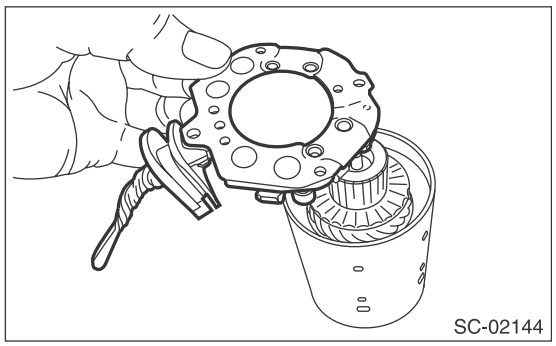

3) Install the starter cover, and secure it to the brush holder assembly with the screws.

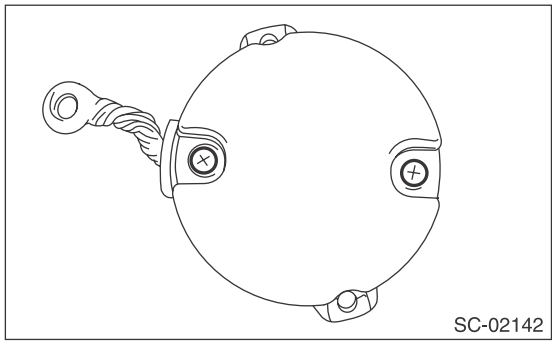

4) Assemble the shock absorber in the following procedures:
   (1) Apply grease to shock absorber (C), and assemble internal gear (B) to shock absorber bearing (A).

NOTE:
Align with the claw position of internal gear to assemble the shock absorber bearing.

Grease:
DENSO HL50

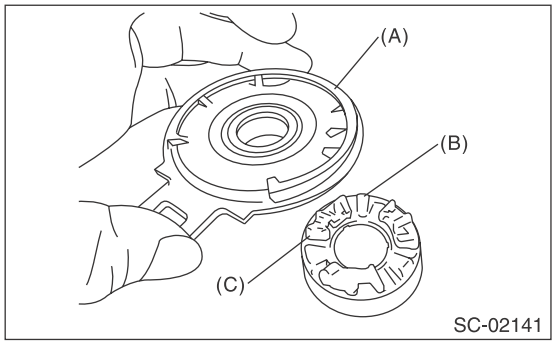

   (2) Assemble the shaft to the internal gear.

NOTE:
Apply grease to the shaft sliding surfaces inside the internal gear.

Grease:
DENSO HL50

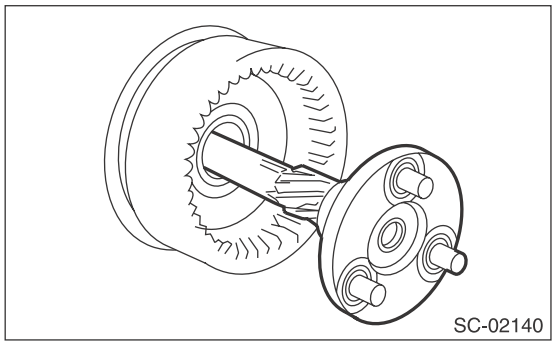

   (3) Attach the snap ring to the shaft.

NOTE:
Use new snap rings.

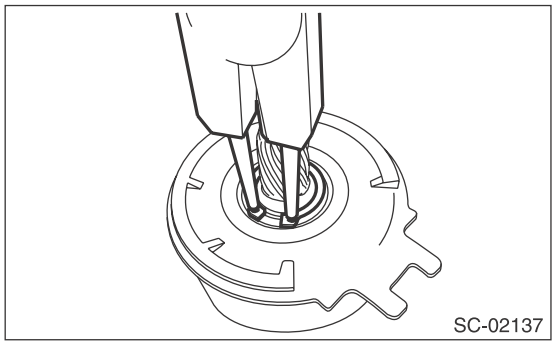

5) Assemble the planetary gear to the internal gear.
   (1) Apply grease to the planetary gear installation position.

Grease:
DENSO HL50

   (2) Install the planetary gear to the pin.
   (3) Apply grease to the planetary gear, internal gear, and upper part of the pin.

NOTE:
• Apply grease so that it contact surfaces of each gear.
• Be careful not to allow dirt to get in.

Grease:
DENSO HL50

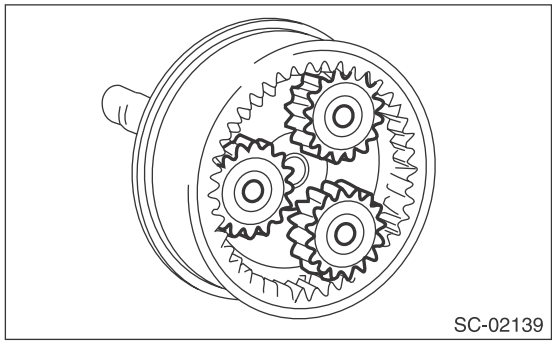

(4) Install the starter plate.

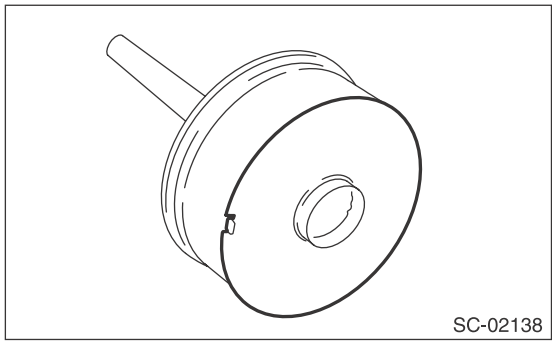

6) Assemble the overrunning clutch as follows:
(1) Apply grease to the spline portion of the shaft.

Grease:
DENSO HL50

(2) Install the overrunning clutch to shaft.

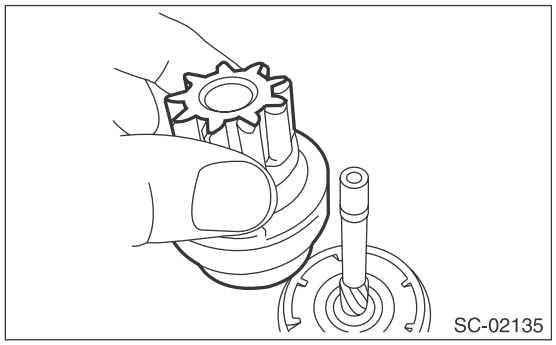

(3) Install stopper (B) to the shaft, then install snap ring (A).

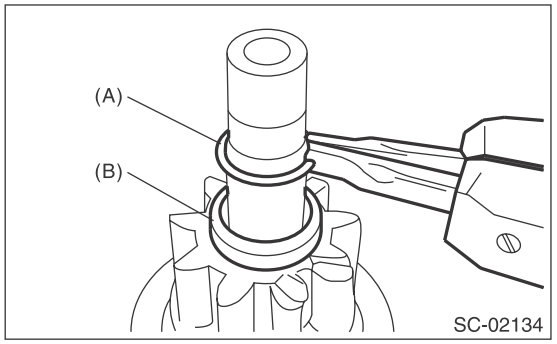

(4) Using a press, pressure fit stopper (B) into snap ring (A).

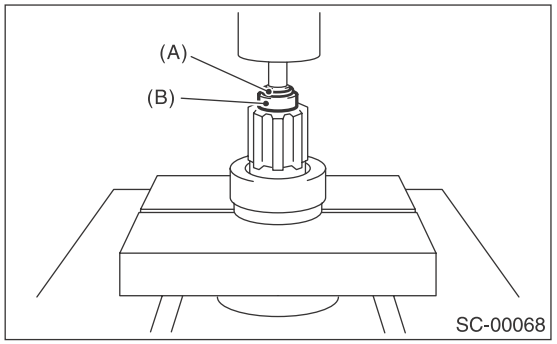

7) Assemble the overrunning clutch, shock absorber, and shaft to the yoke as a single unit

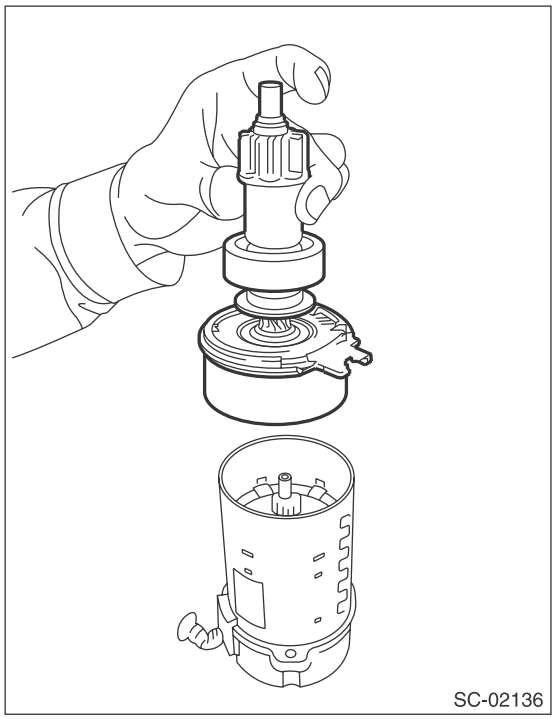

8) Install the shift lever.

NOTE:
Apply grease to the contact area of the shift lever.

Grease:
DENSO HL50

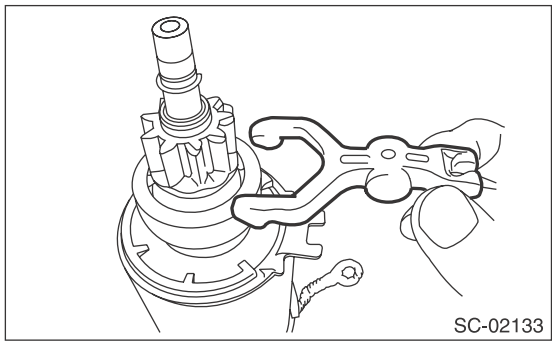

9) Install the starter housing, and tighten through bolts on both sides.

Tightening torque:
6 N·m (0.6 kgf-m, 4.4 ft-lb)

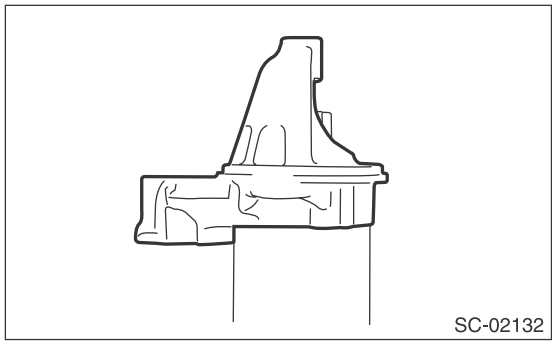

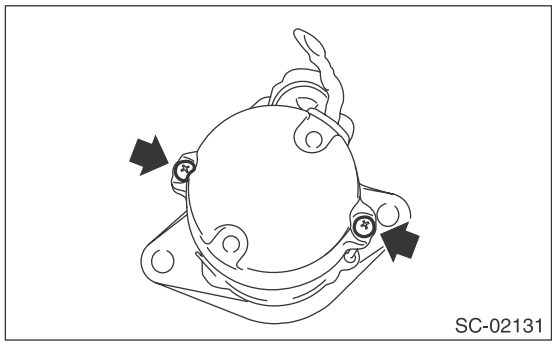

10) Install the starter seal.

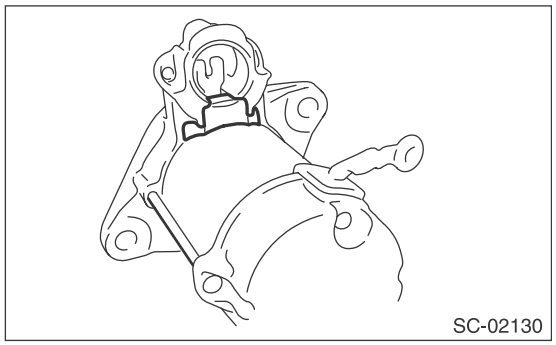

11) Install the magnet switch assembly to the starter housing, and tighten the nuts.

NOTE:
Apply grease to the shift lever installation position.

Grease:
DENSO HL50

Tightening torque:
7.5 N·m (0.8 kgf-m, 5.5 ft-lb)

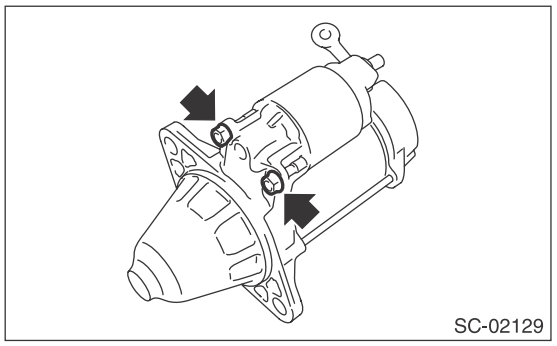

12) Install the harness to the terminal M (A) of the magnet switch assembly, and tighten the nut.

Tightening torque:
10 N·m (1.0 kgf-m, 7.4 ft-lb)

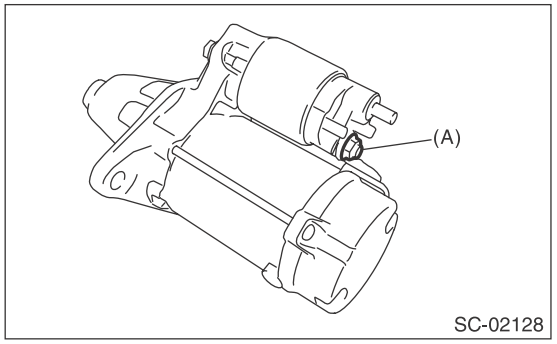

E: INSPECTION

1. SWITCH ASSEMBLY

Using a circuit tester (set to “ohm”), check that there is continuity between terminals S and M, and between terminal S and ground.
Also check to be sure there is no continuity between terminals M and B.

Terminal/Resistance:
S — M/1 Ω or less
S — Ground/1 Ω or less
M — B/1 MΩ or more

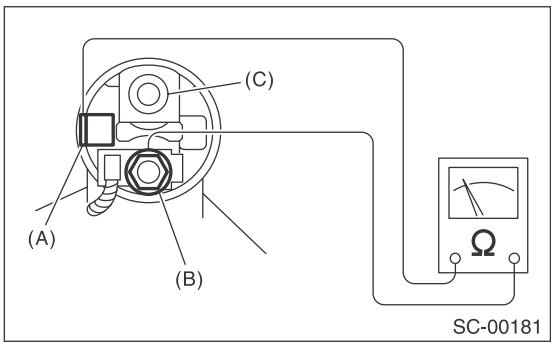

(A) Terminal S
(B) Terminal M
(C) Terminal B

2. SWITCH ASSEMBLY OPERATION

NOTE:
Perform each test in a short period of time (3 — 5 sec).
1) Suction test
Check that the pinion gear comes flying out when the harness is disconnected from terminal M and connected as shown in the figure.

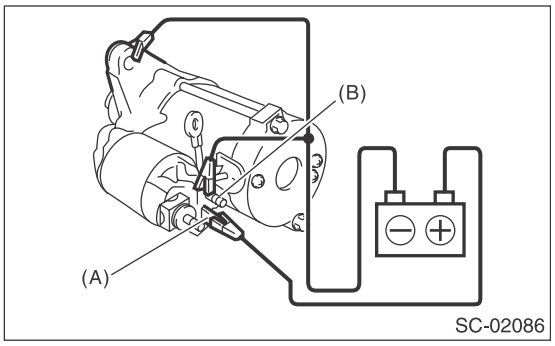

(A) Terminal S
(B) Terminal M

2) Holding test
Check that the pinion gear remains flying out after the cable is disconnected from terminal M.

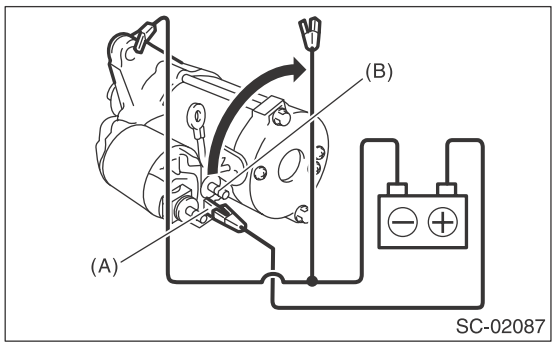

(A) Terminal S
(B) Terminal M

3) Returning test
With terminal S connected to the positive terminal, and terminal M and starter body connected to the battery ground terminal to suction the main contact point, check that the pinion gear returns to its original position when terminal S is disconnected.

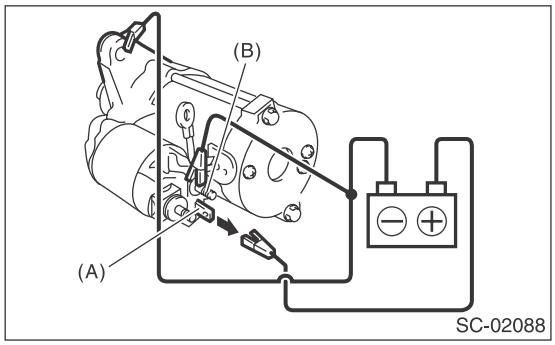

(A) Terminal S
(B) Terminal M

3. PERFORMANCE TEST

The starter should be submitted to performance tests whenever it has been overhauled, to assure its satisfactory performance when installed on the engine.
Three performance tests, no-load test, load test, and lock test, are presented here; however, if the load test and lock test cannot be performed, carry out at least the no-load test.

For these performance tests, use the circuit shown in figure.

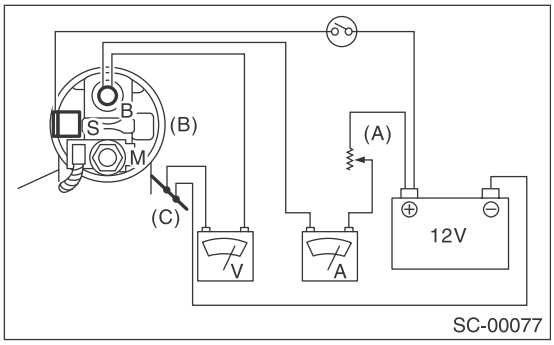

(A) Variable resistance
(B) Magnetic switch
(C) Starter body

1) No-load test
Adjust the variable resistance with the switch on until the voltage is 11 V, and read the value displayed on the ammeter to measure rotating speed. Compare these values with the standard.

No-load test (standard):

Voltage/Current
Max. 11 V/90 A or less

Rotating speed
2.5 L model
1,900 rpm or more
3.6 L model
1,550 rpm or more

2) Load test
Apply the specified braking torque to starter. The condition is normal if the current draw and rotating speed are within standard.

Load test (standard):

Voltage/Load
2.5 L model
8 V/11.1 N·m (1.1 kgf-m, 8.2 ft-lb)
3.6 L model
8 V/12.8 N·m (1.3 kgf-m, 9.4 ft-lb)

Current/Rotating speed
2.5 L model
370 A/910 rpm or more
3.6 L model
370 A/800 rpm or more

3) Lock test
With the starter stalled, or not rotating, measure the torque developed and current draw when the voltage is adjusted to standard voltage.

Lock test (standard):

Voltage/Current
3 V/750 A or less

Torque
2.5 L model
15.5 N·m (1.6 kgf-m, 11.4 ft-lb)
3.6 L model
19.0 N·m (1.9 kgf-m, 14.0 ft-lb)

3. Generator

A: REMOVAL

1) Disconnect the ground cable from battery.

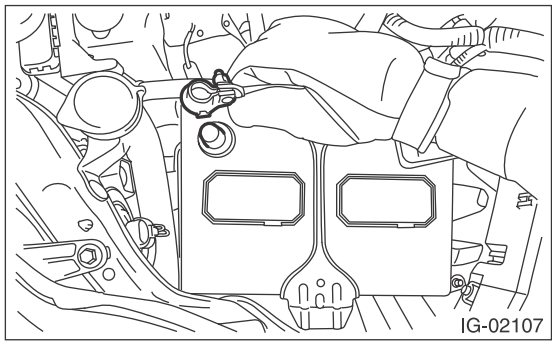

2) Remove the V-belts. <Ref. to ME(H4SO)-42, V-BELT, REMOVAL, V-belt.> <Ref. to ME(H4DOTC)-42, V-BELT, REMOVAL, V-belt.> <Ref. to ME(H6DO)-48, REMOVAL, V-belt.>

3) Disconnect the connector and terminal from generator.

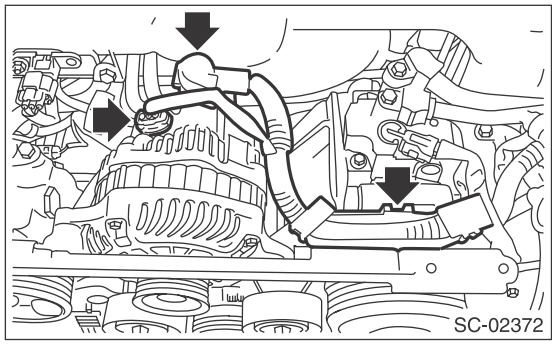

4) Remove the collector cover bracket or v-belt cover bracket.

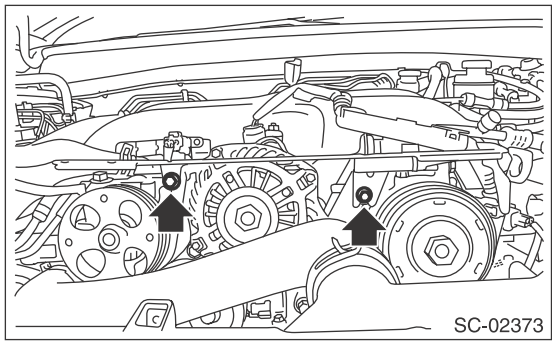

5) Remove the generator from the bracket.

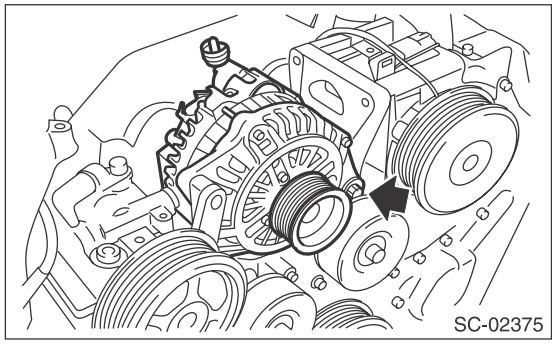

B: INSTALLATION

Install in the reverse order of removal.

Tightening torque:
T1: 25 N·m (2.5 kgf-m, 18.4 ft-lb)
T2: 6.4 N·m (0.7 kgf-m, 4.7 ft-lb)

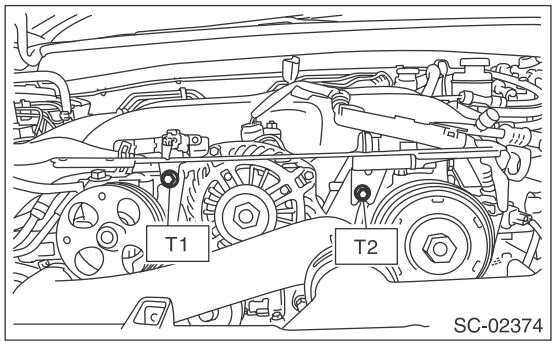

C: DISASSEMBLY

1. 2.5 L MODEL

1) Remove the four through bolts.

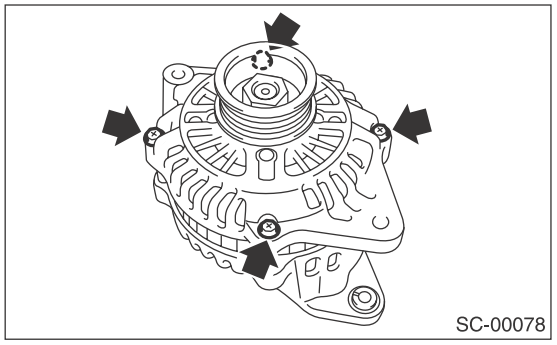

2) Use a drier to heat the rear cover (A) portion to 50°C (122°F).

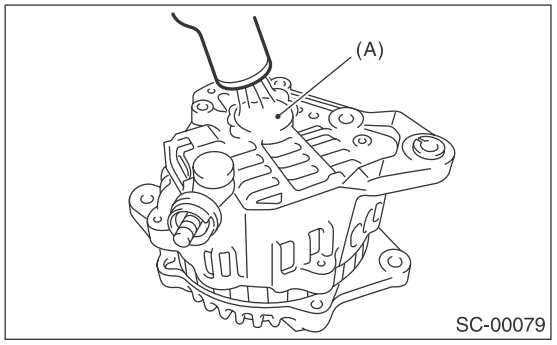

3) Insert the end of a flat tip screwdriver into the gap between stator core and front cover. Pry them apart to disassemble.

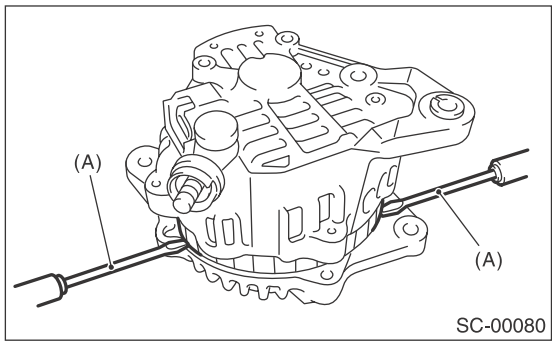

(A) Screwdriver

4) Using a vise, support the rotor and remove the pulley bolt.

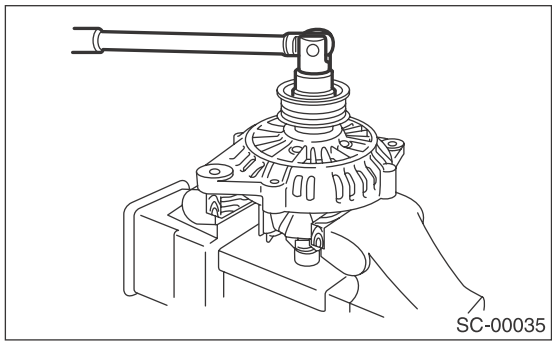

CAUTION:
When holding the rotor with a vise, place aluminum plates or wooden pieces on the vise jaws to prevent rotor from damage.

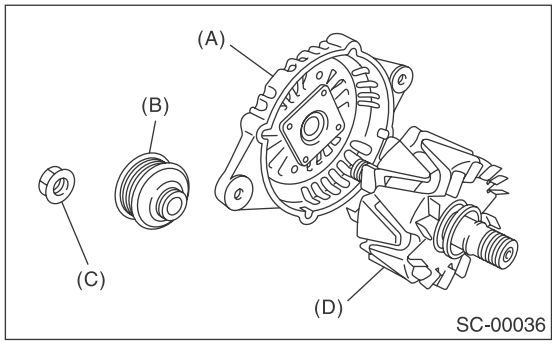

(A) Front cover
(B) Pulley
(C) Nut
(D) Rotor

5) Use the following procedures to remove the ball bearings.

(1) Remove the bolt, and then detach the bearing retainer.

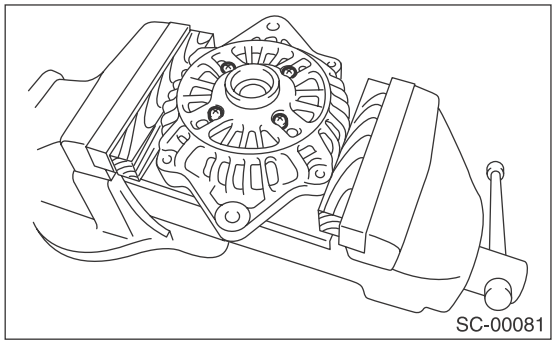

(2) Firmly attach an appropriate tool (such as a correct size socket wrench) to the bearing inner race.

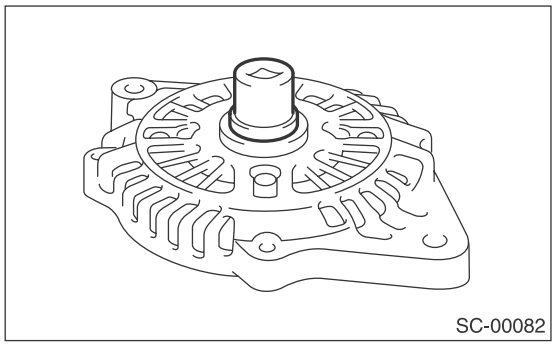

(3) Use the press to push the ball bearings out from the front cover.

6) Using the bearing puller, remove the bearings from the rotor.

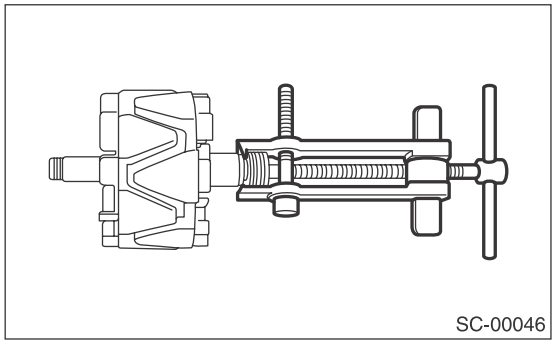

7) Disconnect the connection between the rectifier and stator coil, then remove the stator coil.

CAUTION:
The rectifier is easily damaged by heat. Do not allow a 180 — 270 W soldering iron to contact the terminals for 5 seconds or more at a time.

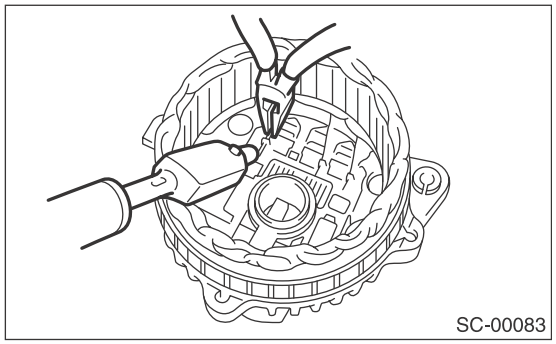
SC-00083

8) Use the following procedures to remove the IC regulator.
(1) Remove the screws which secure the IC regulator to the rear cover.

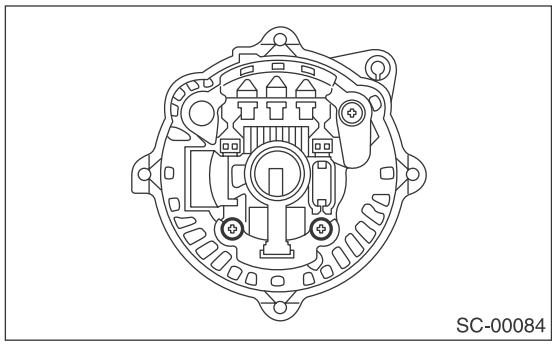
SC-00084

(2) Disconnect the connection between the IC regulator and rectifier, then remove the IC regulator.

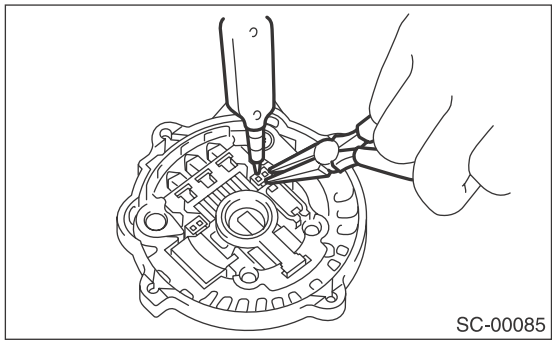
SC-00085

9) Use the following procedures to remove the brush.
(1) Remove the cover A.

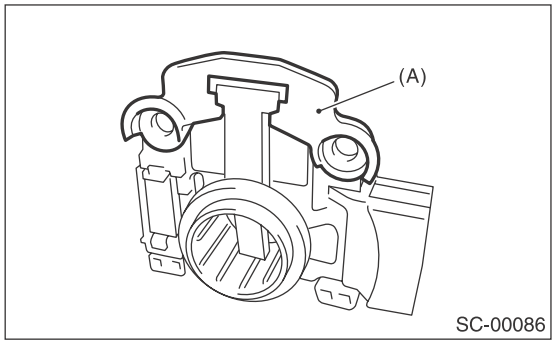

SC-00086

(A) Cover A

(2) Remove the cover B.

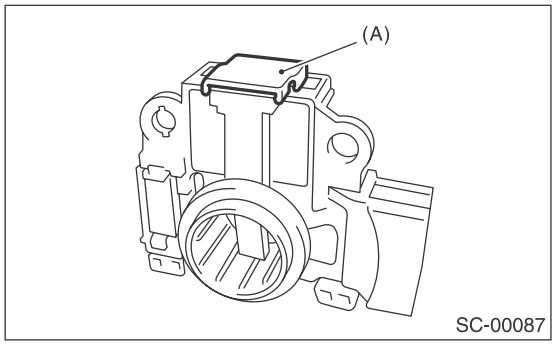

SC-00087

(A) Cover B

(3) Disconnect the connection and remove the brush.

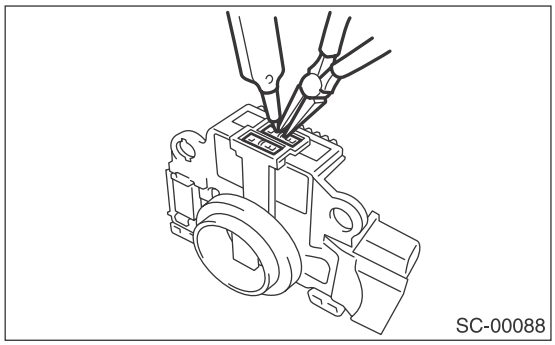
SC-00088

10) Remove the rectifier as follows.
(1) Remove the bolts which secure the rectifier.

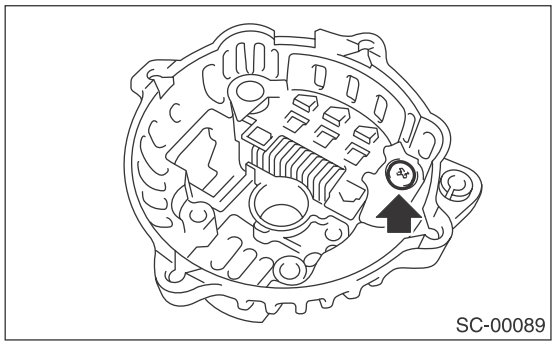
SC-00089

(2) Remove the cover on terminal B.

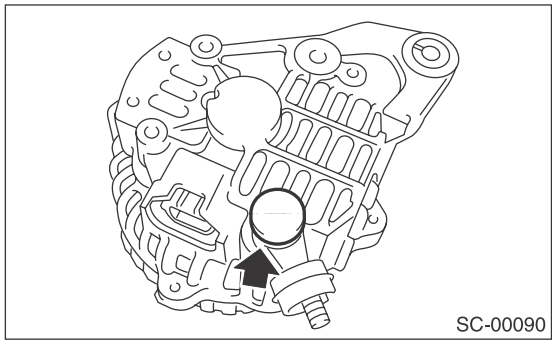
SC-00090

(3) Remove the nuts of terminal B, then remove the rectifier.

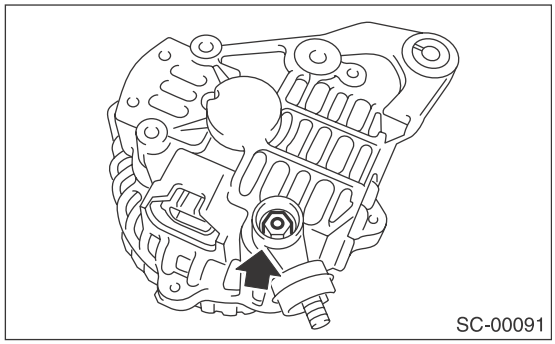
SC-00091

2. 3.6 L MODEL

1) Remove the four through bolts.

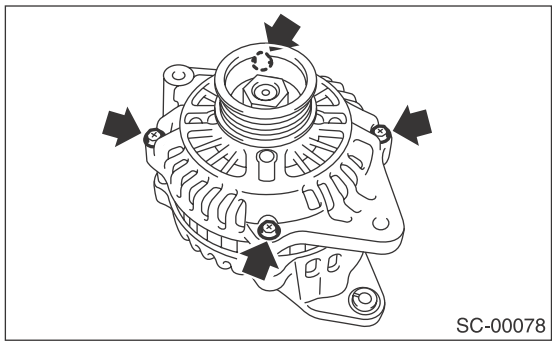
SC-00078

2) Use a drier to heat the rear cover (A) portion to 50 — 60°C (122 — 140°F).

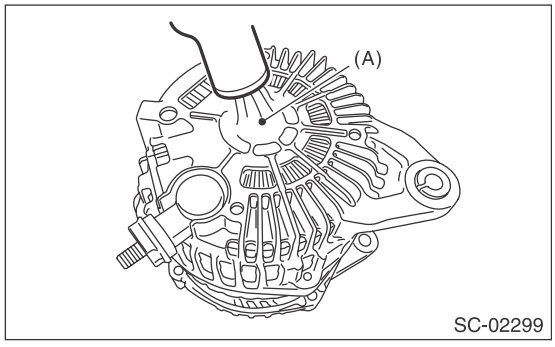

SC-02299

3) Insert the end of a flat tip screwdriver into the gap between stator core and front cover. Pry them apart to disassemble.

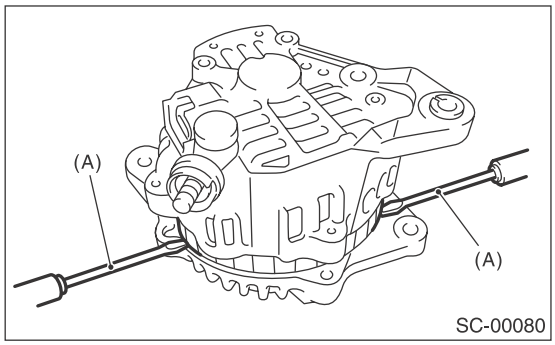

SC-00080

(A) Screwdriver

4) Using a vise, support the rotor and remove the pulley bolt.

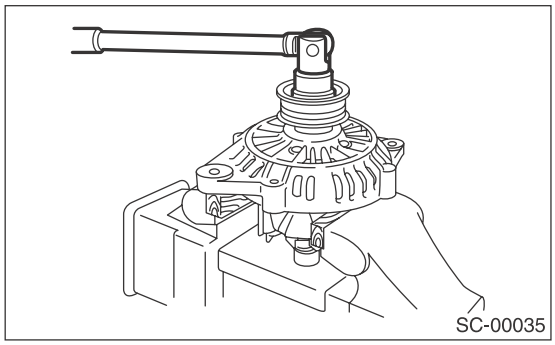
SC-00035

CAUTION:
When holding the rotor with a vise, place aluminum plates or wooden pieces on the vise jaws to prevent rotor from damage.

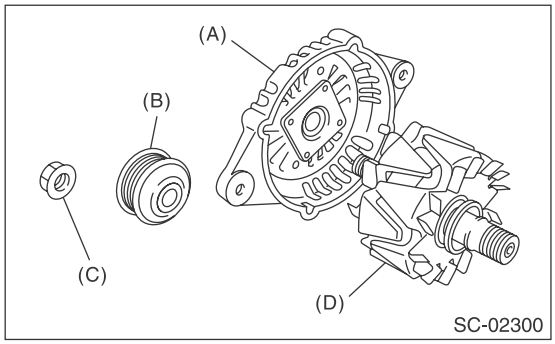

SC-02300

(A) Front cover
(B) Pulley
(C) Nut
(D) Rotor

5) Use the following procedures to remove the ball bearings.

(1) Remove the bolt, and then detach the bearing retainer.

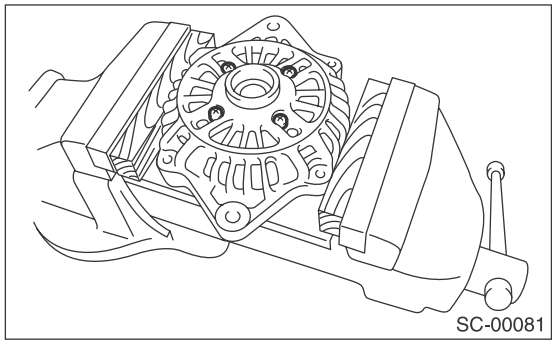
SC-00081

(2) Firmly attach an appropriate tool (such as a correct size socket wrench) to the bearing inner race.

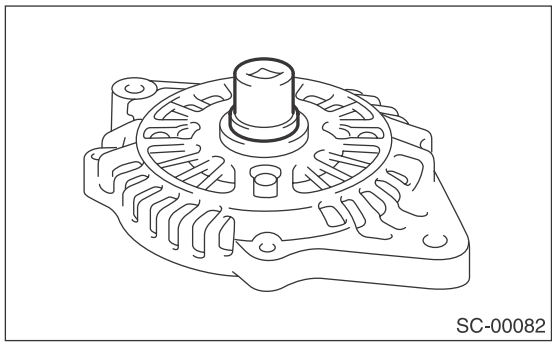
SC-00082

(3) Use the press to push the ball bearings out from the front cover.

6) Using the bearing puller, remove the bearings from the rotor.

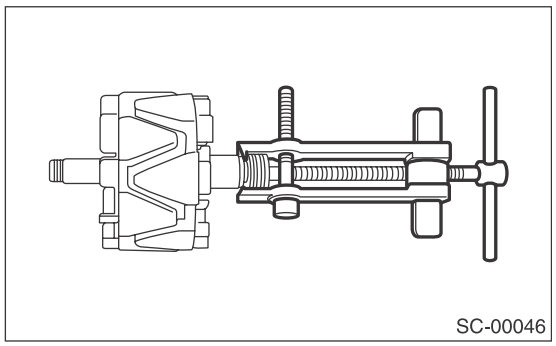
SC-00046

7) Remove six bolts between the rectifier and stator coil, then remove the stator coil.

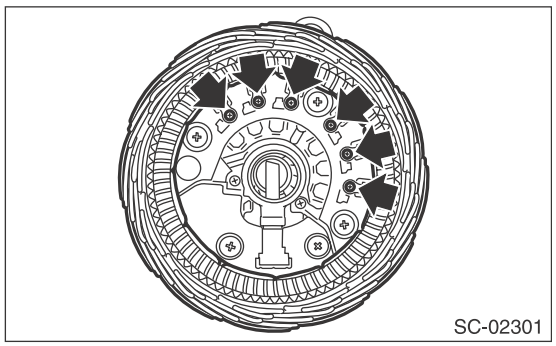
SC-02301

8) Remove four screws which secure the IC regulator to the rear cover, then remove the IC regulator.

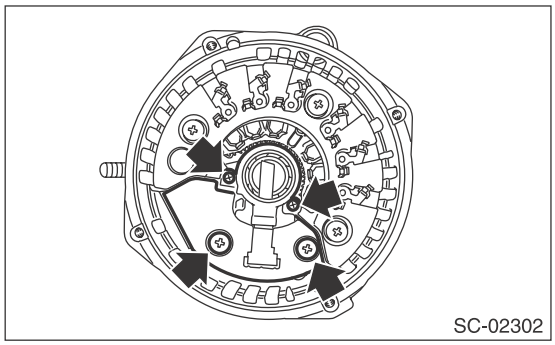
SC-02302

9) Use the following procedures to remove the brush.

(1) Remove the cover A.

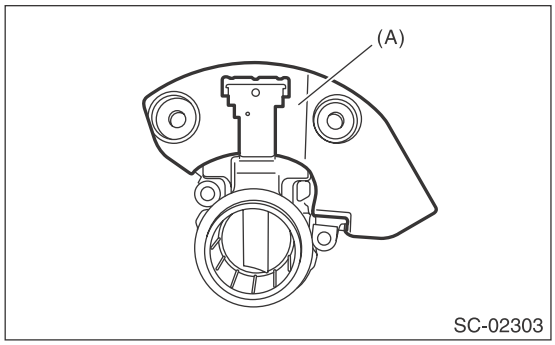

SC-02303

(A) Cover A

(2) Remove the cover B.

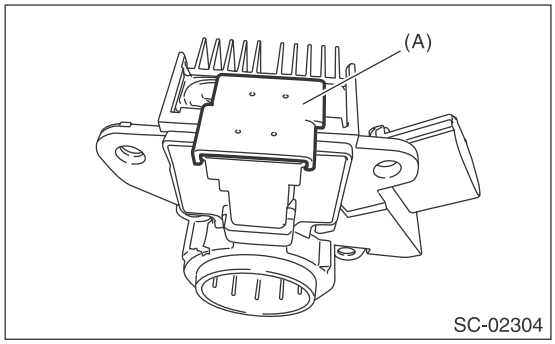

SC-02304

(A) Cover B

(3) Disconnect the connection and remove the brush.

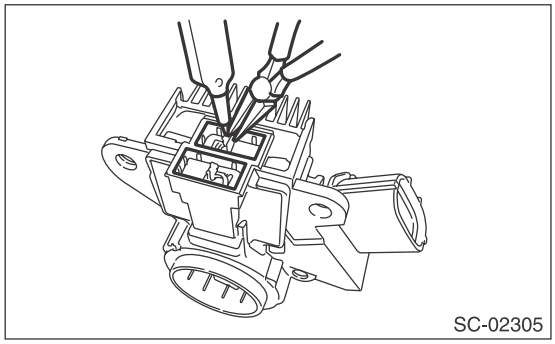
SC-02305

10) Remove the rectifier as follows.
(1) Remove the cover on terminal B.

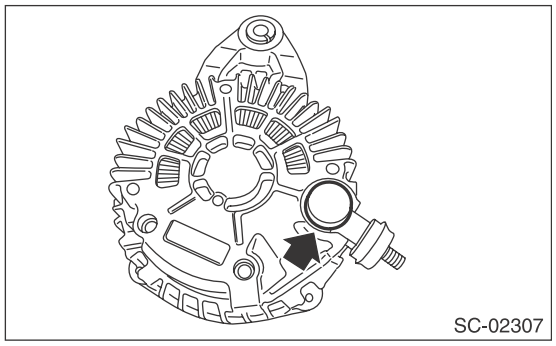
SC-02307

(2) Remove the nut on terminal B.

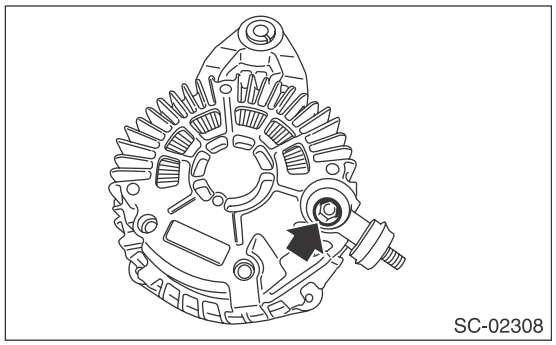
SC-02308

(3) Remove the bolts which secure the rectifier, and remove the rectifier.

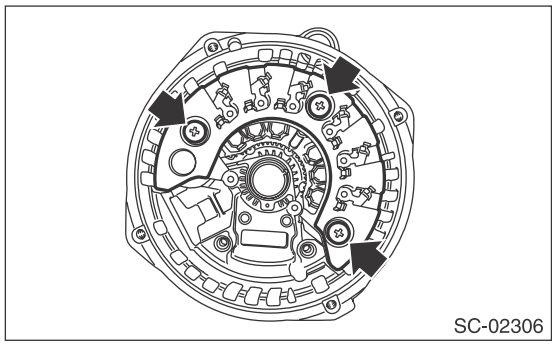
SC-02306

D: ASSEMBLY

Assemble in the reverse order of disassembly.

NOTE:
Refer to component for tightening torque of each part. <Ref. to SC(H4SO)-5, GENERATOR, COMPONENT, General Description.>
1) Push of the brush
Before assembling the front and rear parts, press the brush down into the brush holder, then fix the brush in that position by inserting a [1 mm (0.08 in) dia., 40 — 50 mm (1.6 — 2.0 in) long] wire through the hole as shown in the figure.

CAUTION:
After re-assembling, remove the wire.

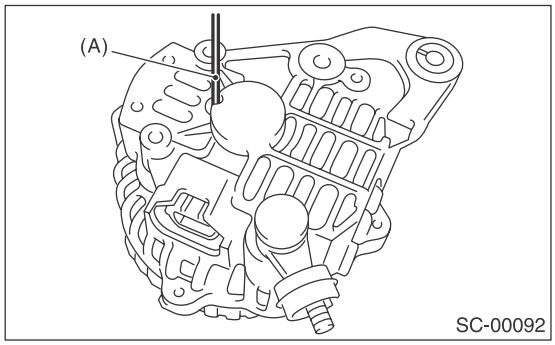

SC-00092

(A) Wire

2) Install the ball bearings.
(1) Set the ball bearings in the front cover, then securely install an appropriate tool (such as a socket wrench of proper size) to the bearing outer race.
(2) Using a press to press the ball bearings into the specified location.
(3) Install the bearing retainer.
3) Use a press to install the bearings (rear side) to the rotor shaft.
4) Heat the bearing box in rear cover to 50 — 60°C (122 — 140°F), and then press the rear bearing into rear cover.

CAUTION:
Do not apply grease to the rear bearings. If there is any oil on the bearing box, remove it completely.
5) After re-assembling, manually turn the pulley to check that the rotor rotates smoothly.

E: INSPECTION

1. DIODE

CAUTION:
There is the possibility of damaging the diodes if a mega-tester (used to measure high voltages) or a similar measuring instrument is used. Never use a mega tester or equivalent for this test.

1) Check for continuity between the diode lead and terminal E or B. If continuity is not as shown in the table, replace the rectifier.

- At analog type tester

Tester lead		Continuity
–lead	+lead	
E	P1, P2, P3, P4, P5, P6	Yes
B		No
P1, P2, P3, P4, P5, P6	E	No
	B	Yes

- At digital type tester

Tester lead		Continuity
–lead	+lead	
E	P1, P2, P3, P4, P5, P6	No
B		Yes
P1, P2, P3, P4, P5, P6	E	Yes
	B	No

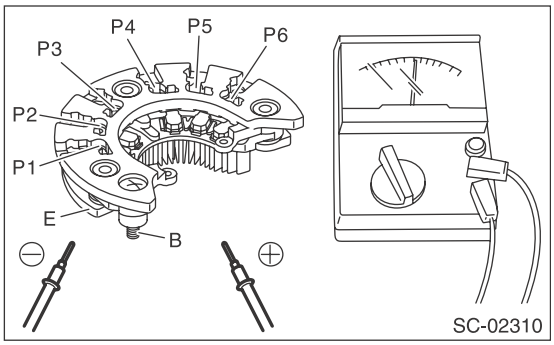

2. ROTOR

1) Slip ring surface
Inspect the slip rings for contamination or any roughness on the sliding surface. Repair the slip ring surface using a lathe or sand paper.
2) Slip ring outer diameter
Measure the slip ring outer diameter. Replace the rotor assembly if the slip ring is worn.

Slip ring outer diameter:
Standard
22.7 mm (0.894 in)
Service limit
22.1 mm (0.870 in)

3) Continuity test
Using a circuit tester, check the resistance between slip rings. If the resistance is not within the standard, replace the rotor assembly.

Specified resistance:
Approximately 2.0 — 2.3 Ω

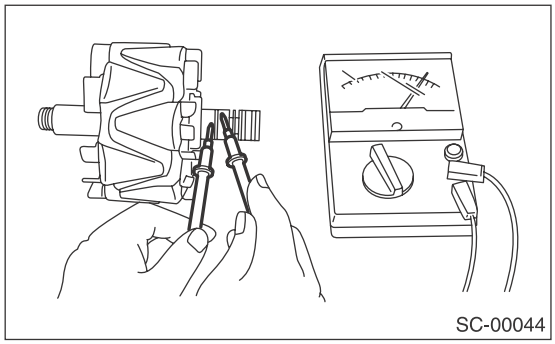

4) Insulation test
Check the continuity between slip ring and rotor core or shaft. If there is continuity, replace the rotor assembly because the rotor coil is grounded.

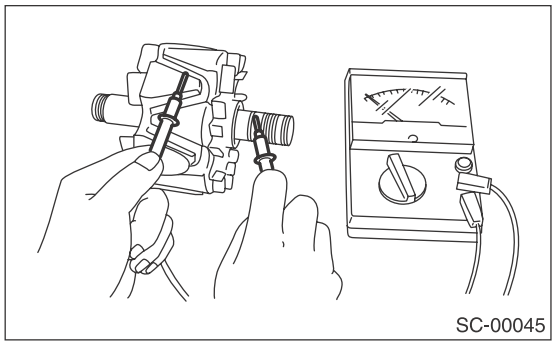

5) Bearing (rear side)
Check the bearing (rear side). If there is any noise, or the rotor does not rotate smoothly, replace the bearings.

3. STATOR COIL

1) Continuity test
Inspect the continuity between the stator coil terminals. If continuity is not as shown in the table, replace the stator coil.

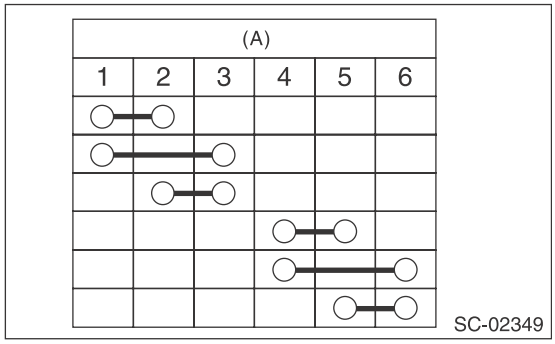

(A) Terminals

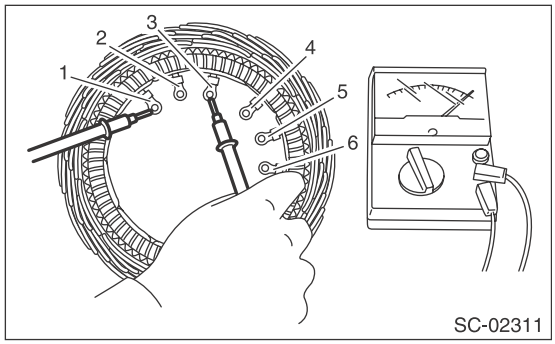

2) Insulation test
Inspect the continuity between the stator coil stator core and lead wire terminals. If there is continuity, replace the stator coil because the stator coil is grounded.

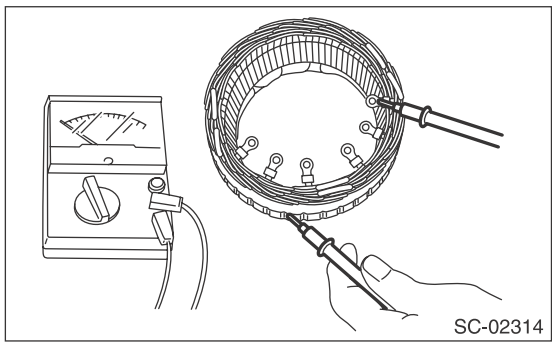

4. BRUSH

1) Measure the length of each brush. Replace the brush if wear exceeds service limits. There is a service limit mark (A) on each brush.

Brush length:
Standard (1)
22.5 mm (0.886 in)
Service limit (2)
5.0 mm (0.197 in)

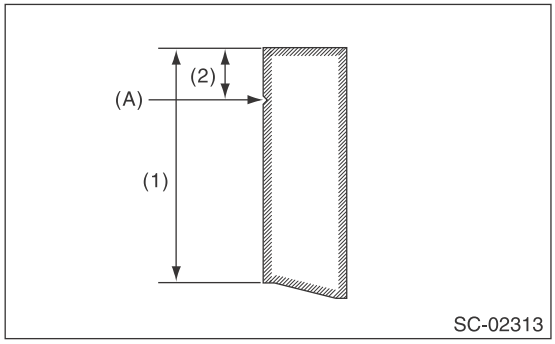

2) Check that there is appropriate pressure on the brush spring. Using a spring pressure indicator, push the brush into the brush holder until its tip protrudes 2 mm (0.08 in). Then measure the pressure of brush spring. If the pressure is 1.7 N (173 gf, 6.11 ozf) or less, replace the brush spring. 4.1 — 5.3 N (418 — 540 gf, 14.75 — 19.06 ozf) pressure is required on the new spring.

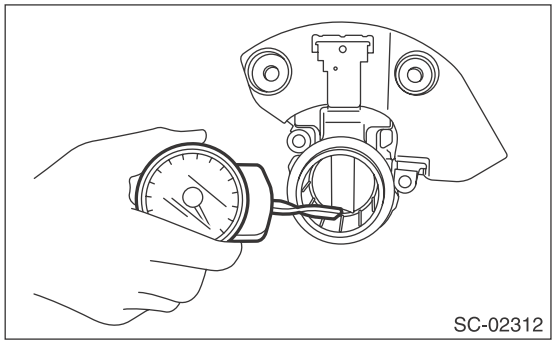

5. BALL BEARING (FRONT SIDE)

Check the ball bearings. Replace the ball bearings if there is resistance in the rotation, or if there is any abnormal noise.

4. Battery

A: REMOVAL

1) After disconnecting the battery ground terminal, remove the terminal cover, then disconnect the positive terminal.
2) Remove the battery cable holder from the battery rod.
3) Remove flange nut from the battery rod and remove battery holder.

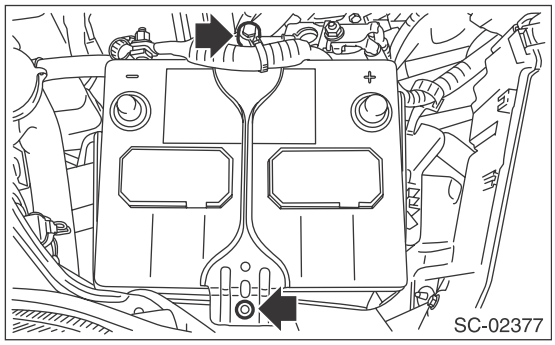

4) Remove the battery.

B: INSTALLATION

Install in the reverse order of removal.

Tightening torque:
3.5 N·m (0.4 kgf-m, 2.6 ft-lb)

NOTE:
• Clean the battery cable terminals and apply grease to retard the formation of corrosion.
• Connect the battery positive (+) terminal, and then connect the negative (–) terminal.
• After the battery is installed, initial diagnosis of the electronic throttle control is performed. Wait for 10 seconds or more after turning the ignition switch to ON, and then start the engine.

C: INSPECTION

WARNING:
• Electrolyte is corrosive acid, and has toxicity; be careful of handling the fluid.
• Make sure the electrode does not come into contact with skin, eyes or clothing. Especially at contact with eyes, flush with water for 15 minutes and get prompt medical attention.
• In addition, be careful not to let the electrode contact with the coated parts.
• Be careful when handling the batteries because they produce explosive gases.
• Be sure to keep battery away from any fire.
• For safety, in case an explosion does occur, wear eye protection or shield your eyes when working near any battery. In addition, never lean over the battery.
• Ventilate sufficiently when using or charging battery in enclosed space.
• Before starting work, remove rings, metal watch-bands, and other metal jewelry.
• Never allow metal tools to contact the positive battery terminal and anything connected to it while you are at the same time in contact with any other metallic portion of the vehicle.

1. EXTERNAL PARTS

Check the battery case, top cover, vent plugs, and terminal posts for dirt or cracks. If necessary, clean with water and wipe with a dry cloth.
Apply a thin coat of grease on the terminal posts to prevent corrosion.

2. ELECTROLYTE LEVEL

Check the electrolyte level in each cell. If the level is below MIN level, bring the level to MAX level by pouring distilled water into the battery cell. Do not fill beyond MAX level.

3. SPECIFIC GRAVITY OF ELECTROLYTE

1) Measure specific gravity of electrolyte using a hydrometer and a thermometer.
Specific gravity varies with temperature of electrolyte so that it must be corrected at 20°C (68°F) using the following calculation:

S_{20} = St + 0.0007 × (t – 20)
S_{20}: Specific gravity corrected at electrolyte temperature of 20°C (68°F)
St: Measured specific gravity
t: Measured temperature (°C)
Judge whether or not battery must be charged, according to corrected specific gravity.
Standard specific gravity: 1.220 — 1.290 [at 20°C (68°F)]

2) Measuring the specific gravity of the electrolyte in the battery will disclose the state of charge of the battery. The relation between specific gravity and state of charge is as shown in the figure.

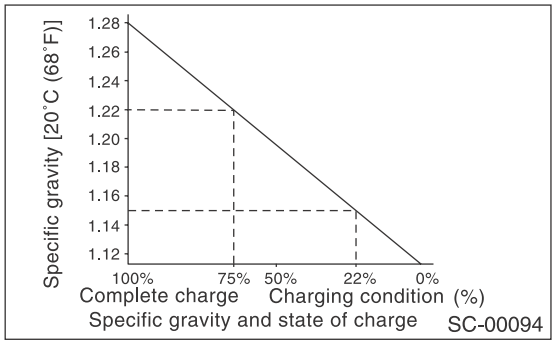

D: MEASUREMENT

WARNING:
Do not bring an open flame close to the battery when working.

CAUTION:
• Prior to charging, corroded terminals should be cleaned with a brush and common caustic soda solution.
• Be careful since battery electrolyte overflows while charging the battery.
• Observe instructions when handling the battery charger.
• Before charging the battery on the vehicle, disconnect the battery ground terminal to prevent damage of generator diodes or other electrical units.

1. JUDGMENT OF BATTERY IN CHARGED CONDITION

1) Specific gravity of electrolyte should be held within the specific range from 1.250 to 1.290 for one hour or more.
2) Voltage per battery cell should be held at a specific value in a range from 2.5 to 2.8 V for one hour or more.

2. CHECK CONDITION OF CHARGE WITH HYDROMETER

Hydrometer indicator	State of charge	Corrective action
Green dot	65% or more	Load test
Dark dot	65% or less	Charge battery
Clear dot	Low electrolyte	Replace the battery.* (If cranking is difficult)
* Check electrical system before replacement.		

3. NORMAL CHARGING

Charge the battery at the current value specified by manufacturer or at approximately 1/10 of battery's ampere-hour rating.

4. QUICK CHARGING

Quick charging is a method that the battery is charged in a short period of time with a relatively large current by using a quick charger.
Since a large current flow raises electrolyte temperature, the battery is subject to damage if the large current is used for prolonged time. For this reason, the quick charging must be carried out within a current range that will not increase the electrolyte temperature above 40°C (104°F).
Also the quick charging is a temporary mean to bring battery voltage up to some level, and battery should be charged slowly with low current as a rule.

CAUTION:
• Observe the items in 3. NORMAL CHARGING.
• Never use 10 A or more when charging the battery because it will shorten the battery life.

ENGINE (DIAGNOSTICS)

EN(H4SO)(diag)

		Page
1.	Basic Diagnostic Procedure	2
2.	Check List for Interview	4
3.	General Description	6
4.	Electrical Component Location	9
5.	Engine Control Module (ECM) I/O Signal	18
6.	Engine Condition Data	28
7.	Data Link Connector	29
8.	General Scan Tool	30
9.	Subaru Select Monitor	34
10.	Read Diagnostic Trouble Code (DTC)	41
11.	Inspection Mode	42
12.	Drive Cycle	47
13.	Clear Memory Mode	54
14.	System Operation Check Mode	55
15.	Malfunction Indicator Light	56
16.	Diagnostics for Engine Starting Failure	66
17.	List of Diagnostic Trouble Code (DTC)	79
18.	Diagnostic Procedure with Diagnostic Trouble Code (DTC)	86
19.	General Diagnostic Table	300

1. Basic Diagnostic Procedure

A: PROCEDURE

1. ENGINE

	Step	Check	Yes	No
1	**CHECK ENGINE START FAILURE.** 1) Ask the customer when and how the trouble occurred using the interview check list. <Ref. to EN(H4SO)(diag)-4, CHECK, Check List for Interview.> 2) Start the engine.	Does the engine start?	Go to step **2**.	Inspection using "Diagnostics for Engine Start Failure". <Ref. to EN(H4SO)(diag)-66, Diagnostics for Engine Starting Failure.>
2	**CHECK ILLUMINATION OF MALFUNCTION INDICATOR LIGHT.**	Does the malfunction indicator light illuminate?	Go to step **3**.	Inspection using "General Diagnostic Table". <Ref. to EN(H4SO)(diag)-300, INSPECTION, General Diagnostic Table.>
3	**CHECK COMMUNICATION STATUS.** 1) Turn the ignition switch to OFF. 2) Connect the Subaru Select Monitor or general scan tool to data link connector. 3) Turn the ignition switch to ON, and run the Subaru Select Monitor or general scan tool. NOTE: • Subaru Select Monitor For detailed procedures, refer to "Subaru Select Monitor". <Ref. to EN(H4SO)(diag)-34, Subaru Select Monitor.> • General scan tool For detailed operation procedures, refer to the general scan tool operation manual.	Does Subaru select monitor or general scan tool communicate with vehicle normally?	Go to step **4**.	Inspection using LAN system "Diagnostic Procedure with Diagnostic Trouble Code (DTC)". <Ref. to LAN(diag)-47, COMMUNICATION FOR INITIALIZING IMPOSSIBLE, Diagnostic Procedure with Diagnostic Trouble Code (DTC).>
4	**CHECK DTC.** Read DTC using Subaru Select Monitor or general scan tool. NOTE: • Subaru Select Monitor Refer to "Read Diagnostic Trouble Code" for detailed operation procedure. <Ref. to EN(H4SO)(diag)-41, Read Diagnostic Trouble Code (DTC).> • General scan tool For detailed operation procedures, refer to the general scan tool operation manual.	Is DTC displayed on Subaru Select Monitor or general scan tool?	Record the DTC. Repair the trouble cause. <Ref. to EN(H4SO)(diag)-79, List of Diagnostic Trouble Code (DTC).> Go to step **5**.	Repair the related parts. NOTE: If DTC is not shown on display although the malfunction indicator light illuminates, perform the diagnosis of malfunction indicator light circuit or combination meter. <Ref. to EN(H4SO)(diag)-56, Malfunction Indicator Light.>

	Step	Check	Yes	No
5	**CHECK FREEZE FRAME DATA.** Check the freeze frame data using the Subaru Select Monitor or general scan tool. NOTE: • Subaru Select Monitor For detailed procedures, refer to "Subaru Select Monitor". <Ref. to EN(H4SO)(diag)-34, Subaru Select Monitor.> • General scan tool For detailed operation procedures, refer to the general scan tool operation manual.	Is freeze frame data displayed on Subaru Select Monitor or general scan tool?	Record the freeze frame data. Repair the cause of fault, and go to the next step. Go to step **6**.	Go to step **6**.
6	**PERFORM DIAGNOSIS.** 1) Perform the Clear Memory Mode. <Ref. to EN(H4SO)(diag)-54, Clear Memory Mode.> 2) Perform the Inspection Mode or drive cycle. <Ref. to EN(H4SO)(diag)-42, Inspection Mode.> <Ref. to EN(H4SO)(diag)-47, Drive Cycle.>	Is DTC displayed on Subaru Select Monitor or general scan tool?	Inspect using "Diagnostic Procedure with Diagnostic Trouble Code (DTC)". <Ref. to EN(H4SO)(diag)-86, Diagnostic Procedure with Diagnostic Trouble Code (DTC).>	Finish the diagnosis.

2. Check List for Interview

A: CHECK

1. CHECK LIST NO. 1

Check the following item when problem has occurred.

NOTE:
Use copies of this page for interviewing customers.

Customer's name		Engine No.	
Date of purchase		Fuel brand	
Date of repair		Odometer reading	km
V.I.N.			miles
Weather	❑ Fine ❑ Cloudy ❑ Rainy ❑ Snowy ❑ Various/Others:		
Ambient air temperature	°C (°F)		
	❑ Hot ❑ Warm ❑ Cool ❑ Cold		
Place	❑ Highway ❑ Suburbs ❑ Inner city ❑ Uphill ❑ Downhill ❑ Rough road ❑ Others:		
Engine temperature	❑ Cold ❑ Warming-up ❑ After warming-up ❑ Any temperature ❑ Others:		
Engine speed	rpm		
Vehicle speed	km/h (MPH)		
Driving conditions	❑ Not affected ❑ At starting ❑ While idling ❑ At racing ❑ While accelerating ❑ While cruising ❑ While decelerating ❑ While turning (RH/LH)		
Headlight	❑ ON/❑ OFF	Rear defogger	❑ ON/❑ OFF
Blower	❑ ON/❑ OFF	Audio	❑ ON/❑ OFF
A/C compressor	❑ ON/❑ OFF	CD/Cassette	❑ ON/❑ OFF
Radiator fan	❑ ON/❑ OFF	Car phone	❑ ON/❑ OFF
Front wiper	❑ ON/❑ OFF	Wireless device	❑ ON/❑ OFF
Rear wiper	❑ ON/❑ OFF		

2. CHECK LIST NO. 2

Check the following item about the vehicle's state when malfunction indicator light turns on.

NOTE:
Use copies of this page for interviewing customers.

a) Other warning lights or indicators illuminate. ❑ Yes / ❑ No
❑ Low fuel warning light ❑ Charge indicator light ❑ Engine coolant temperature warning light ❑ Oil pressure warning light ❑ ATF temperature warning light or SPORT indicator light ❑ Driver's control center differential indicator light ❑ ABS warning light ❑ VDC warning light ❑ Cruise indicator light ❑ SI-CRUISE warning light ❑ Immobilizer indicator light ❑ STEERING warning light ❑ Electronic parking brake warning light ❑ Glow indicator light ❑ Sedimentor warning light ❑ Others:
b) Fuel level
• Lack of fuel: ❑ Yes / ❑ No • Indicator position of fuel gauge: • Experienced running out of fuel: ❑ Yes / ❑ No
c) Intentional connecting or disconnecting of harness connectors or spark plug cords: ❑ Yes / ❑ No
• What:
d) Intentional connecting or disconnecting of hoses: ❑ Yes / ❑ No
• What:
e) Installing of other parts except genuine parts: ❑ Yes / ❑ No
• What: • Where:
f) Occurrence of noise: ❑ Yes / ❑ No
• From where: • What kind:
g) Occurrence of smell: ❑ Yes / ❑ No
• From where: • What kind:
h) Intrusion of water into engine compartment or passenger compartment: ❑ Yes / ❑ No
i) Troubles occurred
❑ Engine does not start. ❑ Engine stalls during idling. ❑ Engine stalls while driving. ❑ Engine speed decreases. ❑ Engine speed does not decrease. ❑ Rough idling ❑ Poor acceleration ❑ Back fire ❑ After fire ❑ Does not shift. ❑ Excessive shift shock

3. General Description

A: CAUTION

1) Airbag system wiring harness is routed near the ECM, main relay and fuel pump relay.

CAUTION:
• Do not use electrical test equipment on the airbag system circuit.
• Be careful not to damage the airbag system wiring harness when servicing the ECM, TCM, main relay and fuel pump relay.

2) Never connect the battery in reverse polarity. Doing so will damage the ECM instantly, and other parts will also be damaged.

3) Do not disconnect the battery terminals while the engine is running. A large counter electromotive force will be generated in the generator, and this voltage may damage electronic parts such as ECM etc.

4) Before disconnecting the connectors of each sensor and ECM, be sure to turn the ignition switch to OFF. Perform the Clear Memory Mode after connecting the connectors. <Ref. to EN(H4SO)(diag)-54, Clear Memory Mode.>

5) When measuring the voltage or resistance of individual sensor or all electrical control modules, use a tapered pin with a diameter of less than 0.6 mm (0.024 in). Do not insert the pin 4 mm (0.16 in) or more into the part.

CAUTION:
When replacing the ECM, be careful not to use the wrong spec. ECM to avoid any damage on the fuel injection system.

NOTE:
When replacing the ECM of the models with Immobilizer, immobilizer system must be registered. To do so, all ignition keys and ID cards need to be prepared. Refer to the “PC application help for Subaru Select Monitor”.

6) Take care not to allow water to get into the connectors when servicing or washing the vehicle in rainy weather. Avoid exposure to water even if the connectors are waterproof.

7) Use ECM mounting stud bolts at the body side grounding point when measuring voltage and resistance inside the passenger compartment.

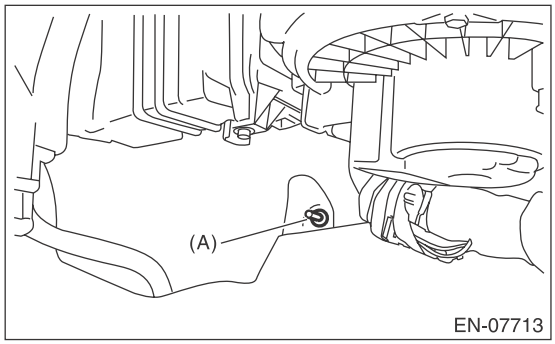

(A) Stud bolt

8) Use the engine ground terminal or engine assembly for the grounding point to chassis when measuring the voltage and resistance in engine compartment.

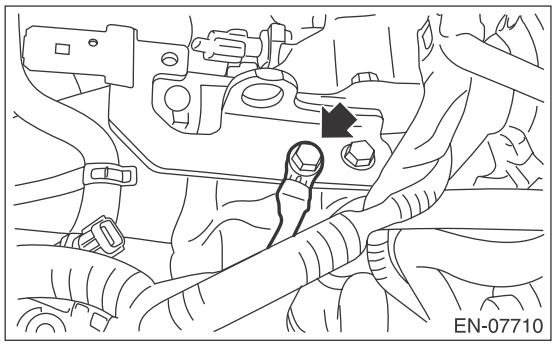

9) Every MFI-related part is a precision part. Do not drop them.

10) Observe the following cautions when installing a radio in vehicle.

CAUTION:
• The antenna must be kept as far apart as possible from control module. (ECM is installed at the back of the glove box.)
• The antenna feeder must be placed as far apart as possible from the ECM and engine control system harness.
• Carefully adjust the antenna for correct matching.
• When mounting a large power type radio, pay special attention to the three items mentioned above.
• Incorrect installation of the radio may affect the operation of ECM.

11) When disconnecting the fuel hose, release the fuel pressure. <Ref. to FU(H4SO)-46, RELEASING OF FUEL PRESSURE, PROCEDURE, Fuel.>

12) For the model with ABS, the ABS warning light may illuminate when performing driving test with jacked-up or lifted-up condition, but this is not a system malfunction. The reason for this is the speed difference between the front and rear wheels. When engine control system diagnosis is finished, perform the VDC memory clearance procedure of self-diagnosis function. <Ref. to VDC(diag)-25, Clear Memory Mode.>

B: INSPECTION

Before performing diagnostics, check the following item which might affect engine problems.

1. BATTERY

1) Measure the battery voltage and specific gravity of the electrolyte.

Standard voltage: 12 V

Specific gravity: 1.260 or more

2) Check the condition of the main and other fuses, and harnesses and connectors. Also check for proper grounding.

2. ENGINE GROUND

Make sure that the engine ground terminal has no contamination, corrosion or looseness and is properly connected to the engine.

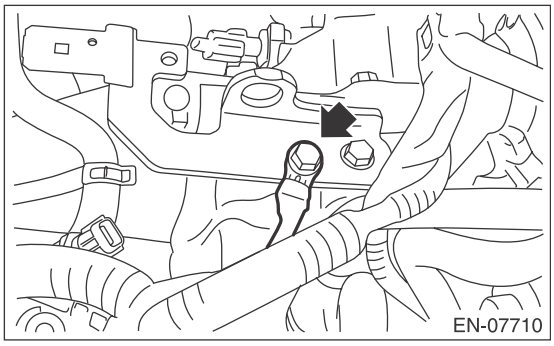

C: NOTE

• The on-board diagnostic (OBD) system detects and indicates a fault in various inputs and outputs of the complex electronic control. Malfunction indicator light in the combination meter indicates occurrence of a fault or trouble.
• Further, against such a failure of sensors as may disable the drive, the fail-safe function is provided to ensure the minimal driveability.
• The OBD system incorporated with the vehicles within this type of engine complies with OBD-II regulations. The OBD system monitors the components and the system malfunction listed in “Engine Section” which affects on emissions.
• When the system decides that a malfunction occurs, malfunction indicator light illuminates. At the same time of the malfunction indicator light illumination or blinking, a DTC and a freeze frame engine conditions are stored into on-board computer.
• The OBD system stores freeze frame engine condition data (engine load, engine coolant temperature, fuel trim, engine speed and vehicle speed, etc.) into on-board computer when it detects a malfunction.
• Freeze frame engine condition data are stored until the DTCs are cleared. However when such malfunctions as fuel trim fault and misfire are detected with the freeze frame engine condition data stored, they are rewritten into those related to the fuel trim fault and misfire.
• When the malfunction does not occur again for three consecutive driving cycles, malfunction indicator light is turned off, but DTC remains at on-board computer.
• When performing diagnosis, connect the Subaru Select Monitor or general scan tool to the vehicle.

D: PREPARATION TOOL

ILLUSTRATION	TOOL NUMBER	DESCRIPTION	REMARKS
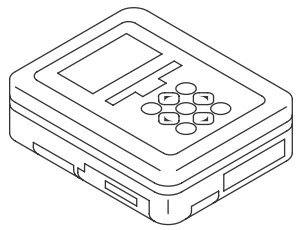 ST1B022XU0	1B022XU0	SUBARU SELECT MONITOR III KIT	Used for troubleshooting the electrical system.
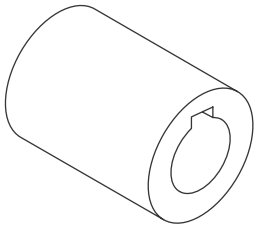 ST-499987500	499987500	CRANKSHAFT SOCKET	Used for rotating crankshaft.

4. Electrical Component Location

A: LOCATION

1. CONTROL MODULE

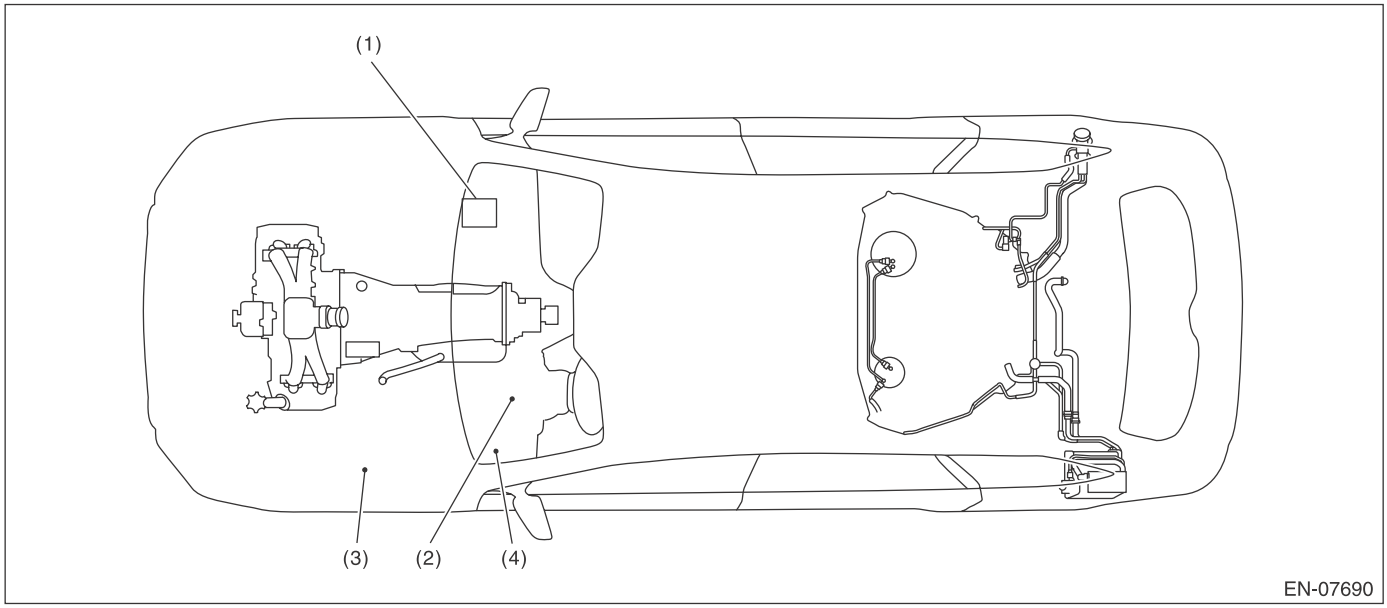

(1) Engine control module (ECM)
(2) Malfunction indicator light
(3) Delivery (test) mode fuse
(4) Data link connector

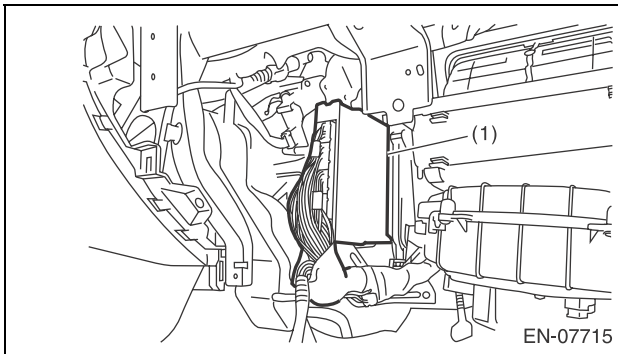

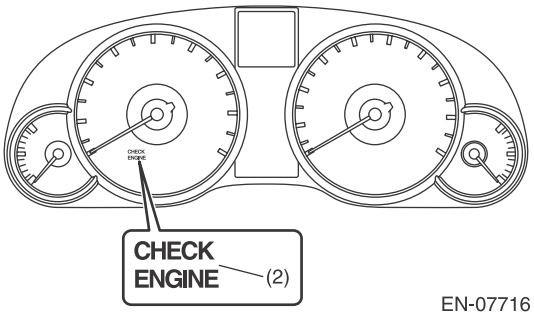

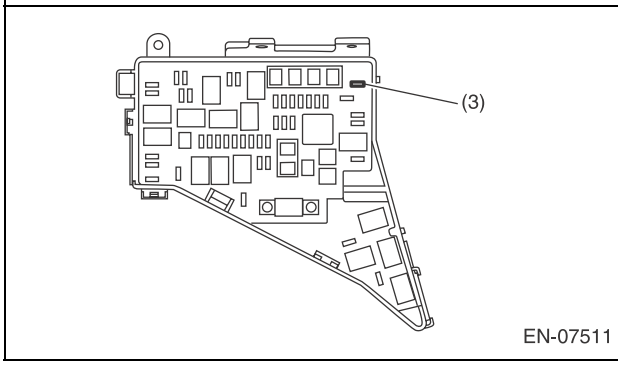

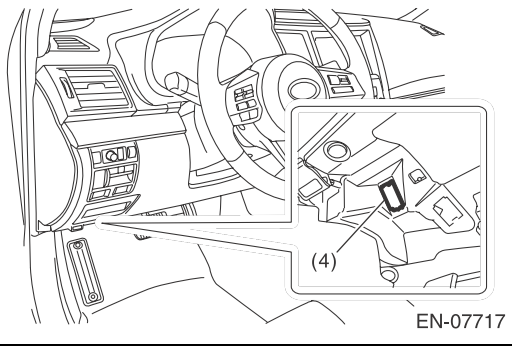

2. SENSOR

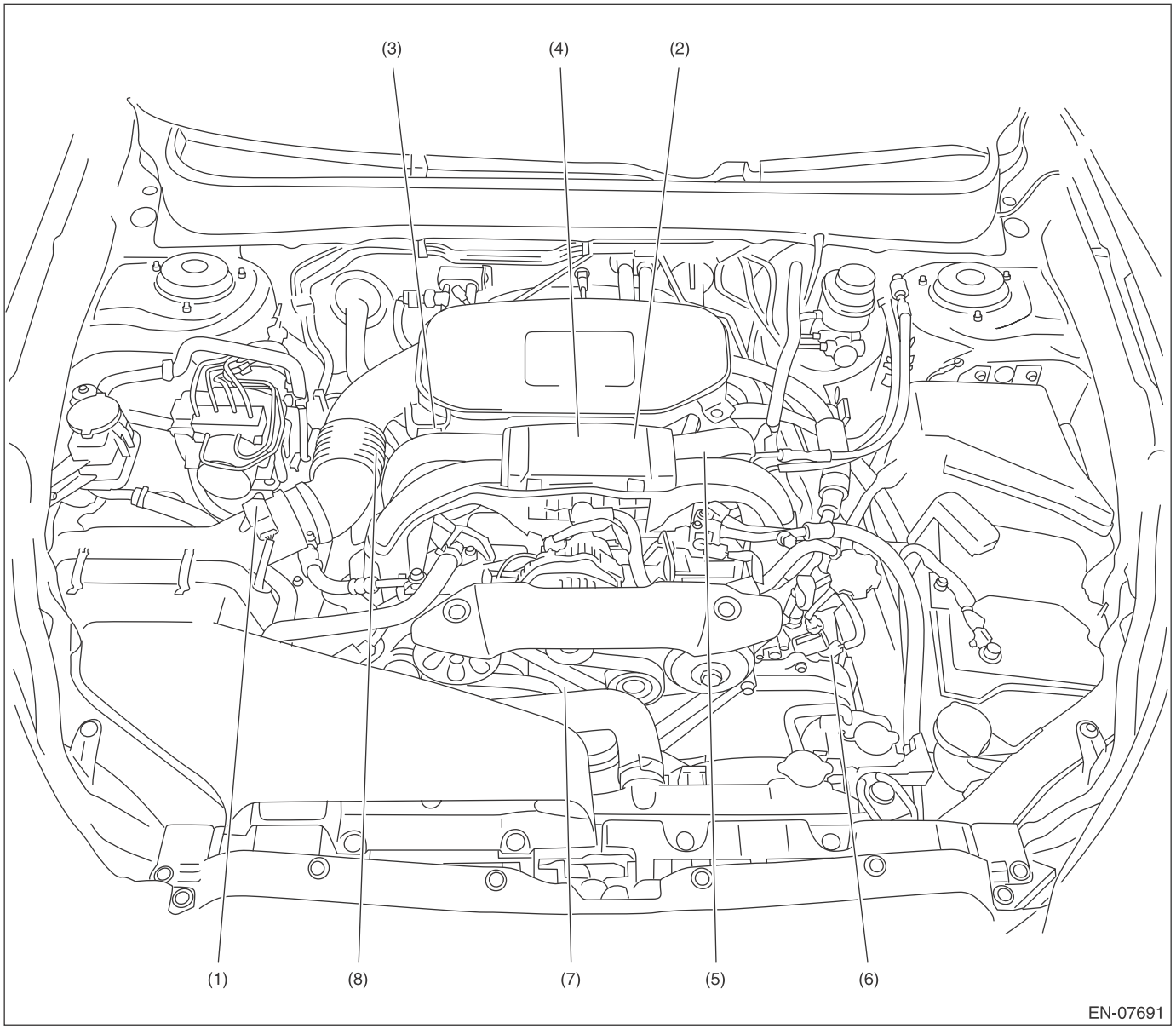

(1) Mass air flow and intake air temperature sensor
(2) Manifold absolute pressure sensor
(3) Engine coolant temperature sensor
(4) Electronic throttle control
(5) Knock sensor
(6) Camshaft position sensor
(7) Crankshaft position sensor
(8) Oil temperature sensor

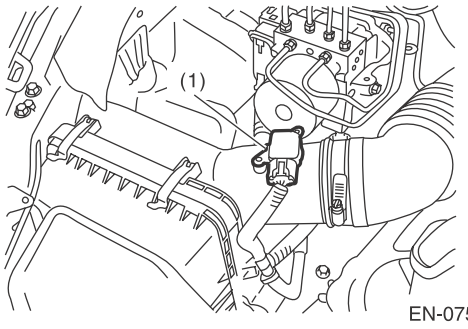
(1)
EN-07595

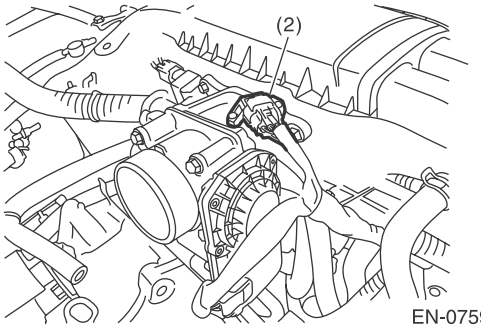
(2)
EN-07596

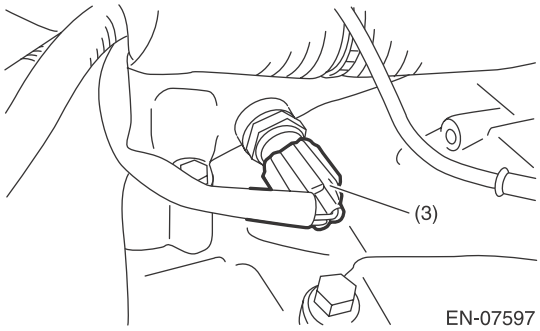
(3)
EN-07597

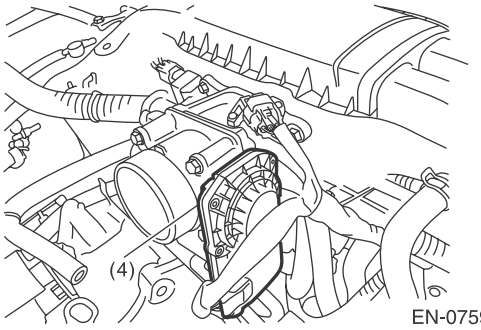
(4)
EN-07598

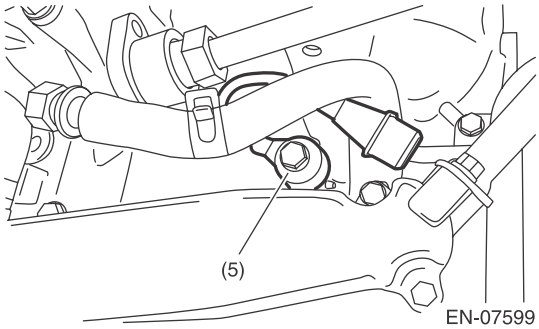
(5)
EN-07599

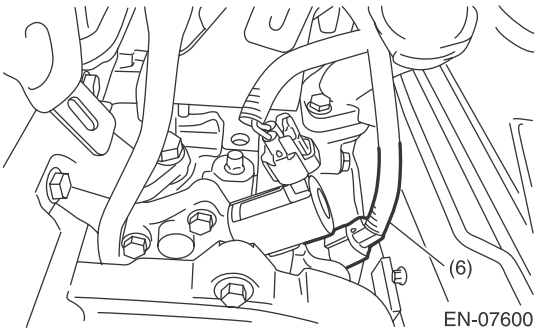
(6)
EN-07600


(7)
EN-07601

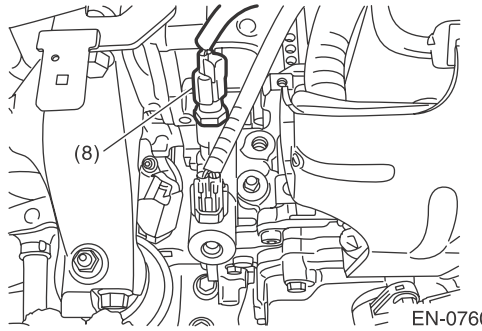
(8)
EN-07602

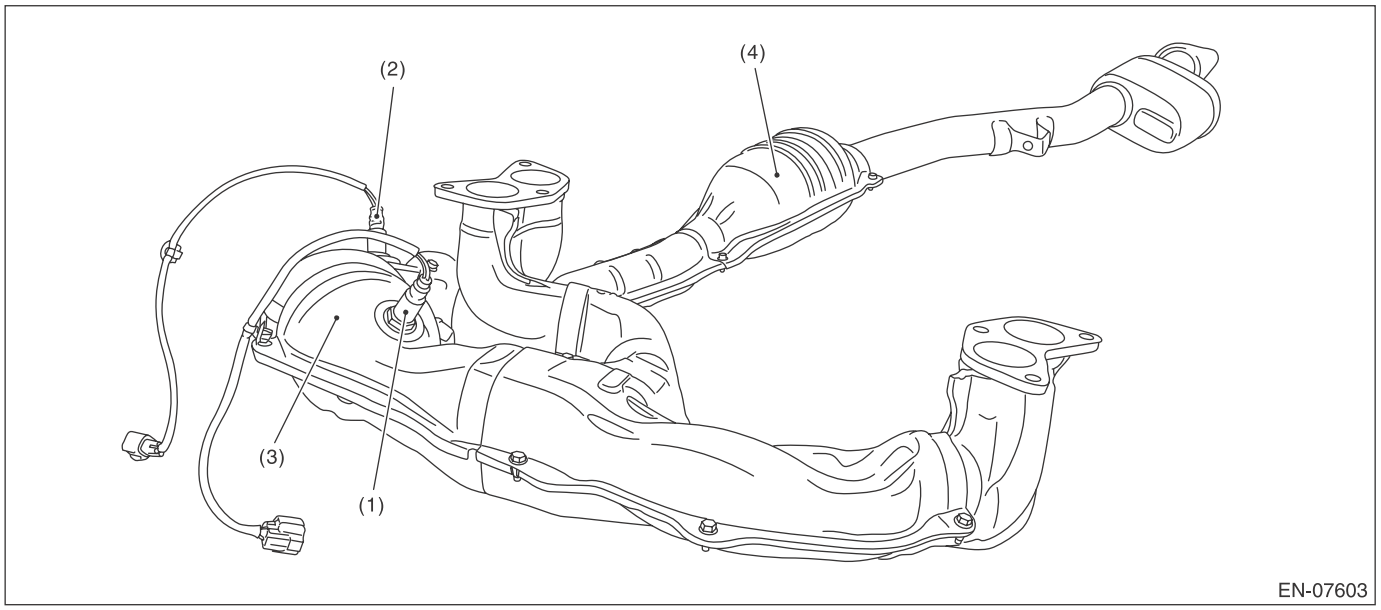

(1) Front oxygen (A/F) sensor
(2) Rear oxygen sensor
(3) Front catalytic converter
(4) Rear catalytic converter

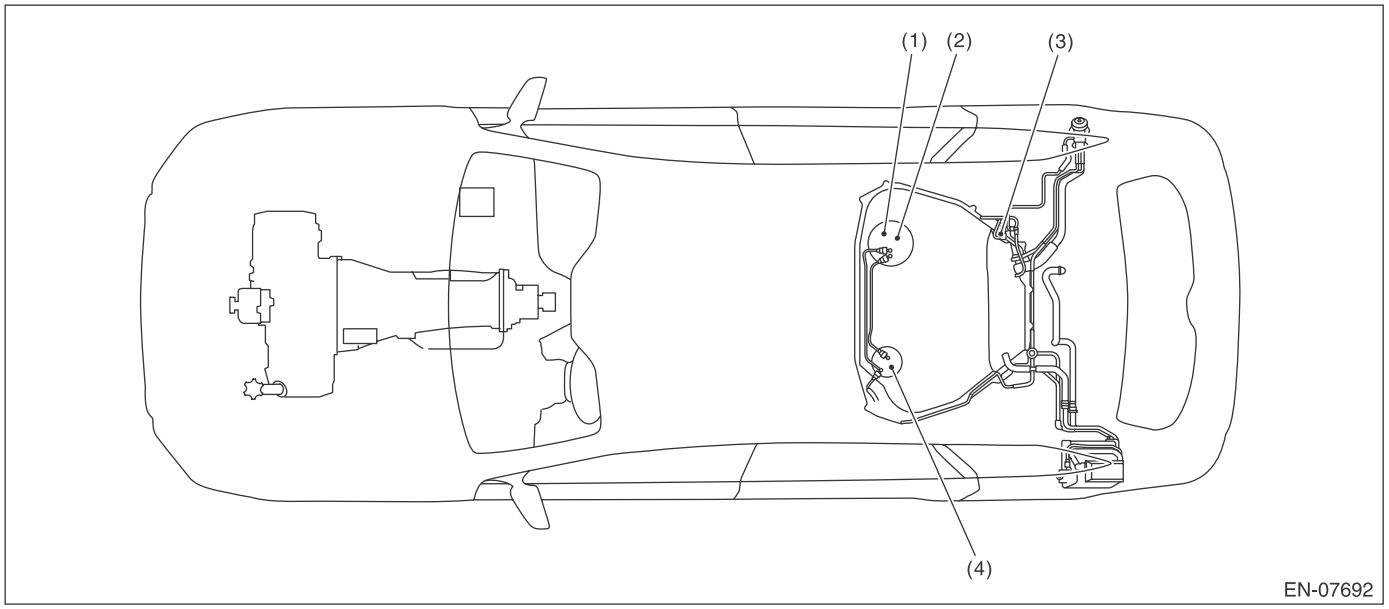

(1) Fuel level sensor
(2) Fuel temperature sensor
(3) Fuel tank pressure sensor
(4) Fuel sub level sensor

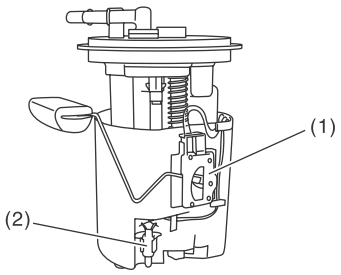

EN-07718

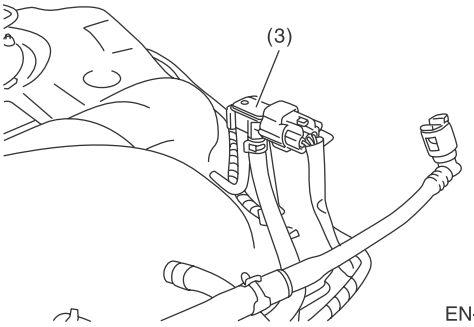

EN-07719

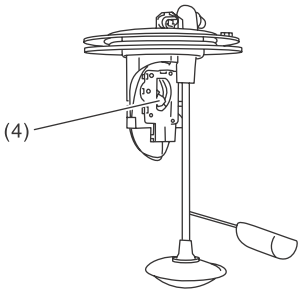

EN-07720

3. SOLENOID VALVE, ACTUATOR, EMISSION CONTROL SYSTEM PARTS AND IGNITION SYSTEM PARTS

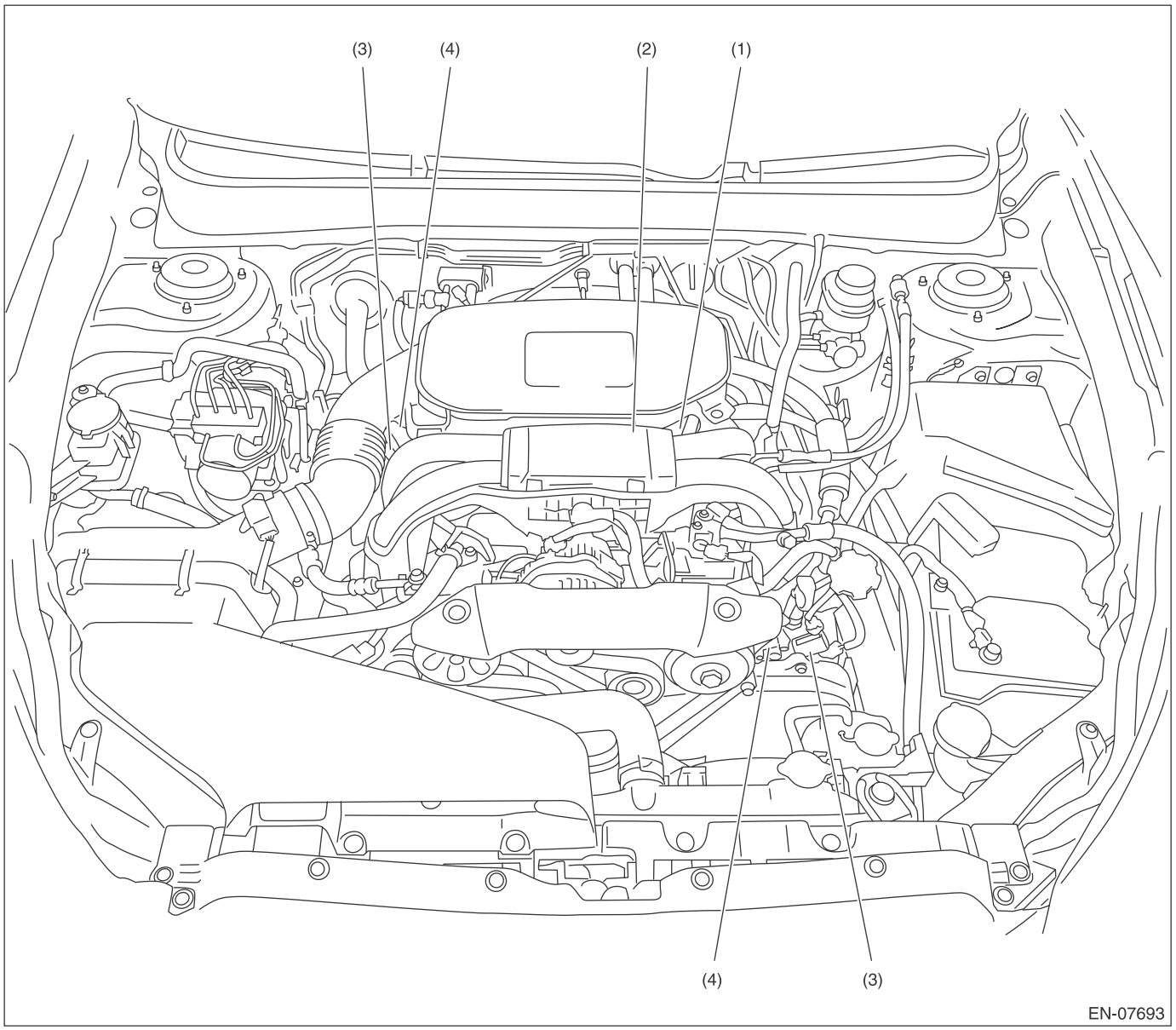

(1) Purge control solenoid valve
(2) EGR valve
(3) Oil switching solenoid valve
(4) Variable valve lift diagnosis oil pressure switch

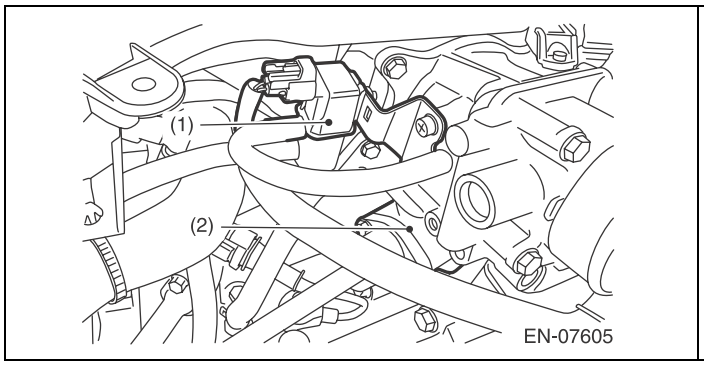

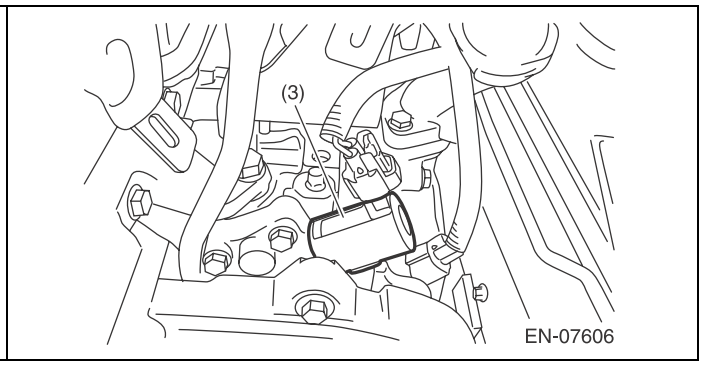

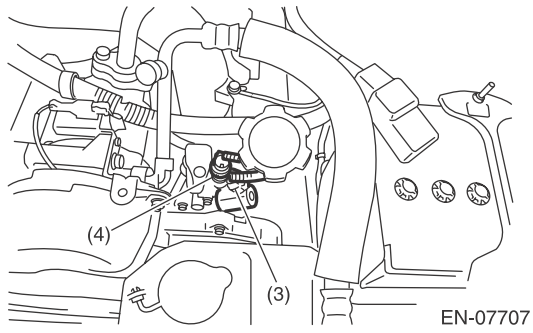
(4)
(3)
EN-07707

Electrical Component Location

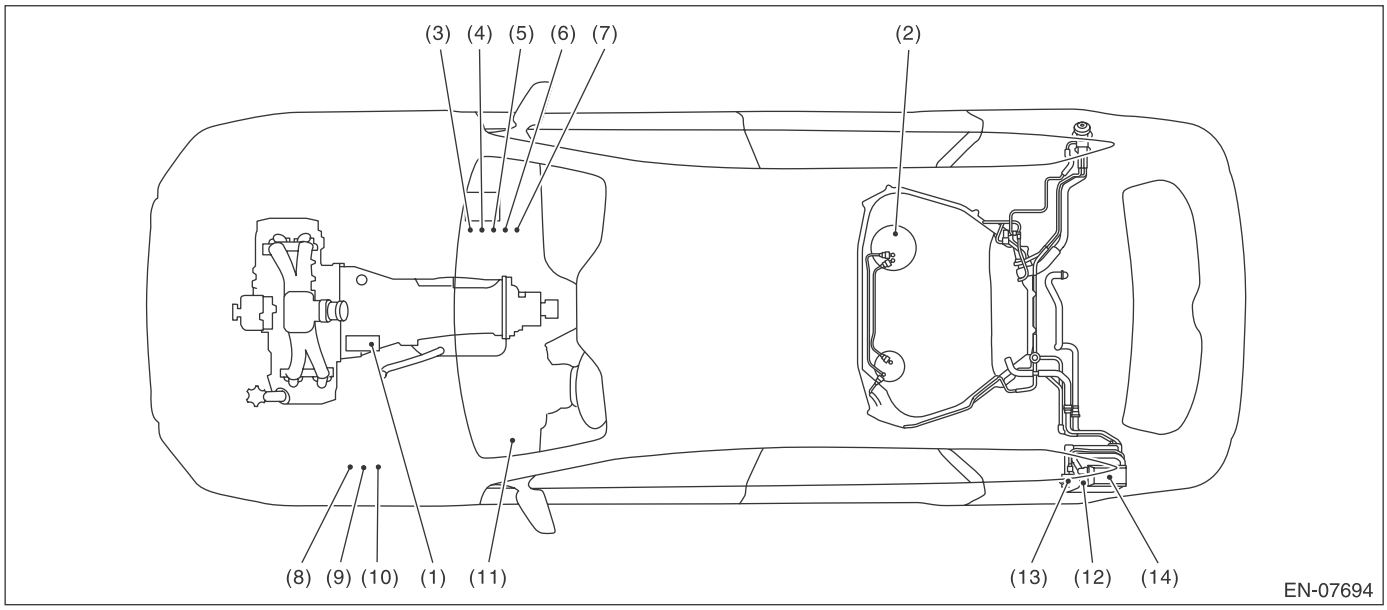

(1) Starter
(2) Fuel pump
(3) Main relay
(4) IG relay
(5) A/F, oxygen sensor relay
(6) Electronic throttle control relay
(7) Fuel pump relay
(8) Radiator main fan relay 1
(9) Radiator main fan relay 2
(10) Radiator sub fan relay
(11) Starter relay
(12) Canister
(13) Drain valve
(14) Drain filter

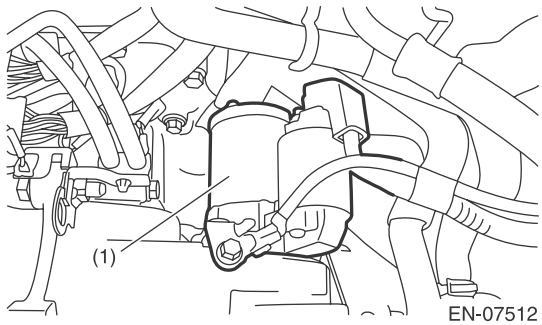

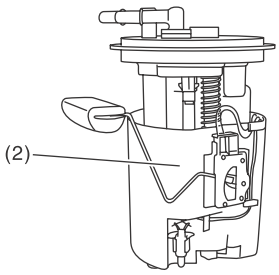

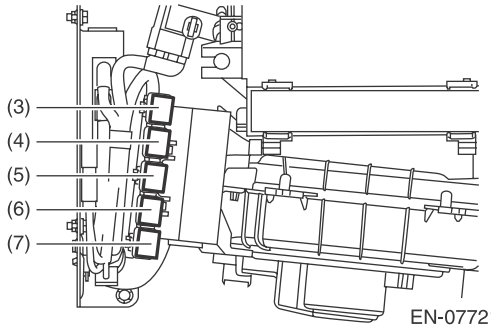

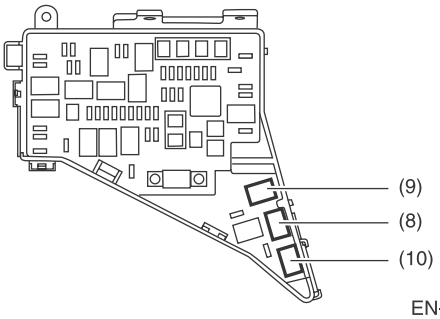

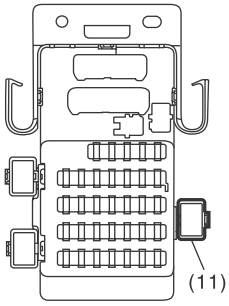

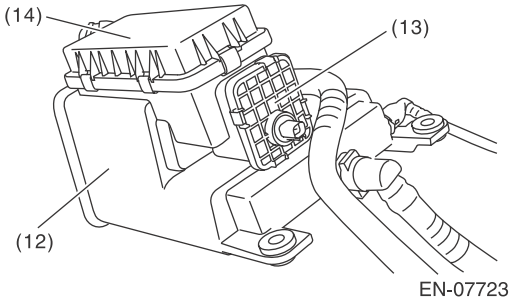

4. TRANSMISSION

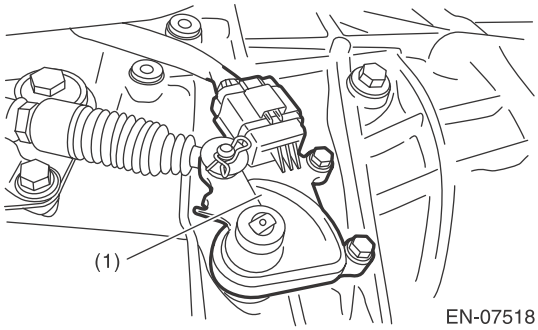

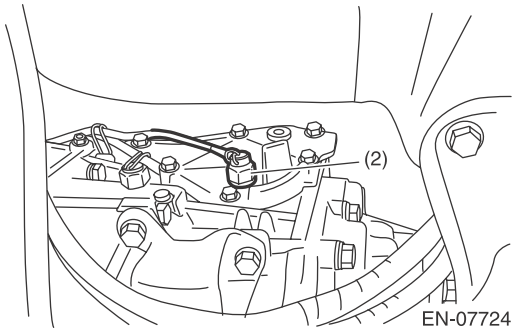

(1) Inhibitor switch (CVT model)
(2) Neutral position switch (MT model)

5. Engine Control Module (ECM) I/O Signal

A: ELECTRICAL SPECIFICATION

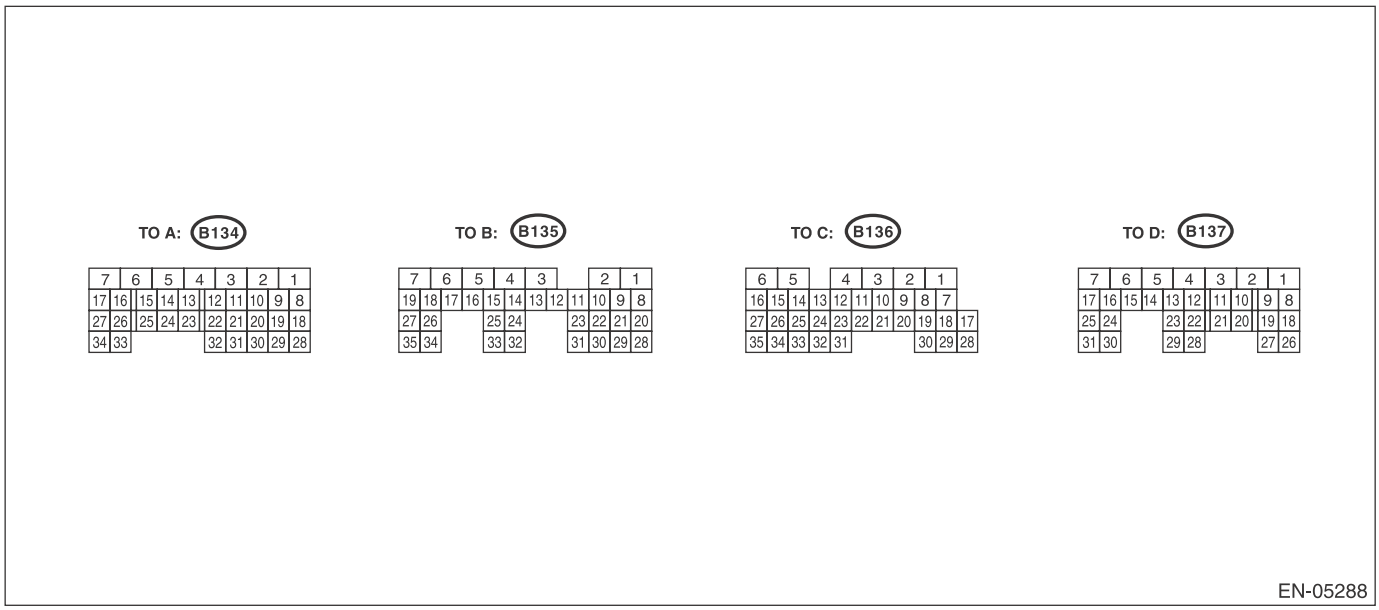

Description		Connector No.	Terminal No.	Signal (V)		Note
				Ignition SW ON (engine OFF)	Engine ON (idling)	
Crankshaft position sensor	Signal (+)	B137	17	0	–7 — +7	Waveform
	Signal (–)	B137	25	0	0	—
	Shield	B137	31	0	0	—
Camshaft position sensor	Signal (+)	B137	24	0	–7 — +7	Waveform
	Signal (–)	B137	30	0	0	—
	Shield	B137	31	0	0	—
Electronic throttle control	Main	B134	18	0.64 — 0.72 Fully open: Approx. 4.04	0.64 — 0.72 (After engine is warmed up.)	Fully closed: Approx. 0.6 Fully open: Approx. 4.04
	Sub	B134	28	1.51 — 1.58 Fully open: Approx. 4.232	1.51 — 1.58 (After engine is warmed up.)	Fully closed: Approx. 1.48 Fully open: Approx. 4.232
	Power supply	B134	19	5	5	—
	Ground (sensor)	B134	29	0	0	—
Electronic throttle control motor (+)		B134	2	Duty waveform	Duty waveform	Drive frequency: 500 Hz
Electronic throttle control motor (–)		B134	1	Duty waveform	Duty waveform	Drive frequency: 500 Hz
Electronic throttle control motor power supply		B135	7	10 — 13	12 — 14	—
Electronic throttle control motor relay		B135	17	ON: 0 OFF: 10 — 13	ON: 0 OFF: 12 — 14	When ignition switch is turned to ON: ON

Description		Connector No.	Terminal No.	Signal (V)		Note
				Ignition SW ON (engine OFF)	Engine ON (idling)	
Accelerator pedal position sensor	Main sensor signal	B135	23	Fully closed: 1.0 Fully opened: 3.5	Fully closed: 1.0 Fully opened: 3.5	—
	Main power supply	B135	21	5	5	—
	GND (Main sensor)	B135	29	0	0	—
	Sub sensor signal	B135	31	Fully closed: 1.0 Fully opened: 3.5	Fully closed: 1.0 Fully opened: 3.5	—
	Sub power supply	B135	22	5	5	—
	GND (Sub sensor)	B135	30	0	0	—
Rear oxygen sensor	Signal	B136	20	0	0 — 0.9	—
	Shield	B136	9	0	0	—
Front oxygen (A/F) sensor heater	Signal 1	B136	6	10 — 13	1 — 14	Duty waveform
	Signal 2	B136	5	10 — 13	1 — 14	Duty waveform
Rear oxygen sensor heater signal		B135	6	10 — 13	1 — 14	Duty waveform
Engine coolant temperature sensor		B137	22	1.0 — 1.4	1.0 — 1.4	After engine is warmed up.
Starter switch		B136	16	0	0	CVT model Cranking: 8 — 14 MT model Cranking with the clutch pedal pressed: 8 — 14
Starter relay control		B135	26	ON: 0.5 or less OFF: 10 — 13	ON: 0.5 or less OFF: 12 — 14	—
Ignition switch		B136	30	10 — 13	12 — 14	—
Neutral position switch		B136	35	ON: 0 OFF: 12±0.5		CVT model: Switch is ON when select lever is in “P” range or “N” range. MT model: Switch is ON when shift lever is in neutral.
Delivery (test) mode fuse		B136	34	10 — 13	13 — 14	When fuse is installed: 0
Knock sensor	Signal	B137	2	2.5	2.5	—
	Shield	B137	8	0	0	—
Back-up power supply		B136	2	10 — 13	12 — 14	Ignition switch “OFF”: 10 — 13
Control module power supply		B137	7	10 — 13	12 — 14	—
		B136	1	10 — 13	12 — 14	—
Ignition control	#1	B134	21	0	0 or 5	Waveform
	#2	B134	22	0	0 or 5	Waveform
	#3	B134	31	0	0 or 5	Waveform
	#4	B134	32	0	0 or 5	Waveform
Fuel injector	#1	B134	10	10 — 13	1 — 14	Waveform
	#2	B134	11	10 — 13	1 — 14	Waveform
	#3	B134	12	10 — 13	1 — 14	Waveform
	#4	B134	13	10 — 13	1 — 14	Waveform

Engine Control Module (ECM) I/O Signal

Description		Connector No.	Terminal No.	Signal (V)		Note
				Ignition SW ON (engine OFF)	Engine ON (idling)	
Fuel pump relay control		B136	33	ON: 0.5 or less OFF: 10 — 13	ON: 0.5 or less OFF: 12 — 14	—
Radiator fan relay 1 control		B135	12	ON: 0.5 or less OFF: 10 — 13	ON: 0.5 or less OFF: 12 — 14	—
Radiator fan relay 2 control		B135	11	ON: 0.5 or less OFF: 10 — 13	ON: 0.5 or less OFF: 12 — 14	—
Self-shutoff control		B135	13	0.5 or less	0.5 or less	—
Malfunction indicator light		B135	33	—	—	Light “ON”: 1 or less Light “OFF”: 10 — 14
Engine speed output		B135	15	—	0 — 13 or more	Waveform
Oil temperature sensor signal		B137	21	1.0 — 1.4	1.0 — 1.4	After engine is warmed up.
Purge control solenoid valve		B137	6	ON: 1 or less OFF: 10 — 13	ON: 1 or less OFF: 12 — 14	Duty waveform
EGR valve	Signal 1	B134	8	0 or 10 — 13	0 or 12 — 14	Waveform
	Signal 2	B134	9	0 or 10 — 13	0 or 12 — 14	Waveform
	Signal 3	B134	20	0 or 10 — 13	0 or 12 — 14	Waveform
	Signal 4	B134	30	0 or 10 — 13	0 or 12 — 14	Waveform
Power steering oil pressure switch		B137	28	ON: 1 or less OFF: 10 — 13	ON: 1 or less OFF: 12 — 14	—
Blower motor relay		B135	19	ON: 0 OFF: 10 — 13	ON: 0 OFF: 12 — 14	Manual A/C
Oil level switch		B136	26	0	0	Oil level LOW: 10 — 14
Oil switching solenoid valve RH	Signal (+)	B134	7	0	Duty waveform	Drive frequency: 300 Hz
	Signal (–)	B134	15	0	0	—
Oil switching solenoid valve LH	Signal (+)	B134	5	0	Duty waveform	Drive frequency: 300 Hz
	Signal (–)	B134	14	0	0	—
Variable valve lift diagnosis oil pressure switch RH		B137	14	0	0	—
Variable valve lift diagnosis oil pressure switch LH		B137	13	0	0	—
Front oxygen (A/F) sensor	Signal (+)	B136	19	—	2.7 — 2.9	—
	Signal (–)	B136	18	—	2.35 — 2.25	—
	Shield	B136	9	0	0	—
Manifold absolute pressure sensor		B137	20	3.4 — 3.8	1.4 — 1.8	—
Air flow sensor	Signal	B136	22	—	0.3 — 4.5	—
	Shield	B136	10	0	0	—
	Ground	B136	11	0	0	—
Intake air temperature sensor signal		B136	31	0.3 — 4.6	0.3 — 4.6	—
Immobilizer communication		B135	25	1 or less ←→ 4 or more	1 or less ←→ 4 or more	—
SSM communication line		B135	14	1 or less ←→ 4 or more	1 or less ←→ 4 or more	—
Sensor power supply		B134	19	5	5	—
		B135	22	5	5	—

Engine Control Module (ECM) I/O Signal

Description		Connector No.	Terminal No.	Signal (V)		Note
				Ignition SW ON (engine OFF)	Engine ON (idling)	
Ground	Sensor	B134	29	0	0	—
		B135	30	0	0	—
	Engine 1	B134	6	0	0	—
	Engine 2	B134	4	0	0	—
	Engine 3	B134	3	0	0	—
	Engine 4	B137	1	0	0	—
	Engine 5	B137	3	0	0	—
	Body	B136	4	0	0	—
Clutch switch		B135	9	When clutch pedal is depressed: 0 When clutch pedal is released: 10 — 13	When clutch pedal is depressed: 0 When clutch pedal is released: 12 — 14	—
Brake switch 1 (brake switch)		B136	15	When brake pedal is depressed: 0 When brake pedal is released: 10 — 13	When brake pedal is depressed: 0 When brake pedal is released: 12 — 14	—
Brake switch 2 (stop light switch)		B136	3	When brake pedal is depressed: 10 — 13 When brake pedal is released: 0	When brake pedal is depressed: 12 — 14 When brake pedal is released: 0	—
Cruise control main switch		B136	13	ON: 0 OFF: 5	ON: 0 OFF: 5	—
Cruise control command switch		B136	12	When operating nothing: 3.5 — 4.5 When operating RES/ACC: 2.5 — 3.5 When operating SET/COAST: 0.5 — 1.5 When operating CANCEL: 0 — 0.5	When operating nothing: 3.5 — 4.5 When operating RES/ACC: 2.5 — 3.5 When operating SET/COAST: 0.5 — 1.5 When operating CANCEL: 0 — 0.5	—
Fuel temperature sensor		B136	23	2.5 — 3.8	2.5 — 3.8	Outside temperature: 25°C (77°F)
Fuel tank pressure sensor		B136	21	2.3 — 2.7	2.3 — 2.7	Value after removing fuel filler cap and installing again
Drain valve		B135	4	ON: 1 or less OFF: 10 — 13	ON: 1 or less OFF: 12 — 14	—
CAN communication	(Hi)	B136	17	2.5 — 3.5	2.5 — 3.5	Waveform
	(Lo)	B136	28	1.5 — 2.5	1.5 — 2.5	Waveform

Input/output name:

- Crankshaft position sensor
- Camshaft position sensor

Measuring condition:

- After warming-up
- At idling

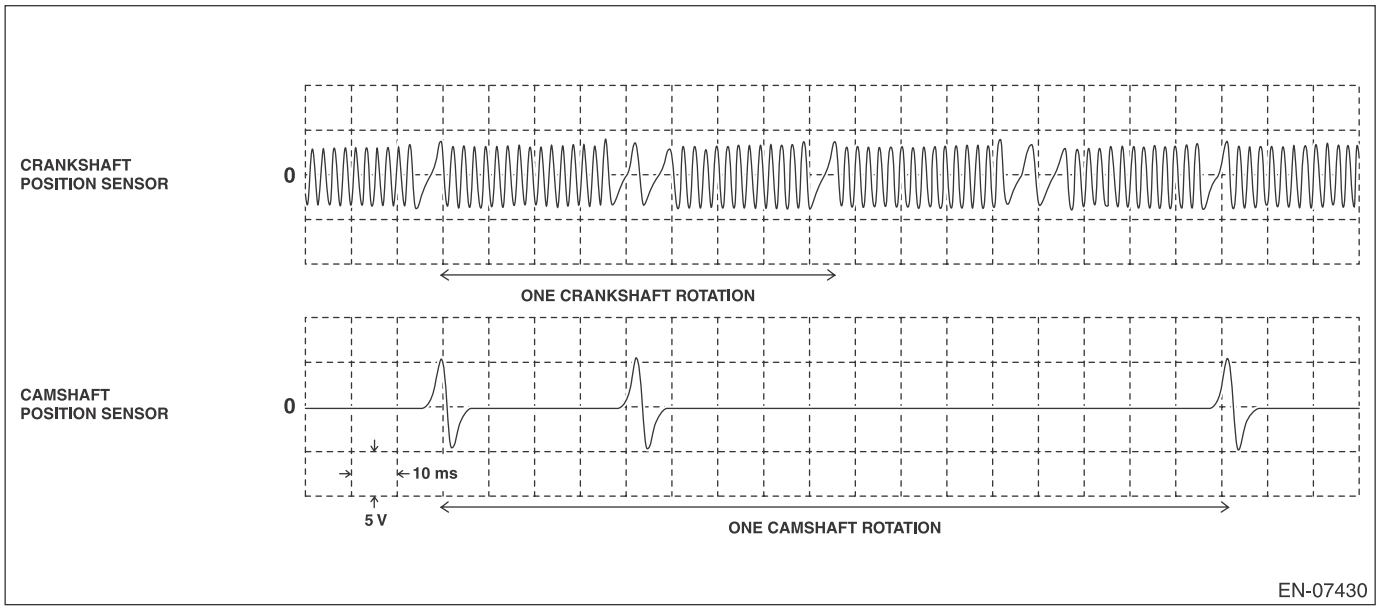

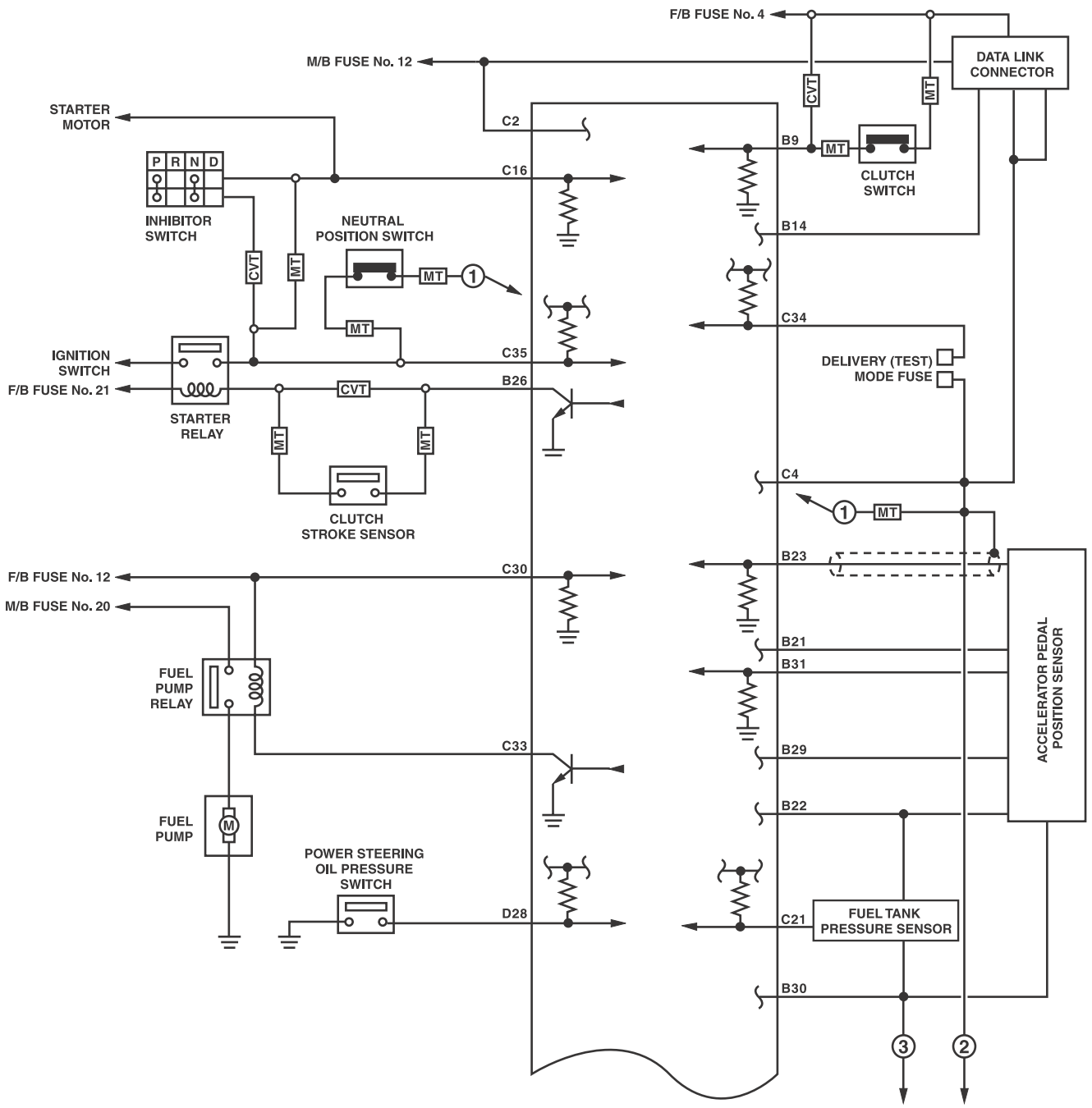
F/B FUSE No. 4
M/B FUSE No. 12
DATA LINK CONNECTOR
STARTER MOTOR
C2
B9
CVT
MT
CLUTCH SWITCH
P R N D
C16
INHIBITOR SWITCH
NEUTRAL POSITION SWITCH
B14
C34
IGNITION SWITCH
C35
DELIVERY (TEST) MODE FUSE
F/B FUSE No. 21
B26
STARTER RELAY
C4
CLUTCH STROKE SENSOR
F/B FUSE No. 12
C30
B23
M/B FUSE No. 20
B21
B31
FUEL PUMP RELAY
ACCELERATOR PEDAL POSITION SENSOR
C33
B29
B22
FUEL PUMP
POWER STEERING OIL PRESSURE SWITCH
D28
C21
FUEL TANK PRESSURE SENSOR
B30
EN-07695

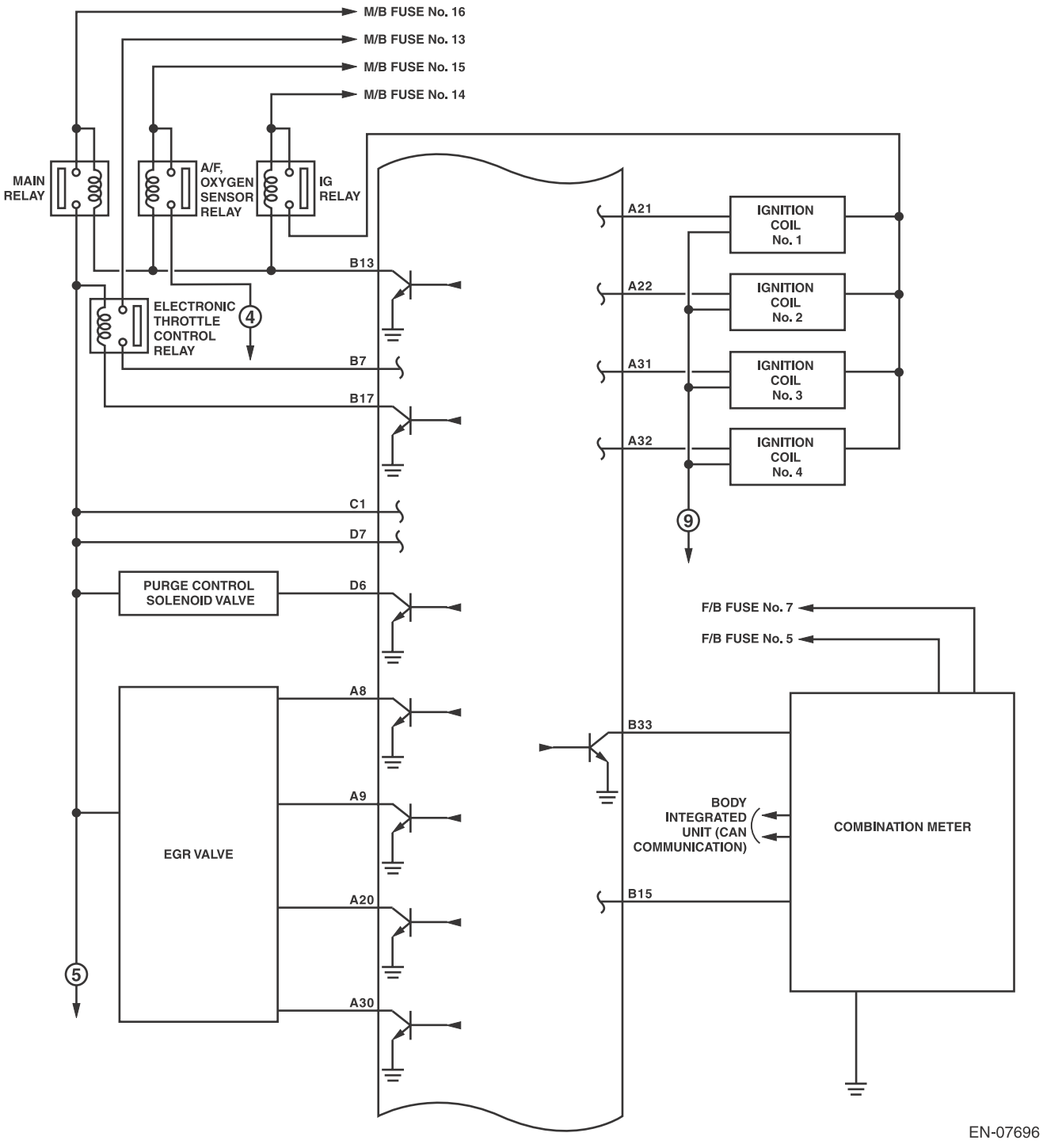
M/B FUSE No. 16
M/B FUSE No. 13
M/B FUSE No. 15
M/B FUSE No. 14
MAIN RELAY
A/F, OXYGEN SENSOR RELAY
IG RELAY
ELECTRONIC THROTTLE CONTROL RELAY
4
B13
B7
B17
C1
D7
PURGE CONTROL SOLENOID VALVE
D6
A8
A9
A20
A30
EGR VALVE
5
A21
A22
A31
A32
IGNITION COIL No. 1
IGNITION COIL No. 2
IGNITION COIL No. 3
IGNITION COIL No. 4
9
F/B FUSE No. 7
F/B FUSE No. 5
B33
BODY INTEGRATED UNIT (CAN COMMUNICATION)
B15
COMBINATION METER
EN-07696

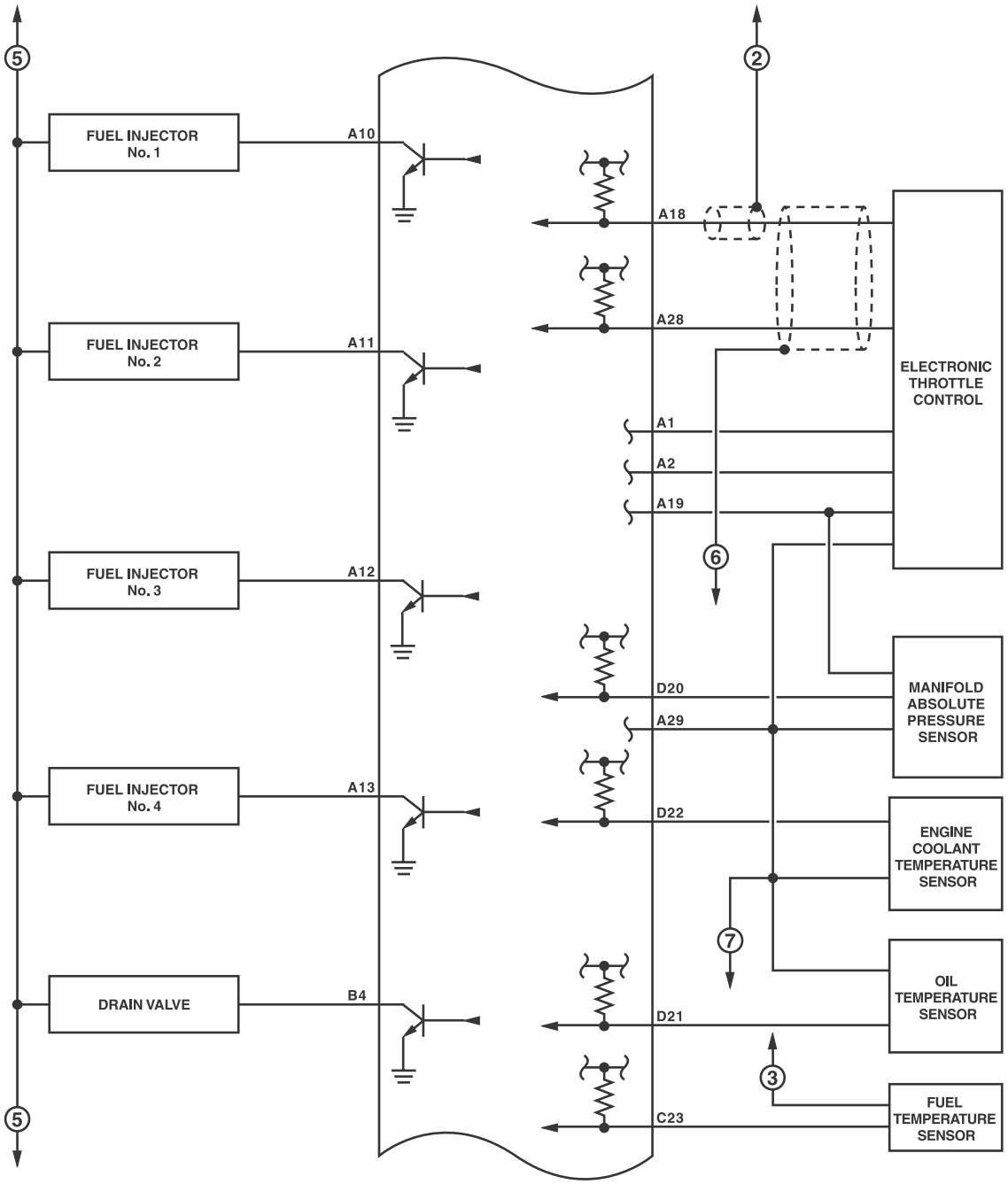
5
FUEL INJECTOR No. 1
A10
FUEL INJECTOR No. 2
A11
FUEL INJECTOR No. 3
A12
FUEL INJECTOR No. 4
A13
DRAIN VALVE
B4
5
2
A18
A28
A1
A2
A19
6
ELECTRONIC THROTTLE CONTROL
D20
A29
MANIFOLD ABSOLUTE PRESSURE SENSOR
D22
ENGINE COOLANT TEMPERATURE SENSOR
7
D21
OIL TEMPERATURE SENSOR
3
C23
FUEL TEMPERATURE SENSOR

EN-07697

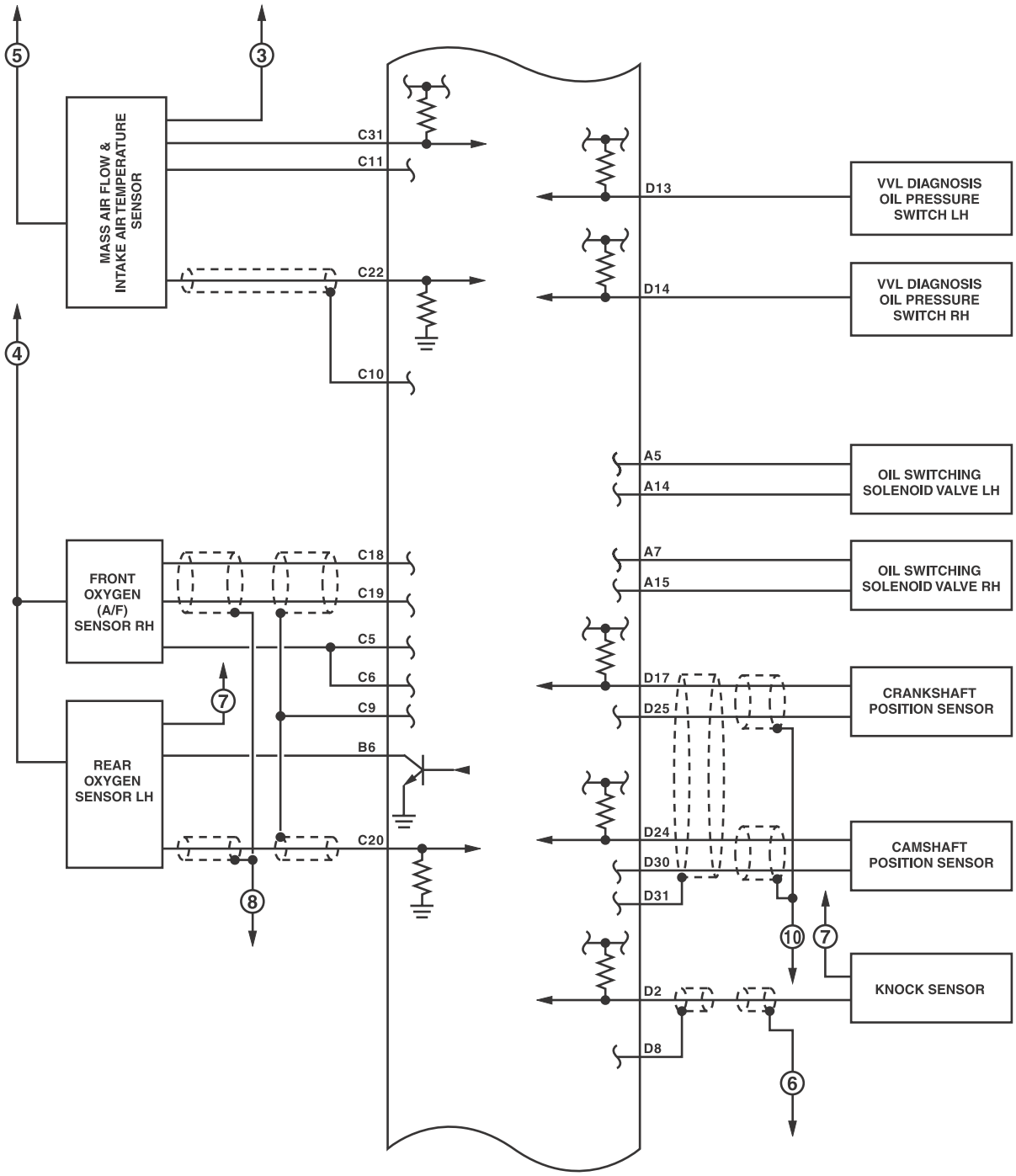
5
3
MASS AIR FLOW & INTAKE AIR TEMPERATURE SENSOR
C31
C11
C22
C10
4
FRONT OXYGEN (A/F) SENSOR RH
C18
C19
C5
C6
C9
7
REAR OXYGEN SENSOR LH
B6
C20
8
D13
VVL DIAGNOSIS OIL PRESSURE SWITCH LH
D14
VVL DIAGNOSIS OIL PRESSURE SWITCH RH
A5
A14
OIL SWITCHING SOLENOID VALVE LH
A7
A15
OIL SWITCHING SOLENOID VALVE RH
D17
D25
CRANKSHAFT POSITION SENSOR
D24
D30
D31
CAMSHAFT POSITION SENSOR
10
7
D2
KNOCK SENSOR
D8
6

EN-07698

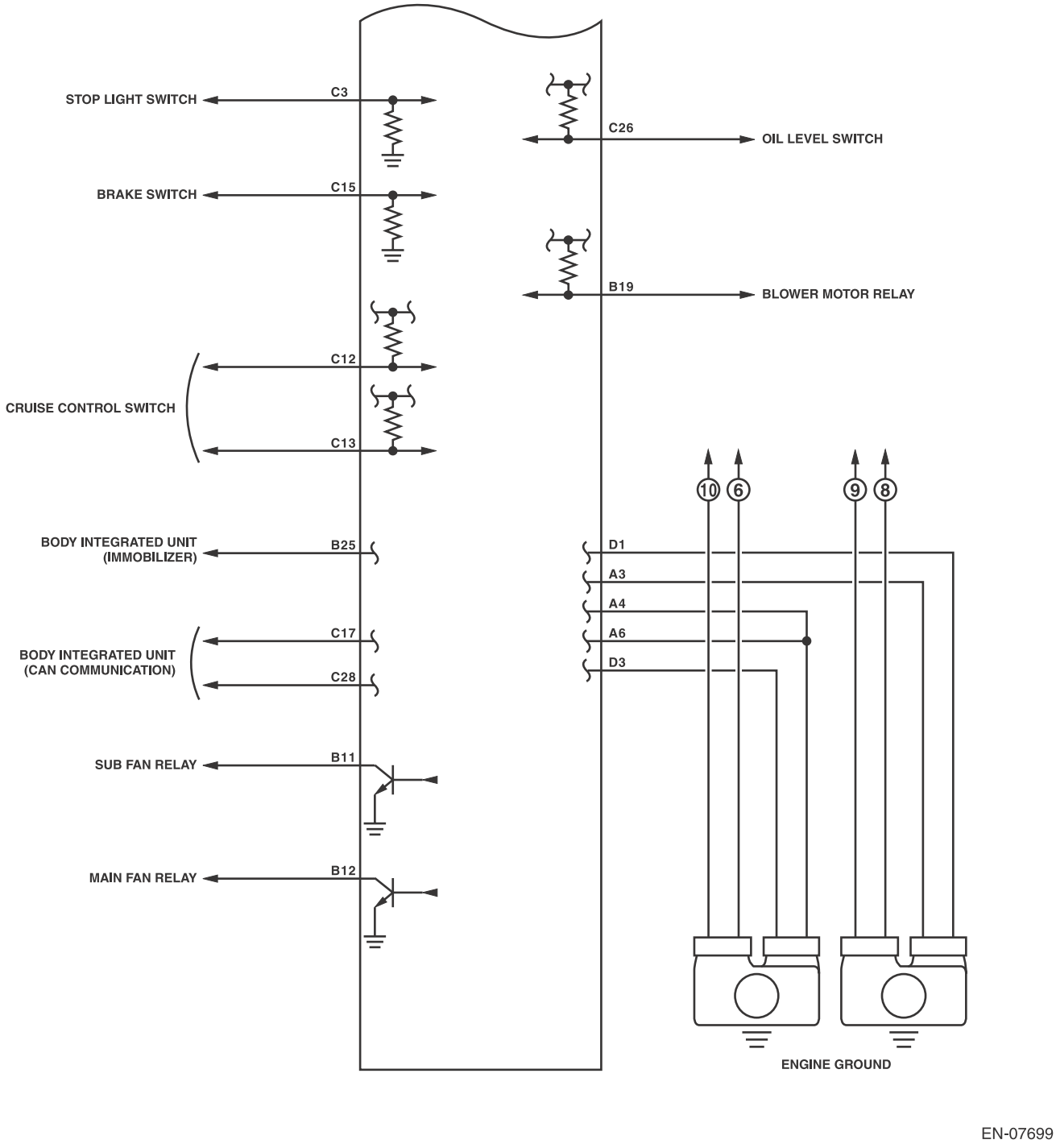
STOP LIGHT SWITCH
C3
BRAKE SWITCH
C15
CRUISE CONTROL SWITCH
C12
C13
BODY INTEGRATED UNIT (IMMOBILIZER)
B25
BODY INTEGRATED UNIT (CAN COMMUNICATION)
C17
C28
SUB FAN RELAY
B11
MAIN FAN RELAY
B12
C26
OIL LEVEL SWITCH
B19
BLOWER MOTOR RELAY
D1
A3
A4
A6
D3
10
6
9
8
ENGINE GROUND

EN-07699

6. Engine Condition Data

A: ELECTRICAL SPECIFICATION

Contents	Specification
Engine load	17.6 — 40.5 (%): Idling
	14.7 — 29.8 (%): 2,500 rpm racing

Measuring condition:
- After engine is warmed up.
- Set the select lever in “P” range or “N” range, or the shift lever in neutral.
- Turn the A/C to OFF.
- Turn all the accessory switches to OFF.

7. Data Link Connector

A: NOTE

This connector is used for Subaru Select Monitor.

CAUTION:
Do not connect any scan tools other than Subaru Select Monitor or general scan tool because the circuit for Subaru Select Monitor may be damaged.

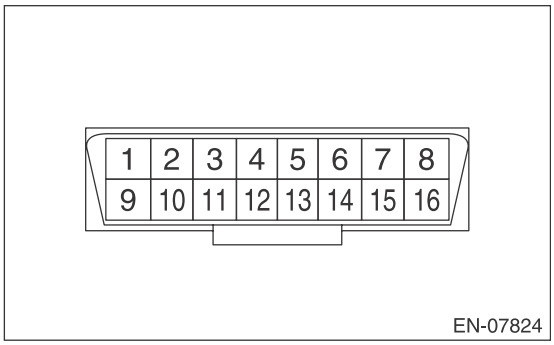

Terminal No.	Contents	Terminal No.	Contents
1	Empty	9	Empty
2	Empty	10	Empty
3	Empty	11	Empty
4	Ground	12	Empty
5	Ground	13	Empty
6	CAN communication (Hi)	14	CAN communication (Lo)
7	Subaru Select Monitor signal	15	Empty
8	Empty	16	Power supply

8. General Scan Tool

A: OPERATION

1. HOW TO USE GENERAL SCAN TOOL

1) Prepare a scan tool (general scan tool) required by SAE J1978.
2) Connect the general scan tool to the data link connector located in the lower portion of the instrument panel (on the driver's side).

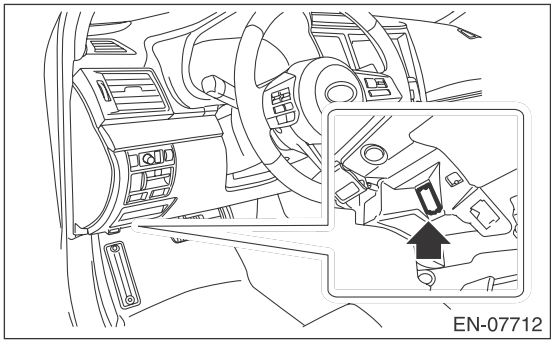

3) Using the general scan tool, call up each data. General scan tool functions consist of:
   (1) MODE $01: Current powertrain diagnostic data
   (2) MODE $02: Powertrain freeze frame data
   (3) MODE $03: Emission-related powertrain DTC
   (4) MODE $04: Clear/Reset emission-related diagnostic information
   (5) MODE $06: Request on-board monitoring test results for intermittently monitored systems
   (6) MODE $07: Request on-board monitoring test results for continuously monitored systems
   (7) MODE $09: Request vehicle information

Read out the data according to repair procedures. (For detailed operation procedure, refer to the general scan tool operation manual.)

NOTE:
For details concerning DTC, refer to "List of Diagnostic Trouble Code (DTC)". <Ref. to EN(H4SO)(diag)-79, List of Diagnostic Trouble Code (DTC).>

2. MODE $01: (CURRENT POWERTRAIN DIAGNOSTIC DATA)

Refer to data denoting the current operating condition of analog input/output, digital input/output or the powertrain system.
A list of the support data and PID (Parameter Identification) codes are shown in the following table.

PID	Data	Unit of measure
$01	Number of emission-related powertrain DTC, and malfunction indicator light status and diagnosis support information	—
$03	Fuel system control status	—
$04	Calculated engine load value	%
$05	Engine coolant temperature	°C
$06	Short term fuel trim	%
$07	Long term fuel trim	%
$0B	Intake manifold absolute pressure	kPa
$0C	Engine speed	rpm
$0D	Vehicle speed	MPH
$0E	Ignition timing advance	°
$0F	Intake air temperature	°C
$10	Intake air amount	g/s
$11	Throttle valve opening angle	%
$13	Air fuel ratio sensor	—
$15	Oxygen sensor output voltage and short term fuel trim associated with oxygen sensor (Bank 1 Sensor 2)	V and %
$1C	Supporting OBD system	—
$1F	Elapsed time after starting the engine	sec
$21	Driving distance after the malfunction indicator light illuminates	miles
$24	A/F value and A/F sensor output voltage (Bank 1 Sensor 1)	– and V
$2C	Target EGR	%
$2D	EGR deviation	%
$2E	Evaporative purge	%
$2F	Fuel level	%
$30	Number of warm ups after DTC clear	—
$31	Driving distance after DTC clear	miles
$32	Fuel tank pressure	Pa
$33	Atmospheric pressure	kPa
$34	A/F value and A/F sensor current (Bank 1 Sensor 1)	– and mA
$3C	Catalytic temperature #1	°C
$41	Diagnosis monitoring per drive cycle	—
$42	ECM power voltage	V
$43	Absolute load	%
$44	A/F target lambda	—
$45	Relative throttle opening angle	%
$46	Ambient temperature	°C
$47	Absolute throttle opening angle 2	%
$49	Absolute acceleration opening angle 1	%
$4A	Absolute acceleration opening angle 2	%
$4C	Target throttle opening angle	%
$4D	Engine operating time while malfunction indicator light is illuminating	min
$4E	Elapsed time after DTC clear	min
$51	Fuel used	—
$5A	Relative acceleration opening angle	%
$65	Neutral status	—

NOTE:
Refer to general scan tool manufacturer's instruction manual to access generic OBD-II PIDs (MODE $01).

3. MODE $02 (POWERTRAIN FREEZE FRAME DATA)

Refer to data denoting the operating condition when trouble is sensed by the on-board diagnosis system. A list of the support data and PID (Parameter Identification) codes are shown in the following table.

PID	Data	Unit of measure
$02	DTC that caused the freeze frame data storage required by CARB	—
$03	Fuel system control status	—
$04	Calculated engine load value	%
$05	Engine coolant temperature	°C
$06	Short term fuel trim (Bank 1 Sensor 1)	%
$07	Long term fuel trim (Bank 1 Sensor 1)	%
$0B	Intake manifold absolute pressure	kPa
$0C	Engine speed	rpm
$0D	Vehicle speed	MPH
$0E	Ignition timing advance	°
$0F	Intake air temperature	°C
$10	Intake air amount	g/s
$11	Throttle valve opening angle	%
$13	Air fuel ratio sensor	—
$15	Oxygen sensor output voltage and short term fuel trim associated with oxygen sensor (Bank 1 Sensor 2)	V and %
$1C	Supporting OBD system	—
$1F	Elapsed time after starting the engine	sec
$2C	Target EGR	%
$2D	EGR deviation	%
$2E	Evaporative purge	%
$2F	Fuel level	%
$32	Fuel tank pressure	Pa
$33	Atmospheric pressure	kPa
$42	ECM power voltage	V
$43	Absolute load	%
$44	A/F target lambda	—
$45	Relative throttle opening angle	%
$46	Ambient temperature	°C
$47	Absolute throttle opening angle 2	%
$49	Absolute acceleration opening angle 1	%
$4A	Absolute acceleration opening angle 2	%
$4C	Target throttle opening angle	%
$65	Neutral status	—

NOTE:
Refer to general scan tool manufacturer's instruction manual to access freeze frame data (MODE $02).

4. MODE $03 (EMISSION-RELATED POWERTRAIN DTC)

Refer to "List of Diagnostic Trouble Code (DTC)" for information about data denoting emission-related powertrain DTC. <Ref. to EN(H4SO)(diag)-79, List of Diagnostic Trouble Code (DTC).>

5. MODE $04 (CLEAR/RESET EMISSION-RELATED DIAGNOSTIC INFORMATION)

Refer to the mode used to clear or reset emission-related diagnostic information (OBD-II trouble diagnostic information).

NOTE:
- Refer to general scan tool manufacturer's instruction manual to clear the emission-related diagnostic information (MODE $04).
- Initial diagnosis of electronic throttle control is performed after memory clearance. Wait for 10 seconds or more after turning the ignition switch to ON, and then start the engine.

6. MODE $06

Refer to test value of troubleshooting and data of test limit indicated on the support data bit sequence table. A list of the support data is shown in the following table.

OBDMID	TID	SID	Diagnostic item
$01	$81	$0A	A/F sensor continuity failure (Bank 1 Sensor 1)
	$82	$8D	
	$83	$14	
	$84	$1E	A/F sensor range failure (Bank 1 Sensor 1)
	$85	$1E	
	$86	$20	A/F sensor response failure (Bank 1 Sensor 1)
$02	$87	$0B	Oxygen sensor circuit failure (Bank 1 Sensor 2)
	$88	$0B	
	$07	$0B	Oxygen sensor drop failure (Bank 1 Sensor 2)
	$08	$0B	
	$A5	$0B	
	$05	$10	Oxygen sensor response failure (Bank 1 Sensor 2)
	$06	$10	
$21	$89	$20	Catalyst deterioration diagnosis (Bank 1)
$31	$8A	$FD	EGR system diagnosis
$39	$93	$FE	Evaporative emission control system (Cap off)
$3B	$94	$FE	Evaporative emission control system (0.04 inch leak)
	$95	$FE	
	$A6	$FE	
$3C	$96	$FE	Evaporative emission control system (0.02 inch leak)
	$97	$FE	
$3D	$98	$FE	Evaporative emission control system (Purge flow)
$41	$99	$24	A/F sensor heater failure (Bank 1 Sensor 1)
	$9A	$24	
	$9B	$14	A/F sensor heater characteristics failure (Bank 1 Sensor 1)
$42	$9C	$24	Oxygen sensor heater failure (Bank 1 Sensor 2)
	$9D	$24	
$A1	$0B	$24	Misfire monitoring (All cylinders)
	$0C	$24	
$A2	$0B	$24	Misfire monitoring (#1 cylinder)
	$0C	$24	
$A3	$0B	$24	Misfire monitoring (#2 cylinder)
	$0C	$24	
$A4	$0B	$24	Misfire monitoring (#3 cylinder)
	$0C	$24	
$A5	$0B	$24	Misfire monitoring (#4 cylinder)
	$0C	$24	

7. MODE $07

Refer to the data of DTC (pending code) for troubleshooting result about emission in the first time.

8. MODE $09

Refer to data of vehicle specification (V.I.N., calibration ID, diagnosis frequency etc.).

9. Subaru Select Monitor

A: OPERATION

1. HOW TO USE THE SUBARU SELECT MONITOR

NOTE:
For detailed operation procedures, refer to “PC application help for Subaru Select Monitor”.

2. READ CURRENT DATA FOR ENGINE (NORMAL MODE)

NOTE:
- For detailed operation procedures, refer to “PC application help for Subaru Select Monitor”.
- A list of the support data is shown in the following table.

Contents	Display	Unit of measure	Note (at idling)
Engine load	Engine Load	%	21.0%
Engine coolant temperature signal	Coolant Temp.	°C or °F	85°C or 185°F or more (after warm-up)
A/F correction #1	A/F Correction #1	%	–0.8%
A/F learning #1	A/F Learning #1	%	0.0%
Intake manifold absolute pressure	Mani. Absolute Pressure	mmHg, kPa, inHg or psig	200 — 300 mmHg, 26.7 — 40 kPa, 7.8 — 11.8 inHg or 3.8 — 5.8 psig
Engine speed signal	Engine Speed	rpm	700 rpm (Agree with the tachometer indication)
Meter vehicle speed signal	Vehicle Speed	km/h or MPH	0 km/h or 0 MPH (at parking)
Ignition timing signal	Ignition Timing	deg	14 — 16 deg
Intake air temperature signal	Intake Air Temp.	°C or °F	(Ambient air temperature)
Intake air amount	Mass Air Flow	g/s or lb/m	2.5 g/s or 0.33 lb/m
Throttle opening angle signal	Throttle Opening Angle	%	2.0%
Rear oxygen sensor voltage	Rear O2 Sensor	V	0.1 — 0.7 V
Battery voltage	Battery Voltage	V	12 — 14 V
Mass air flow voltage	Air Flow Sensor Voltage	V	1.26 V
Injection 1 pulse width	Fuel Injection #1 Pulse	ms	2.82 ms
Atmospheric pressure signal	Atmosphere Pressure	mmHg, kPa, inHg or psig	(Atmospheric pressure)
Intake manifold relative pressure	Mani. Relative Pressure	mmHg, kPa, inHg or psig	(Air intake absolute pressure – Atmospheric pressure)
Learned ignition timing	Learned Ignition Timing	deg	0 deg
Acceleration opening angle signal	Accel. Opening Angle	%	0.0%
Fuel temperature signal	Fuel Temp.	°C or °F	+20°C or +68°F
Purge control solenoid duty ratio	CPC Valve Duty Ratio	%	0 — 3%
Number of EGR steps	No. of EGR steps	STEP	0 STEP
A/F sensor current value 1	A/F Sensor #1 Current	mA	–0.2 — 0.2 mA
A/F sensor resistance value 1	A/F Sensor #1 Resistance	Ω	32 Ω
A/F sensor output lambda 1	A/F Sensor #1	—	1.0
A/F correction #3	A/F Correction #3	%	0.3%
A/F learning #3	A/F Learning #3	%	0.00%
Throttle motor duty	Throttle Motor Duty	%	–15%
Throttle motor voltage	Throttle Motor Voltage	V	(Battery voltage)
Sub throttle sensor voltage	Sub-Throttle Sensor	V	1.52 V
Main throttle sensor voltage	Main-Throttle Sensor	V	0.66 V

Contents	Display	Unit of measure	Note (at idling)
Sub accelerator sensor voltage	Sub-Accelerator Sensor	V	0.68 V
Main acceleration sensor voltage	Main-Accelerator Sensor	V	0.68 V
Memory vehicle speed	Memorized Cruise Speed	km/h or MPH	0 km/h or 0 MPH
Fuel level sensor signal	Fuel level resistance	Ω	2 — 96 Ω
Engine oil temperature	Oil Temperature	°C	≥ 85°C (after warm-up)
Oil switching solenoid valve duty RH	OSV Duty R	%	16.9%
Oil switching solenoid valve duty LH	OSV Duty L	%	16.9%
Oil switching solenoid valve current RH	OSV Current R	mA	192 mA
Oil switching solenoid valve current LH	OSV Current L	mA	192 mA
Variable valve lift lift mode	VVL Lift Mode	—	1
#1 cylinder roughness monitor	Roughness Monitor #1	—	0
#2 cylinder roughness monitor	Roughness Monitor #2	—	0
#3 cylinder roughness monitor	Roughness Monitor #3	—	0
#4 cylinder roughness monitor	Roughness Monitor #4	—	0
Knock sensor correction	Knocking Correction	deg	0.0 deg
Fuel tank pressure signal	Fuel Tank Pressure	mmHg, kPa, inHg or psig	+7.7 mmHg, +1.1 kPa, +0.31 inHg or +0.15 psig
AT vehicle ID signal	AT Vehicle ID Signal	—	ON/OFF
Delivery (test) mode terminal	Test Mode Signal	—	OFF
D-check require Flag	D-check Require Flag	—	OFF
Delivery (test) mode terminal	Delivery Mode Connector (Test Mode Connector)	—	OFF
Neutral position switch signal	Neutral Position Switch	—	ON
Soft idle switch signal	Idle Switch Signal	—	ON
Ignition switch signal	Ignition Switch	—	ON
Power steering switch signal	P/S Switch Signal	—	OFF (when OFF)
Air conditioning switch signal	A/C Switch	—	OFF (when OFF)
Starter switch signal	Starter Switch	—	OFF
Rear oxygen monitor	Rear O2 Rich Signal	—	Rich/Lean
Knocking signal	Knocking Signal	—	OFF
Crankshaft position sensor signal	Crankshaft Position Sig.	—	ON
Camshaft position sensor signal	Camshaft Position Sig.	—	ON
Rear defogger switch signal	Rear Defogger SW	—	OFF (when OFF)
Blower fan switch signal	Blower Fan SW	—	OFF (when OFF)
Light switch signal	Light Switch	—	OFF (when OFF)
Radiator fan relay 1 signal	Radiator Fan Relay #1	—	OFF (when OFF)
Radiator fan relay 2 signal	Radiator Fan Relay #2	—	OFF (when OFF)
Fuel pump relay signal	Fuel Pump Relay	—	ON output
Drain valve signal	Vent. Solenoid Valve	—	OFF output
Variable valve lift diagnosis oil pressure switch signal 1	Eng. Oil Press. SW 1	—	ON
Variable valve lift diagnosis oil pressure switch signal 2	Eng. Oil Press. SW 2	—	ON
AT coordinate retard angle demand signal	Retard Signal from AT	—	OFF
AT coordinate fuel cut demand signal	Fuel Cut signal from AT	—	OFF
Vehicle dynamics control (VDC) torque down prohibition output	Ban of Torque Down	—	ON
Vehicle dynamics control (VDC) torque down demand	Request Torque Down VDC	—	OFF
AT coordinate permission signal	Torque permission signal	—	Allowed (prohibited on MT vehicles)

Contents	Display	Unit of measure	Note (at idling)
Electronic throttle control motor relay signal	ETC Motor Relay	—	ON
Clutch switch signal	Clutch Switch	—	OFF (when OFF)
Stop light switch signal	Stop Light Switch	—	OFF (when OFF)
SET/COAST switch signal	SET/COAST Switch	—	OFF (when OFF)
RES/ACC switch signal	RESUME/ACCEL Switch	—	OFF (when OFF)
Brake switch signal	Brake Switch	—	OFF (when OFF)
Main switch signal	Main Switch	—	OFF (when OFF)
Body integrated unit data reception	Body Int. Unit Data	—	ON
Body integrated unit counter update	Body Int. Unit Count	—	ON
Cruise control cancel switch signal	CC Cancel SW	—	OFF (when OFF)
Malfunction indicator light signal	MIL On Flag	—	OFF (when unlit)
Oil level switch	Oil level switch	—	HIGH level

3. READ CURRENT DATA FOR ENGINE (OBD MODE)

NOTE:
- For detailed operation procedures, refer to “PC application help for Subaru Select Monitor”.
- A list of the support data is shown in the following table.

Contents	Display	Referential value (at idling)	Unit of measure
Number of diagnosis code	Number of Diag. Code:	0	—
Condition of malfunction indicator light	MI(MIL)	OFF	—
Monitoring test of misfire	Misfire monitoring (Supp)	YES	—
Monitoring test of misfire	Misfire monitoring (Rdy)	YES	—
Monitoring test of fuel system	Fuel system monitoring (Supp)	YES	—
Monitoring test of fuel system	Fuel system monitoring (Rdy)	YES	—
Monitoring test of comprehensive component	Component monitoring (Supp)	YES	—
Monitoring test of comprehensive component	Component monitoring (Rdy)	YES	—
Test of catalyst	Catalyst Diagnosis (Supp)	YES	—
Test of catalyst	Catalyst Diagnosis (Rdy)	NO	—
Test of heating-type catalyst	Heated catalyst (Supp)	NO	—
Test of heating-type catalyst	Heated catalyst (Rdy)	N/A	—
Test of evaporative emission purge control system	Evaporative purge system (Supp)	YES	—
Test of evaporative emission purge control system	Evaporative purge system (Rdy)	NO	—
Secondary air system test	Secondary air system (Supp)	NO	—
Secondary air system test	Secondary air system (Rdy)	N/A	—
Test of air conditioning system refrigerant	A/C system refrigerant (Supp)	NO	—
Test of air conditioning system refrigerant	A/C system refrigerant (Rdy)	N/A	—
Test of oxygen sensor	Oxygen sensor (Supp)	YES	—
Test of oxygen sensor	Oxygen sensor (Rdy)	NO	—
Test of oxygen sensor heater	O2 Heater Diagnosis (Supp)	YES	—
Test of oxygen sensor heater	O2 Heater Diagnosis (Rdy)	NO	—
Test of EGR system	EGR system (Supp)	YES	—
Test of EGR system	EGR system (Rdy)	NO	—
Air fuel ratio control system for bank 1	Fuel system for Bank 1	CL_normal	—
Engine load data	Calculated load value	23.0	%
Engine coolant temperature signal	Coolant Temp.	92	°C
Short term fuel trim by front oxygen (A/F) sensor (Bank 1)	Short term fuel trim B1	–0.8	%
Long term fuel trim by front oxygen (A/F) sensor (Bank 1)	Long term fuel trim B1	0.0	%
Intake manifold absolute pressure signal	Mani. Absolute Pressure	28	kPa
Engine speed signal	Engine Speed	700	rpm
Vehicle speed signal	Vehicle Speed	0	km/h
#1 Cylinder ignition timing	Ignition timing adv. #1	16.0	°
Intake air temperature signal	Intake Air Temp.	36	°C
Intake air amount	Mass Air Flow	2.7	g/s

Contents	Display	Referential value (at idling)	Unit of measure
Throttle position signal	Throttle Opening Angle	13	%
Oxygen sensor (Bank 1 Sensor 2)	Oxygen sensor #12	0.7	V
A/F correction (Bank 1 Sensor 2)	Short term fuel trim #12	0.0	%
On-board diagnostic system	OBD System	OBD/OBD2	—
Front oxygen (A/F) sensor (Bank 1 Sensor 1)	Oxygen sensor #11	Support	—
Oxygen sensor (Bank 1 Sensor 2)	Oxygen sensor #12	Support	—
Elapsed time after engine start	Time Since Engine Start	—	sec
Travel distance after the malfunction indicator light illuminates	Lighted MI lamp history	—	km
A/F lambda signal (Bank 1 Sensor 1)	A/F Sensor #11	1.001	—
A/F sensor output signal (Bank 1 Sensor 1)	A/F Sensor #11	2.79	V
Target EGR	Commanded EGR	—	%
EGR deviation	EGR Error	—	%
Evaporative purge	Commanded Evap Purge	0	%
Fuel level signal	Fuel Level	—	%
Number of warm ups after DTC clear	Number of warm-ups	—	—
Travel distance after DTC clear	Meter since DTC cleared	—	km
Fuel tank pressure signal	Fuel Tank Pressure	–32.00	Pa
Atmospheric pressure signal	Atmosphere Pressure	Atmospheric pressure	kPa
A/F lambda signal (Bank 1 Sensor 1)	A/F Sensor #11	1.001	—
A/F sensor current (Bank 1 Sensor 1)	A/F Sensor #11	0.00	mA
Catalyst temperature #1	Catalyst Temperature #11	—	°C
Monitoring test of misfire	Misfire monitoring (Enable)	YES	—
Monitoring test of misfire	Misfire monitoring (Comp)	NO	—
Monitoring test of fuel system	Fuel system monitoring (Enable)	YES	—
Monitoring test of fuel system	Fuel system monitoring (Comp)	NO	—
Monitoring test of comprehensive component	Component monitoring (Enable)	YES	—
Monitoring test of comprehensive component	Component monitoring (Comp)	NO	—
Test of catalyst	Catalyst Diagnosis (Enable)	YES	—
Test of catalyst	Catalyst Diagnosis (Comp)	NO	—
Test of heating-type catalyst	Heated catalyst (Enable)	N/A	—
Test of heating-type catalyst	Heated catalyst (Comp)	N/A	—
Test of evaporative emission purge control system	Evaporative purge system (Enable)	YES	—
Test of evaporative emission purge control system	Evaporative purge system (Comp)	NO	—
Secondary air system test	Secondary air system (Enable)	N/A	—
Secondary air system test	Secondary air system (Comp)	N/A	—
Test of air conditioning system refrigerant	A/C system refrigerant (Enable)	N/A	—
Test of air conditioning system refrigerant	A/C system refrigerant (Comp)	N/A	—
Test of oxygen sensor	Oxygen sensor (Enable)	YES	—
Test of oxygen sensor	Oxygen sensor (Comp)	NO	—

Contents	Display	Referential value (at idling)	Unit of measure
Test of oxygen sensor heater	O2 Heater Diagnosis (Enable)	YES	—
Test of oxygen sensor heater	O2 Heater Diagnosis (Comp)	NO	—
Test of EGR system	EGR system (Enable)	YES	—
Test of EGR system	EGR system (Comp)	NO	—
ECM power supply voltage	Control module voltage	13.789	V
Absolute load	Absolute Load Value	22	%
A/F target lambda	Target Equivalence Ratio	0.976	—
Relative throttle opening angle	Relative Throttle Pos.	2	%
Ambient temperature	Ambient Temperature	Ambient air temperature	°C
Absolute throttle opening angle 2	Absolute Throttle Pos.#2	32	%
Absolute accelerator opening angle 1	Accelerator Pedal Pos.#1	13	%
Absolute accelerator opening angle 2	Accelerator Pedal Pos.#2	13	%
Target throttle opening angle	Target Throt. Act. Cont.	0	%
Engine operating time while malfunction indicator light lit	Time while MIL lighted	—	min
Elapsed time after DTC clear	Time since DTC cleared	—	min
Type of fuel	Type of fuel	GAS	—
Relative acceleration opening angle	Relative Accelera. Pos.	0	%
Neutral condition	AT drive status/MT gear status	NEUT	—

4. READ FREEZE FRAME DATA FOR ENGINE (OBD MODE)

NOTE:
- For detailed operation procedures, refer to “PC application help for Subaru Select Monitor”.
- A list of the support data is shown in the following table.

Description	Display	Unit of measure
DTCs of freeze frame data	Freeze frame data	—
Air fuel ratio control system for bank 1	Fuel system for Bank 1	—
Engine load data	Calculated load value	%
Engine coolant temperature signal	Coolant Temp.	°C or °F
Short term fuel trim by front oxygen (A/F) sensor	Short term fuel trim B1	%
Long term fuel trim by front oxygen (A/F) sensor	Long term fuel trim B1	%
Intake manifold absolute pressure signal	Mani. Absolute Pressure	mmHg, kPa, inHg or psig
Engine speed signal	Engine Speed	rpm
Vehicle speed signal	Vehicle Speed	km/h or MPH
Ignition timing advance for #1 cylinder	Ignition timing adv. #1	°
Intake air temperature signal	Intake Air Temp.	°C or °F
Intake air amount	Mass Air Flow	g/s or lb/m
Throttle position signal	Throttle Opening Angle	%
Oxygen sensor (Bank 1 Sensor 2)	Oxygen sensor #12	V
A/F correction (Bank 1 Sensor 2)	Short term fuel trim #12	%
On-board diagnostic system	OBD System	—
Front oxygen (A/F) sensor (Bank 1 Sensor 1)	Oxygen sensor #11	—
Oxygen sensor (Bank 1 Sensor 2)	Oxygen sensor #12	—
Elapsed time after engine start	Time Since Engine Start	sec
Target EGR	Commanded EGR	%
EGR deviation	EGR Error	%
Evaporative purge	Commanded Evap Purge	%
Fuel level signal	Fuel Level	%
Fuel tank pressure signal	Fuel Tank Pressure	mmHg, kPa, inHg or psig
Atmospheric pressure	Atmosphere Pressure	mmHg, kPa, inHg or psig
ECM power supply voltage	Control module voltage	V
Absolute load	Absolute Load Value	%
A/F target lambda	Target Equivalence Ratio	—
Relative throttle opening angle	Relative Throttle Pos.	%
Ambient temperature	Ambient Temperature	°C or °F
Absolute throttle opening angle 2	Absolute Throttle Pos.#2	%
Absolute accelerator opening angle 1	Accelerator Pedal Pos.#1	%
Absolute accelerator opening angle 2	Accelerator Pedal Pos.#2	%
Target throttle opening angle	Target Throt. Act. Cont.	%
Neutral condition	AT drive status/MT gear status	—

5. V.I.N REGISTRATION

1) On «Main Menu» display, select {Each System Check}.
2) On «System Selection Menu» display, select {Engine Control System}.
3) Click the [OK] button after the information of engine type has been displayed.
4) On «Engine Diagnosis» display, select {Entry VIN}.
5) Perform the procedures shown on the display screen.

10. Read Diagnostic Trouble Code (DTC)

A: OPERATION

1. SUBARU SELECT MONITOR

NOTE:
• For detailed operation procedures, refer to “PC application help for Subaru Select Monitor”.
• For details concerning DTC, refer to “List of Diagnostic Trouble Code (DTC)”. <Ref. to EN(H4SO)(diag)-79, List of Diagnostic Trouble Code (DTC).>

2. GENERAL SCAN TOOL

Refer to data denoting emission-related powertrain DTC.
For details concerning DTC, refer to “List of Diagnostic Trouble Code (DTC)”. <Ref. to EN(H4SO)(diag)-79, List of Diagnostic Trouble Code (DTC).>

NOTE:
Refer to general scan tool manufacturer’s instruction manual to access powertrain DTC (MODE $03).

11.Inspection Mode

A: PROCEDURE

Perform the diagnosis shown in the following DTC table.
When performing the diagnosis not listed in “List of Diagnostic Trouble Code (DTC)”, refer to the item on the drive cycle. <Ref. to EN(H4SO)(diag)-47, Drive Cycle.>

DTC	Item	Condition
P0031	HO2S Heater Control Circuit Low (Bank 1 Sensor 1)	—
P0032	HO2S Heater Control Circuit High (Bank 1 Sensor 1)	—
P0037	HO2S Heater Control Circuit Low (Bank 1 Sensor 2)	—
P0038	HO2S Heater Control Circuit High (Bank 1 Sensor 2)	—
P0077	Intake Valve Control Solenoid Circuit High (Bank 1)	—
P0083	Intake Valve Control Solenoid Circuit High (Bank 2)	—
P0102	Mass or Volume Air Flow Circuit Low Input	—
P0103	Mass or Volume Air Flow Circuit High Input	—
P0107	Manifold Absolute Pressure/Barometric Pressure Circuit Low Input	—
P0108	Manifold Absolute Pressure/Barometric Pressure Circuit High Input	—
P0112	Intake Air Temperature Sensor 1 Circuit Low	—
P0113	Intake Air Temperature Sensor 1 Circuit High	—
P0117	Engine Coolant Temperature Circuit Low	—
P0118	Engine Coolant Temperature Circuit High	—
P0122	Throttle/Pedal Position Sensor/Switch “A” Circuit Low	—
P0123	Throttle/Pedal Position Sensor/Switch “A” Circuit High	—
P0131	O2 Sensor Circuit Low Voltage (Bank 1 Sensor 1)	—
P0132	O2 Sensor Circuit High Voltage (Bank 1 Sensor 1)	—
P0137	O2 Sensor Circuit Low Voltage (Bank 1 Sensor 2)	—
P0138	O2 Sensor Circuit High Voltage (Bank 1 Sensor 2)	—
P0140	O2 Sensor Circuit No Activity Detected (Bank 1 Sensor 2)	—
P0182	Fuel Temperature Sensor “A” Circuit Low Input	—
P0183	Fuel Temperature Sensor “A” Circuit High Input	—
P0197	Engine Oil Temperature Sensor Low	—
P0198	Engine Oil Temperature Sensor High	—
P0222	Throttle/Pedal Position Sensor/Switch “B” Circuit Low	—
P0223	Throttle/Pedal Position Sensor/Switch “B” Circuit High	—
P0327	Knock Sensor 1 Circuit Low (Bank 1 or Single Sensor)	—
P0328	Knock Sensor 1 Circuit High (Bank 1 or Single Sensor)	—
P0335	Crankshaft Position Sensor “A” Circuit	—
P0336	Crankshaft Position Sensor “A” Circuit Range/Performance	—
P0340	Camshaft Position Sensor “A” Circuit (Bank 1 or Single Sensor)	—
P0341	Camshaft Position Sensor “A” Circuit Range/Performance (Bank 1 or Single Sensor)	—
P0447	Evaporative Emission Control System Vent Control Circuit Open	—
P0448	Evaporative Emission Control System Vent Control Circuit Shorted	—
P0452	Evaporative Emission Control System Pressure Sensor Low Input	—
P0453	Evaporative Emission Control System Pressure Sensor High Input	—
P0458	Evaporative Emission System Purge Control Valve Circuit Low	—
P0462	Fuel Level Sensor “A” Circuit Low	—
P0463	Fuel Level Sensor “A” Circuit High	—
P0500	Vehicle Speed Sensor “A”	—
P0512	Starter Request Circuit	—
P0513	Incorrect Immobilizer Key	—

DTC	Item	Condition
P0604	Internal Control Module Random Access Memory (RAM) Error	—
P0605	Internal Control Module Read Only Memory (ROM) Error	—
P0607	Throttle Control System Circuit Range/Performance	—
P0638	Throttle Actuator Control Range/Performance (Bank 1)	—
P0700	Transmission Control System (MIL Request)	—
P0851	Park/Neutral Switch Input Circuit Low	—
P0852	Park/Neutral Switch Input Circuit High	—
P1152	O2 Sensor Circuit Range/Performance (Low) (Bank1 Sensor1)	—
P1153	O2 Sensor Circuit Range/Performance (High) (Bank1 Sensor1)	—
P1160	Return Spring Failure	—
P1518	Starter Switch Circuit Low Input	—
P1560	Back-Up Voltage Circuit Malfunction	—
P1570	Antenna	—
P1571	Reference Code Incompatibility	—
P1572	IMM Circuit Failure	—
P1574	Key Communication Failure	—
P1576	EGI Control Module EEPROM	—
P1577	IMM Control Module EEPROM	—
P1578	Meter Failure	—
P2101	Throttle Actuator Control Motor Circuit Range/Performance	—
P2102	Throttle Actuator Control Motor Circuit Low	—
P2103	Throttle Actuator Control Motor Circuit High	—
P2109	Throttle/Pedal Position Sensor “A” Minimum Stop Performance	—
P2122	Throttle/Pedal Position Sensor/Switch “D” Circuit Low Input	—
P2123	Throttle/Pedal Position Sensor/Switch “D” Circuit High Input	—
P2127	Throttle/Pedal Position Sensor/Switch “E” Circuit Low Input	—
P2128	Throttle/Pedal Position Sensor/Switch “E” Circuit High Input	—
P2135	Throttle/Pedal Position Sensor/Switch “A”/“B” Voltage Correlation	—
P2138	Throttle/Pedal Position Sensor/Switch “D”/“E” Voltage Correlation	—
P2227	Atmospheric Pressure Sensor Range/Performance	—
P2228	Barometric Pressure Circuit Low	—
P2229	Barometric Pressure Circuit High	—

1. PREPARATION FOR THE INSPECTION MODE

1) Check battery voltage is more than 12 V and fuel remains half [20 — 40 ℓ (5.3 — 10.6 US gal, 4.4 — 8.8 Imp gal)].
2) Lift up the vehicle using a garage jack and place it on rigid racks, or drive the vehicle onto free rollers.

WARNING:
• Before lifting up the vehicle, ensure parking brakes are applied.
• Do not use a pantograph jack in place of a rigid rack.
• Secure a rope or wire to the front or rear towing hooks to prevent the lateral runout of front wheels.
• Before rotating the wheels, make sure that there is no one in front of the vehicle. Besides while the wheels are rotating, make sure that no one approaches the vehicle front side.
• Make sure that there is nothing around the wheels. For AWD model, pay special attention to all four wheels.
• While servicing, do not depress or release the clutch pedal or accelerator pedal quickly regardless of the engine speed. Quick operation may cause the vehicle to drop off the free roller.
• To prevent the vehicle from slipping due to vibration, do not place anything between rigid rack and the vehicle.

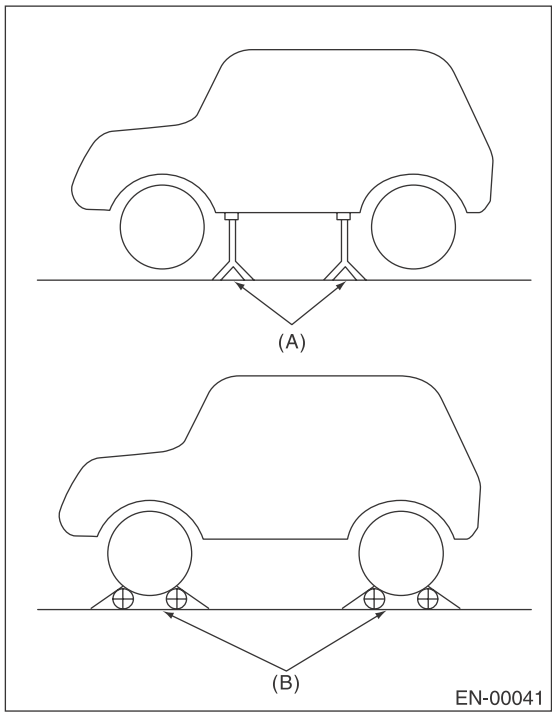

(A) Rigid rack
(B) Free roller

2. SUBARU SELECT MONITOR

1) Check that no DTC remains after clearing memory. <Ref. to EN(H4SO)(diag)-54, Clear Memory Mode.>
2) Warm up the engine.
3) Prepare the Subaru Select Monitor kit. <Ref. to EN(H4SO)(diag)-8, PREPARATION TOOL, General Description.>

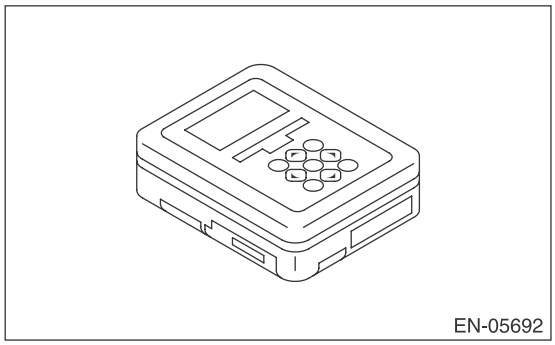

4) Prepare PC with Subaru Select Monitor installed.
5) Connect the USB cable to SDI (Subaru Diagnosis Interface) and USB port on the personal computer (dedicated port for the Subaru Select Monitor).

NOTE:
The dedicated port for the Subaru Select Monitor means the USB port which was used to install the Subaru Select Monitor.

6) Connect the diagnosis cable to SDI.
7) Install the delivery (test) mode fuse (A) of the fuse box.

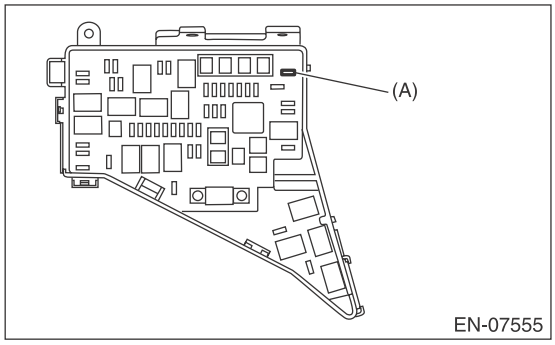

8) Connect SDI to data link connector located in the lower portion of the instrument panel (on the driver's side).

CAUTION:
Do not connect any scan tools except Subaru Select Monitor or general scan tool.

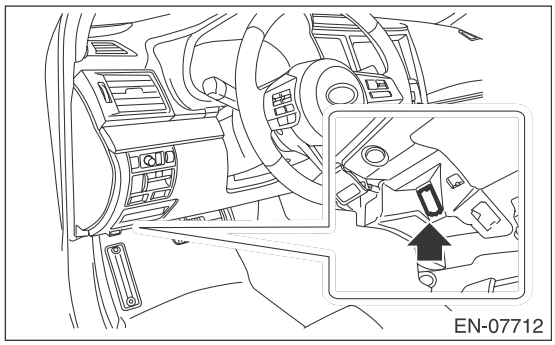

9) Start the PC.
10) Turn the ignition switch to ON (engine OFF) and run the "PC application for Subaru Select Monitor".
11) On «Main Menu» display, select {Each System Check}.
12) On «System Selection Menu» display, select {Engine Control System}.
13) Click the [OK] button after the information of engine type has been displayed.
14) On «Engine Diagnosis» display, select {Dealer Check Mode Procedure}.
15) When the «Perform Inspection (Dealer Check) Mode?» is shown on the screen, click the [Next] button.
16) Perform subsequent procedures as instructed on the display screen.
• If trouble still remains in the memory, the corresponding DTC appears on the display screen.

NOTE:
• For detailed operation procedures, refer to "PC application help for Subaru Select Monitor".
• For details concerning DTC, refer to "List of Diagnostic Trouble Code (DTC)". <Ref. to EN(H4SO)(diag)-79, List of Diagnostic Trouble Code (DTC).>
• Release the parking brake.
• The speed difference between front and rear wheels may illuminate the ABS warning light, but this does not indicate a malfunction. When engine control system diagnosis is finished, perform the VDC memory clearance procedure of self-diagnosis function. <Ref. to VDC(diag)-25, Clear Memory Mode.>

3. GENERAL SCAN TOOL

1) After performing the diagnostics and clearing the memory, check that no DTC remains. <Ref. to EN(H4SO)(diag)-32, MODE $04 (CLEAR/RESET EMISSION-RELATED DIAGNOSTIC INFORMATION), OPERATION, General Scan Tool.>
2) Warm up the engine.
3) Install the delivery (test) mode fuse (A) of the main fuse box.

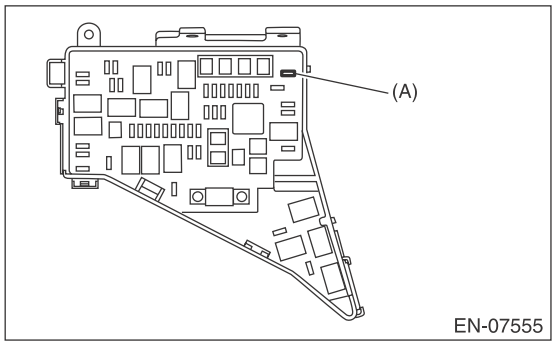

4) Connect the general scan tool to the data link connector located in the lower portion of the instrument panel (on the driver's side).

CAUTION:
Do not connect any scan tools except Subaru Select Monitor or general scan tool.

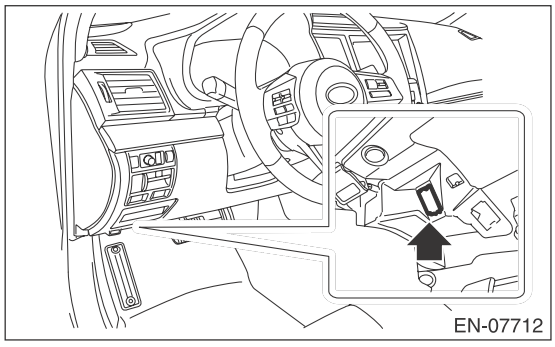

5) Start the engine.

NOTE:
• Make sure the select lever is placed in "P" position before starting. (CVT model)
• Depress the clutch pedal when starting engine. (MT model)
6) Turn the neutral position switch to ON operating select lever or shift lever.
7) Depress the brake pedal to turn the brake switch ON. (CVT model)
8) Keep the engine speed in 2,500 — 3,000 rpm range for 40 seconds.

9) Place the select lever or shift lever in “D” position (CVT model) or “1st gear” (MT model) and drive the vehicle at 5 to 10 km/h (3 to 6 MPH).

NOTE:
• For AWD model, release the parking brake.
• The speed difference between front and rear wheels may illuminate the ABS warning light, but this does not indicate a malfunction. When engine control system diagnosis is finished, perform the VDC memory clearance procedure of self-diagnosis function. <Ref. to VDC(diag)-25, Clear Memory Mode.>

10) Using the general scan tool, check for DTC and record the result(s).

NOTE:
• For detailed operation procedures, refer to the general scan tool operation manual.
• For details concerning DTC, refer to “List of Diagnostic Trouble Code (DTC)”.
<Ref. to EN(H4SO)(diag)-79, List of Diagnostic Trouble Code (DTC).>

12.Drive Cycle

A: PROCEDURE

It is necessary to perform the drive cycle listed below if DTC is not found in the Inspection Mode. It is possible to complete diagnosis of the DTC by performing the indicated drive cycle. After the repair for the DTC, perform a necessary drive cycle and make sure the function recovers and the DTC is recorded.

1. PREPARATION FOR DRIVE CYCLE

1) Check that the battery voltage is 12 V or more and fuel remains approx. half [20 — 40 ℓ (5.3 — 10.6 US gal, 4.4 — 8.8 Imp gal)].
2) After performing the diagnostics and Clear Memory Mode, check that no DTC remains. <Ref. to EN(H4SO)(diag)-54, Clear Memory Mode.>
3) Check the delivery (test) mode fuse is removed.

NOTE:
• Perform the drive cycle after warming up the engine except when the engine coolant temperature at engine start is specified.
• Perform the drive cycle twice if the DTC in the list is marked with *. After completing the first drive cycle, stop the engine and perform second diagnosis in same condition.

2. DRIVE CYCLE A

DTC	Item	Condition
*P0125	Insufficient Coolant Temperature for Closed Loop Fuel Control	Engine coolant temperature at engine start is less than 20°C (68°F).
*P0126	Insufficient Engine Coolant Temperature for Stable Operation	—
*P0128	Coolant Thermostat (Engine Coolant Temperature Below Thermostat Regulating Temperature)	—
*P0133	O2 Sensor Circuit Slow Response (Bank 1 Sensor 1)	—
*P0141	O2 Sensor Heater Circuit (Bank1 Sensor2)	—
*P0171	System Too Lean (Bank 1)	Complete diagnosis with drive cycle B or C as well.
*P0172	System Too Rich (Bank 1)	Complete diagnosis with drive cycle B or C as well.
*P0196	Engine Oil Temperature Sensor Circuit Range/Performance	—
*P0301	Cylinder 1 Misfire Detected	Complete diagnosis with drive cycle B or C as well.
*P0302	Cylinder 2 Misfire Detected	Complete diagnosis with drive cycle B or C as well.
*P0303	Cylinder 3 Misfire Detected	Complete diagnosis with drive cycle B or C as well.
*P0304	Cylinder 4 Misfire Detected	Complete diagnosis with drive cycle B or C as well.
*P0420	Catalyst System Efficiency Below Threshold (Bank 1)	—
*P0442	Evaporative Emission Control System Leak Detected (Small Leak)	Engine coolant temperature at engine start is less than 30°C (86°F).
*P0451	Evaporative Emission Control System Pressure Sensor	—
*P0456	Evaporative Emission Control System Leak Detected (Very Small Leak)	Engine coolant temperature at engine start is less than 30°C (86°F).
*P0457	Evaporative Emission Control System Leak Detected (Fuel Cap Loose/Off)	Engine coolant temperature at engine start is less than 30°C (86°F).
*P0459	Evaporative Emission System Purge Control Valve Circuit High	—
P1443	Vent Control Solenoid Valve Function Problem	—
*P2096	Post Catalyst Fuel Trim System Too Lean (Bank 1)	Complete diagnosis with drive cycle B or C as well.
*P2097	Post Catalyst Fuel Trim System Too Rich (Bank 1)	Complete diagnosis with drive cycle B or C as well.

Diagnostic procedure:
1) Drive for 20 minutes at a constant speed of 80 km/h (50 MPH).
2) Stop the vehicle and idle for one minute.

3. DRIVE CYCLE B

DTC	Item	Condition
*P0171	System Too Lean (Bank 1)	Complete diagnosis with drive cycle A or C as well.
*P0172	System Too Rich (Bank 1)	Complete diagnosis with drive cycle A or C as well.
*P0301	Cylinder 1 Misfire Detected	Complete diagnosis with drive cycle A or C as well.
*P0302	Cylinder 2 Misfire Detected	Complete diagnosis with drive cycle A or C as well.
*P0303	Cylinder 3 Misfire Detected	Complete diagnosis with drive cycle A or C as well.
*P0304	Cylinder 4 Misfire Detected	Complete diagnosis with drive cycle A or C as well.
*P0464	Fuel Level Sensor Circuit Intermittent	—
*P0506	Idle Air Control System RPM Lower Than Expected	—
*P0507	Idle Air Control System RPM Higher Than Expected	—
*P2096	Post Catalyst Fuel Trim System Too Lean (Bank 1)	Complete diagnosis with drive cycle A or C as well.
*P2097	Post Catalyst Fuel Trim System Too Rich (Bank 1)	Complete diagnosis with drive cycle A or C as well.

Diagnostic procedure:
1) Drive at 10 km/h (6 MPH) or more.
2) Stop the vehicle and idle for ten minutes.

4. DRIVE CYCLE C

DTC	Item	Condition
P0026	Intake Valve Control Solenoid Circuit Range/Performance (Bank 1)	—
P0028	Intake Valve Control Solenoid Circuit Range/Performance (Bank 2)	—
*P0030	HO2S Heater Control Circuit (Bank 1 Sensor 1)	—
*P0068	MAP/MAF - Throttle Position Correlation	—
P0076	Intake Valve Control Solenoid Circuit Low (Bank 1)	—
P0082	Intake Valve Control Solenoid Circuit Low (Bank 2)	—
*P0101	Mass or Volume Air Flow Circuit Range/Performance	—
P0134	O2 Sensor Circuit No Activity Detected (Bank 1 Sensor 1)	—
*P0139	O2 Sensor Circuit Slow Response (Bank 1 Sensor 2)	—
*P0171	System Too Lean (Bank 1)	Complete diagnosis with drive cycle A or B as well.
*P0172	System Too Rich (Bank 1)	Complete diagnosis with drive cycle A or B as well.
*P0301	Cylinder 1 Misfire Detected	Complete diagnosis with drive cycle A or B as well.
*P0302	Cylinder 2 Misfire Detected	Complete diagnosis with drive cycle A or B as well.
*P0303	Cylinder 3 Misfire Detected	Complete diagnosis with drive cycle A or B as well.
*P0304	Cylinder 4 Misfire Detected	Complete diagnosis with drive cycle A or B as well.
*P0400	Exhaust Gas Recirculation Flow	—
P1492	EGR Solenoid Valve Signal #1 Circuit Malfunction (Low Input)	—
P1493	EGR Solenoid Valve Signal #1 Circuit Malfunction (High Input)	—
P1494	EGR Solenoid Valve Signal #2 Circuit Malfunction (Low Input)	—
P1495	EGR Solenoid Valve Signal #2 Circuit Malfunction (High Input)	—
P1496	EGR Solenoid Valve Signal #3 Circuit Malfunction (Low Input)	—
P1497	EGR Solenoid Valve Signal #3 Circuit Malfunction (High Input)	—
P1498	EGR Solenoid Valve Signal #4 Circuit Malfunction (Low Input)	—
P1499	EGR Solenoid Valve Signal #4 Circuit Malfunction (High Input)	—
*P2096	Post Catalyst Fuel Trim System Too Lean (Bank 1)	Complete diagnosis with drive cycle A or B as well.
*P2097	Post Catalyst Fuel Trim System Too Rich (Bank 1)	Complete diagnosis with drive cycle A or B as well.

Diagnostic procedure:
Drive according to the drive pattern described below.

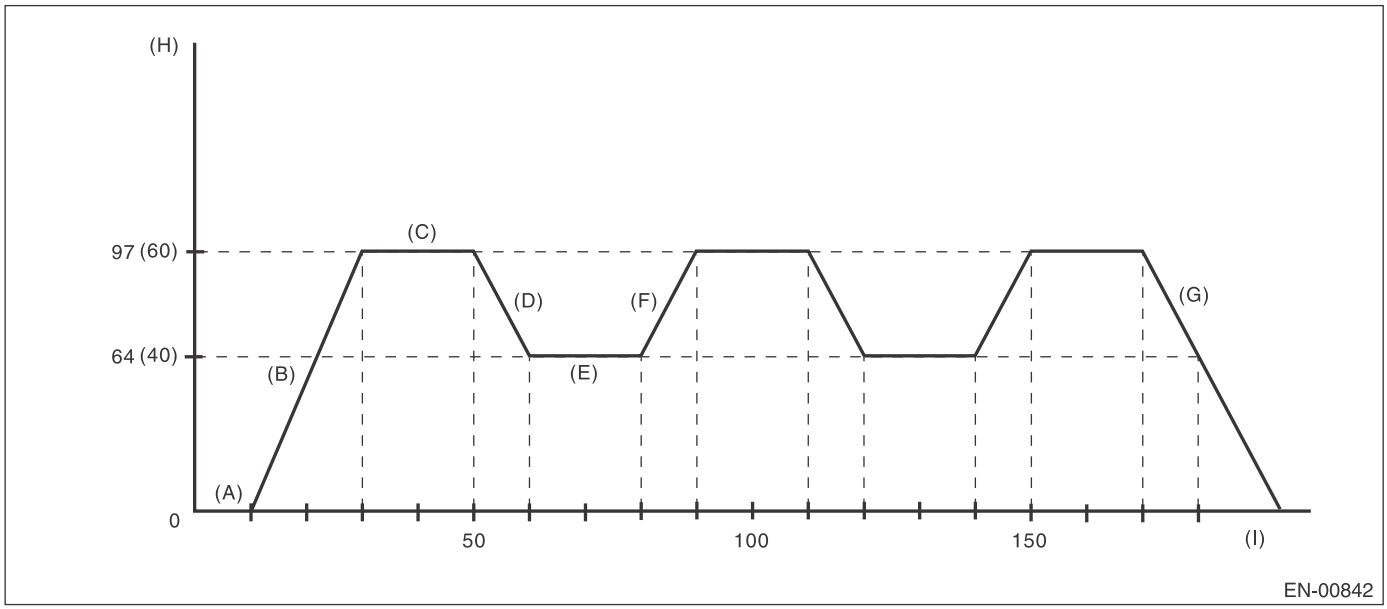

(A)	Idle the engine for 10 seconds or more.	(D)	Decelerate the vehicle to 64 km/h (40 MPH) with throttle fully closed.	(G)	Stop the vehicle with throttle fully closed.
(B)	Accelerate the vehicle to 97 km/h (60 MPH) within 20 seconds.	(E)	Drive the vehicle at 64 km/h (40 MPH) for 20 seconds.	(H)	Vehicle speed km/h (MPH)
(C)	Drive the vehicle at 97 km/h (60 MPH) for 20 seconds.	(F)	Accelerate the vehicle to 97 km/h (60 MPH) within 10 seconds.	(I)	Sec.

5. DRIVE CYCLE D

DTC	Item	Condition
*P0181	Fuel Temperature Sensor “A” Circuit Range/Performance	—

NOTE:
In drive cycle D, one drive cycle will be established when both the drift diagnosis and stuck diagnosis have completed.
Diagnostic procedure:

DRIFT DIAGNOSIS

1) Make sure of the items below before starting the engine.
- Engine coolant temperature is less than 30°C (86°F).
- Remaining fuel is 10 ℓ (2.6 US gal, 2.2 Imp gal) or more.
- Battery voltage is 10.9 V or more.

2) Idle the engine until engine coolant temperature is at least 10°C (18°F) higher than it was when engine started.
3) After the engine has reached the state of procedure 2), idle the engine for another 5 minutes or more.

STUCK DIAGNOSIS

1) Make sure that the battery voltage is 10.9 V or more.
2) Perform the Clear Memory Mode. <Ref. to EN(H4SO)(diag)-54, Clear Memory Mode.>
3) Drive the vehicle for the distance equal to the fuel of 50 ℓ (13.2 US gal, 11 Imp gal).

NOTE:
- It is acceptable to drive the vehicle intermittently.
- Do not disconnect the battery terminals during stuck diagnosis. (Data will be cleared by disconnecting the battery terminals.)

6. DRIVE CYCLE E

DTC	Item	Condition
*P0461	Fuel Level Sensor “A” Circuit Range/Performance	—

Diagnostic procedure:
1) Make sure that the battery voltage is 10.9 V or more.
2) Perform the Clear Memory Mode. <Ref. to EN(H4SO)(diag)-54, Clear Memory Mode.>
3) Drive the vehicle for the distance equal to the fuel of 30 ℓ (7.9 US gal, 6.6 Imp gal).

NOTE:
• It is acceptable to drive the vehicle intermittently.
• Do not disconnect the battery terminals while diagnosing. (Data will be cleared by disconnecting the battery terminals.)

7. DRIVE CYCLE F

DTC	Item	Condition
*P0111	Intake Air Temperature Sensor 1 Circuit Range/Performance	—

Diagnostic procedure:
1) Make sure that the engine coolant temperature is less than 30°C (86°F).
2) Drive according to the drive pattern described below.

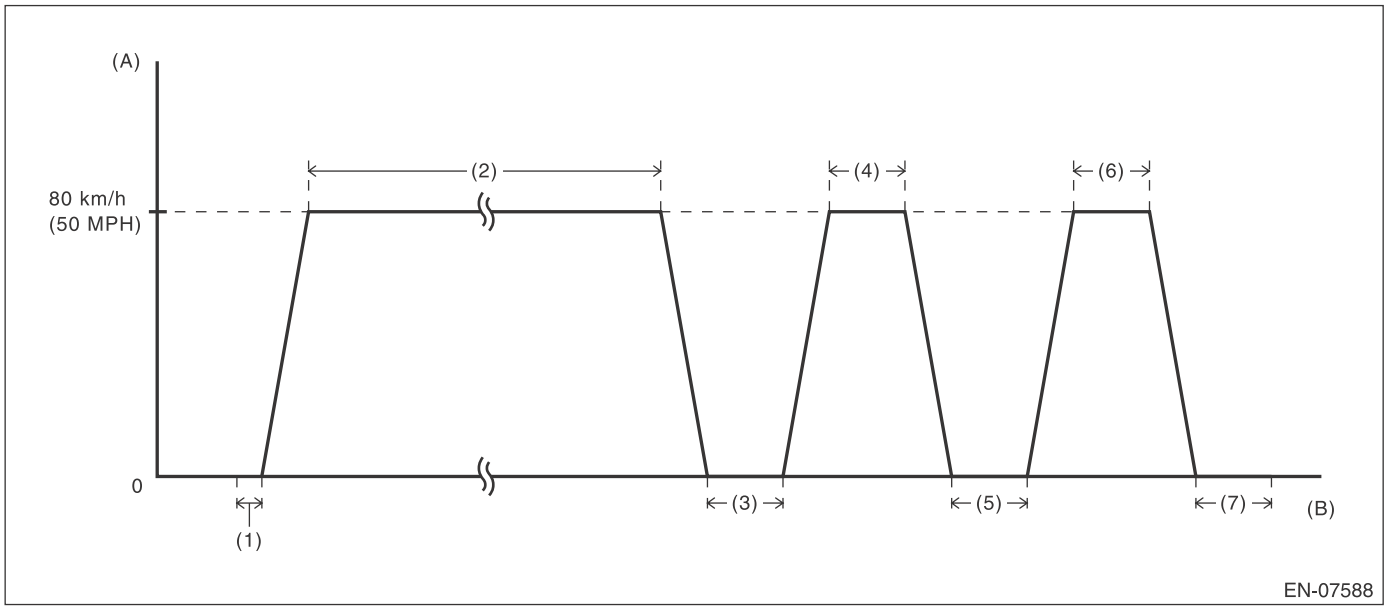

(A) Vehicle speed
(B) Elapsed time
(1) Idle the engine for 10 seconds after engine start.
(2) Drive for 8 minutes at a constant speed of 80 km/h (50 MPH).
(3) Stop the vehicle and idle for 30 seconds.
(4) Drive for 30 seconds at a constant speed of 80 km/h (50 MPH).
(5) Stop the vehicle and idle for 30 seconds.
(6) Drive for 30 seconds at a constant speed of 80 km/h (50 MPH).
(7) Stop the vehicle and idle for 30 seconds.

NOTE:
• There is no given transition time between idling and cruising.
• Driving at constant speed only on a downhill causes smaller engine load and may result in failure to obtain a right diagnostic result.
• When the engine stops while performing drive cycle F, perform it again from the state of procedure 1).

8. DRIVE CYCLE H

DTC	Item	Condition
*P1602	Control Module Programming Error	—

Diagnostic procedure:
1) Perform the Clear Memory Mode. <Ref. to EN(H4SO)(diag)-54, Clear Memory Mode.>
2) With the ignition switch ON (engine OFF), read the engine coolant temperature, intake air temperature and fuel temperature. <Ref. to EN(H4SO)(diag)-34, READ CURRENT DATA FOR ENGINE (NORMAL MODE), OPERATION, Subaru Select Monitor.>
3) If the values from step 2) satisfy the following two conditions, idle the engine for one minute.

Condition:
| Engine coolant temperature — Intake air temperature | ≤ 5°C (41°F)
| Engine coolant temperature — Fuel temperature | ≤ 2°C (36°F)

NOTE:
- If the conditions are not satisfied, turn the ignition switch to OFF and wait until the parameters are satisfied.
- For CVT models, hold the select lever to “P” range or “N” range at idling, and for MT models, the shift lever in the neutral position at idling.

13.Clear Memory Mode

A: OPERATION

1. SUBARU SELECT MONITOR

NOTE:
• Initial diagnosis of electronic throttle control is performed after memory clearance. Wait for 10 seconds or more after turning the ignition switch to ON, and then start the engine.
• For detailed operation procedures, refer to “PC application help for Subaru Select Monitor”.

2. GENERAL SCAN TOOL

For clear memory procedures using the general scan tool, refer to “General Scan Tool Instruction Manual”.

NOTE:
Initial diagnosis of electronic throttle control is performed after memory clearance. For this reason, start the engine after 10 seconds or more have elapsed since the ignition switch was turned to ON.

14. System Operation Check Mode

A: OPERATION

CAUTION:
After executing the system operation check mode, execute the Clear Memory Mode. <Ref. to EN(H4SO)(diag)-54, OPERATION, Clear Memory Mode.>

NOTE:
For detailed operation procedures, refer to “PC application help for Subaru Select Monitor”.

15.Malfunction Indicator Light

A: PROCEDURE

1. Activation of malfunction indicator light. <Ref. to EN(H4SO)(diag)-57, ACTIVATION OF MALFUNCTION INDICATOR LIGHT, Malfunction Indicator Light.>
↓
2. Malfunction indicator light does not come on. <Ref. to EN(H4SO)(diag)-59, MALFUNCTION INDICATOR LIGHT DOES NOT COME ON, Malfunction Indicator Light.>
↓
3. Malfunction indicator light does not go off. <Ref. to EN(H4SO)(diag)-61, MALFUNCTION INDICATOR LIGHT DOES NOT GO OFF, Malfunction Indicator Light.>
↓
4. Malfunction indicator light does not blink. <Ref. to EN(H4SO)(diag)-62, MALFUNCTION INDICATOR LIGHT DOES NOT BLINK, Malfunction Indicator Light.>
↓
5. Malfunction indicator light remains blinking. <Ref. to EN(H4SO)(diag)-64, MALFUNCTION INDICATOR LIGHT REMAINS BLINKING, Malfunction Indicator Light.>

B: ACTIVATION OF MALFUNCTION INDICATOR LIGHT

1) When the ignition switch is turned to ON (engine OFF), the malfunction indicator light (A) in the combination meter illuminates.

NOTE:
If the malfunction indicator light does not illuminate, perform diagnostics of the malfunction indicator light circuit or the combination meter circuit. <Ref. to EN(H4SO)(diag)-59, MALFUNCTION INDICATOR LIGHT DOES NOT COME ON, Malfunction Indicator Light.>

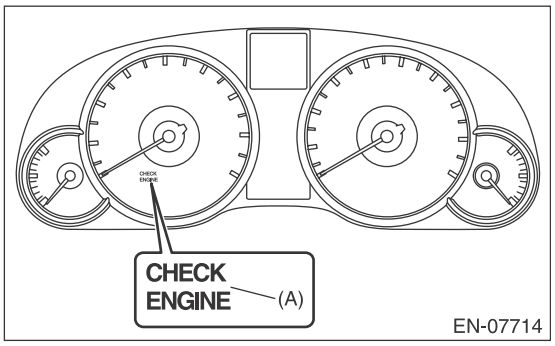

2) After starting the engine, the malfunction indicator light goes out. If it does not go off, any of the engine and emission control system has malfunction.

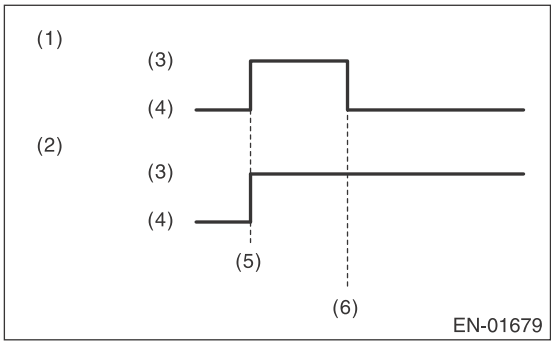

(1) No faulty
(2) Trouble occurs
(3) ON
(4) OFF
(5) Ignition switch ON
(6) Engine start

3) If the diagnostic system detects a misfire which could damage the catalyst, the malfunction indicator light will blink at a cycle of 1 Hz.

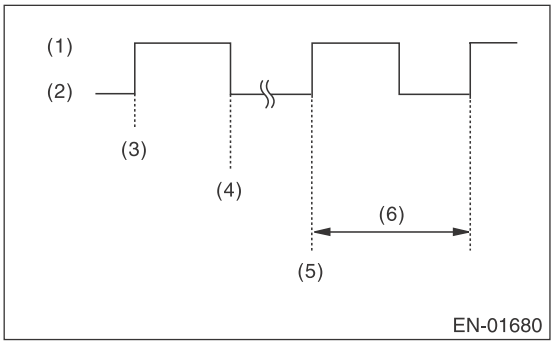

(1) ON
(2) OFF
(3) Ignition switch ON
(4) Engine start
(5) Misfire start
(6) 1 second

4) Install the delivery (test) mode fuse (A) with ignition switch to OFF.

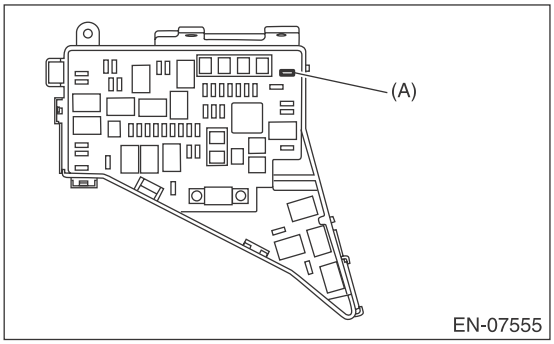

(1) When the ignition switch is turned to ON (engine OFF), the malfunction indicator light illuminates.
(2) After the engine starts, malfunction indicator light blinks in a cycle of 0.5 Hz. (During diagnosis)

(3) Malfunction indicator light blinks at a cycle of 3 Hz after diagnosis if there is no trouble. Malfunction indicator light illuminates if faulty.

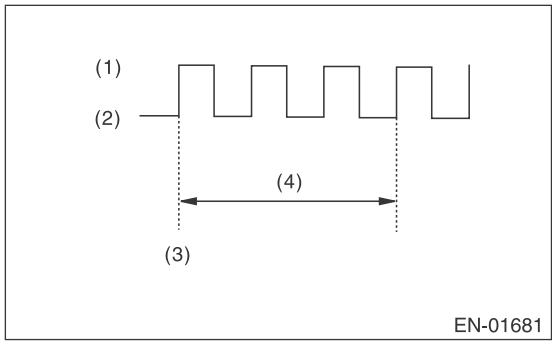

(1) ON
(2) OFF
(3) Ignition switch ON
(4) 1 second

C: MALFUNCTION INDICATOR LIGHT DOES NOT COME ON

DIAGNOSIS:
The malfunction indicator light circuit is open or shorted.
TROUBLE SYMPTOM:
When the ignition switch is turned to ON (engine OFF), malfunction indicator light does not illuminate.
WIRING DIAGRAM:

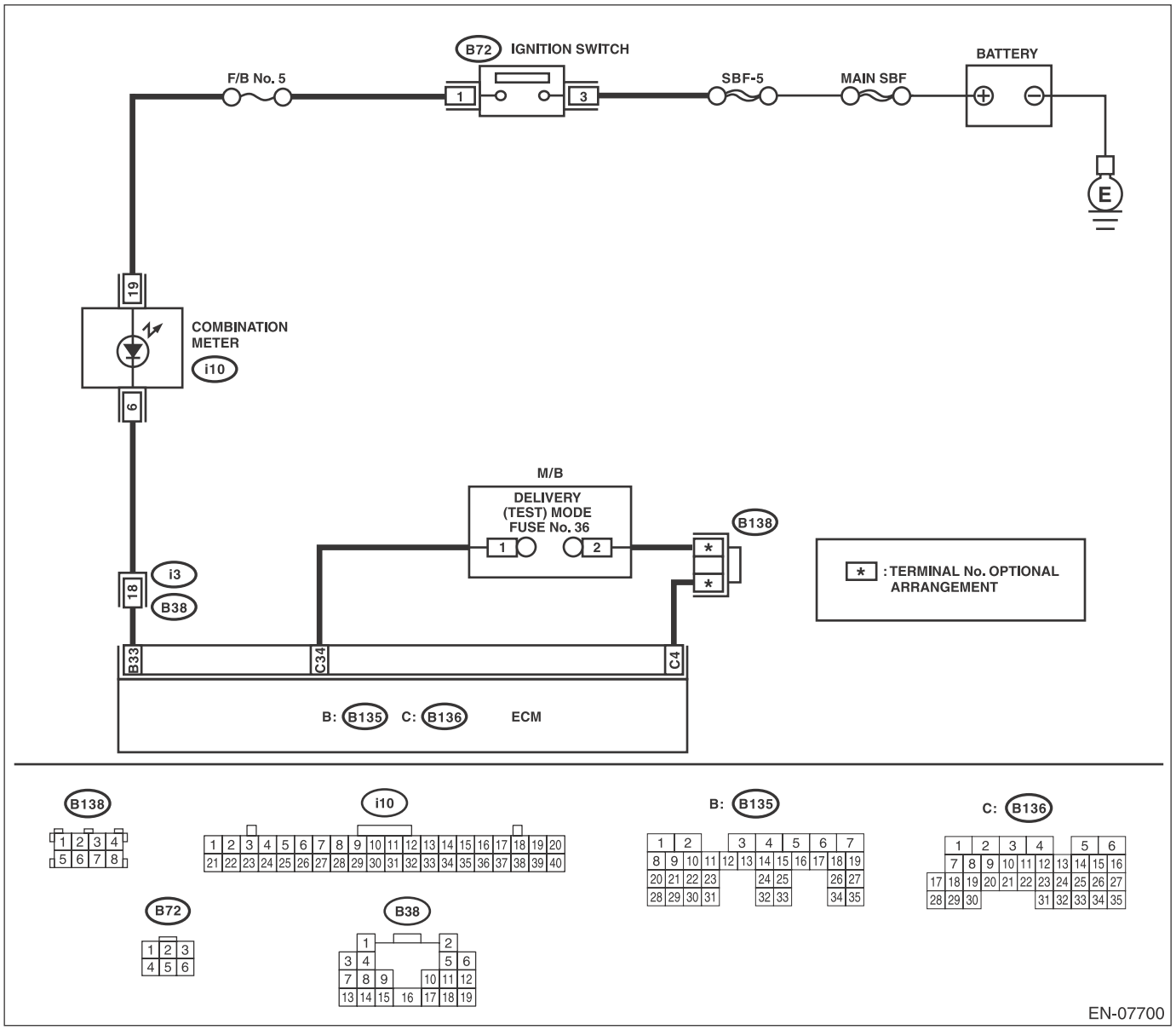

Step		Check	Yes	No
1	**CHECK OUTPUT SIGNAL OF ECM.** 1) Turn the ignition switch to ON. 2) Measure the voltage between ECM connector and chassis ground. ***Connector & terminal*** ***(B135) No. 33 (+) — Chassis ground (–):***	Is the voltage 10 V or more?	Go to step **5**.	Go to step **2**.

	Step	Check	Yes	No
2	**CHECK HARNESS BETWEEN ECM AND COMBINATION METER CONNECTOR.** 1) Turn the ignition switch to OFF. 2) Remove the combination meter. <Ref. to IDI-20, Combination Meter.> 3) Disconnect the connector from ECM and combination meter. 4) Measure the resistance of harness between ECM and combination meter connector. ***Connector & terminal*** ***(B135) No. 33 — (i10) No. 6:***	Is the resistance less than 1 Ω?	Go to step **3**.	Repair the harness and connector. NOTE: In this case, repair the following item: • Open circuit in harness between ECM and combination meter connector • Poor contact of coupling connector
3	**CHECK FOR POOR CONTACT.** Check for poor contact of combination meter connector.	Is there poor contact of combination meter connector?	Repair the poor contact of combination meter connector.	Go to step **4**.
4	**CHECK HARNESS BETWEEN COMBINATION METER AND IGNITION SWITCH CONNECTOR.** 1) Turn the ignition switch to ON. 2) Measure the voltage between combination meter connector and chassis ground. ***Connector & terminal*** ***(i10) No. 19 (+) — Chassis ground (–):***	Is the voltage 10 V or more?	Replace the meter case assembly of combination meter. <Ref. to IDI-20, Combination Meter.>	Check the following item and repair if necessary. NOTE: • Blown-out of fuse (F/B No. 5) • Open circuit or short circuit to ground in harness of power supply circuit
5	**CHECK FOR POOR CONTACT.** Check for poor connection by shaking or pulling ECM harness.	Does the malfunction indicator light illuminate?	Repair the poor contact of ECM connector.	Go to step **6**.
6	**CHECK ECM CONNECTOR.** Check the connection of ECM connector.	Is the ECM connector correctly connected?	Replace the ECM. <Ref. to FU(H4SO)-39, Engine Control Module (ECM).>	Repair the connection of ECM connector.

D: MALFUNCTION INDICATOR LIGHT DOES NOT GO OFF

DIAGNOSIS:
The malfunction indicator light circuit is shorted.

TROUBLE SYMPTOM:
Although malfunction indicator light comes on when the engine runs, DTC is not shown on the Subaru Select Monitor or general scan tool display.

WIRING DIAGRAM:

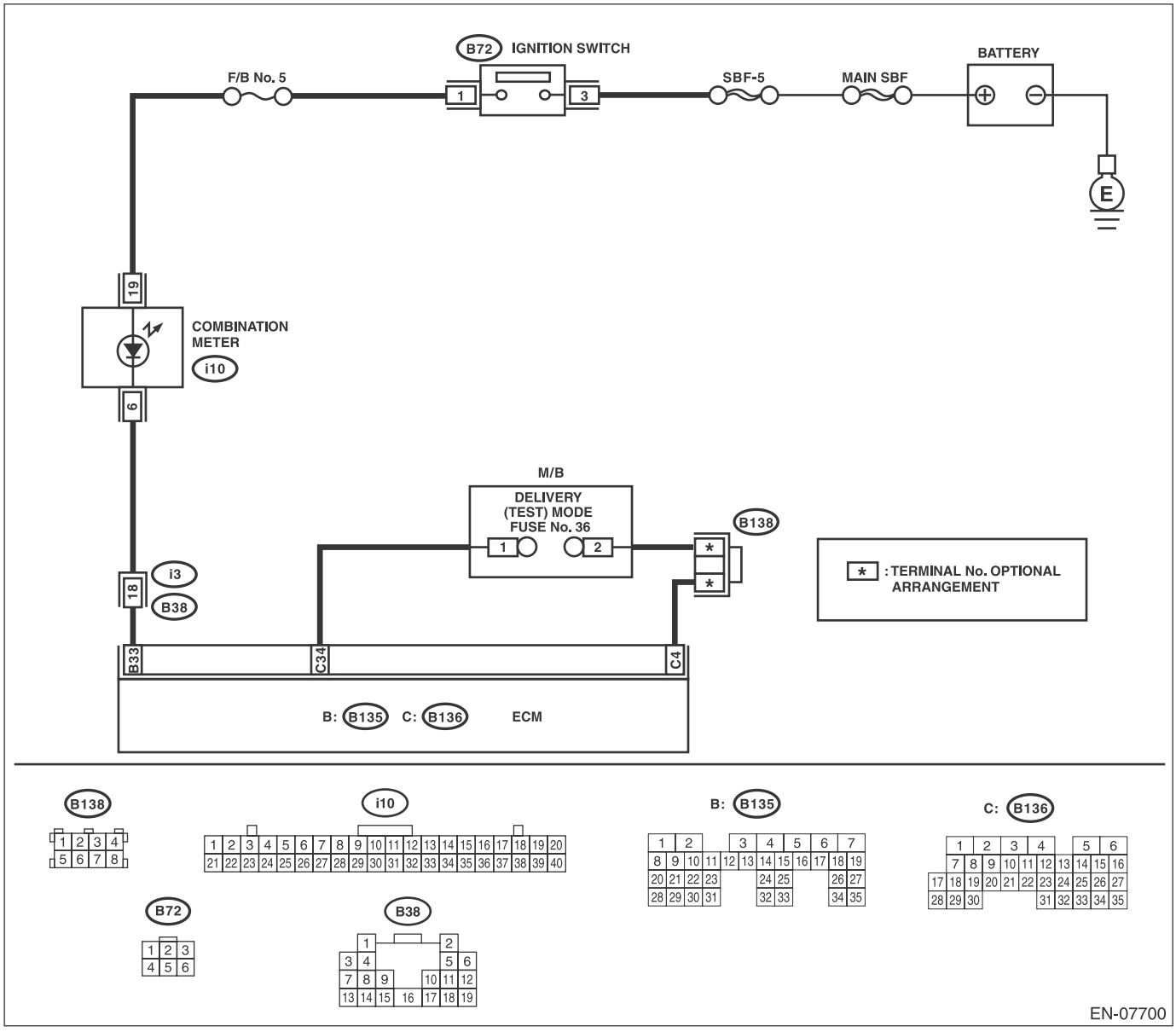

Step		Check	Yes	No
1	**CHECK HARNESS BETWEEN ECM AND COMBINATION METER CONNECTOR.** 1) Turn the ignition switch to OFF. 2) Disconnect the connector from ECM. 3) Turn the ignition switch to ON.	Does the malfunction indicator light illuminate?	Repair the ground short circuit of harness between ECM and combination meter connector.	Replace the ECM. <Ref. to FU(H4SO)-39, Engine Control Module (ECM).>

E: MALFUNCTION INDICATOR LIGHT DOES NOT BLINK

DIAGNOSIS:

- The malfunction indicator light circuit is open or shorted.
- The delivery (test) mode fuse circuit is open.

TROUBLE SYMPTOM:

Malfunction indicator light does not blink during Inspection Mode.

WIRING DIAGRAM:

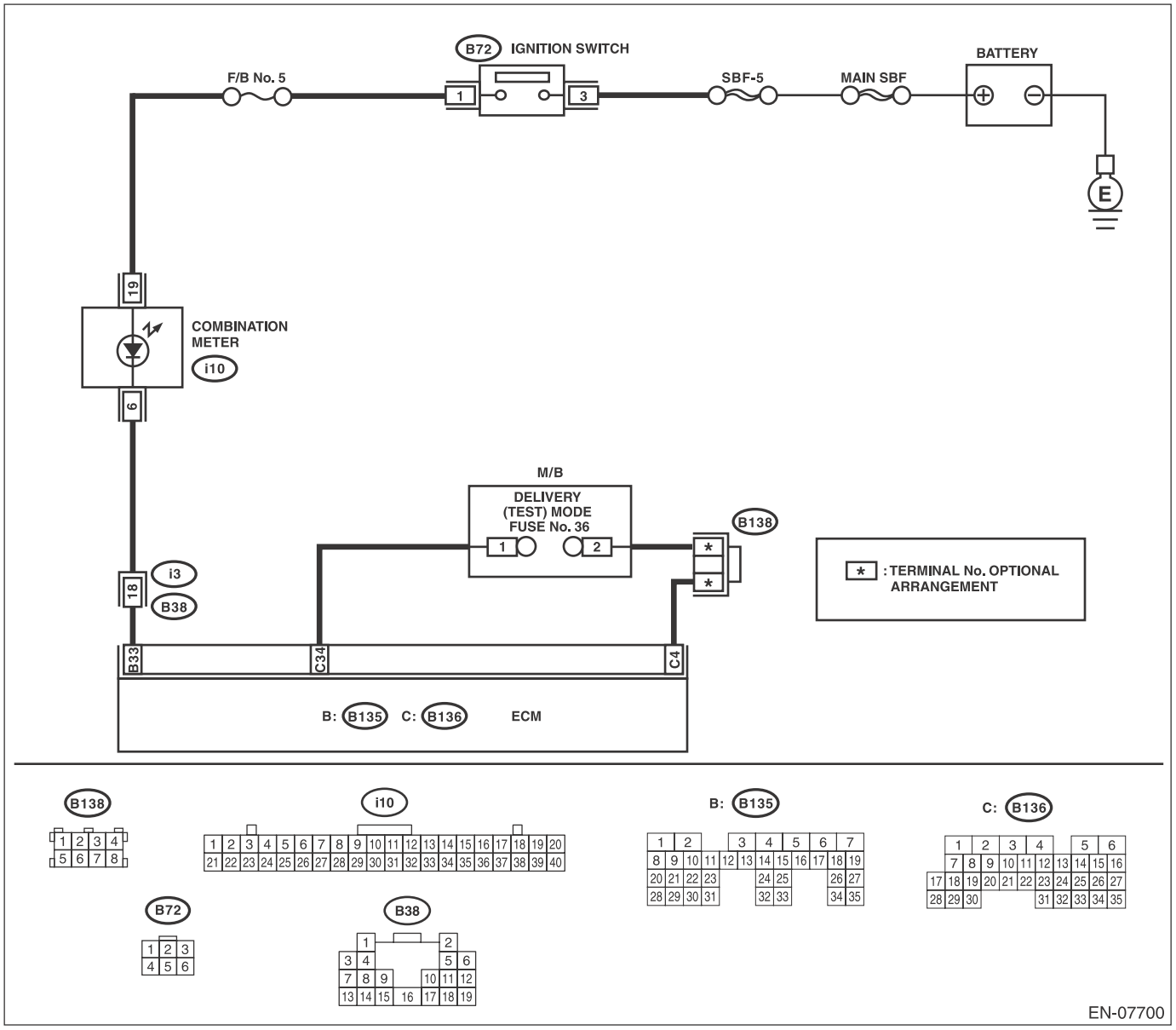

	Step	Check	Yes	No
1	**CHECK STATUS OF MALFUNCTION INDICATOR LIGHT.** 1) Turn the ignition switch to OFF. 2) Check the delivery (test) mode fuse is removed. 3) Turn the ignition switch to ON. (engine OFF)	Does the malfunction indicator light illuminate?	Go to step **2**.	Repair the malfunction indicator light circuit. <Ref. to EN(H4SO)(diag)-59, MALFUNCTION INDICATOR LIGHT DOES NOT COME ON, Malfunction Indicator Light.>
2	**CHECK HARNESS BETWEEN ECM AND COMBINATION METER CONNECTOR.** 1) Turn the ignition switch to OFF. 2) Disconnect the connector from ECM. 3) Turn the ignition switch to ON.	Does the malfunction indicator light illuminate?	Repair the ground short circuit of harness between ECM and combination meter connector.	Go to step **3**.
3	**CHECK HARNESS BETWEEN ECM AND DELIVERY (TEST) MODE FUSE.** 1) Turn the ignition switch to OFF. 2) Install the delivery (test) mode fuse of the main fuse box. 3) Measure the resistance of harness between ECM connectors. ***Connector & terminal*** ***(B136) No. 34 — (B136) No. 4:***	Is the resistance less than 1 Ω?	Go to step **4**.	Repair the harness and connector. NOTE: In this case, repair the following item: • Open circuit of harness between ECM and delivery (test) mode fuse • Poor contact of joint connector
4	**CHECK FOR POOR CONTACT.** Check for poor contact of ECM connector.	Is there poor contact of ECM connector?	Repair the poor contact of ECM connector.	Replace the ECM. <Ref. to FU(H4SO)-39, Engine Control Module (ECM).>

F: MALFUNCTION INDICATOR LIGHT REMAINS BLINKING

DIAGNOSIS:
The delivery (test) mode fuse circuit is shorted.
TROUBLE SYMPTOM:
Malfunction indicator light blinks when delivery (test) mode fuse is not connected.
WIRING DIAGRAM:

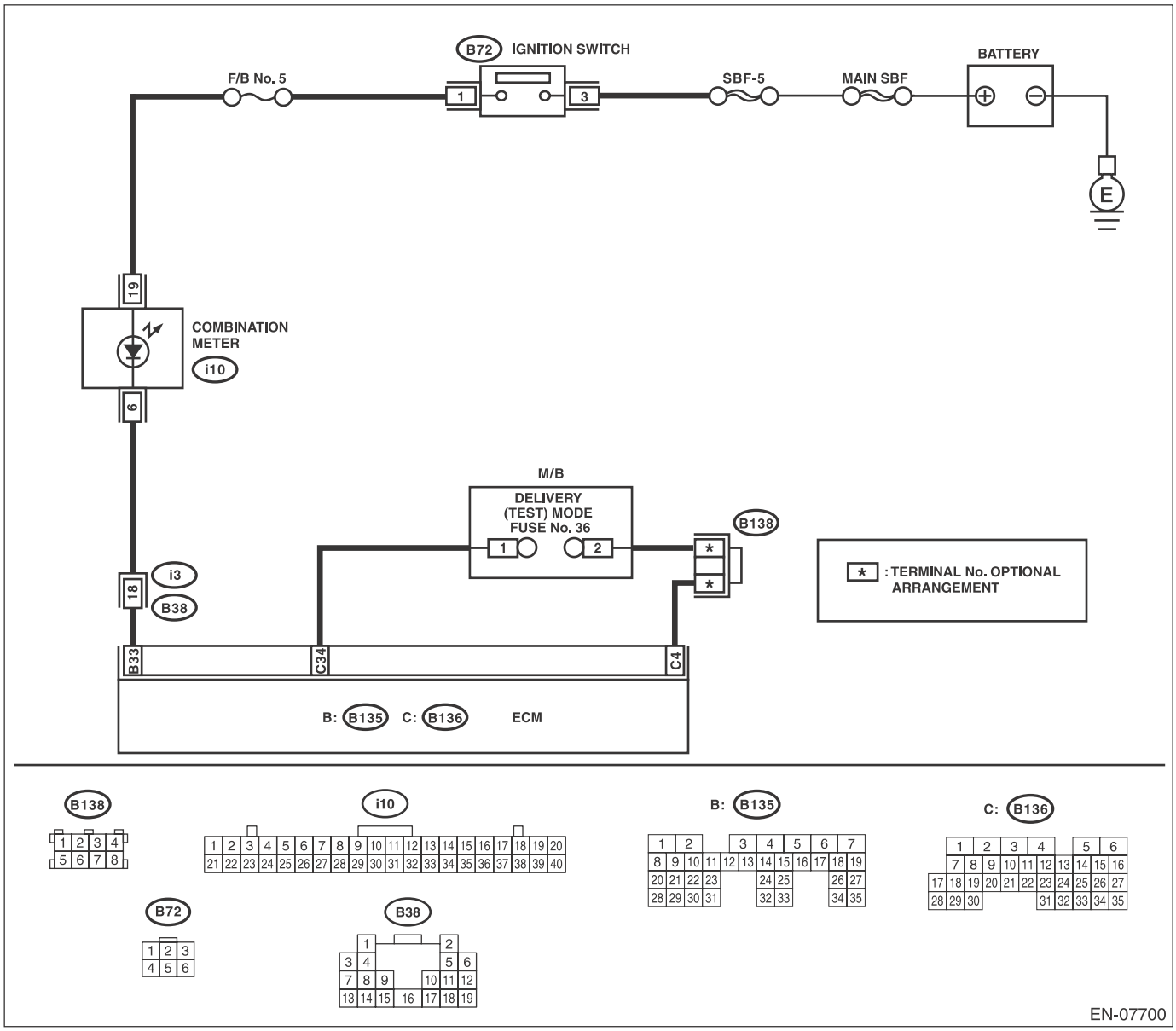

Step		Check	Yes	No
1	**CHECK DELIVERY (TEST) MODE FUSE.** 1) Check the delivery (test) mode fuse is removed. 2) Turn the ignition switch to ON.	Does the malfunction indicator light blink?	Go to step **2**.	System is normal. NOTE: Malfunction indicator light blinks when delivery (test) mode fuse is connected.

Step		Check	Yes	No
2	**CHECK HARNESS BETWEEN ECM AND CHASSIS GROUND.** 1) Turn the ignition switch to OFF. 2) Disconnect the connector from ECM. 3) Measure the resistance of harness between ECM and chassis ground. ***Connector & terminal*** ***(B136) No. 34 — Chassis ground:***	Is the resistance less than 5 Ω?	Repair the short circuit to ground in harness between ECM and delivery (test) mode fuse.	Replace the ECM. <Ref. to FU(H4SO)-39, Engine Control Module (ECM).>

16.Diagnostics for Engine Starting Failure

A: PROCEDURE

1. Check of the fuel amount
↓
2. Inspection of starter motor circuit. <Ref. to EN(H4SO)(diag)-67, STARTER MOTOR CIRCUIT, Diagnostics for Engine Starting Failure.>
↓
3. Inspection of ECM power supply and ground line. <Ref. to EN(H4SO)(diag)-71, CHECK POWER SUPPLY AND GROUND LINE OF ENGINE CONTROL MODULE (ECM), Diagnostics for Engine Starting Failure.>
↓
4. Inspection of ignition control system. <Ref. to EN(H4SO)(diag)-73, IGNITION CONTROL SYSTEM, Diagnostics for Engine Starting Failure.>
↓
5. Inspection of fuel pump circuit. <Ref. to EN(H4SO)(diag)-75, FUEL PUMP CIRCUIT, Diagnostics for Engine Starting Failure.>
↓
6. Inspection of fuel injector circuit. <Ref. to EN(H4SO)(diag)-77, FUEL INJECTOR CIRCUIT, Diagnostics for Engine Starting Failure.>

B: STARTER MOTOR CIRCUIT

CAUTION:
After servicing or replacing faulty parts, perform Clear Memory Mode <Ref. to EN(H4SO)(diag)-54, Clear Memory Mode.>, and Inspection Mode <Ref. to EN(H4SO)(diag)-42, Inspection Mode.>.
WIRING DIAGRAM:

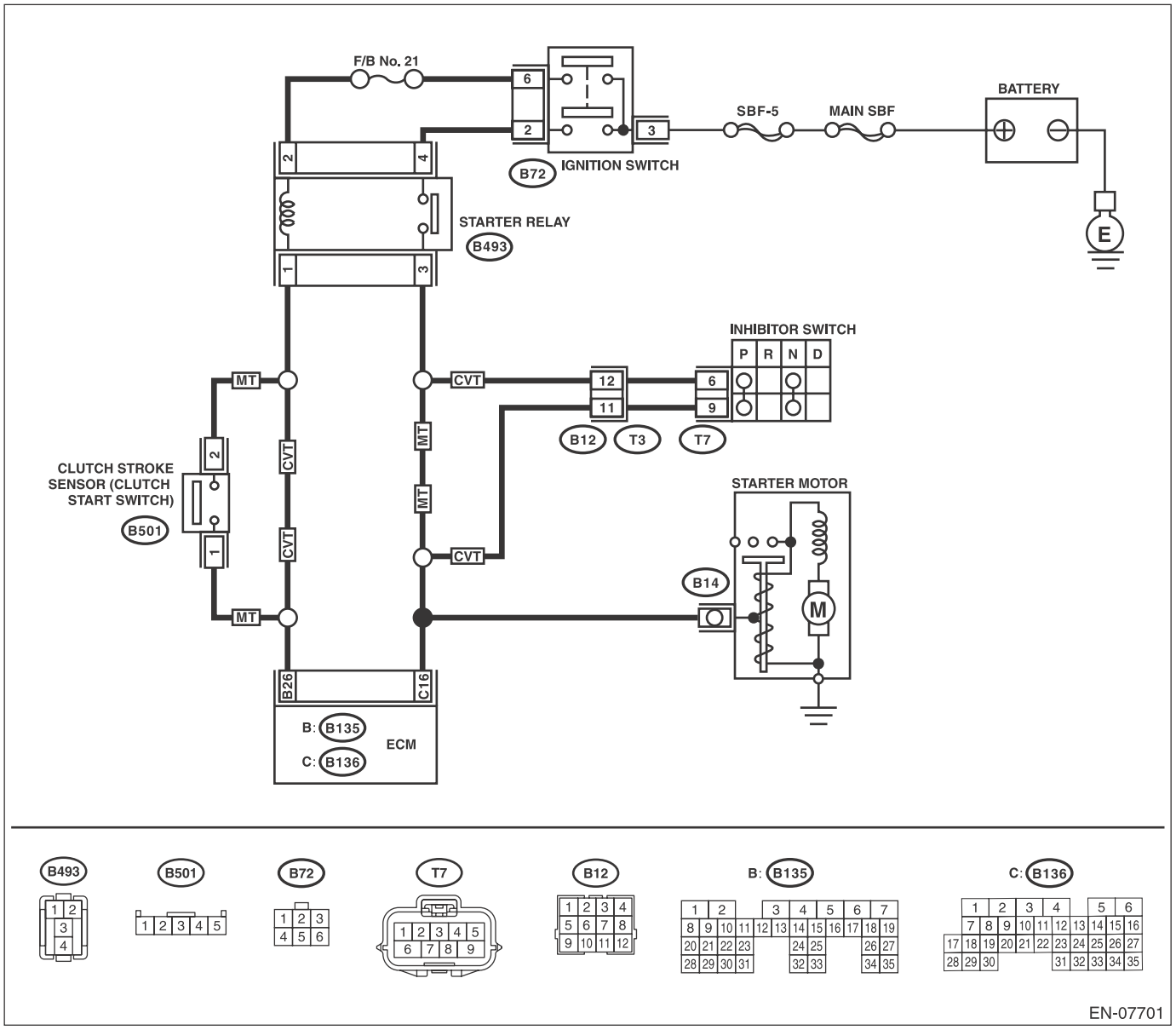

Step		Check	Yes	No
1	**CHECK BATTERY.** Check the battery voltage.	Is the voltage 12 V or more?	Go to step **2**.	Charge or replace the battery.
2	**CHECK OPERATION OF STARTER MOTOR.** NOTE: Make sure the security alarm does not sound.	Does the starter motor operate?	Go to step **3**.	Go to step **4**.

	Step	Check	Yes	No
3	**CHECK DTC.**	Is DTC displayed? <Ref. to EN(H4SO)(diag)-41, OPERATION, Read Diagnostic Trouble Code (DTC).>	Check the appropriate DTC using the "List of Diagnostic Trouble Code (DTC)". <Ref. to EN(H4SO)(diag)-79, List of Diagnostic Trouble Code (DTC).>	The circuit has returned to a normal condition at this time. Reproduce the failure, and then perform the diagnosis again. NOTE: In this case, temporary poor contact of connector, temporary open or short circuit of harness may be the cause.
4	**CHECK INPUT SIGNAL FOR STARTER MOTOR.** 1) Turn the ignition switch to OFF. 2) Disconnect the connector from starter motor. 3) Turn the ignition switch to START. 4) Measure the voltage between the starter motor connector and the engine ground. ***Connector & terminal*** ***(B14) No. 1 (+) — Engine ground (–):*** NOTE: For CVT model, place the select lever in "P" range or "N" range. For MT model, depress the clutch pedal.	Is the voltage 10 V or more?	Check the starter motor. <Ref. to SC(H4SO)-9, Starter.>	Go to step **5**.
5	**CHECK HARNESS BETWEEN BATTERY AND IGNITION SWITCH CONNECTOR.** 1) Turn the ignition switch to OFF. 2) Disconnect the connector from ignition switch. 3) Measure the voltage between ignition switch connector and chassis ground. ***Connector & terminal*** ***(B72) No. 3 (+) — Chassis ground (–):***	Is the voltage 10 V or more?	Go to step **6**.	Repair the power supply circuit.
6	**CHECK IGNITION SWITCH.** Measure the resistance between ignition switch terminals after turning the ignition switch to START position. ***Terminals*** ***No. 3 — No. 2:*** ***No. 3 — No. 6:***	Is the resistance less than 1 Ω?	Go to step **7**.	Replace the ignition switch. <Ref. to SL-59, REPLACEMENT, Ignition Key Lock.>
7	**CHECK INPUT VOLTAGE OF STARTER RELAY.** 1) Turn the ignition switch to OFF. 2) Remove the starter relay. 3) Connect the connector to ignition switch. 4) Measure the input voltage between starter relay connector and chassis ground after turning the ignition switch to START position. ***Connector & terminal*** ***(B493) No. 2 (+) — Chassis ground (–):*** ***(B493) No. 4 (+) — Chassis ground (–):***	Is the voltage 10 V or more?	Go to step **8**.	Repair open or short circuit to ground in harness between starter relay and ignition switch connector.

	Step	Check	Yes	No
8	**CHECK STARTER RELAY.** 1) Connect the battery to starter relay terminals No. 1 and No. 2. 2) Measure the resistance between starter relay terminals. ***Terminals*** ***No. 3 — No. 4:***	Is the resistance less than 1 Ω?	Go to step **9**.	Replace the starter relay. <Ref. to EN(H4SO)(diag)-9, Electrical Component Location.>
9	**CHECK HARNESS BETWEEN ECM AND STARTER RELAY CONNECTOR.** 1) Turn the ignition switch to OFF. 2) Disconnect the connector from ECM. 3) Measure the resistance of harness connector between ECM and starter relay. ***Connector & terminal*** ***(B493) No. 1 — (B135) No. 26:***	Is the resistance less than 1 Ω?	Go to step **10**.	Repair the open circuit of harness between ECM and starter relay connector.
10	**CHECK TRANSMISSION TYPE.**	Is the transmission type CVT?	Go to step **11**.	Go to step **15**.
11	**CHECK ECM INPUT VOLTAGE.** 1) Turn the ignition switch to START. 2) Measure the input voltage between ECM and chassis ground. ***Connector & terminal*** ***(B135) No. 26 (+) — Chassis ground (–):***	Is the voltage 10 V or more?	Go to step **12**.	Repair the open circuit of harness between ECM and ignition switch connector.
12	**CHECK HARNESS BETWEEN STARTER RELAY AND INHIBITOR SWITCH CONNECTOR.** 1) Turn the ignition switch to OFF. 2) Disconnect the connector from inhibitor switch. 3) Measure the resistance of harness between the starter relay and inhibitor switch. ***Connector & terminal*** ***(B493) No. 3 — (T7) No. 6:***	Is the resistance less than 1 Ω?	Go to step **13**.	Repair the harness and connector. NOTE: In this case, repair the following item: • Open circuit in harness between starter relay connector and inhibitor switch connector • Poor contact of coupling connector
13	**CHECK HARNESS BETWEEN INHIBITOR SWITCH AND STARTER MOTOR.** Measure the resistance of harness between the inhibitor switch and starter motor. ***Connector & terminal*** ***(T7) No. 9 — (B14) No. 1:***	Is the resistance less than 1 Ω?	Go to step **14**.	Repair the harness and connector. NOTE: In this case, repair the following item: • Open circuit in harness between inhibitor switch connector and starter motor • Poor contact of coupling connector
14	**CHECK INHIBITOR SWITCH.** 1) Place the select lever in “P” range or “N” range. 2) Measure the resistance between inhibitor switch terminals. ***Terminals*** ***No. 6 — No. 9:***	Is the resistance less than 1 Ω?	Check the ECM power supply and ground line. <Ref. to EN(H4SO)(diag)-71, CHECK POWER SUPPLY AND GROUND LINE OF ENGINE CONTROL MODULE (ECM), Diagnostics for Engine Starting Failure.>	Replace the inhibitor switch. <Ref. to CVT-94, Inhibitor Switch.>

	Step	Check	Yes	No
15	**CHECK HARNESS BETWEEN IGNITION SWITCH AND CLUTCH STROKE SENSOR CONNECTOR.** 1) Turn the ignition switch to OFF. 2) Disconnect the connector from clutch stroke sensor. 3) Turn the ignition switch to START. 4) Measure the voltage between clutch stroke sensor connector and chassis ground. ***Connector & terminal*** ***(B501) No. 2 (+) — Chassis ground (–):***	Is the voltage 10 V or more?	Go to step **16**.	Repair the open circuit in harness between ignition switch connector and clutch stroke sensor connector.
16	**CHECK CLUTCH STROKE SENSOR.** Measure the resistance between clutch stroke sensor terminals while depressing the clutch. ***Terminals*** ***No. 1 — No. 2:***	Is the resistance less than 1 Ω?	Go to step **17**.	Replace the clutch stroke sensor. <Ref. to PB(diag)-10, Electrical Component Location.>
17	**CHECK HARNESS BETWEEN ECM AND CLUTCH STROKE SENSOR CONNECTOR.** Measure the resistance of harness between ECM and clutch stroke sensor connector. ***Connector & terminal*** ***(B135) No. 26 — (B501) No. 1:***	Is the resistance less than 1 Ω?	Go to step **18**.	Repair the open circuit of harness between ECM and clutch stroke sensor connector.
18	**CHECK HARNESS BETWEEN STARTER RELAY AND STARTER MOTOR.** Measure the resistance of harness between starter relay connector and starter motor. ***Connector & terminal*** ***(B493) No. 3 — (B14) No. 1:***	Is the resistance less than 1 Ω?	Check the ECM power supply and ground line. <Ref. to EN(H4SO)(diag)-71, CHECK POWER SUPPLY AND GROUND LINE OF ENGINE CONTROL MODULE (ECM), Diagnostics for Engine Starting Failure.>	Repair the open circuit of the harness between starter relay connector and starter motor.

C: CHECK POWER SUPPLY AND GROUND LINE OF ENGINE CONTROL MODULE (ECM)

CAUTION:
After servicing or replacing faulty parts, perform Clear Memory Mode <Ref. to EN(H4SO)(diag)-54, OPERATION, Clear Memory Mode.>, and Inspection Mode <Ref. to EN(H4SO)(diag)-42, PROCEDURE, Inspection Mode.>.
WIRING DIAGRAM:

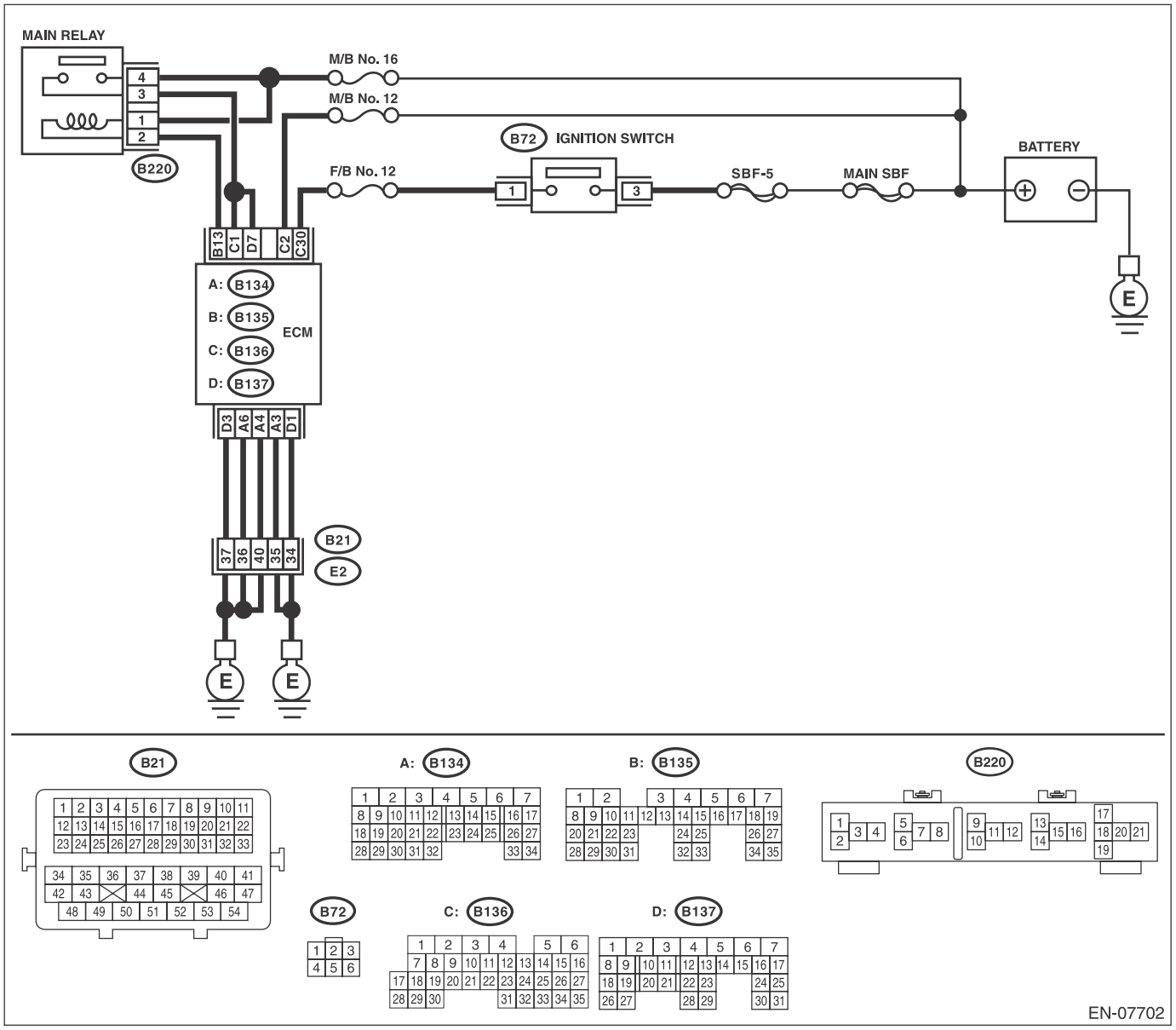

Step		Check	Yes	No
1	**CHECK MAIN RELAY.** 1) Turn the ignition switch to OFF. 2) Remove the main relay. 3) Connect the battery to main relay terminals No. 1 and No. 2. 4) Measure the resistance between main relay terminals. ***Terminals*** ***No. 3 — No. 4:***	Is the resistance less than 1 Ω?	Go to step **2**.	Replace the main relay. <Ref. to FU(H4SO)-40, Main Relay.>

	Step	Check	Yes	No
2	**CHECK GROUND CIRCUIT FOR ECM.** 1) Disconnect the connector from ECM. 2) Measure the resistance of harness between ECM and chassis ground. ***Connector & terminal*** ***(B134) No. 3 — Chassis ground:*** ***(B134) No. 4 — Chassis ground:*** ***(B134) No. 6 — Chassis ground:*** ***(B137) No. 1 — Chassis ground:*** ***(B137) No. 3 — Chassis ground:***	Is the resistance less than 5 Ω?	Go to step **3**.	Repair the harness and connector. NOTE: In this case, repair the following item: • Open circuit in harness between ECM and engine ground terminal • Poor contact of coupling connector
3	**CHECK INPUT VOLTAGE OF ECM.** 1) Turn the ignition switch to ON. 2) Measure the voltage between ECM and chassis ground. ***Connector & terminal*** ***(B136) No. 2 (+) — Chassis ground (–):*** ***(B136) No. 30 (+) — Chassis ground (–):***	Is the voltage 10 V or more?	Go to step **4**.	Repair the open or ground short circuit of harness of power supply circuit.
4	**CHECK INPUT VOLTAGE OF MAIN RELAY.** Measure the voltage between main relay connector and chassis ground. ***Connector & terminal*** ***(B220) No. 1 (+) — Chassis ground (–):*** ***(B220) No. 4 (+) — Chassis ground (–):***	Is the voltage 10 V or more?	Go to step **5**.	Repair the open or ground short circuit of harness of power supply circuit.
5	**CHECK INPUT VOLTAGE OF ECM.** 1) Turn the ignition switch to OFF. 2) Install the main relay. 3) Turn the ignition switch to ON. 4) Measure the voltage between ECM and chassis ground. ***Connector & terminal*** ***(B135) No. 13 (+) — Chassis ground (–):***	Is the voltage 10 V or more?	Go to step **6**.	Repair the open circuit in harness between ECM and main relay connector.
6	**CHECK INPUT VOLTAGE OF ECM.** 1) Turn the ignition switch to OFF. 2) Connect the connector to ECM. 3) Turn the ignition switch to ON. 4) Measure the voltage between ECM and chassis ground. ***Connector & terminal*** ***(B136) No. 1 (+) — Chassis ground (–):*** ***(B137) No. 7 (+) — Chassis ground (–):***	Is the voltage 10 V or more?	Check ignition control system. <Ref. to EN(H4SO)(diag)-73, IGNITION CONTROL SYSTEM, Diagnostics for Engine Starting Failure.>	Repair the harness and connector. NOTE: In this case, repair the following item: • Open circuit in harness between ECM and main relay connector • Poor contact of main relay connector • Poor contact of ECM connector

D: IGNITION CONTROL SYSTEM

CAUTION:
After servicing or replacing faulty parts, perform Clear Memory Mode <Ref. to EN(H4SO)(diag)-54, Clear Memory Mode.>, and Inspection Mode <Ref. to EN(H4SO)(diag)-42, Inspection Mode.>.
WIRING DIAGRAM:

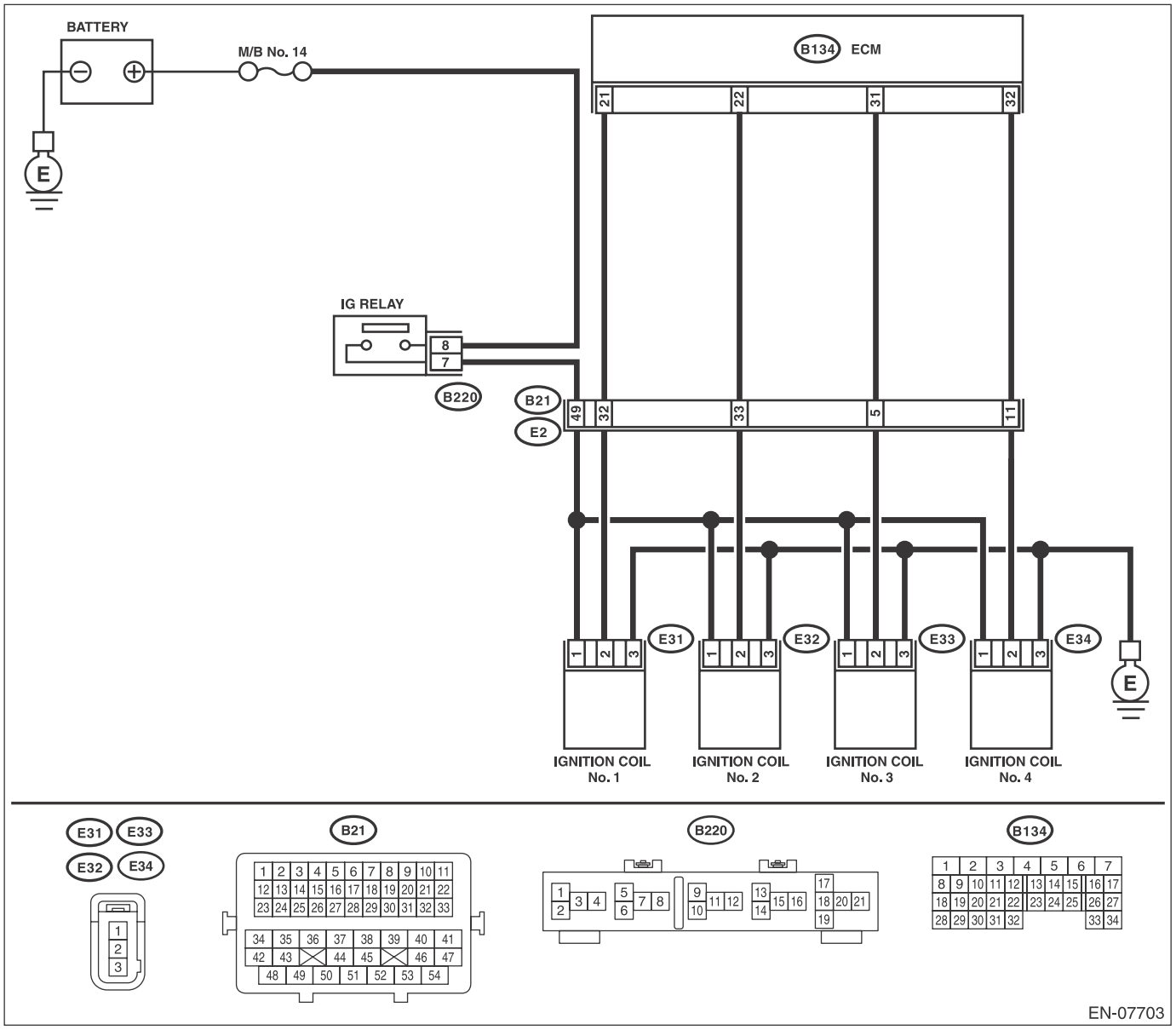

Step		Check	Yes	No
1	**CHECK SPARK PLUG CONDITION.** 1) Remove the spark plug. <Ref. to IG(H4SO)-3, REMOVAL, Spark Plug.> 2) Check the spark plug condition. <Ref. to IG(H4SO)-3, INSPECTION, Spark Plug.>	Is the spark plug condition normal?	Go to step **2**.	Replace the spark plug. <Ref. to IG(H4SO)-3, Spark Plug.>

	Step	Check	Yes	No
2	**CHECK IGNITION SYSTEM FOR SPARKS.** 1) Connect the spark plug to ignition coil. 2) Release the fuel pressure. <Ref. to FU(H4SO)-46, RELEASING OF FUEL PRESSURE, PROCEDURE, Fuel.> 3) Contact the spark plug thread portion to engine. 4) While opening the throttle valve fully, crank the engine to check that spark occurs at each cylinder.	Does spark occur at each cylinder?	Check fuel pump system. <Ref. to EN(H4SO)(diag)-75, FUEL PUMP CIRCUIT, Diagnostics for Engine Starting Failure.>	Go to step **3**.
3	**CHECK IGNITION COIL POWER SUPPLY CIRCUIT.** 1) Turn the ignition switch to OFF. 2) Disconnect the connector from ignition coil. 3) Turn the ignition switch to ON. 4) Measure the voltage between ignition coil connector and engine ground. ***Connector & terminal*** ***(E31) No. 1 (+) — Engine ground (–):*** ***(E32) No. 1 (+) — Engine ground (–):*** ***(E33) No. 1 (+) — Engine ground (–):*** ***(E34) No. 1 (+) — Engine ground (–):***	Is the voltage 10 V or more?	Go to step **4**.	Repair the harness and connector. NOTE: In this case, repair the following item: • Open circuit or short circuit to ground in harness of power supply circuit • Poor contact of coupling connector • Blown out of fuse (M/B No. 14)
4	**CHECK HARNESS OF IGNITION COIL GROUND CIRCUIT.** 1) Turn the ignition switch to OFF. 2) Measure the resistance of harness between ignition coil connector and engine ground. ***Connector & terminal*** ***(E31) No. 3 — Engine ground:*** ***(E32) No. 3 — Engine ground:*** ***(E33) No. 3 — Engine ground:*** ***(E34) No. 3 — Engine ground:***	Is the resistance less than 5 Ω?	Go to step **5**.	Repair the open circuit in harness between ignition coil connector and engine grounding terminal.
5	**CHECK HARNESS BETWEEN ECM AND IGNITION COIL CONNECTOR.** 1) Disconnect the connector from ECM. 2) Measure the resistance of harness between ECM and ignition coil connector. ***Connector & terminal*** ***(B134) No. 21 — (E31) No. 2:*** ***(B134) No. 22 — (E32) No. 2:*** ***(B134) No. 31 — (E33) No. 2:*** ***(B134) No. 32 — (E34) No. 2:***	Is the resistance less than 1 Ω?	Go to step **6**.	Repair the harness and connector. NOTE: In this case, repair the following item: • Open circuit of harness between ECM and ignition coil connector • Poor contact of coupling connector
6	**CHECK HARNESS BETWEEN ECM AND IGNITION COIL CONNECTOR.** Measure the resistance of harness between ECM and engine ground. ***Connector & terminal:*** ***(B134) No. 21 — Engine ground:*** ***(B134) No. 22 — Engine ground:*** ***(B134) No. 31 — Engine ground:*** ***(B134) No. 32 — Engine ground:***	Is the resistance 1 MΩ or more?	Go to step **7**.	Repair the ground short circuit of harness between ECM and ignition coil connector.
7	**CHECK FOR POOR CONTACT.** Check for poor contact of ECM connector.	Is there poor contact of ECM connector?	Repair the poor contact of ECM connector.	Replace the ignition coil. <Ref. to IG(H4SO)-5, Ignition Coil.>

E: FUEL PUMP CIRCUIT

CAUTION:
After servicing or replacing faulty parts, perform Clear Memory Mode <Ref. to EN(H4SO)(diag)-54, OPERATION, Clear Memory Mode.>, and Inspection Mode <Ref. to EN(H4SO)(diag)-42, PROCEDURE, Inspection Mode.>.
WIRING DIAGRAM:

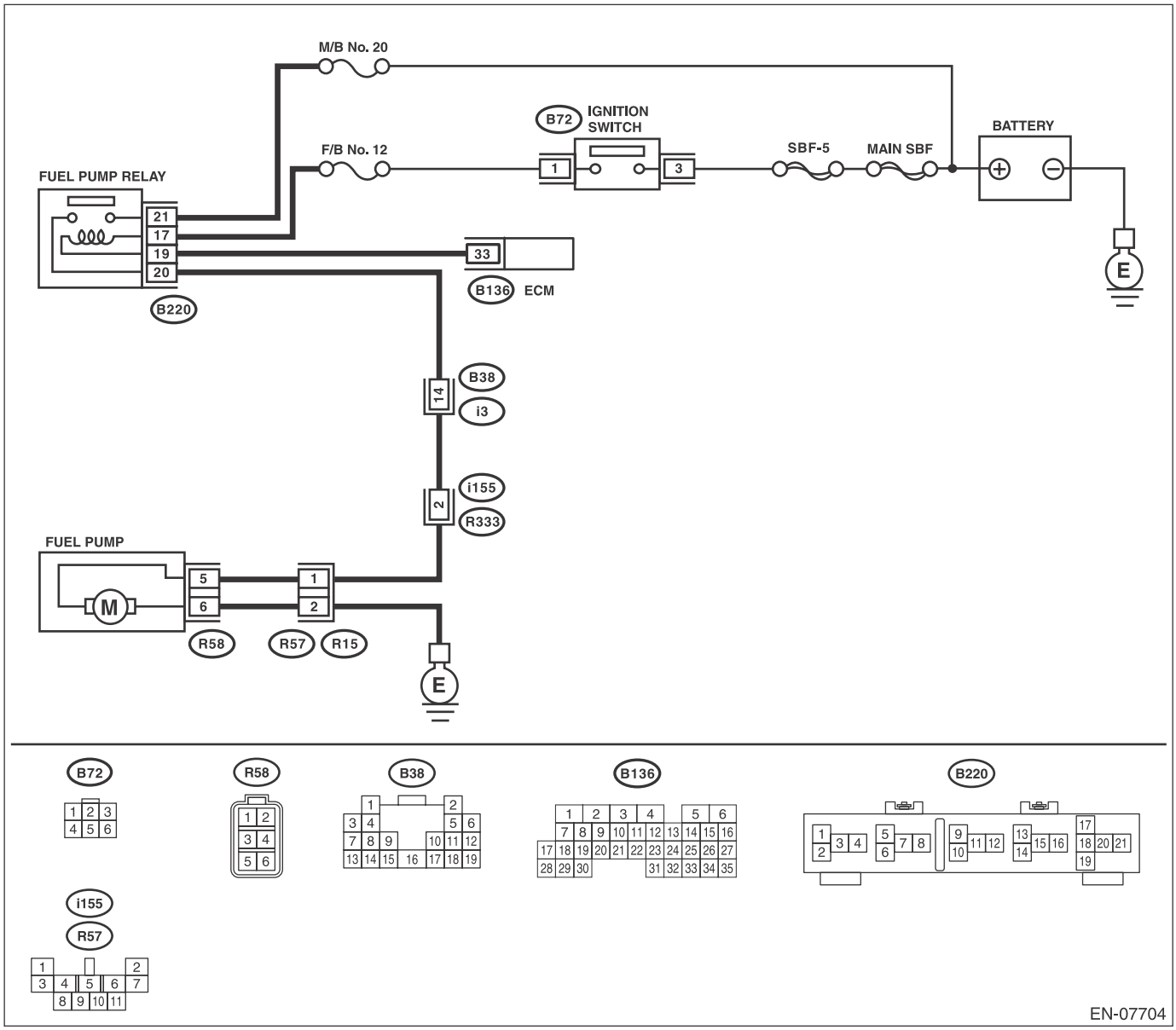

	Step	Check	Yes	No
1	**CHECK OPERATING SOUND OF FUEL PUMP.** Check if the fuel pump operates for two seconds when turning the ignition switch to ON. NOTE: Fuel pump operation can be executed using the Subaru Select Monitor. For detailed procedures, refer to "SYSTEM OPERATION CHECK MODE". <Ref. to EN(H4SO)(diag)-55, System Operation Check Mode.>	Does the fuel pump emit operating sound?	Check the fuel injector circuit. <Ref. to EN(H4SO)(diag)-77, FUEL INJECTOR CIRCUIT, Diagnostics for Engine Starting Failure.>	Go to step **2**.

	Step	Check	Yes	No
2	**CHECK GROUND CIRCUIT OF FUEL PUMP.** 1) Turn the ignition switch to OFF. 2) Remove the fuel pump access hole lid. 3) Disconnect the connector from fuel pump. 4) Measure the resistance of harness connector between fuel pump and chassis ground. ***Connector & terminal*** ***(R58) No. 6 — Chassis ground:***	Is the resistance less than 5 Ω?	Go to step **3**.	Repair the harness and connector. NOTE: In this case, repair the following item: • Open circuit in harness between fuel pump connector and chassis grounding terminal • Poor contact of coupling connector
3	**CHECK POWER SUPPLY TO FUEL PUMP.** 1) Turn the ignition switch to ON. 2) Measure the voltage between fuel pump connector and chassis ground. ***Connector & terminal*** ***(R58) No. 5 (+) — Chassis ground (–):***	Is the voltage 10 V or more?	Replace the fuel pump. <Ref. to FU(H4SO)-58, Fuel Pump.>	Go to step **4**.
4	**CHECK HARNESS BETWEEN FUEL PUMP AND FUEL PUMP RELAY CONNECTOR.** 1) Turn the ignition switch to OFF. 2) Measure the resistance of harness between fuel pump connector and fuel pump relay connector. ***Connector & terminal*** ***(R58) No. 5 — (B220) No. 20:***	Is the resistance less than 1 Ω?	Go to step **5**.	Repair the harness and connector. NOTE: In this case, repair the following item: • Open circuit in harness between fuel pump connector and fuel pump relay connector • Poor contact of coupling connector
5	**CHECK HARNESS BETWEEN FUEL PUMP AND FUEL PUMP RELAY CONNECTOR.** Measure the resistance of harness between fuel pump and fuel pump relay connector. ***Connector & terminal*** ***(R58) No. 5 — Chassis ground:***	Is the resistance 1 MΩ or more?	Go to step **6**.	Repair the short circuit to ground in harness between fuel pump connector and fuel pump relay connector.
6	**CHECK FUEL PUMP RELAY.** 1) Remove the fuel pump relay. 2) Connect the battery to fuel pump relay terminals No. 17 and No. 19. 3) Measure the resistance between terminals of fuel pump relay. ***Terminals*** ***No. 20 — No. 21:***	Is the resistance less than 1 Ω?	Go to step **7**.	Replace the fuel pump relay. <Ref. to FU(H4SO)-42, Fuel Pump Relay.>
7	**CHECK HARNESS BETWEEN ECM AND FUEL PUMP RELAY CONNECTOR.** 1) Disconnect the connector from ECM. 2) Measure the resistance of harness between ECM and fuel pump relay connector. ***Connector & terminal*** ***(B136) No. 33 — (B220) No. 19:***	Is the resistance less than 1 Ω?	Go to step **8**.	Repair the open circuit of harness between ECM and fuel pump relay connector.
8	**CHECK POWER SUPPLY OF FUEL PUMP RELAY.** 1) Turn the ignition switch to ON. 2) Measure the voltage between fuel pump relay connector and chassis ground. ***Connector & terminal*** ***(B220) No. 17 (+) — Chassis ground (–):*** ***(B220) No. 21 (+) — Chassis ground (–):***	Is the voltage 10 V or more?	Repair the poor contact of ECM connector.	Repair the open or ground short circuit of harness of power supply circuit.

F: FUEL INJECTOR CIRCUIT

CAUTION:
- **Check or repair only faulty parts.**
- **After servicing or replacing faulty parts, perform Clear Memory Mode <Ref. to EN(H4SO)(diag)-54, OPERATION, Clear Memory Mode.>, and Inspection Mode <Ref. to EN(H4SO)(diag)-42, PROCEDURE, Inspection Mode.>.**

WIRING DIAGRAM:

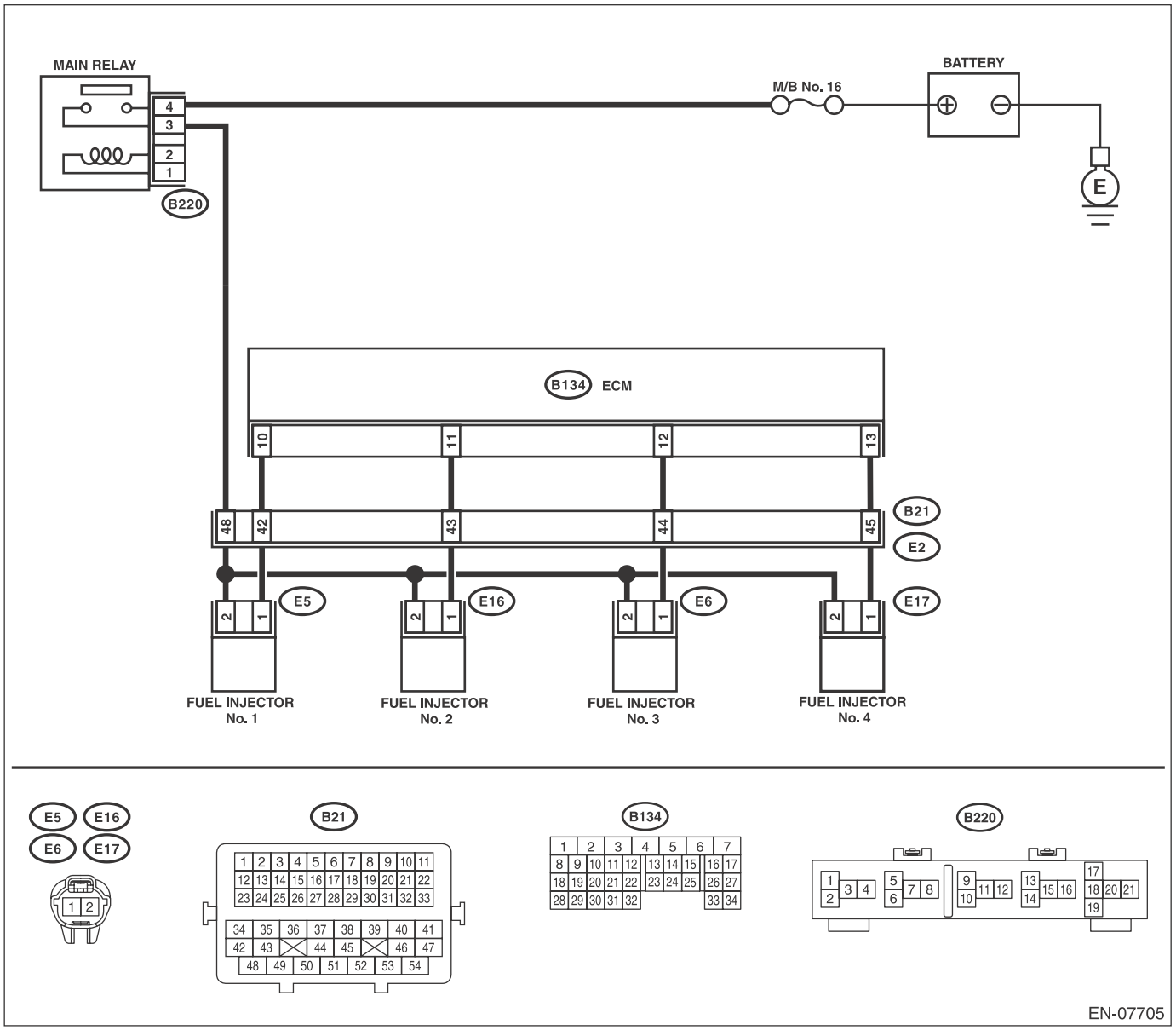

Step		Check	Yes	No
1	**CHECK OPERATION OF EACH FUEL INJECTOR.** While cranking the engine, check each fuel injector emits operating sound. Use a sound scope or attach a screwdriver to the injector to listen to sounds for this check.	Does the fuel pump emit operating sound?	Check the fuel pressure. <Ref. to ME(H4SO)-28, INSPECTION, Fuel Pressure.>	Go to step **2**.

	Step	Check	Yes	No
2	**CHECK POWER SUPPLY TO EACH FUEL INJECTOR.** 1) Turn the ignition switch to OFF. 2) Disconnect the connector from fuel injector. 3) Turn the ignition switch to ON. 4) Measure the voltage between fuel injector connector and the engine ground. ***Connector & terminal*** ***#1 (E5) No. 2 (+) — Engine ground (–):*** ***#2 (E16) No. 2 (+) — Engine ground (–):*** ***#3 (E6) No. 2 (+) — Engine ground (–):*** ***#4 (E17) No. 2 (+) — Engine ground (–):***	Is the voltage 10 V or more?	Go to step **3**.	Repair the harness and connector. NOTE: In this case, repair the following item: • Open circuit in harness between main relay connector and fuel injector connector • Poor contact of main relay connector • Poor contact of coupling connector
3	**CHECK HARNESS BETWEEN ECM AND FUEL INJECTOR CONNECTOR.** 1) Turn the ignition switch to OFF. 2) Disconnect the connector from ECM. 3) Measure the resistance of harness between ECM and fuel injector connector. ***Connector & terminal*** ***#1 (B134) No. 10 — (E5) No. 1:*** ***#2 (B134) No. 11 — (E16) No. 1:*** ***#3 (B134) No. 12 — (E6) No. 1:*** ***#4 (B134) No. 13 — (E17) No. 1:***	Is the resistance less than 1 Ω?	Go to step **4**.	Repair the harness and connector. NOTE: In this case, repair the following item: • Open circuit in harness between ECM and fuel injector connector • Poor contact of coupling connector
4	**CHECK HARNESS BETWEEN ECM AND FUEL INJECTOR CONNECTOR.** Measure the resistance between ECM and chassis ground. ***Connector & terminal*** ***#1 (B134) No. 10 — Chassis ground:*** ***#2 (B134) No. 11 — Chassis ground:*** ***#3 (B134) No. 12 — Chassis ground:*** ***#4 (B134) No. 13 — Chassis ground:***	Is the resistance 1 MΩ or more?	Go to step **5**.	Repair the ground short circuit of harness between ECM and fuel injector connector.
5	**CHECK EACH FUEL INJECTOR.** Measure the resistance between each fuel injector terminals. ***Terminals*** ***No. 1 — No. 2:***	Is the resistance 5 — 20 Ω?	Go to step **6**.	Replace the faulty fuel injector. <Ref. to FU(H4SO)-32, Fuel Injector.>
6	**CHECK FOR POOR CONTACT.** Check for poor contact of ECM connector.	Is there poor contact of ECM connector?	Repair the poor contact of ECM connector.	Inspection using “General Diagnostic Table”<Ref. to EN(H4SO)(diag)-300, INSPECTION, General Diagnostic Table.>

17.List of Diagnostic Trouble Code (DTC)

A: LIST

DTC	Item	Index
P0026	Intake Valve Control Solenoid Circuit Range/Performance (Bank 1)	<Ref. to EN(H4SO)(diag)-86, DTC P0026 INTAKE VALVE CONTROL SOLENOID CIRCUIT RANGE/PERFORMANCE (BANK 1), Diagnostic Procedure with Diagnostic Trouble Code (DTC).>
P0028	Intake Valve Control Solenoid Circuit Range/Performance (Bank 2)	<Ref. to EN(H4SO)(diag)-88, DTC P0028 INTAKE VALVE CONTROL SOLENOID CIRCUIT RANGE/PERFORMANCE (BANK 2), Diagnostic Procedure with Diagnostic Trouble Code (DTC).>
P0030	HO2S Heater Control Circuit (Bank 1 Sensor 1)	<Ref. to EN(H4SO)(diag)-90, DTC P0030 HO2S HEATER CONTROL CIRCUIT (BANK 1 SENSOR 1), Diagnostic Procedure with Diagnostic Trouble Code (DTC).>
P0031	HO2S Heater Control Circuit Low (Bank 1 Sensor 1)	<Ref. to EN(H4SO)(diag)-92, DTC P0031 HO2S HEATER CONTROL CIRCUIT LOW (BANK 1 SENSOR 1), Diagnostic Procedure with Diagnostic Trouble Code (DTC).>
P0032	HO2S Heater Control Circuit High (Bank 1 Sensor 1)	<Ref. to EN(H4SO)(diag)-94, DTC P0032 HO2S HEATER CONTROL CIRCUIT HIGH (BANK 1 SENSOR 1), Diagnostic Procedure with Diagnostic Trouble Code (DTC).>
P0037	HO2S Heater Control Circuit Low (Bank 1 Sensor 2)	<Ref. to EN(H4SO)(diag)-96, DTC P0037 HO2S HEATER CONTROL CIRCUIT LOW (BANK 1 SENSOR 2), Diagnostic Procedure with Diagnostic Trouble Code (DTC).>
P0038	HO2S Heater Control Circuit High (Bank 1 Sensor 2)	<Ref. to EN(H4SO)(diag)-98, DTC P0038 HO2S HEATER CONTROL CIRCUIT HIGH (BANK 1 SENSOR 2), Diagnostic Procedure with Diagnostic Trouble Code (DTC).>
P0068	MAP/MAF - Throttle Position Correlation	<Ref. to EN(H4SO)(diag)-100, DTC P0068 MAP/MAF - THROTTLE POSITION CORRELATION, Diagnostic Procedure with Diagnostic Trouble Code (DTC).>
P0076	Intake Valve Control Solenoid Circuit Low (Bank 1)	<Ref. to EN(H4SO)(diag)-102, DTC P0076 INTAKE VALVE CONTROL SOLENOID CIRCUIT LOW (BANK 1), Diagnostic Procedure with Diagnostic Trouble Code (DTC).>
P0077	Intake Valve Control Solenoid Circuit High (Bank 1)	<Ref. to EN(H4SO)(diag)-104, DTC P0077 INTAKE VALVE CONTROL SOLENOID CIRCUIT HIGH (BANK 1), Diagnostic Procedure with Diagnostic Trouble Code (DTC).>
P0082	Intake Valve Control Solenoid Circuit Low (Bank 2)	<Ref. to EN(H4SO)(diag)-106, DTC P0082 INTAKE VALVE CONTROL SOLENOID CIRCUIT LOW (BANK 2), Diagnostic Procedure with Diagnostic Trouble Code (DTC).>
P0083	Intake Valve Control Solenoid Circuit High (Bank 2)	<Ref. to EN(H4SO)(diag)-108, DTC P0083 INTAKE VALVE CONTROL SOLENOID CIRCUIT HIGH (BANK 2), Diagnostic Procedure with Diagnostic Trouble Code (DTC).>
P0101	Mass or Volume Air Flow Circuit Range/Performance	<Ref. to EN(H4SO)(diag)-110, DTC P0101 MASS OR VOLUME AIR FLOW CIRCUIT RANGE/PERFORMANCE, Diagnostic Procedure with Diagnostic Trouble Code (DTC).>
P0102	Mass or Volume Air Flow Circuit Low Input	<Ref. to EN(H4SO)(diag)-112, DTC P0102 MASS OR VOLUME AIR FLOW CIRCUIT LOW INPUT, Diagnostic Procedure with Diagnostic Trouble Code (DTC).>
P0103	Mass or Volume Air Flow Circuit High Input	<Ref. to EN(H4SO)(diag)-114, DTC P0103 MASS OR VOLUME AIR FLOW CIRCUIT HIGH INPUT, Diagnostic Procedure with Diagnostic Trouble Code (DTC).>
P0107	Manifold Absolute Pressure/Barometric Pressure Circuit Low Input	<Ref. to EN(H4SO)(diag)-116, DTC P0107 MANIFOLD ABSOLUTE PRESSURE/BAROMETRIC PRESSURE CIRCUIT LOW INPUT, Diagnostic Procedure with Diagnostic Trouble Code (DTC).>
P0108	Manifold Absolute Pressure/Barometric Pressure Circuit High Input	<Ref. to EN(H4SO)(diag)-118, DTC P0108 MANIFOLD ABSOLUTE PRESSURE/BAROMETRIC PRESSURE CIRCUIT HIGH INPUT, Diagnostic Procedure with Diagnostic Trouble Code (DTC).>

DTC	Item	Index
P0111	Intake Air Temperature Sensor 1 Circuit Range/Performance	<Ref. to EN(H4SO)(diag)-120, DTC P0111 INTAKE AIR TEMPERATURE SENSOR 1 CIRCUIT RANGE/PERFORMANCE, Diagnostic Procedure with Diagnostic Trouble Code (DTC).>
P0112	Intake Air Temperature Sensor 1 Circuit Low	<Ref. to EN(H4SO)(diag)-122, DTC P0112 INTAKE AIR TEMPERATURE SENSOR 1 CIRCUIT LOW, Diagnostic Procedure with Diagnostic Trouble Code (DTC).>
P0113	Intake Air Temperature Sensor 1 Circuit High	<Ref. to EN(H4SO)(diag)-124, DTC P0113 INTAKE AIR TEMPERATURE SENSOR 1 CIRCUIT HIGH, Diagnostic Procedure with Diagnostic Trouble Code (DTC).>
P0117	Engine Coolant Temperature Circuit Low	<Ref. to EN(H4SO)(diag)-126, DTC P0117 ENGINE COOLANT TEMPERATURE CIRCUIT LOW, Diagnostic Procedure with Diagnostic Trouble Code (DTC).>
P0118	Engine Coolant Temperature Circuit High	<Ref. to EN(H4SO)(diag)-128, DTC P0118 ENGINE COOLANT TEMPERATURE CIRCUIT HIGH, Diagnostic Procedure with Diagnostic Trouble Code (DTC).>
P0122	Throttle/Pedal Position Sensor/Switch “A” Circuit Low	<Ref. to EN(H4SO)(diag)-130, DTC P0122 THROTTLE/PEDAL POSITION SENSOR/SWITCH “A” CIRCUIT LOW, Diagnostic Procedure with Diagnostic Trouble Code (DTC).>
P0123	Throttle/Pedal Position Sensor/Switch “A” Circuit High	<Ref. to EN(H4SO)(diag)-132, DTC P0123 THROTTLE/PEDAL POSITION SENSOR/SWITCH “A” CIRCUIT HIGH, Diagnostic Procedure with Diagnostic Trouble Code (DTC).>
P0125	Insufficient Coolant Temperature for Closed Loop Fuel Control	<Ref. to EN(H4SO)(diag)-134, DTC P0125 INSUFFICIENT COOLANT TEMPERATURE FOR CLOSED LOOP FUEL CONTROL, Diagnostic Procedure with Diagnostic Trouble Code (DTC).>
P0126	Insufficient Engine Coolant Temperature for Stable Operation	<Ref. to EN(H4SO)(diag)-135, DTC P0126 INSUFFICIENT ENGINE COOLANT TEMPERATURE FOR STABLE OPERATION, Diagnostic Procedure with Diagnostic Trouble Code (DTC).>
P0128	Coolant Thermostat (Engine Coolant Temperature Below Thermostat Regulating Temperature)	<Ref. to EN(H4SO)(diag)-137, DTC P0128 COOLANT THERMOSTAT (ENGINE COOLANT TEMPERATURE BELOW THERMOSTAT REGULATING TEMPERATURE), Diagnostic Procedure with Diagnostic Trouble Code (DTC).>
P0131	O2 Sensor Circuit Low Voltage (Bank 1 Sensor 1)	<Ref. to EN(H4SO)(diag)-138, DTC P0131 O2 SENSOR CIRCUIT LOW VOLTAGE (BANK 1 SENSOR 1), Diagnostic Procedure with Diagnostic Trouble Code (DTC).>
P0132	O2 Sensor Circuit High Voltage (Bank 1 Sensor 1)	<Ref. to EN(H4SO)(diag)-140, DTC P0132 O2 SENSOR CIRCUIT HIGH VOLTAGE (BANK 1 SENSOR 1), Diagnostic Procedure with Diagnostic Trouble Code (DTC).>
P0133	O2 Sensor Circuit Slow Response (Bank 1 Sensor 1)	<Ref. to EN(H4SO)(diag)-142, DTC P0133 O2 SENSOR CIRCUIT SLOW RESPONSE (BANK 1 SENSOR 1), Diagnostic Procedure with Diagnostic Trouble Code (DTC).>
P0134	O2 Sensor Circuit No Activity Detected (Bank 1 Sensor 1)	<Ref. to EN(H4SO)(diag)-144, DTC P0134 O2 SENSOR CIRCUIT NO ACTIVITY DETECTED (BANK 1 SENSOR 1), Diagnostic Procedure with Diagnostic Trouble Code (DTC).>
P0137	O2 Sensor Circuit Low Voltage (Bank 1 Sensor 2)	<Ref. to EN(H4SO)(diag)-146, DTC P0137 O2 SENSOR CIRCUIT LOW VOLTAGE (BANK 1 SENSOR 2), Diagnostic Procedure with Diagnostic Trouble Code (DTC).>
P0138	O2 Sensor Circuit High Voltage (Bank 1 Sensor 2)	<Ref. to EN(H4SO)(diag)-148, DTC P0138 O2 SENSOR CIRCUIT HIGH VOLTAGE (BANK 1 SENSOR 2), Diagnostic Procedure with Diagnostic Trouble Code (DTC).>
P0139	O2 Sensor Circuit Slow Response (Bank 1 Sensor 2)	<Ref. to EN(H4SO)(diag)-150, DTC P0139 O2 SENSOR CIRCUIT SLOW RESPONSE (BANK 1 SENSOR 2), Diagnostic Procedure with Diagnostic Trouble Code (DTC).>
P0140	O2 Sensor Circuit No Activity Detected (Bank 1 Sensor 2)	<Ref. to EN(H4SO)(diag)-152, DTC P0140 O2 SENSOR CIRCUIT NO ACTIVITY DETECTED (BANK1 SENSOR2), Diagnostic Procedure with Diagnostic Trouble Code (DTC).>

DTC	Item	Index
P0141	O2 Sensor Heater Circuit (Bank1 Sensor2)	<Ref. to EN(H4SO)(diag)-154, DTC P0141 O2 SENSOR HEATER CIRCUIT (BANK1 SENSOR2), Diagnostic Procedure with Diagnostic Trouble Code (DTC).>
P0171	System Too Lean (Bank 1)	<Ref. to EN(H4SO)(diag)-154, DTC P0171 SYSTEM TOO LEAN (BANK 1), Diagnostic Procedure with Diagnostic Trouble Code (DTC).>
P0172	System Too Rich (Bank 1)	<Ref. to EN(H4SO)(diag)-155, DTC P0172 SYSTEM TOO RICH (BANK 1), Diagnostic Procedure with Diagnostic Trouble Code (DTC).>
P0181	Fuel Temperature Sensor “A” Circuit Range/Performance	<Ref. to EN(H4SO)(diag)-157, DTC P0181 FUEL TEMPERATURE SENSOR “A” CIRCUIT RANGE/PERFORMANCE, Diagnostic Procedure with Diagnostic Trouble Code (DTC).>
P0182	Fuel Temperature Sensor “A” Circuit Low Input	<Ref. to EN(H4SO)(diag)-159, DTC P0182 FUEL TEMPERATURE SENSOR “A” CIRCUIT LOW INPUT, Diagnostic Procedure with Diagnostic Trouble Code (DTC).>
P0183	Fuel Temperature Sensor “A” Circuit High Input	<Ref. to EN(H4SO)(diag)-161, DTC P0183 FUEL TEMPERATURE SENSOR “A” CIRCUIT HIGH INPUT, Diagnostic Procedure with Diagnostic Trouble Code (DTC).>
P0196	Engine Oil Temperature Sensor Circuit Range/Performance	<Ref. to EN(H4SO)(diag)-163, DTC P0196 ENGINE OIL TEMPERATURE SENSOR CIRCUIT RANGE/PERFORMANCE, Diagnostic Procedure with Diagnostic Trouble Code (DTC).>
P0197	Engine Oil Temperature Sensor Low	<Ref. to EN(H4SO)(diag)-165, DTC P0197 ENGINE OIL TEMPERATURE SENSOR LOW, Diagnostic Procedure with Diagnostic Trouble Code (DTC).>
P0198	Engine Oil Temperature Sensor High	<Ref. to EN(H4SO)(diag)-167, DTC P0198 ENGINE OIL TEMPERATURE SENSOR HIGH, Diagnostic Procedure with Diagnostic Trouble Code (DTC).>
P0222	Throttle/Pedal Position Sensor/Switch “B” Circuit Low	<Ref. to EN(H4SO)(diag)-169, DTC P0222 THROTTLE/PEDAL POSITION SENSOR/SWITCH “B” CIRCUIT LOW, Diagnostic Procedure with Diagnostic Trouble Code (DTC).>
P0223	Throttle/Pedal Position Sensor/Switch “B” Circuit High	<Ref. to EN(H4SO)(diag)-171, DTC P0223 THROTTLE/PEDAL POSITION SENSOR/SWITCH “B” CIRCUIT HIGH, Diagnostic Procedure with Diagnostic Trouble Code (DTC).>
P0301	Cylinder 1 Misfire Detected	<Ref. to EN(H4SO)(diag)-173, DTC P0301 CYLINDER 1 MISFIRE DETECTED, Diagnostic Procedure with Diagnostic Trouble Code (DTC).>
P0302	Cylinder 2 Misfire Detected	<Ref. to EN(H4SO)(diag)-173, DTC P0302 CYLINDER 2 MISFIRE DETECTED, Diagnostic Procedure with Diagnostic Trouble Code (DTC).>
P0303	Cylinder 3 Misfire Detected	<Ref. to EN(H4SO)(diag)-173, DTC P0303 CYLINDER 3 MISFIRE DETECTED, Diagnostic Procedure with Diagnostic Trouble Code (DTC).>
P0304	Cylinder 4 Misfire Detected	<Ref. to EN(H4SO)(diag)-174, DTC P0304 CYLINDER 4 MISFIRE DETECTED, Diagnostic Procedure with Diagnostic Trouble Code (DTC).>
P0327	Knock Sensor 1 Circuit Low (Bank 1 or Single Sensor)	<Ref. to EN(H4SO)(diag)-180, DTC P0327 KNOCK SENSOR 1 CIRCUIT LOW (BANK 1 OR SINGLE SENSOR), Diagnostic Procedure with Diagnostic Trouble Code (DTC).>
P0328	Knock Sensor 1 Circuit High (Bank 1 or Single Sensor)	<Ref. to EN(H4SO)(diag)-182, DTC P0328 KNOCK SENSOR 1 CIRCUIT HIGH (BANK 1 OR SINGLE SENSOR), Diagnostic Procedure with Diagnostic Trouble Code (DTC).>
P0335	Crankshaft Position Sensor “A” Circuit	<Ref. to EN(H4SO)(diag)-184, DTC P0335 CRANKSHAFT POSITION SENSOR “A” CIRCUIT, Diagnostic Procedure with Diagnostic Trouble Code (DTC).>
P0336	Crankshaft Position Sensor “A” Circuit Range/Performance	<Ref. to EN(H4SO)(diag)-186, DTC P0336 CRANKSHAFT POSITION SENSOR “A” CIRCUIT RANGE/PERFORMANCE, Diagnostic Procedure with Diagnostic Trouble Code (DTC).>
P0340	Camshaft Position Sensor “A” Circuit (Bank 1 or Single Sensor)	<Ref. to EN(H4SO)(diag)-188, DTC P0340 CAMSHAFT POSITION SENSOR “A” CIRCUIT (BANK 1 OR SINGLE SENSOR), Diagnostic Procedure with Diagnostic Trouble Code (DTC).>
P0341	Camshaft Position Sensor “A” Circuit Range/Performance (Bank 1 or Single Sensor)	<Ref. to EN(H4SO)(diag)-190, DTC P0341 CAMSHAFT POSITION SENSOR “A” CIRCUIT RANGE/PERFORMANCE (BANK 1 OR SINGLE SENSOR), Diagnostic Procedure with Diagnostic Trouble Code (DTC).>

List of Diagnostic Trouble Code (DTC)

DTC	Item	Index
P0400	Exhaust Gas Recirculation Flow	<Ref. to EN(H4SO)(diag)-192, DTC P0400 EXHAUST GAS RECIRCULATION FLOW, Diagnostic Procedure with Diagnostic Trouble Code (DTC).>
P0420	Catalyst System Efficiency Below Threshold (Bank 1)	<Ref. to EN(H4SO)(diag)-194, DTC P0420 CATALYST SYSTEM EFFICIENCY BELOW THRESHOLD (BANK 1), Diagnostic Procedure with Diagnostic Trouble Code (DTC).>
P0442	Evaporative Emission Control System Leak Detected (Small Leak)	<Ref. to EN(H4SO)(diag)-198, DTC P0442 EVAPORATIVE EMISSION CONTROL SYSTEM LEAK DETECTED (SMALL LEAK), Diagnostic Procedure with Diagnostic Trouble Code (DTC).>
P0447	Evaporative Emission Control System Vent Control Circuit Open	<Ref. to EN(H4SO)(diag)-200, DTC P0447 EVAPORATIVE EMISSION CONTROL SYSTEM VENT CONTROL CIRCUIT OPEN, Diagnostic Procedure with Diagnostic Trouble Code (DTC).>
P0448	Evaporative Emission Control System Vent Control Circuit Shorted	<Ref. to EN(H4SO)(diag)-202, DTC P0448 EVAPORATIVE EMISSION CONTROL SYSTEM VENT CONTROL CIRCUIT SHORTED, Diagnostic Procedure with Diagnostic Trouble Code (DTC).>
P0451	Evaporative Emission Control System Pressure Sensor	<Ref. to EN(H4SO)(diag)-204, DTC P0451 EVAPORATIVE EMISSION CONTROL SYSTEM PRESSURE SENSOR, Diagnostic Procedure with Diagnostic Trouble Code (DTC).>
P0452	Evaporative Emission Control System Pressure Sensor Low Input	<Ref. to EN(H4SO)(diag)-206, DTC P0452 EVAPORATIVE EMISSION CONTROL SYSTEM PRESSURE SENSOR LOW INPUT, Diagnostic Procedure with Diagnostic Trouble Code (DTC).>
P0453	Evaporative Emission Control System Pressure Sensor High Input	<Ref. to EN(H4SO)(diag)-208, DTC P0453 EVAPORATIVE EMISSION CONTROL SYSTEM PRESSURE SENSOR HIGH INPUT, Diagnostic Procedure with Diagnostic Trouble Code (DTC).>
P0456	Evaporative Emission Control System Leak Detected (Very Small Leak)	<Ref. to EN(H4SO)(diag)-210, DTC P0456 EVAPORATIVE EMISSION CONTROL SYSTEM LEAK DETECTED (VERY SMALL LEAK), Diagnostic Procedure with Diagnostic Trouble Code (DTC).>
P0457	Evaporative Emission Control System Leak Detected (Fuel Cap Loose/ Off)	<Ref. to EN(H4SO)(diag)-212, DTC P0457 EVAPORATIVE EMISSION CONTROL SYSTEM LEAK DETECTED (FUEL CAP LOOSE/OFF), Diagnostic Procedure with Diagnostic Trouble Code (DTC).>
P0458	Evaporative Emission System Purge Control Valve Circuit Low	<Ref. to EN(H4SO)(diag)-214, DTC P0458 EVAPORATIVE EMISSION SYSTEM PURGE CONTROL VALVE CIRCUIT LOW, Diagnostic Procedure with Diagnostic Trouble Code (DTC).>
P0459	Evaporative Emission System Purge Control Valve Circuit High	<Ref. to EN(H4SO)(diag)-216, DTC P0459 EVAPORATIVE EMISSION SYSTEM PURGE CONTROL VALVE CIRCUIT HIGH, Diagnostic Procedure with Diagnostic Trouble Code (DTC).>
P0461	Fuel Level Sensor “A” Circuit Range/ Performance	<Ref. to EN(H4SO)(diag)-218, DTC P0461 FUEL LEVEL SENSOR “A” CIRCUIT RANGE/PERFORMANCE, Diagnostic Procedure with Diagnostic Trouble Code (DTC).>
P0462	Fuel Level Sensor “A” Circuit Low	<Ref. to EN(H4SO)(diag)-218, DTC P0462 FUEL LEVEL SENSOR “A” CIRCUIT LOW, Diagnostic Procedure with Diagnostic Trouble Code (DTC).>
P0463	Fuel Level Sensor “A” Circuit High	<Ref. to EN(H4SO)(diag)-218, DTC P0463 FUEL LEVEL SENSOR “A” CIRCUIT HIGH, Diagnostic Procedure with Diagnostic Trouble Code (DTC).>
P0464	Fuel Level Sensor Circuit Intermittent	<Ref. to EN(H4SO)(diag)-219, DTC P0464 FUEL LEVEL SENSOR CIRCUIT INTERMITTENT, Diagnostic Procedure with Diagnostic Trouble Code (DTC).>
P0500	Vehicle Speed Sensor “A”	<Ref. to EN(H4SO)(diag)-219, DTC P0500 VEHICLE SPEED SENSOR “A”, Diagnostic Procedure with Diagnostic Trouble Code (DTC).>
P0506	Idle Air Control System RPM Lower Than Expected	<Ref. to EN(H4SO)(diag)-220, DTC P0506 IDLE AIR CONTROL SYSTEM RPM LOWER THAN EXPECTED, Diagnostic Procedure with Diagnostic Trouble Code (DTC).>
P0507	Idle Air Control System RPM Higher Than Expected	<Ref. to EN(H4SO)(diag)-222, DTC P0507 IDLE AIR CONTROL SYSTEM RPM HIGHER THAN EXPECTED, Diagnostic Procedure with Diagnostic Trouble Code (DTC).>
P0512	Starter Request Circuit	<Ref. to EN(H4SO)(diag)-224, DTC P0512 STARTER REQUEST CIRCUIT, Diagnostic Procedure with Diagnostic Trouble Code (DTC).>
P0513	Incorrect Immobilizer Key	<Ref. to IM(diag)-16, DTC P0513 INCORRECT IMMOBILIZER KEY, Diagnostic Procedure with Diagnostic Trouble Code (DTC).>

DTC	Item	Index
P0604	Internal Control Module Random Access Memory (RAM) Error	<Ref. to EN(H4SO)(diag)-226, DTC P0604 INTERNAL CONTROL MODULE RANDOM ACCESS MEMORY (RAM) ERROR, Diagnostic Procedure with Diagnostic Trouble Code (DTC).>
P0605	Internal Control Module Read Only Memory (ROM) Error	<Ref. to EN(H4SO)(diag)-227, DTC P0605 INTERNAL CONTROL MODULE READ ONLY MEMORY (ROM) ERROR, Diagnostic Procedure with Diagnostic Trouble Code (DTC).>
P0607	Throttle Control System Circuit Range/Performance	<Ref. to EN(H4SO)(diag)-228, DTC P0607 THROTTLE CONTROL SYSTEM CIRCUIT RANGE/PERFORMANCE, Diagnostic Procedure with Diagnostic Trouble Code (DTC).>
P0638	Throttle Actuator Control Range/Performance (Bank 1)	<Ref. to EN(H4SO)(diag)-229, DTC P0638 THROTTLE ACTUATOR CONTROL RANGE/PERFORMANCE (BANK 1), Diagnostic Procedure with Diagnostic Trouble Code (DTC).>
P0700	Transmission Control System (MIL Request)	<Ref. to EN(H4SO)(diag)-229, DTC P0700 TRANSMISSION CONTROL SYSTEM (MIL REQUEST), Diagnostic Procedure with Diagnostic Trouble Code (DTC).>
P0851	Park/Neutral Switch Input Circuit Low (AT Model)	<Ref. to EN(H4SO)(diag)-230, DTC P0851 PARK/NEUTRAL SWITCH INPUT CIRCUIT LOW (AT MODEL), Diagnostic Procedure with Diagnostic Trouble Code (DTC).>
P0851	Neutral Switch Input Circuit Low (MT Model)	<Ref. to EN(H4SO)(diag)-232, DTC P0851 NEUTRAL SWITCH INPUT CIRCUIT LOW (MT MODEL), Diagnostic Procedure with Diagnostic Trouble Code (DTC).>
P0852	Park/Neutral Switch Input Circuit High (AT Model)	<Ref. to EN(H4SO)(diag)-234, DTC P0852 PARK/NEUTRAL SWITCH INPUT CIRCUIT HIGH (AT MODEL), Diagnostic Procedure with Diagnostic Trouble Code (DTC).>
P0852	Neutral Switch Input Circuit High (MT Model)	<Ref. to EN(H4SO)(diag)-236, DTC P0852 NEUTRAL SWITCH INPUT CIRCUIT HIGH (MT MODEL), Diagnostic Procedure with Diagnostic Trouble Code (DTC).>
P1152	O2 Sensor Circuit Range/Performance (Low) (Bank1 Sensor1)	<Ref. to EN(H4SO)(diag)-238, DTC P1152 O2 SENSOR CIRCUIT RANGE/PERFORMANCE (LOW) (BANK1 SENSOR1), Diagnostic Procedure with Diagnostic Trouble Code (DTC).>
P1153	O2 Sensor Circuit Range/Performance (High) (Bank1 Sensor1)	<Ref. to EN(H4SO)(diag)-240, DTC P1153 O2 SENSOR CIRCUIT RANGE/PERFORMANCE (HIGH) (BANK1 SENSOR1), Diagnostic Procedure with Diagnostic Trouble Code (DTC).>
P1160	Return Spring Failure	<Ref. to EN(H4SO)(diag)-241, DTC P1160 RETURN SPRING FAILURE, Diagnostic Procedure with Diagnostic Trouble Code (DTC).>
P1443	Vent Control Solenoid Valve Function Problem	<Ref. to EN(H4SO)(diag)-242, DTC P1443 VENT CONTROL SOLENOID VALVE FUNCTION PROBLEM, Diagnostic Procedure with Diagnostic Trouble Code (DTC).>
P1492	EGR Solenoid Valve Signal #1 Circuit Malfunction (Low Input)	<Ref. to EN(H4SO)(diag)-244, DTC P1492 EGR SOLENOID VALVE SIGNAL #1 CIRCUIT MALFUNCTION (LOW INPUT), Diagnostic Procedure with Diagnostic Trouble Code (DTC).>
P1493	EGR Solenoid Valve Signal #1 Circuit Malfunction (High Input)	<Ref. to EN(H4SO)(diag)-244, DTC P1493 EGR SOLENOID VALVE SIGNAL #1 CIRCUIT MALFUNCTION (HIGH INPUT), Diagnostic Procedure with Diagnostic Trouble Code (DTC).>
P1494	EGR Solenoid Valve Signal #2 Circuit Malfunction (Low Input)	<Ref. to EN(H4SO)(diag)-244, DTC P1494 EGR SOLENOID VALVE SIGNAL #2 CIRCUIT MALFUNCTION (LOW INPUT), Diagnostic Procedure with Diagnostic Trouble Code (DTC).>
P1495	EGR Solenoid Valve Signal #2 Circuit Malfunction (High Input)	<Ref. to EN(H4SO)(diag)-244, DTC P1495 EGR SOLENOID VALVE SIGNAL #2 CIRCUIT MALFUNCTION (HIGH INPUT), Diagnostic Procedure with Diagnostic Trouble Code (DTC).>
P1496	EGR Solenoid Valve Signal #3 Circuit Malfunction (Low Input)	<Ref. to EN(H4SO)(diag)-244, DTC P1496 EGR SOLENOID VALVE SIGNAL #3 CIRCUIT MALFUNCTION (LOW INPUT), Diagnostic Procedure with Diagnostic Trouble Code (DTC).>
P1497	EGR Solenoid Valve Signal #3 Circuit Malfunction (High Input)	<Ref. to EN(H4SO)(diag)-244, DTC P1497 EGR SOLENOID VALVE SIGNAL #3 CIRCUIT MALFUNCTION (HIGH INPUT), Diagnostic Procedure with Diagnostic Trouble Code (DTC).>

DTC	Item	Index
P1498	EGR Solenoid Valve Signal #4 Circuit Malfunction (Low Input)	<Ref. to EN(H4SO)(diag)-245, DTC P1498 EGR SOLENOID VALVE SIGNAL #4 CIRCUIT MALFUNCTION (LOW INPUT), Diagnostic Procedure with Diagnostic Trouble Code (DTC).>
P1499	EGR Solenoid Valve Signal #4 Circuit Malfunction (High Input)	<Ref. to EN(H4SO)(diag)-248, DTC P1499 EGR SOLENOID VALVE SIGNAL #4 CIRCUIT MALFUNCTION (HIGH INPUT), Diagnostic Procedure with Diagnostic Trouble Code (DTC).>
P1518	Starter Switch Circuit Low Input	<Ref. to EN(H4SO)(diag)-251, DTC P1518 STARTER SWITCH CIRCUIT LOW INPUT, Diagnostic Procedure with Diagnostic Trouble Code (DTC).>
P1560	Back-Up Voltage Circuit Malfunction	<Ref. to EN(H4SO)(diag)-253, DTC P1560 BACK-UP VOLTAGE CIRCUIT MALFUNCTION, Diagnostic Procedure with Diagnostic Trouble Code (DTC).>
P1570	Antenna	<Ref. to IM(diag)-17, DTC P1570 ANTENNA, Diagnostic Procedure with Diagnostic Trouble Code (DTC).>
P1571	Reference Code Incompatibility	<Ref. to IM(diag)-19, DTC P1571 REFERENCE CODE INCOMPATIBILITY, Diagnostic Procedure with Diagnostic Trouble Code (DTC).>
P1572	IMM Circuit Failure	<Ref. to IM(diag)-20, DTC P1572 IMM CIRCUIT FAILURE (EXCEPT ANTENNA CIRCUIT), Diagnostic Procedure with Diagnostic Trouble Code (DTC).>
P1574	Key Communication Failure	<Ref. to IM(diag)-22, DTC P1574 KEY COMMUNICATION FAILURE, Diagnostic Procedure with Diagnostic Trouble Code (DTC).>
P1576	EGI Control Module EEPROM	<Ref. to IM(diag)-22, DTC P1576 EGI CONTROL MODULE EEPROM, Diagnostic Procedure with Diagnostic Trouble Code (DTC).>
P1577	IMM Control Module EEPROM	<Ref. to IM(diag)-23, DTC P1577 IMM CONTROL MODULE EEPROM, Diagnostic Procedure with Diagnostic Trouble Code (DTC).>
P1578	Meter Failure	<Ref. to IM(diag)-24, DTC P1578 METER FAILURE, Diagnostic Procedure with Diagnostic Trouble Code (DTC).>
P1602	Control Module Programming Error	<Ref. to EN(H4SO)(diag)-255, DTC P1602 CONTROL MODULE PROGRAMMING ERROR, Diagnostic Procedure with Diagnostic Trouble Code (DTC).>
P2096	Post Catalyst Fuel Trim System Too Lean (Bank 1)	<Ref. to EN(H4SO)(diag)-264, DTC P2096 POST CATALYST FUEL TRIM SYSTEM TOO LEAN (BANK 1), Diagnostic Procedure with Diagnostic Trouble Code (DTC).>
P2097	Post Catalyst Fuel Trim System Too Rich (Bank 1)	<Ref. to EN(H4SO)(diag)-270, DTC P2097 POST CATALYST FUEL TRIM SYSTEM TOO RICH (BANK 1), Diagnostic Procedure with Diagnostic Trouble Code (DTC).>
P2101	Throttle Actuator Control Motor Circuit Range/Performance	<Ref. to EN(H4SO)(diag)-276, DTC P2101 THROTTLE ACTUATOR CONTROL MOTOR CIRCUIT RANGE/PERFORMANCE, Diagnostic Procedure with Diagnostic Trouble Code (DTC).>
P2102	Throttle Actuator Control Motor Circuit Low	<Ref. to EN(H4SO)(diag)-281, DTC P2102 THROTTLE ACTUATOR CONTROL MOTOR CIRCUIT LOW, Diagnostic Procedure with Diagnostic Trouble Code (DTC).>
P2103	Throttle Actuator Control Motor Circuit High	<Ref. to EN(H4SO)(diag)-283, DTC P2103 THROTTLE ACTUATOR CONTROL MOTOR CIRCUIT HIGH, Diagnostic Procedure with Diagnostic Trouble Code (DTC).>
P2109	Throttle/Pedal Position Sensor “A” Minimum Stop Performance	<Ref. to EN(H4SO)(diag)-284, DTC P2109 THROTTLE/PEDAL POSITION SENSOR “A” MINIMUM STOP PERFORMANCE, Diagnostic Procedure with Diagnostic Trouble Code (DTC).>
P2122	Throttle/Pedal Position Sensor/Switch “D” Circuit Low Input	<Ref. to EN(H4SO)(diag)-285, DTC P2122 THROTTLE/PEDAL POSITION SENSOR/SWITCH “D” CIRCUIT LOW INPUT, Diagnostic Procedure with Diagnostic Trouble Code (DTC).>
P2123	Throttle/Pedal Position Sensor/Switch “D” Circuit High Input	<Ref. to EN(H4SO)(diag)-287, DTC P2123 THROTTLE/PEDAL POSITION SENSOR/SWITCH “D” CIRCUIT HIGH INPUT, Diagnostic Procedure with Diagnostic Trouble Code (DTC).>
P2127	Throttle/Pedal Position Sensor/Switch “E” Circuit Low Input	<Ref. to EN(H4SO)(diag)-289, DTC P2127 THROTTLE/PEDAL POSITION SENSOR/SWITCH “E” CIRCUIT LOW INPUT, Diagnostic Procedure with Diagnostic Trouble Code (DTC).>

DTC	Item	Index
P2128	Throttle/Pedal Position Sensor/Switch “E” Circuit High Input	<Ref. to EN(H4SO)(diag)-291, DTC P2128 THROTTLE/PEDAL POSITION SENSOR/SWITCH “E” CIRCUIT HIGH INPUT, Diagnostic Procedure with Diagnostic Trouble Code (DTC).>
P2135	Throttle/Pedal Position Sensor/Switch “A”/“B” Voltage Correlation	<Ref. to EN(H4SO)(diag)-293, DTC P2135 THROTTLE/PEDAL POSITION SENSOR/SWITCH “A”/“B” VOLTAGE CORRELATION, Diagnostic Procedure with Diagnostic Trouble Code (DTC).>
P2138	Throttle/Pedal Position Sensor/Switch “D”/“E” Voltage Correlation	<Ref. to EN(H4SO)(diag)-296, DTC P2138 THROTTLE/PEDAL POSITION SENSOR/SWITCH “D”/“E” VOLTAGE CORRELATION, Diagnostic Procedure with Diagnostic Trouble Code (DTC).>
P2227	Atmospheric Pressure Sensor Range/ Performance	<Ref. to EN(H4SO)(diag)-298, DTC P2227 BAROMETRIC PRESSURE CIRCUIT RANGE/PERFORMANCE, Diagnostic Procedure with Diagnostic Trouble Code (DTC).>
P2228	Barometric Pressure Circuit Low	<Ref. to EN(H4SO)(diag)-298, DTC P2228 BAROMETRIC PRESSURE CIRCUIT LOW, Diagnostic Procedure with Diagnostic Trouble Code (DTC).>
P2229	Barometric Pressure Circuit High	<Ref. to EN(H4SO)(diag)-299, DTC P2229 BAROMETRIC PRESSURE CIRCUIT HIGH, Diagnostic Procedure with Diagnostic Trouble Code (DTC).>
U0073	CAN Failure, Bus ‘OFF’ Detection	<Ref. to EN(H4SO)(diag)-299, DTC U0073 CAN FAILURE, BUS ‘OFF’ DETECTION, Diagnostic Procedure with Diagnostic Trouble Code (DTC).>
U0101	CAN (TCU) Data not Loaded	<Ref. to EN(H4SO)(diag)-299, DTC U0101 CAN (TCU) DATA NOT LOADED, Diagnostic Procedure with Diagnostic Trouble Code (DTC).>
U0122	CAN (VDC) Data not Loaded	<Ref. to EN(H4SO)(diag)-299, DTC U0122 CAN (VDC) DATA NOT LOADED, Diagnostic Procedure with Diagnostic Trouble Code (DTC).>
U0140	CAN (BCU) Data not Loaded	<Ref. to EN(H4SO)(diag)-299, DTC U0140 CAN (BCU) DATA NOT LOADED, Diagnostic Procedure with Diagnostic Trouble Code (DTC).>
U0402	CAN (TCU) Data Abnormal	<Ref. to EN(H4SO)(diag)-299, DTC U0402 CAN (TCU) DATA ABNORMAL, Diagnostic Procedure with Diagnostic Trouble Code (DTC).>
U0416	CAN (VDC) Data Abnormal	<Ref. to EN(H4SO)(diag)-299, DTC U0416 CAN (VDC) DATA ABNORMAL, Diagnostic Procedure with Diagnostic Trouble Code (DTC).>
U0422	CAN (BCU) Data Abnormal	<Ref. to EN(H4SO)(diag)-299, DTC U0422 CAN (BCU) DATA ABNORMAL, Diagnostic Procedure with Diagnostic Trouble Code (DTC).>

18. Diagnostic Procedure with Diagnostic Trouble Code (DTC)

A: DTC P0026 INTAKE VALVE CONTROL SOLENOID CIRCUIT RANGE/PERFORMANCE (BANK 1)

DTC DETECTING CONDITION:

- Immediately at fault recognition
- GENERAL DESCRIPTION <Ref. to GD(H4SO)-8, DTC P0026 INTAKE VALVE CONTROL SOLENOID CIRCUIT RANGE/PERFORMANCE (BANK 1), Diagnostic Trouble Code (DTC) Detecting Criteria.>

TROUBLE SYMPTOM:

Improper idling

CAUTION:

After servicing or replacing faulty parts, perform Clear Memory Mode <Ref. to EN(H4SO)(diag)-54, OPERATION, Clear Memory Mode.>, and Inspection Mode <Ref. to EN(H4SO)(diag)-42, PROCEDURE, Inspection Mode.>.

WIRING DIAGRAM:

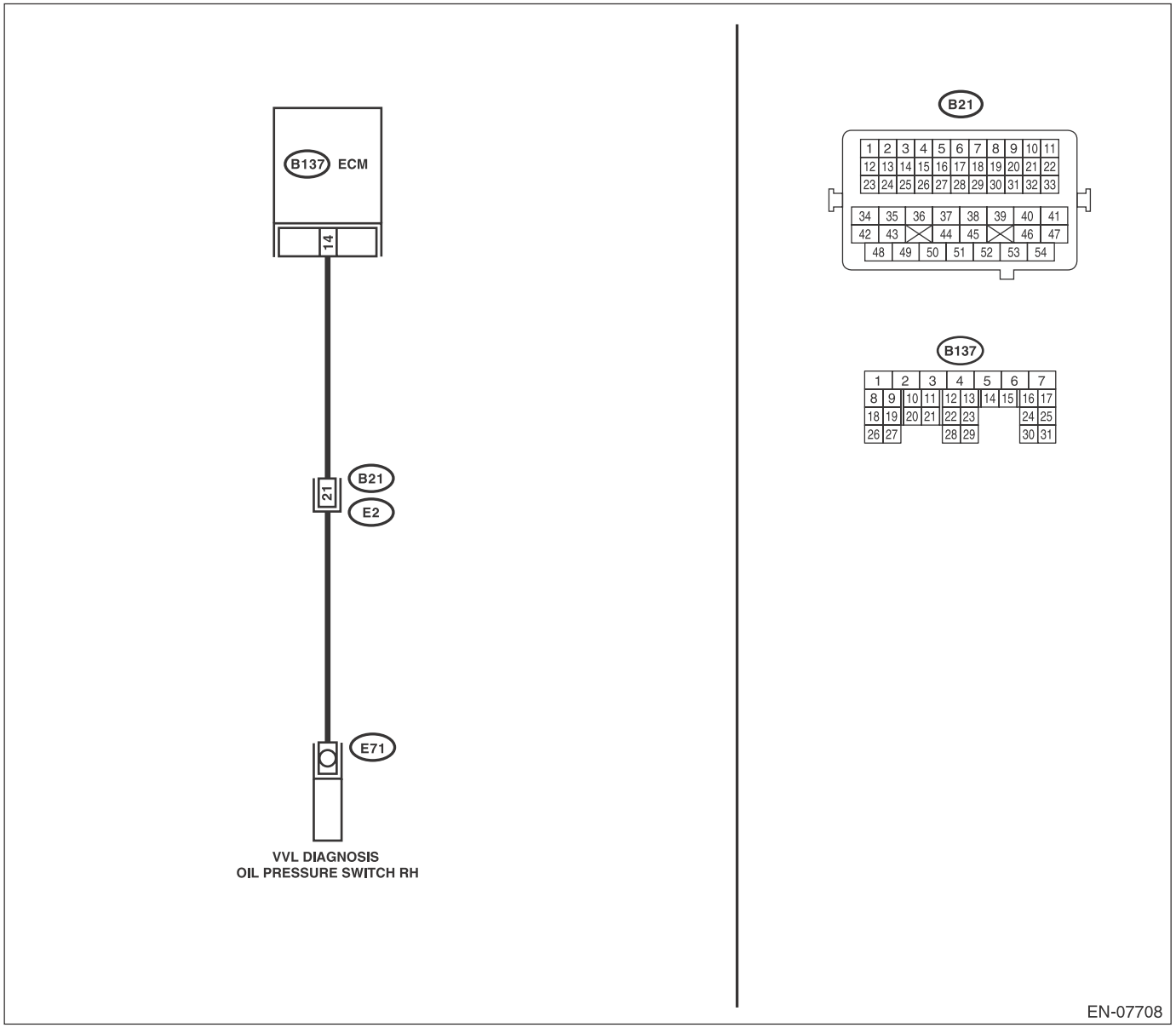

	Step	Check	Yes	No
1	**CHECK HARNESS BETWEEN ECM AND VARIABLE VALVE LIFT DIAGNOSIS OIL PRESSURE SWITCH RH CONNECTOR.** 1) Warm up the engine. 2) Turn the ignition switch to OFF. 3) Disconnect the connectors from the ECM and variable valve lift diagnosis oil pressure switch RH. 4) Measure the resistance of harness between ECM and variable valve lift diagnosis oil pressure switch RH connector. ***Connector & terminal*** ***(B137) No. 14 — (E71) No. 1:***	Is the resistance less than 1 Ω?	Go to step **2**.	Repair the harness and connector. NOTE: In this case, repair the following item: • Open circuit in harness between ECM and variable valve lift diagnosis oil pressure switch RH connector • Poor contact of coupling connector
2	**CHECK HARNESS BETWEEN ECM AND VARIABLE VALVE LIFT DIAGNOSIS OIL PRESSURE SWITCH RH CONNECTOR.** Measure the resistance between the variable valve lift diagnosis oil pressure switch RH connector and engine ground. ***Connector & terminal*** ***(E71) No. 1 — Engine ground:***	Is the resistance 1 MΩ or more?	Go to step **3**.	Repair the short circuit to ground in harness between ECM and variable valve lift diagnosis oil pressure switch RH connector.
3	**CHECK HARNESS BETWEEN ECM AND VARIABLE VALVE LIFT DIAGNOSIS OIL PRESSURE SWITCH RH CONNECTOR.** 1) Turn the ignition switch to ON. 2) Measure the voltage between the variable valve lift diagnosis oil pressure switch RH connector and engine ground. ***Connector & terminal*** ***(E71) No. 1 (+) — Engine ground (–):***	Is the voltage 10 V or more?	Repair the short circuit to power supply in harness between ECM and variable valve lift diagnosis oil pressure switch RH connector.	Go to step **4**.
4	**CHECK DTC.** 1) Perform the Clear Memory Mode. 2) After idling the engine, check the DTC. NOTE: For detailed procedures, refer to “Clear Memory Mode”. <Ref. to EN(H4SO)(diag)-54, Clear Memory Mode.>	Is DTC displayed?	Replace the oil switching solenoid valve RH. <Ref. to ME(H4SO)-90, Oil Switching Solenoid Valve.> After replacement, go to the next step. Go to step **5**.	End.
5	**CHECK DTC.** 1) Perform the Clear Memory Mode. 2) After idling the engine, check the DTC. NOTE: For detailed procedures, refer to “Clear Memory Mode”. <Ref. to EN(H4SO)(diag)-54, Clear Memory Mode.>	Is DTC displayed?	Check for oil routing.	End.

B: DTC P0028 INTAKE VALVE CONTROL SOLENOID CIRCUIT RANGE/PERFORMANCE (BANK 2)

DTC DETECTING CONDITION:

- Immediately at fault recognition
- GENERAL DESCRIPTION <Ref. to GD(H4SO)-10, DTC P0028 INTAKE VALVE CONTROL SOLENOID CIRCUIT RANGE/PERFORMANCE (BANK 2), Diagnostic Trouble Code (DTC) Detecting Criteria.>

TROUBLE SYMPTOM:

Improper idling

CAUTION:

After servicing or replacing faulty parts, perform Clear Memory Mode <Ref. to EN(H4SO)(diag)-54, OPERATION, Clear Memory Mode.>, and Inspection Mode <Ref. to EN(H4SO)(diag)-42, PROCEDURE, Inspection Mode.>.

WIRING DIAGRAM:

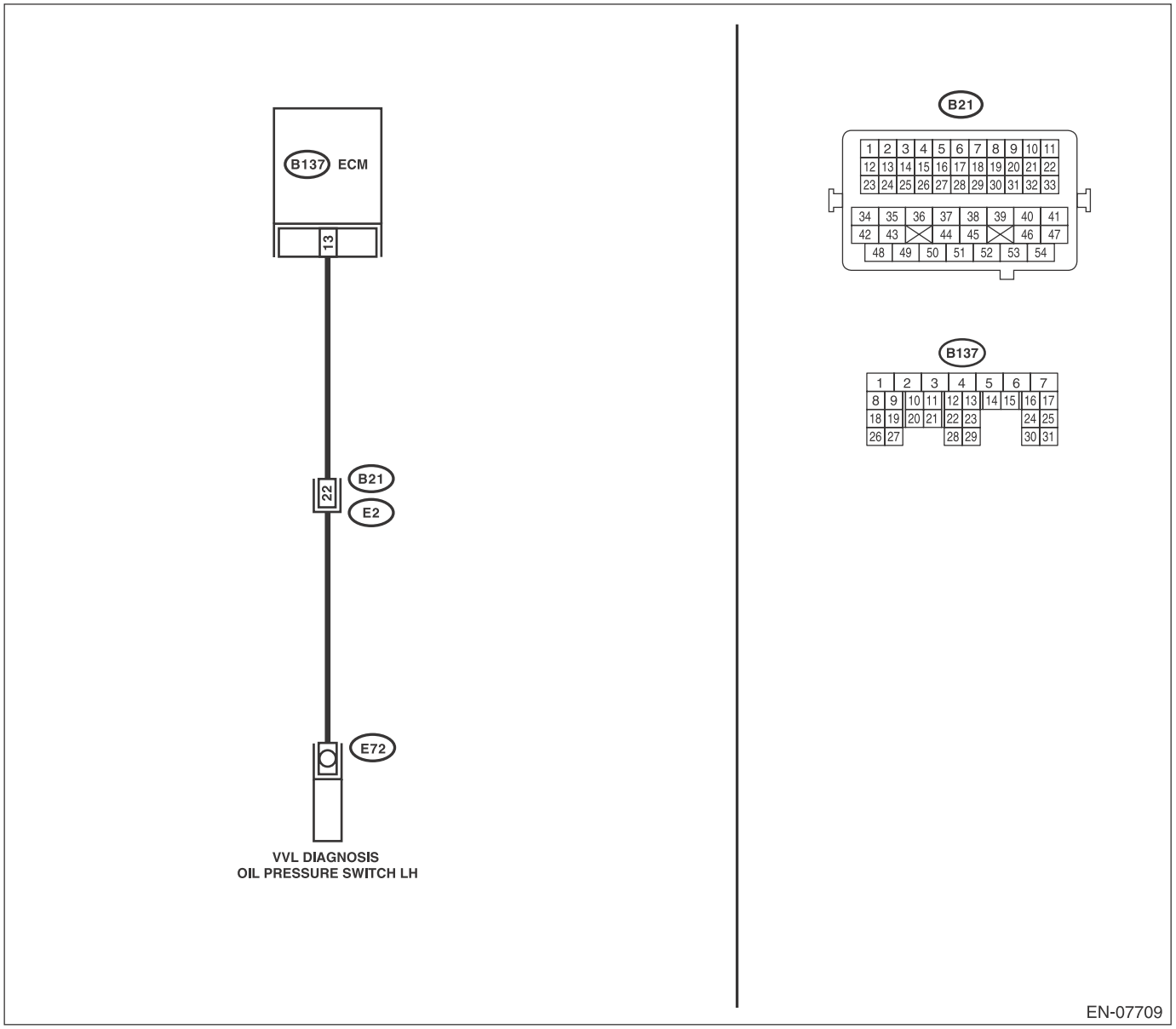

	Step	Check	Yes	No
1	**CHECK HARNESS BETWEEN ECM AND VARIABLE VALVE LIFT DIAGNOSIS OIL PRESSURE SWITCH LH CONNECTOR.** 1) Warm up the engine. 2) Turn the ignition switch to OFF. 3) Disconnect the connectors from the ECM and variable valve lift diagnosis oil pressure switch LH. 4) Measure the resistance of harness between ECM and variable valve lift diagnosis oil pressure switch LH connector. ***Connector & terminal*** ***(B137) No. 13 — (E72) No. 1:***	Is the resistance less than 1 Ω?	Go to step **2**.	Repair the harness and connector. NOTE: In this case, repair the following item: • Open circuit in harness between ECM and variable valve lift diagnosis oil pressure switch LH connector • Poor contact of coupling connector
2	**CHECK HARNESS BETWEEN ECM AND VARIABLE VALVE LIFT DIAGNOSIS OIL PRESSURE SWITCH LH CONNECTOR.** Measure the resistance between the variable valve lift diagnosis oil pressure switch LH connector and engine ground. ***Connector & terminal*** ***(E72) No. 1 — Engine ground:***	Is the resistance 1 MΩ or more?	Go to step **3**.	Repair the short circuit to ground in harness between ECM and variable valve lift diagnosis oil pressure switch LH connector.
3	**CHECK HARNESS BETWEEN ECM AND VARIABLE VALVE LIFT DIAGNOSIS OIL PRESSURE SWITCH LH CONNECTOR.** 1) Turn the ignition switch to ON. 2) Measure the voltage between the variable valve lift diagnosis oil pressure switch LH connector and engine ground. ***Connector & terminal*** ***(E72) No. 1 (+) — Engine ground (–):***	Is the voltage 10 V or more?	Repair the short circuit to power supply in harness between ECM and variable valve lift diagnosis oil pressure switch LH connector.	Go to step **4**.
4	**CHECK DTC.** 1) Perform the Clear Memory Mode. 2) After idling the engine, check the DTC. NOTE: For detailed procedures, refer to “Clear Memory Mode”. <Ref. to EN(H4SO)(diag)-54, Clear Memory Mode.>	Is DTC displayed?	Replace the oil switching solenoid valve LH. <Ref. to ME(H4SO)-90, Oil Switching Solenoid Valve.> After replacement, go to the next step. Go to step **5**.	End.
5	**CHECK DTC.** 1) Perform the Clear Memory Mode. 2) After idling the engine, check the DTC. NOTE: For detailed procedures, refer to “Clear Memory Mode”. <Ref. to EN(H4SO)(diag)-54, Clear Memory Mode.>	Is DTC displayed?	Check for oil routing.	End.

C: DTC P0030 HO2S HEATER CONTROL CIRCUIT (BANK 1 SENSOR 1)

DTC DETECTING CONDITION:

- Detected when two consecutive driving cycles with fault occur.
- GENERAL DESCRIPTION <Ref. to GD(H4SO)-11, DTC P0030 HO2S HEATER CONTROL CIRCUIT (BANK 1 SENSOR 1), Diagnostic Trouble Code (DTC) Detecting Criteria.>

CAUTION:

After servicing or replacing faulty parts, perform Clear Memory Mode <Ref. to EN(H4SO)(diag)-54, OPERATION, Clear Memory Mode.>, and Inspection Mode <Ref. to EN(H4SO)(diag)-42, PROCEDURE, Inspection Mode.>.

WIRING DIAGRAM:

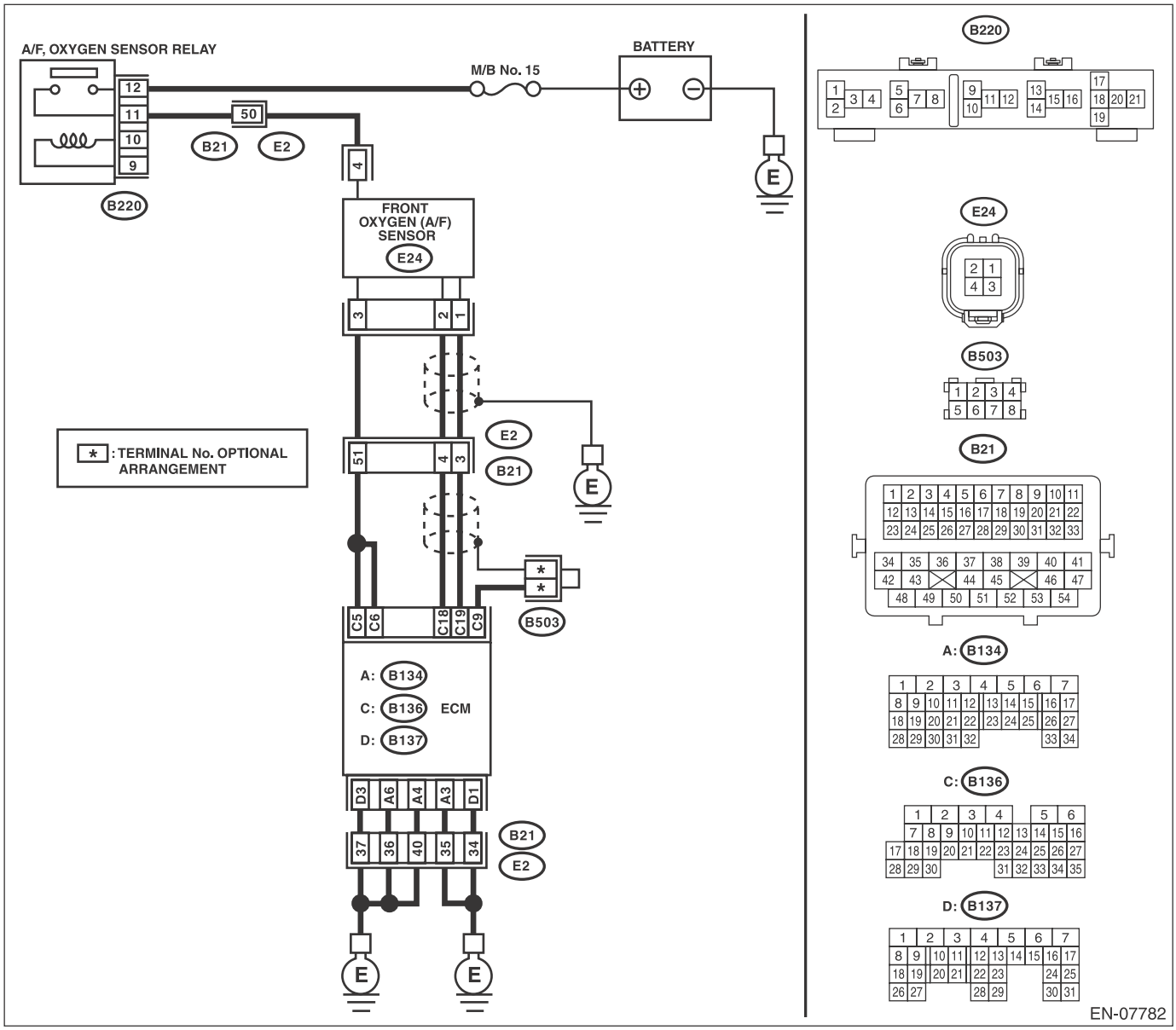

	Step	Check	Yes	No
1	**CHECK HARNESS BETWEEN ECM AND FRONT OXYGEN (A/F) SENSOR CONNECTOR.** 1) Start and warm up the engine. 2) Turn the ignition switch to OFF. 3) Disconnect the connectors from ECM and front oxygen (A/F) sensor. 4) Measure the resistance of harness between ECM and front oxygen (A/F) sensor connector. ***Connector & terminal*** ***(B136) No. 5 — (E24) No. 3:*** ***(B136) No. 6 — (E24) No. 3:*** ***(B136) No. 18 — (E24) No. 2:*** ***(B136) No. 19 — (E24) No. 1:***	Is the resistance less than 1 Ω?	Go to step **2**.	Repair the harness and connector. NOTE: In this case, repair the following item: • Open circuit in harness between ECM and front oxygen (A/F) sensor connector • Poor contact of coupling connector
2	**CHECK FRONT OXYGEN (A/F) SENSOR.** Measure the resistance between front oxygen (A/F) sensor connector terminals. ***Terminals*** ***No. 3 — No. 4:***	Is the resistance 2 — 3 Ω?	Go to step **3**.	Replace the front oxygen (A/F) sensor. <Ref. to FU(H4SO)-35, Front Oxygen (A/F) Sensor.>
3	**CHECK FOR POOR CONTACT.** Check for poor contact of ECM and front oxygen (A/F) sensor connector.	Is there poor contact of ECM or front oxygen (A/F) sensor connector?	Repair the poor contact of ECM or front oxygen (A/F) sensor connector.	Replace the front oxygen (A/F) sensor. <Ref. to FU(H4SO)-35, Front Oxygen (A/F) Sensor.>

D: DTC P0031 HO2S HEATER CONTROL CIRCUIT LOW (BANK 1 SENSOR 1)

DTC DETECTING CONDITION:

- Immediately at fault recognition
- GENERAL DESCRIPTION <Ref. to GD(H4SO)-13, DTC P0031 HO2S HEATER CONTROL CIRCUIT LOW (BANK 1 SENSOR 1), Diagnostic Trouble Code (DTC) Detecting Criteria.>

CAUTION:

After servicing or replacing faulty parts, perform Clear Memory Mode <Ref. to EN(H4SO)(diag)-54, OPERATION, Clear Memory Mode.>, and Inspection Mode <Ref. to EN(H4SO)(diag)-42, PROCEDURE, Inspection Mode.>.

WIRING DIAGRAM:

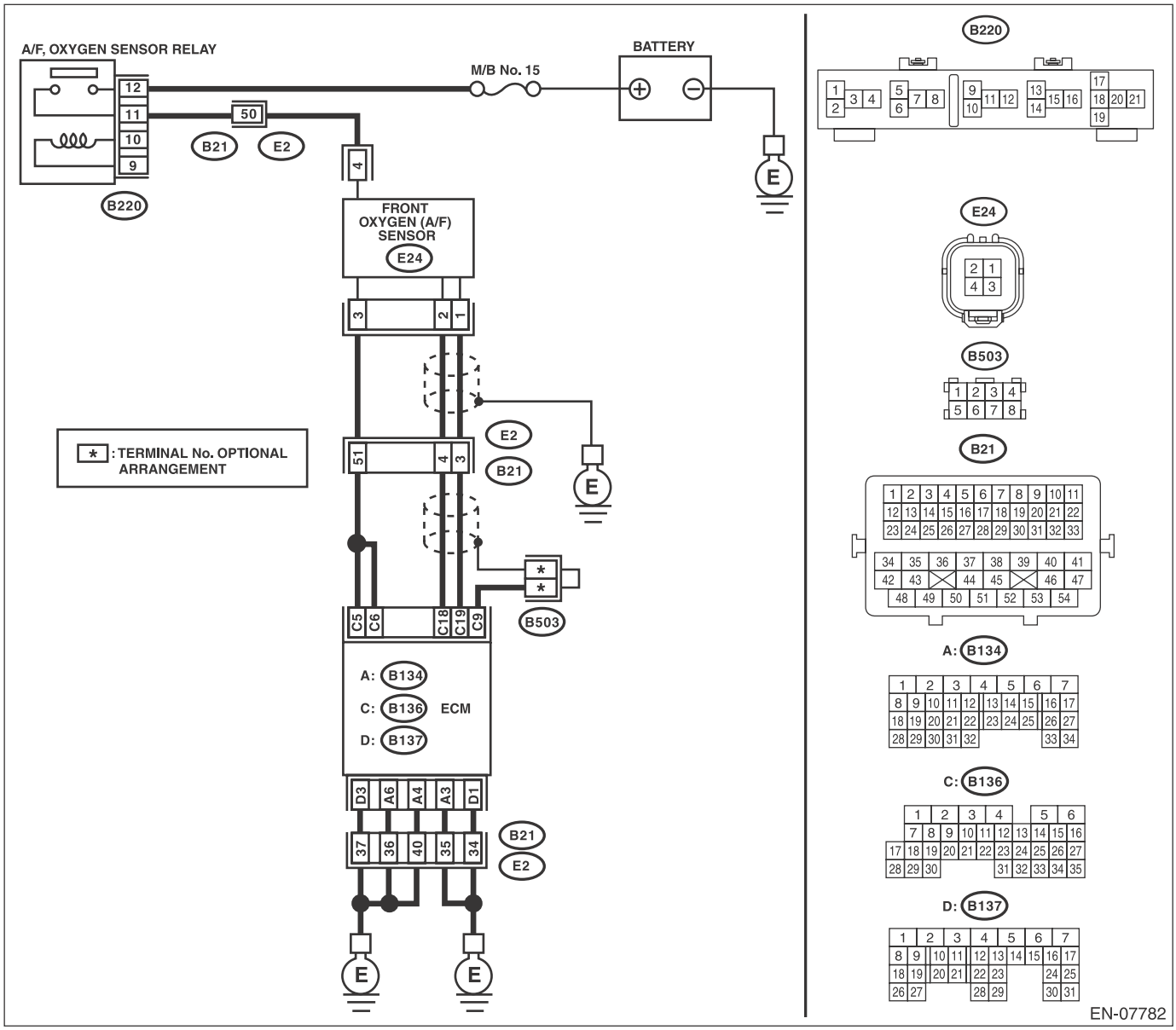

	Step	Check	Yes	No
1	**CHECK POWER SUPPLY TO FRONT OXYGEN (A/F) SENSOR.** 1) Turn the ignition switch to OFF. 2) Disconnect the connector from front oxygen (A/F) sensor. 3) Turn the ignition switch to ON. 4) Measure the voltage between front oxygen (A/F) sensor connector and engine ground. ***Connector & terminal*** ***(E24) No. 4 (+) — Engine ground (–):***	Is the voltage 10 V or more?	Go to step **2**.	Repair the power supply line. NOTE: In this case, repair the following item: • Open circuit in harness between A/F, oxygen sensor relay connector and front oxygen (A/F) sensor connector • Poor contact of A/F, oxygen sensor relay connector • Poor contact of coupling connector • Fault of A/F, oxygen sensor relay
2	**CHECK HARNESS BETWEEN ECM AND FRONT OXYGEN (A/F) SENSOR CONNECTOR.** 1) Turn the ignition switch to OFF. 2) Disconnect the connector from ECM. 3) Measure the resistance between ECM and front oxygen (A/F) sensor connector. ***Connector & terminal*** ***(B136) No. 5 — (E24) No. 3:*** ***(B136) No. 6 — (E24) No. 3:***	Is the resistance less than 1 Ω?	Go to step **3**.	Repair the harness and connector. NOTE: In this case, repair the following item: • Open circuit in harness between ECM and front oxygen (A/F) sensor connector • Poor contact of coupling connector
3	**CHECK GROUND CIRCUIT FOR ECM.** Measure the resistance of harness between ECM and chassis ground. ***Connector & terminal*** ***(B134) No. 3 — Chassis ground:*** ***(B134) No. 4 — Chassis ground:*** ***(B134) No. 6 — Chassis ground:*** ***(B137) No. 1 — Chassis ground:*** ***(B137) No. 3 — Chassis ground:***	Is the resistance less than 5 Ω?	Go to step **4**.	Repair the harness and connector. NOTE: In this case, repair the following item: • Open circuit of harness between ECM and engine ground • Poor contact of ECM connector • Poor contact of coupling connector
4	**CHECK FRONT OXYGEN (A/F) SENSOR.** Measure the resistance between front oxygen (A/F) sensor connector terminals. ***Terminals*** ***No. 3 — No. 4:***	Is the resistance 2 — 3 Ω?	Repair the poor contact of ECM connector.	Replace the front oxygen (A/F) sensor. <Ref. to FU(H4SO)-35, Front Oxygen (A/F) Sensor.>

E: DTC P0032 HO2S HEATER CONTROL CIRCUIT HIGH (BANK 1 SENSOR 1)

DTC DETECTING CONDITION:

- Immediately at fault recognition
- GENERAL DESCRIPTION <Ref. to GD(H4SO)-15, DTC P0032 HO2S HEATER CONTROL CIRCUIT HIGH (BANK 1 SENSOR 1), Diagnostic Trouble Code (DTC) Detecting Criteria.>

CAUTION:

After servicing or replacing faulty parts, perform Clear Memory Mode <Ref. to EN(H4SO)(diag)-54, OPERATION, Clear Memory Mode.>, and Inspection Mode <Ref. to EN(H4SO)(diag)-42, PROCEDURE, Inspection Mode.>.

WIRING DIAGRAM:

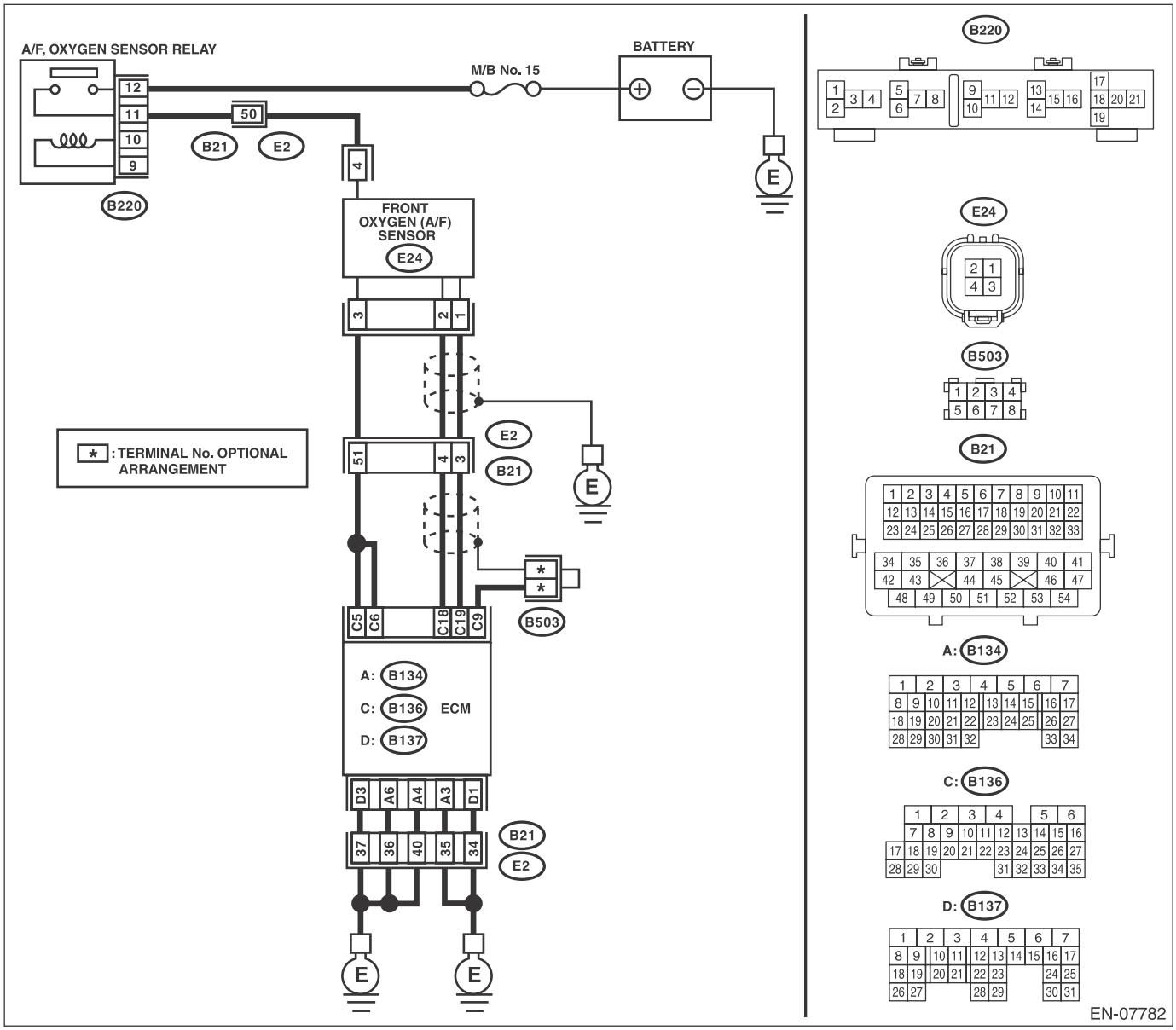

	Step	Check	Yes	No
1	**CHECK HARNESS BETWEEN ECM AND FRONT OXYGEN (A/F) SENSOR CONNECTOR.** 1) Turn the ignition switch to OFF. 2) Measure the voltage between ECM and chassis ground. ***Connector & terminal*** ***(B136) No. 5 (+) — Chassis ground (–):*** ***(B136) No. 6 (+) — Chassis ground (–):***	Is the voltage 10 V or more?	Repair the short circuit of harness to power supply between ECM and front oxygen (A/F) sensor connector.	Go to step **2**.
2	**CHECK GROUND CIRCUIT FOR ECM.** 1) Disconnect the connector from ECM. 2) Measure the resistance between ECM and chassis ground. ***Connector & terminal*** ***(B134) No. 3 — Chassis ground:*** ***(B134) No. 4 — Chassis ground:*** ***(B134) No. 6 — Chassis ground:*** ***(B137) No. 1 — Chassis ground:*** ***(B137) No. 3 — Chassis ground:***	Is the resistance less than 5 Ω?	Repair the poor contact of ECM connector.	Repair the harness and connector. NOTE: In this case, repair the following item: • Open circuit of harness between ECM and engine ground • Poor contact of coupling connector

F: DTC P0037 HO2S HEATER CONTROL CIRCUIT LOW (BANK 1 SENSOR 2)

DTC DETECTING CONDITION:

- Detected when two consecutive driving cycles with fault occur.
- GENERAL DESCRIPTION <Ref. to GD(H4SO)-17, DTC P0037 HO2S HEATER CONTROL CIRCUIT LOW (BANK 1 SENSOR 2), Diagnostic Trouble Code (DTC) Detecting Criteria.>

CAUTION:

After servicing or replacing faulty parts, perform Clear Memory Mode <Ref. to EN(H4SO)(diag)-54, OPERATION, Clear Memory Mode.>, and Inspection Mode <Ref. to EN(H4SO)(diag)-42, PROCEDURE, Inspection Mode.>.

WIRING DIAGRAM:

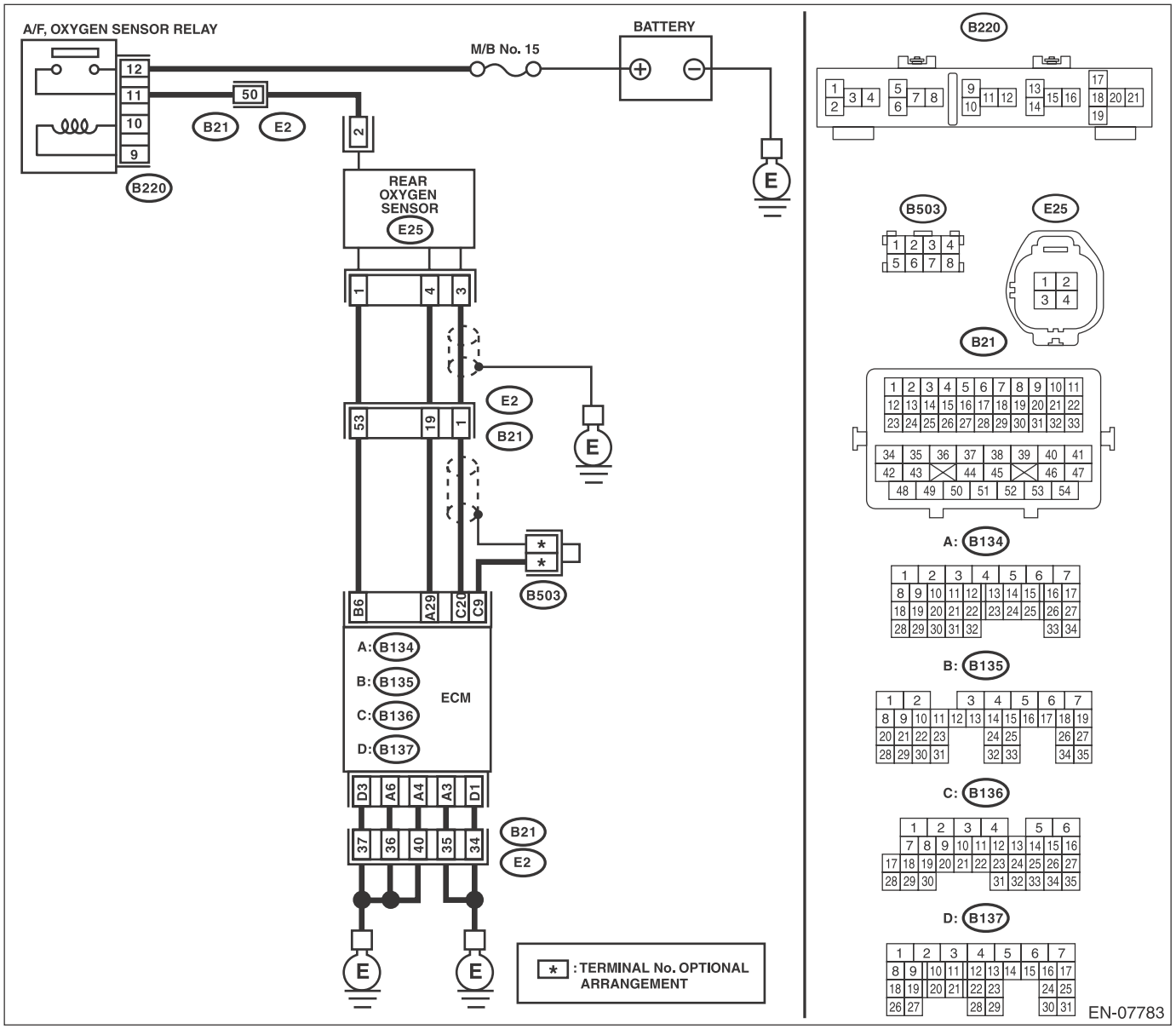

	Step	Check	Yes	No
1	**CHECK POWER SUPPLY TO REAR OXYGEN SENSOR.** 1) Turn the ignition switch to OFF. 2) Disconnect the connector from rear oxygen sensor. 3) Turn the ignition switch to ON. 4) Measure the voltage between rear oxygen sensor connector and engine ground. ***Connector & terminal*** ***(E25) No. 2 (+) — Engine ground (–):***	Is the voltage 10 V or more?	Go to step **2**.	Repair the power supply line. NOTE: In this case, repair the following item: • Open circuit in harness between A/F, oxygen sensor relay connector and rear oxygen sensor connector • Poor contact of A/F, oxygen sensor relay connector • Poor contact of coupling connector
2	**CHECK HARNESS BETWEEN ECM AND REAR OXYGEN SENSOR CONNECTOR.** 1) Turn the ignition switch to OFF. 2) Disconnect the connector from ECM. 3) Measure the resistance between the ECM and oxygen sensor connector. ***Connector & terminal*** ***(B135) No. 6 — (E25) No. 1:***	Is the resistance less than 1 Ω?	Go to step **3**.	Repair the harness and connector. NOTE: In this case, repair the following item: • Open circuit in harness between ECM and rear oxygen sensor connector • Poor contact of coupling connector
3	**CHECK GROUND CIRCUIT FOR ECM.** Measure the resistance of harness between ECM and chassis ground. ***Connector & terminal*** ***(B134) No. 3 — Chassis ground:*** ***(B134) No. 4 — Chassis ground:*** ***(B134) No. 6 — Chassis ground:*** ***(B137) No. 1 — Chassis ground:*** ***(B137) No. 3 — Chassis ground:***	Is the resistance less than 5 Ω?	Go to step **4**.	Repair the harness and connector. NOTE: In this case, repair the following item: • Open circuit of harness between ECM and engine ground • Poor contact of ECM connector • Poor contact of coupling connector
4	**CHECK REAR OXYGEN SENSOR.** Measure the resistance between rear oxygen sensor connector terminals. ***Terminals*** ***No. 2 — No. 1:***	Is the resistance 5 — 7 Ω?	Repair the poor contact of ECM connector.	Replace the rear oxygen sensor. <Ref. to FU(H4SO)-37, Rear Oxygen Sensor.>

G: DTC P0038 HO2S HEATER CONTROL CIRCUIT HIGH (BANK 1 SENSOR 2)

DTC DETECTING CONDITION:

- Detected when two consecutive driving cycles with fault occur.
- GENERAL DESCRIPTION <Ref. to GD(H4SO)-19, DTC P0038 HO2S HEATER CONTROL CIRCUIT HIGH (BANK 1 SENSOR 2), Diagnostic Trouble Code (DTC) Detecting Criteria.>

CAUTION:
After servicing or replacing faulty parts, perform Clear Memory Mode <Ref. to EN(H4SO)(diag)-54, OPERATION, Clear Memory Mode.>, and Inspection Mode <Ref. to EN(H4SO)(diag)-42, PROCEDURE, Inspection Mode.>.

WIRING DIAGRAM:

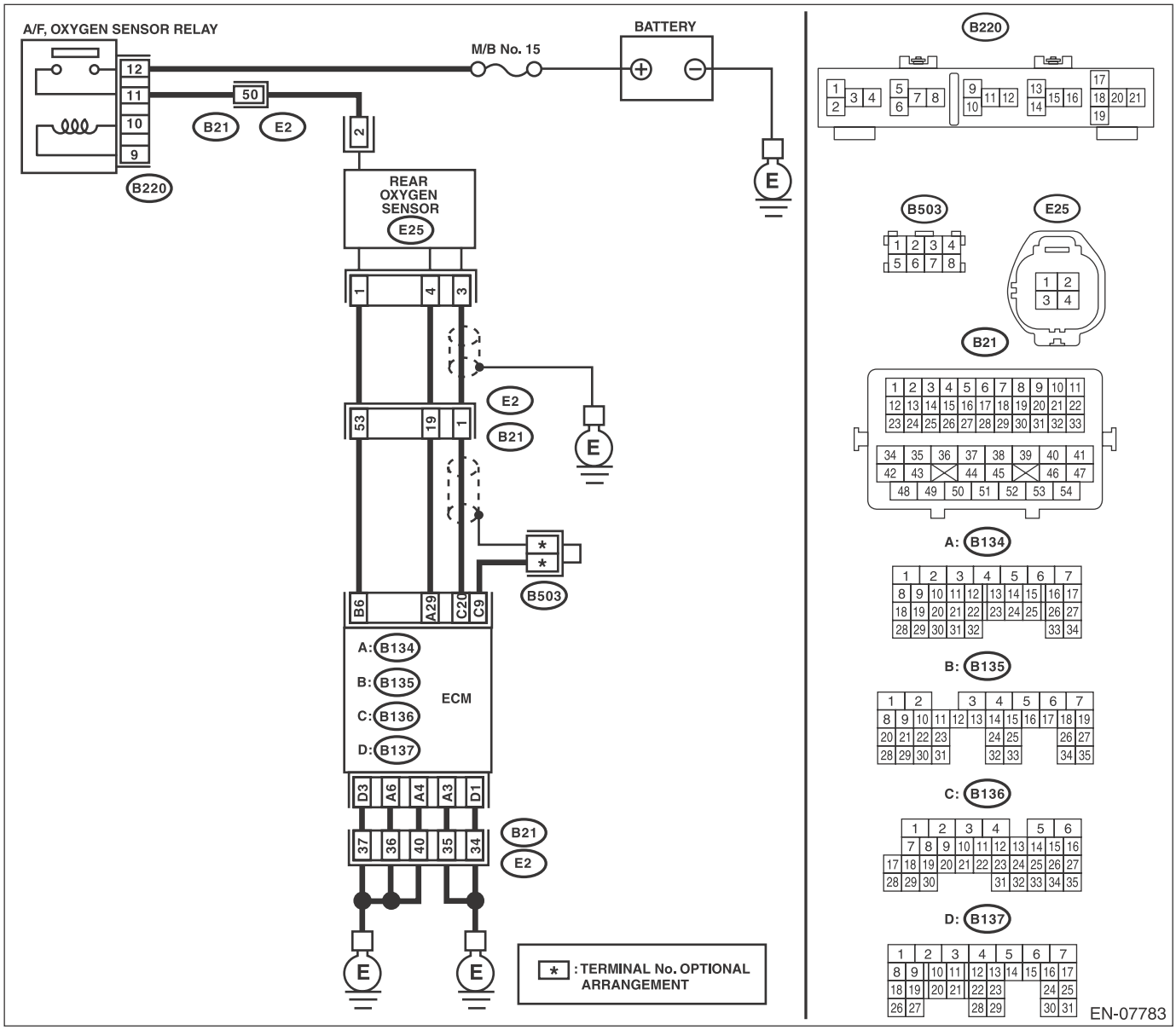

Step		Check	Yes	No
1	**CHECK HARNESS BETWEEN ECM AND REAR OXYGEN SENSOR CONNECTOR.** 1) Turn the ignition switch to OFF. 2) Measure the voltage between ECM and chassis ground. ***Connector & terminal*** ***(B135) No. 6 (+) — Chassis ground (–):***	Is the voltage 10 V or more?	Repair the short circuit of harness to power supply between ECM and rear oxygen sensor connector.	Go to step **2**.

	Step	Check	Yes	No
2	**CHECK GROUND CIRCUIT FOR ECM.** 1) Disconnect the connector from ECM. 2) Measure the resistance between ECM and chassis ground. ***Connector & terminal*** ***(B134) No. 3 — Chassis ground:*** ***(B134) No. 4 — Chassis ground:*** ***(B134) No. 6 — Chassis ground:*** ***(B137) No. 1 — Chassis ground:*** ***(B137) No. 3 — Chassis ground:***	Is the resistance less than 5 Ω?	Repair the poor contact of ECM connector.	Repair the harness and connector. NOTE: In this case, repair the following item: • Open circuit of harness between ECM and engine ground • Poor contact of coupling connector

H: DTC P0068 MAP/MAF - THROTTLE POSITION CORRELATION

DTC DETECTING CONDITION:

- Detected when two consecutive driving cycles with fault occur.
- GENERAL DESCRIPTION <Ref. to GD(H4SO)-21, DTC P0068 MAP/MAF - THROTTLE POSITION CORRELATION, Diagnostic Trouble Code (DTC) Detecting Criteria.>

CAUTION:
After servicing or replacing faulty parts, perform Clear Memory Mode <Ref. to EN(H4SO)(diag)-54, OPERATION, Clear Memory Mode.>, and Inspection Mode <Ref. to EN(H4SO)(diag)-42, PROCEDURE, Inspection Mode.>.

WIRING DIAGRAM:

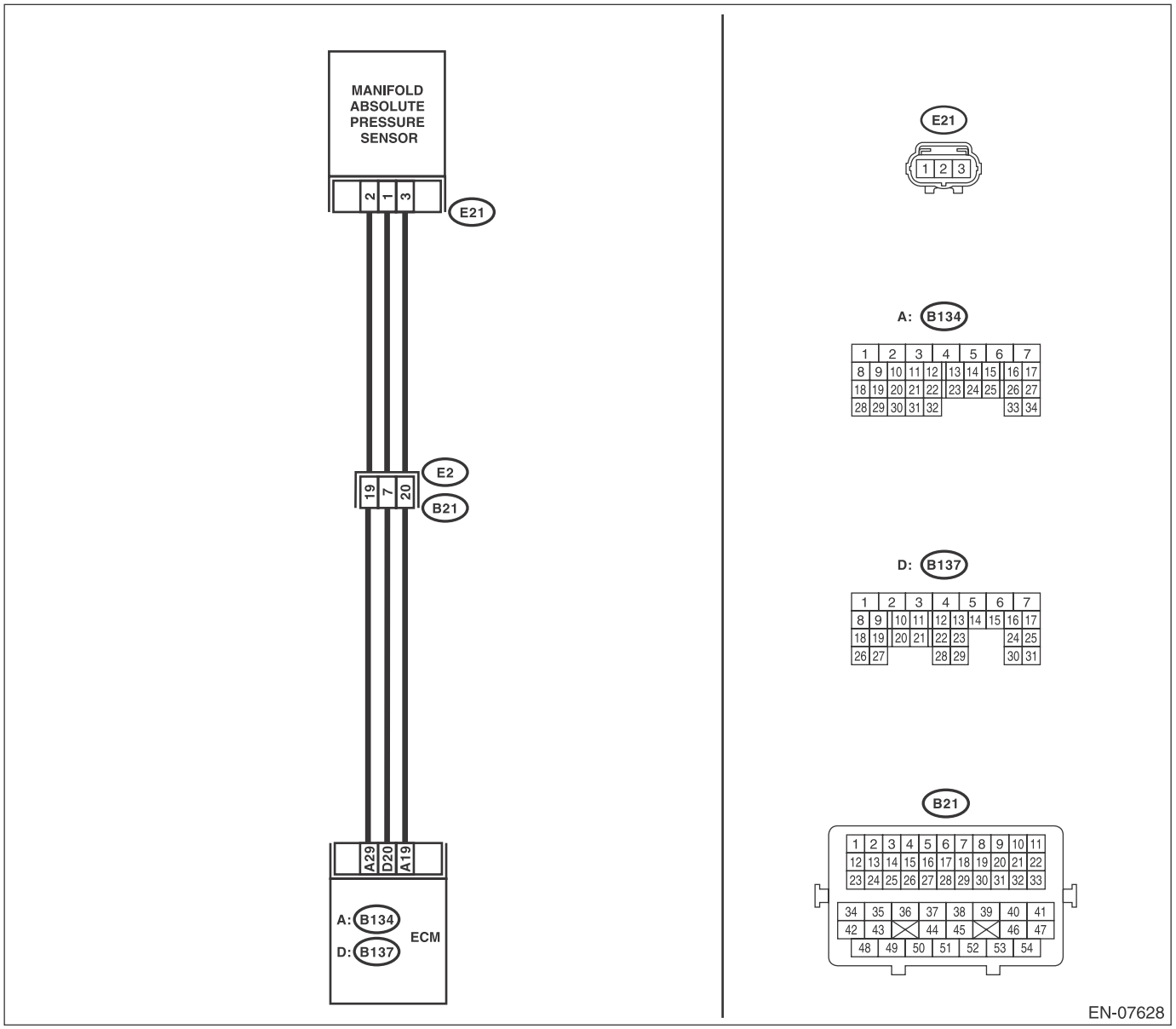

Step		Check	Yes	No
1	**CHECK AIR INTAKE SYSTEM.**	Are there holes, loose bolts or disconnection of hose on air intake system?	Repair the air intake system.	Go to step **2**.

	Step	Check	Yes	No
2	**CHECK MANIFOLD ABSOLUTE PRESSURE SENSOR.** 1) Start the engine and warm up engine until coolant temperature is higher than 75°C (167°F). 2) For CVT models, set the select lever to "P" range or "N" range, and for MT models, place the shift lever in the neutral position. 3) Turn the A/C switch to OFF. 4) Turn all the accessory switches to OFF. 5) Read the data of intake manifold pressure sensor signal using Subaru Select Monitor or general scan tool. NOTE: • Subaru Select Monitor For detailed operation procedures, refer to "READ CURRENT DATA FOR ENGINE". <Ref. to EN(H4SO)(diag)-34, Subaru Select Monitor.> • General scan tool For detailed operation procedures, refer to the "General Scan Tool Instruction Manual".	Is the measured value 73.3 — 106.6 kPa (550 — 800 mmHg, 21.65 — 31.50 inHg) when the ignition is turned ON, and 20.0 — 46.7 kPa (150 — 350 mmHg, 5.91 — 13.78 inHg) during idling?	Go to step **3**.	Replace the manifold absolute pressure sensor. <Ref. to FU(H4SO)-30, Manifold Absolute Pressure Sensor.>
3	**CHECK THROTTLE OPENING ANGLE.** Read the data of throttle position signal using Subaru Select Monitor or general scan tool. NOTE: • Subaru Select Monitor For detailed operation procedures, refer to "READ CURRENT DATA FOR ENGINE". <Ref. to EN(H4SO)(diag)-34, Subaru Select Monitor.> • General scan tool For detailed operation procedures, refer to the "General Scan Tool Instruction Manual".	Is the measured value less than 5% when throttle is fully closed?	Go to step **4**.	Replace the electronic throttle control. <Ref. to FU(H4SO)-14, Throttle Body.>
4	**CHECK THROTTLE OPENING ANGLE.**	Is the measured value 85% or more when throttle is fully open?	Replace the manifold absolute pressure sensor. <Ref. to FU(H4SO)-30, Manifold Absolute Pressure Sensor.>	Replace the electronic throttle control. <Ref. to FU(H4SO)-14, Throttle Body.>

I: DTC P0076 INTAKE VALVE CONTROL SOLENOID CIRCUIT LOW (BANK 1)

DTC DETECTING CONDITION:

- Immediately at fault recognition
- GENERAL DESCRIPTION <Ref. to GD(H4SO)-23, DTC P0076 INTAKE VALVE CONTROL SOLENOID CIRCUIT LOW (BANK 1), Diagnostic Trouble Code (DTC) Detecting Criteria.>

TROUBLE SYMPTOM:

Improper idling

CAUTION:

After servicing or replacing faulty parts, perform Clear Memory Mode <Ref. to EN(H4SO)(diag)-54, OPERATION, Clear Memory Mode.>, and Inspection Mode <Ref. to EN(H4SO)(diag)-42, PROCEDURE, Inspection Mode.>.

WIRING DIAGRAM:

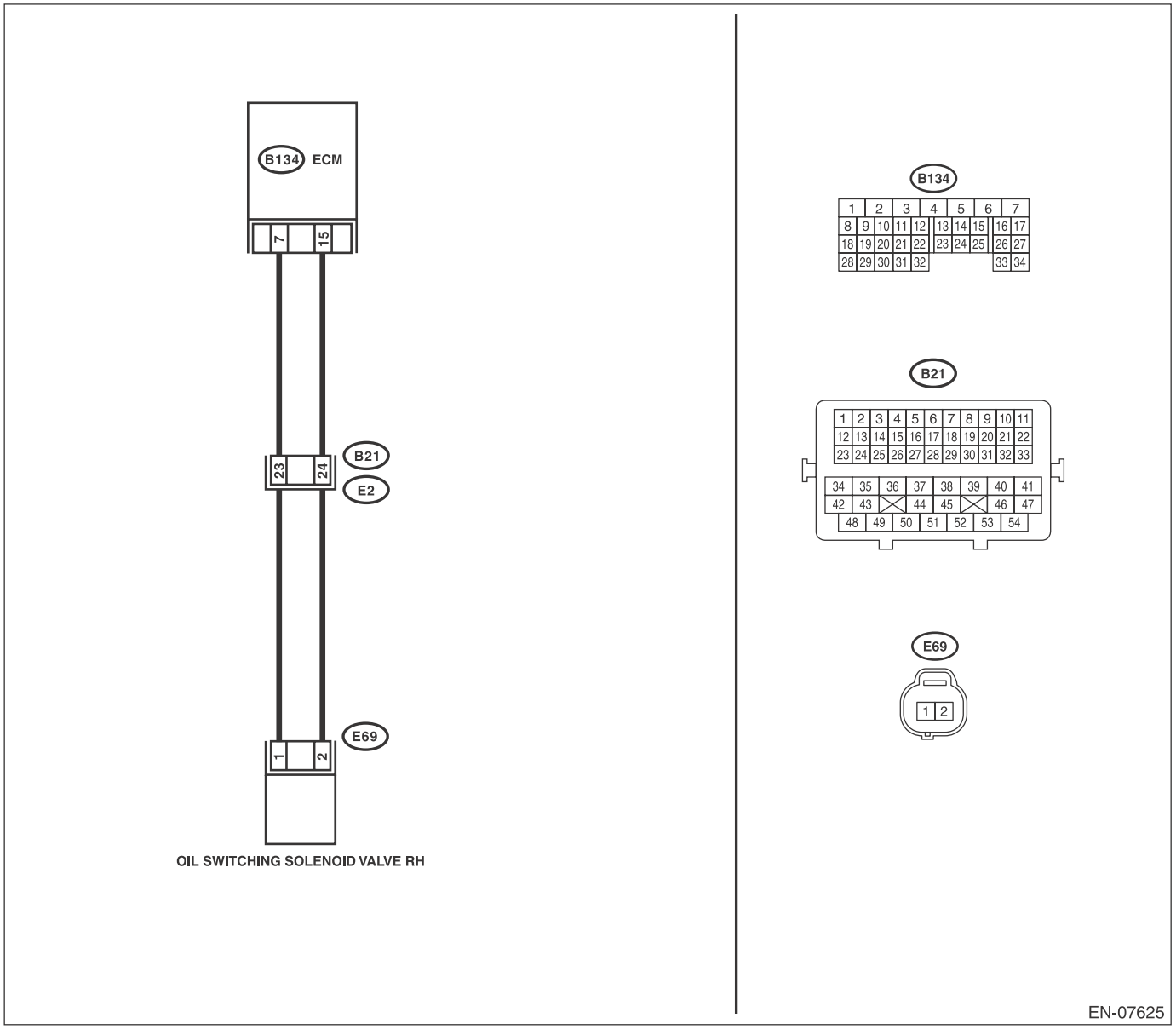

	Step	Check	Yes	No
1	**CHECK HARNESS BETWEEN ECM AND OIL SWITCHING SOLENOID VALVE RH CONNECTOR.** 1) Turn the ignition switch to OFF. 2) Disconnect the connectors from the ECM and oil switching solenoid valve RH. 3) Measure the resistance of harness between ECM and oil switching solenoid valve RH. ***Connector & terminal*** ***(B134) No. 7 — (E69) No. 1:*** ***(B134) No. 15 — (E69) No. 2:***	Is the resistance less than 1 Ω?	Go to step **2**.	Repair the harness and connector. NOTE: In this case, repair the following item: • Open circuit in harness between ECM and oil switching solenoid valve RH connector • Poor contact of coupling connector
2	**CHECK HARNESS BETWEEN ECM AND OIL SWITCHING SOLENOID VALVE RH CONNECTOR.** Measure the resistance between ECM and chassis ground. ***Connector & terminal*** ***(B134) No. 7 — Chassis ground:*** ***(B134) No. 15 — Chassis ground:***	Is the resistance 1 MΩ or more?	Go to step **3**.	Repair the short circuit to ground in harness between ECM and oil switching solenoid valve RH connector.
3	**CHECK OIL SWITCHING SOLENOID VALVE RH.** Measure the resistance between oil switching solenoid valve RH terminals. ***Terminals*** ***No. 1 — No. 2:***	Is the resistance 6 — 12 Ω?	Repair the poor contact of ECM and oil switching solenoid valve RH connector.	Replace the oil switching solenoid valve RH. <Ref. to ME(H4SO)-90, Oil Switching Solenoid Valve.>

J: DTC P0077 INTAKE VALVE CONTROL SOLENOID CIRCUIT HIGH (BANK 1)

DTC DETECTING CONDITION:

- Immediately at fault recognition
- GENERAL DESCRIPTION <Ref. to GD(H4SO)-24, DTC P0077 INTAKE VALVE CONTROL SOLENOID CIRCUIT HIGH (BANK 1), Diagnostic Trouble Code (DTC) Detecting Criteria.>

TROUBLE SYMPTOM:

Improper idling

CAUTION:

After servicing or replacing faulty parts, perform Clear Memory Mode <Ref. to EN(H4SO)(diag)-54, OPERATION, Clear Memory Mode.>, and Inspection Mode <Ref. to EN(H4SO)(diag)-42, PROCEDURE, Inspection Mode.>.

WIRING DIAGRAM:

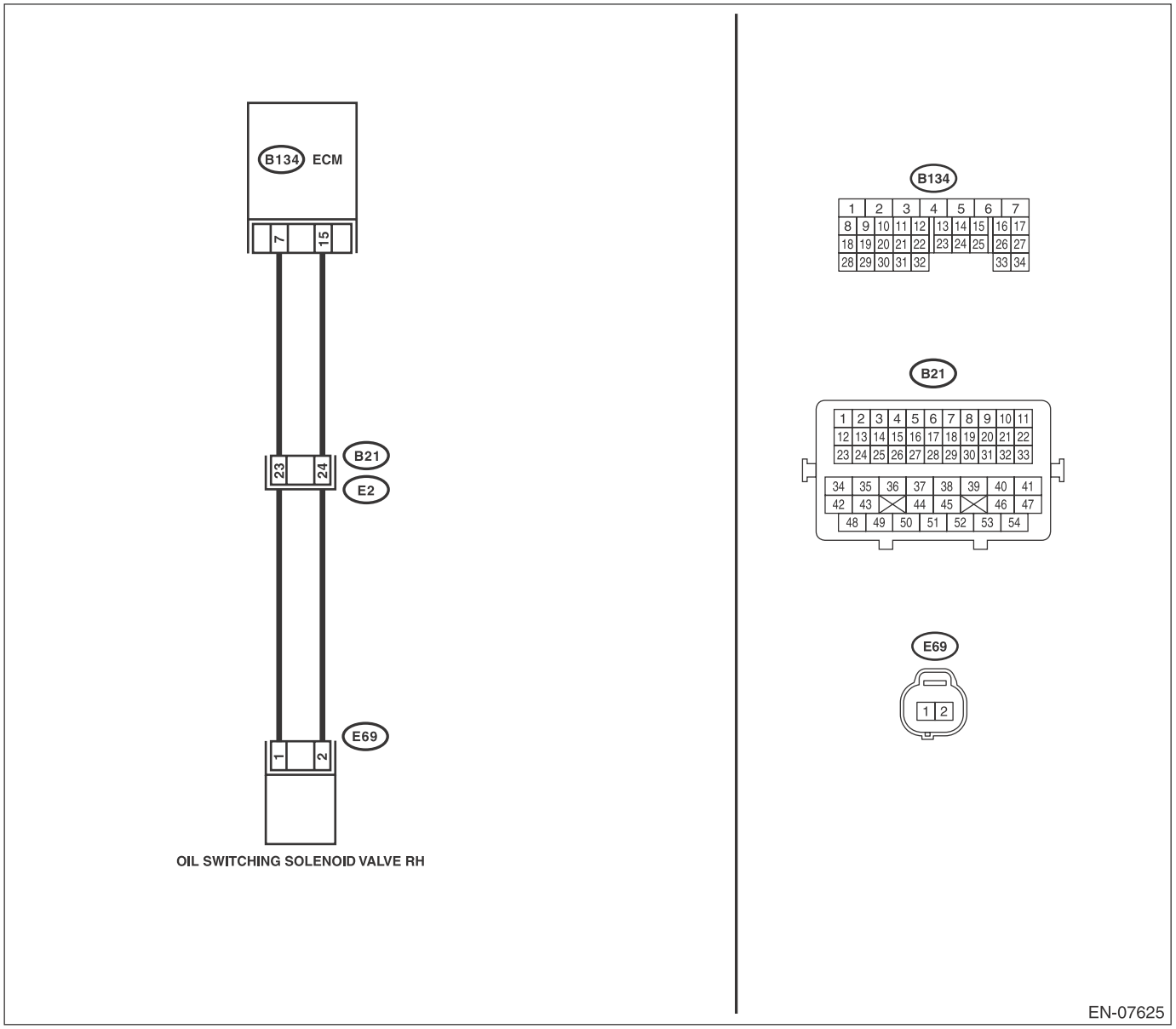

	Step	Check	Yes	No
1	**CHECK HARNESS BETWEEN ECM AND OIL SWITCHING SOLENOID VALVE RH CONNECTOR.** 1) Turn the ignition switch to OFF. 2) Disconnect the connectors from the ECM and oil switching solenoid valve RH. 3) Measure the voltage between ECM and chassis ground. ***Connector & terminal*** ***(B134) No. 7 (+) — Chassis ground (–):*** ***(B134) No. 15 (+) — Chassis ground (–):***	Is the voltage less than 1 V?	Go to step **2**.	Repair the short circuit to power supply in harness between ECM and oil switching solenoid valve RH connector.
2	**CHECK HARNESS BETWEEN ECM AND OIL SWITCHING SOLENOID VALVE RH CONNECTOR.** Measure the resistance of harness between ECM and oil switching solenoid valve RH connector. ***Connector & terminal*** ***(B134) No. 7 — (E69) No. 1:*** ***(B134) No. 15 — (E69) No. 2:***	Is the resistance less than 1 Ω?	Go to step **3**.	Repair the harness and connector. NOTE: In this case, repair the following item: • Open circuit in harness between ECM and oil switching solenoid valve RH connector • Poor contact of coupling connector
3	**CHECK OIL SWITCHING SOLENOID VALVE RH.** Measure the resistance between oil switching solenoid valve RH terminals. ***Terminals*** ***No. 1 — No. 2:***	Is the resistance 6 — 12 Ω?	Repair the poor contact of ECM and oil switching solenoid valve RH connector.	Replace the oil switching solenoid valve RH. <Ref. to ME(H4SO)-90, Oil Switching Solenoid Valve.>

K: DTC P0082 INTAKE VALVE CONTROL SOLENOID CIRCUIT LOW (BANK 2)

DTC DETECTING CONDITION:

- Immediately at fault recognition
- GENERAL DESCRIPTION <Ref. to GD(H4SO)-24, DTC P0082 INTAKE VALVE CONTROL SOLENOID CIRCUIT LOW (BANK 2), Diagnostic Trouble Code (DTC) Detecting Criteria.>

TROUBLE SYMPTOM:

Improper idling

CAUTION:

After servicing or replacing faulty parts, perform Clear Memory Mode <Ref. to EN(H4SO)(diag)-54, OPERATION, Clear Memory Mode.>, and Inspection Mode <Ref. to EN(H4SO)(diag)-42, PROCEDURE, Inspection Mode.>.

WIRING DIAGRAM:

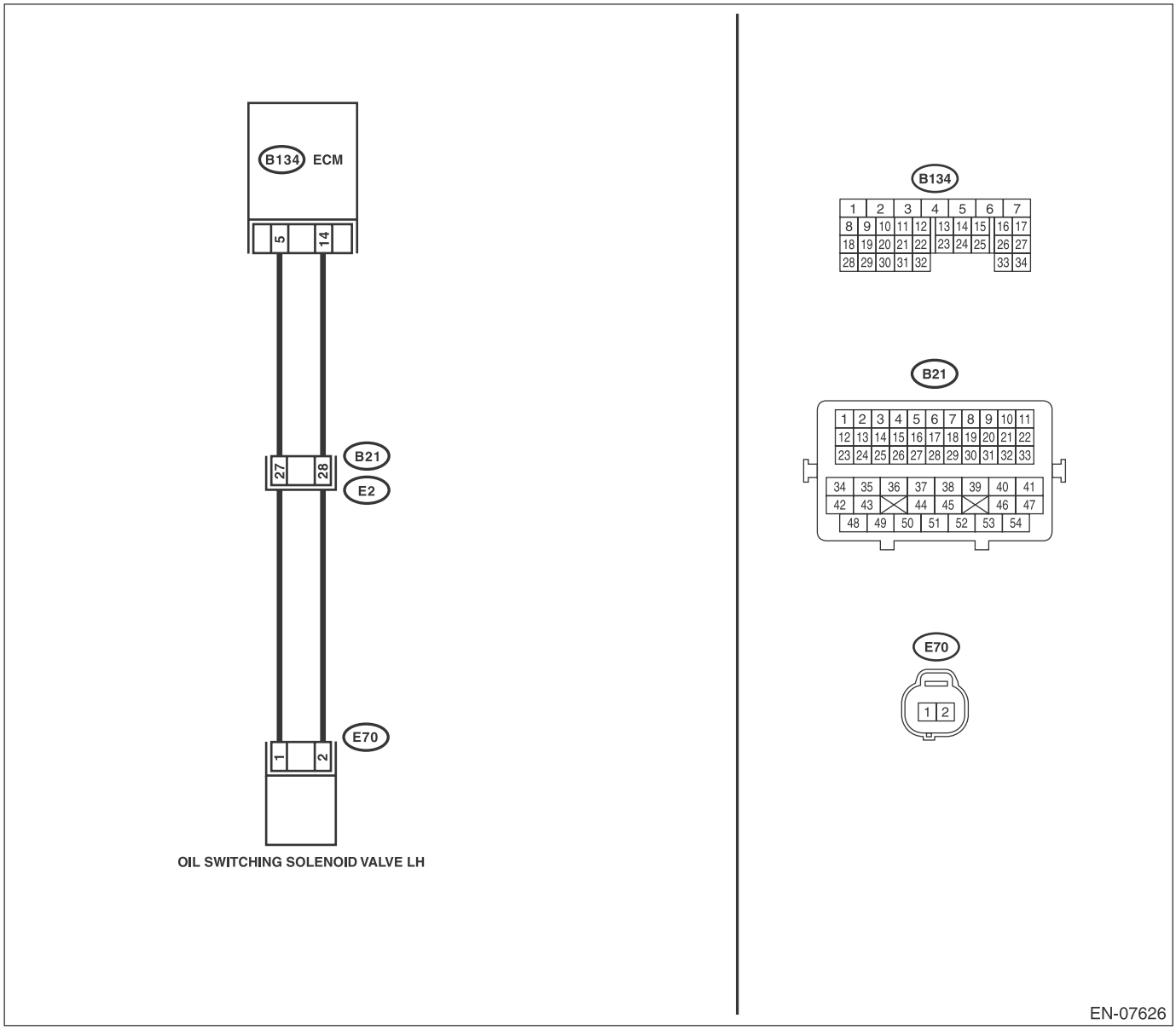

	Step	Check	Yes	No
1	**CHECK HARNESS BETWEEN ECM AND OIL SWITCHING SOLENOID VALVE LH CONNECTOR.** 1) Turn the ignition switch to OFF. 2) Disconnect the connectors from the ECM and oil switching solenoid valve LH. 3) Measure the resistance between ECM and oil switching solenoid valve LH. ***Connector & terminal*** ***(B134) No. 5 — (E70) No. 1:*** ***(B134) No. 14 — (E70) No. 2:***	Is the resistance less than 1 Ω?	Go to step **2**.	Repair the harness and connector. NOTE: In this case, repair the following item: • Open circuit in harness between ECM and oil switching solenoid valve LH connector • Poor contact of coupling connector
2	**CHECK HARNESS BETWEEN ECM AND OIL SWITCHING SOLENOID VALVE LH CONNECTOR.** Measure the resistance between ECM and chassis ground. ***Connector & terminal*** ***(B134) No. 5 — Chassis ground:*** ***(B134) No. 14 — Chassis ground:***	Is the resistance 1 MΩ or more?	Go to step **3**.	Repair the short circuit to ground in harness between ECM and oil switching solenoid valve LH connector.
3	**CHECK OIL SWITCHING SOLENOID VALVE LH.** Measure the resistance between oil switching solenoid valve LH terminals. ***Terminals*** ***No. 1 — No. 2:***	Is the resistance 6 — 12 Ω?	Repair the poor contact of ECM and oil switching solenoid valve LH connector.	Replace the oil switching solenoid valve LH. <Ref. to ME(H4SO)-90, Oil Switching Solenoid Valve.>

L: DTC P0083 INTAKE VALVE CONTROL SOLENOID CIRCUIT HIGH (BANK 2)

DTC DETECTING CONDITION:

- Immediately at fault recognition
- GENERAL DESCRIPTION <Ref. to GD(H4SO)-24, DTC P0083 INTAKE VALVE CONTROL SOLENOID CIRCUIT HIGH (BANK 2), Diagnostic Trouble Code (DTC) Detecting Criteria.>

TROUBLE SYMPTOM:

Improper idling

CAUTION:

After servicing or replacing faulty parts, perform Clear Memory Mode <Ref. to EN(H4SO)(diag)-54, OPERATION, Clear Memory Mode.>, and Inspection Mode <Ref. to EN(H4SO)(diag)-42, PROCEDURE, Inspection Mode.>.

WIRING DIAGRAM:

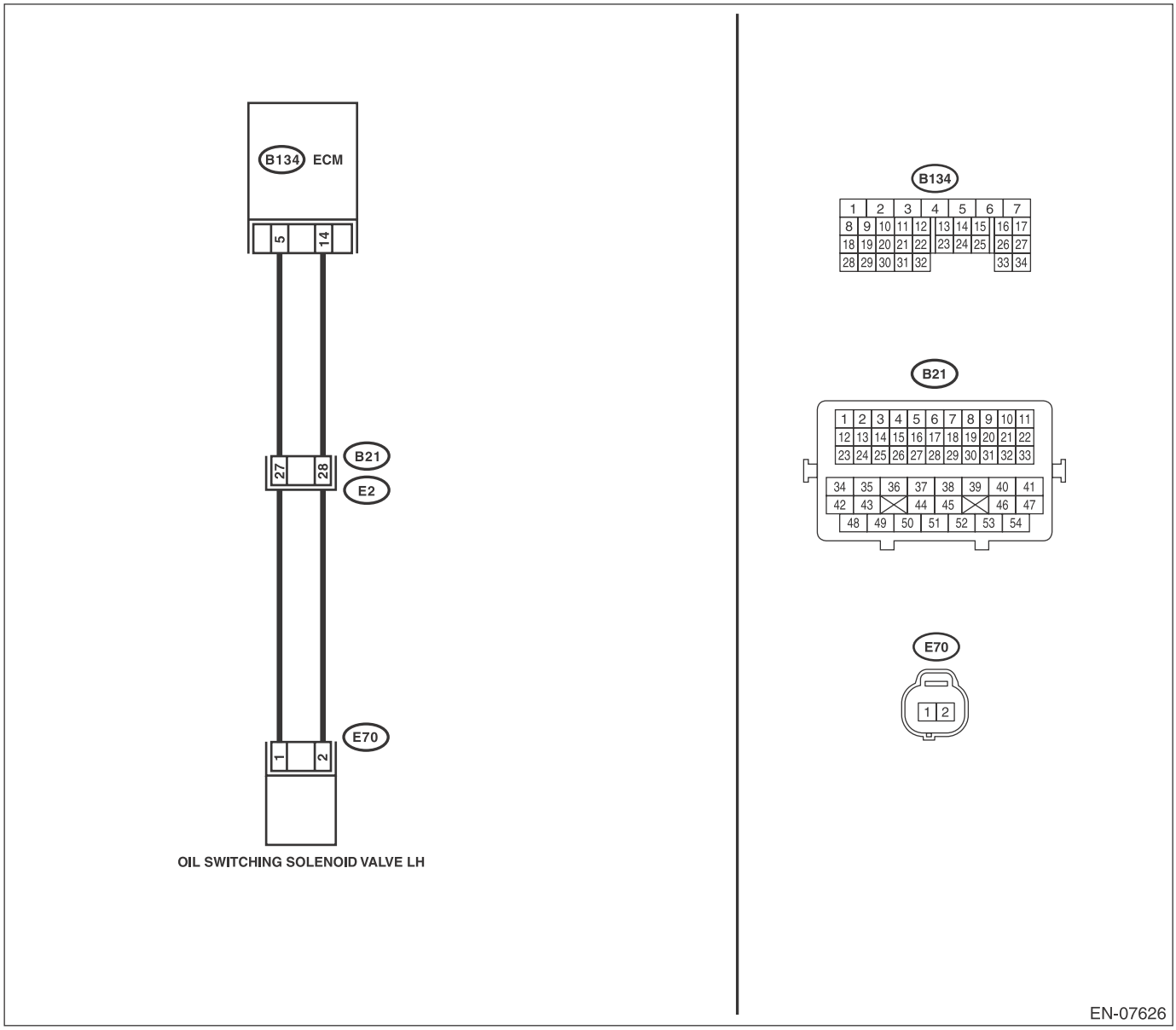

	Step	Check	Yes	No
1	**CHECK HARNESS BETWEEN ECM AND OIL SWITCHING SOLENOID VALVE LH CONNECTOR.** 1) Turn the ignition switch to OFF. 2) Disconnect the connectors from the ECM and oil switching solenoid valve LH. 3) Measure the voltage between ECM and chassis ground. ***Connector & terminal*** ***(B134) No. 5 (+) — Chassis ground (–):*** ***(B134) No. 14 (+) — Chassis ground (–):***	Is the voltage less than 1 V?	Go to step **2**.	Repair the short circuit to power supply in harness between ECM and oil switching solenoid valve LH connector.
2	**CHECK HARNESS BETWEEN ECM AND OIL SWITCHING SOLENOID VALVE LH CONNECTOR.** Measure the resistance between ECM and oil switching solenoid valve LH connector. ***Connector & terminal*** ***(B134) No. 5 — (E70) No. 1:*** ***(B134) No. 14 — (E70) No. 2:***	Is the resistance less than 1 Ω?	Go to step **3**.	Repair the harness and connector. NOTE: In this case, repair the following item: • Open circuit in harness between ECM and oil switching solenoid valve LH connector • Poor contact of coupling connector
3	**CHECK OIL SWITCHING SOLENOID VALVE LH.** Measure the resistance between oil switching solenoid valve LH terminals. ***Terminals*** ***No. 1 — No. 2:***	Is the resistance 6 — 12 Ω?	Repair the poor contact of ECM and oil switching solenoid valve LH connector.	Replace the oil switching solenoid valve LH. <Ref. to ME(H4SO)-90, Oil Switching Solenoid Valve.>

M: DTC P0101 MASS OR VOLUME AIR FLOW CIRCUIT RANGE/PERFORMANCE

DTC DETECTING CONDITION:

- Detected when two consecutive driving cycles with fault occur.
- GENERAL DESCRIPTION <Ref. to GD(H4SO)-25, DTC P0101 MASS OR VOLUME AIR FLOW CIRCUIT RANGE/PERFORMANCE, Diagnostic Trouble Code (DTC) Detecting Criteria.>

TROUBLE SYMPTOM:

- Improper idling
- Engine stalls.
- Poor driving performance

CAUTION:

After servicing or replacing faulty parts, perform Clear Memory Mode <Ref. to EN(H4SO)(diag)-54, OPERATION, Clear Memory Mode.>, and Inspection Mode <Ref. to EN(H4SO)(diag)-42, PROCEDURE, Inspection Mode.>.

WIRING DIAGRAM:

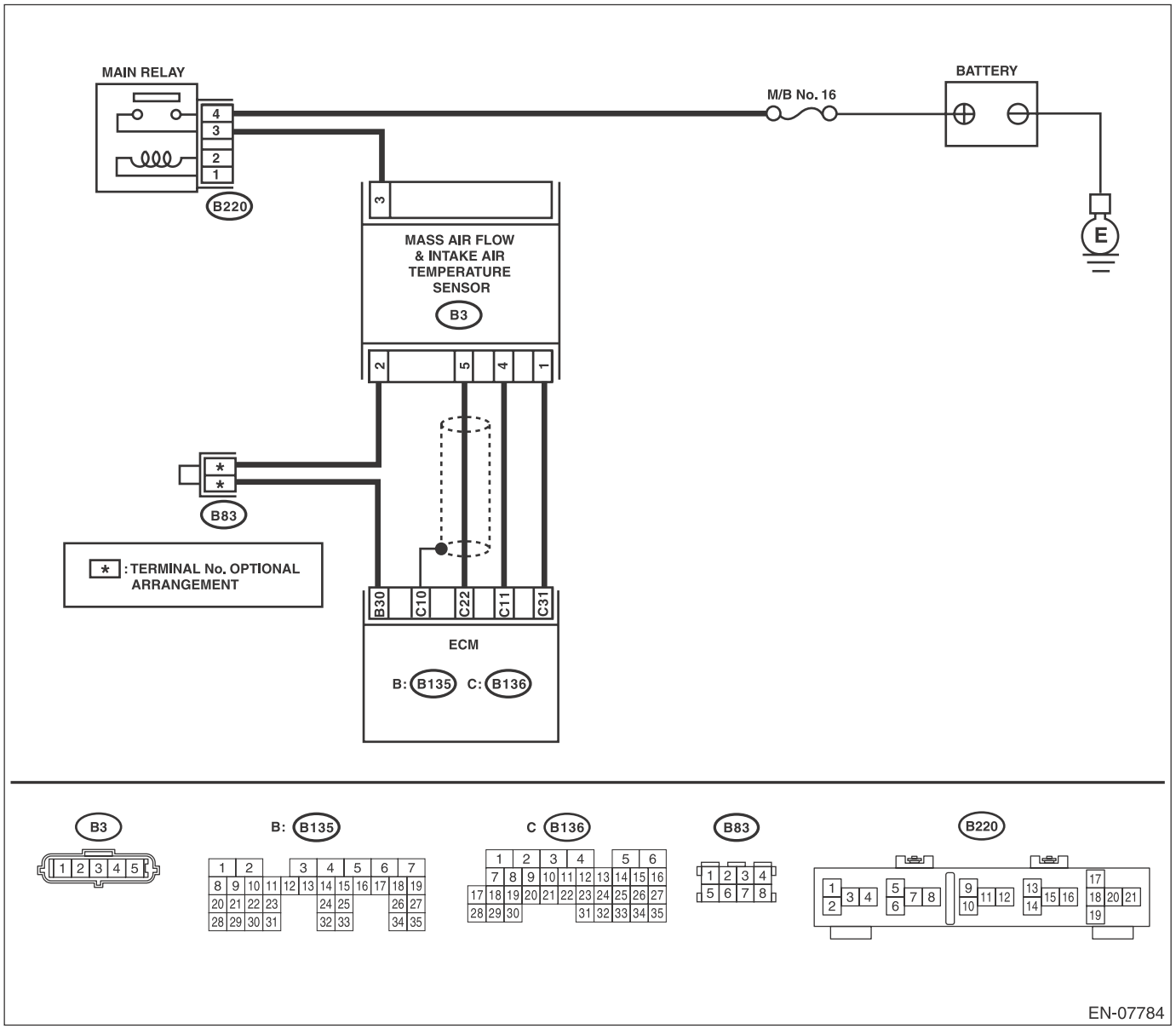

Step		Check	Yes	No
1	**CHECK FOR ANY OTHER DTC ON DISPLAY.**	Is any other DTC displayed?	Check the appropriate DTC using the “List of Diagnostic Trouble Code (DTC)”. <Ref. to EN(H4SO)(diag)-79, List of Diagnostic Trouble Code (DTC).>	Replace the mass air flow and intake air temperature sensor. <Ref. to FU(H4SO)-29, Mass Air Flow and Intake Air Temperature Sensor.>

N: DTC P0102 MASS OR VOLUME AIR FLOW CIRCUIT LOW INPUT

DTC DETECTING CONDITION:

- Immediately at fault recognition
- GENERAL DESCRIPTION <Ref. to GD(H4SO)-27, DTC P0102 MASS OR VOLUME AIR FLOW CIRCUIT LOW INPUT, Diagnostic Trouble Code (DTC) Detecting Criteria.>

TROUBLE SYMPTOM:

- Improper idling
- Engine stalls.
- Poor driving performance

CAUTION:
After servicing or replacing faulty parts, perform Clear Memory Mode <Ref. to EN(H4SO)(diag)-54, OPERATION, Clear Memory Mode.>, and Inspection Mode <Ref. to EN(H4SO)(diag)-42, PROCEDURE, Inspection Mode.>.

WIRING DIAGRAM:

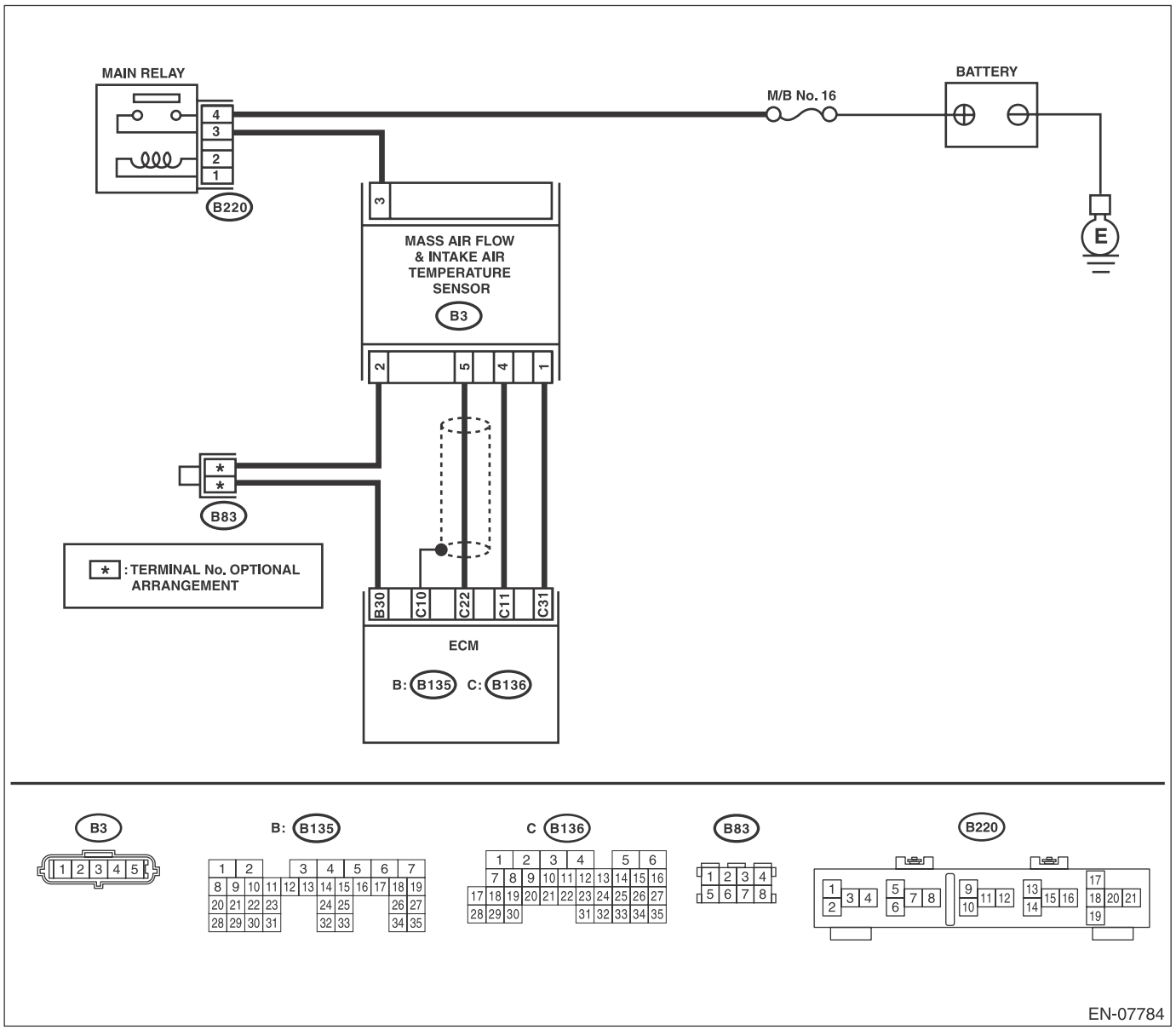

	Step	Check	Yes	No
1	**CHECK CURRENT DATA.** 1) Start the engine. 2) Read the data of air flow sensor signal using Subaru Select Monitor or general scan tool. NOTE: • Subaru Select Monitor For detailed operation procedures, refer to "READ CURRENT DATA FOR ENGINE". <Ref. to EN(H4SO)(diag)-34, Subaru Select Monitor.> • General scan tool For detailed operation procedures, refer to the general scan tool operation manual.	Is the voltage less than 0.2 V?	Go to step **2**.	Even if DTC is detected, the circuit has returned to a normal condition at this time. Reproduce the failure, and then perform the diagnosis again. NOTE: In this case, temporary poor contact of connector, temporary open or short circuit of harness may be the cause.
2	**CHECK POWER SUPPLY OF MASS AIR FLOW AND INTAKE AIR TEMPERATURE SENSOR.** 1) Turn the ignition switch to OFF. 2) Disconnect the connector from mass air flow and intake air temperature sensor. 3) Turn the ignition switch to ON. 4) Measure the voltage between mass air flow and intake air temperature sensor connector and engine ground. ***Connector & terminal*** ***(B3) No. 3 (+) — Engine ground (–):***	Is the voltage 10 V or more?	Go to step **3**.	Repair the harness and connector. NOTE: In this case, repair the following item: • Open circuit in harness between main relay and mass air flow and intake air temperature sensor connector • Poor contact of main relay connector
3	**CHECK HARNESS BETWEEN ECM AND MASS AIR FLOW AND INTAKE AIR TEMPERATURE SENSOR CONNECTOR.** 1) Turn the ignition switch to OFF. 2) Disconnect the connector from ECM. 3) Measure the resistance of harness between ECM and the mass air flow and intake air temperature sensor connector. ***Connector & terminal*** ***(B136) No. 22 — (B3) No. 5:***	Is the resistance less than 1 Ω?	Go to step **4**.	Repair the open circuit of harness between the ECM and mass air flow and intake air temperature sensor connector.
4	**CHECK HARNESS BETWEEN ECM AND MASS AIR FLOW AND INTAKE AIR TEMPERATURE SENSOR CONNECTOR.** Measure the resistance between ECM and chassis ground. ***Connector & terminal*** ***(B136) No. 22 — Chassis ground:***	Is the resistance 1 MΩ or more?	Go to step **5**.	Repair the ground short circuit of harness between ECM and mass air flow and intake air temperature sensor connector.
5	**CHECK FOR POOR CONTACT.** Check for poor contact of ECM and mass air flow and intake air temperature sensor connector.	Is there poor contact of the ECM or the mass air flow and intake air temperature sensor connector?	Repair the poor contact of ECM or mass air flow and intake air temperature sensor connector.	Replace the mass air flow and intake air temperature sensor. <Ref. to FU(H4SO)-29, Mass Air Flow and Intake Air Temperature Sensor.>

O: DTC P0103 MASS OR VOLUME AIR FLOW CIRCUIT HIGH INPUT

DTC DETECTING CONDITION:

- Immediately at fault recognition
- GENERAL DESCRIPTION <Ref. to GD(H4SO)-28, DTC P0103 MASS OR VOLUME AIR FLOW CIRCUIT HIGH INPUT, Diagnostic Trouble Code (DTC) Detecting Criteria.>

TROUBLE SYMPTOM:

- Improper idling
- Engine stalls.
- Poor driving performance

CAUTION:
After servicing or replacing faulty parts, perform Clear Memory Mode <Ref. to EN(H4SO)(diag)-54, OPERATION, Clear Memory Mode.>, and Inspection Mode <Ref. to EN(H4SO)(diag)-42, PROCEDURE, Inspection Mode.>.

WIRING DIAGRAM:

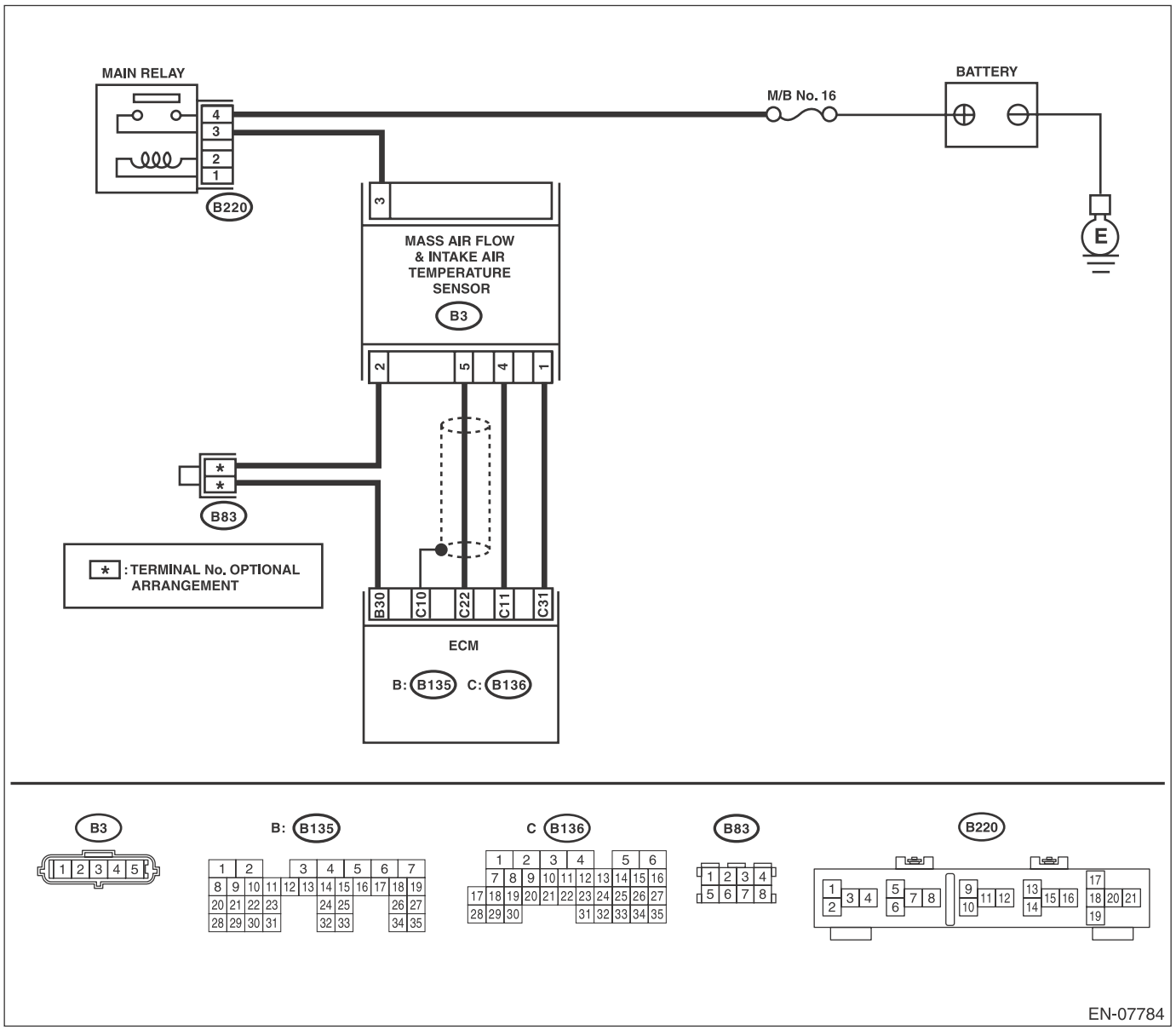

	Step	Check	Yes	No
1	**CHECK CURRENT DATA.** 1) Start the engine. 2) Read the data of air flow sensor signal using Subaru Select Monitor or general scan tool. NOTE: • Subaru Select Monitor For detailed operation procedures, refer to "READ CURRENT DATA FOR ENGINE". <Ref. to EN(H4SO)(diag)-34, Subaru Select Monitor.> • General scan tool For detailed operation procedures, refer to the general scan tool operation manual.	Is the voltage 5 V or more?	Go to step **2**.	Even if DTC is detected, the circuit has returned to a normal condition at this time. Reproduce the failure, and then perform the diagnosis again. NOTE: In this case, temporary poor contact of connector, temporary open or short circuit of harness may be the cause.
2	**CHECK HARNESS BETWEEN ECM AND MASS AIR FLOW AND INTAKE AIR TEMPERATURE SENSOR CONNECTOR.** 1) Turn the ignition switch to OFF. 2) Disconnect the connector from mass air flow and intake air temperature sensor. 3) Start the engine. 4) Read the data of air flow sensor signal using Subaru Select Monitor or general scan tool. NOTE: • Subaru Select Monitor For detailed operation procedures, refer to "READ CURRENT DATA FOR ENGINE". <Ref. to EN(H4SO)(diag)-34, Subaru Select Monitor.> • General scan tool For detailed operation procedures, refer to the general scan tool operation manual.	Is the voltage 5 V or more?	Repair the short circuit of harness to power supply between ECM and mass air flow and intake air temperature sensor connector.	Go to step **3**.
3	**CHECK HARNESS BETWEEN ECM AND MASS AIR FLOW AND INTAKE AIR TEMPERATURE SENSOR CONNECTOR.** 1) Turn the ignition switch to OFF. 2) Measure the resistance of harness between mass air flow and intake air temperature sensor connector and engine ground. ***Connector & terminal*** ***(B3) No. 4 — Engine ground:***	Is the resistance less than 5 Ω?	Go to step **4**.	Repair the harness and connector. NOTE: In this case, repair the following item: • Open circuit in harness between ECM and mass air flow and intake air temperature sensor connector. • Poor contact of ECM connector
4	**CHECK FOR POOR CONTACT.** Check for poor contact of mass air flow and intake air temperature sensor connector.	Is there poor contact in the mass air flow and intake air temperature sensor connector?	Repair any poor contact of the mass air flow and intake air temperature sensor connector.	Replace the mass air flow and intake air temperature sensor. <Ref. to FU(H4SO)-29, Mass Air Flow and Intake Air Temperature Sensor.>

P: DTC P0107 MANIFOLD ABSOLUTE PRESSURE/BAROMETRIC PRESSURE CIRCUIT LOW INPUT

DTC DETECTING CONDITION:

- Immediately at fault recognition
- GENERAL DESCRIPTION <Ref. to GD(H4SO)-29, DTC P0107 MANIFOLD ABSOLUTE PRESSURE/ BAROMETRIC PRESSURE CIRCUIT LOW INPUT, Diagnostic Trouble Code (DTC) Detecting Criteria.>

CAUTION:

After servicing or replacing faulty parts, perform Clear Memory Mode <Ref. to EN(H4SO)(diag)-54, OPERATION, Clear Memory Mode.>, and Inspection Mode <Ref. to EN(H4SO)(diag)-42, PROCEDURE, Inspection Mode.>.

WIRING DIAGRAM:

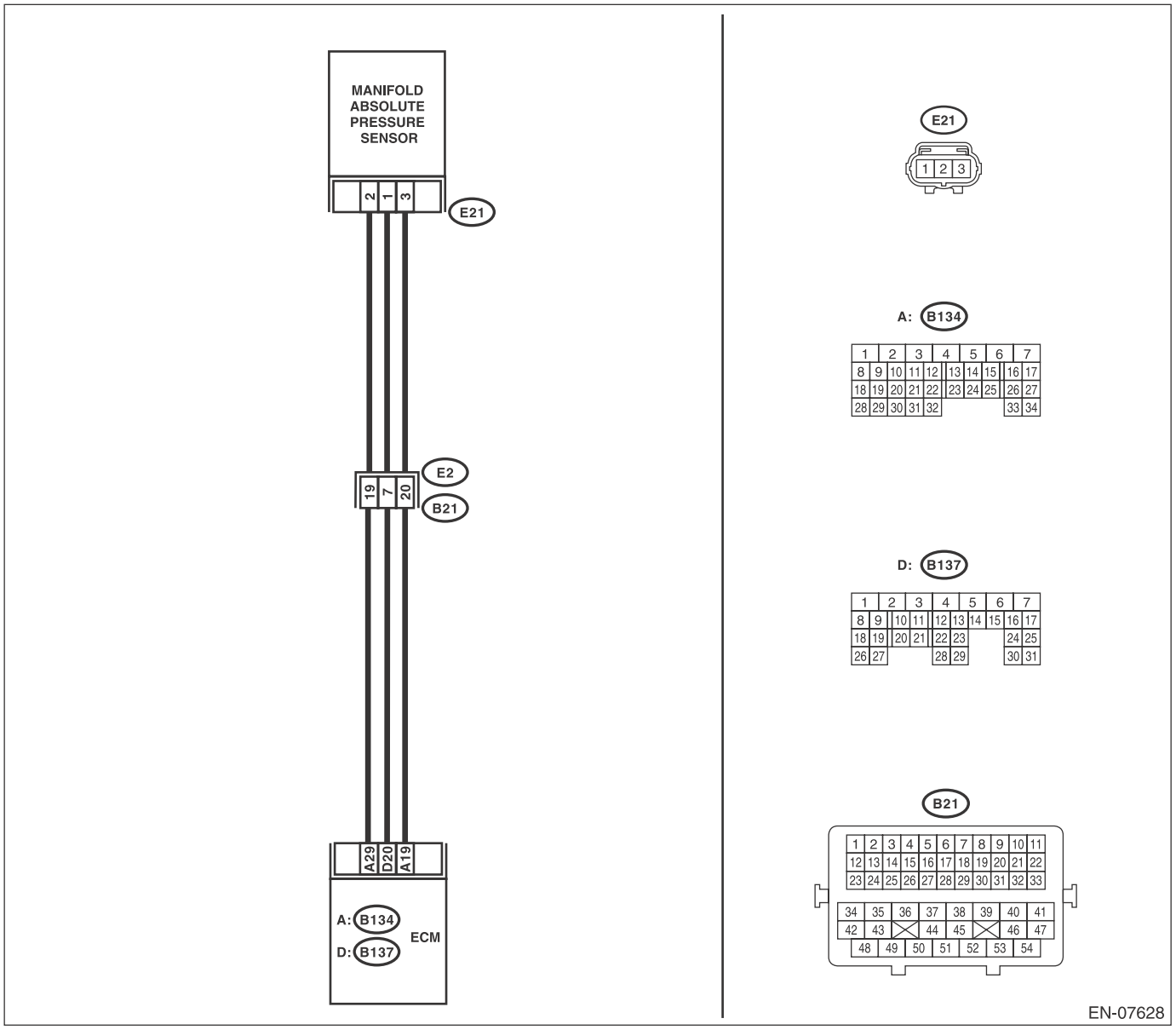

	Step	Check	Yes	No
1	**CHECK CURRENT DATA.** 1) Start the engine. 2) Read the data of intake manifold absolute pressure signal using Subaru Select Monitor or general scan tool. NOTE: • Subaru Select Monitor For detailed operation procedures, refer to "READ CURRENT DATA FOR ENGINE". <Ref. to EN(H4SO)(diag)-34, Subaru Select Monitor.> • General scan tool For detailed operation procedures, refer to the general scan tool operation manual.	Is the measured value less than 13.3 kPa (100 mmHg, 3.94 inHg)?	Go to step **2**.	Even if DTC is detected, the circuit has returned to a normal condition at this time. Reproduce the failure, and then perform the diagnosis again. NOTE: In this case, temporary poor contact of connector, temporary open or short circuit of harness may be the cause.
2	**CHECK POWER SUPPLY OF MANIFOLD ABSOLUTE PRESSURE SENSOR.** 1) Turn the ignition switch to OFF. 2) Disconnect the connector from manifold absolute pressure sensor. 3) Turn the ignition switch to ON. 4) Measure the voltage between manifold absolute pressure sensor connector and engine ground. ***Connector & terminal*** ***(E21) No. 3 (+) — Engine ground (–):***	Is the voltage 4.5 V or more?	Go to step **3**.	Repair the harness and connector. NOTE: In this case, repair the following item: • Open circuit of harness between ECM and manifold absolute pressure sensor connector. • Poor contact of ECM connector • Poor contact of coupling connector
3	**CHECK HARNESS BETWEEN ECM AND MANIFOLD ABSOLUTE PRESSURE SENSOR CONNECTOR.** 1) Turn the ignition switch to OFF. 2) Disconnect the connector from ECM. 3) Measure the resistance of harness between ECM and manifold absolute pressure sensor connector. ***Connector & terminal*** ***(B137) No. 20 — (E21) No. 1:***	Is the resistance less than 1 Ω?	Go to step **4**.	Repair the harness and connector. NOTE: In this case, repair the following item: • Open circuit of harness between ECM and manifold absolute pressure sensor connector. • Poor contact of coupling connector
4	**CHECK HARNESS BETWEEN ECM AND MANIFOLD ABSOLUTE PRESSURE SENSOR CONNECTOR.** Measure the resistance between ECM and chassis ground. ***Connector & terminal*** ***(B137) No. 20 — Chassis ground:***	Is the resistance 1 MΩ or more?	Go to step **5**.	Repair ground short circuit of harness between ECM and manifold absolute pressure sensor connector.
5	**CHECK FOR POOR CONTACT.** Check for poor contact of ECM and manifold absolute pressure sensor connector.	Is there poor contact of ECM or manifold absolute pressure sensor connector?	Repair the poor contact of ECM or manifold absolute pressure sensor connector.	Replace the manifold absolute pressure sensor. <Ref. to FU(H4SO)-30, Manifold Absolute Pressure Sensor.>

Q: DTC P0108 MANIFOLD ABSOLUTE PRESSURE/BAROMETRIC PRESSURE CIRCUIT HIGH INPUT

DTC DETECTING CONDITION:

- Immediately at fault recognition
- GENERAL DESCRIPTION <Ref. to GD(H4SO)-30, DTC P0108 MANIFOLD ABSOLUTE PRESSURE/ BAROMETRIC PRESSURE CIRCUIT HIGH INPUT, Diagnostic Trouble Code (DTC) Detecting Criteria.>

CAUTION:

After servicing or replacing faulty parts, perform Clear Memory Mode <Ref. to EN(H4SO)(diag)-54, OPERATION, Clear Memory Mode.>, and Inspection Mode <Ref. to EN(H4SO)(diag)-42, PROCEDURE, Inspection Mode.>.

WIRING DIAGRAM:

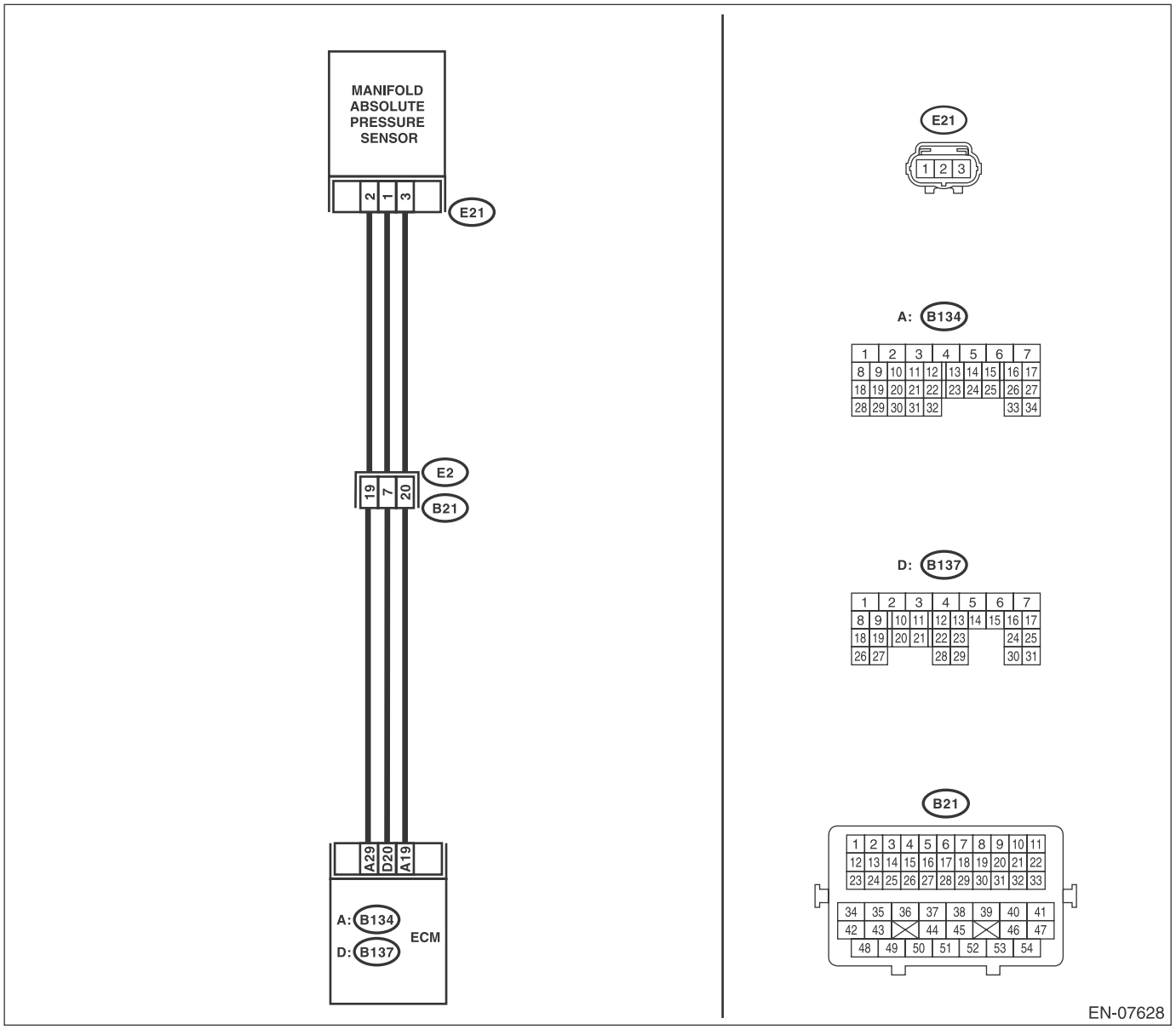

	Step	Check	Yes	No
1	**CHECK CURRENT DATA.** 1) Start the engine. 2) Read the data of intake manifold absolute pressure signal using Subaru Select Monitor or general scan tool. NOTE: • Subaru Select Monitor For detailed operation procedures, refer to "READ CURRENT DATA FOR ENGINE". <Ref. to EN(H4SO)(diag)-34, Subaru Select Monitor.> • General scan tool For detailed operation procedures, refer to the general scan tool operation manual.	Is the measured value 119.5 kPa (896.5 mmHg, 35.29 inHg) or more?	Go to step **2**.	Even if DTC is detected, the circuit has returned to a normal condition at this time. Reproduce the failure, and then perform the diagnosis again. NOTE: In this case, temporary poor contact of connector, temporary open or short circuit of harness may be the cause.
2	**CHECK HARNESS BETWEEN ECM AND MANIFOLD ABSOLUTE PRESSURE SENSOR CONNECTOR.** 1) Turn the ignition switch to OFF. 2) Disconnect the connector from manifold absolute pressure sensor. 3) Start the engine. 4) Read the data of intake manifold absolute pressure signal using Subaru Select Monitor or general scan tool. NOTE: • Subaru Select Monitor For detailed operation procedures, refer to "READ CURRENT DATA FOR ENGINE". <Ref. to EN(H4SO)(diag)-34, Subaru Select Monitor.> • General scan tool For detailed operation procedures, refer to the general scan tool operation manual.	Is the measured value 119.5 kPa (896.5 mmHg, 35.29 inHg) or more?	Repair the short circuit of harness to power supply between ECM and manifold absolute pressure sensor connector.	Go to step **3**.
3	**CHECK HARNESS BETWEEN ECM AND MANIFOLD ABSOLUTE PRESSURE SENSOR CONNECTOR.** 1) Turn the ignition switch to OFF. 2) Measure the resistance of harness between manifold absolute pressure sensor connector and engine ground. ***Connector & terminal*** ***(E21) No. 2 — Engine ground:***	Is the resistance less than 5 Ω?	Go to step **4**.	Repair the harness and connector. NOTE: In this case, repair the following item: • Open circuit of harness between ECM and manifold absolute pressure sensor connector. • Poor contact of ECM connector • Poor contact of coupling connector
4	**CHECK FOR POOR CONTACT.** Check for poor contact of manifold absolute pressure sensor connector.	Is there poor contact of manifold absolute pressure sensor connector?	Repair the poor contact of manifold absolute pressure sensor connector.	Replace the manifold absolute pressure sensor. <Ref. to FU(H4SO)-30, Manifold Absolute Pressure Sensor.>

R: DTC P0111 INTAKE AIR TEMPERATURE SENSOR 1 CIRCUIT RANGE/PERFORMANCE

DTC DETECTING CONDITION:

- Detected when two consecutive driving cycles with fault occur.
- GENERAL DESCRIPTION <Ref. to GD(H4SO)-31, DTC P0111 INTAKE AIR TEMPERATURE SENSOR 1 CIRCUIT RANGE/PERFORMANCE, Diagnostic Trouble Code (DTC) Detecting Criteria.>

TROUBLE SYMPTOM:

- Improper idling
- Poor driving performance

CAUTION:

After servicing or replacing faulty parts, perform Clear Memory Mode <Ref. to EN(H4SO)(diag)-54, OPERATION, Clear Memory Mode.>, and Inspection Mode <Ref. to EN(H4SO)(diag)-42, PROCEDURE, Inspection Mode.>.

WIRING DIAGRAM:

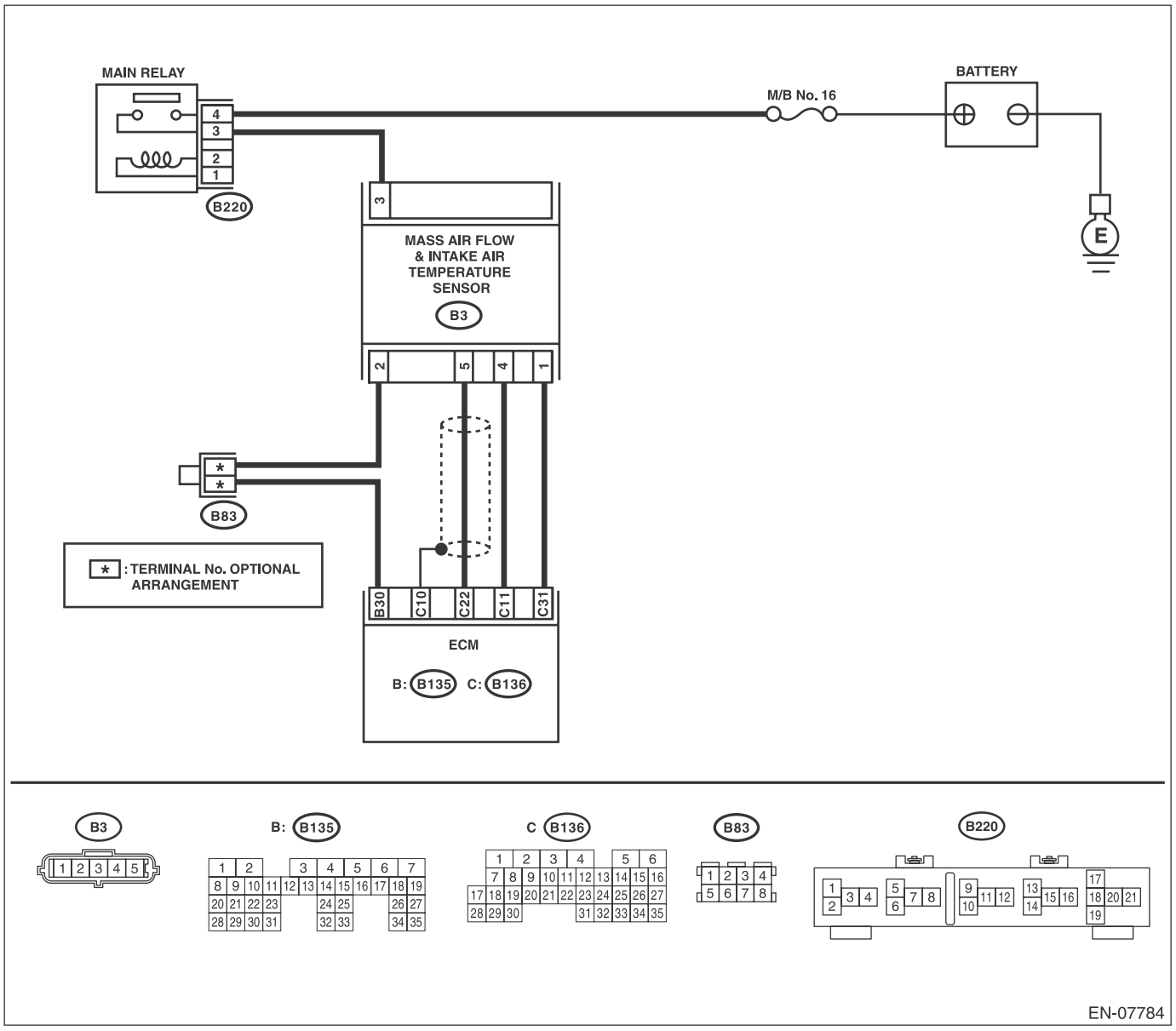

	Step	Check	Yes	No
1	**CHECK ENGINE COOLANT TEMPERATURE.** 1) Start the engine and warm up completely. 2) Measure the engine coolant temperature using the Subaru Select Monitor or general scan tool. NOTE: • Subaru Select Monitor For detailed operation procedures, refer to "READ CURRENT DATA FOR ENGINE". <Ref. to EN(H4SO)(diag)-34, Subaru Select Monitor.> • General scan tool For detailed operation procedures, refer to the general scan tool operation manual.	Is the temperature 75°C (167°F) or more?	Replace the mass air flow and intake air temperature sensor. <Ref. to FU(H4SO)-29, Mass Air Flow and Intake Air Temperature Sensor.>	Check for DTC P0125. <Ref. to EN(H4SO)(diag)-134, DTC P0125 INSUFFICIENT COOLANT TEMPERATURE FOR CLOSED LOOP FUEL CONTROL, Diagnostic Procedure with Diagnostic Trouble Code (DTC).>

S: DTC P0112 INTAKE AIR TEMPERATURE SENSOR 1 CIRCUIT LOW

DTC DETECTING CONDITION:

- Immediately at fault recognition
- GENERAL DESCRIPTION <Ref. to GD(H4SO)-33, DTC P0112 INTAKE AIR TEMPERATURE SENSOR 1 CIRCUIT LOW, Diagnostic Trouble Code (DTC) Detecting Criteria.>

TROUBLE SYMPTOM:

- Improper idling
- Poor driving performance

CAUTION:

After servicing or replacing faulty parts, perform Clear Memory Mode <Ref. to EN(H4SO)(diag)-54, OPERATION, Clear Memory Mode.>, and Inspection Mode <Ref. to EN(H4SO)(diag)-42, PROCEDURE, Inspection Mode.>.

WIRING DIAGRAM:

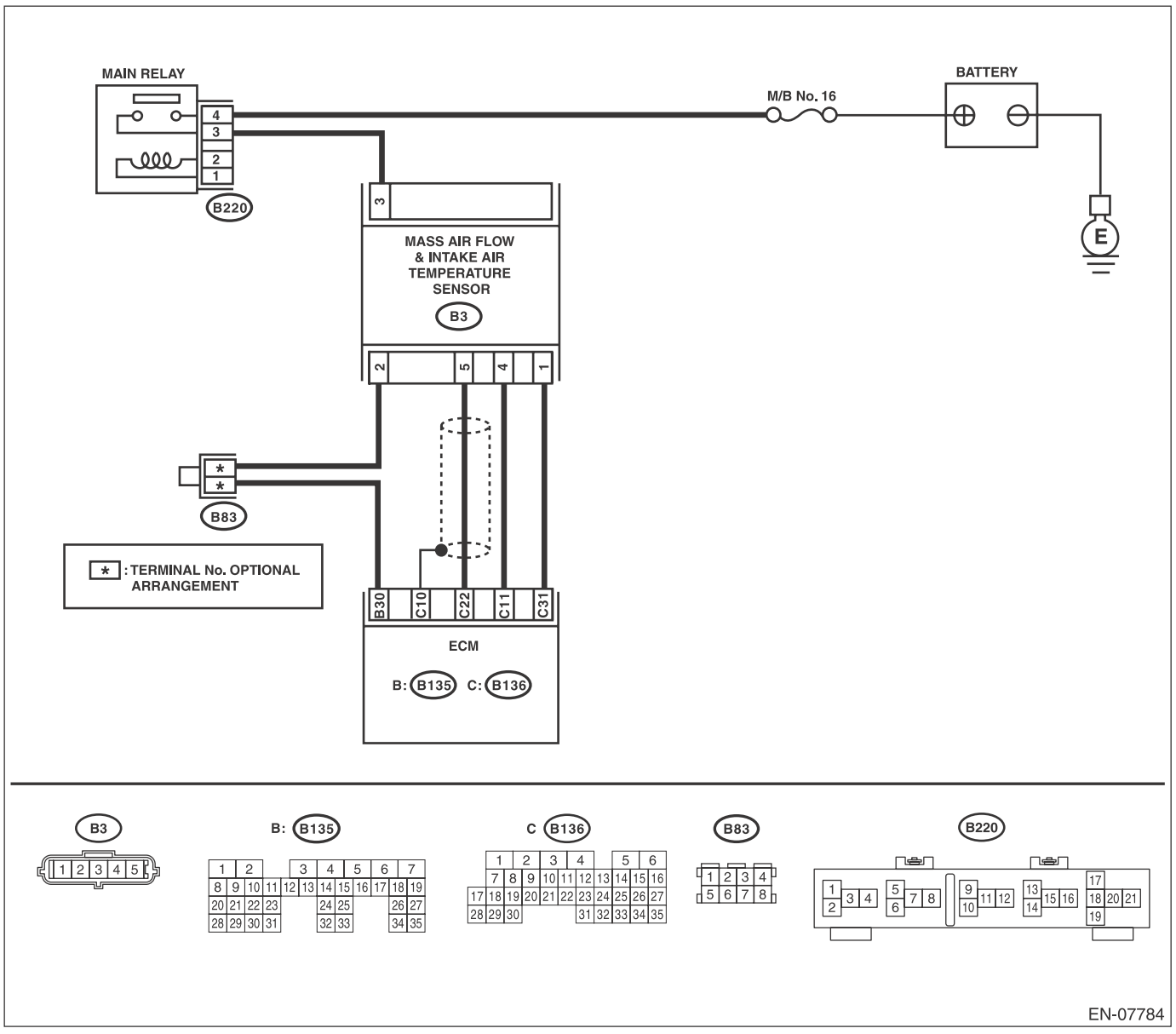

	Step	Check	Yes	No
1	**CHECK CURRENT DATA.** 1) Start the engine. 2) Read the data of intake air temperature sensor signal using Subaru Select Monitor or general scan tool. NOTE: • Subaru Select Monitor For detailed operation procedures, refer to "READ CURRENT DATA FOR ENGINE". <Ref. to EN(H4SO)(diag)-34, Subaru Select Monitor.> • General scan tool For detailed operation procedures, refer to the general scan tool operation manual.	Is the intake air temperature 120°C (248°F) or more?	Go to step **2**.	Even if DTC is detected, the circuit has returned to a normal condition at this time. Reproduce the failure, and then perform the diagnosis again. NOTE: In this case, temporary poor contact of connector, temporary open or short circuit of harness may be the cause.
2	**CHECK HARNESS BETWEEN ECM AND MASS AIR FLOW AND INTAKE AIR TEMPERATURE SENSOR CONNECTOR.** 1) Turn the ignition switch to OFF. 2) Disconnect the connector from ECM and mass air flow and intake air temperature sensor. 3) Measure the resistance between ECM and chassis ground. ***Connector & terminal*** ***(B136) No. 31 — Chassis ground:***	Is the resistance 1 MΩ or more?	Replace the mass air flow and intake air temperature sensor. <Ref. to FU(H4SO)-29, Mass Air Flow and Intake Air Temperature Sensor.>	Repair the ground short circuit of harness between ECM and mass air flow and intake air temperature sensor connector.

T: DTC P0113 INTAKE AIR TEMPERATURE SENSOR 1 CIRCUIT HIGH

DTC DETECTING CONDITION:

- Immediately at fault recognition
- GENERAL DESCRIPTION <Ref. to GD(H4SO)-34, DTC P0113 INTAKE AIR TEMPERATURE SENSOR 1 CIRCUIT HIGH, Diagnostic Trouble Code (DTC) Detecting Criteria.>

TROUBLE SYMPTOM:

- Improper idling
- Poor driving performance

CAUTION:

After servicing or replacing faulty parts, perform Clear Memory Mode <Ref. to EN(H4SO)(diag)-54, OPERATION, Clear Memory Mode.>, and Inspection Mode <Ref. to EN(H4SO)(diag)-42, PROCEDURE, Inspection Mode.>.

WIRING DIAGRAM:

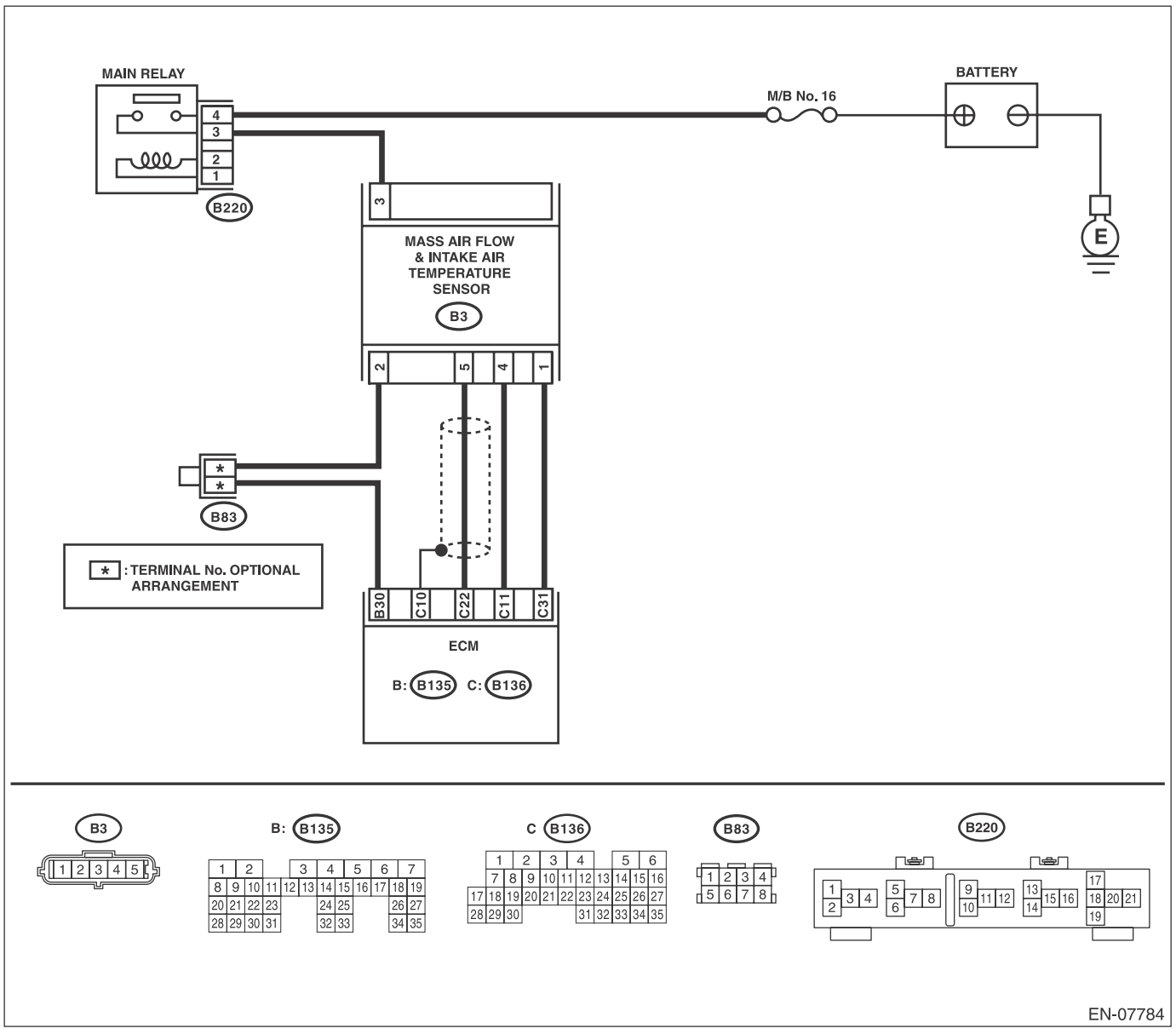

	Step	Check	Yes	No
1	**CHECK CURRENT DATA.** 1) Start the engine. 2) Read the data of intake air temperature sensor signal using Subaru Select Monitor or general scan tool. NOTE: • Subaru Select Monitor For detailed operation procedures, refer to "READ CURRENT DATA FOR ENGINE". <Ref. to EN(H4SO)(diag)-34, Subaru Select Monitor.> • General scan tool For detailed operation procedures, refer to the general scan tool operation manual.	Is the intake air temperature less than –40°C (–40°F)?	Go to step **2**.	Even if DTC is detected, the circuit has returned to a normal condition at this time. Reproduce the failure, and then perform the diagnosis again. NOTE: In this case, temporary poor contact of connector, temporary open or short circuit of harness may be the cause.
2	**CHECK FOR POOR CONTACT.** Check for poor contact of ECM and mass air flow and intake air temperature sensor connector.	Is there poor contact of the ECM or the mass air flow and intake air temperature sensor connector?	Repair the poor contact of ECM or mass air flow and intake air temperature sensor connector.	Go to step **3**.
3	**CHECK HARNESS BETWEEN ECM AND MASS AIR FLOW AND INTAKE AIR TEMPERATURE SENSOR CONNECTOR.** 1) Turn the ignition switch to OFF. 2) Disconnect the connector from ECM and mass air flow and intake air temperature sensor. 3) Measure the resistance of harness between ECM and the mass air flow and intake air temperature sensor connector. ***Connector & terminal*** ***(B136) No. 31 — (B3) No. 1:*** ***(B135) No. 30 — (B3) No. 2:***	Is the resistance less than 1 Ω?	Go to step **4**.	Repair the harness and connector. NOTE: In this case, repair the following item: • Open circuit in harness between ECM and mass air flow and intake air temperature sensor connector. • Poor contact of joint connector
4	**CHECK HARNESS BETWEEN ECM AND MASS AIR FLOW AND INTAKE AIR TEMPERATURE SENSOR CONNECTOR.** 1) Connect all connectors. 2) Turn the ignition switch to ON. 3) Measure the voltage between ECM and chassis ground. ***Connector & terminal*** ***(B136) No. 31 (+) — Chassis ground (–):***	Is the voltage 5 V or more?	Repair the short circuit of harness to power supply between ECM and mass air flow and intake air temperature sensor connector.	Replace the mass air flow and intake air temperature sensor. <Ref. to FU(H4SO)-29, Mass Air Flow and Intake Air Temperature Sensor.>

U: DTC P0117 ENGINE COOLANT TEMPERATURE CIRCUIT LOW

DTC DETECTING CONDITION:

- Immediately at fault recognition
- GENERAL DESCRIPTION <Ref. to GD(H4SO)-35, DTC P0117 ENGINE COOLANT TEMPERATURE CIRCUIT LOW, Diagnostic Trouble Code (DTC) Detecting Criteria.>

TROUBLE SYMPTOM:

- Hard to start
- Improper idling
- Poor driving performance

CAUTION:
After servicing or replacing faulty parts, perform Clear Memory Mode <Ref. to EN(H4SO)(diag)-54, OPERATION, Clear Memory Mode.>, and Inspection Mode <Ref. to EN(H4SO)(diag)-42, PROCEDURE, Inspection Mode.>.

WIRING DIAGRAM:

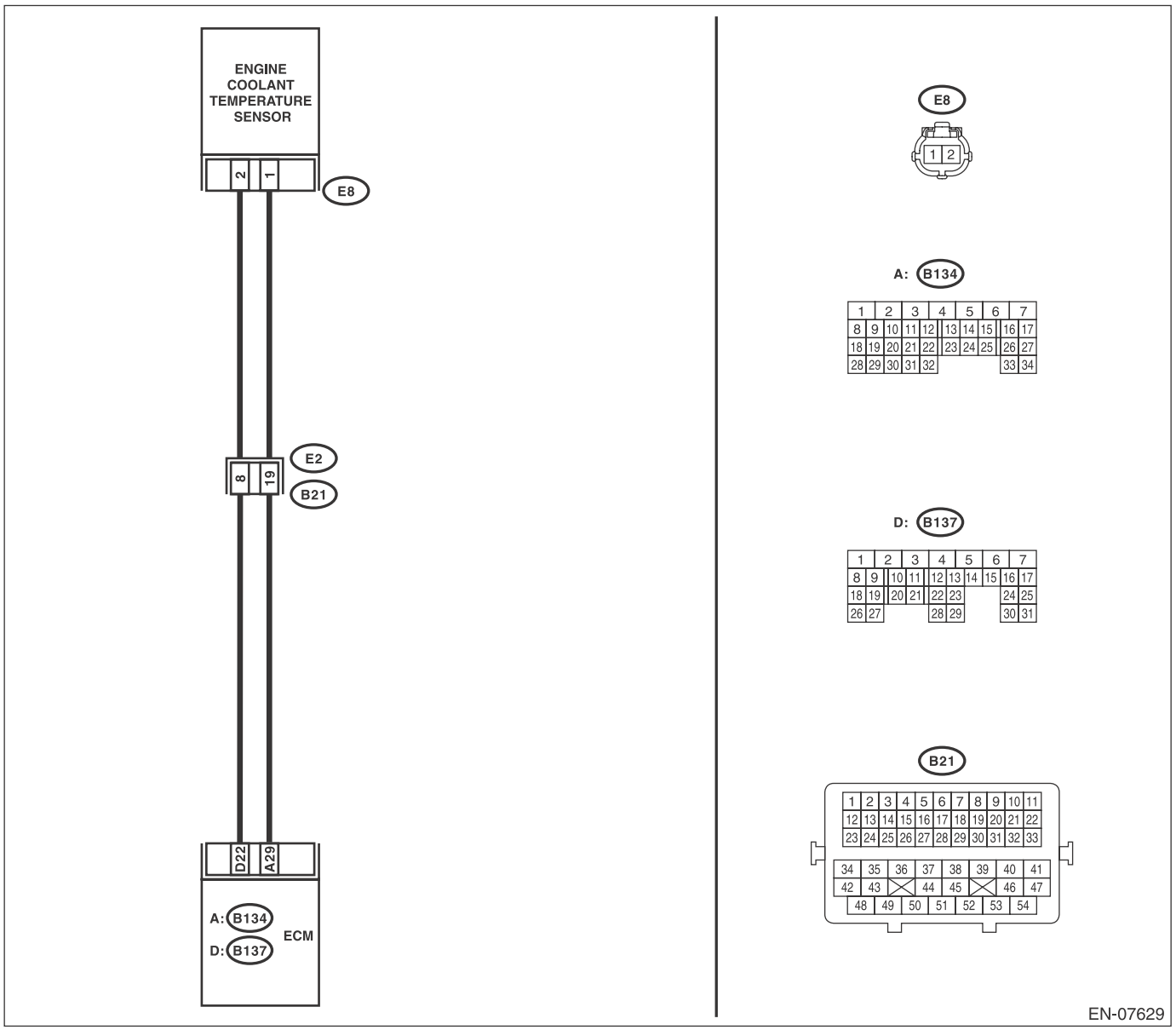

	Step	Check	Yes	No
1	**CHECK CURRENT DATA.** 1) Start the engine. 2) Read the data of engine coolant temperature sensor signal using Subaru Select Monitor or general scan tool. NOTE: • Subaru Select Monitor For detailed operation procedures, refer to "READ CURRENT DATA FOR ENGINE". <Ref. to EN(H4SO)(diag)-34, Subaru Select Monitor.> • General scan tool For detailed operation procedures, refer to the general scan tool operation manual.	Is the temperature 150°C (302°F) or more?	Go to step **2**.	Even if DTC is detected, the circuit has returned to a normal condition at this time. Reproduce the failure, and then perform the diagnosis again. NOTE: In this case, temporary poor contact of connector, temporary open or short circuit of harness may be the cause.
2	**CHECK HARNESS BETWEEN ECM AND ENGINE COOLANT TEMPERATURE SENSOR CONNECTOR.** 1) Turn the ignition switch to OFF. 2) Disconnect the connectors from ECM and engine coolant temperature sensor. 3) Measure the resistance between ECM and chassis ground. ***Connector & terminal*** ***(B137) No. 22 — Chassis ground:***	Is the resistance 1 MΩ or more?	Replace the engine coolant temperature sensor. <Ref. to FU(H4SO)-21, Engine Coolant Temperature Sensor.>	Repair short circuit in harness to ground between ECM and engine coolant temperature sensor connector.

V: DTC P0118 ENGINE COOLANT TEMPERATURE CIRCUIT HIGH

DTC DETECTING CONDITION:

- Immediately at fault recognition
- GENERAL DESCRIPTION <Ref. to GD(H4SO)-36, DTC P0118 ENGINE COOLANT TEMPERATURE CIRCUIT HIGH, Diagnostic Trouble Code (DTC) Detecting Criteria.>

TROUBLE SYMPTOM:

- Hard to start
- Improper idling
- Poor driving performance

CAUTION:
After servicing or replacing faulty parts, perform Clear Memory Mode <Ref. to EN(H4SO)(diag)-54, OPERATION, Clear Memory Mode.>, and Inspection Mode <Ref. to EN(H4SO)(diag)-42, PROCEDURE, Inspection Mode.>.

WIRING DIAGRAM:

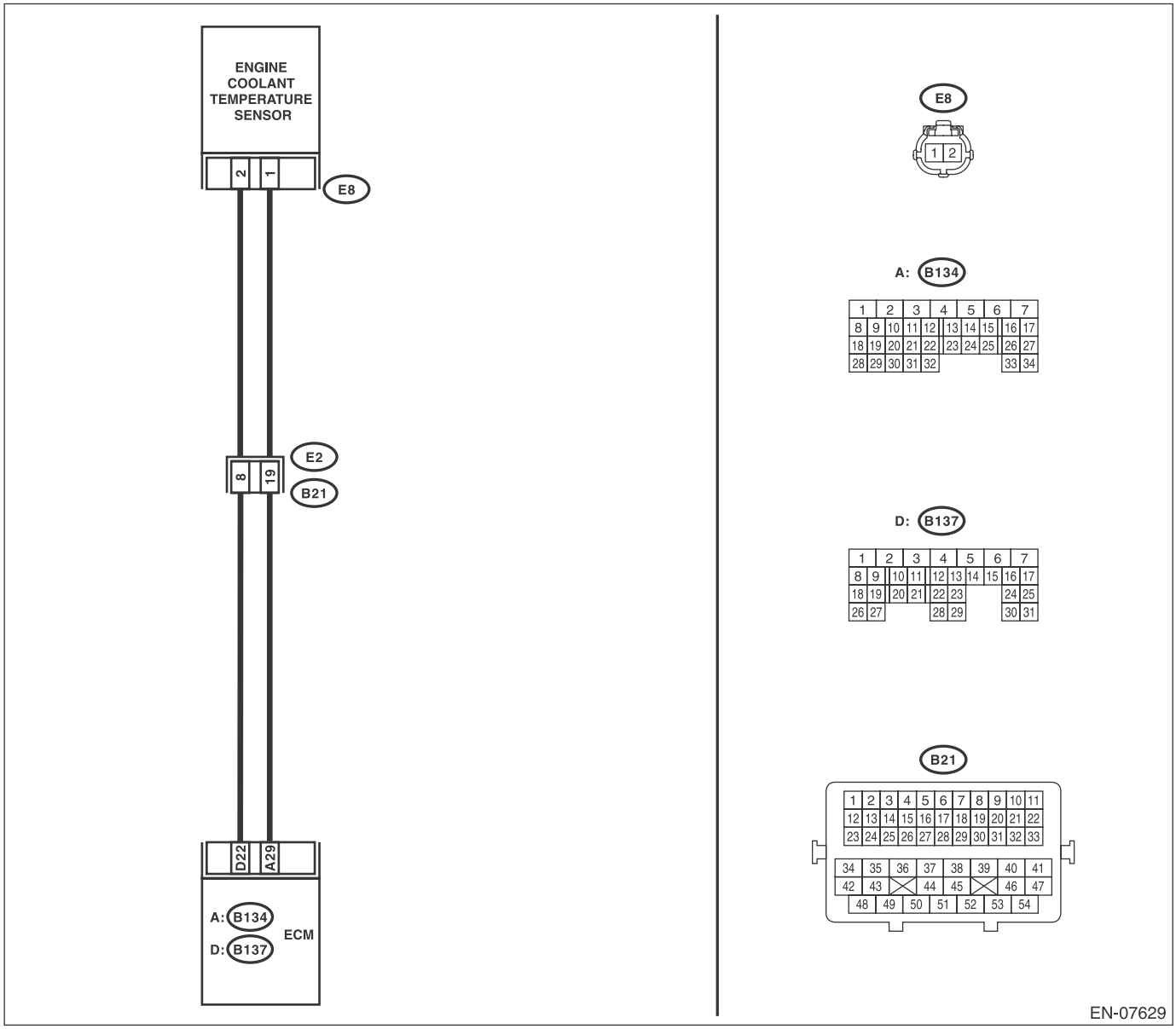

	Step	Check	Yes	No
1	**CHECK CURRENT DATA.** 1) Start the engine. 2) Read the data of engine coolant temperature sensor signal using Subaru Select Monitor or general scan tool. NOTE: • Subaru Select Monitor For detailed operation procedures, refer to "READ CURRENT DATA FOR ENGINE". <Ref. to EN(H4SO)(diag)-34, Subaru Select Monitor.> • General scan tool For detailed operation procedures, refer to the general scan tool operation manual.	Is the engine coolant temperature less than –40°C (–40°F)?	Go to step **2**.	Even if DTC is detected, the circuit has returned to a normal condition at this time. Reproduce the failure, and then perform the diagnosis again. NOTE: In this case, temporary poor contact of connector, temporary open or short circuit of harness may be the cause.
2	**CHECK FOR POOR CONTACT.** Check for poor contact of ECM and engine coolant temperature sensor connector.	Is there poor contact of ECM or engine coolant temperature sensor connector?	Repair the poor contact of ECM or engine coolant temperature sensor connector.	Go to step **3**.
3	**CHECK HARNESS BETWEEN ECM AND ENGINE COOLANT TEMPERATURE SENSOR CONNECTOR.** 1) Turn the ignition switch to OFF. 2) Disconnect the connectors from ECM and engine coolant temperature sensor. 3) Measure the resistance of harness between ECM and engine coolant temperature sensor connector. ***Connector & terminal*** ***(B137) No. 22 — (E8) No. 2:*** ***(B134) No. 29 — (E8) No. 1:***	Is the resistance less than 1 Ω?	Go to step **4**.	Repair the harness and connector. NOTE: In this case, repair the following item: • Open circuit in harness between ECM and engine coolant temperature sensor connector • Poor contact of coupling connector
4	**CHECK HARNESS BETWEEN ECM AND ENGINE COOLANT TEMPERATURE SENSOR CONNECTOR.** 1) Connect all connectors. 2) Turn the ignition switch to ON. 3) Measure the voltage between ECM and chassis ground. ***Connector & terminal*** ***(B137) No. 22 (+) — Chassis ground (–):***	Is the voltage 5 V or more?	Repair the short circuit of harness to power supply between ECM and engine coolant temperature sensor connector.	Replace the engine coolant temperature sensor. <Ref. to FU(H4SO)-21, Engine Coolant Temperature Sensor.>

W: DTC P0122 THROTTLE/PEDAL POSITION SENSOR/SWITCH “A” CIRCUIT LOW

DTC DETECTING CONDITION:

- Immediately at fault recognition
- GENERAL DESCRIPTION <Ref. to GD(H4SO)-37, DTC P0122 THROTTLE/PEDAL POSITION SENSOR/SWITCH “A” CIRCUIT LOW, Diagnostic Trouble Code (DTC) Detecting Criteria.>

TROUBLE SYMPTOM:

- Improper idling
- Engine stalls.
- Poor driving performance

CAUTION:

After servicing or replacing faulty parts, perform Clear Memory Mode <Ref. to EN(H4SO)(diag)-54, OPERATION, Clear Memory Mode.>, and Inspection Mode <Ref. to EN(H4SO)(diag)-42, PROCEDURE, Inspection Mode.>.

WIRING DIAGRAM:

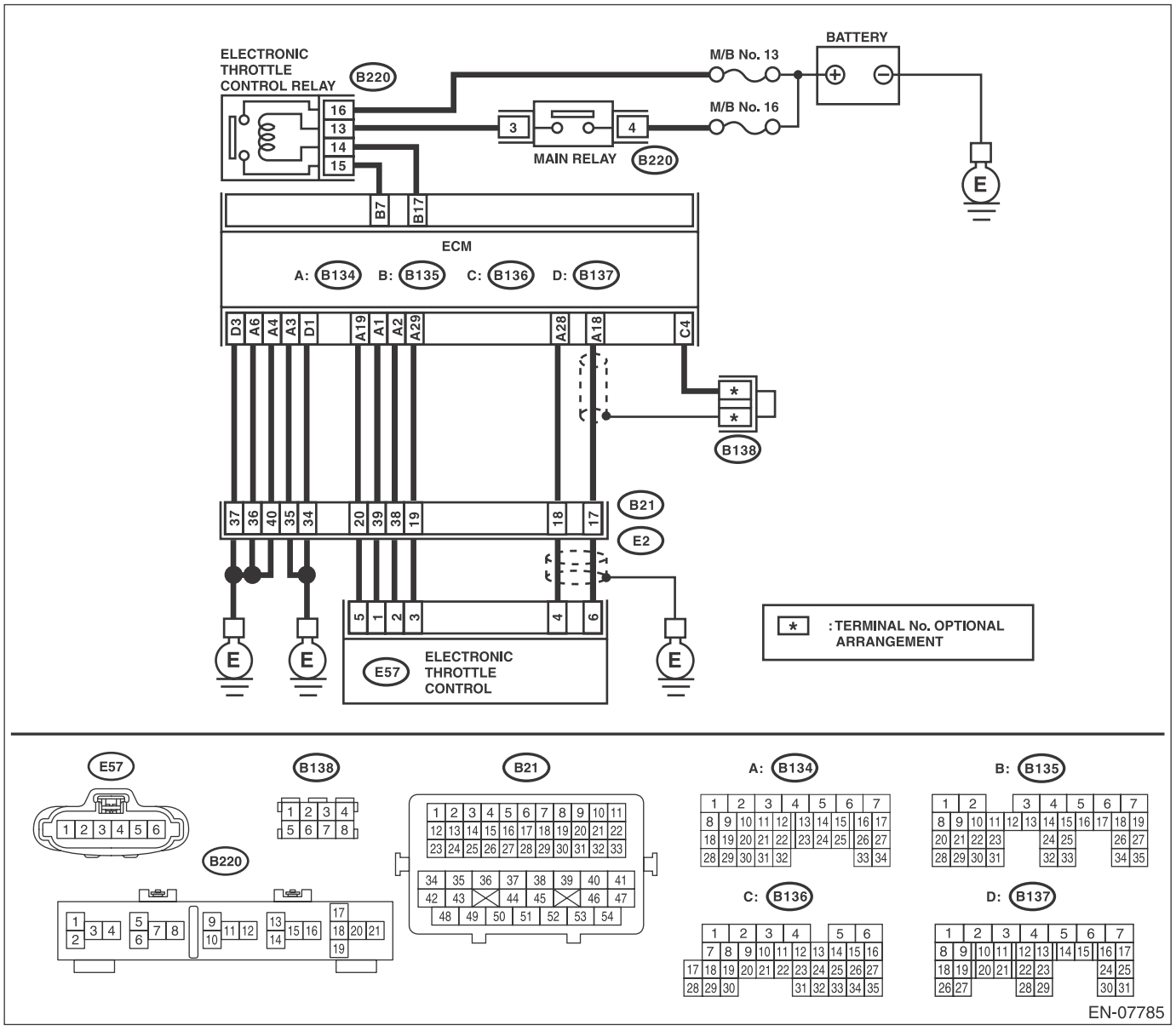

	Step	Check	Yes	No
1	**CHECK HARNESS BETWEEN ECM AND ELECTRONIC THROTTLE CONTROL CONNECTOR.** 1) Turn the ignition switch to OFF. 2) Disconnect the connectors from the ECM and electronic throttle control. 3) Measure the resistance between ECM and chassis ground. ***Connector & terminal*** ***(B134) No. 19 — Chassis ground:*** ***(B134) No. 18 — Chassis ground:*** ***(B134) No. 18 — (B136) No. 4:***	Is the resistance 1 MΩ or more?	Go to step **2**.	Repair the ground short circuit of harness between ECM and electronic throttle control connector.
2	**CHECK SHORT CIRCUIT INSIDE THE ECM.** 1) Connect the connector to ECM. 2) Measure the resistance between electronic throttle control connector and engine ground. ***Connector & terminal*** ***(E57) No. 6 — Engine ground:***	Is the resistance 1 MΩ or more?	Replace the electronic throttle control. <Ref. to FU(H4SO)-14, Throttle Body.>	Repair the ground short circuit of harness between ECM and electronic throttle control connector. Replace the ECM if defective. <Ref. to FU(H4SO)-39, Engine Control Module (ECM).>

X: DTC P0123 THROTTLE/PEDAL POSITION SENSOR/SWITCH “A” CIRCUIT HIGH

DTC DETECTING CONDITION:

- Immediately at fault recognition
- GENERAL DESCRIPTION <Ref. to GD(H4SO)-38, DTC P0123 THROTTLE/PEDAL POSITION SENSOR/SWITCH “A” CIRCUIT HIGH, Diagnostic Trouble Code (DTC) Detecting Criteria.>

TROUBLE SYMPTOM:

- Improper idling
- Engine stalls.
- Poor driving performance

CAUTION:

After servicing or replacing faulty parts, perform Clear Memory Mode <Ref. to EN(H4SO)(diag)-54, OPERATION, Clear Memory Mode.>, and Inspection Mode <Ref. to EN(H4SO)(diag)-42, PROCEDURE, Inspection Mode.>.

WIRING DIAGRAM:

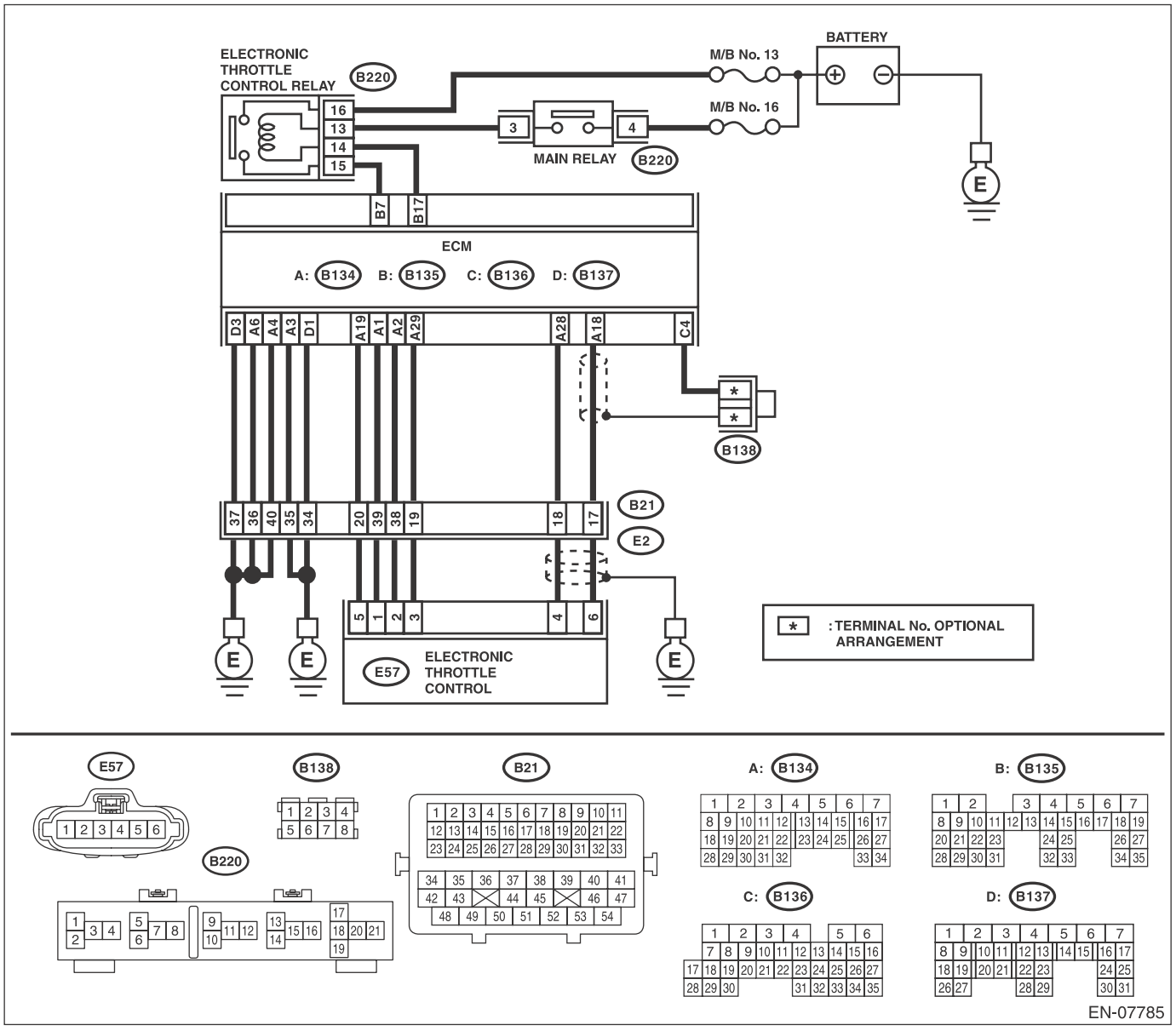

	Step	Check	Yes	No
1	**CHECK HARNESS BETWEEN ECM AND ELECTRONIC THROTTLE CONTROL CONNECTOR.** 1) Turn the ignition switch to OFF. 2) Disconnect the connectors from the ECM and electronic throttle control. 3) Measure the resistance of harness between ECM and electronic throttle control connector. ***Connector & terminal*** ***(B134) No. 18 — (E57) No. 6:*** ***(B134) No. 29 — (E57) No. 3:***	Is the resistance less than 1 Ω?	Go to step **2**.	Repair the harness and connector. NOTE: In this case, repair the following item: • Open circuit in harness between ECM and electronic throttle control connector • Poor contact of coupling connector
2	**CHECK HARNESS BETWEEN ECM AND ELECTRONIC THROTTLE CONTROL CONNECTOR.** 1) Connect the connector to ECM. 2) Measure the resistance between electronic throttle control connector and engine ground. ***Connector & terminal*** ***(E57) No. 3 — Engine ground:***	Is the resistance less than 5 Ω?	Go to step **3**.	Repair the harness and connector. NOTE: In this case, repair the following item: • Open circuit of harness between ECM and engine ground • Poor contact of ECM connector • Poor contact of coupling connector
3	**CHECK HARNESS BETWEEN ECM AND ELECTRONIC THROTTLE CONTROL CONNECTOR.** 1) Turn the ignition switch to ON. 2) Measure the voltage between electronic throttle control connector and engine ground. ***Connector & terminal*** ***(E57) No. 6 (+) — Engine ground (–):***	Is the voltage 5 V or more?	Repair the short circuit of harness to power supply between ECM and electronic throttle control connector.	Go to step **4**.
4	**CHECK HARNESS BETWEEN ECM AND ELECTRONIC THROTTLE CONTROL CONNECTOR.** 1) Turn the ignition switch to OFF. 2) Disconnect the connector from ECM. 3) Measure the resistance between ECM connectors. ***Connector & terminal*** ***(B134) No. 19 — (B134) No. 18:***	Is the resistance 1 MΩ or more?	Repair the poor contact of electronic throttle control connector. Replace the electronic throttle control if defective. <Ref. to FU(H4SO)-14, Throttle Body.>	Repair the short circuit of harness to power supply between ECM and electronic throttle control connector.

Y: DTC P0125 INSUFFICIENT COOLANT TEMPERATURE FOR CLOSED LOOP FUEL CONTROL

DTC DETECTING CONDITION:

- Detected when two consecutive driving cycles with fault occur.
- GENERAL DESCRIPTION <Ref. to GD(H4SO)-39, DTC P0125 INSUFFICIENT COOLANT TEMPERATURE FOR CLOSED LOOP FUEL CONTROL, Diagnostic Trouble Code (DTC) Detecting Criteria.>

TROUBLE SYMPTOM:

Engine does not return to idle.

CAUTION:

After servicing or replacing faulty parts, perform Clear Memory Mode <Ref. to EN(H4SO)(diag)-54, OPERATION, Clear Memory Mode.>, and Inspection Mode <Ref. to EN(H4SO)(diag)-42, PROCEDURE, Inspection Mode.>.

	Step	Check	Yes	No
1	**CHECK TIRE SIZE.**	Is the tire size as specified and the same size as three other wheels?	Go to step **2**.	Replace the tire.
2	**CHECK ENGINE COOLANT.** Check the following items: • Amount of engine coolant • Engine coolant freeze • Contamination of engine coolant	Is the engine coolant normal?	Go to step **3**.	Fill or replace the engine coolant. <Ref. to CO(H4SO)-14, REPLACEMENT, Engine Coolant.>
3	**CHECK THERMOSTAT.**	Does the thermostat remain opened?	Replace the thermostat. <Ref. to CO(H4SO)-18, Thermostat.>	Replace the engine coolant temperature sensor. <Ref. to FU(H4SO)-21, Engine Coolant Temperature Sensor.>

Z: DTC P0126 INSUFFICIENT ENGINE COOLANT TEMPERATURE FOR STABLE OPERATION

DTC DETECTING CONDITION:

- Detected when two consecutive driving cycles with fault occur.
- GENERAL DESCRIPTION <Ref. to GD(H4SO)-41, DTC P0126 INSUFFICIENT ENGINE COOLANT TEMPERATURE FOR STABLE OPERATION, Diagnostic Trouble Code (DTC) Detecting Criteria.>

TROUBLE SYMPTOM:

- Hard to start
- Improper idling
- Poor driving performance

CAUTION:
After servicing or replacing faulty parts, perform Clear Memory Mode <Ref. to EN(H4SO)(diag)-54, OPERATION, Clear Memory Mode.>, and Inspection Mode <Ref. to EN(H4SO)(diag)-42, PROCEDURE, Inspection Mode.>.

WIRING DIAGRAM:

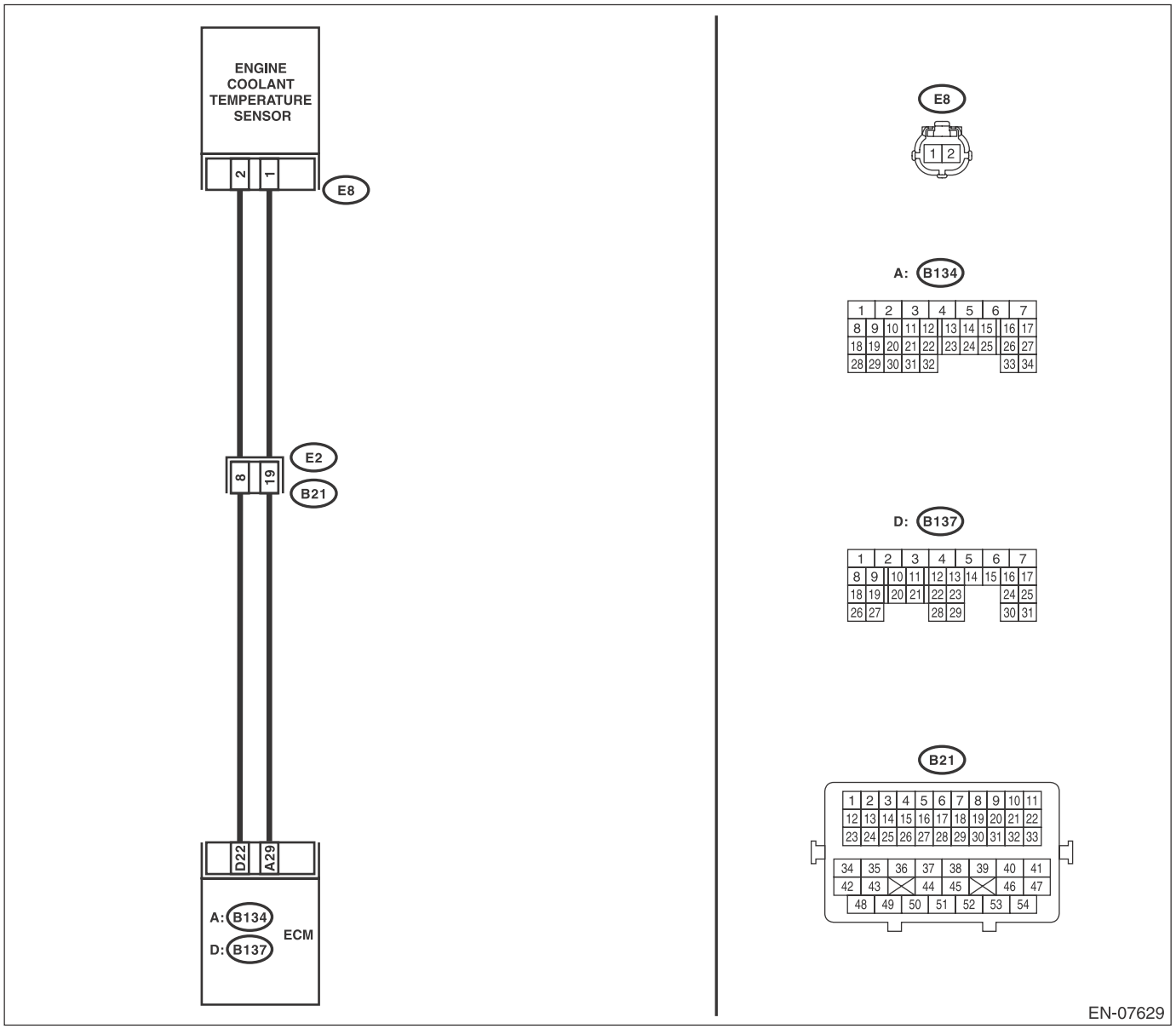

	Step	Check	Yes	No
1	**CHECK ENGINE COOLANT TEMPERATURE SENSOR.** Measure the resistance between engine coolant temperature sensor terminals when the engine coolant is cold and after warmed up. ***Terminals*** ***No. 1 — No. 2:***	Is the resistance of engine coolant temperature sensor different between when engine coolant is cold and after warmed up?	Repair the poor contact of ECM connector.	Replace the engine coolant temperature sensor. <Ref. to FU(H4SO)-21, Engine Coolant Temperature Sensor.>

AA:DTC P0128 COOLANT THERMOSTAT (ENGINE COOLANT TEMPERATURE BELOW THERMOSTAT REGULATING TEMPERATURE)

DTC DETECTING CONDITION:

- Detected when two consecutive driving cycles with fault occur.
- GENERAL DESCRIPTION <Ref. to GD(H4SO)-43, DTC P0128 COOLANT THERMOSTAT (ENGINE COOLANT TEMPERATURE BELOW THERMOSTAT REGULATING TEMPERATURE), Diagnostic Trouble Code (DTC) Detecting Criteria.>

TROUBLE SYMPTOM:

Thermostat remains open.

CAUTION:

After servicing or replacing faulty parts, perform Clear Memory Mode <Ref. to EN(H4SO)(diag)-54, OPERATION, Clear Memory Mode.>, and Inspection Mode <Ref. to EN(H4SO)(diag)-42, PROCEDURE, Inspection Mode.>.

	Step	Check	Yes	No
1	**CHECK ENGINE COOLANT.**	Is the engine coolant amount normal?	Go to step **2**.	Refill the engine coolant. <Ref. to CO(H4SO)-14, Engine Coolant.>
2	**CHECK RADIATOR FAN.** 1) Start the engine. 2) Check the radiator fan operation.	Does the radiator fan continuously rotate for 3 minutes or more during idling?	Repair radiator fan circuit. <Ref. to CO(H4SO)-24, Radiator Main Fan and Fan Motor.> and <Ref. to CO(H4SO)-25, Radiator Sub Fan and Fan Motor.>	Replace the thermostat. <Ref. to CO(H4SO)-18, Thermostat.>

AB:DTC P0131 O2 SENSOR CIRCUIT LOW VOLTAGE (BANK 1 SENSOR 1)

DTC DETECTING CONDITION:

- Immediately at fault recognition
- GENERAL DESCRIPTION <Ref. to GD(H4SO)-45, DTC P0131 O2 SENSOR CIRCUIT LOW VOLTAGE (BANK 1 SENSOR 1), Diagnostic Trouble Code (DTC) Detecting Criteria.>

CAUTION:
After servicing or replacing faulty parts, perform Clear Memory Mode <Ref. to EN(H4SO)(diag)-54, OPERATION, Clear Memory Mode.>, and Inspection Mode <Ref. to EN(H4SO)(diag)-42, PROCEDURE, Inspection Mode.>.

WIRING DIAGRAM:

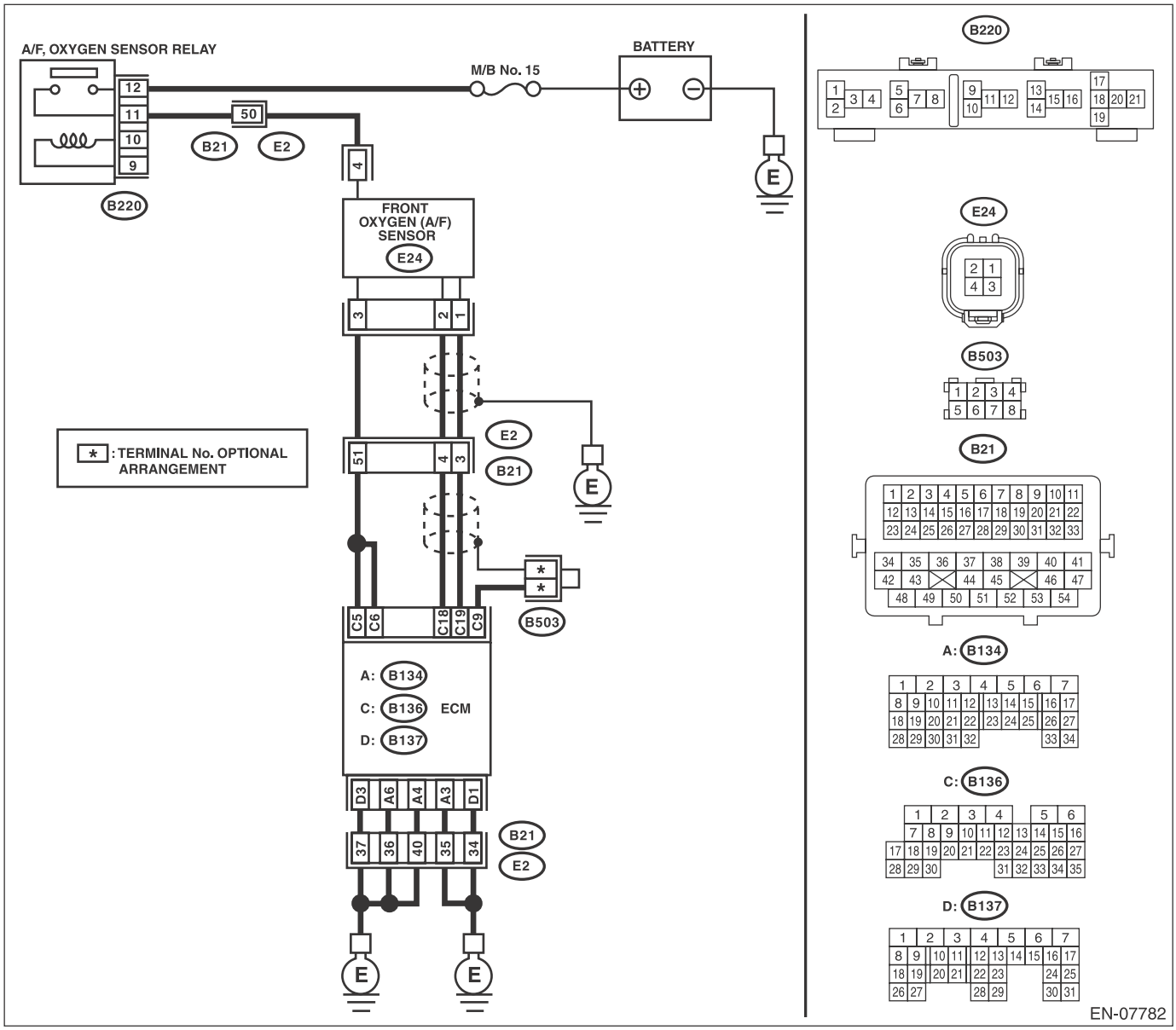

Step		Check	Yes	No
1	**CHECK FRONT OXYGEN (A/F) SENSOR CONNECTOR AND COUPLING CONNECTOR.**	Has water entered the connector?	Completely remove any water inside.	Go to step **2**.

	Step	Check	Yes	No
2	**CHECK HARNESS BETWEEN ECM AND FRONT OXYGEN (A/F) SENSOR CONNECTOR.** 1) Turn the ignition switch to OFF. 2) Disconnect the connector from ECM and front oxygen (A/F) sensor connector. 3) Measure the resistance between ECM and chassis ground. ***Connector & terminal*** ***(B136) No. 18 — Chassis ground:*** ***(B136) No. 19 — Chassis ground:***	Is the resistance 1 MΩ or more?	Go to step **3**.	Repair the ground short circuit of harness between ECM and front oxygen (A/F) sensor connector.
3	**CHECK FOR POOR CONTACT.** Check for poor contact of the front oxygen (A/F) sensor connector.	Is there poor contact of front oxygen (A/F) sensor connector?	Repair the poor contact of front oxygen (A/F) sensor connector.	Replace the front oxygen (A/F) sensor. <Ref. to FU(H4SO)-35, Front Oxygen (A/F) Sensor.>

AC:DTC P0132 O2 SENSOR CIRCUIT HIGH VOLTAGE (BANK 1 SENSOR 1)

DTC DETECTING CONDITION:

- Immediately at fault recognition
- GENERAL DESCRIPTION <Ref. to GD(H4SO)-47, DTC P0132 O2 SENSOR CIRCUIT HIGH VOLTAGE (BANK 1 SENSOR 1), Diagnostic Trouble Code (DTC) Detecting Criteria.>

CAUTION:
After servicing or replacing faulty parts, perform Clear Memory Mode <Ref. to EN(H4SO)(diag)-54, OPERATION, Clear Memory Mode.>, and Inspection Mode <Ref. to EN(H4SO)(diag)-42, PROCEDURE, Inspection Mode.>.

WIRING DIAGRAM:

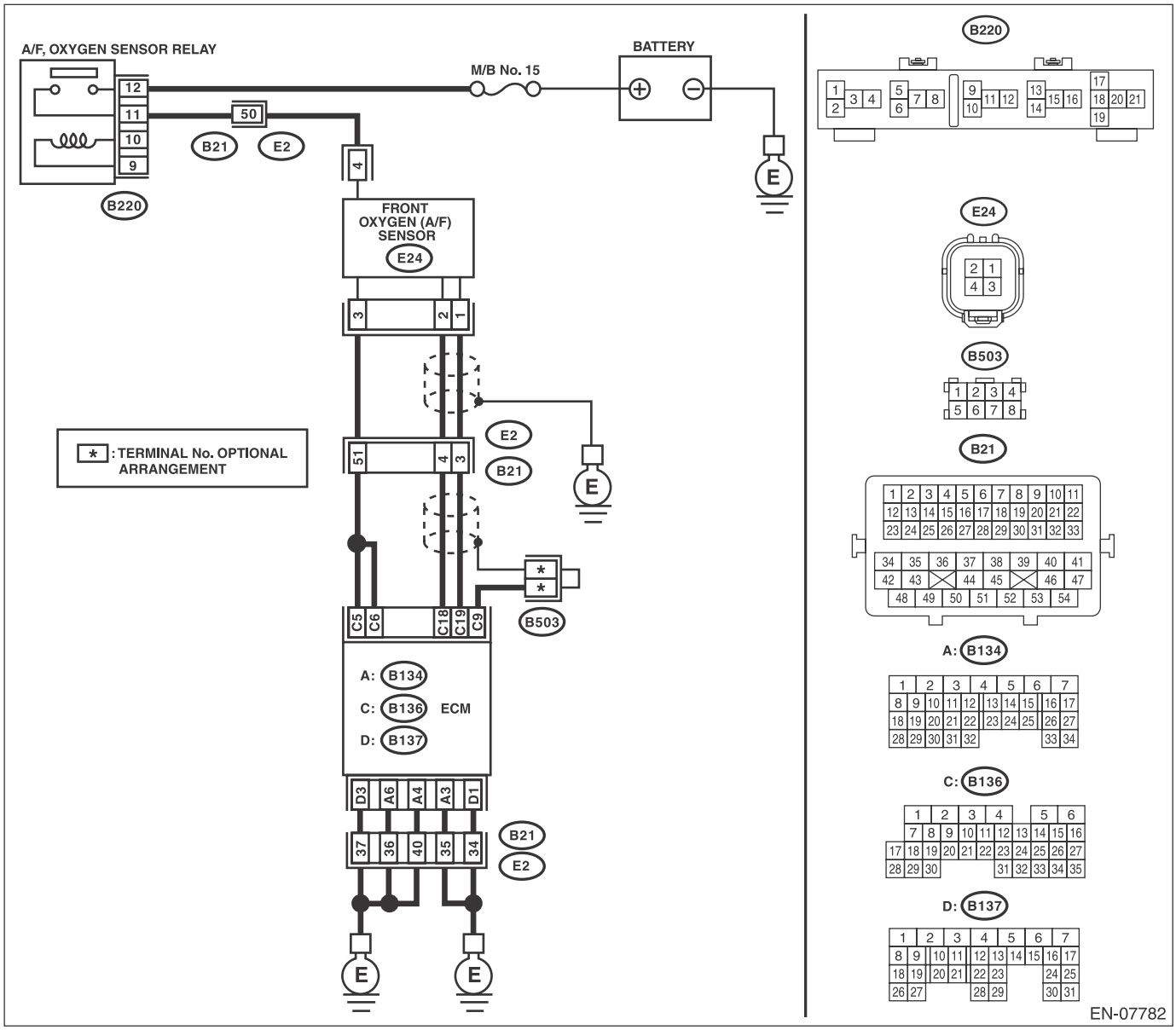

Step		Check	Yes	No
1	**CHECK FRONT OXYGEN (A/F) SENSOR CONNECTOR AND COUPLING CONNECTOR.**	Has water entered the connector?	Completely remove any water inside.	Go to step **2**.

	Step	Check	Yes	No
2	**CHECK HARNESS BETWEEN ECM AND FRONT OXYGEN (A/F) SENSOR CONNECTOR.** 1) Turn the ignition switch to OFF. 2) Disconnect the connector from front oxygen (A/F) sensor. 3) Turn the ignition switch to ON. 4) Measure the voltage between ECM and chassis ground. ***Connector & terminal*** ***(B136) No. 18 (+) — Chassis ground (–):*** ***(B136) No. 19 (+) — Chassis ground (–):***	Is the voltage 8 V or more?	Repair the short circuit of harness to power supply between ECM and front oxygen (A/F) sensor connector.	Replace the front oxygen (A/F) sensor. <Ref. to FU(H4SO)-35, Front Oxygen (A/F) Sensor.>

AD:DTC P0133 O2 SENSOR CIRCUIT SLOW RESPONSE (BANK 1 SENSOR 1)

DTC DETECTING CONDITION:

- Detected when two consecutive driving cycles with fault occur.
- GENERAL DESCRIPTION <Ref. to GD(H4SO)-49, DTC P0133 O2 SENSOR CIRCUIT SLOW RESPONSE (BANK 1 SENSOR 1), Diagnostic Trouble Code (DTC) Detecting Criteria.>

CAUTION:

After servicing or replacing faulty parts, perform Clear Memory Mode <Ref. to EN(H4SO)(diag)-54, OPERATION, Clear Memory Mode.>, and Inspection Mode <Ref. to EN(H4SO)(diag)-42, PROCEDURE, Inspection Mode.>.

WIRING DIAGRAM:

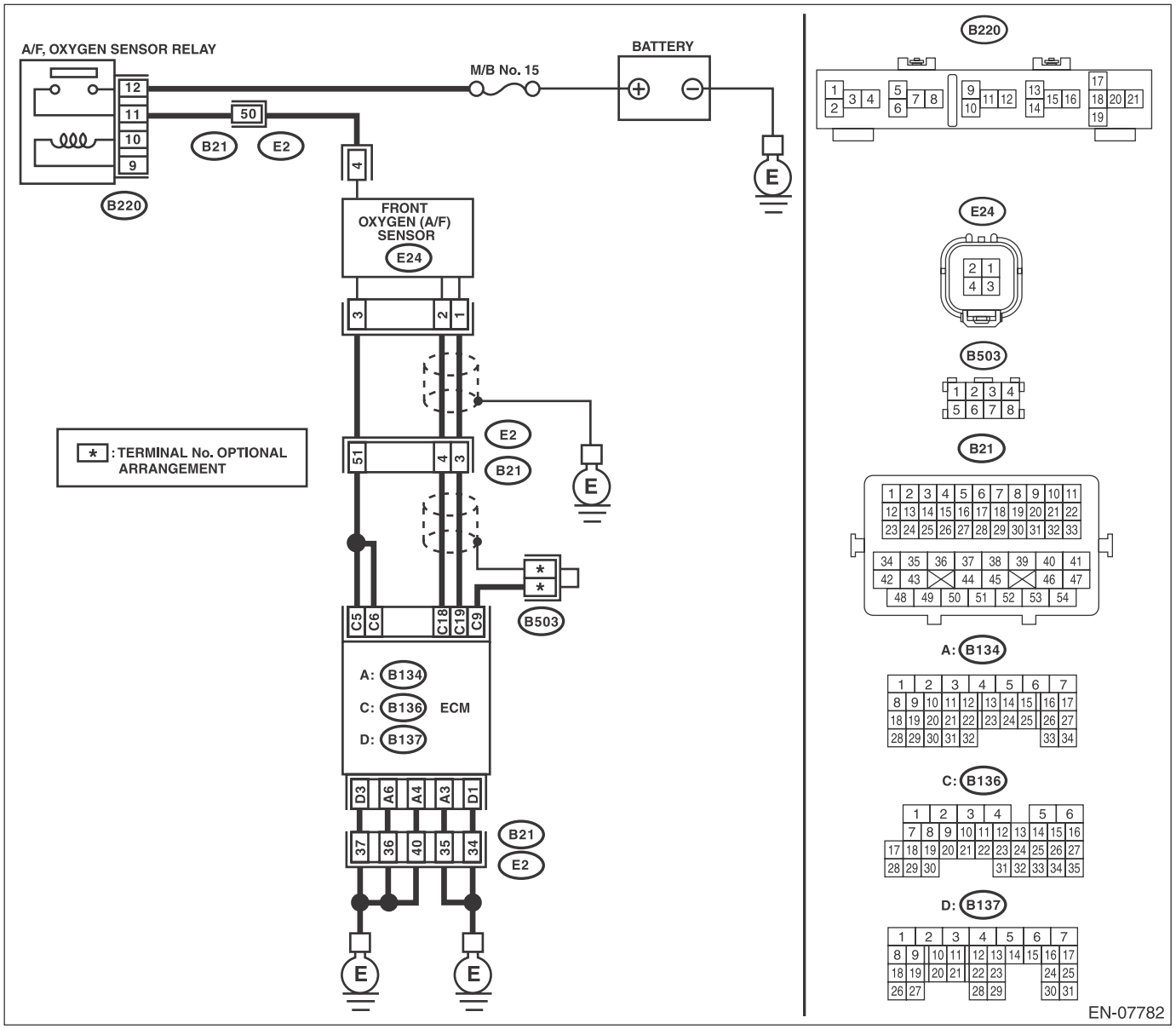

	Step	Check	Yes	No
1	**CHECK EXHAUST SYSTEM.** NOTE: Check the following items. • Loose installation of front portion of exhaust pipe onto cylinder heads • Loose connection between front exhaust pipe and front catalytic converter • Damage of exhaust pipe resulting in a hole	Is there any fault in exhaust system?	Repair the exhaust system.	Replace the front oxygen (A/F) sensor. <Ref. to FU(H4SO)-35, Front Oxygen (A/F) Sensor.>

AE:DTC P0134 O2 SENSOR CIRCUIT NO ACTIVITY DETECTED (BANK 1 SENSOR 1)

DTC DETECTING CONDITION:

- Immediately at fault recognition
- GENERAL DESCRIPTION <Ref. to GD(H4SO)-52, DTC P0134 O2 SENSOR CIRCUIT NO ACTIVITY DETECTED (BANK 1 SENSOR 1), Diagnostic Trouble Code (DTC) Detecting Criteria.>

CAUTION:

After servicing or replacing faulty parts, perform Clear Memory Mode <Ref. to EN(H4SO)(diag)-54, OPERATION, Clear Memory Mode.>, and Inspection Mode <Ref. to EN(H4SO)(diag)-42, PROCEDURE, Inspection Mode.>.

WIRING DIAGRAM:

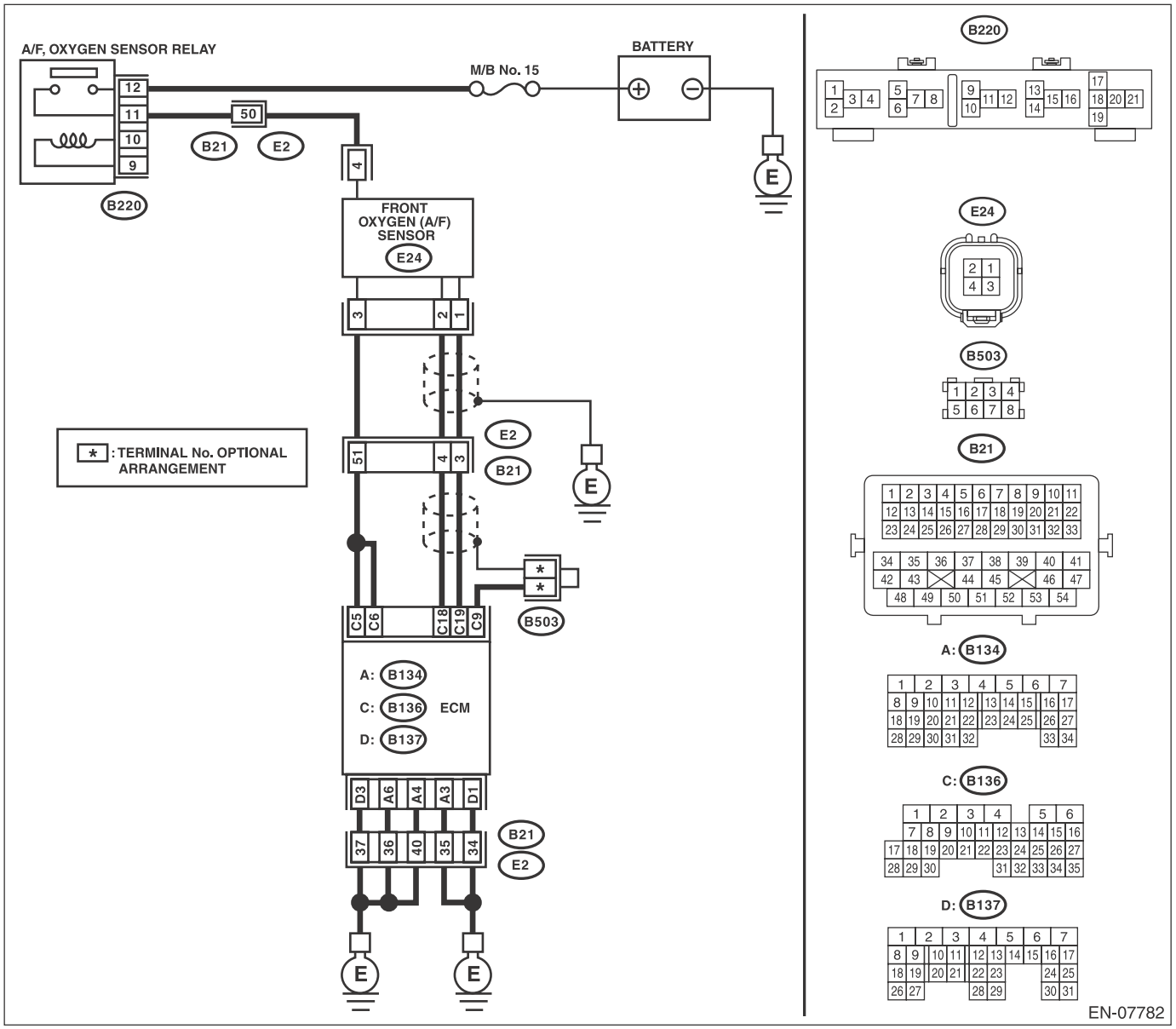

	Step	Check	Yes	No
1	**CHECK HARNESS BETWEEN ECM AND FRONT OXYGEN (A/F) SENSOR CONNECTOR.** 1) Turn the ignition switch to OFF. 2) Disconnect the connector from ECM and front oxygen (A/F) sensor connector. 3) Measure the resistance of harness between ECM and front oxygen (A/F) sensor connector. ***Connector & terminal*** ***(B136) No. 18 — (E24) No. 2:*** ***(B136) No. 19 — (E24) No. 1:***	Is the resistance less than 1 Ω?	Go to step **2**.	Repair the harness and connector. NOTE: In this case, repair the following item: • Open circuit in harness between ECM and front oxygen (A/F) sensor connector • Poor contact of coupling connector
2	**CHECK FOR POOR CONTACT.** Check for poor contact of ECM and front oxygen (A/F) sensor connector.	Is there poor contact of ECM or front oxygen (A/F) sensor connector?	Repair the poor contact of ECM or front oxygen (A/F) sensor connector.	Replace the front oxygen (A/F) sensor. <Ref. to FU(H4SO)-35, Front Oxygen (A/F) Sensor.>

AF:DTC P0137 O2 SENSOR CIRCUIT LOW VOLTAGE (BANK 1 SENSOR 2)

DTC DETECTING CONDITION:

- Detected when two consecutive driving cycles with fault occur.
- GENERAL DESCRIPTION <Ref. to GD(H4SO)-54, DTC P0137 O2 SENSOR CIRCUIT LOW VOLTAGE (BANK 1 SENSOR 2), Diagnostic Trouble Code (DTC) Detecting Criteria.>

CAUTION:

After servicing or replacing faulty parts, perform Clear Memory Mode <Ref. to EN(H4SO)(diag)-54, OPERATION, Clear Memory Mode.>, and Inspection Mode <Ref. to EN(H4SO)(diag)-42, PROCEDURE, Inspection Mode.>.

WIRING DIAGRAM:

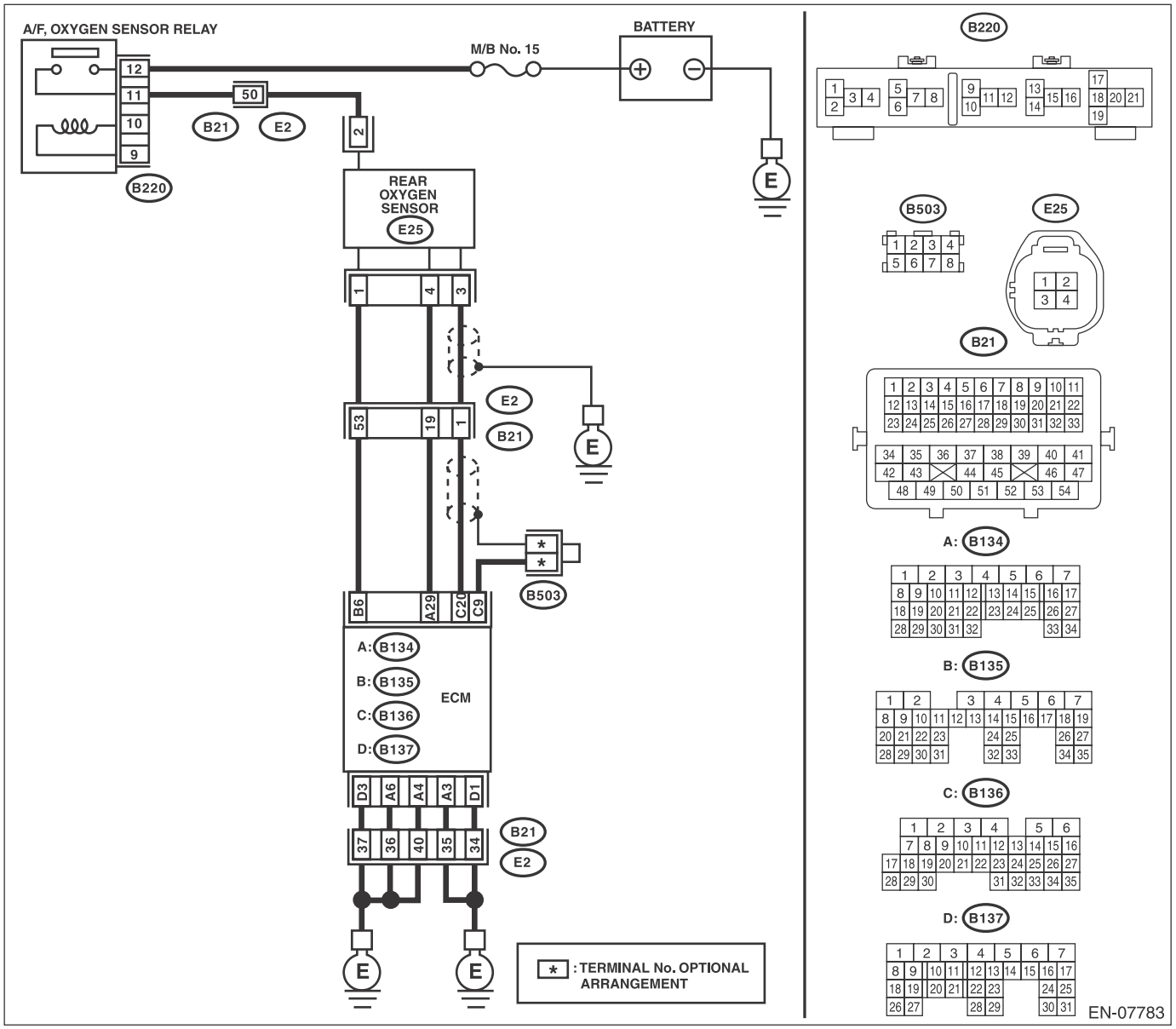

	Step	Check	Yes	No
1	**CHECK REAR OXYGEN SENSOR DATA.** 1) Warm up the engine until engine coolant temperature is above 75°C (167°F), and keep the engine speed at 3,000 rpm. (2 minutes maximum) 2) Read the data of rear oxygen sensor signal using Subaru Select Monitor or general scan tool. NOTE: • Subaru Select Monitor For detailed operation procedures, refer to "READ CURRENT DATA FOR ENGINE". <Ref. to EN(H4SO)(diag)-34, Subaru Select Monitor.> • General scan tool For detailed operation procedures, refer to the general scan tool operation manual.	Is the voltage 490 mV or more?	Go to step **5**.	Go to step **2**.
2	**CHECK REAR OXYGEN SENSOR CONNECTOR AND COUPLING CONNECTOR.**	Has water entered the connector?	Completely remove any water inside.	Go to step **3**.
3	**CHECK HARNESS BETWEEN ECM AND REAR OXYGEN SENSOR CONNECTOR.** 1) Turn the ignition switch to OFF. 2) Disconnect the connector from ECM and rear oxygen sensor. 3) Measure the resistance of harness between ECM and rear oxygen sensor connector. ***Connector & terminal*** ***(B136) No. 20 — (E25) No. 3:*** ***(B134) No. 29 — (E25) No. 4:***	Is the resistance less than 1 Ω?	Go to step **4**.	Repair the harness and connector. NOTE: In this case, repair the following item: • Open circuit in harness between ECM and rear oxygen sensor connector • Poor contact of coupling connector
4	**CHECK HARNESS BETWEEN ECM AND REAR OXYGEN SENSOR CONNECTOR.** 1) Connect the connector to ECM. 2) Turn the ignition switch to ON. 3) Measure the voltage between rear oxygen sensor connector and chassis ground. ***Connector & terminal*** ***(E25) No. 3 (+) — Chassis ground (–):***	Is the voltage 0.2 — 0.5 V?	Replace the rear oxygen sensor. <Ref. to FU(H4SO)-37, Rear Oxygen Sensor.>	Repair the harness and connector. NOTE: In this case, repair the following item: • Open circuit in harness between ECM and rear oxygen sensor connector • Poor contact of rear oxygen sensor connector • Poor contact of ECM connector
5	**CHECK EXHAUST SYSTEM.** Check exhaust system parts. NOTE: Check the following items. • Looseness and improper fitting of exhaust system parts • Damage (crack, hole etc.) of parts • Loose part and improper installation between front oxygen (A/F) sensor and rear oxygen sensor	Is there any fault in exhaust system?	Repair or replace faulty parts.	Replace the rear oxygen sensor. <Ref. to FU(H4SO)-37, Rear Oxygen Sensor.>

AG:DTC P0138 O2 SENSOR CIRCUIT HIGH VOLTAGE (BANK 1 SENSOR 2)

DTC DETECTING CONDITION:

- Detected when two consecutive driving cycles with fault occur.
- GENERAL DESCRIPTION <Ref. to GD(H4SO)-56, DTC P0138 O2 SENSOR CIRCUIT HIGH VOLTAGE (BANK 1 SENSOR 2), Diagnostic Trouble Code (DTC) Detecting Criteria.>

CAUTION:

After servicing or replacing faulty parts, perform Clear Memory Mode <Ref. to EN(H4SO)(diag)-54, OPERATION, Clear Memory Mode.>, and Inspection Mode <Ref. to EN(H4SO)(diag)-42, PROCEDURE, Inspection Mode.>.

WIRING DIAGRAM:

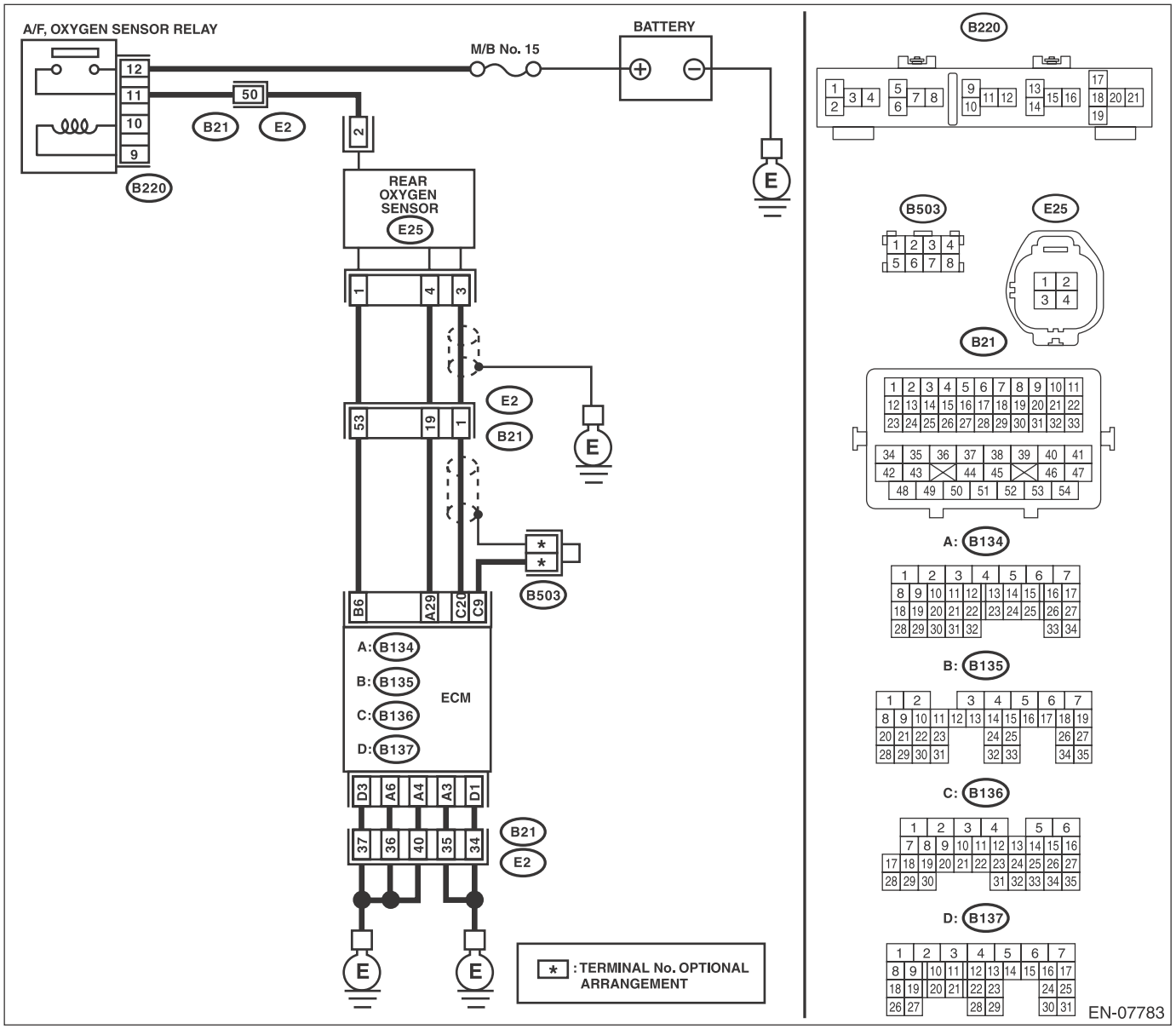

	Step	Check	Yes	No
1	**CHECK REAR OXYGEN SENSOR DATA.** 1) Warm up the engine until engine coolant temperature is above 75°C (167°F), and rapidly reduce the engine speed from 3,000 rpm. 2) Read the data of rear oxygen sensor signal using Subaru Select Monitor or general scan tool. NOTE: • Subaru Select Monitor For detailed operation procedures, refer to "READ CURRENT DATA FOR ENGINE". <Ref. to EN(H4SO)(diag)-34, Subaru Select Monitor.> • General scan tool For detailed operation procedures, refer to the general scan tool operation manual.	Is the voltage 250 mV or less?	Go to step **5**.	Go to step **2**.
2	**CHECK REAR OXYGEN SENSOR CONNECTOR AND COUPLING CONNECTOR.**	Has water entered the connector?	Completely remove any water inside.	Go to step **3**.
3	**CHECK HARNESS BETWEEN ECM AND REAR OXYGEN SENSOR CONNECTOR.** 1) Turn the ignition switch to OFF. 2) Disconnect the connector from ECM and rear oxygen sensor. 3) Measure the resistance of harness between ECM and rear oxygen sensor connector. ***Connector & terminal*** ***(B136) No. 20 — (E25) No. 3:*** ***(B134) No. 29 — (E25) No. 4:***	Is the resistance less than 1 Ω?	Go to step **4**.	Repair the harness and connector. NOTE: In this case, repair the following item: • Open circuit in harness between ECM and rear oxygen sensor connector • Poor contact of coupling connector
4	**CHECK HARNESS BETWEEN ECM AND REAR OXYGEN SENSOR CONNECTOR.** 1) Connect the connector to ECM. 2) Turn the ignition switch to ON. 3) Measure the voltage between rear oxygen sensor connector and chassis ground. ***Connector & terminal*** ***(E25) No. 3 (+) — Chassis ground (–):***	Is the voltage 0.2 — 0.5 V?	Replace the rear oxygen sensor. <Ref. to FU(H4SO)-37, Rear Oxygen Sensor.>	Repair the harness and connector. NOTE: In this case, repair the following item: • Open circuit in harness between ECM and rear oxygen sensor connector • Poor contact of rear oxygen sensor connector • Poor contact of ECM connector
5	**CHECK EXHAUST SYSTEM.** Check exhaust system parts. NOTE: Check the following items. • Looseness and improper fitting of exhaust system parts • Damage (crack, hole etc.) of parts • Loose part and improper installation between front oxygen (A/F) sensor and rear oxygen sensor	Is there any fault in exhaust system?	Repair or replace faulty parts.	Replace the rear oxygen sensor. <Ref. to FU(H4SO)-37, Rear Oxygen Sensor.>

AH:DTC P0139 O2 SENSOR CIRCUIT SLOW RESPONSE (BANK 1 SENSOR 2)

DTC DETECTING CONDITION:

- Detected when two consecutive driving cycles with fault occur.
- GENERAL DESCRIPTION <Ref. to GD(H4SO)-57, DTC P0139 O2 SENSOR CIRCUIT SLOW RESPONSE (BANK 1 SENSOR 2), Diagnostic Trouble Code (DTC) Detecting Criteria.>

CAUTION:

After servicing or replacing faulty parts, perform Clear Memory Mode <Ref. to EN(H4SO)(diag)-54, OPERATION, Clear Memory Mode.>, and Inspection Mode <Ref. to EN(H4SO)(diag)-42, PROCEDURE, Inspection Mode.>.

WIRING DIAGRAM:

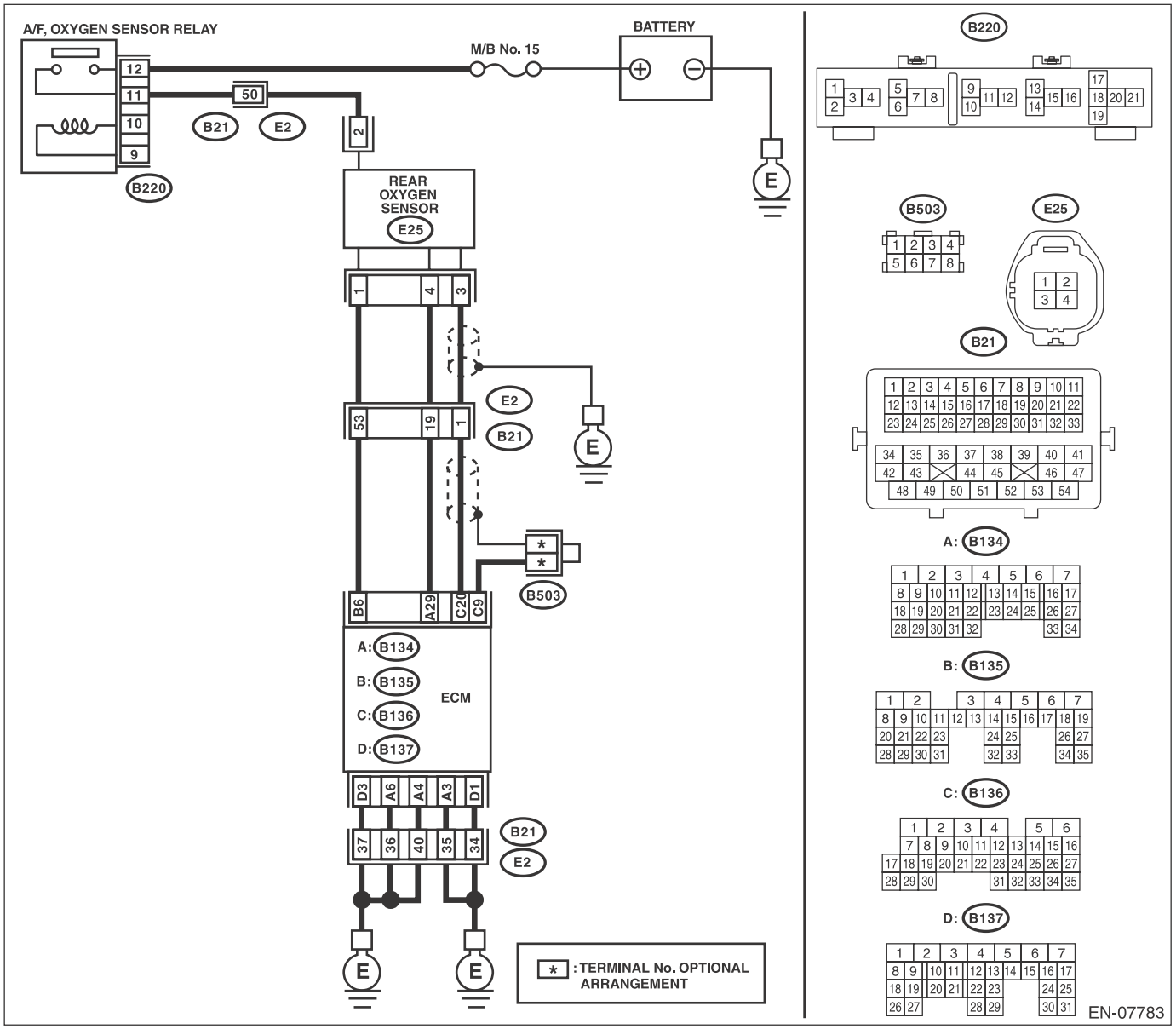

	Step	Check	Yes	No
1	**CHECK HARNESS BETWEEN ECM AND REAR OXYGEN SENSOR CONNECTOR.** 1) Turn the ignition switch to OFF. 2) Disconnect the connector from ECM and rear oxygen sensor. 3) Measure the resistance of harness between ECM and rear oxygen sensor connector. ***Connector & terminal*** ***(B136) No. 20 — (E25) No. 3:***	Is the resistance less than 1 Ω?	Go to step **2**.	Repair the harness and connector. NOTE: In this case, repair the following item: • Open circuit in harness between ECM and rear oxygen sensor connector • Poor contact of coupling connector
2	**CHECK HARNESS BETWEEN ECM AND REAR OXYGEN SENSOR CONNECTOR.** Measure the resistance between rear oxygen sensor connector and chassis ground. ***Connector & terminal*** ***(E25) No. 3 — Chassis ground:***	Is the resistance 1 MΩ or more?	Go to step **3**.	Repair the ground short circuit of harness between ECM and rear oxygen sensor connector.
3	**CHECK REAR OXYGEN SENSOR.** Measure the resistance between rear oxygen sensor terminals. ***Terminals*** ***No. 3 — No. 4***	Is the resistance less than 1 Ω?	Replace the rear oxygen sensor. <Ref. to FU(H4SO)-37, Rear Oxygen Sensor.>	Even if DTC is detected, the circuit has returned to a normal condition at this time. Reproduce the failure, and then perform the diagnosis again. NOTE: In this case, temporary poor contact of connector, temporary open or short circuit of harness may be the cause.

AI: DTC P0140 O2 SENSOR CIRCUIT NO ACTIVITY DETECTED (BANK1 SENSOR2)

DTC DETECTING CONDITION:

- Detected when two consecutive driving cycles with fault occur.
- GENERAL DESCRIPTION <Ref. to GD(H4SO)-65, DTC P0140 O2 SENSOR CIRCUIT NO ACTIVITY DETECTED (BANK1 SENSOR2), Diagnostic Trouble Code (DTC) Detecting Criteria.>

CAUTION:

After servicing or replacing faulty parts, perform Clear Memory Mode <Ref. to EN(H4SO)(diag)-54, OPERATION, Clear Memory Mode.>, and Inspection Mode <Ref. to EN(H4SO)(diag)-42, PROCEDURE, Inspection Mode.>.

WIRING DIAGRAM:

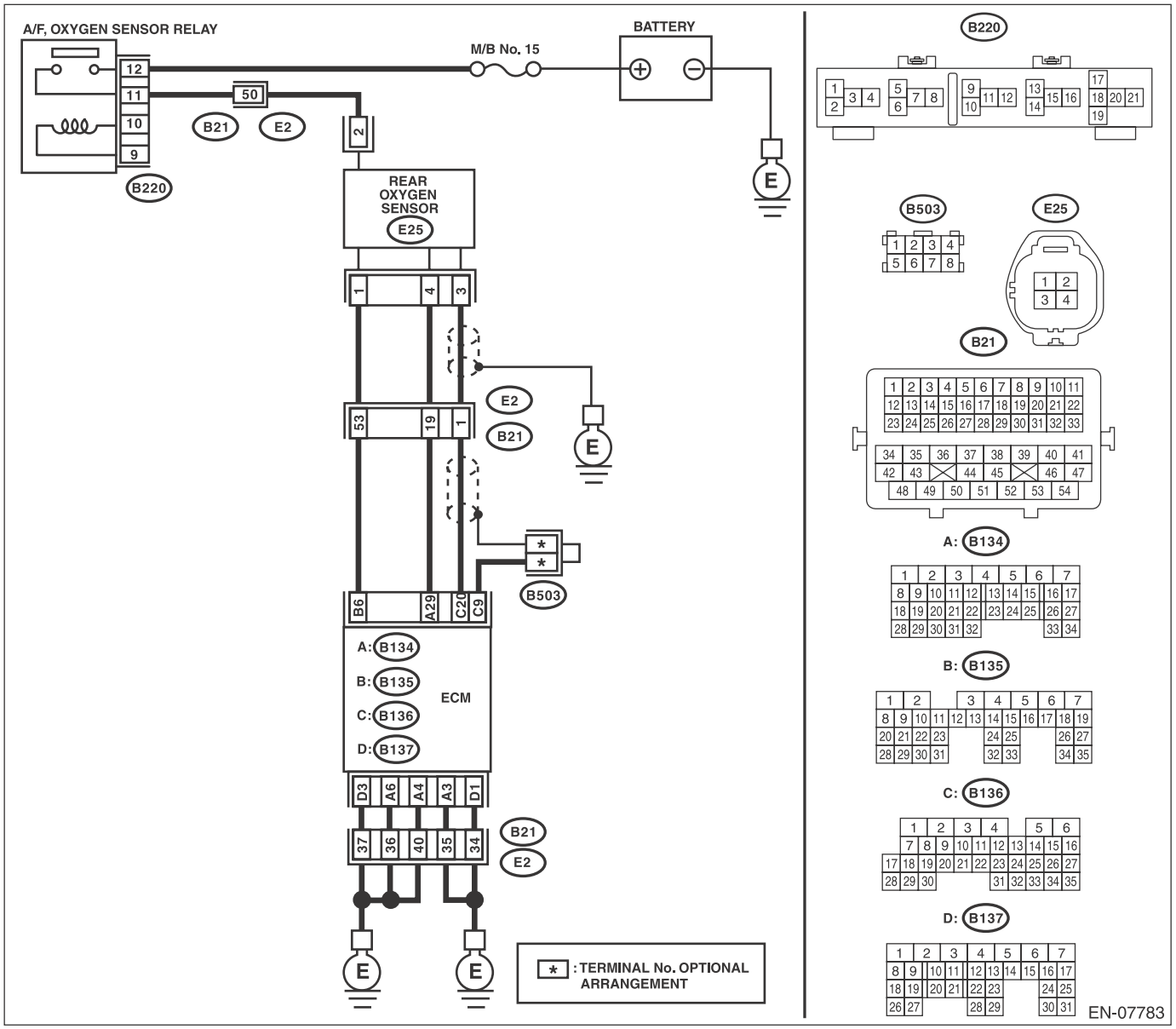

	Step	Check	Yes	No
1	**CHECK REAR OXYGEN SENSOR DATA.** 1) Warm up the engine until engine coolant temperature is above 75°C (167°F), and keep the engine speed at 3,000 rpm. (2 minutes maximum) 2) Read the data of rear oxygen sensor signal using Subaru Select Monitor or general scan tool. NOTE: • Subaru Select Monitor For detailed operation procedures, refer to "READ CURRENT DATA FOR ENGINE". <Ref. to EN(H4SO)(diag)-34, Subaru Select Monitor.> • General scan tool For detailed operation procedures, refer to the general scan tool operation manual.	Is the voltage 490 mV or more?	Go to step **6.**	Go to step **2.**
2	**CHECK REAR OXYGEN SENSOR DATA.** 1) Warm up the engine until engine coolant temperature is above 75°C (167°F), and rapidly reduce the engine speed from 3,000 rpm. 2) Read the data of rear oxygen sensor signal using Subaru Select Monitor or general scan tool. NOTE: • Subaru Select Monitor For detailed operation procedures, refer to "READ CURRENT DATA FOR ENGINE". <Ref. to EN(H4SO)(diag)-34, Subaru Select Monitor.> • General scan tool For detailed operation procedures, refer to the general scan tool operation manual.	Is the voltage 250 mV or less?	Go to step **6.**	Go to step **3.**
3	**CHECK REAR OXYGEN SENSOR CONNECTOR AND COUPLING CONNECTOR.**	Has water entered the connector?	Completely remove any water inside.	Go to step **4.**
4	**CHECK HARNESS BETWEEN ECM AND REAR OXYGEN SENSOR CONNECTOR.** 1) Turn the ignition switch to OFF. 2) Disconnect the connector from ECM and rear oxygen sensor. 3) Measure the resistance of harness between ECM and rear oxygen sensor connector. ***Connector & terminal*** ***(B136) No. 20 — (E25) No. 3:*** ***(B134) No. 29 — (E25) No. 4:***	Is the resistance less than 1 Ω?	Go to step **5.**	Repair the harness and connector. NOTE: In this case, repair the following item: • Open circuit in harness between ECM and rear oxygen sensor connector • Poor contact of coupling connector

	Step	Check	Yes	No
5	**CHECK HARNESS BETWEEN ECM AND REAR OXYGEN SENSOR CONNECTOR.** 1) Connect the connector to ECM. 2) Turn the ignition switch to ON. 3) Measure the voltage between rear oxygen sensor connector and chassis ground. ***Connector & terminal*** ***(E25) No. 3 (+) — Chassis ground (–):***	Is the voltage 0.2 — 0.5 V?	Replace the rear oxygen sensor. <Ref. to FU(H4SO)-37, Rear Oxygen Sensor.>	Repair the harness and connector. NOTE: In this case, repair the following item: • Open circuit in harness between ECM and rear oxygen sensor connector • Poor contact of rear oxygen sensor connector • Poor contact of ECM connector
6	**CHECK EXHAUST SYSTEM.** Check exhaust system parts. NOTE: Check the following items. • Looseness and improper fitting of exhaust system parts • Damage (crack, hole etc.) of parts • Loose part and improper installation between front oxygen (A/F) sensor and rear oxygen sensor	Is there any fault in exhaust system?	Repair or replace faulty parts.	Replace the rear oxygen sensor. <Ref. to FU(H4SO)-37, Rear Oxygen Sensor.>

AJ:DTC P0141 O2 SENSOR HEATER CIRCUIT (BANK1 SENSOR2)

Refer to DTC P0037 for diagnostic procedure. <Ref. to EN(H4SO)(diag)-96, DTC P0037 HO2S HEATER CONTROL CIRCUIT LOW (BANK 1 SENSOR 2), Diagnostic Procedure with Diagnostic Trouble Code (DTC).>

AK:DTC P0171 SYSTEM TOO LEAN (BANK 1)

Refer to DTC P0172 for diagnostic procedure. <Ref. to EN(H4SO)(diag)-155, DTC P0172 SYSTEM TOO RICH (BANK 1), Diagnostic Procedure with Diagnostic Trouble Code (DTC).>

AL:DTC P0172 SYSTEM TOO RICH (BANK 1)

DTC DETECTING CONDITION:

- Detected when two consecutive driving cycles with fault occur.
- GENERAL DESCRIPTION <Ref. to GD(H4SO)-70, DTC P0172 SYSTEM TOO RICH (BANK 1), Diagnostic Trouble Code (DTC) Detecting Criteria.>

TROUBLE SYMPTOM:

- Improper idling
- Engine stalls.
- Poor driving performance

CAUTION:
After servicing or replacing faulty parts, perform Clear Memory Mode <Ref. to EN(H4SO)(diag)-54, OPERATION, Clear Memory Mode.>, and Inspection Mode <Ref. to EN(H4SO)(diag)-42, PROCEDURE, Inspection Mode.>.

	Step	Check	Yes	No
1	**CHECK EXHAUST SYSTEM.**	Are there holes or loose bolts on exhaust system?	Repair the exhaust system.	Go to step **2**.
2	**CHECK AIR INTAKE SYSTEM.**	Are there holes, loose bolts or disconnection of hose on air intake system?	Repair the air intake system.	Go to step **3**.
3	**CHECK FUEL PRESSURE.** **WARNING:** **Place "NO OPEN FLAMES" signs near the working area.** **CAUTION:** **Be careful not to spill fuel.** Measure the fuel pressure. <Ref. to ME(H4SO)-28, INSPECTION, Fuel Pressure.> **CAUTION:** **Release fuel pressure before removing the fuel pressure gauge.**	Is the measured value 339.5 — 360.5 kPa (3.5 — 3.7 kg/cm^2, 49 — 52 psi)?	Go to step **4**.	Repair the following item. Fuel pressure is too high: • Clogged fuel line or bent hose Fuel pressure is too low: • Improper fuel pump discharge • Clogged fuel line
4	**CHECK ENGINE COOLANT TEMPERATURE SENSOR.** 1) Start the engine and warm up completely. 2) Read the data of engine coolant temperature sensor signal using Subaru Select Monitor or general scan tool. NOTE: • Subaru Select Monitor For detailed operation procedures, refer to "READ CURRENT DATA FOR ENGINE". <Ref. to EN(H4SO)(diag)-34, Subaru Select Monitor.> • General scan tool For detailed operation procedures, refer to the general scan tool operation manual.	Is the temperature 75°C (167°F) or more?	Go to step **5**.	Replace the engine coolant temperature sensor. <Ref. to FU(H4SO)-21, Engine Coolant Temperature Sensor.>

	Step	Check	Yes	No
5	**CHECK MASS AIR FLOW AND INTAKE AIR TEMPERATURE SENSOR.** 1) Start the engine and warm up engine until coolant temperature is higher than 75°C (167°F). 2) For CVT models, set the select lever to "P" range or "N" range, and for MT models, place the shift lever in the neutral position. 3) Turn the A/C switch to OFF. 4) Turn all the accessory switches to OFF. 5) Read the data of mass air flow and intake air temperature sensor signal using Subaru Select Monitor or general scan tool. NOTE: • Subaru Select Monitor For detailed operation procedures, refer to "READ CURRENT DATA FOR ENGINE". <Ref. to EN(H4SO)(diag)-34, Subaru Select Monitor.> • General scan tool For detailed operation procedures, refer to the general scan tool operation manual.	Is the measured value 2.0 — 5.0 g/s (0.26 — 0.66 lb/m)?	Go to step **6**.	Replace the mass air flow and intake air temperature sensor. <Ref. to FU(H4SO)-29, Mass Air Flow and Intake Air Temperature Sensor.>
6	**CHECK MASS AIR FLOW AND INTAKE AIR TEMPERATURE SENSOR.** 1) Start the engine and warm up engine until coolant temperature is higher than 70°C (158°F). 2) For CVT models, set the select lever to "P" range or "N" range, and for MT models, place the shift lever in the neutral position. 3) Turn the A/C switch to OFF. 4) Turn all the accessory switches to OFF. 5) Open the front hood. 6) Measure the ambient temperature. 7) Read the data of mass air flow and intake air temperature sensor signal using Subaru Select Monitor or general scan tool. NOTE: • Subaru Select Monitor For detailed operation procedures, refer to "READ CURRENT DATA FOR ENGINE". <Ref. to EN(H4SO)(diag)-34, Subaru Select Monitor.> • General scan tool For detailed operation procedures, refer to the general scan tool operation manual.	Subtract ambient temperature from intake air temperature. Is the obtained value –10 — 50°C (–18 — 90°F)?	Repair the poor contact of ECM connector.	Check the mass air flow and intake air temperature sensor. <Ref. to FU(H4SO)-29, Mass Air Flow and Intake Air Temperature Sensor.>

AM:DTC P0181 FUEL TEMPERATURE SENSOR “A” CIRCUIT RANGE/PERFORMANCE

DTC DETECTING CONDITION:

- Detected when two consecutive driving cycles with fault occur.
- GENERAL DESCRIPTION <Ref. to GD(H4SO)-71, DTC P0181 FUEL TEMPERATURE SENSOR “A” CIRCUIT RANGE/PERFORMANCE, Diagnostic Trouble Code (DTC) Detecting Criteria.>

CAUTION:

After servicing or replacing faulty parts, perform Clear Memory Mode <Ref. to EN(H4SO)(diag)-54, OPERATION, Clear Memory Mode.>, and Inspection Mode <Ref. to EN(H4SO)(diag)-42, PROCEDURE, Inspection Mode.>.

WIRING DIAGRAM:

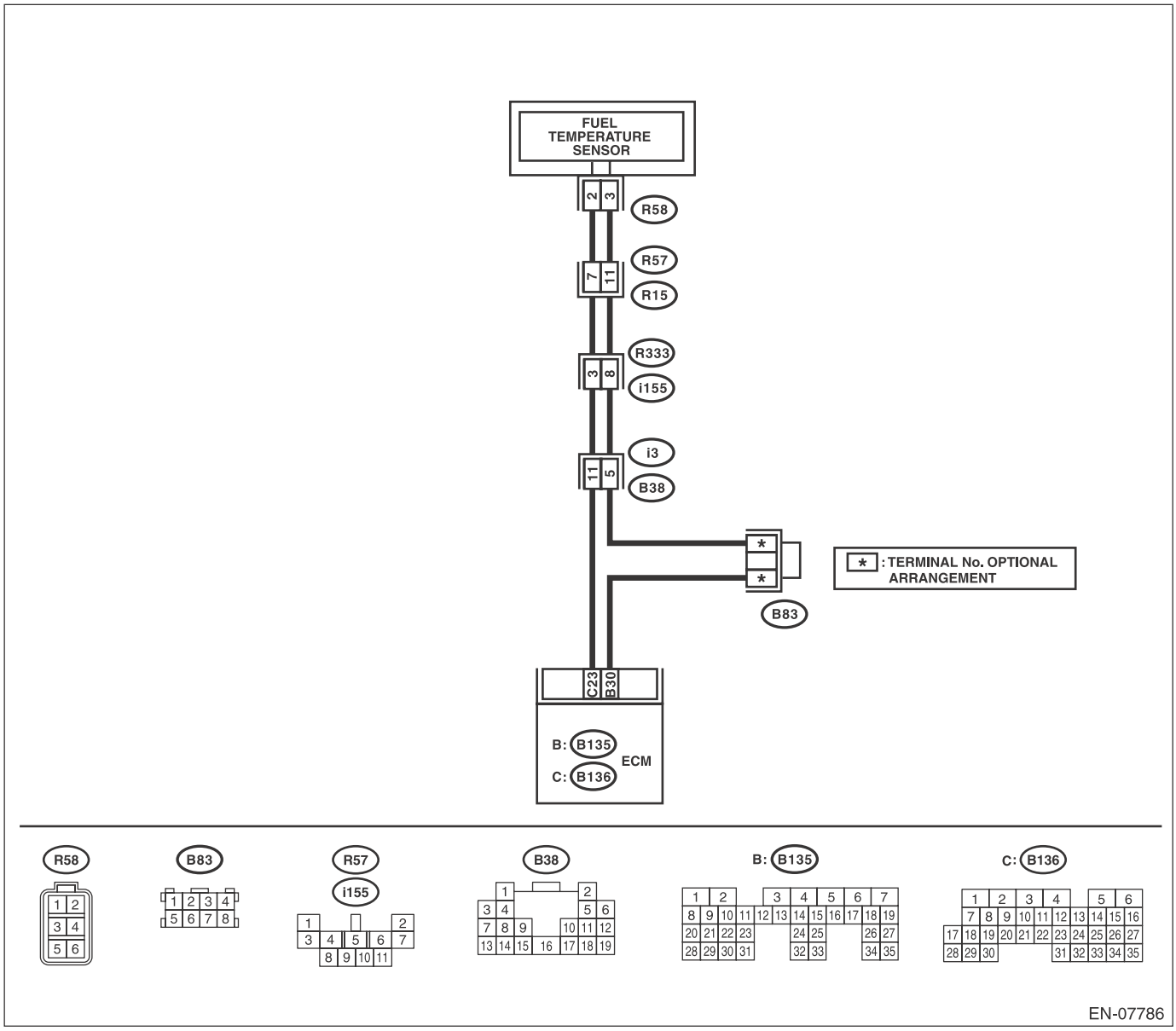

Step		Check	Yes	No
1	**CHECK FOR ANY OTHER DTC ON DISPLAY.**	Is any other DTC displayed?	Check the appropriate DTC using the “List of Diagnostic Trouble Code (DTC)”. <Ref. to EN(H4SO)(diag)-79, List of Diagnostic Trouble Code (DTC).>	Replace the fuel temperature sensor. <Ref. to EC(H4SO)-13, Fuel Temperature Sensor.>

AN:DTC P0182 FUEL TEMPERATURE SENSOR “A” CIRCUIT LOW INPUT

DTC DETECTING CONDITION:

- Immediately at fault recognition
- GENERAL DESCRIPTION <Ref. to GD(H4SO)-74, DTC P0182 FUEL TEMPERATURE SENSOR “A” CIRCUIT LOW INPUT, Diagnostic Trouble Code (DTC) Detecting Criteria.>

CAUTION:

After servicing or replacing faulty parts, perform Clear Memory Mode <Ref. to EN(H4SO)(diag)-54, OPERATION, Clear Memory Mode.>, and Inspection Mode <Ref. to EN(H4SO)(diag)-42, PROCEDURE, Inspection Mode.>.

WIRING DIAGRAM:

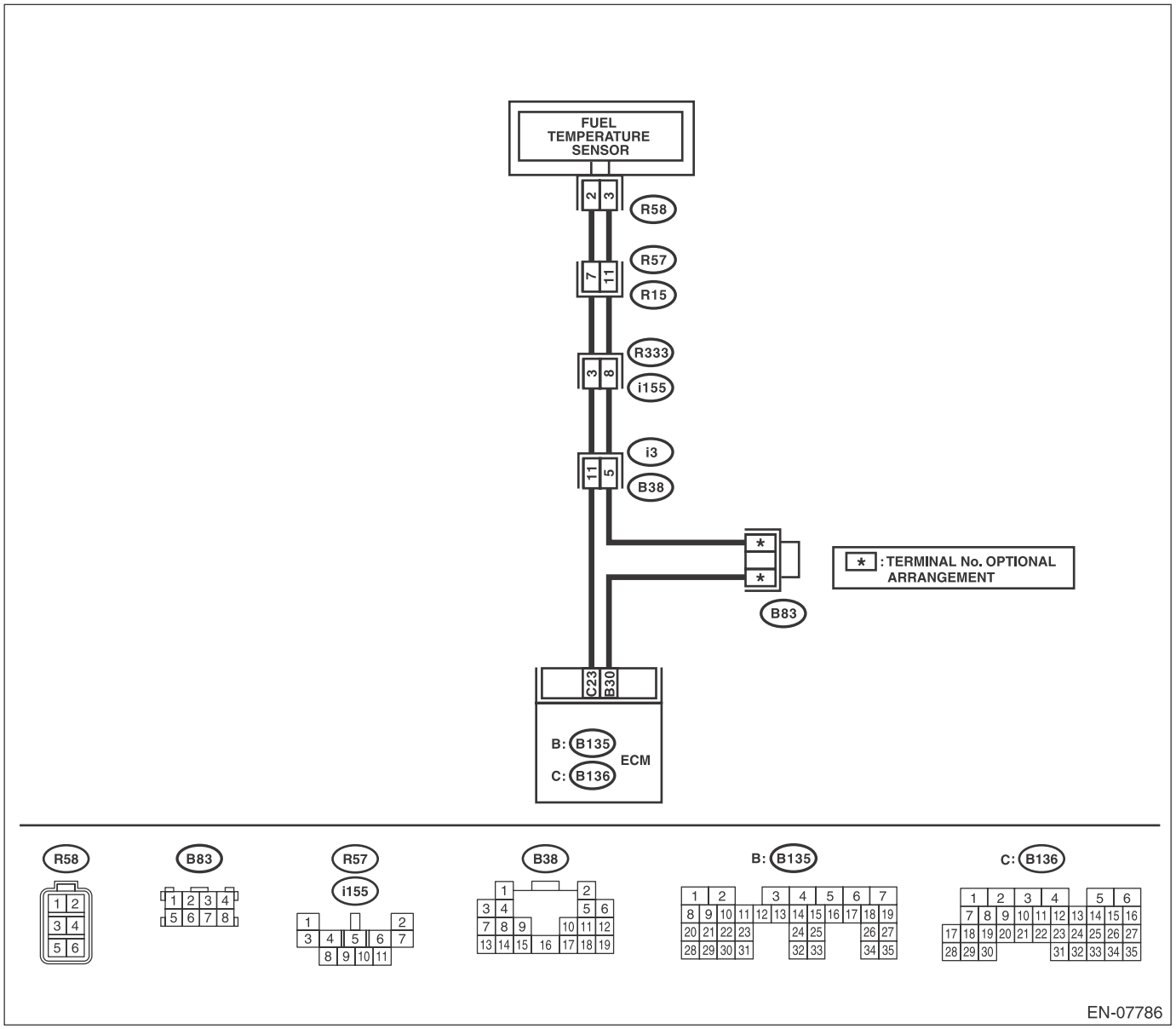

	Step	Check	Yes	No
1	**CHECK CURRENT DATA.** 1) Start the engine. 2) Read the data of fuel temperature sensor signal using Subaru Select Monitor. NOTE: For detailed operation procedures, refer to "READ CURRENT DATA FOR ENGINE". <Ref. to EN(H4SO)(diag)-34, Subaru Select Monitor.>	Is the temperature 120°C (248°F) or higher?	Go to step **2**.	Even if DTC is detected, the circuit has returned to a normal condition at this time. Reproduce the failure, and then perform the diagnosis again. NOTE: In this case, temporary poor contact of connector, temporary open or short circuit of harness may be the cause.
2	**CHECK HARNESS BETWEEN ECM AND FUEL TEMPERATURE SENSOR CONNECTOR.** 1) Turn the ignition switch to OFF. 2) Disconnect the connector from ECM and fuel temperature sensor. 3) Measure the resistance between ECM and chassis ground. ***Connector & terminal*** ***(B136) No. 23 — Chassis ground:***	Is the resistance 1 MΩ or more?	Replace the fuel temperature sensor. <Ref. to EC(H4SO)-13, Fuel Temperature Sensor.>	Repair the ground short circuit of harness between ECM and fuel pump.

AO:DTC P0183 FUEL TEMPERATURE SENSOR “A” CIRCUIT HIGH INPUT

DTC DETECTING CONDITION:

- Immediately at fault recognition
- GENERAL DESCRIPTION <Ref. to GD(H4SO)-75, DTC P0183 FUEL TEMPERATURE SENSOR “A” CIRCUIT HIGH INPUT, Diagnostic Trouble Code (DTC) Detecting Criteria.>

CAUTION:

After servicing or replacing faulty parts, perform Clear Memory Mode <Ref. to EN(H4SO)(diag)-54, OPERATION, Clear Memory Mode.>, and Inspection Mode <Ref. to EN(H4SO)(diag)-42, PROCEDURE, Inspection Mode.>.

WIRING DIAGRAM:

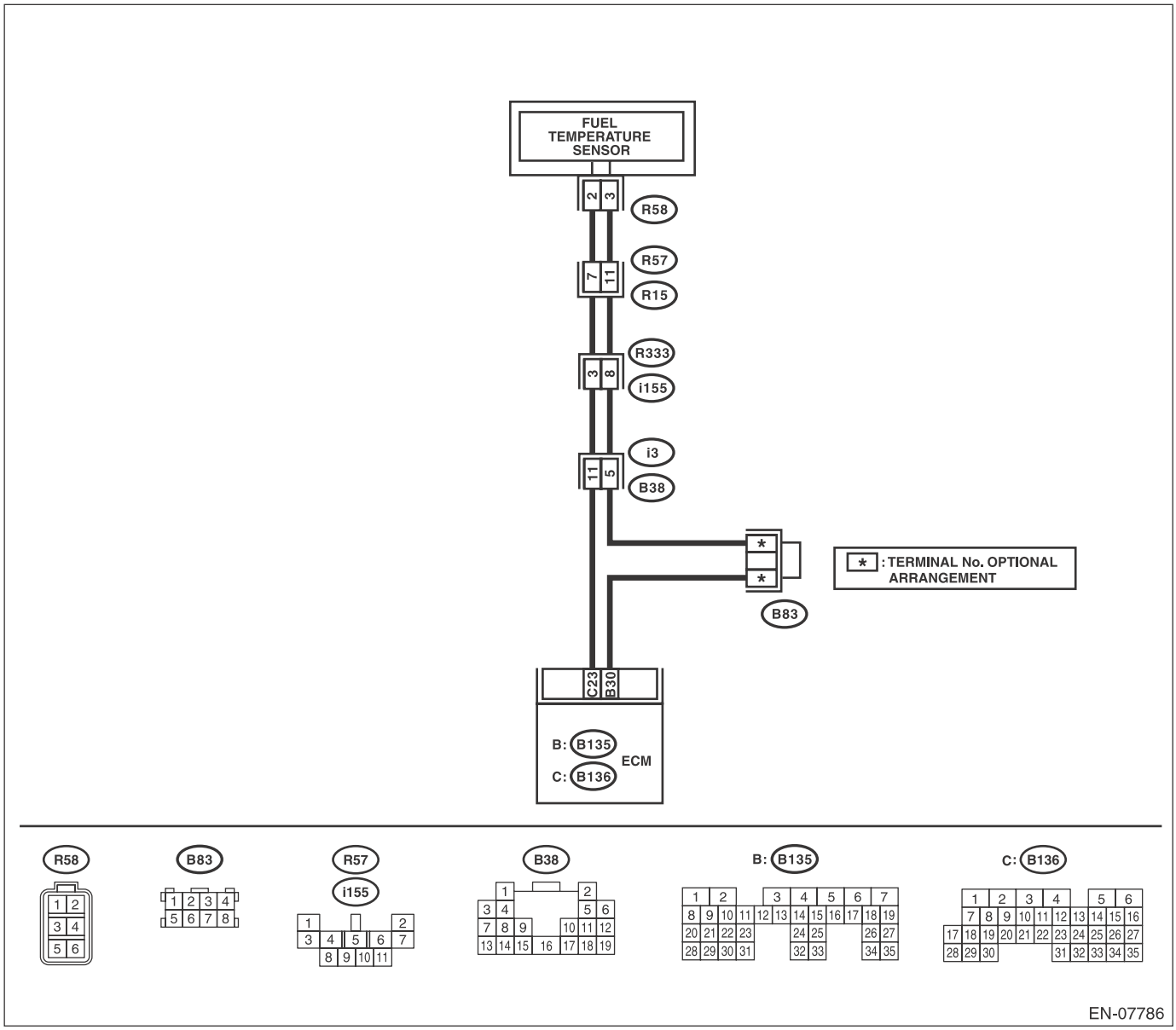

	Step	Check	Yes	No
1	**CHECK CURRENT DATA.** 1) Start the engine. 2) Read the data of fuel temperature sensor signal using Subaru Select Monitor. NOTE: For detailed operation procedures, refer to "READ CURRENT DATA FOR ENGINE". <Ref. to EN(H4SO)(diag)-34, Subaru Select Monitor.>	Is the temperature less than –40°C (–40°F)?	Go to step **2**.	Even if DTC is detected, the circuit has returned to a normal condition at this time. Reproduce the failure, and then perform the diagnosis again. NOTE: In this case, temporary poor contact of connector, temporary open or short circuit of harness may be the cause.
2	**CHECK FOR POOR CONTACT.** Repair any poor contact between the ECM and fuel temperature sensor connectors.	Is there poor contact of the ECM or fuel temperature sensor connectors?	Repair any poor contact between the ECM and fuel temperature sensor connectors.	Go to step **3**.
3	**CHECK HARNESS BETWEEN ECM AND FUEL TEMPERATURE SENSOR CONNECTOR.** 1) Turn the ignition switch to OFF. 2) Disconnect the connector from ECM and fuel temperature sensor. 3) Measure the resistance of the harness between the ECM and fuel temperature sensor connector. ***Connector & terminal*** ***(B136) No. 23 — (R58) No. 2:*** ***(B135) No. 30 — (R58) No. 3:***	Is the resistance less than 1 Ω?	Go to step **4**.	Repair the harness and connector. NOTE: In this case, repair the following item: • Open circuit in harness between ECM and fuel temperature sensor connector • Poor contact of coupling connector • Poor contact of joint connector
4	**CHECK HARNESS BETWEEN ECM AND FUEL TEMPERATURE SENSOR CONNECTOR.** 1) Connect all connectors. 2) Turn the ignition switch to ON. 3) Measure the voltage between ECM and chassis ground. ***Connector & terminal*** ***(B136) No. 23 (+) — Chassis ground (–):***	Is the voltage 5 V or more?	Repair the short circuit to power in the harness between the ECM and fuel temperature sensor connector.	Replace the fuel temperature sensor. <Ref. to EC(H4SO)-13, Fuel Temperature Sensor.>

AP:DTC P0196 ENGINE OIL TEMPERATURE SENSOR CIRCUIT RANGE/PERFORMANCE

DTC DETECTING CONDITION:

- Detected when two consecutive driving cycles with fault occur.
- GENERAL DESCRIPTION <Ref. to GD(H4SO)-76, DTC P0196 ENGINE OIL TEMPERATURE SENSOR CIRCUIT RANGE/PERFORMANCE, Diagnostic Trouble Code (DTC) Detecting Criteria.>

TROUBLE SYMPTOM:

- Hard to start
- Improper idling
- Poor driving performance

CAUTION:

After servicing or replacing faulty parts, perform Clear Memory Mode <Ref. to EN(H4SO)(diag)-54, OPERATION, Clear Memory Mode.>, and Inspection Mode <Ref. to EN(H4SO)(diag)-42, PROCEDURE, Inspection Mode.>.

WIRING DIAGRAM:

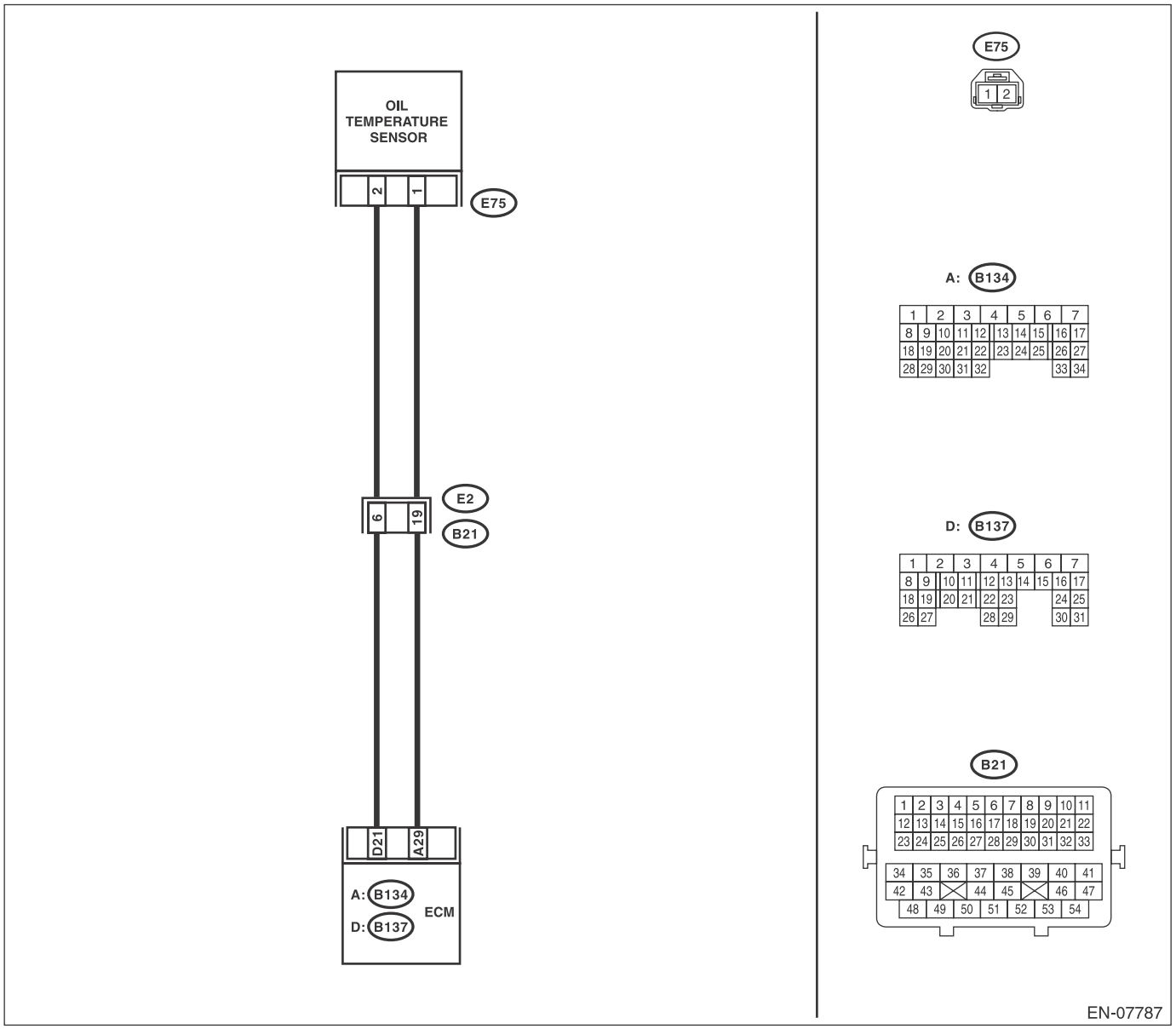

Step		Check	Yes	No
1	**CHECK FOR ANY OTHER DTC ON DISPLAY.**	Is any other DTC displayed?	Check the appropriate DTC using the “List of Diagnostic Trouble Code (DTC)”. <Ref. to EN(H4SO)(diag)-79, List of Diagnostic Trouble Code (DTC).>	Replace the oil temperature sensor. <Ref. to FU(H4SO)-34, Oil Temperature Sensor.>

AQ:DTC P0197 ENGINE OIL TEMPERATURE SENSOR LOW

DTC DETECTING CONDITION:

- Immediately at fault recognition
- GENERAL DESCRIPTION <Ref. to GD(H4SO)-78, DTC P0197 ENGINE OIL TEMPERATURE SENSOR LOW, Diagnostic Trouble Code (DTC) Detecting Criteria.>

TROUBLE SYMPTOM:

- Hard to start
- Improper idling
- Poor driving performance

CAUTION:
After servicing or replacing faulty parts, perform Clear Memory Mode <Ref. to EN(H4SO)(diag)-54, OPERATION, Clear Memory Mode.>, and Inspection Mode <Ref. to EN(H4SO)(diag)-42, PROCEDURE, Inspection Mode.>.

WIRING DIAGRAM:

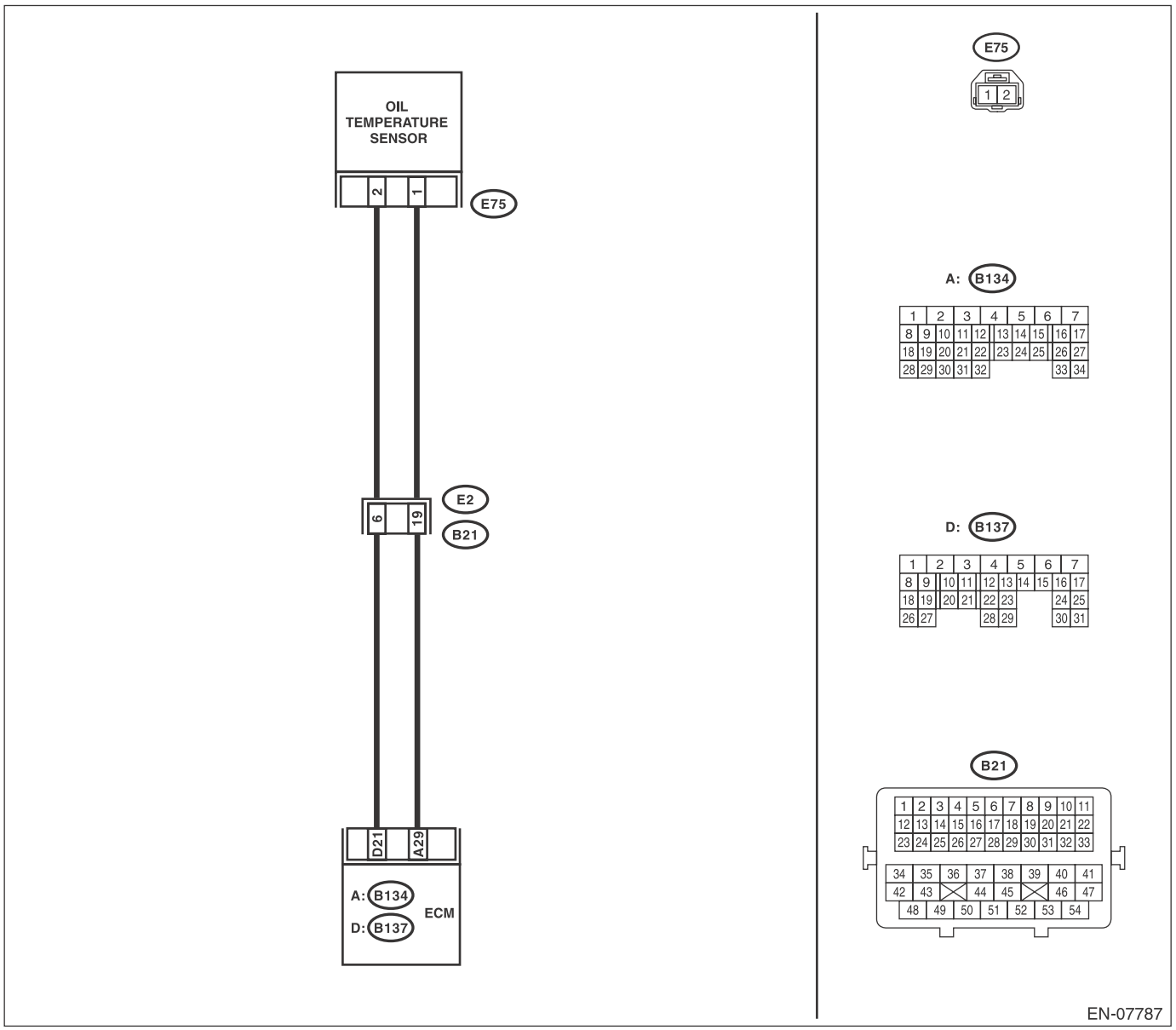

	Step	Check	Yes	No
1	**CHECK CURRENT DATA.** 1) Start the engine. 2) Read the data of oil temperature sensor signal using Subaru Select Monitor or general scan tool. NOTE: • Subaru Select Monitor For detailed operation procedures, refer to "READ CURRENT DATA FOR ENGINE". <Ref. to EN(H4SO)(diag)-34, Subaru Select Monitor.> • General scan tool For detailed operation procedures, refer to the general scan tool operation manual.	Is the oil temperature 215°C (419°F) or more?	Go to step **2**.	Even if DTC is detected, the circuit has returned to a normal condition at this time. Reproduce the failure, and then perform the diagnosis again. NOTE: In this case, temporary poor contact of connector, temporary open or short circuit of harness may be the cause.
2	**CHECK HARNESS BETWEEN ECM AND OIL TEMPERATURE SENSOR CONNECTOR.** 1) Turn the ignition switch to OFF. 2) Disconnect the connector from ECM and oil temperature sensor. 3) Measure the resistance between ECM and chassis ground. ***Connector & terminal*** ***(B137) No. 21 — Chassis ground:***	Is the resistance 1 MΩ or more?	Replace the oil temperature sensor. <Ref. to FU(H4SO)-34, Oil Temperature Sensor.>	Repair the short circuit to ground in harness between ECM and oil temperature sensor connector.

AR:DTC P0198 ENGINE OIL TEMPERATURE SENSOR HIGH

DTC DETECTING CONDITION:

- Immediately at fault recognition
- GENERAL DESCRIPTION <Ref. to GD(H4SO)-79, DTC P0198 ENGINE OIL TEMPERATURE SENSOR HIGH, Diagnostic Trouble Code (DTC) Detecting Criteria.>

TROUBLE SYMPTOM:

- Hard to start
- Improper idling
- Poor driving performance

CAUTION:
After servicing or replacing faulty parts, perform Clear Memory Mode <Ref. to EN(H4SO)(diag)-54, OPERATION, Clear Memory Mode.>, and Inspection Mode <Ref. to EN(H4SO)(diag)-42, PROCEDURE, Inspection Mode.>.

WIRING DIAGRAM:

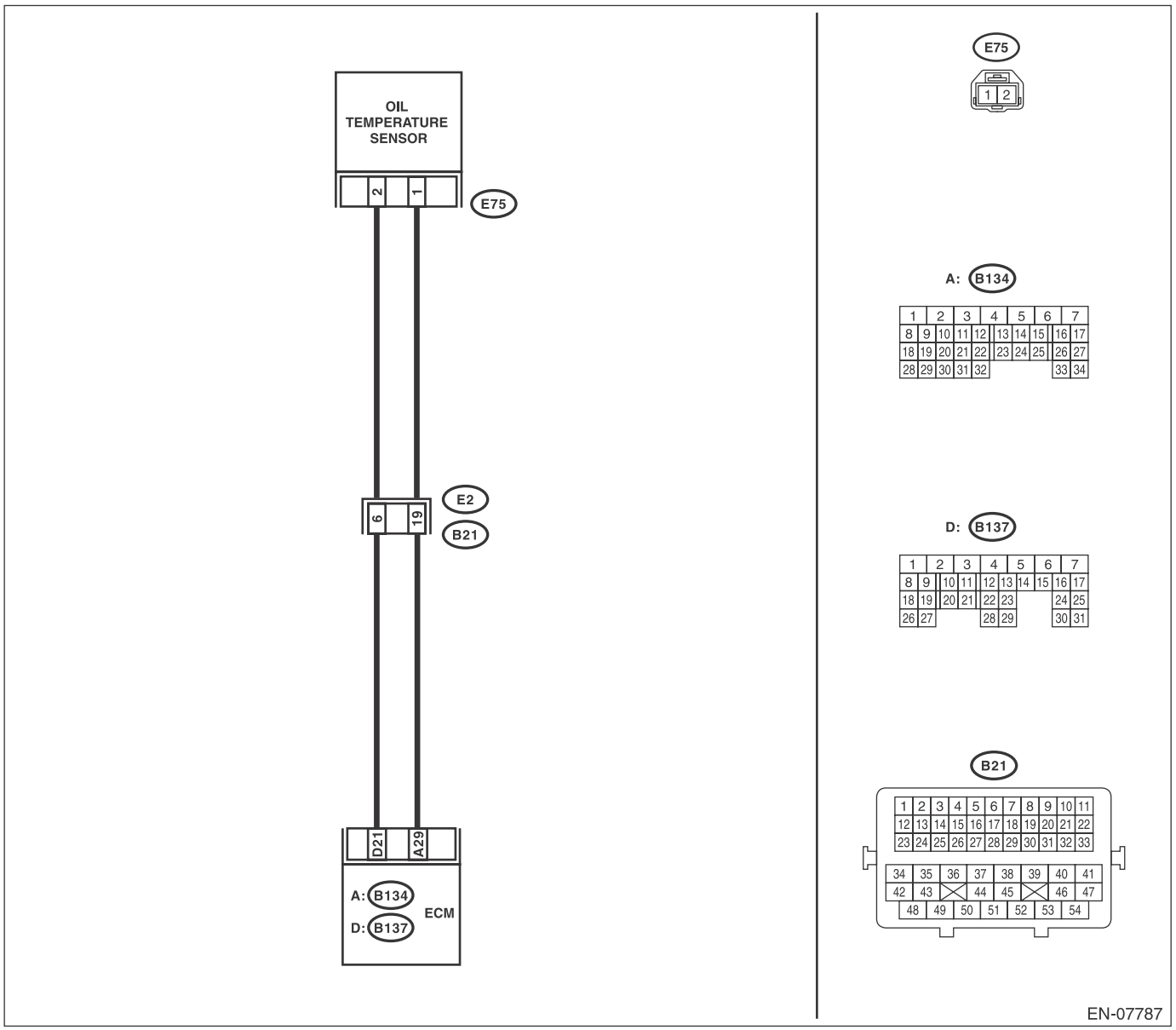

	Step	Check	Yes	No
1	**CHECK CURRENT DATA.** 1) Start the engine. 2) Read the data of oil temperature sensor signal using Subaru Select Monitor or general scan tool. NOTE: • Subaru Select Monitor For detailed operation procedures, refer to "READ CURRENT DATA FOR ENGINE". <Ref. to EN(H4SO)(diag)-34, Subaru Select Monitor.> • General scan tool For detailed operation procedures, refer to the general scan tool operation manual.	Is the oil temperature less than –40°C (–40°F)?	Go to step **2**.	Even if DTC is detected, the circuit has returned to a normal condition at this time. Reproduce the failure, and then perform the diagnosis again. NOTE: In this case, temporary poor contact of connector, temporary open or short circuit of harness may be the cause.
2	**CHECK FOR POOR CONTACT.** Check for poor contact of ECM and oil temperature sensor connector.	Is there poor contact of ECM or oil temperature sensor connector?	Repair the poor contact of ECM or oil temperature sensor connector.	Go to step **3**.
3	**CHECK HARNESS BETWEEN ECM AND OIL TEMPERATURE SENSOR CONNECTOR.** 1) Turn the ignition switch to OFF. 2) Disconnect the connector from ECM and oil temperature sensor. 3) Measure the resistance of harness between ECM and oil temperature sensor connector. ***Connector & terminal*** ***(B137) No. 21 — (E75) No. 2:*** ***(B134) No. 29 — (E75) No. 1:***	Is the resistance less than 1 Ω?	Go to step **4**.	Repair the harness and connector. NOTE: In this case, repair the following item: • Open circuit in harness between ECM and oil temperature sensor connector • Poor contact of coupling connector
4	**CHECK HARNESS BETWEEN ECM AND OIL TEMPERATURE SENSOR CONNECTOR.** 1) Connect all connectors. 2) Turn the ignition switch to ON. 3) Measure the voltage between ECM and chassis ground. ***Connector & terminal*** ***(B137) No. 21 (+) — Chassis ground (–):***	Is the voltage 5 V or more?	Repair the short circuit to power supply in harness between ECM and oil temperature sensor connector.	Replace the oil temperature sensor. <Ref. to FU(H4SO)-34, Oil Temperature Sensor.>

AS:DTC P0222 THROTTLE/PEDAL POSITION SENSOR/SWITCH “B” CIRCUIT LOW

DTC DETECTING CONDITION:

- Immediately at fault recognition
- GENERAL DESCRIPTION <Ref. to GD(H4SO)-80, DTC P0222 THROTTLE/PEDAL POSITION SENSOR/SWITCH “B” CIRCUIT LOW, Diagnostic Trouble Code (DTC) Detecting Criteria.>

TROUBLE SYMPTOM:

- Improper idling
- Poor driving performance
- Engine stalls.

CAUTION:

After servicing or replacing faulty parts, perform Clear Memory Mode <Ref. to EN(H4SO)(diag)-54, OPERATION, Clear Memory Mode.>, and Inspection Mode <Ref. to EN(H4SO)(diag)-42, PROCEDURE, Inspection Mode.>.

WIRING DIAGRAM:

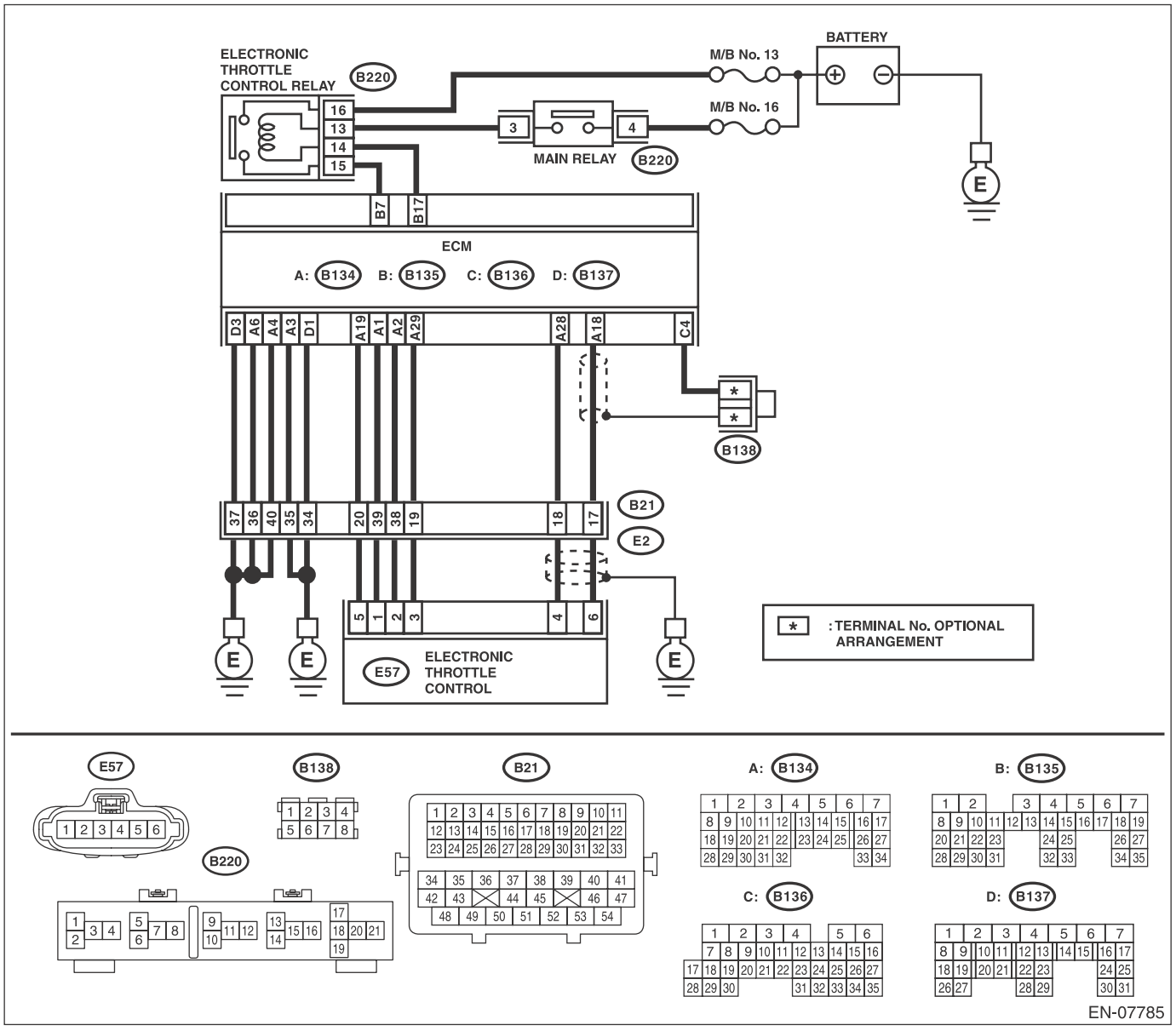

	Step	Check	Yes	No
1	**CHECK HARNESS BETWEEN ECM AND ELECTRONIC THROTTLE CONTROL CONNECTOR.** 1) Turn the ignition switch to OFF. 2) Disconnect the connectors from the ECM and electronic throttle control. 3) Measure the resistance between ECM and chassis ground. ***Connector & terminal*** ***(B134) No. 19 — Chassis ground:*** ***(B134) No. 28 — Chassis ground:***	Is the resistance 1 MΩ or more?	Go to step **2**.	Repair the ground short circuit of harness between ECM and electronic throttle control connector.
2	**CHECK SHORT CIRCUIT INSIDE THE ECM.** 1) Connect the connector to ECM. 2) Measure the resistance between electronic throttle control connector and engine ground. ***Connector & terminal*** ***(E57) No. 4 — Engine ground:***	Is the resistance 1 MΩ or more?	Replace the electronic throttle control. <Ref. to FU(H4SO)-14, Throttle Body.>	Repair the ground short circuit of harness between ECM and electronic throttle control connector. Replace the ECM if defective. <Ref. to FU(H4SO)-39, Engine Control Module (ECM).>

AT:DTC P0223 THROTTLE/PEDAL POSITION SENSOR/SWITCH “B” CIRCUIT HIGH

DTC DETECTING CONDITION:

- Immediately at fault recognition
- GENERAL DESCRIPTION <Ref. to GD(H4SO)-81, DTC P0223 THROTTLE/PEDAL POSITION SENSOR/SWITCH “B” CIRCUIT HIGH, Diagnostic Trouble Code (DTC) Detecting Criteria.>

TROUBLE SYMPTOM:

- Improper idling
- Poor driving performance
- Engine stalls.

CAUTION:

After servicing or replacing faulty parts, perform Clear Memory Mode <Ref. to EN(H4SO)(diag)-54, OPERATION, Clear Memory Mode.>, and Inspection Mode <Ref. to EN(H4SO)(diag)-42, PROCEDURE, Inspection Mode.>.

WIRING DIAGRAM:

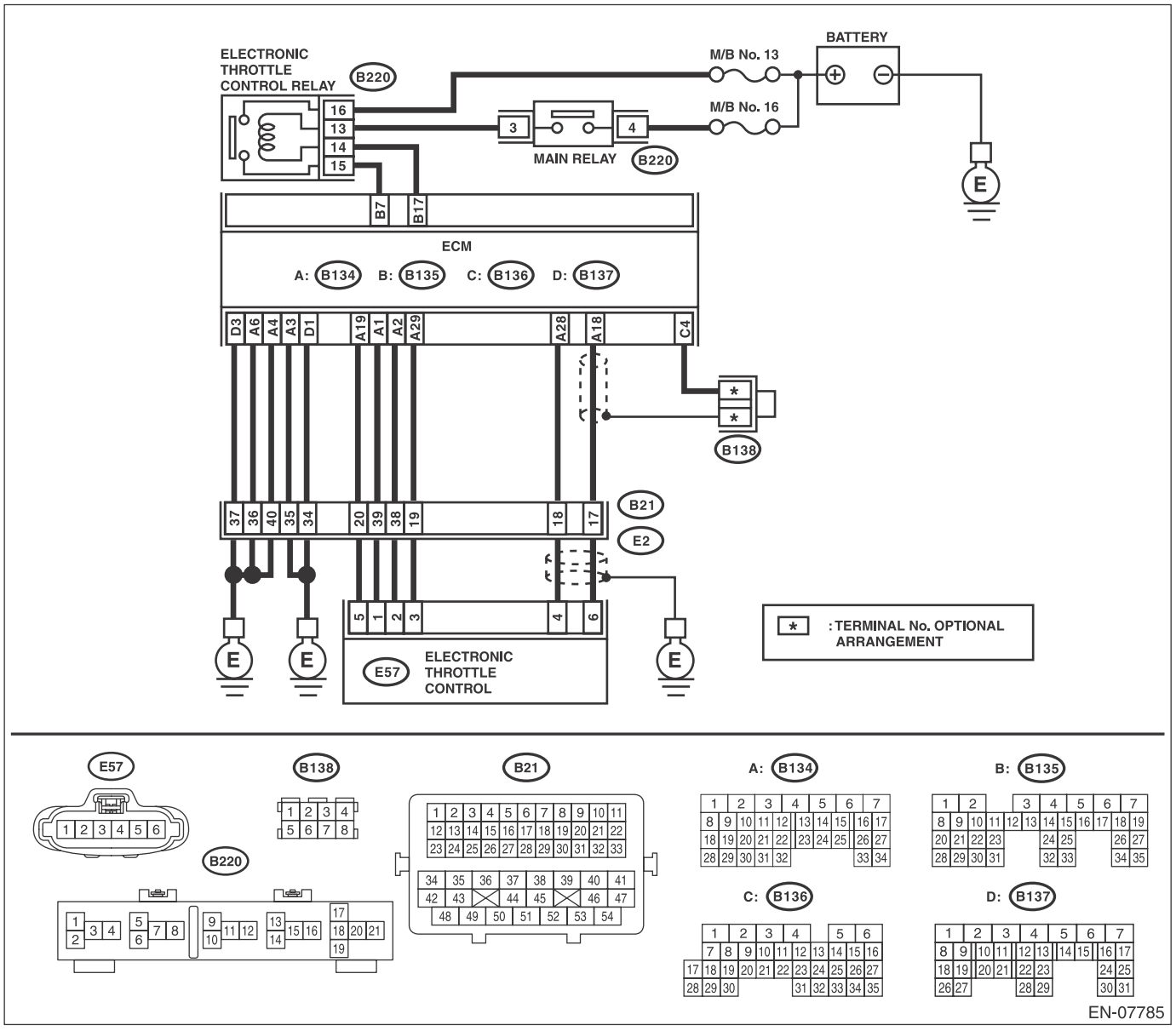

	Step	Check	Yes	No
1	**CHECK HARNESS BETWEEN ECM AND ELECTRONIC THROTTLE CONTROL CONNECTOR.** 1) Turn the ignition switch to OFF. 2) Disconnect the connectors from the ECM and electronic throttle control. 3) Measure the resistance of harness between ECM and electronic throttle control connector. ***Connector & terminal*** ***(B134) No. 28 — (E57) No. 4:*** ***(B134) No. 29 — (E57) No. 3:***	Is the resistance less than 1 Ω?	Go to step **2**.	Repair the harness and connector. NOTE: In this case, repair the following item: • Open circuit in harness between ECM and electronic throttle control connector • Poor contact of coupling connector
2	**CHECK HARNESS BETWEEN ECM AND ELECTRONIC THROTTLE CONTROL CONNECTOR.** 1) Connect the connector to ECM. 2) Measure the resistance between electronic throttle control connector and engine ground. ***Connector & terminal*** ***(E57) No. 3 — Engine ground:***	Is the resistance less than 5 Ω?	Go to step **3**.	Repair the harness and connector. NOTE: In this case, repair the following item: • Open circuit of harness between ECM and engine ground • Poor contact of ECM connector • Poor contact of coupling connector
3	**CHECK HARNESS BETWEEN ECM AND ELECTRONIC THROTTLE CONTROL CONNECTOR.** 1) Turn the ignition switch to ON. 2) Measure the voltage between electronic throttle control connector and engine ground. ***Connector & terminal*** ***(E57) No. 4 (+) — Engine ground (–):***	Is the voltage 5 V or more?	Repair the short circuit of harness to power supply between ECM and electronic throttle control connector.	Go to step **4**.
4	**CHECK HARNESS BETWEEN ECM AND ELECTRONIC THROTTLE CONTROL CONNECTOR.** 1) Turn the ignition switch to OFF. 2) Disconnect the connector from ECM. 3) Measure the resistance between ECM connectors. ***Connector & terminal*** ***(B134) No. 19 — (B134) No. 28:***	Is the resistance 1 MΩ or more?	Repair the poor contact of electronic throttle control connector. Replace the electronic throttle control if defective. <Ref. to FU(H4SO)-14, Throttle Body.>	Repair the short circuit of harness to power supply between ECM and electronic throttle control connector.

AU:DTC P0301 CYLINDER 1 MISFIRE DETECTED

NOTE:
For the diagnostic procedure, refer to DTC P0304. <Ref. to EN(H4SO)(diag)-174, DTC P0304 CYLINDER 4 MISFIRE DETECTED, Diagnostic Procedure with Diagnostic Trouble Code (DTC).>

AV:DTC P0302 CYLINDER 2 MISFIRE DETECTED

NOTE:
For the diagnostic procedure, refer to DTC P0304. <Ref. to EN(H4SO)(diag)-174, DTC P0304 CYLINDER 4 MISFIRE DETECTED, Diagnostic Procedure with Diagnostic Trouble Code (DTC).>

AW:DTC P0303 CYLINDER 3 MISFIRE DETECTED

NOTE:
For the diagnostic procedure, refer to DTC P0304. <Ref. to EN(H4SO)(diag)-174, DTC P0304 CYLINDER 4 MISFIRE DETECTED, Diagnostic Procedure with Diagnostic Trouble Code (DTC).>

AX:DTC P0304 CYLINDER 4 MISFIRE DETECTED

DTC DETECTING CONDITION:

- Detected when two consecutive driving cycles with fault occur.
- Immediately at fault recognition (A misfire which could damage catalyst occurs.)
- GENERAL DESCRIPTION <Ref. to GD(H4SO)-87, DTC P0304 CYLINDER 4 MISFIRE DETECTED, Diagnostic Trouble Code (DTC) Detecting Criteria.>

TROUBLE SYMPTOM:

- Engine stalls
- Improper idling
- Rough driving

CAUTION:

After servicing or replacing faulty parts, perform Clear Memory Mode <Ref. to EN(H4SO)(diag)-54, OPERATION, Clear Memory Mode.>, and Inspection Mode <Ref. to EN(H4SO)(diag)-42, PROCEDURE, Inspection Mode.>.

WIRING DIAGRAM:

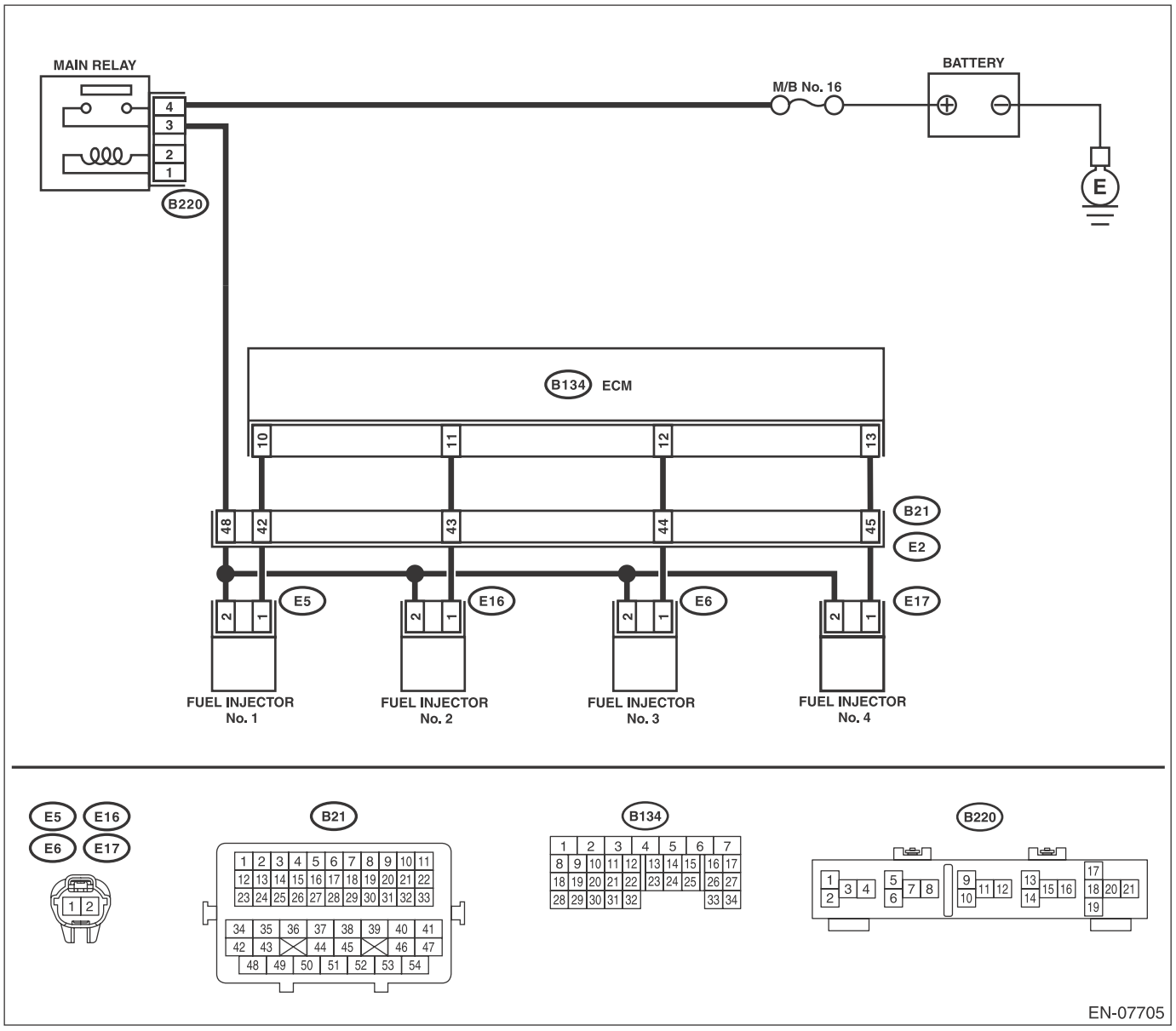

	Step	Check	Yes	No
1	**CHECK OUTPUT SIGNAL OF ECM.** 1) Turn the ignition switch to ON. 2) Measure the voltage between ECM and chassis ground on faulty cylinders. ***Connector & terminal*** ***#1 (B134) No. 10 (+) — Chassis ground (–):*** ***#2 (B134) No. 11 (+) — Chassis ground (–):*** ***#3 (B134) No. 12 (+) — Chassis ground (–):*** ***#4 (B134) No. 13 (+) — Chassis ground (–):***	Is the voltage 10 V or more?	Go to step **6.**	Go to step **2.**
2	**CHECK HARNESS BETWEEN ECM AND FUEL INJECTOR CONNECTOR.** 1) Turn the ignition switch to OFF. 2) Disconnect the connector from fuel injector on faulty cylinders. 3) Measure the resistance between fuel injector connector and engine ground on faulty cylinders. ***Connector & terminal*** ***#1 (E5) No. 1 — Engine ground:*** ***#2 (E16) No. 1 — Engine ground:*** ***#3 (E6) No. 1 — Engine ground:*** ***#4 (E17) No. 1 — Engine ground:***	Is the resistance 1 MΩ or more?	Go to step **3.**	Repair the ground short circuit of harness between ECM and fuel injector connector.
3	**CHECK HARNESS BETWEEN ECM AND FUEL INJECTOR CONNECTOR.** Measure the resistance of harness between ECM and fuel injector connector on faulty cylinders. ***Connector & terminal*** ***#1 (B134) No. 10 — (E5) No. 1:*** ***#2 (B134) No. 11 — (E16) No. 1:*** ***#3 (B134) No. 12 — (E6) No. 1:*** ***#4 (B134) No. 13 — (E17) No. 1:***	Is the resistance less than 1 Ω?	Go to step **4.**	Repair the harness and connector. NOTE: In this case, repair the following item: • Open circuit in harness between ECM and fuel injector connector • Poor contact of coupling connector
4	**CHECK FUEL INJECTOR.** Measure the resistance between fuel injector terminals on faulty cylinder. ***Terminals*** ***No. 1 — No. 2:***	Is the resistance 5 — 20 Ω?	Go to step **5.**	Replace the faulty fuel injector. <Ref. to FU(H4SO)-32, Fuel Injector.>
5	**CHECK POWER SUPPLY LINE.** 1) Turn the ignition switch to ON. 2) Measure the voltage between fuel injector and engine ground on faulty cylinders. ***Connector & terminal*** ***#1 (E5) No. 2 (+) — Engine ground (–):*** ***#2 (E16) No. 2 (+) — Engine ground (–):*** ***#3 (E6) No. 2 (+) — Engine ground (–):*** ***#4 (E17) No. 2 (+) — Engine ground (–):***	Is the voltage 10 V or more?	Repair the poor contact of all connectors in fuel injector circuit.	Repair the harness and connector. NOTE: In this case, repair the following item: • Open circuit in harness between the main relay connector and fuel injector connector on faulty cylinders • Poor contact of coupling connector • Poor contact of main relay connector

	Step	Check	Yes	No
6	**CHECK HARNESS BETWEEN ECM AND FUEL INJECTOR CONNECTOR.** 1) Turn the ignition switch to OFF. 2) Disconnect the connector from fuel injector on faulty cylinders. 3) Turn the ignition switch to ON. 4) Measure the voltage between ECM and chassis ground on faulty cylinders. ***Connector & terminal*** ***#1 (B134) No. 10 (+) — Chassis ground (–):*** ***#2 (B134) No. 11 (+) — Chassis ground (–):*** ***#3 (B134) No. 12 (+) — Chassis ground (–):*** ***#4 (B134) No. 13 (+) — Chassis ground (–):***	Is the voltage 10 V or more?	Repair the short circuit to power in harness between ECM and fuel injector connector.	Go to step **7**.
7	**CHECK FUEL INJECTOR.** 1) Turn the ignition switch to OFF. 2) Measure the resistance between fuel injector terminals on faulty cylinder. ***Terminals*** ***No. 1 — No. 2:***	Is the resistance 5 — 20 Ω?	Replace the faulty fuel injector. <Ref. to FU(H4SO)-32, Fuel Injector.>	Go to step **8**.
8	**CHECK INSTALLATION CONDITION OF CAMSHAFT POSITION SENSOR/CRANKSHAFT POSITION SENSOR.**	Is the camshaft position sensor or crankshaft position sensor loosely installed?	Tighten the camshaft position sensor or crankshaft position sensor.	Go to step **9**.
9	**CHECK CRANK SPROCKET.** Remove the timing belt cover. <Ref. to ME(H4SO)-46, REMOVAL, Timing Belt Cover.>	Is the crank sprocket rusted or does it have broken teeth?	Replace the crank sprocket. <Ref. to ME(H4SO)-53, Crank Sprocket.>	Go to step **10**.
10	**CHECK INSTALLATION CONDITION OF TIMING BELT.** Turn the crankshaft using ST, and align the alignment mark on crank sprocket with alignment mark on cylinder block. ST 499987500 CRANKSHAFT SOCKET	Is the timing belt dislocated from its proper position?	Repair the installation condition of timing belt. <Ref. to ME(H4SO)-47, Timing Belt.>	Go to step **11**.
11	**CHECK FUEL LEVEL.**	Is the fuel meter indication higher than the “Lower” level?	Go to step **12**.	Refill the fuel so that fuel meter indication is higher than the “Lower” level. After replenishing fuel, Go to step **12**.
12	**CHECK STATUS OF MALFUNCTION INDICATOR LIGHT.** 1) Clear the memory using the Subaru Select Monitor or general scan tool. <Ref. to EN(H4SO)(diag)-54, Clear Memory Mode.> 2) Start the engine, and drive the vehicle 10 minutes or more.	Does the malfunction indicator light illuminate or blink?	Go to step **14**.	Go to step **13**.

	Step	Check	Yes	No
13	**CHECK CAUSE OF MISFIRE.**	Was the cause of misfire identified when the engine is running?	Finish diagnostics operation, if the engine has no abnormality.	Repair the poor contact of connector. NOTE: In this case, repair the following item: • Poor contact of ignition coil connector • Poor contact of fuel injector connector on faulty cylinders • Poor contact of ECM connector • Poor contact of coupling connector
14	**CHECK AIR INTAKE SYSTEM.**	Is there any fault in air intake system?	Repair the air intake system. NOTE: Check the following items. • Are there air leaks or air suction caused by loose or dislocated nuts and bolts? • Are there cracks or any disconnection of hoses?	Go to step **15**.
15	**CHECK MISFIRE SYMPTOM.** 1) Turn the ignition switch to ON. 2) Read the DTC. NOTE: • Subaru Select Monitor For detailed operation procedures, refer to “READ CURRENT DATA FOR ENGINE”. <Ref. to EN(H4SO)(diag)-34, Subaru Select Monitor.> • General scan tool For detailed operation procedures, refer to the general scan tool operation manual.	Does the Subaru Select Monitor or general scan tool indicate only one DTC?	Go to step **20**.	Go to step **16**.
16	**CHECK DTC.**	Is DTC P0301 and P0302 displayed on the Subaru Select Monitor or general scan tool?	Go to step **21**.	Go to step **17**.
17	**CHECK DTC.**	Is DTC P0303 and P0304 displayed on the Subaru Select Monitor or general scan tool?	Go to step **22**.	Go to step **18**.
18	**CHECK DTC.**	Is DTC P0301 and P0303 displayed on the Subaru Select Monitor or general scan tool?	Go to step **23**.	Go to step **19**.
19	**CHECK DTC.**	Is DTC P0302 and P0304 displayed on the Subaru Select Monitor or general scan tool?	Go to step **24**.	Go to step **25**.

Step		Check	Yes	No
20	**ONLY ONE CYLINDER.**	Is there any fault in the cylinder?	Repair or replace faulty parts. NOTE: Check the following items. • Spark plug • Spark plug cord • Fuel injector • Compression ratio	Go to DTC P0171. <Ref. to EN(H4SO)(diag)-154, DTC P0171 SYSTEM TOO LEAN (BANK 1), Diagnostic Procedure with Diagnostic Trouble Code (DTC).>
21	**GROUP OF #1 AND #2 CYLINDERS.**	Are there any faults in #1 and #2 cylinders?	Repair or replace faulty parts. NOTE: • Check the following items. • Spark plug • Fuel injector • Ignition coil • Compression ratio • If any fault are not found, check the "IGNITION CONTROL SYSTEM" of #1 and #2 cylinders side. <Ref. to EN(H4SO)(diag)-73, IGNITION CONTROL SYSTEM, Diagnostics for Engine Starting Failure.>	Go to DTC P0171. <Ref. to EN(H4SO)(diag)-154, DTC P0171 SYSTEM TOO LEAN (BANK 1), Diagnostic Procedure with Diagnostic Trouble Code (DTC).>
22	**GROUP OF #3 AND #4 CYLINDERS.**	Are there any faults in #3 and #4 cylinders?	Repair or replace faulty parts. NOTE: • Check the following items. • Spark plug • Fuel injector • Ignition coil • Compression ratio • If any fault are not found, check the "IGNITION CONTROL SYSTEM" of #3 and #4 cylinders side. <Ref. to EN(H4SO)(diag)-73, IGNITION CONTROL SYSTEM, Diagnostics for Engine Starting Failure.>	Go to DTC P0171. <Ref. to EN(H4SO)(diag)-154, DTC P0171 SYSTEM TOO LEAN (BANK 1), Diagnostic Procedure with Diagnostic Trouble Code (DTC).>

	Step	Check	Yes	No
23	GROUP OF #1 AND #3 CYLINDERS.	Are there any faults in #1 and #3 cylinders?	Repair or replace faulty parts. NOTE: Check the following items. • Spark plug • Fuel injector • Compression ratio • Skipping timing belt teeth	Go to DTC P0171. <Ref. to EN(H4SO)(diag)-154, DTC P0171 SYSTEM TOO LEAN (BANK 1), Diagnostic Procedure with Diagnostic Trouble Code (DTC).>
24	GROUP OF #2 AND #4 CYLINDERS.	Are there any faults in #2 and #4 cylinders?	Repair or replace faulty parts. NOTE: Check the following items. • Spark plug • Fuel injector • Compression ratio • Skipping timing belt teeth	Go to DTC P0171. <Ref. to EN(H4SO)(diag)-154, DTC P0171 SYSTEM TOO LEAN (BANK 1), Diagnostic Procedure with Diagnostic Trouble Code (DTC).>
25	CYLINDER AT RANDOM.	Is the engine idle rough?	Go to DTC P0171. <Ref. to EN(H4SO)(diag)-154, DTC P0171 SYSTEM TOO LEAN (BANK 1), Diagnostic Procedure with Diagnostic Trouble Code (DTC).>	Repair or replace faulty parts. NOTE: Check the following items. • Spark plug • Fuel injector • Compression ratio

AY:DTC P0327 KNOCK SENSOR 1 CIRCUIT LOW (BANK 1 OR SINGLE SENSOR)

DTC DETECTING CONDITION:

- Immediately at fault recognition
- GENERAL DESCRIPTION <Ref. to GD(H4SO)-88, DTC P0327 KNOCK SENSOR 1 CIRCUIT LOW (BANK 1 OR SINGLE SENSOR), Diagnostic Trouble Code (DTC) Detecting Criteria.>

TROUBLE SYMPTOM:

- Poor driving performance
- Knocking occurs.

CAUTION:

After servicing or replacing faulty parts, perform Clear Memory Mode <Ref. to EN(H4SO)(diag)-54, OPERATION, Clear Memory Mode.>, and Inspection Mode <Ref. to EN(H4SO)(diag)-42, PROCEDURE, Inspection Mode.>.

WIRING DIAGRAM:

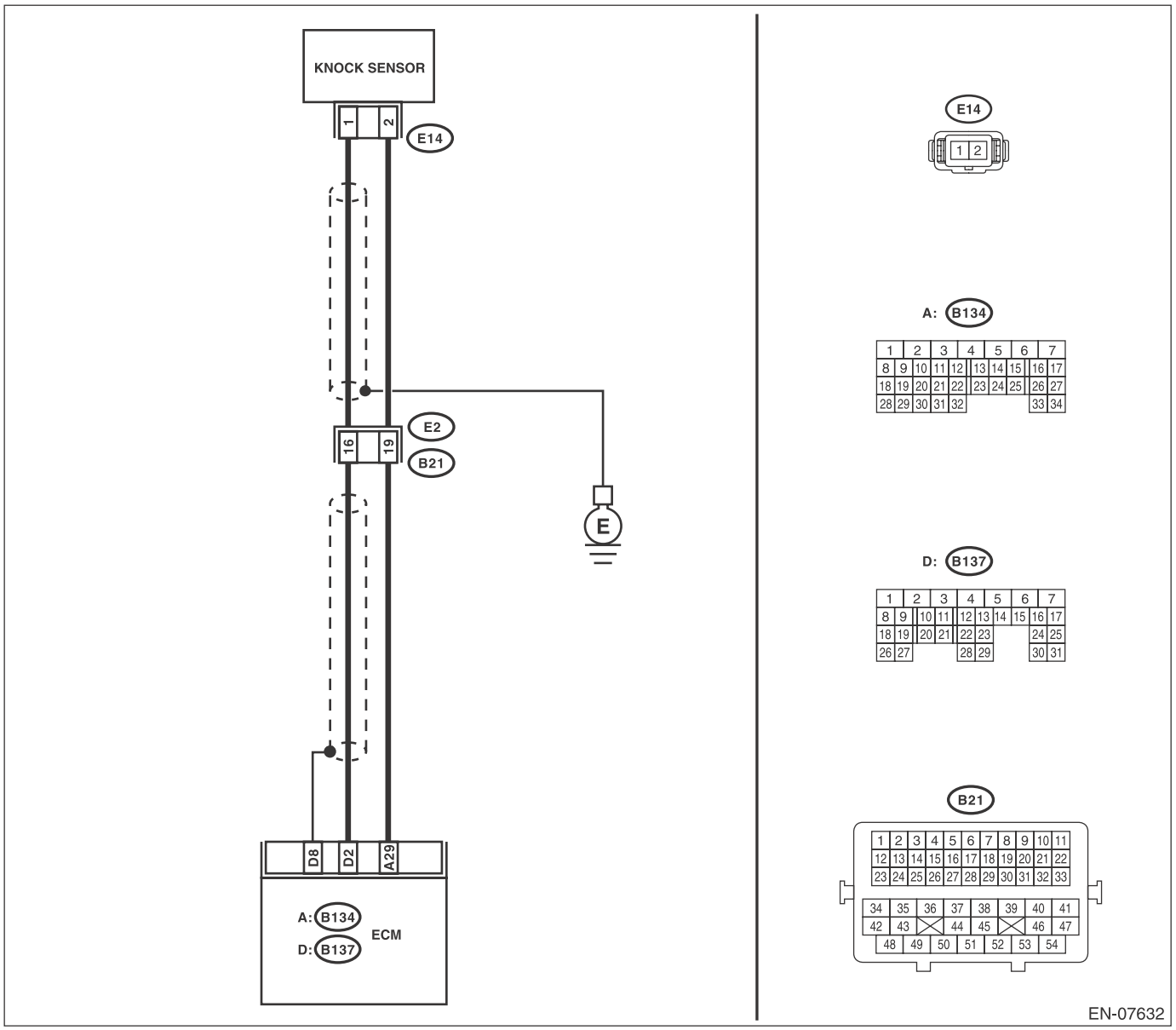

	Step	Check	Yes	No
1	**CHECK HARNESS BETWEEN ECM AND KNOCK SENSOR CONNECTOR.** 1) Turn the ignition switch to OFF. 2) Disconnect the connector from ECM. 3) Measure the resistance between ECM connectors. ***Connector & terminal*** ***(B137) No. 2 — (B134) No. 29:***	Is the resistance 600 kΩ or more?	Go to step **2**.	Repair the poor contact of ECM connector.
2	**CHECK KNOCK SENSOR.** 1) Disconnect the connector from knock sensor. 2) Measure the resistance between knock sensor terminals. ***Terminals*** ***No. 1 — No. 2:***	Is the resistance 600 kΩ or more?	Replace the knock sensor. <Ref. to FU(H4SO)-26, Knock Sensor.>	Repair the harness and connector. NOTE: In this case, repair the following item: • Open circuit in harness between ECM and knock sensor connector • Poor contact of knock sensor connector • Poor contact of coupling connector

AZ:DTC P0328 KNOCK SENSOR 1 CIRCUIT HIGH (BANK 1 OR SINGLE SENSOR)

DTC DETECTING CONDITION:

- Immediately at fault recognition
- GENERAL DESCRIPTION <Ref. to GD(H4SO)-90, DTC P0328 KNOCK SENSOR 1 CIRCUIT HIGH (BANK 1 OR SINGLE SENSOR), Diagnostic Trouble Code (DTC) Detecting Criteria.>

TROUBLE SYMPTOM:

- Poor driving performance
- Knocking occurs.

CAUTION:

After servicing or replacing faulty parts, perform Clear Memory Mode <Ref. to EN(H4SO)(diag)-54, OPERATION, Clear Memory Mode.>, and Inspection Mode <Ref. to EN(H4SO)(diag)-42, PROCEDURE, Inspection Mode.>.

WIRING DIAGRAM:

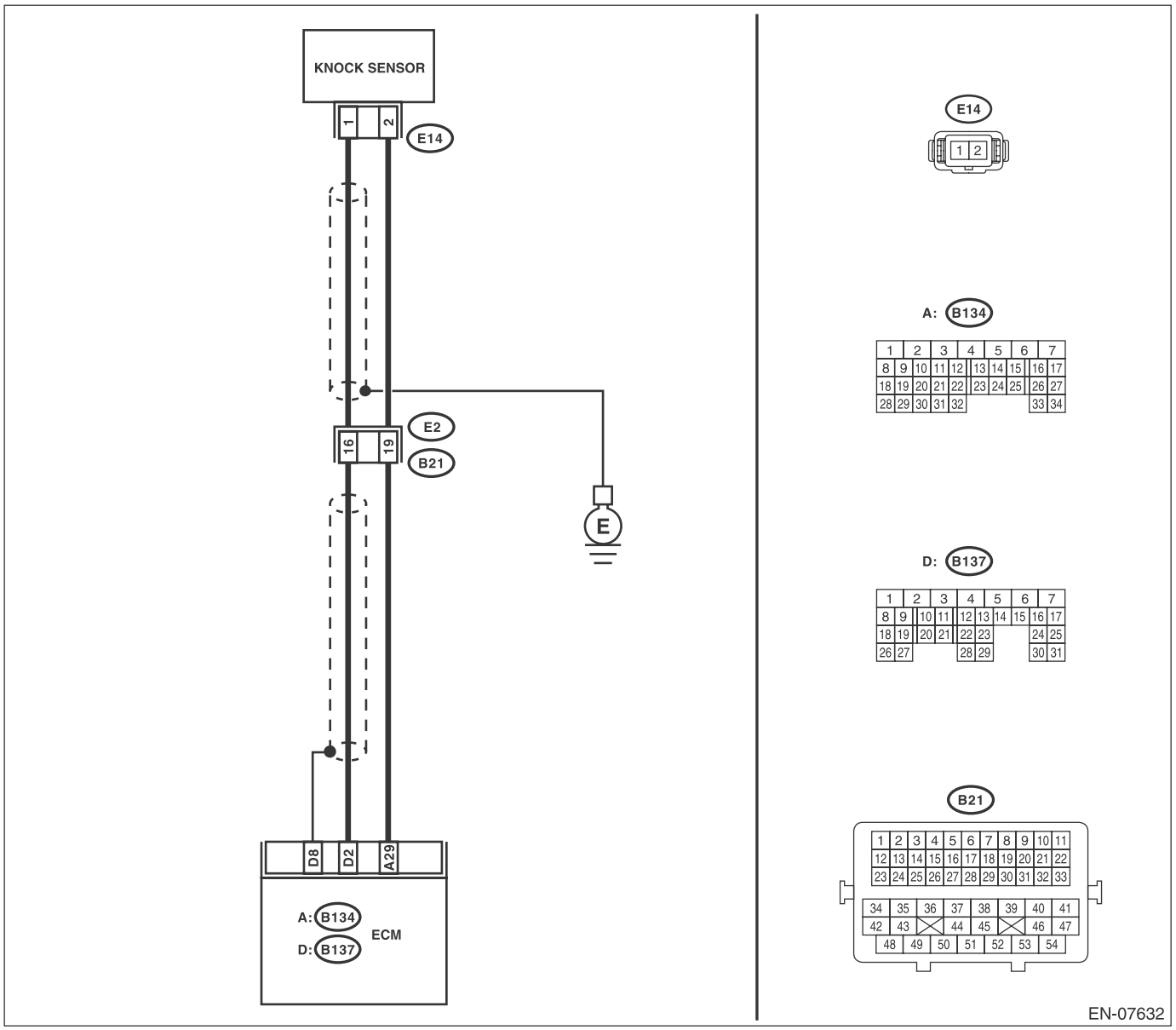

	Step	Check	Yes	No
1	**CHECK HARNESS BETWEEN ECM AND KNOCK SENSOR CONNECTOR.** 1) Turn the ignition switch to OFF. 2) Disconnect the connector from ECM. 3) Measure the resistance between ECM connectors. ***Connector & terminal*** ***(B137) No. 2 — (B134) No. 29:***	Is the resistance less than 500 kΩ?	Go to step **2**.	Go to step **3**.
2	**CHECK KNOCK SENSOR.** 1) Disconnect the connector from knock sensor. 2) Measure the resistance between knock sensor terminals. ***Terminals*** ***No. 1 — No. 2:***	Is the resistance less than 500 kΩ?	Replace the knock sensor. <Ref. to FU(H4SO)-26, Knock Sensor.>	Repair the ground short circuit of harness between ECM and knock sensor connector. NOTE: The harness between both connectors are shielded. Remove the shield and repair the short circuit of the harness.
3	**CHECK INPUT SIGNAL OF ECM.** 1) Connect the connector to ECM. 2) Turn the ignition switch to ON. 3) Measure the voltage between ECM and chassis ground. ***Connector & terminal*** ***(B137) No. 2 (+) — Chassis ground (–):***	Is the voltage 2 V or more?	Even if DTC is detected, the circuit has returned to a normal condition at this time. Reproduce the failure, and then perform the diagnosis again. NOTE: In this case, temporary poor contact of connector, temporary open or short circuit of harness may be the cause.	Repair the poor contact of ECM connector.

BA:DTC P0335 CRANKSHAFT POSITION SENSOR “A” CIRCUIT

DTC DETECTING CONDITION:

- Immediately at fault recognition
- GENERAL DESCRIPTION <Ref. to GD(H4SO)-92, DTC P0335 CRANKSHAFT POSITION SENSOR “A” CIRCUIT, Diagnostic Trouble Code (DTC) Detecting Criteria.>

TROUBLE SYMPTOM:

- Engine stalls.
- Failure of engine to start

CAUTION:

After servicing or replacing faulty parts, perform Clear Memory Mode <Ref. to EN(H4SO)(diag)-54, OPERATION, Clear Memory Mode.>, and Inspection Mode <Ref. to EN(H4SO)(diag)-42, PROCEDURE, Inspection Mode.>.

WIRING DIAGRAM:

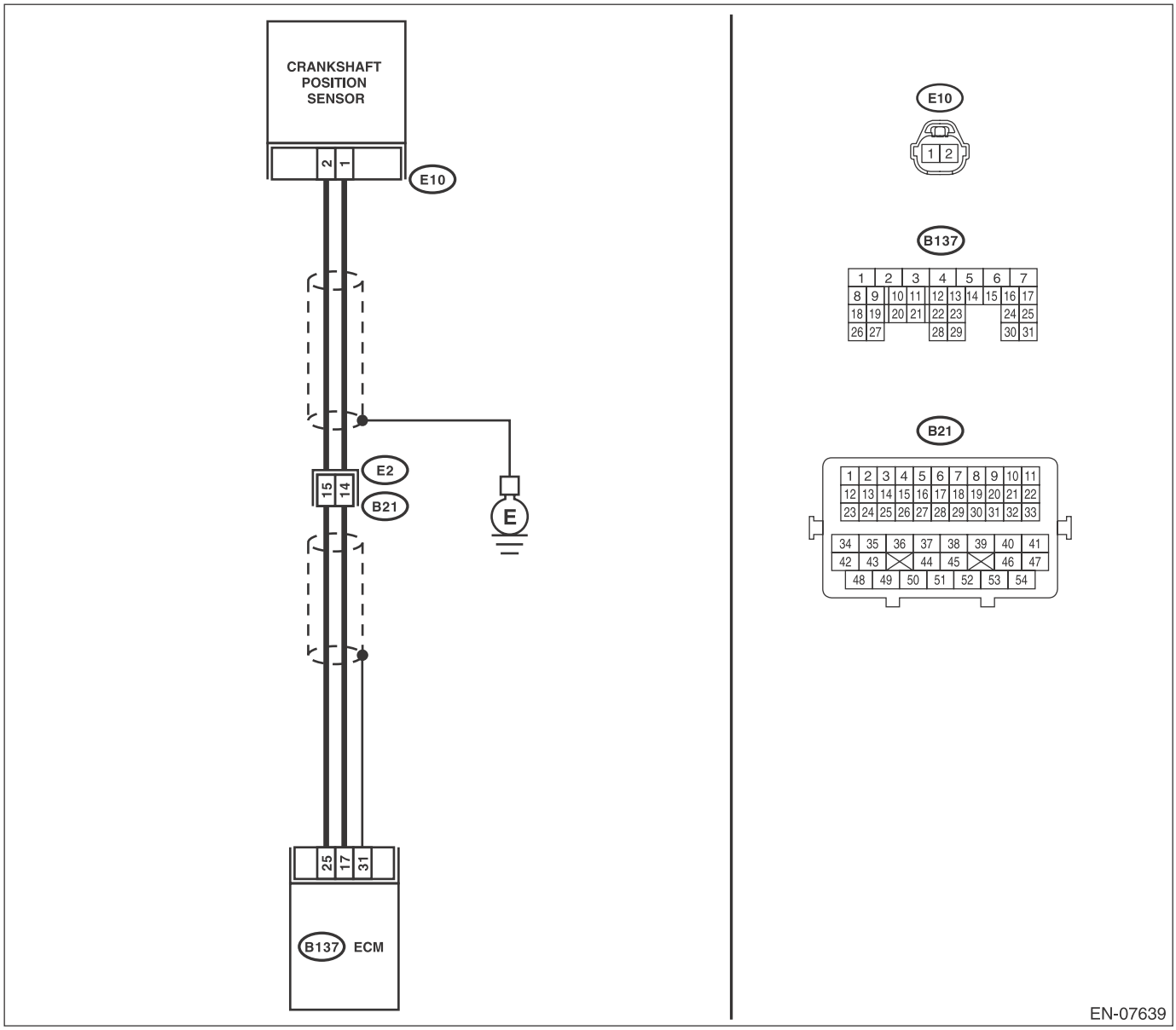

	Step	Check	Yes	No
1	**CHECK INSTALLATION CONDITION OF CRANKSHAFT POSITION SENSOR.**	Is the crankshaft position sensor installation bolt tightened securely?	Go to step **2**.	Tighten the crankshaft position sensor installation bolt securely. <Ref. to FU(H4SO)-22, Crankshaft Position Sensor.>
2	**CHECK CRANKSHAFT POSITION SENSOR.** 1) Turn the ignition switch to OFF. 2) Remove the crankshaft position sensor. 3) Measure the resistance between terminals of crankshaft position sensor connector. ***Terminals*** ***No. 1 — No. 2:***	Is the resistance between 1 and 4 kΩ?	Go to step **3**.	Replace the crankshaft position sensor. <Ref. to FU(H4SO)-22, Crankshaft Position Sensor.>
3	**CHECK HARNESS BETWEEN ECM AND CRANKSHAFT POSITION SENSOR CONNECTOR.** 1) Disconnect the connector from ECM. 2) Measure the resistance of harness between ECM and crankshaft position sensor connector. ***Connector & terminal*** ***(B137) No. 17 — (E10) No. 1:*** ***(B137) No. 25 — (E10) No. 2:***	Is the resistance less than 1 Ω?	Repair the poor contact of ECM and crankshaft position sensor connector.	Repair the harness and connector. NOTE: In this case, repair the following item: • Open circuit in harness between ECM and crankshaft position sensor connector • Poor contact of coupling connector

BB:DTC P0336 CRANKSHAFT POSITION SENSOR “A” CIRCUIT RANGE/PERFORMANCE

DTC DETECTING CONDITION:

- Detected when two consecutive driving cycles with fault occur.
- GENERAL DESCRIPTION <Ref. to GD(H4SO)-94, DTC P0336 CRANKSHAFT POSITION SENSOR “A” CIRCUIT RANGE/PERFORMANCE, Diagnostic Trouble Code (DTC) Detecting Criteria.>

TROUBLE SYMPTOM:

- Engine stalls
- Failure of engine to start

CAUTION:

After servicing or replacing faulty parts, perform Clear Memory Mode <Ref. to EN(H4SO)(diag)-54, OPERATION, Clear Memory Mode.>, and Inspection Mode <Ref. to EN(H4SO)(diag)-42, PROCEDURE, Inspection Mode.>.

WIRING DIAGRAM:

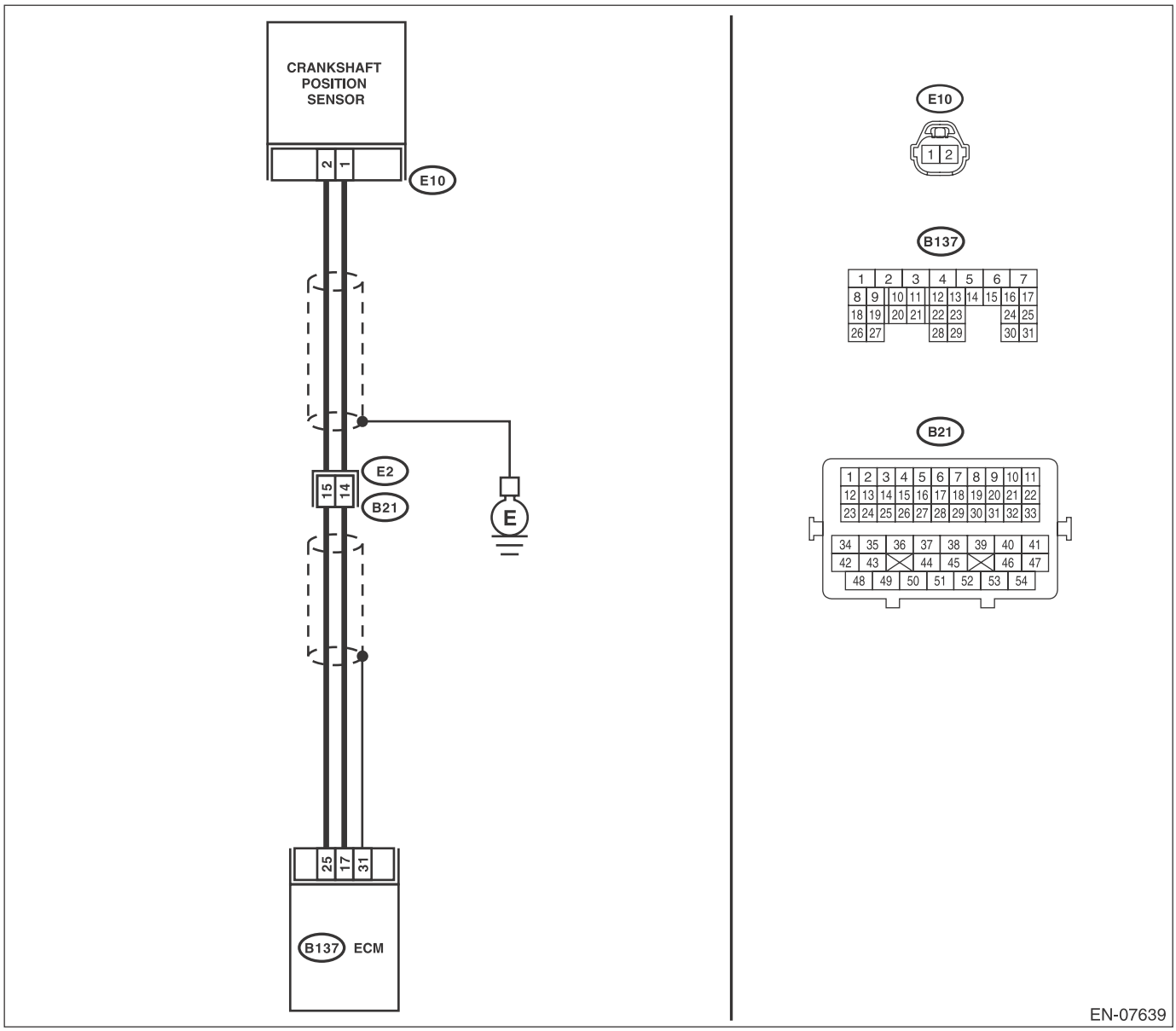

	Step	Check	Yes	No
1	**CHECK CONDITION OF CRANKSHAFT POSITION SENSOR.** Turn the ignition switch to OFF.	Is the crankshaft position sensor installation bolt tightened securely?	Go to step **2**.	Tighten the crankshaft position sensor installation bolt securely. <Ref. to FU(H4SO)-22, Crankshaft Position Sensor.>
2	**CHECK CRANK SPROCKET.** Remove the timing belt cover.	Are crank sprocket teeth cracked or damaged?	Replace the crank sprocket. <Ref. to ME(H4SO)-53, Crank Sprocket.>	Go to step **3**.
3	**CHECK INSTALLATION CONDITION OF TIMING BELT.** Turn the crankshaft, and align alignment mark on crank sprocket with alignment mark on cylinder block. ST 499987500 CRANKSHAFT SOCKET	Is the timing belt dislocated from its proper position?	Repair the installation condition of timing belt. <Ref. to ME(H4SO)-47, Timing Belt.>	Replace the crankshaft position sensor. <Ref. to FU(H4SO)-22, Crankshaft Position Sensor.>

BC:DTC P0340 CAMSHAFT POSITION SENSOR “A” CIRCUIT (BANK 1 OR SINGLE SENSOR)

DTC DETECTING CONDITION:

- Immediately at fault recognition
- GENERAL DESCRIPTION <Ref. to GD(H4SO)-96, DTC P0340 CAMSHAFT POSITION SENSOR “A” CIRCUIT (BANK 1 OR SINGLE SENSOR), Diagnostic Trouble Code (DTC) Detecting Criteria.>

TROUBLE SYMPTOM:

- Engine stalls.
- Failure of engine to start

CAUTION:

After servicing or replacing faulty parts, perform Clear Memory Mode <Ref. to EN(H4SO)(diag)-54, OPERATION, Clear Memory Mode.>, and Inspection Mode <Ref. to EN(H4SO)(diag)-42, PROCEDURE, Inspection Mode.>.

WIRING DIAGRAM:

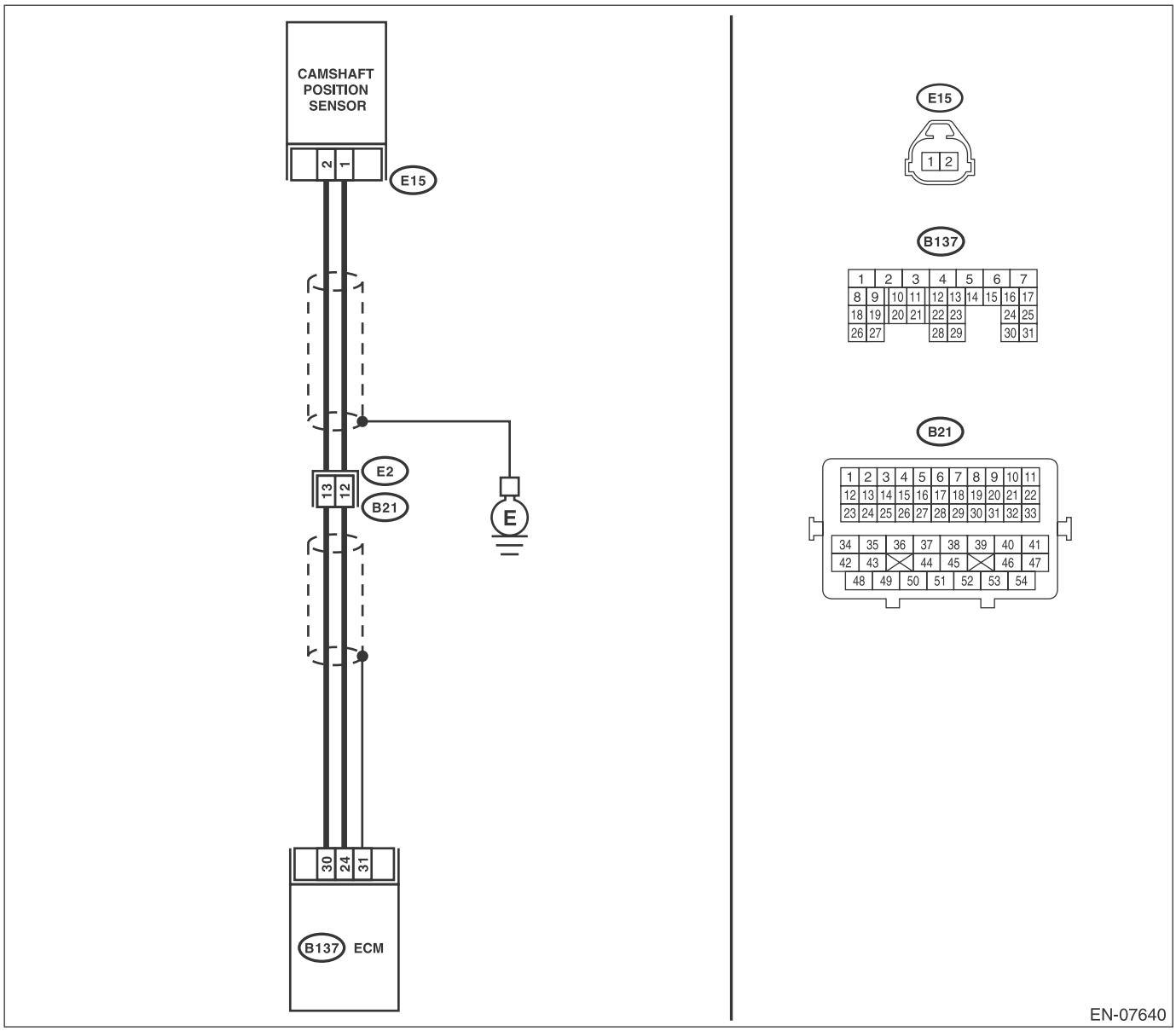

	Step	Check	Yes	No
1	**CHECK HARNESS BETWEEN ECM AND CAMSHAFT POSITION SENSOR CONNECTOR.** 1) Turn the ignition switch to OFF. 2) Disconnect the connector from ECM and camshaft position sensor. 3) Measure the resistance of harness between ECM and camshaft position sensor connector. ***Connector & terminal*** ***(B137) No. 24 — (E15) No. 1:*** ***(B137) No. 30 — (E15) No. 2:***	Is the resistance less than 1 Ω?	Go to step **2**.	Repair the harness and connector. NOTE: In this case, repair the following item: • Open circuit in harness between ECM and camshaft position sensor connector • Poor contact of ECM connector • Poor contact of coupling connector
2	**CHECK HARNESS BETWEEN ECM AND CAMSHAFT POSITION SENSOR CONNECTOR.** Measure the resistance between camshaft position sensor connector and engine ground. ***Connector & terminal*** ***(E15) No. 1 — Engine ground:***	Is the resistance 1 MΩ or more?	Go to step **3**.	Repair short circuit to ground in harness between ECM and camshaft position sensor connector. NOTE: The harness between both connectors are shielded. Remove the shield and repair the ground short circuit of the harness circuit.
3	**CHECK INSTALLATION CONDITION OF CAMSHAFT POSITION SENSOR.**	Is the camshaft position sensor installation bolt tightened securely?	Go to step **4**.	Tighten the camshaft position sensor installation bolt securely. <Ref. to FU(H4SO)-24, Camshaft Position Sensor.>
4	**CHECK CAMSHAFT POSITION SENSOR.** 1) Remove the camshaft position sensor. 2) Measure the resistance between terminals of camshaft position sensor connector. ***Terminals*** ***No. 1 — No. 2:***	Is the resistance between 1 and 4 kΩ?	Repair the poor contact of ECM or camshaft position sensor connector.	Replace the camshaft position sensor. <Ref. to FU(H4SO)-24, Camshaft Position Sensor.>

BD:DTC P0341 CAMSHAFT POSITION SENSOR “A” CIRCUIT RANGE/PERFORMANCE (BANK 1 OR SINGLE SENSOR)

DTC DETECTING CONDITION:

- Detected when two consecutive driving cycles with fault occur.
- GENERAL DESCRIPTION <Ref. to GD(H4SO)-98, DTC P0341 CAMSHAFT POSITION SENSOR “A” CIRCUIT RANGE/PERFORMANCE (BANK 1 OR SINGLE SENSOR), Diagnostic Trouble Code (DTC) Detecting Criteria.>

TROUBLE SYMPTOM:

- Engine stalls
- Failure of engine to start

CAUTION:

After servicing or replacing faulty parts, perform Clear Memory Mode <Ref. to EN(H4SO)(diag)-54, OPERATION, Clear Memory Mode.>, and Inspection Mode <Ref. to EN(H4SO)(diag)-42, PROCEDURE, Inspection Mode.>.

WIRING DIAGRAM:

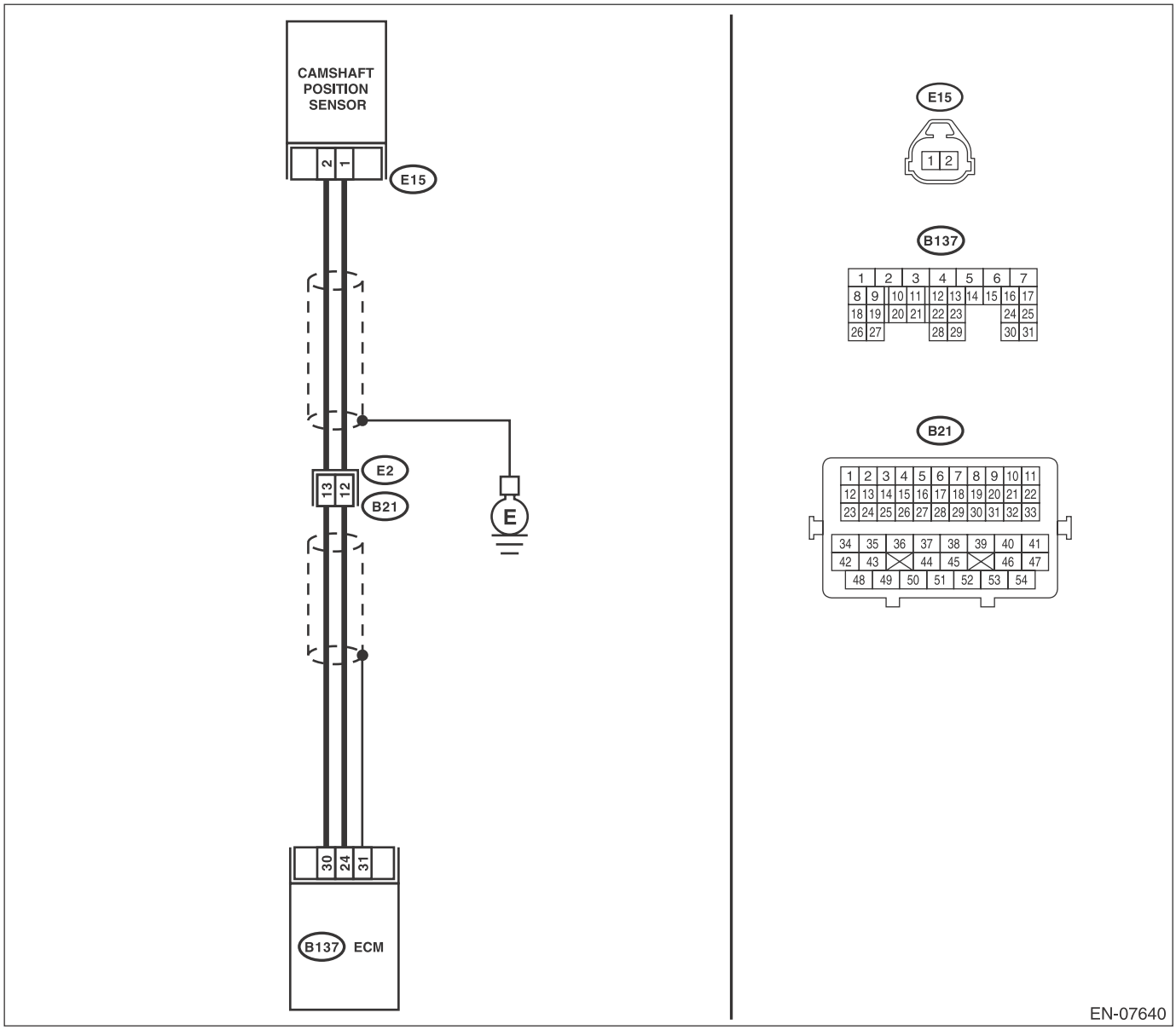

	Step	Check	Yes	No
1	**CHECK HARNESS BETWEEN ECM AND CAMSHAFT POSITION SENSOR CONNECTOR.** 1) Turn the ignition switch to OFF. 2) Disconnect the connector from ECM and camshaft position sensor. 3) Measure the resistance of harness between ECM and camshaft position sensor connector. ***Connector & terminal*** ***(B137) No. 24 — (E15) No. 1:*** ***(B137) No. 30 — (E15) No. 2:***	Is the resistance less than 1 Ω?	Go to step **2**.	Repair the harness and connector. NOTE: In this case, repair the following item: • Open circuit in harness between ECM and camshaft position sensor connector • Poor contact of ECM connector • Poor contact of coupling connector
2	**CHECK HARNESS BETWEEN ECM AND CAMSHAFT POSITION SENSOR CONNECTOR.** Measure the resistance between camshaft position sensor connector and engine ground. ***Connector & terminal*** ***(E15) No. 1 — Engine ground:***	Is the resistance 1 MΩ or more?	Go to step **3**.	Repair short circuit to ground in harness between ECM and camshaft position sensor connector. NOTE: The harness between both connectors are shielded. Remove the shield and repair the ground short circuit of the harness circuit.
3	**CHECK INSTALLATION CONDITION OF CAMSHAFT POSITION SENSOR.**	Is the camshaft position sensor installation bolt tightened securely?	Go to step **4**.	Tighten the camshaft position sensor installation bolt securely. <Ref. to FU(H4SO)-24, Camshaft Position Sensor.>
4	**CHECK CAMSHAFT POSITION SENSOR.** 1) Remove the camshaft position sensor. 2) Measure the resistance between terminals of camshaft position sensor connector. ***Terminals*** ***No. 1 — No. 2:***	Is the resistance between 1 and 4 kΩ?	Go to step **5**.	Replace the camshaft position sensor. <Ref. to FU(H4SO)-24, Camshaft Position Sensor.>
5	**CHECK CAM SPROCKET.** Remove the timing belt cover. <Ref. to ME(H4SO)-46, Timing Belt Cover.>	Are cam sprocket teeth cracked or damaged?	Replace the cam sprocket. <Ref. to ME(H4SO)-52, Cam Sprocket.>	Go to step **6**.
6	**CHECK INSTALLATION CONDITION OF TIMING BELT.** Turn the crankshaft using the ST, and align the alignment mark on the cam sprocket with the alignment mark on the timing belt cover LH. ST 499987500 CRANKSHAFT SOCKET	Is the timing belt dislocated from its proper position?	Repair the installation condition of timing belt. <Ref. to ME(H4SO)-47, Timing Belt.>	Replace the camshaft position sensor. <Ref. to FU(H4SO)-24, Camshaft Position Sensor.>

BE:DTC P0400 EXHAUST GAS RECIRCULATION FLOW

DTC DETECTING CONDITION:

- Detected when two consecutive driving cycles with fault occur.
- GENERAL DESCRIPTION <Ref. to GD(H4SO)-100, DTC P0400 EXHAUST GAS RECIRCULATION FLOW, Diagnostic Trouble Code (DTC) Detecting Criteria.>

TROUBLE SYMPTOM:

- Movement performance problem when engine is low speed.
- Improper idling
- Movement performance problem

CAUTION:
After servicing or replacing faulty parts, perform Clear Memory Mode <Ref. to EN(H4SO)(diag)-54, OPERATION, Clear Memory Mode.>, and Inspection Mode <Ref. to EN(H4SO)(diag)-42, PROCEDURE, Inspection Mode.>.

WIRING DIAGRAM:

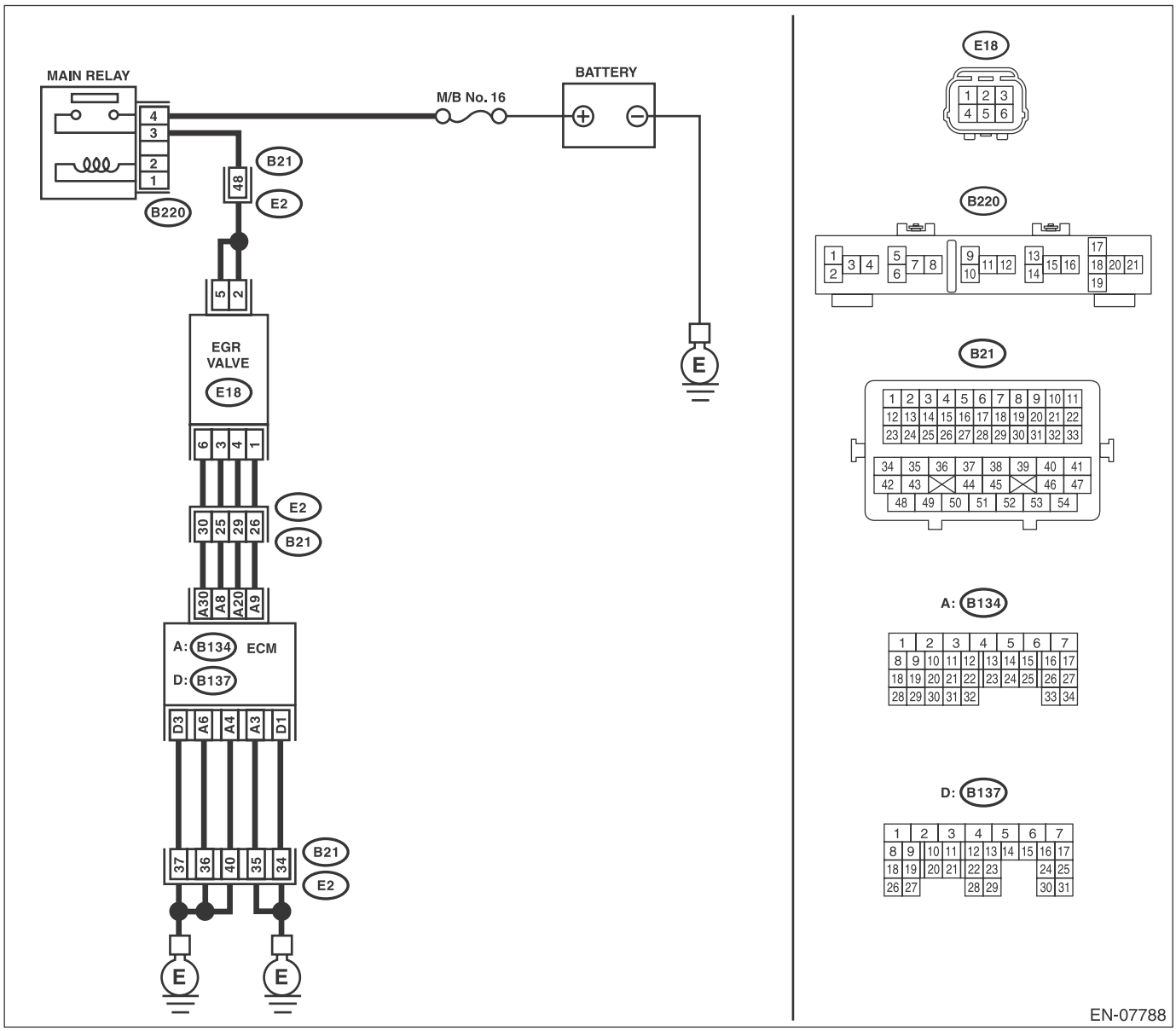

Step		Check	Yes	No
1	**CHECK CURRENT DATA.** 1) Start the engine. 2) Read data of intake manifold absolute pressure signal using Subaru Select Monitor or general scan tool. NOTE: • Subaru Select Monitor For detailed operation procedures, refer to "READ CURRENT DATA FOR ENGINE". <Ref. to EN(H4SO)(diag)-34, Subaru Select Monitor.> • General scan tool For detailed operation procedures, refer to the general scan tool operation manual.	Is the measured value 53.3 kPa (400 mmHg, 15.75 inHg) or more?	Make sure that the EGR valve, manifold absolute pressure sensor and throttle body are installed securely.	Go to step **2**.
2	**CHECK EGR VALVE.** Remove the EGR valve.	Are there any holes, clogged lines or foreign matters in the EGR system?	Repair the EGR system.	Replace the EGR valve. <Ref. to FU(H4SO)-31, EGR Valve.>

BF:DTC P0420 CATALYST SYSTEM EFFICIENCY BELOW THRESHOLD (BANK 1)

DTC DETECTING CONDITION:

- Detected when two consecutive driving cycles with fault occur.
- GENERAL DESCRIPTION <Ref. to GD(H4SO)-103, DTC P0420 CATALYST SYSTEM EFFICIENCY BELOW THRESHOLD (BANK 1), Diagnostic Trouble Code (DTC) Detecting Criteria.>

TROUBLE SYMPTOM:

- Engine stalls.
- Idle mixture is out of specifications.

CAUTION:

After servicing or replacing faulty parts, perform Clear Memory Mode <Ref. to EN(H4SO)(diag)-54, OPERATION, Clear Memory Mode.>, and Inspection Mode <Ref. to EN(H4SO)(diag)-42, PROCEDURE, Inspection Mode.>.

WIRING DIAGRAM:

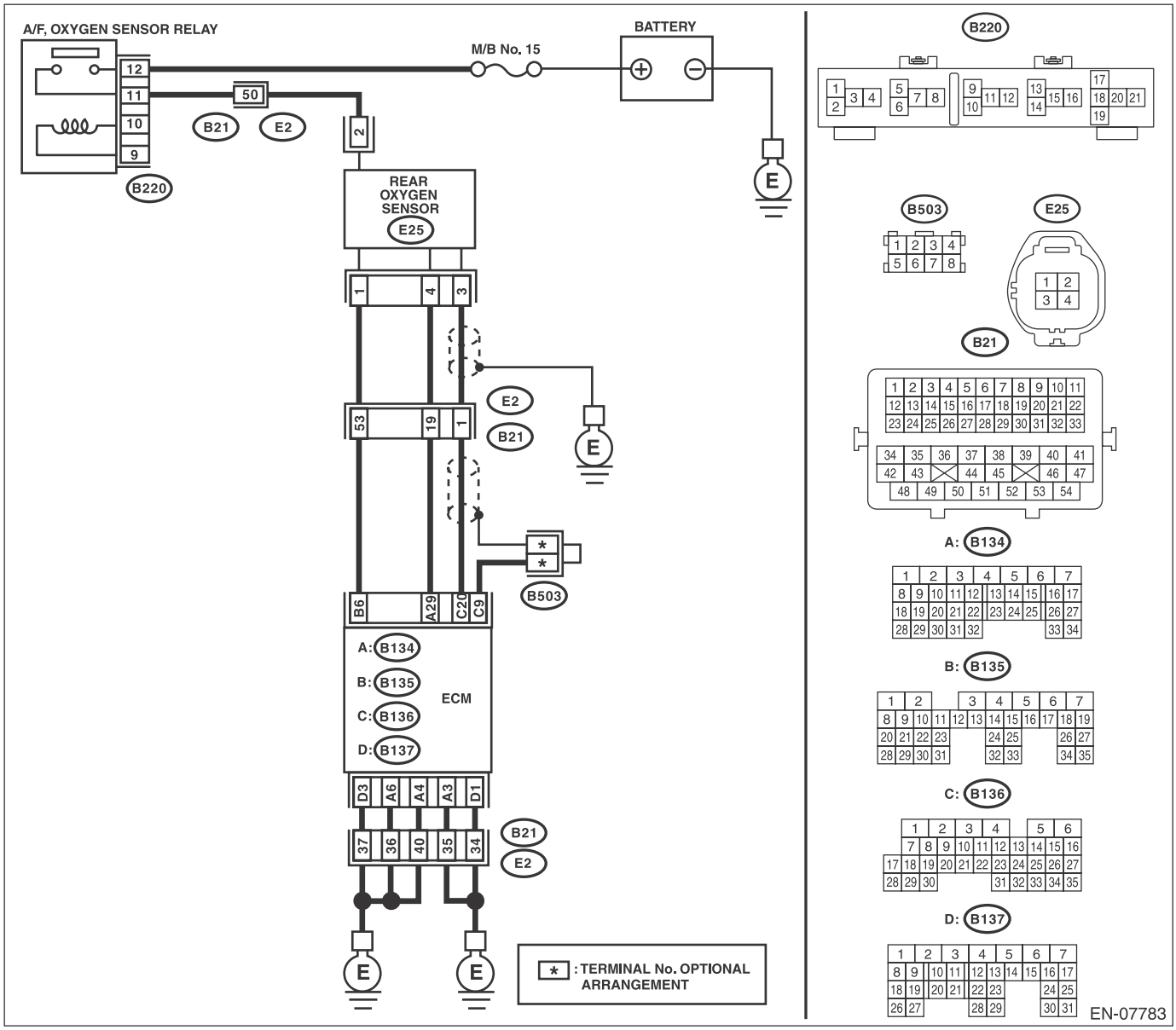

	Step	Check	Yes	No
1	**CHECK EXHAUST SYSTEM.** Check for gas leaks or air suction caused by loose or dislocated nuts and bolts, and open hole at exhaust pipes. NOTE: Check the following positions. • Between cylinder head and front exhaust pipe • Between front exhaust pipe and front catalytic converter • Between front catalytic converter and rear catalytic converter • Loose or improperly attached front oxygen (A/F) sensor or rear oxygen sensor	Is there any fault in exhaust system?	Repair or replace the exhaust system. <Ref. to EX(H4SO)-2, General Description.>	Go to step **2**.
2	**CHECK WAVEFORM DATA ON THE SUBARU SELECT MONITOR (WHILE DRIVING).** 1) Drive at a constant speed of 80 — 112 km/h (50 — 70 MPH). 2) After 5 minutes have elapsed in the condition of step 1), use the Subaru Select Monitor while still driving to read the waveform data. • At normal condition 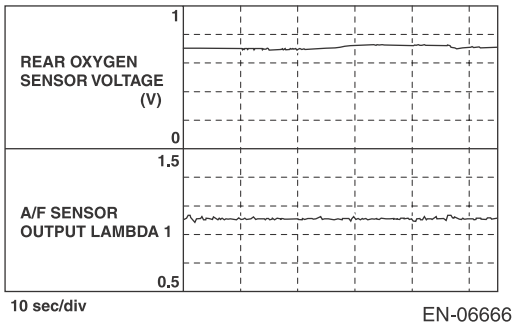 • At abnormal condition (numerous inversion) 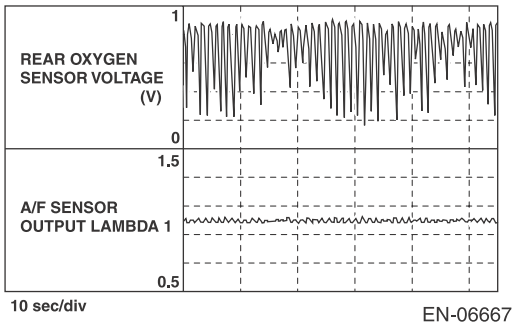	Is a normal waveform displayed?	Even if DTC is detected, the circuit has returned to a normal condition at this time. Reproduce the failure, and then perform the diagnosis again. NOTE: In this case, temporary poor contact of connector, temporary open or short circuit of harness may be the cause.	Go to step **3**.

	Step	Check	Yes	No
3	**CHECK WAVEFORM DATA ON THE SUBARU SELECT MONITOR (WHILE IDLING).** 1) Run the engine at idle. 2) In the state of step 1), read the waveform data using the Subaru Select Monitor. • At normal condition 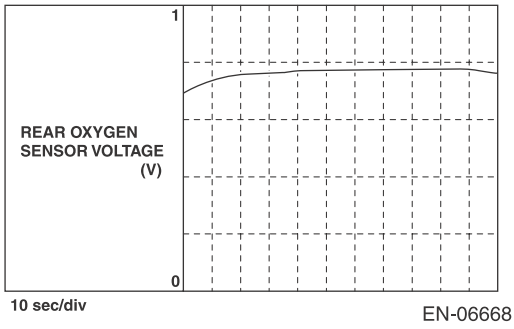 • At abnormal condition 1 (numerous inversion) 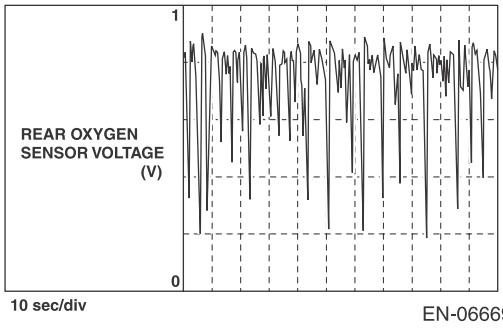 • At abnormal condition 2 (noise input) 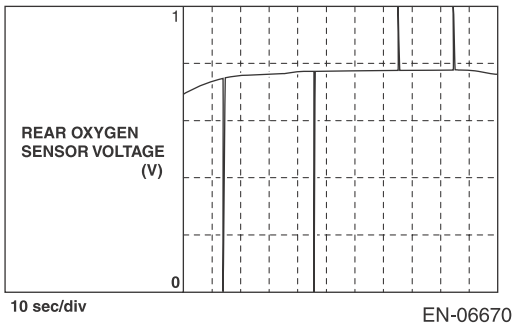	Is a normal waveform displayed?	Go to step **4**.	• The waveform is displayed at abnormal condition 1:Go to step **4**. • The waveform is displayed at abnormal condition 2:Go to step **5**.
4	**CHECK CATALYTIC CONVERTER.**	Is the catalytic converter damaged?	Replace the catalytic converter. <Ref. to EC(H4SO)-3, Front Catalytic Converter.>	Go to step **5**.
5	**CHECK REAR OXYGEN SENSOR CONNECTOR AND COUPLING CONNECTOR.**	Has water entered the connector?	Completely remove any water inside.	Go to step **6**.

	Step	Check	Yes	No
6	**CHECK HARNESS BETWEEN ECM AND REAR OXYGEN SENSOR CONNECTOR.** 1) Turn the ignition switch to OFF. 2) Disconnect the connector from ECM and rear oxygen sensor. 3) Measure the resistance of harness between ECM and rear oxygen sensor connector. ***Connector & terminal*** ***(B136) No. 20 — (E25) No. 3:*** ***(B134) No. 29 — (E25) No. 4:***	Is the resistance less than 1 Ω?	Go to step **7**.	Repair the harness and connector. NOTE: In this case, repair the following item: • Open circuit in harness between ECM and rear oxygen sensor connector • Poor contact of coupling connector
7	**CHECK HARNESS BETWEEN ECM AND REAR OXYGEN SENSOR CONNECTOR.** 1) Connect the connector to ECM. 2) Turn the ignition switch to ON. 3) Measure the voltage between rear oxygen sensor connector and chassis ground. ***Connector & terminal*** ***(E25) No. 3 (+) — Chassis ground (–):***	Is the voltage 0.2 — 0.5 V?	Go to step **8**.	Repair the harness and connector. NOTE: Repair the following locations. • Open circuit in harness between ECM and rear oxygen sensor connector • Poor contact of ECM and rear oxygen sensor • Poor contact of ECM connector
8	**CHECK REAR OXYGEN SENSOR SHIELD.** 1) Turn the ignition switch to OFF. 2) Expose the rear oxygen sensor connector body side harness sensor shield. 3) Measure the resistance between sensor shield and chassis ground.	Is the resistance less than 1 Ω?	Replace the rear oxygen sensor. <Ref. to FU(H4SO)-37, Rear Oxygen Sensor.>	Repair the open circuit of rear oxygen sensor harness.

BG:DTC P0442 EVAPORATIVE EMISSION CONTROL SYSTEM LEAK DETECTED (SMALL LEAK)

DTC DETECTING CONDITION:

- Detected when two consecutive driving cycles with fault occur.
- GENERAL DESCRIPTION <Ref. to GD(H4SO)-105, DTC P0442 EVAPORATIVE EMISSION CONTROL SYSTEM LEAK DETECTED (SMALL LEAK), Diagnostic Trouble Code (DTC) Detecting Criteria.>

TROUBLE SYMPTOM:

- Fuel odor
- There is a hole of more than 1.0 mm (0.04 in) dia. in evaporation system or fuel tank.

CAUTION:

After servicing or replacing faulty parts, perform Clear Memory Mode <Ref. to EN(H4SO)(diag)-54, OPERATION, Clear Memory Mode.>, and Inspection Mode <Ref. to EN(H4SO)(diag)-42, PROCEDURE, Inspection Mode.>.

WIRING DIAGRAM:

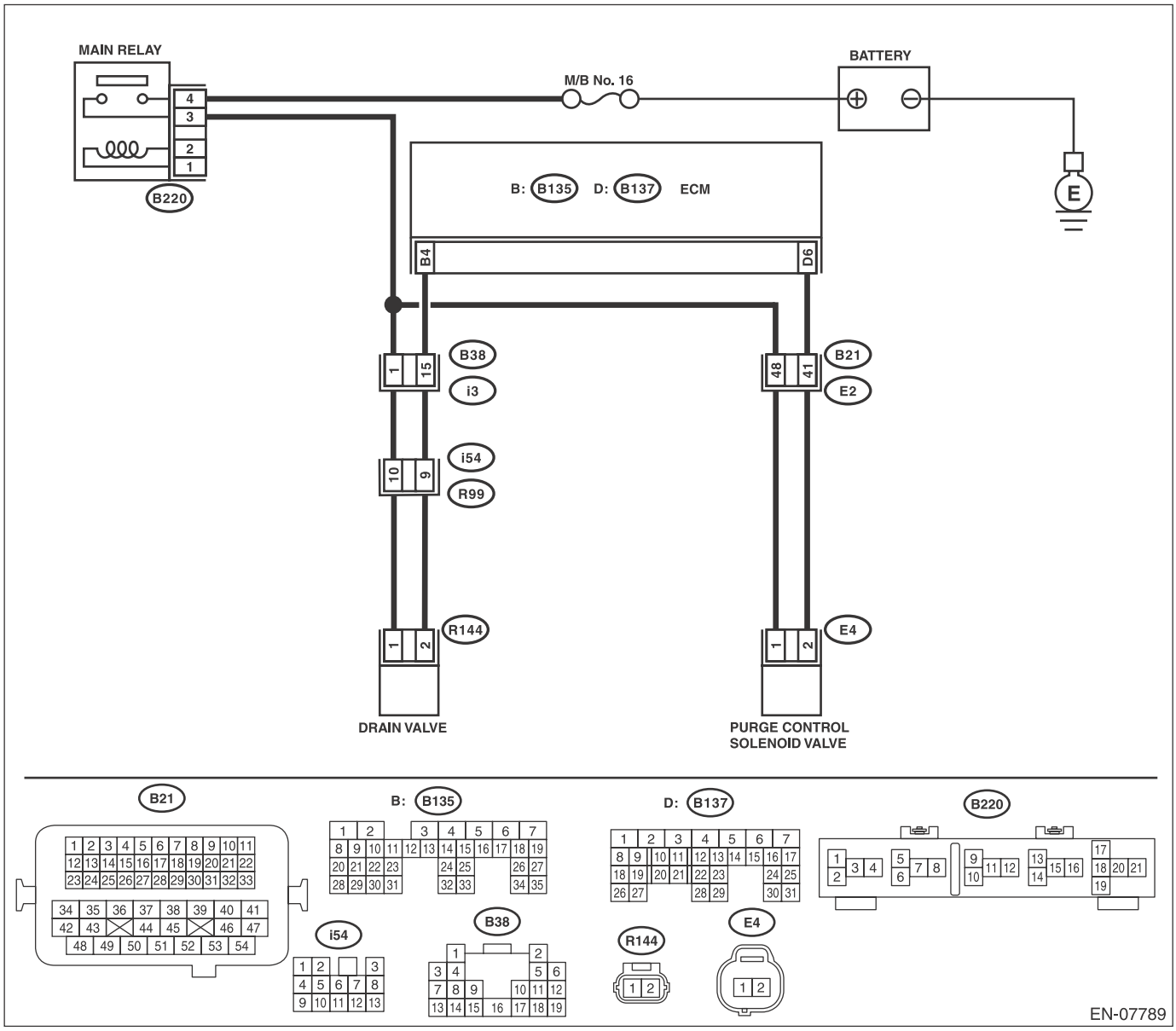

	Step	Check	Yes	No
1	**CHECK FUEL FILLER CAP.** 1) Turn the ignition switch to OFF. 2) Check the fuel filler cap. NOTE: The DTC is stored in memory if fuel filler cap is or was loose or if the cap chain has caught while tightening.	Is the fuel filler cap tightened securely?	Go to step **2**.	Tighten fuel filler cap securely.
2	**CHECK FUEL FILLER CAP.**	Is the fuel filler cap genuine?	Go to step **3**.	Replace with a genuine fuel filler cap.
3	**CHECK FUEL FILLER PIPE GASKET.**	Is there any damage to the seal between fuel filler cap and fuel filler pipe?	Repair or replace the fuel filler cap and fuel filler pipe. <Ref. to FU(H4SO)-55, Fuel Filler Pipe.>	Go to step **4**.
4	**CHECK DRAIN VALVE.** 1) Install the delivery (test) mode fuse. 2) Turn the ignition switch to ON. 3) Operate the drain valve using the Subaru Select Monitor. NOTE: Drain valve operation can be executed using Subaru Select Monitor. For detailed procedures, refer to "SYSTEM OPERATION CHECK MODE". <Ref. to EN(H4SO)(diag)-55, System Operation Check Mode.>	Does the drain valve operate?	Go to step **5**.	Replace the drain valve. <Ref. to EC(H4SO)-18, Drain Valve.>
5	**CHECK PURGE CONTROL SOLENOID VALVE.** Operate the purge control solenoid valve using the Subaru Select Monitor. NOTE: Purge control solenoid valve operation can be executed using Subaru Select Monitor. For detailed procedures, refer to "SYSTEM OPERATION CHECK MODE". <Ref. to EN(H4SO)(diag)-55, System Operation Check Mode.>	Does the purge control solenoid valve operate?	Go to step **6**.	Replace the purge control solenoid valve. <Ref. to EC(H4SO)-9, Purge Control Solenoid Valve.>
6	**CHECK EVAPORATIVE EMISSION CONTROL SYSTEM LINE.** 1) Turn the ignition switch to OFF. 2) Check the delivery (test) mode fuse is removed.	Is there any hole of more than 1.0 mm (0.04 in) dia. on evaporation line?	Repair or replace the evaporation line. <Ref. to FU(H4SO)-66, Fuel Delivery and Evaporation Lines.>	Go to step **7**.
7	**CHECK CANISTER.**	Is the canister damaged or is there a hole of more than 1.0 mm (0.04 in) dia. in it?	Repair or replace the canister. <Ref. to EC(H4SO)-5, Canister.>	Go to step **8**.
8	**CHECK FUEL TANK.** Remove the fuel tank. <Ref. to FU(H4SO)-48, Fuel Tank.>	Is the fuel tank damaged or is there any hole of more than 1.0 mm (0.04 in) dia. in it?	Repair or replace the fuel tank. <Ref. to FU(H4SO)-48, Fuel Tank.>	Go to step **9**.
9	**CHECK ANY OTHER MECHANICAL TROUBLE IN EVAPORATIVE EMISSION CONTROL SYSTEM.**	Is there any hole of more than 1.0 mm (0.04 in) dia., crack, clogging, or disconnections, bend, misconnection of hoses or pipes in evaporative emission control system?	Repair or replace the hoses or pipes.	Repair the poor contact of ECM connector.

BH:DTC P0447 EVAPORATIVE EMISSION CONTROL SYSTEM VENT CONTROL CIRCUIT OPEN

DTC DETECTING CONDITION:

- Immediately at fault recognition
- GENERAL DESCRIPTION <Ref. to GD(H4SO)-118, DTC P0447 EVAPORATIVE EMISSION CONTROL SYSTEM VENT CONTROL CIRCUIT OPEN, Diagnostic Trouble Code (DTC) Detecting Criteria.>

CAUTION:

After servicing or replacing faulty parts, perform Clear Memory Mode <Ref. to EN(H4SO)(diag)-54, OPERATION, Clear Memory Mode.>, and Inspection Mode <Ref. to EN(H4SO)(diag)-42, PROCEDURE, Inspection Mode.>.

WIRING DIAGRAM:

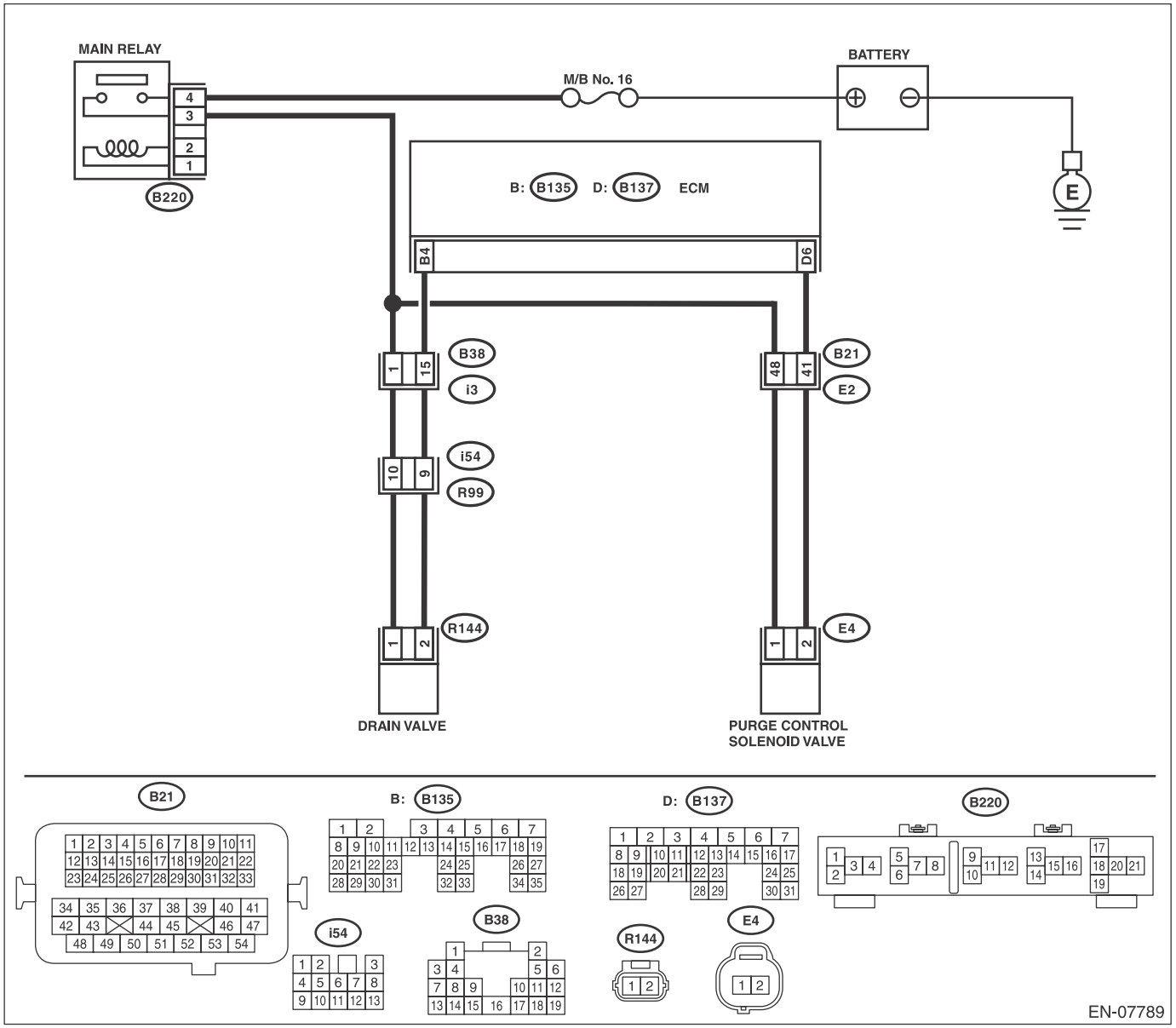

	Step	Check	Yes	No
1	**CHECK OUTPUT SIGNAL OF ECM.** 1) Turn the ignition switch to ON. 2) Measure the voltage between ECM and chassis ground. ***Connector & terminal*** ***(B135) No. 4 (+) — Chassis ground (–):***	Is the voltage 10 V or more?	Go to step **2**.	Go to step **3**.
2	**CHECK FOR POOR CONTACT.** Check for poor contact of ECM connector.	Is there poor contact of ECM connector?	Repair the poor contact of ECM connector.	Even if DTC is detected, the circuit has returned to a normal condition at this time. Reproduce the failure, and then perform the diagnosis again. NOTE: In this case, temporary open or short circuit of harness or temporary poor contact of connector may be the cause.
3	**CHECK POWER SUPPLY TO DRAIN VALVE.** Measure the voltage between drain valve and chassis ground. ***Connector & terminal*** ***(R144) No. 1 (+) — Chassis ground (–):***	Is the voltage 10 V or more?	Go to step **4**.	Repair the power supply circuit.
4	**CHECK HARNESS BETWEEN ECM AND DRAIN VALVE CONNECTOR.** 1) Turn the ignition switch to OFF. 2) Disconnect the connectors from the ECM and drain valve. 3) Measure the resistance between the drain valve connector and chassis ground. ***Connector & terminal*** ***(R144) No. 2 — Chassis ground:***	Is the resistance 1 MΩ or more?	Go to step **5**.	Repair the ground short circuit of harness between ECM and drain valve connector.
5	**CHECK HARNESS BETWEEN ECM AND DRAIN VALVE CONNECTOR.** Measure the resistance of harness between ECM and drain valve connector. ***Connector & terminal*** ***(B135) No. 4 — (R144) No. 2:***	Is the resistance less than 1 Ω?	Go to step **6**.	Repair the harness and connector. NOTE: In this case, repair the following item: • Open circuit of harness between ECM and drain valve connector • Poor contact of coupling connector
6	**CHECK DRAIN VALVE.** Measure the resistance between drain valve terminals. ***Terminals*** ***No. 1 — No. 2:***	Is the resistance 10 — 100 Ω?	Repair the poor contact of drain valve connector.	Replace the drain valve. <Ref. to EC(H4SO)-18, Drain Valve.>

BI: DTC P0448 EVAPORATIVE EMISSION CONTROL SYSTEM VENT CONTROL CIRCUIT SHORTED

DTC DETECTING CONDITION:

- Immediately at fault recognition
- GENERAL DESCRIPTION <Ref. to GD(H4SO)-120, DTC P0448 EVAPORATIVE EMISSION CONTROL SYSTEM VENT CONTROL CIRCUIT SHORTED, Diagnostic Trouble Code (DTC) Detecting Criteria.>

CAUTION:

After servicing or replacing faulty parts, perform Clear Memory Mode <Ref. to EN(H4SO)(diag)-54, OPERATION, Clear Memory Mode.>, and Inspection Mode <Ref. to EN(H4SO)(diag)-42, PROCEDURE, Inspection Mode.>.

WIRING DIAGRAM:

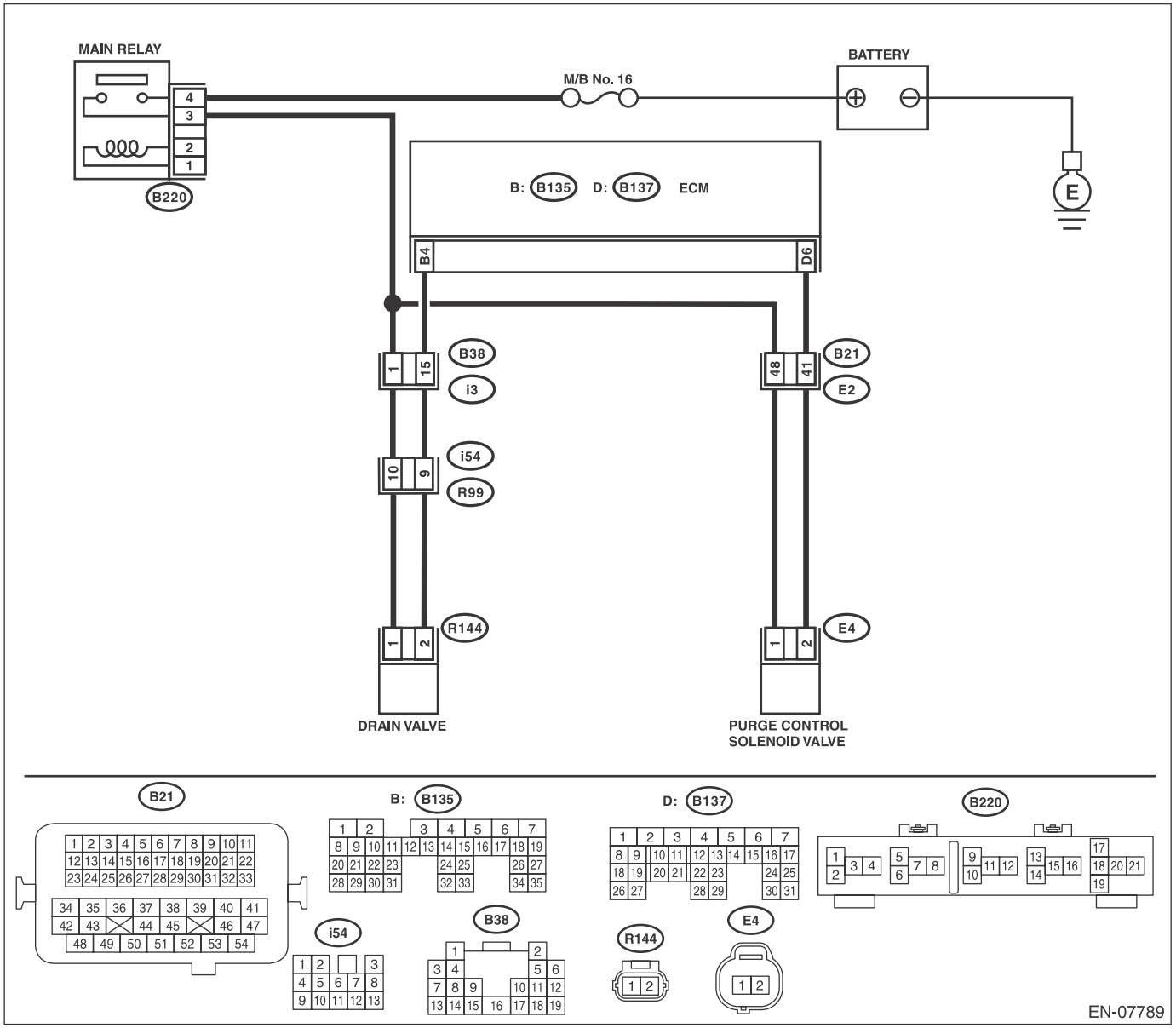

	Step	Check	Yes	No
1	**CHECK HARNESS BETWEEN ECM AND DRAIN VALVE CONNECTOR.** 1) Turn the ignition switch to OFF. 2) Disconnect the connectors from the ECM and drain valve. 3) Turn the ignition switch to ON. 4) Measure the voltage between ECM and chassis ground. ***Connector & terminal*** ***(B135) No. 4 (+) — Chassis ground (–):***	Is the voltage 10 V or more?	Repair the short circuit to power in the harness between ECM and drain valve connector.	Go to step **2**.
2	**CHECK DRAIN VALVE.** 1) Turn the ignition switch to OFF. 2) Measure the resistance between drain valve terminals. ***Terminals*** ***No. 1 — No. 2:***	Is the resistance less than 1 Ω?	Replace the drain valve. <Ref. to EC(H4SO)-18, Drain Valve.>	Repair the poor contact of ECM connector.

BJ:DTC P0451 EVAPORATIVE EMISSION CONTROL SYSTEM PRESSURE SENSOR

DTC DETECTING CONDITION:

- Detected when two consecutive driving cycles with fault occur.
- GENERAL DESCRIPTION <Ref. to GD(H4SO)-122, DTC P0451 EVAPORATIVE EMISSION CONTROL SYSTEM PRESSURE SENSOR, Diagnostic Trouble Code (DTC) Detecting Criteria.>

CAUTION:

After servicing or replacing faulty parts, perform Clear Memory Mode <Ref. to EN(H4SO)(diag)-54, OPERATION, Clear Memory Mode.>, and Inspection Mode <Ref. to EN(H4SO)(diag)-42, PROCEDURE, Inspection Mode.>.

WIRING DIAGRAM:

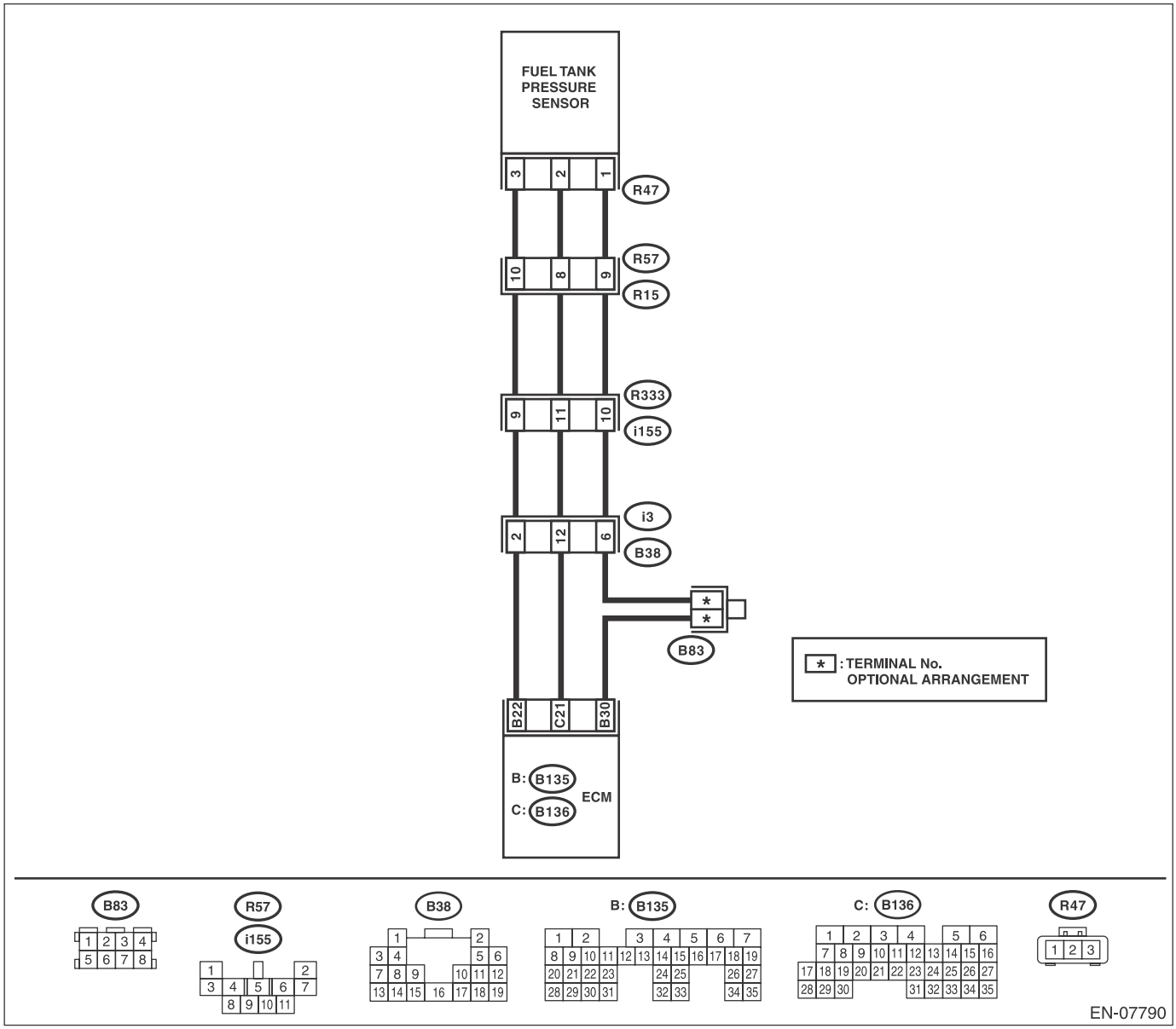

Step		Check	Yes	No
1	**CHECK FUEL FILLER CAP.** 1) Turn the ignition switch to OFF. 2) Open the fuel flap.	Is the fuel filler cap tightened securely?	Go to step **2**.	Tighten fuel filler cap securely.

Step		Check	Yes	No
2	**CHECK PRESSURE VACUUM LINE.** NOTE: Check the following items. • Disconnection, leakage and clogging of the vacuum hoses and pipes between fuel tank pressure sensor and fuel tank • Disconnection, leakage and clogging of air ventilation hoses and pipes between fuel filler pipe and fuel tank	Is there any fault in pressure/vacuum line?	Repair or replace the hoses and pipes.	Replace the fuel tank pressure sensor. <Ref. to EC(H4SO)-15, Fuel Tank Pressure Sensor.>

BK:DTC P0452 EVAPORATIVE EMISSION CONTROL SYSTEM PRESSURE SENSOR LOW INPUT

DTC DETECTING CONDITION:

- Immediately at fault recognition
- GENERAL DESCRIPTION <Ref. to GD(H4SO)-124, DTC P0452 EVAPORATIVE EMISSION CONTROL SYSTEM PRESSURE SENSOR LOW INPUT, Diagnostic Trouble Code (DTC) Detecting Criteria.>

CAUTION:
After servicing or replacing faulty parts, perform Clear Memory Mode <Ref. to EN(H4SO)(diag)-54, OPERATION, Clear Memory Mode.>, and Inspection Mode <Ref. to EN(H4SO)(diag)-42, PROCEDURE, Inspection Mode.>.

WIRING DIAGRAM:

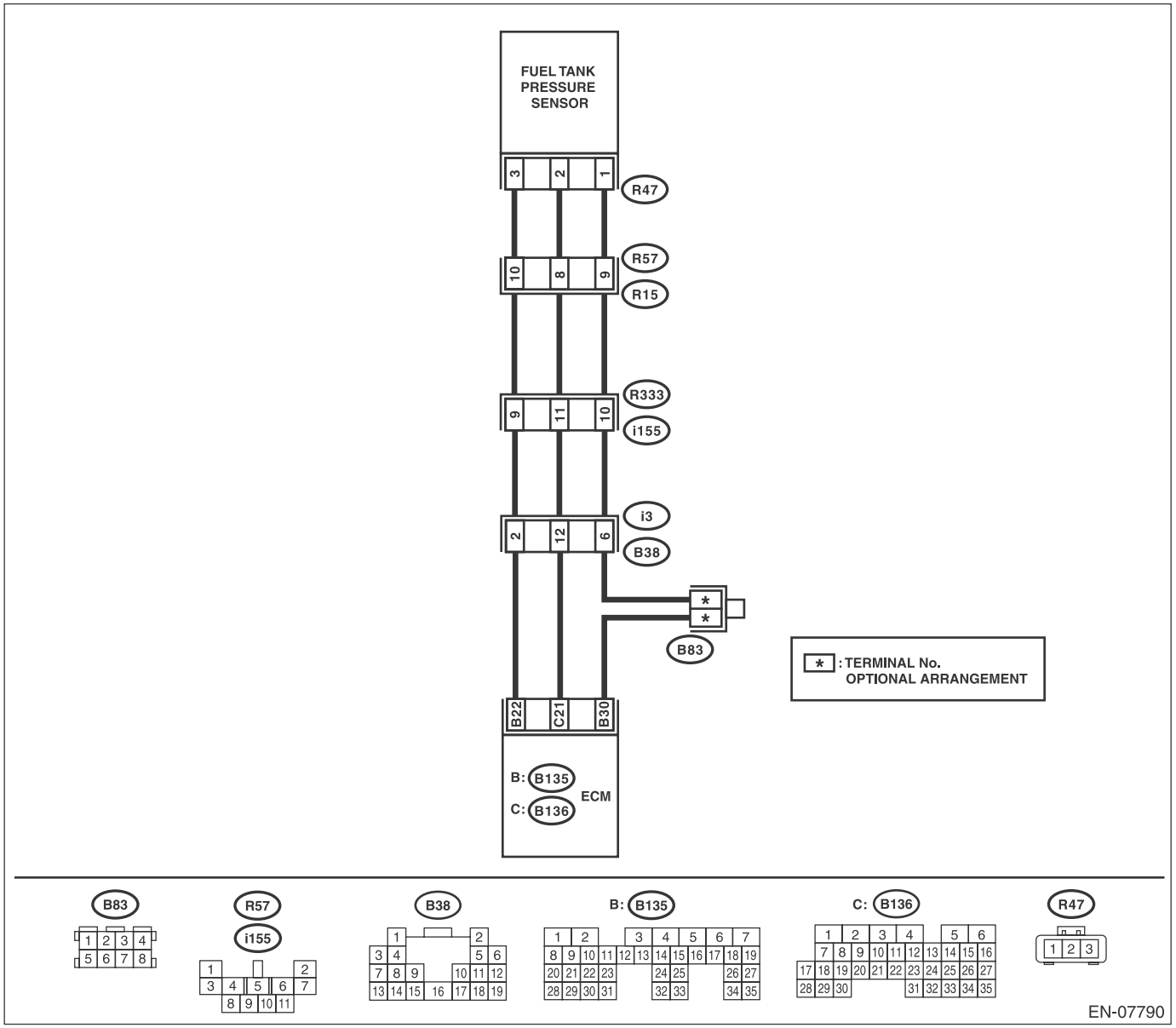

	Step	Check	Yes	No
1	**CHECK CURRENT DATA.** 1) Turn the ignition switch to ON. 2) Read the data of fuel tank pressure sensor signal using the Subaru Select Monitor or general scan tool. NOTE: • Subaru Select Monitor For detailed operation procedures, refer to "READ CURRENT DATA FOR ENGINE". <Ref. to EN(H4SO)(diag)-34, Subaru Select Monitor.> • General scan tool For detailed operation procedures, refer to the general scan tool operation manual.	Is the measured value less than –7.41 kPa (–55.6 mmHg, –2.19 inHg)?	Go to step **2**.	Even if DTC is detected, the circuit has returned to a normal condition at this time. Reproduce the failure, and then perform the diagnosis again. NOTE: In this case, temporary poor contact of connector, temporary open or short circuit of harness may be the cause.
2	**CHECK FUEL TANK PRESSURE SENSOR POWER SUPPLY.** 1) Turn the ignition switch to OFF. 2) Disconnect the connector from the fuel tank pressure sensor. 3) Turn the ignition switch to ON. 4) Measure the voltage between the fuel tank pressure sensor connector and chassis ground. ***Connector & terminal*** ***(R47) No. 3 (+) — Chassis ground (–):***	Is the voltage 4.5 V or more?	Go to step **3**.	Repair the harness and connector. NOTE: In this case, repair the following item: • Open circuit of harness between ECM and fuel tank pressure sensor connector • Poor contact of ECM connector • Poor contact of coupling connector
3	**CHECK HARNESS BETWEEN ECM AND FUEL TANK PRESSURE SENSOR CONNECTOR.** 1) Turn the ignition switch to OFF. 2) Disconnect the connector from ECM. 3) Measure the resistance of harness between the ECM and fuel tank pressure sensor connector. ***Connector & terminal*** ***(B136) No. 21 — (R47) No. 2:***	Is the resistance less than 1 Ω?	Go to step **4**.	Repair the harness and connector. NOTE: In this case, repair the following item: • Open circuit of harness between ECM and fuel tank pressure sensor connector • Poor contact of coupling connector
4	**CHECK HARNESS BETWEEN ECM AND FUEL TANK PRESSURE SENSOR CONNECTOR.** Measure the resistance between ECM and chassis ground. ***Connector & terminal*** ***(B136) No. 21 — Chassis ground:***	Is the resistance 1 MΩ or more?	Go to step **5**.	Repair the ground short circuit of harness between ECM and fuel tank pressure sensor connector.
5	**CHECK FOR POOR CONTACT.** Check for poor contact between the ECM and fuel tank pressure sensor connector.	Is there poor contact of the ECM or fuel tank pressure sensor connector?	Repair the poor contact of the ECM or fuel tank pressure sensor connector.	Replace the fuel tank pressure sensor. <Ref. to EC(H4SO)-15, Fuel Tank Pressure Sensor.>

BL:DTC P0453 EVAPORATIVE EMISSION CONTROL SYSTEM PRESSURE SENSOR HIGH INPUT

DTC DETECTING CONDITION:

- Immediately at fault recognition
- GENERAL DESCRIPTION <Ref. to GD(H4SO)-126, DTC P0453 EVAPORATIVE EMISSION CONTROL SYSTEM PRESSURE SENSOR HIGH INPUT, Diagnostic Trouble Code (DTC) Detecting Criteria.>

CAUTION:
After servicing or replacing faulty parts, perform Clear Memory Mode <Ref. to EN(H4SO)(diag)-54, OPERATION, Clear Memory Mode.>, and Inspection Mode <Ref. to EN(H4SO)(diag)-42, PROCEDURE, Inspection Mode.>.

WIRING DIAGRAM:

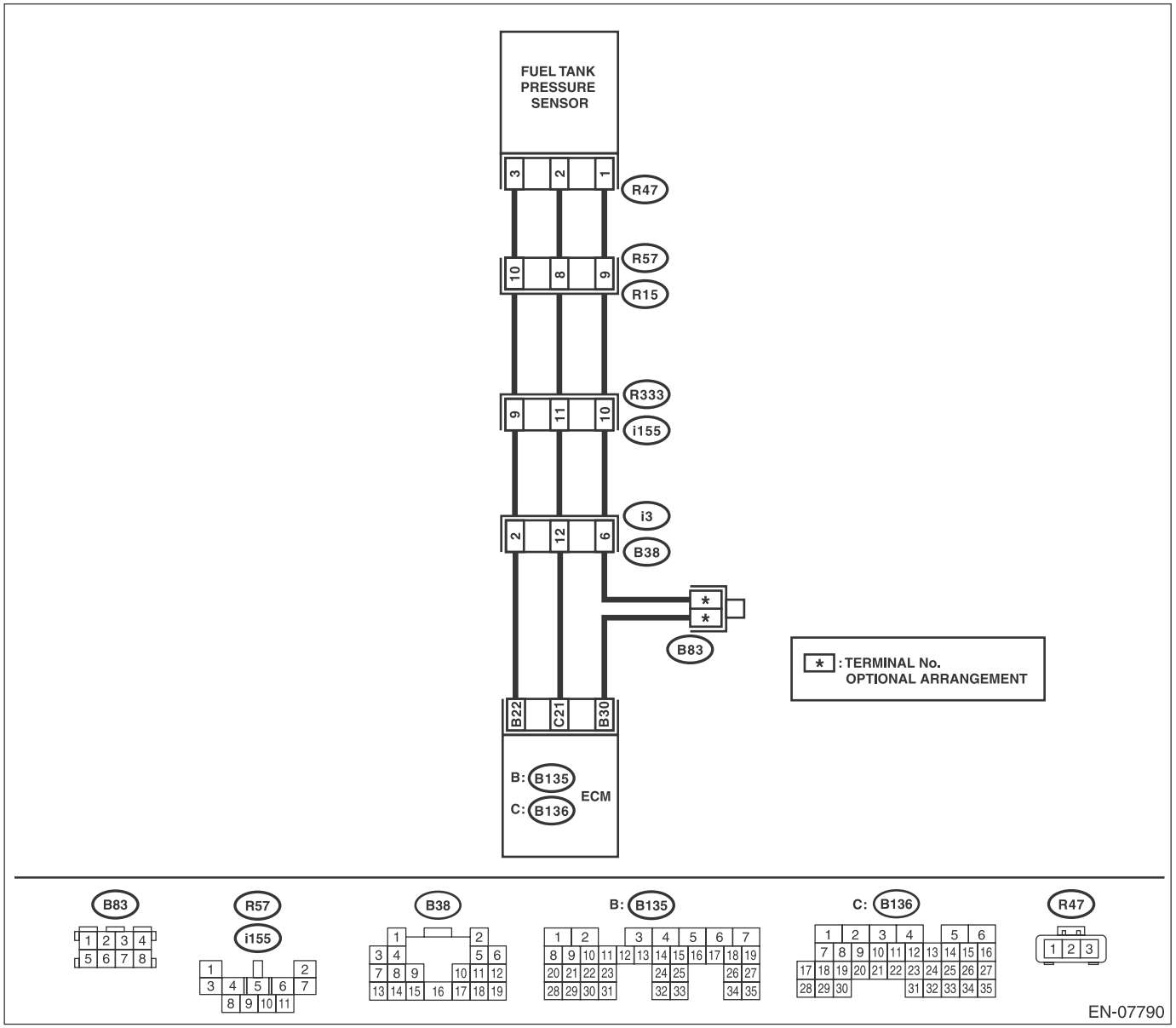

	Step	Check	Yes	No
1	**CHECK CURRENT DATA.** 1) Turn the ignition switch to ON. 2) Read the data of fuel tank pressure sensor signal using the Subaru Select Monitor or general scan tool. NOTE: • Subaru Select Monitor For detailed operation procedures, refer to "READ CURRENT DATA FOR ENGINE". <Ref. to EN(H4SO)(diag)-34, Subaru Select Monitor.> • General scan tool For detailed operation procedures, refer to the general scan tool operation manual.	Is the measured value 7.95 kPa (59.6 mmHg, 2.35 inHg) or more?	Go to step **2**.	Even if DTC is detected, the circuit has returned to a normal condition at this time. Reproduce the failure, and then perform the diagnosis again. NOTE: In this case, temporary poor contact of connector, temporary open or short circuit of harness may be the cause.
2	**CHECK HARNESS BETWEEN ECM AND FUEL TANK PRESSURE SENSOR CONNECTOR.** 1) Turn the ignition switch to OFF. 2) Disconnect the connector from the fuel tank pressure sensor. 3) Turn the ignition switch to ON. 4) Read the data of fuel tank pressure sensor signal using the Subaru Select Monitor or general scan tool. NOTE: • Subaru Select Monitor For detailed operation procedures, refer to "READ CURRENT DATA FOR ENGINE". <Ref. to EN(H4SO)(diag)-34, Subaru Select Monitor.> • General scan tool For detailed operation procedures, refer to the general scan tool operation manual.	Is the measured value 7.95 kPa (59.6 mmHg, 2.35 inHg) or more?	Repair the short circuit to power in the harness between ECM and fuel tank pressure sensor connector.	Go to step **3**.
3	**CHECK HARNESS BETWEEN ECM AND FUEL TANK PRESSURE SENSOR CONNECTOR.** 1) Turn the ignition switch to OFF. 2) Measure the resistance of harness between fuel tank pressure sensor connector and engine ground. ***Connector & terminal*** ***(R47) No. 1 — Engine ground:***	Is the resistance less than 5 Ω?	Go to step **4**.	Repair the harness and connector. NOTE: In this case, repair the following item: • Open circuit of harness between ECM and fuel tank pressure sensor connector • Poor contact of ECM connector • Poor contact of coupling connector • Poor contact of joint connector
4	**CHECK FOR POOR CONTACT.** Check for poor contact of the fuel tank pressure sensor connector.	Is there poor contact of fuel tank pressure sensor connector?	Repair the poor contact of fuel tank pressure sensor connector.	Replace the fuel tank pressure sensor. <Ref. to EC(H4SO)-15, Fuel Tank Pressure Sensor.>

BM:DTC P0456 EVAPORATIVE EMISSION CONTROL SYSTEM LEAK DETECTED (VERY SMALL LEAK)

DTC DETECTING CONDITION:

- Detected when two consecutive driving cycles with fault occur.
- GENERAL DESCRIPTION <Ref. to GD(H4SO)-127, DTC P0456 EVAPORATIVE EMISSION CONTROL SYSTEM LEAK DETECTED (VERY SMALL LEAK), Diagnostic Trouble Code (DTC) Detecting Criteria.>

TROUBLE SYMPTOM:

- Fuel odor
- There is a hole of more than 0.5 mm (0.020 in) dia. in evaporation system or fuel tank.

CAUTION:

After servicing or replacing faulty parts, perform Clear Memory Mode <Ref. to EN(H4SO)(diag)-54, OPERATION, Clear Memory Mode.>, and Inspection Mode <Ref. to EN(H4SO)(diag)-42, PROCEDURE, Inspection Mode.>.

WIRING DIAGRAM:

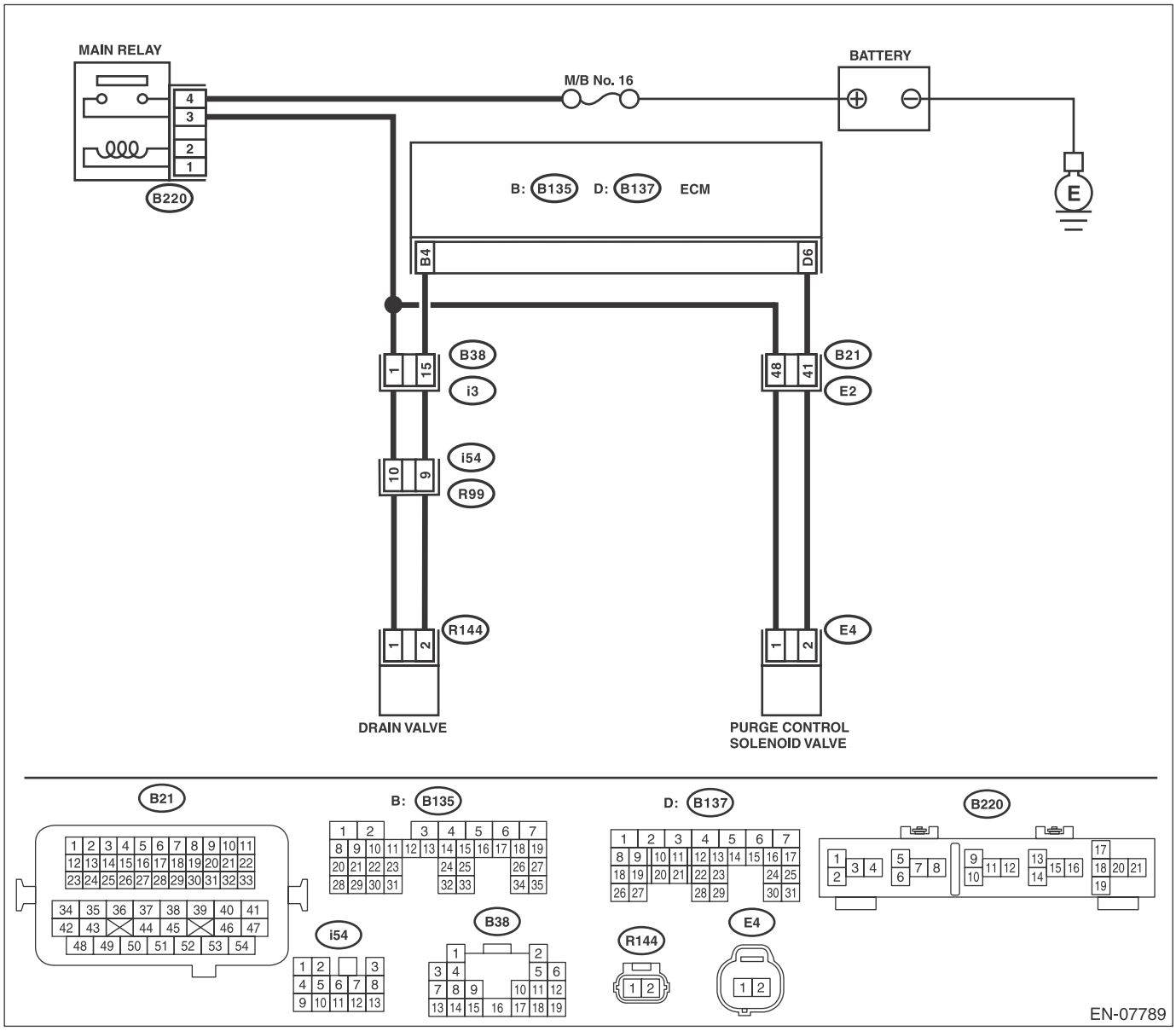

	Step	Check	Yes	No
1	**CHECK FUEL FILLER CAP.** 1) Turn the ignition switch to OFF. 2) Check the fuel filler cap. NOTE: The DTC is stored in memory if fuel filler cap is or was loose or if the cap chain has caught while tightening.	Is the fuel filler cap tightened securely?	Go to step **2**.	Tighten fuel filler cap securely.
2	**CHECK FUEL FILLER CAP.**	Is the fuel filler cap genuine?	Go to step **3**.	Replace with a genuine fuel filler cap.
3	**CHECK FUEL FILLER PIPE GASKET.**	Is there any damage to the seal between fuel filler cap and fuel filler pipe?	Repair or replace the fuel filler cap and fuel filler pipe. <Ref. to FU(H4SO)-55, Fuel Filler Pipe.>	Go to step **4**.
4	**CHECK DRAIN VALVE.** 1) Install the delivery (test) mode fuse. 2) Turn the ignition switch to ON. 3) Operate the drain valve using the Subaru Select Monitor. NOTE: Drain valve can be operated using the Subaru Select Monitor. For detailed procedures, refer to "SYSTEM OPERATION CHECK MODE". <Ref. to EN(H4SO)(diag)-55, System Operation Check Mode.>	Does the drain valve operate?	Go to step **5**.	Replace the drain valve. <Ref. to EC(H4SO)-18, Drain Valve.>
5	**CHECK PURGE CONTROL SOLENOID VALVE.** Operate the purge control solenoid valve using the Subaru Select Monitor. NOTE: Purge control solenoid valve operation can be executed using Subaru Select Monitor. For detailed procedures, refer to "SYSTEM OPERATION CHECK MODE". <Ref. to EN(H4SO)(diag)-55, System Operation Check Mode.>	Does the purge control solenoid valve operate?	Go to step **6**.	Replace the purge control solenoid valve. <Ref. to EC(H4SO)-9, Purge Control Solenoid Valve.>
6	**CHECK EVAPORATIVE EMISSION CONTROL SYSTEM LINE.** 1) Turn the ignition switch to OFF. 2) Check the delivery (test) mode fuse is removed.	Is there any hole of more than 0.5 mm (0.020 in) dia. on evaporation line?	Repair or replace the evaporation line. <Ref. to FU(H4SO)-66, Fuel Delivery and Evaporation Lines.>	Go to step **7**.
7	**CHECK CANISTER.**	Is the canister damaged or is there a hole of more than 0.5 mm (0.020 in) dia. in it?	Repair or replace the canister. <Ref. to EC(H4SO)-5, Canister.>	Go to step **8**.
8	**CHECK FUEL TANK.** Remove the fuel tank. <Ref. to FU(H4SO)-48, Fuel Tank.>	Is the fuel tank damaged or is there any hole of more than 0.5 mm (0.020 in) dia. in it?	Repair or replace the fuel tank. <Ref. to FU(H4SO)-48, Fuel Tank.>	Go to step **9**.
9	**CHECK ANY OTHER MECHANICAL TROUBLE IN EVAPORATIVE EMISSION CONTROL SYSTEM.**	Is there any hole of more than 0.5 mm (0.020 in) dia., crack, clogging, or disconnections, bend, misconnection of hoses or pipes in evaporative emission control system?	Repair or replace the hoses or pipes.	Repair the poor contact of ECM connector.

BN:DTC P0457 EVAPORATIVE EMISSION CONTROL SYSTEM LEAK DETECTED (FUEL CAP LOOSE/OFF)

DTC DETECTING CONDITION:

- Detected when two consecutive driving cycles with fault occur.
- GENERAL DESCRIPTION <Ref. to GD(H4SO)-127, DTC P0457 EVAPORATIVE EMISSION CONTROL SYSTEM LEAK DETECTED (FUEL CAP LOOSE/OFF), Diagnostic Trouble Code (DTC) Detecting Criteria.>

TROUBLE SYMPTOM:

- Fuel odor
- Fuel filler cap loose or lost

CAUTION:

After servicing or replacing faulty parts, perform Clear Memory Mode <Ref. to EN(H4SO)(diag)-54, OPERATION, Clear Memory Mode.>, and Inspection Mode <Ref. to EN(H4SO)(diag)-42, PROCEDURE, Inspection Mode.>.

WIRING DIAGRAM:

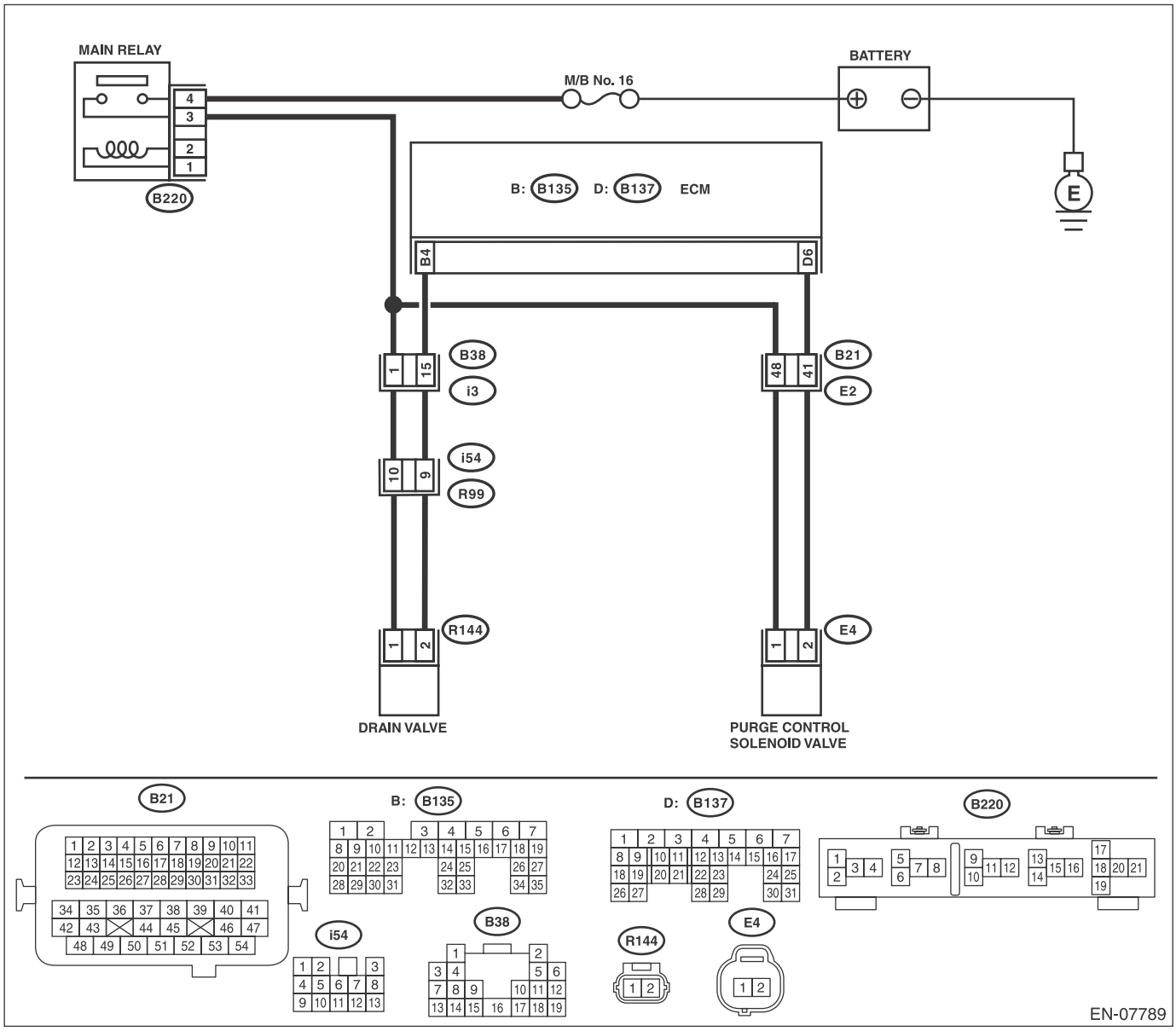

	Step	Check	Yes	No
1	**CHECK FUEL FILLER CAP.** 1) Turn the ignition switch to OFF. 2) Check the fuel filler cap. NOTE: The DTC is stored in memory if fuel filler cap is or was loose or if the cap chain has caught while tightening.	Is the fuel filler cap tightened securely?	Go to step **2**.	Tighten fuel filler cap securely.
2	**CHECK FUEL FILLER CAP.**	Is the fuel filler cap genuine?	Go to step **3**.	Replace with a genuine fuel filler cap.
3	**CHECK FUEL FILLER PIPE GASKET.**	Is there any damage to the seal between fuel filler cap and fuel filler pipe?	Repair or replace the fuel filler cap and fuel filler pipe. <Ref. to FU(H4SO)-55, Fuel Filler Pipe.>	Go to step **4**.
4	**CHECK DRAIN VALVE.** 1) Install the delivery (test) mode fuse. 2) Turn the ignition switch to ON. 3) Operate the drain valve using the Subaru Select Monitor. NOTE: Drain valve can be operated using the Subaru Select Monitor. For detailed procedures, refer to "SYSTEM OPERATION CHECK MODE". <Ref. to EN(H4SO)(diag)-55, System Operation Check Mode.>	Does the drain valve operate?	Go to step **5**.	Replace the drain valve. <Ref. to EC(H4SO)-18, Drain Valve.>
5	**CHECK PURGE CONTROL SOLENOID VALVE.** Operate the purge control solenoid valve using the Subaru Select Monitor. NOTE: Purge control solenoid valve operation can be executed using Subaru Select Monitor. For detailed procedures, refer to "SYSTEM OPERATION CHECK MODE". <Ref. to EN(H4SO)(diag)-55, System Operation Check Mode.>	Does the purge control solenoid valve operate?	Go to step **6**.	Replace the purge control solenoid valve. <Ref. to EC(H4SO)-9, Purge Control Solenoid Valve.>
6	**CHECK EVAPORATIVE EMISSION CONTROL SYSTEM LINE.** 1) Turn the ignition switch to OFF. 2) Check the delivery (test) mode fuse is removed.	Is there any disconnection, damage or clogging on the evaporation line?	Repair or replace the evaporation line. <Ref. to FU(H4SO)-66, Fuel Delivery and Evaporation Lines.>	Go to step **7**.
7	**CHECK CANISTER.**	Is the canister damaged?	Repair or replace the canister. <Ref. to EC(H4SO)-5, Canister.>	Go to step **8**.
8	**CHECK FUEL TANK.** Remove the fuel tank. <Ref. to FU(H4SO)-48, Fuel Tank.>	Is the fuel tank damaged?	Repair or replace the fuel tank. <Ref. to FU(H4SO)-48, Fuel Tank.>	Go to step **9**.
9	**CHECK ANY OTHER MECHANICAL TROUBLE IN EVAPORATIVE EMISSION CONTROL SYSTEM.**	Are there holes, cracks, clogging, or disconnections, misconnection of hoses or pipes in evaporative emission control system?	Repair or replace the hoses or pipes.	Repair the poor contact of ECM connector.

BO:DTC P0458 EVAPORATIVE EMISSION SYSTEM PURGE CONTROL VALVE CIRCUIT LOW

DTC DETECTING CONDITION:

- Detected when two consecutive driving cycles with fault occur.
- GENERAL DESCRIPTION <Ref. to GD(H4SO)-128, DTC P0458 EVAPORATIVE EMISSION SYSTEM PURGE CONTROL VALVE CIRCUIT LOW, Diagnostic Trouble Code (DTC) Detecting Criteria.>

TROUBLE SYMPTOM:

Improper idling

CAUTION:

After servicing or replacing faulty parts, perform Clear Memory Mode <Ref. to EN(H4SO)(diag)-54, OPERATION, Clear Memory Mode.>, and Inspection Mode <Ref. to EN(H4SO)(diag)-42, PROCEDURE, Inspection Mode.>.

WIRING DIAGRAM:

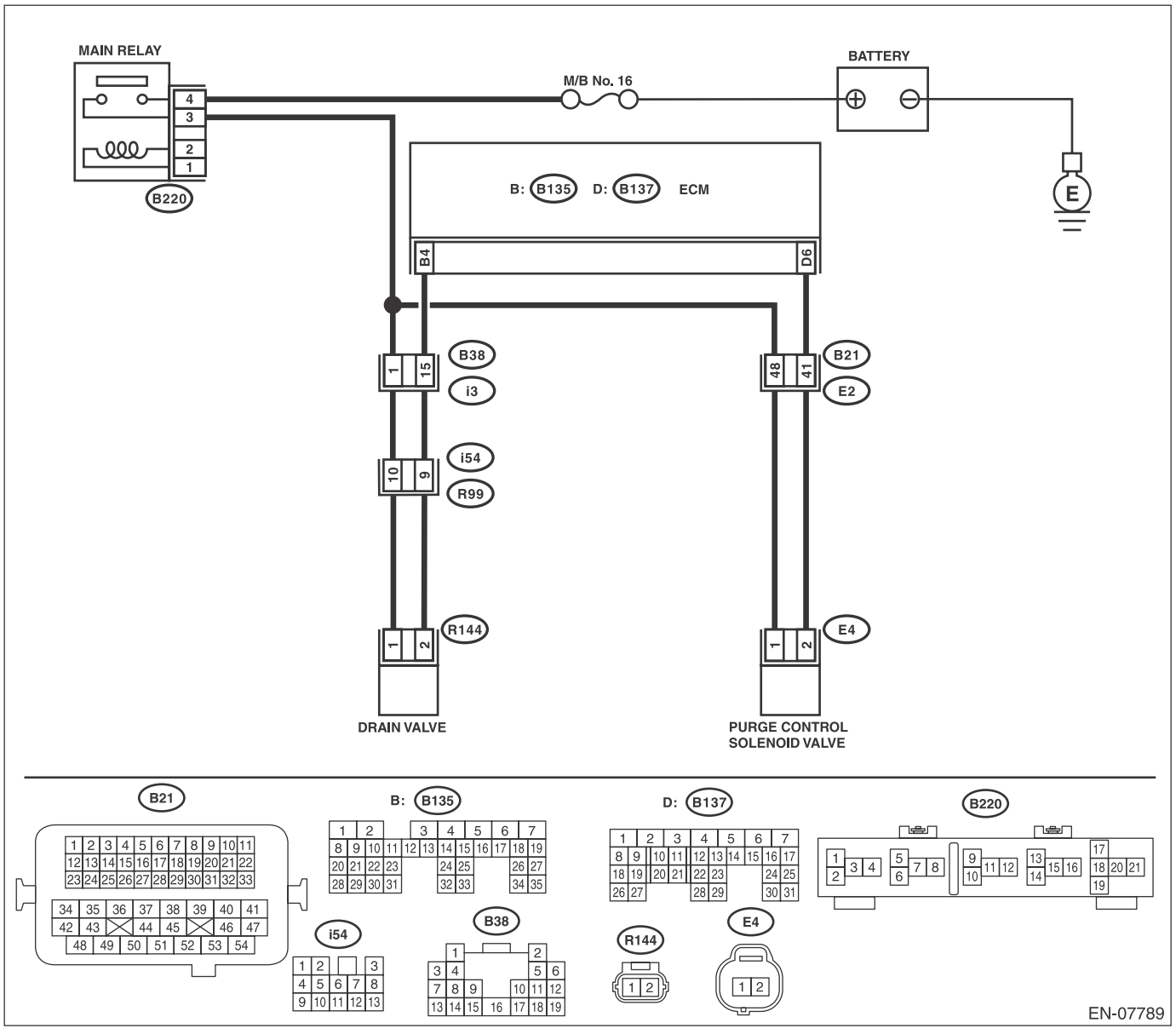

	Step	Check	Yes	No
1	**CHECK OUTPUT SIGNAL OF ECM.** 1) Turn the ignition switch to ON. 2) Measure the voltage between ECM and chassis ground. ***Connector & terminal*** ***(B137) No. 6 (+) — Chassis ground (–):***	Is the voltage 10 V or more?	Go to step **2**.	Go to step **3**.
2	**CHECK FOR POOR CONTACT.** Check for poor contact of ECM connector.	Is there poor contact of ECM connector?	Repair the poor contact of ECM connector.	Even if DTC is detected, the circuit has returned to a normal condition at this time. Reproduce the failure, and then perform the diagnosis again. NOTE: In this case, temporary open or short circuit of harness or temporary poor contact of connector may be the cause.
3	**CHECK POWER SUPPLY TO PURGE CONTROL SOLENOID VALVE.** Measure the voltage between purge control solenoid valve and engine ground. ***Connector & terminal*** ***(E4) No. 1 (+) — Engine ground (–):***	Is the voltage 10 V or more?	Go to step **4**.	Repair the power supply circuit.
4	**CHECK HARNESS BETWEEN ECM AND PURGE CONTROL SOLENOID VALVE CONNECTOR.** 1) Turn the ignition switch to OFF. 2) Disconnect the connectors from ECM and purge control solenoid valve. 3) Measure the resistance between the purge control solenoid valve connector and engine ground. ***Connector & terminal*** ***(E4) No. 2 — Engine ground:***	Is the resistance 1 MΩ or more?	Go to step **5**.	Repair the ground short circuit of harness between ECM and purge control solenoid valve connector.
5	**CHECK HARNESS BETWEEN ECM AND PURGE CONTROL SOLENOID VALVE CONNECTOR.** Measure the resistance of harness between ECM and purge control solenoid valve. ***Connector & terminal*** ***(B137) No. 6 — (E4) No. 2:***	Is the resistance less than 1 Ω?	Go to step **6**.	Repair the harness and connector. NOTE: In this case, repair the following item: • Open circuit in harness between ECM and purge control solenoid valve connector • Poor contact of coupling connector
6	**CHECK PURGE CONTROL SOLENOID VALVE.** 1) Remove the purge control solenoid valve. 2) Measure the resistance between purge control solenoid valve terminals. ***Terminals*** ***No. 1 — No. 2:***	Is the resistance 10 — 100 Ω?	Repair the poor contact of purge control solenoid valve connector.	Replace the purge control solenoid valve. <Ref. to EC(H4SO)-9, Purge Control Solenoid Valve.>

BP:DTC P0459 EVAPORATIVE EMISSION SYSTEM PURGE CONTROL VALVE CIRCUIT HIGH

DTC DETECTING CONDITION:

- Detected when two consecutive driving cycles with fault occur.
- GENERAL DESCRIPTION <Ref. to GD(H4SO)-130, DTC P0459 EVAPORATIVE EMISSION SYSTEM PURGE CONTROL VALVE CIRCUIT HIGH, Diagnostic Trouble Code (DTC) Detecting Criteria.>

TROUBLE SYMPTOM:

Improper idling

CAUTION:

After servicing or replacing faulty parts, perform Clear Memory Mode <Ref. to EN(H4SO)(diag)-54, OPERATION, Clear Memory Mode.>, and Inspection Mode <Ref. to EN(H4SO)(diag)-42, PROCEDURE, Inspection Mode.>.

WIRING DIAGRAM:

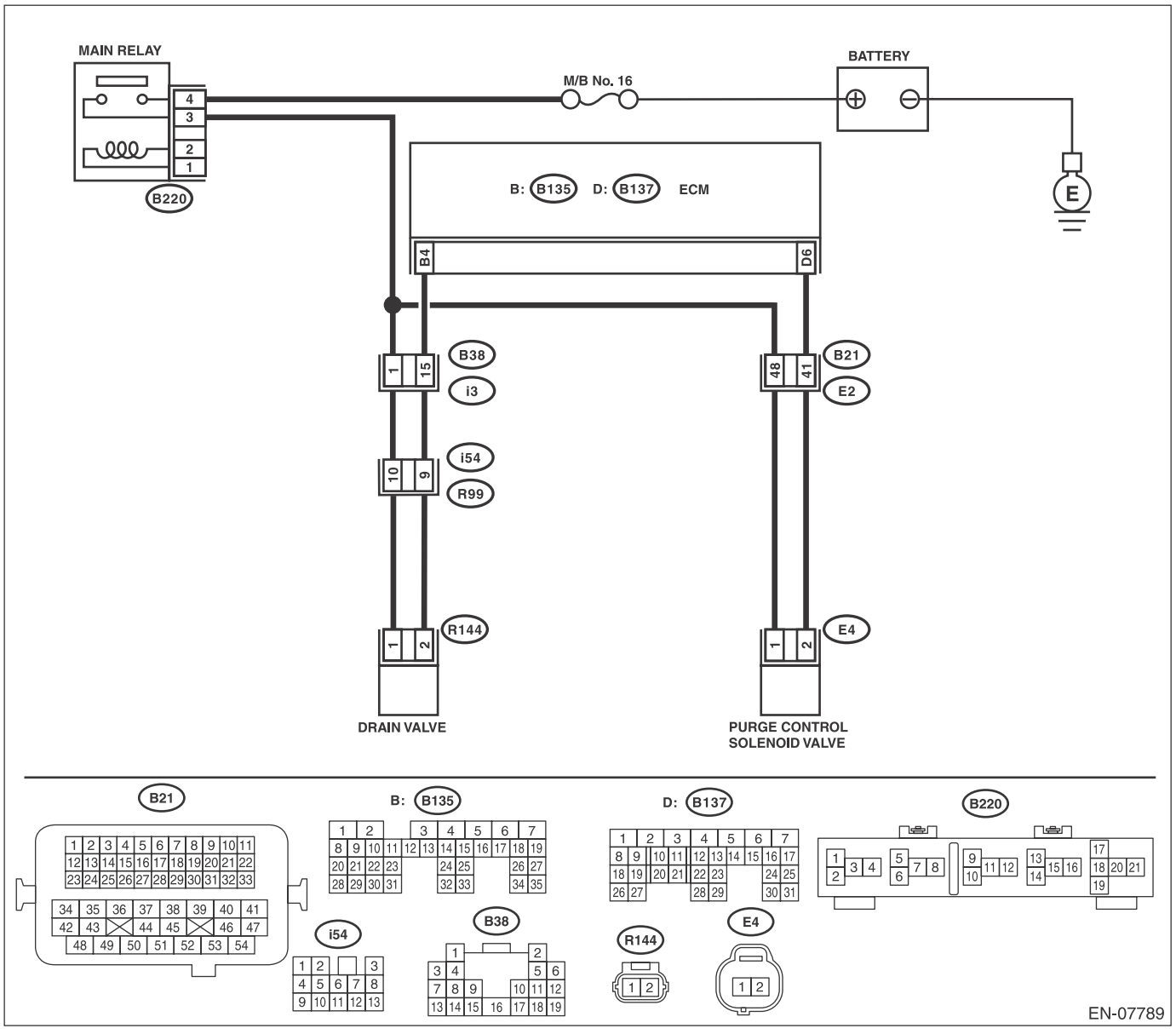

	Step	Check	Yes	No
1	**CHECK HARNESS BETWEEN ECM AND PURGE CONTROL SOLENOID VALVE CONNECTOR.** 1) Turn the ignition switch to OFF. 2) Disconnect the connectors from ECM and purge control solenoid valve. 3) Turn the ignition switch to ON. 4) Measure the voltage between ECM and chassis ground. ***Connector & terminal*** ***(B137) No. 6 (+) — Chassis ground (−):***	Is the voltage 10 V or more?	Repair the short circuit of harness to power supply between ECM and purge control solenoid valve connector.	Go to step **2**.
2	**CHECK PURGE CONTROL SOLENOID VALVE.** 1) Turn the ignition switch to OFF. 2) Measure the resistance between purge control solenoid valve terminals. ***Terminals*** ***No. 1 — No. 2:***	Is the resistance less than 1 Ω?	Replace the purge control solenoid valve. <Ref. to EC(H4SO)-9, Purge Control Solenoid Valve.>	Repair the poor contact of ECM connector.

BQ:DTC P0461 FUEL LEVEL SENSOR “A” CIRCUIT RANGE/PERFORMANCE

DTC DETECTING CONDITION:

- Detected when two consecutive driving cycles with fault occur.
- GENERAL DESCRIPTION <Ref. to GD(H4SO)-132, DTC P0461 FUEL LEVEL SENSOR “A” CIRCUIT RANGE/PERFORMANCE, Diagnostic Trouble Code (DTC) Detecting Criteria.>

CAUTION:
After servicing or replacing faulty parts, perform Clear Memory Mode <Ref. to EN(H4SO)(diag)-54, OPERATION, Clear Memory Mode.>, and Inspection Mode <Ref. to EN(H4SO)(diag)-42, PROCEDURE, Inspection Mode.>.

Step		Check	Yes	No
1	**CHECK FOR ANY OTHER DTC ON DISPLAY.**	Is any other DTC displayed?	Check the appropriate DTC using the “List of Diagnostic Trouble Code (DTC)”. <Ref. to EN(H4SO)(diag)-79, List of Diagnostic Trouble Code (DTC).>	Replace the fuel level sensor and fuel sub level sensor. <Ref. to FU(H4SO)-60, Fuel Level Sensor.> <Ref. to FU(H4SO)-62, Fuel Sub Level Sensor.>

BR:DTC P0462 FUEL LEVEL SENSOR “A” CIRCUIT LOW

NOTE:
For the diagnostic procedure, refer to DTC P0463. <Ref. to EN(H4SO)(diag)-218, DTC P0463 FUEL LEVEL SENSOR “A” CIRCUIT HIGH, Diagnostic Procedure with Diagnostic Trouble Code (DTC).>

BS:DTC P0463 FUEL LEVEL SENSOR “A” CIRCUIT HIGH

DTC DETECTING CONDITION:

- Detected when two consecutive driving cycles with fault occur.
- GENERAL DESCRIPTION <Ref. to GD(H4SO)-136, DTC P0463 FUEL LEVEL SENSOR “A” CIRCUIT HIGH, Diagnostic Trouble Code (DTC) Detecting Criteria.>

CAUTION:
After servicing or replacing faulty parts, perform Clear Memory Mode <Ref. to EN(H4SO)(diag)-54, OPERATION, Clear Memory Mode.>, and Inspection Mode <Ref. to EN(H4SO)(diag)-42, PROCEDURE, Inspection Mode.>.

Step		Check	Yes	No
1	**CHECK FOR ANY OTHER DTC ON DISPLAY.**	Is DTC P0462 or P0463 displayed on the Subaru Select Monitor?	Check the combination meter. <Ref. to IDI-12, CHECK FUEL LEVEL SENSOR, INSPECTION, Combination Meter System.>	Even if DTC is detected, the circuit has returned to a normal condition at this time. Reproduce the failure, and then perform the diagnosis again. NOTE: In this case, temporary poor contact of connector, temporary open or short circuit of harness may be the cause.

BT:DTC P0464 FUEL LEVEL SENSOR CIRCUIT INTERMITTENT

DTC DETECTING CONDITION:

- Detected when two consecutive driving cycles with fault occur.
- GENERAL DESCRIPTION <Ref. to GD(H4SO)-138, DTC P0464 FUEL LEVEL SENSOR CIRCUIT INTERMITTENT, Diagnostic Trouble Code (DTC) Detecting Criteria.>

CAUTION:
After servicing or replacing faulty parts, perform Clear Memory Mode <Ref. to EN(H4SO)(diag)-54, OPERATION, Clear Memory Mode.>, and Inspection Mode <Ref. to EN(H4SO)(diag)-42, PROCEDURE, Inspection Mode.>.

Step		Check	Yes	No
1	**CHECK FOR ANY OTHER DTC ON DISPLAY.**	Is DTC P0464 displayed on the display?	Check the combination meter. <Ref. to IDI-12, CHECK FUEL LEVEL SENSOR, INSPECTION, Combination Meter System.>	Even if DTC is detected, the circuit has returned to a normal condition at this time. Reproduce the failure, and then perform the diagnosis again. NOTE: In this case, temporary poor contact of connector, temporary open or short circuit of harness may be the cause.

BU:DTC P0500 VEHICLE SPEED SENSOR “A”

DTC DETECTING CONDITION:

- Immediately at fault recognition
- GENERAL DESCRIPTION <Ref. to GD(H4SO)-141, DTC P0500 VEHICLE SPEED SENSOR “A”, Diagnostic Trouble Code (DTC) Detecting Criteria.>

CAUTION:
After servicing or replacing faulty parts, perform Clear Memory Mode <Ref. to EN(H4SO)(diag)-54, OPERATION, Clear Memory Mode.>, and Inspection Mode <Ref. to EN(H4SO)(diag)-42, PROCEDURE, Inspection Mode.>.

Step		Check	Yes	No
1	**CHECK DTC OF VDC.** Check DTC of VDC.	Is DTC of VDC displayed?	Perform the diagnosis according to DTC. <Ref. to VDC(diag)-35, List of Diagnostic Trouble Code (DTC).>	Repair the poor contact of ECM connector.

BV:DTC P0506 IDLE AIR CONTROL SYSTEM RPM LOWER THAN EXPECTED

DTC DETECTING CONDITION:

- Detected when two consecutive driving cycles with fault occur.
- GENERAL DESCRIPTION <Ref. to GD(H4SO)-142, DTC P0506 IDLE AIR CONTROL SYSTEM RPM LOWER THAN EXPECTED, Diagnostic Trouble Code (DTC) Detecting Criteria.>

TROUBLE SYMPTOM:

- Hard to start the engine.
- Engine does not start.
- Improper idling
- Engine stalls.

CAUTION:

After servicing or replacing faulty parts, perform Clear Memory Mode <Ref. to EN(H4SO)(diag)-54, OPERATION, Clear Memory Mode.>, and Inspection Mode <Ref. to EN(H4SO)(diag)-42, PROCEDURE, Inspection Mode.>.

WIRING DIAGRAM:

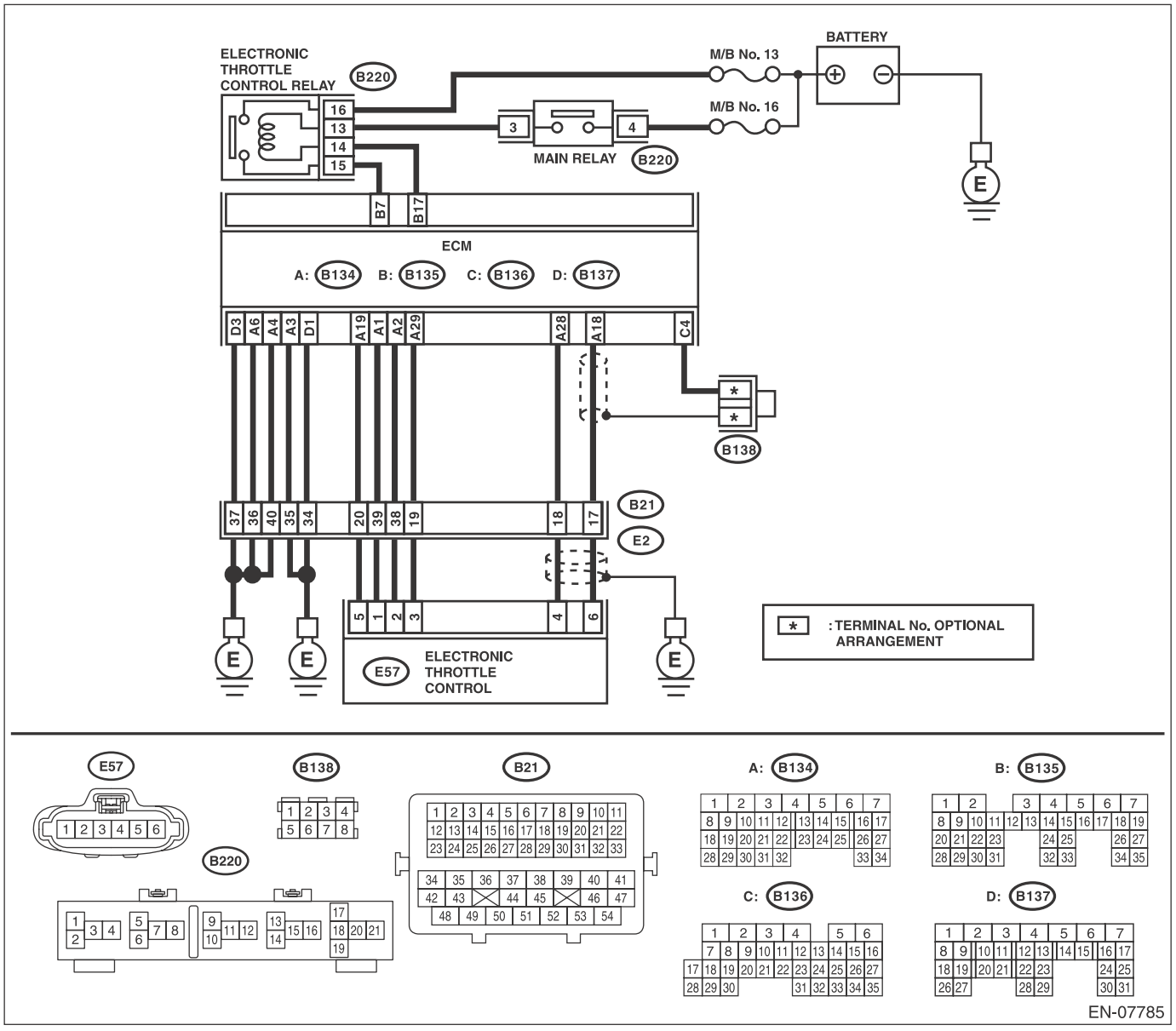

	Step	Check	Yes	No
1	**CHECK FOR ANY OTHER DTC ON DISPLAY.**	Is any other DTC displayed?	Check the appropriate DTC using the “List of Diagnostic Trouble Code (DTC)”. <Ref. to EN(H4SO)(diag)-79, List of Diagnostic Trouble Code (DTC).>	Go to step **2**.
2	**CHECK AIR CLEANER ELEMENT.** 1) Turn the ignition switch to OFF. 2) Check the air cleaner element.	Is there excessive clogging on air cleaner element?	Replace the air cleaner element. <Ref. to IN(H4SO)-4, Air Cleaner Element.>	Go to step **3**.
3	**CHECK ELECTRONIC THROTTLE CONTROL.** 1) Remove the electronic throttle control. <Ref. to FU(H4SO)-14, REMOVAL, Throttle Body.> 2) Check the electronic throttle control.	Are foreign matter found inside electronic throttle control?	Remove foreign matter from electronic throttle control.	Perform the diagnosis of DTC P2101. <Ref. to EN(H4SO)(diag)-276, DTC P2101 THROTTLE ACTUATOR CONTROL MOTOR CIRCUIT RANGE/PERFORMANCE, Diagnostic Procedure with Diagnostic Trouble Code (DTC).>

BW:DTC P0507 IDLE AIR CONTROL SYSTEM RPM HIGHER THAN EXPECTED

DTC DETECTING CONDITION:

- Detected when two consecutive driving cycles with fault occur.
- GENERAL DESCRIPTION <Ref. to GD(H4SO)-143, DTC P0507 IDLE AIR CONTROL SYSTEM RPM HIGHER THAN EXPECTED, Diagnostic Trouble Code (DTC) Detecting Criteria.>

TROUBLE SYMPTOM:

Engine keeps running at higher speed than specified idle speed.

CAUTION:

After servicing or replacing faulty parts, perform Clear Memory Mode <Ref. to EN(H4SO)(diag)-54, OPERATION, Clear Memory Mode.>, and Inspection Mode <Ref. to EN(H4SO)(diag)-42, PROCEDURE, Inspection Mode.>.

WIRING DIAGRAM:

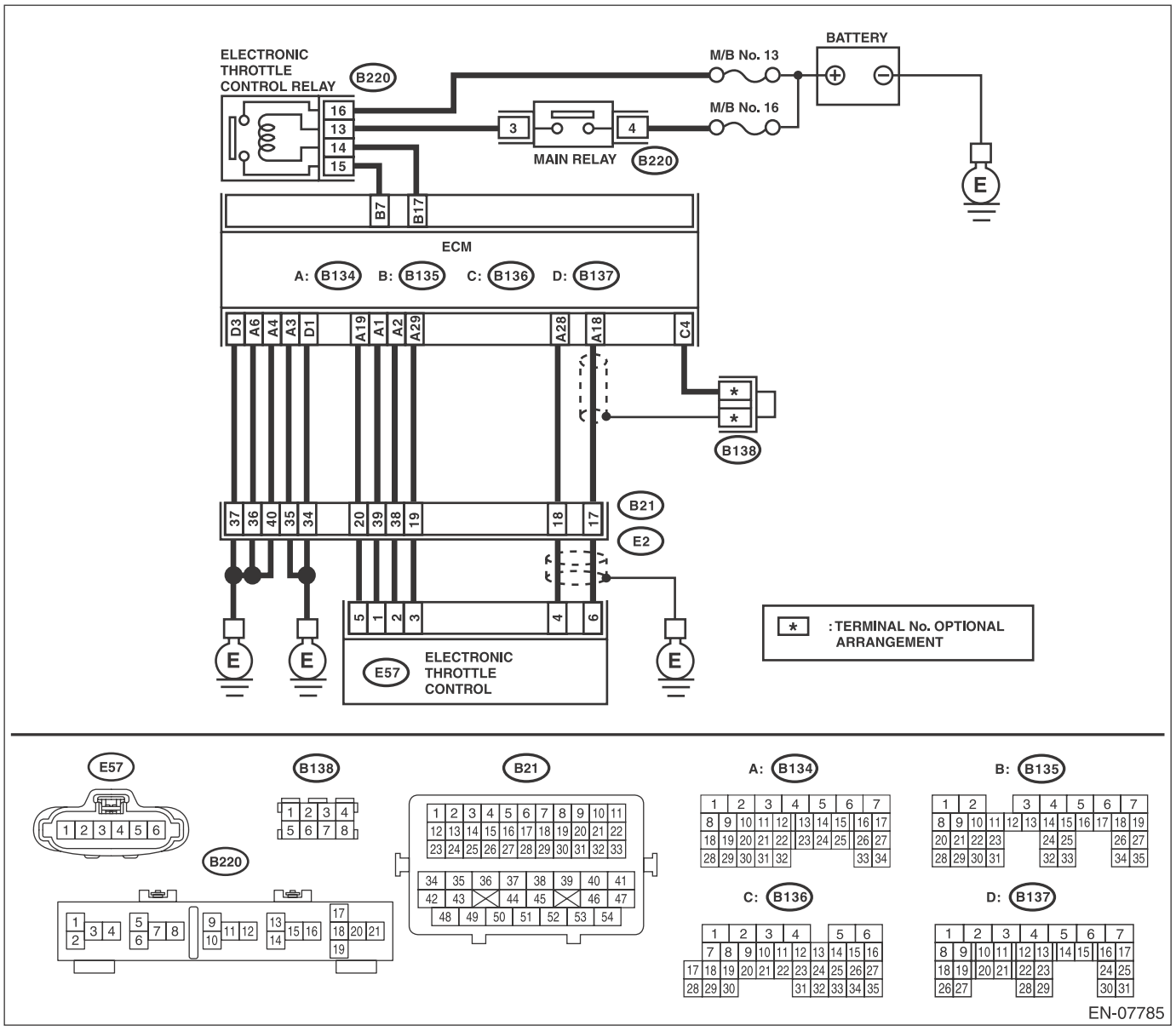

	Step	Check	Yes	No
1	**CHECK FOR ANY OTHER DTC ON DISPLAY.**	Is any other DTC displayed?	Check the appropriate DTC using the "List of Diagnostic Trouble Code (DTC)". <Ref. to EN(H4SO)(diag)-79, List of Diagnostic Trouble Code (DTC).>	Go to step **2**.
2	**CHECK AIR INTAKE SYSTEM.** 1) Start and idle the engine. 2) Check the following items. • Loose installation of intake manifold and throttle body • Cracks of intake manifold gasket and throttle body gasket • Disconnection of vacuum hoses	Is there any fault in air intake system?	Repair air suction and leaks.	Go to step **3**.
3	**CHECK ELECTRONIC THROTTLE CONTROL.** 1) Turn the ignition switch to OFF. 2) Remove the electronic throttle control. <Ref. to FU(H4SO)-14, REMOVAL, Throttle Body.> 3) Check the electronic throttle control.	Are foreign matter found inside electronic throttle control?	Remove foreign matter from electronic throttle control.	Perform the diagnosis of DTC P2101. <Ref. to EN(H4SO)(diag)-276, DTC P2101 THROTTLE ACTUATOR CONTROL MOTOR CIRCUIT RANGE/PERFORMANCE, Diagnostic Procedure with Diagnostic Trouble Code (DTC).>

BX:DTC P0512 STARTER REQUEST CIRCUIT

DTC DETECTING CONDITION:

- Immediately at fault recognition
- GENERAL DESCRIPTION <Ref. to GD(H4SO)-144, DTC P0512 STARTER REQUEST CIRCUIT, Diagnostic Trouble Code (DTC) Detecting Criteria.>

TROUBLE SYMPTOM:

Failure of engine to start

CAUTION:

After servicing or replacing faulty parts, perform Clear Memory Mode <Ref. to EN(H4SO)(diag)-54, OPERATION, Clear Memory Mode.>, and Inspection Mode <Ref. to EN(H4SO)(diag)-42, PROCEDURE, Inspection Mode.>.

WIRING DIAGRAM:

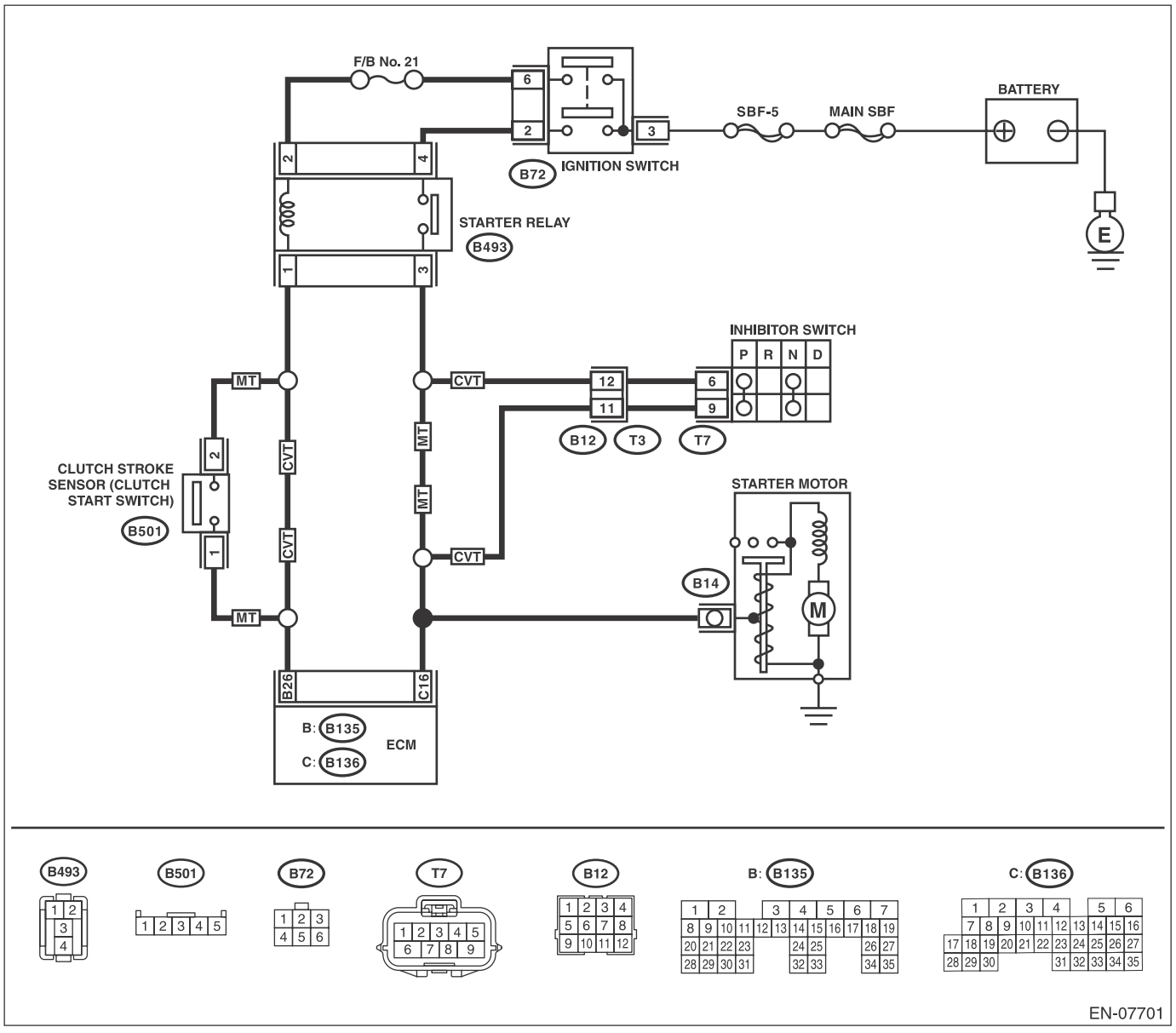

	Step	Check	Yes	No
1	**CHECK FOR ANY OTHER DTC ON DISPLAY.**	Is any other DTC displayed?	Check the appropriate DTC using the “List of Diagnostic Trouble Code (DTC)”. <Ref. to EN(H4SO)(diag)-79, List of Diagnostic Trouble Code (DTC).>	Go to step **2**.
2	**CHECK HARNESS BETWEEN ECM AND STARTER RELAY CONNECTOR.** 1) Turn the ignition switch to OFF. 2) Disconnect the connector from ECM. 3) Turn the ignition switch to ON. 4) Measure the voltage between ECM and chassis ground. ***Connector & terminal*** ***(B136) No. 16 (+) — Chassis ground (–):*** NOTE: For CVT model, place the select lever in “P” range or “N” range.	Is the voltage 10 V or more?	Repair the short circuit to power supply in harness between ECM and starter relay connector.	Repair the poor contact of ECM connector.

BY:DTC P0604 INTERNAL CONTROL MODULE RANDOM ACCESS MEMORY (RAM) ERROR

DTC DETECTING CONDITION:

- Immediately at fault recognition
- GENERAL DESCRIPTION <Ref. to GD(H4SO)-146, DTC P0604 INTERNAL CONTROL MODULE RANDOM ACCESS MEMORY (RAM) ERROR, Diagnostic Trouble Code (DTC) Detecting Criteria.>

TROUBLE SYMPTOM:

- Engine does not start.
- Engine stalls.

CAUTION:

After servicing or replacing faulty parts, perform Clear Memory Mode <Ref. to EN(H4SO)(diag)-54, OPERATION, Clear Memory Mode.>, and Inspection Mode <Ref. to EN(H4SO)(diag)-42, PROCEDURE, Inspection Mode.>.

WIRING DIAGRAM:

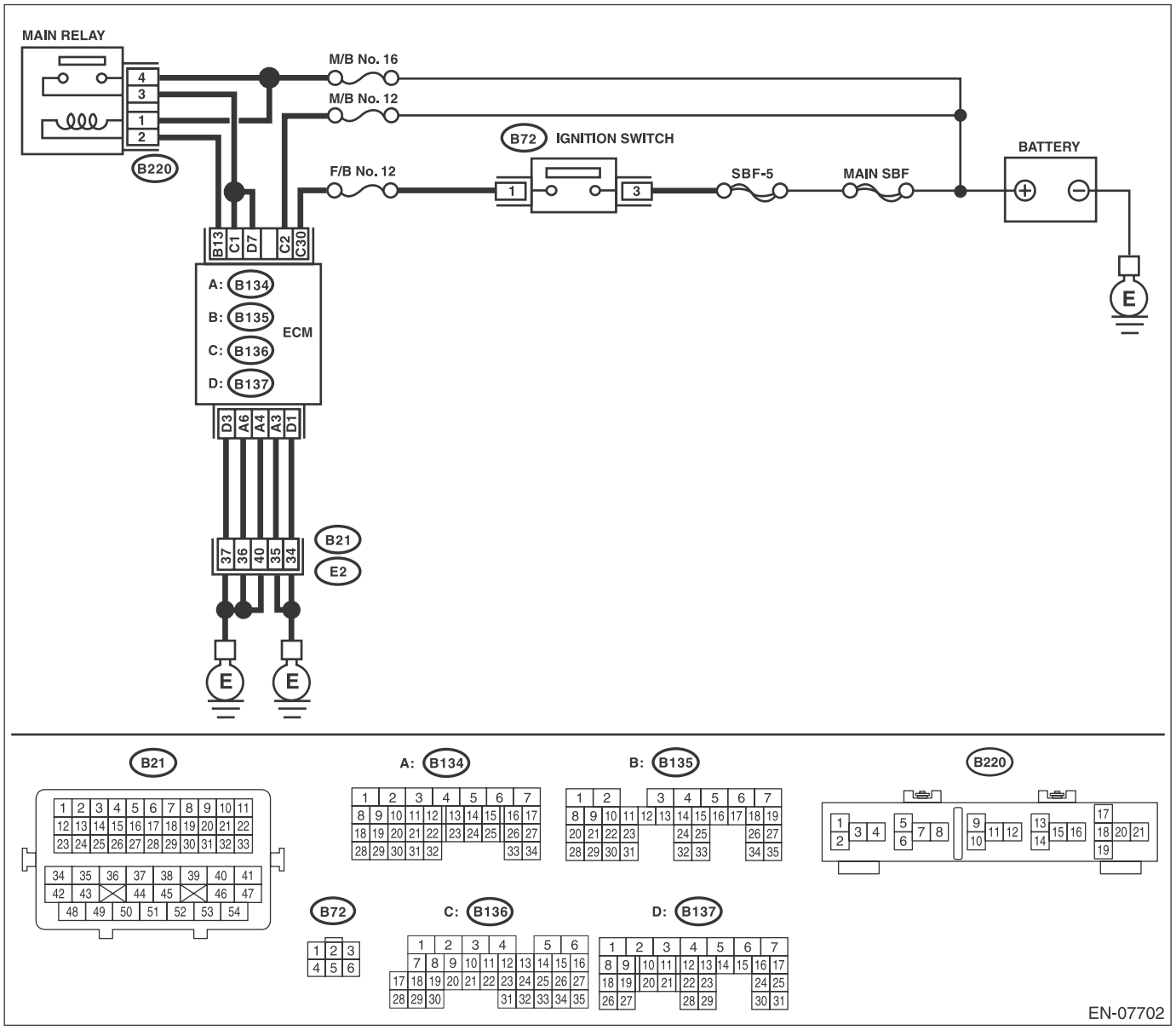

Step		Check	Yes	No
1	**CHECK FOR ANY OTHER DTC ON DISPLAY.**	Is any other DTC displayed?	Check the appropriate DTC using the “List of Diagnostic Trouble Code (DTC)”. <Ref. to EN(H4SO)(diag)-79, List of Diagnostic Trouble Code (DTC).>	Even if DTC is detected, the circuit has returned to a normal condition at this time. Reproduce the failure, and then perform the diagnosis again. NOTE: In this case, temporary poor contact of connector, temporary open or short circuit of harness may be the cause.

BZ:DTC P0605 INTERNAL CONTROL MODULE READ ONLY MEMORY (ROM) ERROR

NOTE:
For the diagnostic procedure, refer to DTC P0607. <Ref. to EN(H4SO)(diag)-228, DTC P0607 THROTTLE CONTROL SYSTEM CIRCUIT RANGE/PERFORMANCE, Diagnostic Procedure with Diagnostic Trouble Code (DTC).>

CA:DTC P0607 THROTTLE CONTROL SYSTEM CIRCUIT RANGE/PERFORMANCE

DTC DETECTING CONDITION:

- Immediately at fault recognition
- GENERAL DESCRIPTION <Ref. to GD(H4SO)-148, DTC P0607 THROTTLE CONTROL SYSTEM CIRCUIT RANGE/PERFORMANCE, Diagnostic Trouble Code (DTC) Detecting Criteria.>

TROUBLE SYMPTOM:

- Improper idling
- Poor driving performance

CAUTION:

After servicing or replacing faulty parts, perform Clear Memory Mode <Ref. to EN(H4SO)(diag)-54, OPERATION, Clear Memory Mode.>, and Inspection Mode <Ref. to EN(H4SO)(diag)-42, PROCEDURE, Inspection Mode.>.

WIRING DIAGRAM:

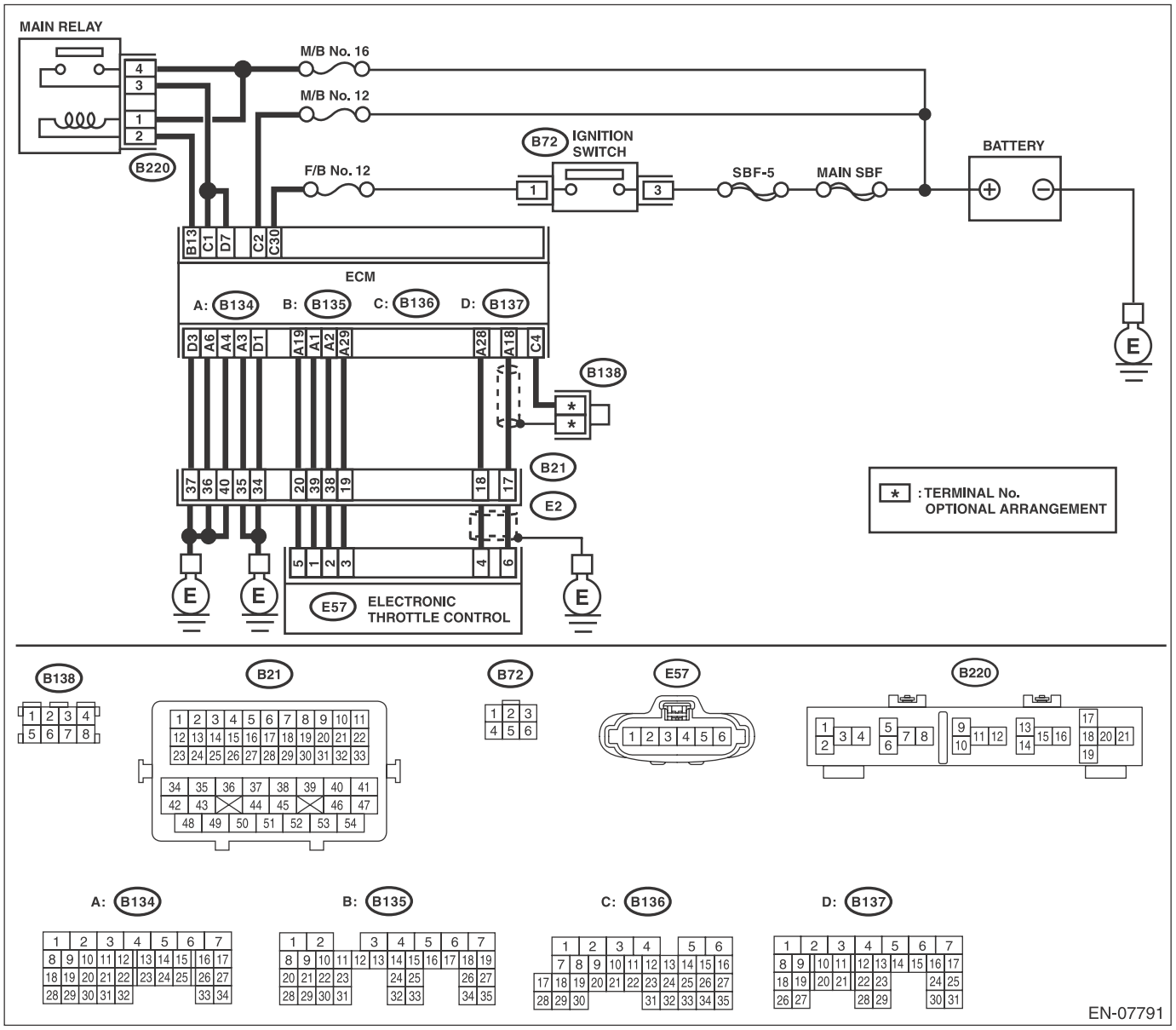

	Step	Check	Yes	No
1	**CHECK INPUT VOLTAGE OF ECM.** 1) Turn the ignition switch to ON. 2) Measure the voltage between ECM and chassis ground. ***Connector & terminal*** ***(B136) No. 1 (+) — Chassis ground (–):*** ***(B137) No. 7 (+) — Chassis ground (–):***	Is the voltage 10 — 13 V?	Go to step **2**.	Repair the open or ground short circuit of power supply circuit.
2	**CHECK INPUT VOLTAGE OF ECM.** 1) Start the engine. 2) Measure the voltage between ECM and chassis ground. ***Connector & terminal*** ***(B136) No. 1 (+) — Chassis ground (–):*** ***(B137) No. 7 (+) — Chassis ground (–):***	Is the voltage 13 — 15 V?	Go to step **3**.	Repair the open or ground short circuit of power supply circuit.
3	**CHECK HARNESS BETWEEN ECM AND ELECTRONIC THROTTLE CONTROL CONNECTOR.** 1) Turn the ignition switch to OFF. 2) Disconnect the connectors from the ECM and electronic throttle control. 3) Measure the resistance of harness between ECM and electronic throttle control connector. ***Connector & terminal*** ***(B134) No. 19 — (E57) No. 5:*** ***(B134) No. 29 — (E57) No. 3:***	Is the resistance less than 1 Ω?	Go to step **4**.	Repair the harness and connector. NOTE: In this case, repair the following item: • Open circuit in harness between ECM and electronic throttle control connector • Poor contact of coupling connector
4	**CHECK ECM GROUND HARNESS.** 1) Connect all connectors. 2) Turn the ignition switch to ON. 3) Measure the voltage between ECM and chassis ground. ***Connector & terminal*** ***(B134) No. 3 (+) — Chassis ground (–):*** ***(B134) No. 4 (+) — Chassis ground (–):*** ***(B134) No. 6 (+) — Chassis ground (–):*** ***(B137) No. 1 (+) — Chassis ground (–):*** ***(B137) No. 3 (+) — Chassis ground (–):***	Is the voltage less than 1 V?	Repair the poor contact of ECM connector.	Repair the harness and connector. NOTE: In this case, repair the following item: • Open circuit in ground circuit • Retightening of engine ground terminals • Poor contact of coupling connector

CB:DTC P0638 THROTTLE ACTUATOR CONTROL RANGE/PERFORMANCE (BANK 1)

NOTE:
For the diagnostic procedure, refer to DTC P2101. <Ref. to EN(H4SO)(diag)-276, DTC P2101 THROTTLE ACTUATOR CONTROL MOTOR CIRCUIT RANGE/PERFORMANCE, Diagnostic Procedure with Diagnostic Trouble Code (DTC).>

CC:DTC P0700 TRANSMISSION CONTROL SYSTEM (MIL REQUEST)

NOTE:
For the diagnostic procedure, refer to CVT section. <Ref. to CVT(diag)-2, Basic Diagnostic Procedure.>

CD:DTC P0851 PARK/NEUTRAL SWITCH INPUT CIRCUIT LOW (AT MODEL)

DTC DETECTING CONDITION:

- Detected when two consecutive driving cycles with fault occur.
- GENERAL DESCRIPTION <Ref. to GD(H4SO)-153, DTC P0851 PARK/NEUTRAL SWITCH INPUT CIRCUIT LOW (AT MODEL), Diagnostic Trouble Code (DTC) Detecting Criteria.>

TROUBLE SYMPTOM:

Improper idling

CAUTION:

After servicing or replacing faulty parts, perform Clear Memory Mode <Ref. to EN(H4SO)(diag)-54, OPERATION, Clear Memory Mode.>, and Inspection Mode <Ref. to EN(H4SO)(diag)-42, PROCEDURE, Inspection Mode.>.

WIRING DIAGRAM:

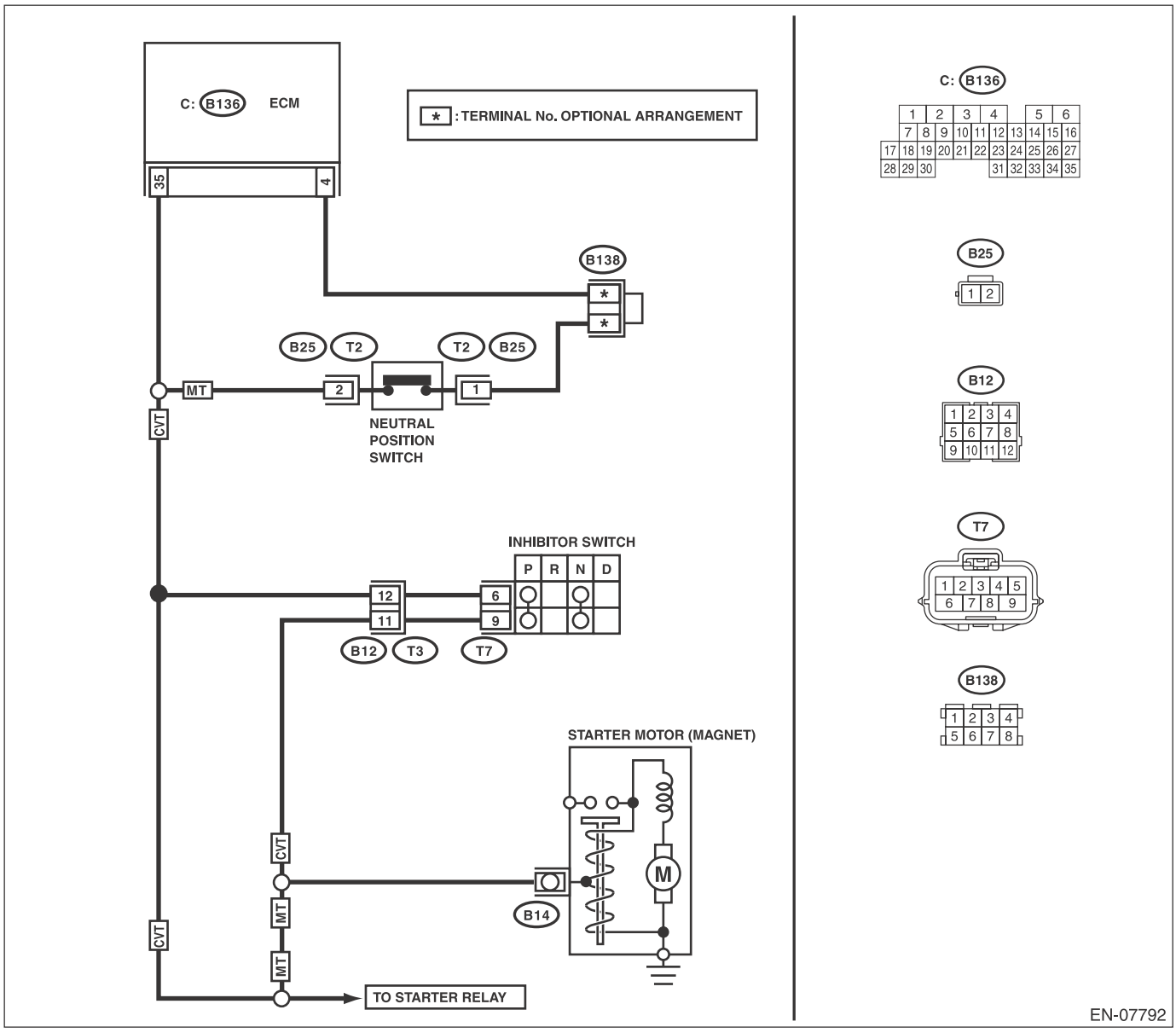

Step		Check	Yes	No
1	CHECK SELECT CABLE.	Is there any fault in select cable?	Repair or adjust the select cable. <Ref. to CS-41, Select Cable.>	Go to step **2**.

	Step	Check	Yes	No
2	**CHECK INPUT SIGNAL OF ECM.** 1) Turn the ignition switch to ON. 2) Place the select lever in other than "P" range and "N" range. 3) Measure the voltage between ECM and chassis ground. ***Connector & terminal*** ***(B136) No. 35 (+) — Chassis ground (–):***	Is the voltage 10 V or more?	Repair the poor contact of ECM connector.	Go to step **3**.
3	**CHECK HARNESS BETWEEN ECM AND TRANSMISSION HARNESS CONNECTOR.** 1) Turn the ignition switch to OFF. 2) Disconnect the connectors from ECM and transmission harness connector (T3). 3) Measure the resistance between ECM and chassis ground. ***Connector & terminal*** ***(B136) No. 35 — Chassis ground:***	Is the resistance 1 MΩ or more?	Go to step **4**.	Repair the ground short circuit of harness between ECM and transmission harness connector.
4	**CHECK TRANSMISSION HARNESS CONNECTOR.** 1) Disconnect the connector from inhibitor switch. 2) Measure the resistance between transmission harness connector and engine ground. ***Connector & terminal*** ***(T3) No. 12 — Engine ground:***	Is the resistance 1 MΩ or more?	Replace the inhibitor switch. <Ref. to CVT-94, Inhibitor Switch.>	Repair the ground short circuit of harness between transmission harness connector and inhibitor switch connector.

CE:DTC P0851 NEUTRAL SWITCH INPUT CIRCUIT LOW (MT MODEL)

DTC DETECTING CONDITION:

- Detected when two consecutive driving cycles with fault occur.
- GENERAL DESCRIPTION <Ref. to GD(H4SO)-154, DTC P0851 NEUTRAL SWITCH INPUT CIRCUIT LOW (MT MODEL), Diagnostic Trouble Code (DTC) Detecting Criteria.>

TROUBLE SYMPTOM:

Improper idling

CAUTION:

After servicing or replacing faulty parts, perform Clear Memory Mode <Ref. to EN(H4SO)(diag)-54, OPERATION, Clear Memory Mode.>, and Inspection Mode <Ref. to EN(H4SO)(diag)-42, PROCEDURE, Inspection Mode.>.

WIRING DIAGRAM:

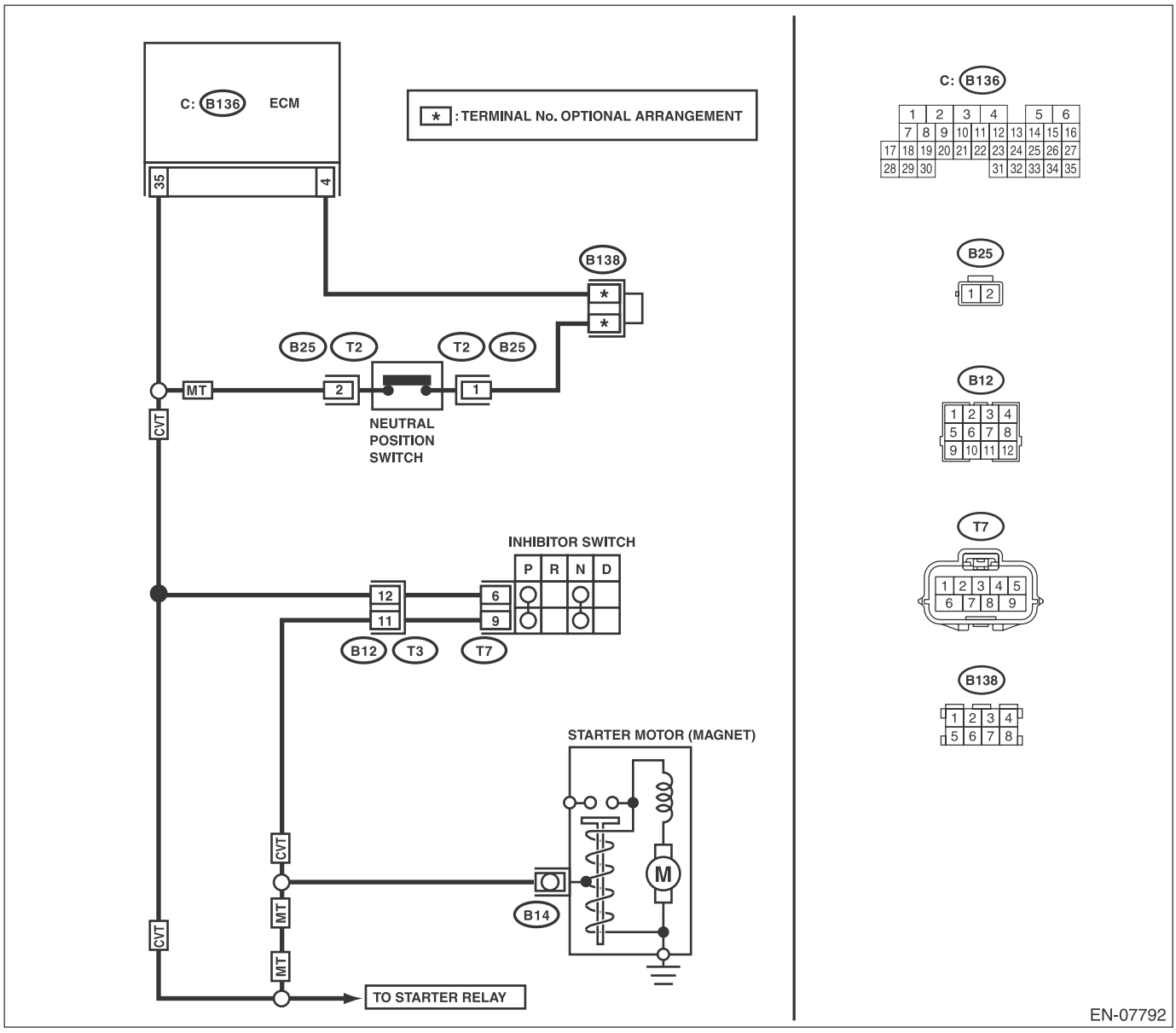

	Step	Check	Yes	No
1	**CHECK INPUT SIGNAL OF ECM.** 1) Turn the ignition switch to ON. 2) Place the shift lever in a position other than neutral. 3) Measure the voltage between ECM and chassis ground. ***Connector & terminal*** ***(B136) No. 35 (+) — Chassis ground (–):***	Is the voltage 10 V or more?	Repair the poor contact of ECM connector.	Go to step **2**.
2	**CHECK HARNESS BETWEEN ECM AND NEUTRAL POSITION SWITCH CONNECTOR.** 1) Turn the ignition switch to OFF. 2) Disconnect the connectors from ECM and neutral position switch. 3) Measure the resistance between ECM and chassis ground. ***Connector & terminal*** ***(B136) No. 35 — Chassis ground:***	Is the resistance 1 MΩ or more?	Replace the neutral position switch. <Ref. to 6MT-36, Switches and Harness.>	Repair the short circuit to ground harness between ECM and neutral position switch connector.

CF:DTC P0852 PARK/NEUTRAL SWITCH INPUT CIRCUIT HIGH (AT MODEL)

DTC DETECTING CONDITION:

- Detected when two consecutive driving cycles with fault occur.
- GENERAL DESCRIPTION <Ref. to GD(H4SO)-155, DTC P0852 PARK/NEUTRAL SWITCH INPUT CIRCUIT HIGH (AT MODEL), Diagnostic Trouble Code (DTC) Detecting Criteria.>

TROUBLE SYMPTOM:

Improper idling

CAUTION:

After servicing or replacing faulty parts, perform Clear Memory Mode <Ref. to EN(H4SO)(diag)-54, OPERATION, Clear Memory Mode.>, and Inspection Mode <Ref. to EN(H4SO)(diag)-42, PROCEDURE, Inspection Mode.>.

WIRING DIAGRAM:

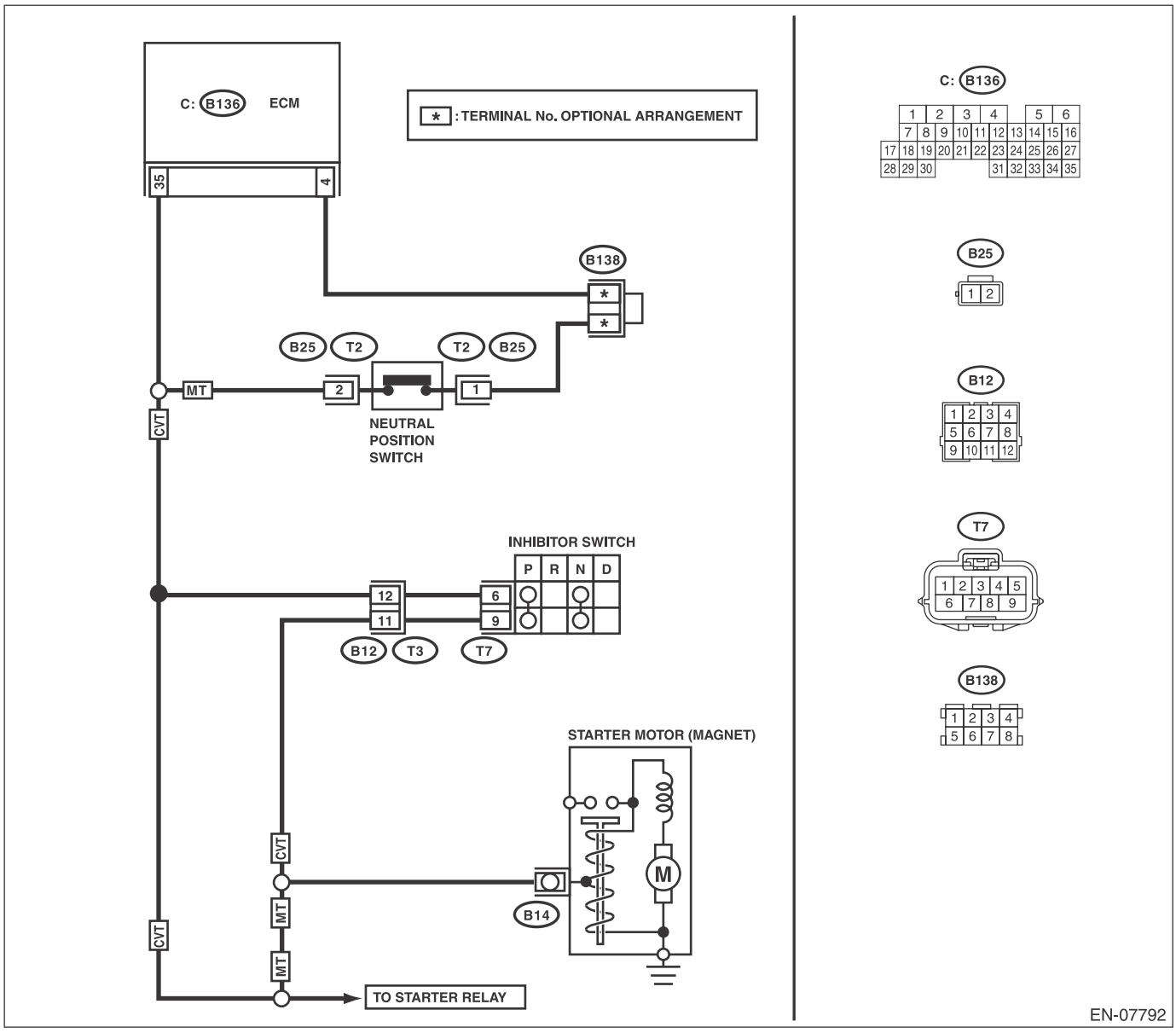

Step		Check	Yes	No
1	**CHECK SELECT CABLE.**	Is there any fault in select cable?	Repair or adjust the select cable. <Ref. to CS-41, Select Cable.>	Go to step **2**.

	Step	Check	Yes	No
2	**CHECK INPUT SIGNAL OF ECM.** 1) Turn the ignition switch to ON. 2) Measure the voltage between ECM and chassis ground with select lever at "P" range and "N" range. ***Connector & terminal*** ***(B136) No. 35 (+) — Chassis ground (–):***	Is the voltage less than 1 V?	Repair the poor contact of ECM connector.	Go to step **3**.
3	**CHECK HARNESS BETWEEN ECM AND INHIBITOR SWITCH CONNECTOR.** 1) Turn the ignition switch to OFF. 2) Disconnect the connectors from ECM and inhibitor switch. 3) Measure the resistance of harness between ECM and inhibitor switch connector. ***Connector & terminal*** ***(B136) No. 35 — (T7) No. 6:***	Is the resistance less than 1 Ω?	Go to step **4**.	Repair the harness and connector. NOTE: In this case, repair the following item: • Open circuit in harness between ECM and inhibitor switch connector • Poor contact of coupling connector
4	**CHECK INHIBITOR SWITCH GROUND LINE.** Measure the resistance of harness between inhibitor switch connector and engine ground. ***Connector & terminal*** ***(T7) No. 9 — Engine ground:***	Is the resistance less than 5 Ω?	Replace the inhibitor switch. <Ref. to CVT-94, Inhibitor Switch.>	Repair the harness and connector. NOTE: In this case, repair the following item: • Open circuit of harness between inhibitor switch connector and starter motor ground line • Poor contact of coupling connector • Poor contact of starter motor connector • Poor contact of starter motor ground • Starter motor

CG:DTC P0852 NEUTRAL SWITCH INPUT CIRCUIT HIGH (MT MODEL)

DTC DETECTING CONDITION:

- Detected when two consecutive driving cycles with fault occur.
- GENERAL DESCRIPTION <Ref. to GD(H4SO)-156, DTC P0852 NEUTRAL SWITCH INPUT CIRCUIT HIGH (MT MODEL), Diagnostic Trouble Code (DTC) Detecting Criteria.>

TROUBLE SYMPTOM:

Improper idling

CAUTION:

After servicing or replacing faulty parts, perform Clear Memory Mode <Ref. to EN(H4SO)(diag)-54, OPERATION, Clear Memory Mode.>, and Inspection Mode <Ref. to EN(H4SO)(diag)-42, PROCEDURE, Inspection Mode.>.

WIRING DIAGRAM:

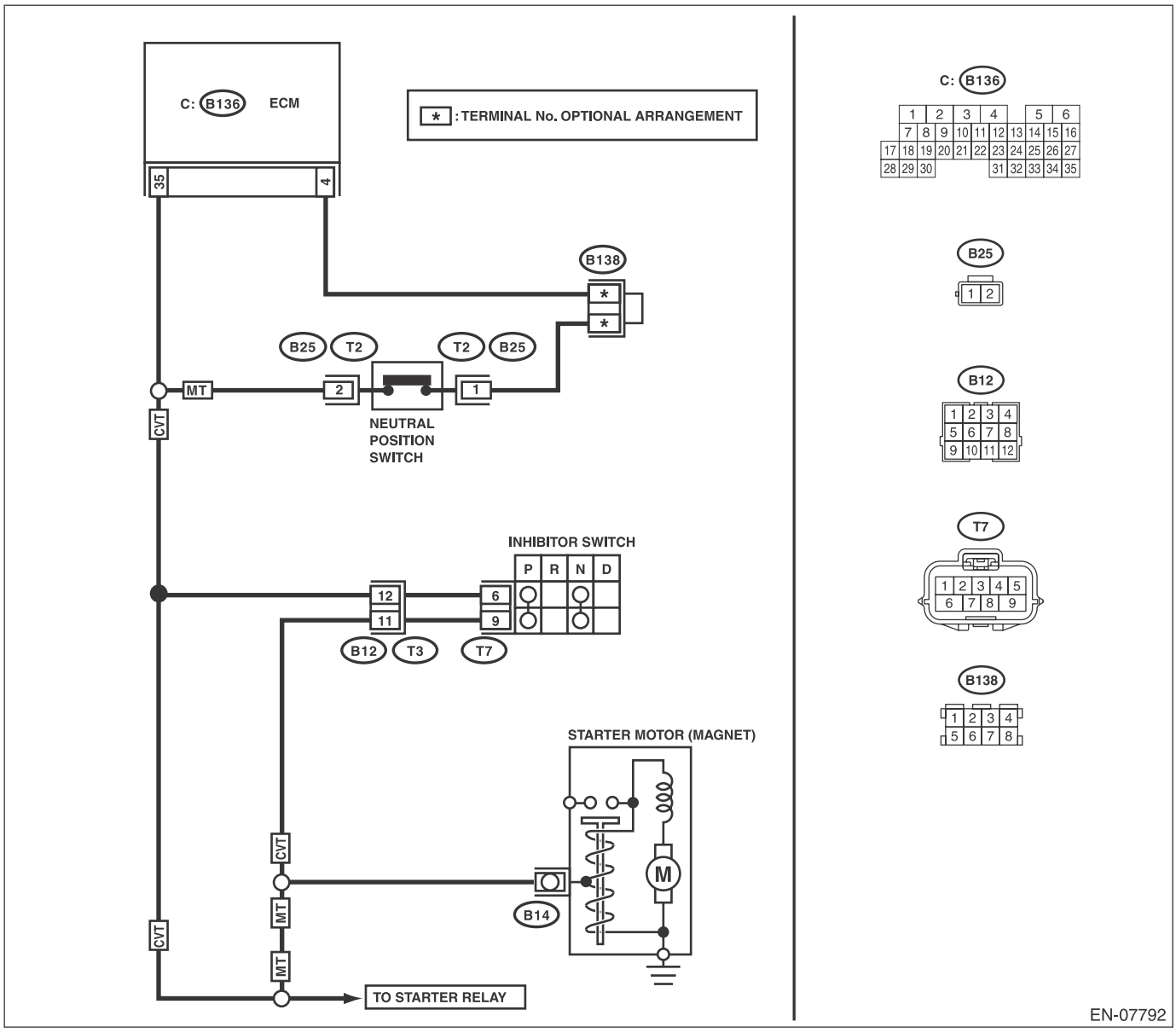

	Step	Check	Yes	No
1	**CHECK INPUT SIGNAL OF ECM.** 1) Turn the ignition switch to ON. 2) Place the shift lever in neutral. 3) Measure the voltage between ECM and chassis ground. ***Connector & terminal*** ***(B136) No. 35 (+) — Chassis ground (–):***	Is the voltage less than 1 V?	Repair the poor contact of ECM connector.	Go to step **2**.
2	**CHECK HARNESS BETWEEN ECM AND NEUTRAL POSITION SWITCH CONNECTOR.** 1) Turn the ignition switch to OFF. 2) Disconnect the connectors from ECM and neutral position switch. 3) Measure the resistance of harness between ECM and neutral position switch connector. ***Connector & terminal*** ***(B136) No. 35 — (B25) No. 2:*** ***(B136) No. 4 — (B25) No. 1:***	Is the resistance less than 1 Ω?	Go to step **3**.	Repair the harness and connector. NOTE: In this case, repair the following item: • Open circuit in harness between ECM and neutral position switch connector • Poor contact of joint connector
3	**CHECK NEUTRAL POSITION SWITCH.** 1) Place the shift lever in neutral. 2) Measure the resistance between neutral position switch terminals. ***Terminals*** ***No. 1 — No. 2:***	Is the resistance less than 1 Ω?	Repair the poor contact of neutral position switch connector.	Replace the neutral position switch. <Ref. to 6MT-36, Switches and Harness.>

CH:DTC P1152 O2 SENSOR CIRCUIT RANGE/PERFORMANCE (LOW) (BANK1 SENSOR1)

DTC DETECTING CONDITION:

- Detected when two consecutive driving cycles with fault occur.
- GENERAL DESCRIPTION <Ref. to GD(H4SO)-157, DTC P1152 O2 SENSOR CIRCUIT RANGE/PERFORMANCE (LOW) (BANK1 SENSOR1), Diagnostic Trouble Code (DTC) Detecting Criteria.>

CAUTION:

After servicing or replacing faulty parts, perform Clear Memory Mode <Ref. to EN(H4SO)(diag)-54, OPERATION, Clear Memory Mode.>, and Inspection Mode <Ref. to EN(H4SO)(diag)-42, PROCEDURE, Inspection Mode.>.

WIRING DIAGRAM:

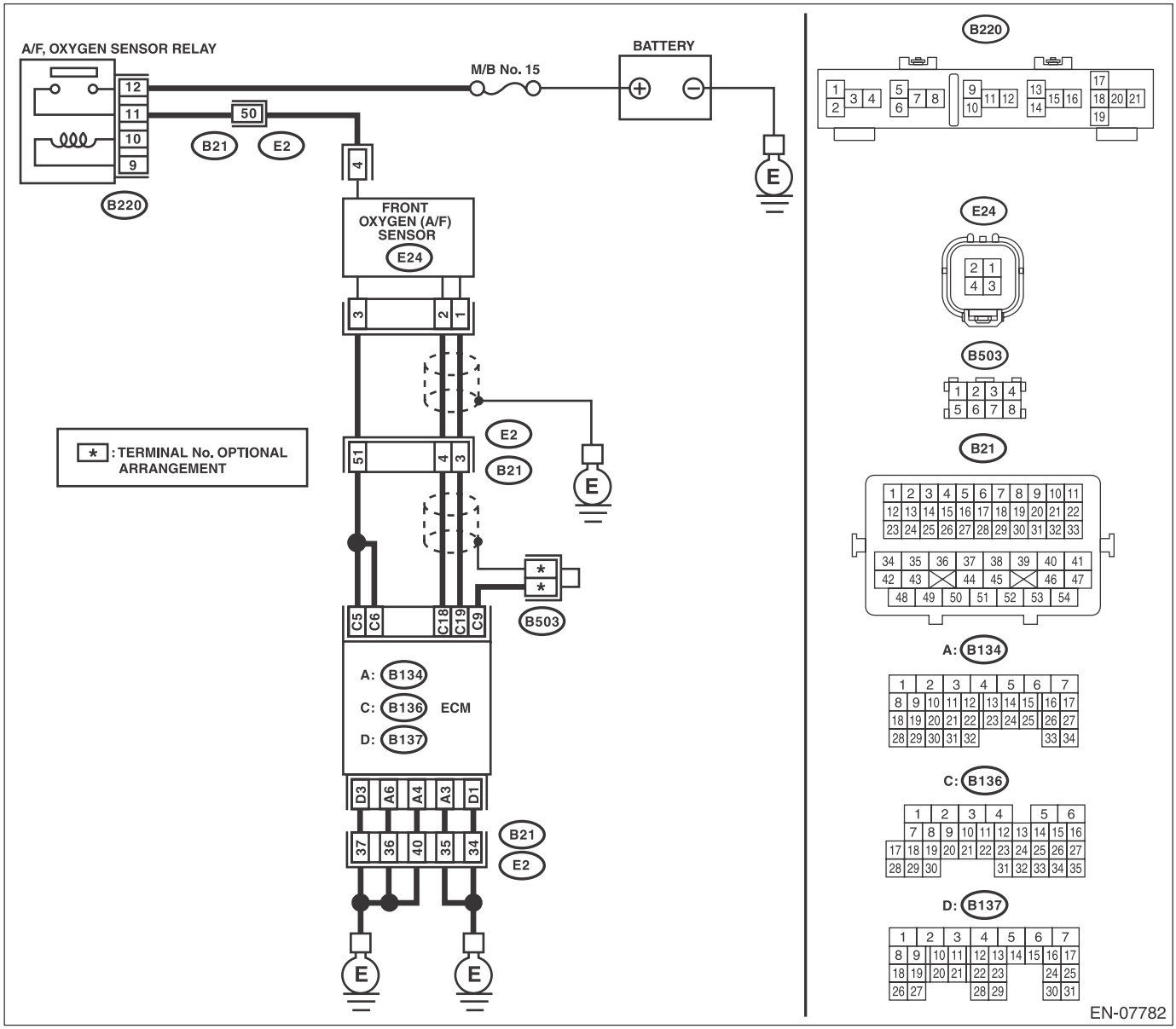

Step		Check	Yes	No
1	**CHECK FRONT OXYGEN (A/F) SENSOR CONNECTOR AND COUPLING CONNECTOR.**	Has water entered the connector?	Completely remove any water inside.	Go to step **2**.

	Step	Check	Yes	No
2	**CHECK HARNESS BETWEEN ECM AND FRONT OXYGEN (A/F) SENSOR CONNECTOR.** 1) Turn the ignition switch to OFF. 2) Disconnect the connectors from ECM and front oxygen (A/F) sensor. 3) Measure the resistance of harness between ECM and front oxygen (A/F) sensor connector. ***Connector & terminal*** ***(B136) No. 18 — (E24) No. 2:*** ***(B136) No. 19 — (E24) No. 1:***	Is the resistance less than 1 Ω?	Go to step **3**.	Repair the harness and connector. NOTE: In this case, repair the following item: • Open circuit in harness between ECM and front oxygen (A/F) sensor connector • Poor contact of coupling connector
3	**CHECK FOR POOR CONTACT.** Check for poor contact of the front oxygen (A/F) sensor connector.	Is there poor contact of front oxygen (A/F) sensor connector?	Repair the poor contact of front oxygen (A/F) sensor connector.	Replace the front oxygen (A/F) sensor. <Ref. to FU(H4SO)-35, Front Oxygen (A/F) Sensor.>

CI: DTC P1153 O2 SENSOR CIRCUIT RANGE/PERFORMANCE (HIGH) (BANK1 SENSOR1)

DTC DETECTING CONDITION:

- Detected when two consecutive driving cycles with fault occur.
- GENERAL DESCRIPTION <Ref. to GD(H4SO)-159, DTC P1153 O2 SENSOR CIRCUIT RANGE/PERFORMANCE (HIGH) (BANK1 SENSOR1), Diagnostic Trouble Code (DTC) Detecting Criteria.>

CAUTION:

After servicing or replacing faulty parts, perform Clear Memory Mode <Ref. to EN(H4SO)(diag)-54, OPERATION, Clear Memory Mode.>, and Inspection Mode <Ref. to EN(H4SO)(diag)-42, PROCEDURE, Inspection Mode.>.

WIRING DIAGRAM:

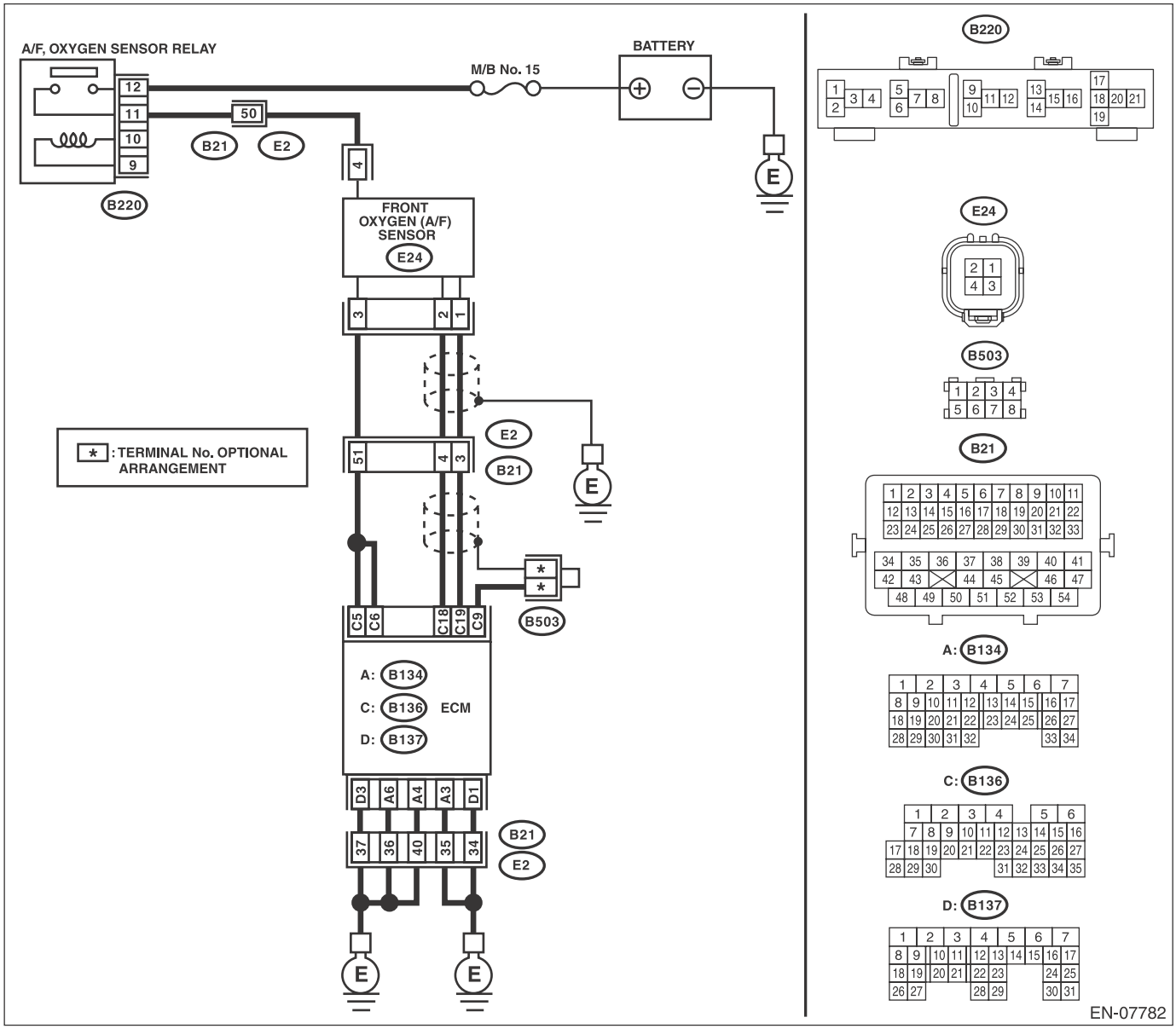

Step		Check	Yes	No
1	**CHECK FRONT OXYGEN (A/F) SENSOR CONNECTOR AND COUPLING CONNECTOR.**	Has water entered the connector?	Completely remove any water inside.	Go to step **2**.

	Step	Check	Yes	No
2	**CHECK HARNESS BETWEEN ECM AND FRONT OXYGEN (A/F) SENSOR CONNECTOR.** 1) Turn the ignition switch to OFF. 2) Disconnect the connector from ECM. 3) Measure the resistance between ECM and chassis ground. ***Connector & terminal*** ***(B136) No. 18 — Chassis ground:*** ***(B136) No. 19 — Chassis ground:***	Is the resistance 1 MΩ or more?	Go to step **3**.	Repair the ground short circuit of harness between ECM and front oxygen (A/F) sensor connector.
3	**CHECK OUTPUT SIGNAL FOR ECM.** 1) Connect the connector to ECM. 2) Turn the ignition switch to ON. 3) Measure the voltage between ECM and chassis ground. ***Connector & terminal*** ***(B136) No. 19 (+) — Chassis ground (–):***	Is the voltage 4.5 V or more?	Go to step **5**.	Go to step **4**.
4	**CHECK OUTPUT SIGNAL FOR ECM.** Measure the voltage between ECM and chassis ground. ***Connector & terminal*** ***(B136) No. 18 (+) — Chassis ground (–):***	Is the voltage 4.95 V or more?	Go to step **5**.	Replace the front oxygen (A/F) sensor. <Ref. to FU(H4SO)-35, Front Oxygen (A/F) Sensor.>
5	**CHECK OUTPUT SIGNAL FOR ECM.** Measure the voltage between ECM and chassis ground. ***Connector & terminal*** ***(B136) No. 18 (+) — Chassis ground (–):*** ***(B136) No. 19 (+) — Chassis ground (–):***	Is the voltage 8 V or more?	Repair the short circuit of harness to power supply between ECM and front oxygen (A/F) sensor connector. After repair, replace the ECM. <Ref. to FU(H4SO)-39, Engine Control Module (ECM).>	Repair the poor contact of ECM connector.

CJ:DTC P1160 RETURN SPRING FAILURE

NOTE:
For the diagnostic procedure, refer to DTC P2101. <Ref. to EN(H4SO)(diag)-276, DTC P2101 THROTTLE ACTUATOR CONTROL MOTOR CIRCUIT RANGE/PERFORMANCE, Diagnostic Procedure with Diagnostic Trouble Code (DTC).>

CK:DTC P1443 VENT CONTROL SOLENOID VALVE FUNCTION PROBLEM

DTC DETECTING CONDITION:

- Immediately at fault recognition
- GENERAL DESCRIPTION <Ref. to GD(H4SO)-162, DTC P1443 VENT CONTROL SOLENOID VALVE FUNCTION PROBLEM, Diagnostic Trouble Code (DTC) Detecting Criteria.>

TROUBLE SYMPTOM:

Improper fuel supply

CAUTION:

After servicing or replacing faulty parts, perform Clear Memory Mode <Ref. to EN(H4SO)(diag)-54, OPERATION, Clear Memory Mode.>, and Inspection Mode <Ref. to EN(H4SO)(diag)-42, PROCEDURE, Inspection Mode.>.

WIRING DIAGRAM:

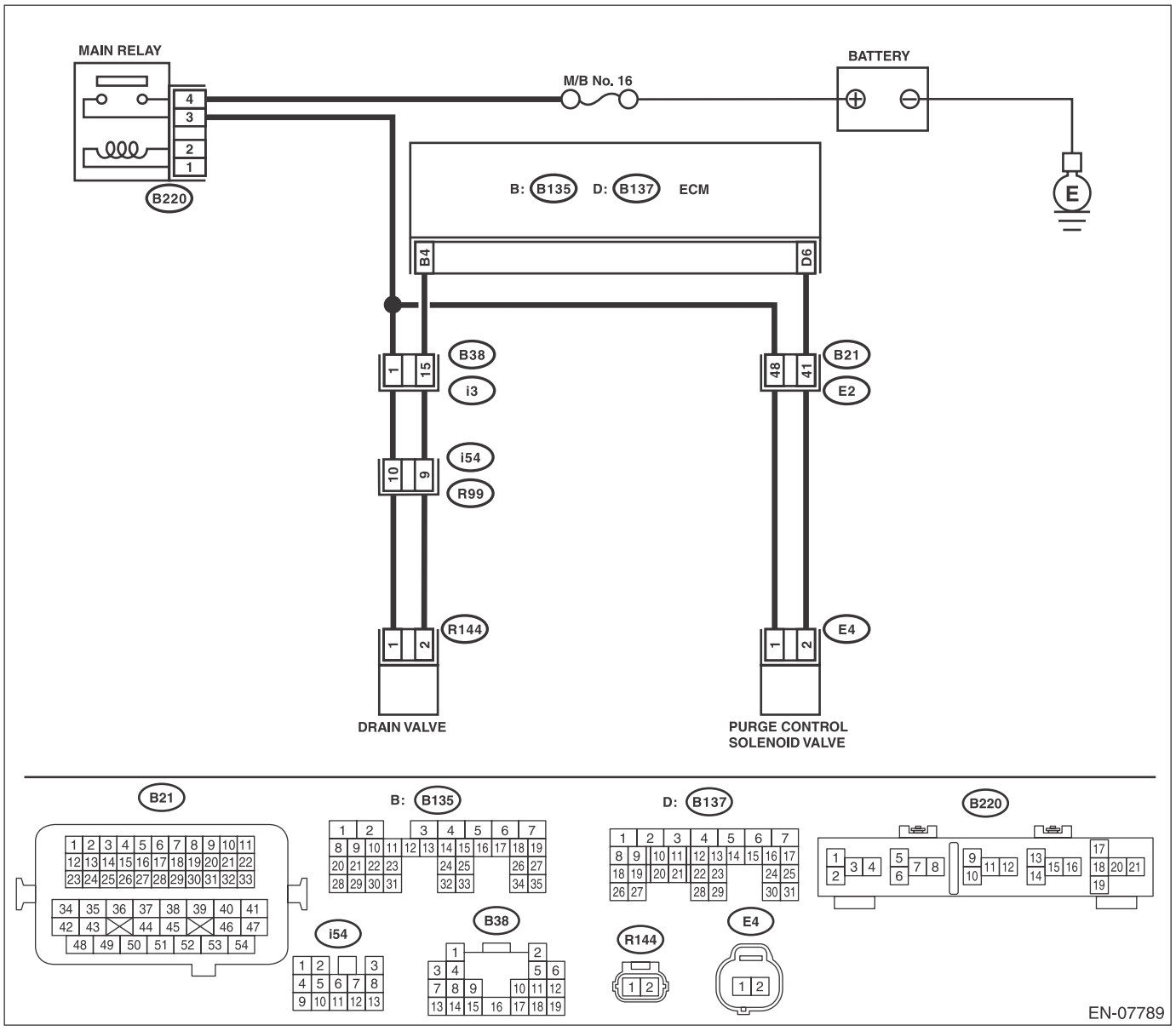

	Step	Check	Yes	No
1	**CHECK FOR ANY OTHER DTC ON DISPLAY.**	Is any other DTC displayed?	Check the appropriate DTC using the “List of Diagnostic Trouble Code (DTC)”. <Ref. to EN(H4SO)(diag)-79, List of Diagnostic Trouble Code (DTC).>	Go to step **2**.
2	**CHECK DRAIN HOSE.** Check the drain hose for clogging.	Is there clogging in the drain hose?	Replace the drain hose.	Go to step **3**.
3	**CHECK DRAIN VALVE OPERATION.** 1) Turn the ignition switch to OFF. 2) Install the delivery (test) mode fuse. 3) Turn the ignition switch to ON. 4) Operate the drain valve. NOTE: Drain valve can be operated using the Subaru Select Monitor. For detailed procedures, refer to “SYSTEM OPERATION CHECK MODE”. <Ref. to EN(H4SO)(diag)-55, System Operation Check Mode.>	Does the drain valve operate?	Repair the poor contact of ECM connector.	Replace the drain valve. <Ref. to EC(H4SO)-18, Drain Valve.>

CL:DTC P1492 EGR SOLENOID VALVE SIGNAL #1 CIRCUIT MALFUNCTION (LOW INPUT)

NOTE:
For the diagnostic procedure, refer to DTC P1498. <Ref. to EN(H4SO)(diag)-245, DTC P1498 EGR SOLENOID VALVE SIGNAL #4 CIRCUIT MALFUNCTION (LOW INPUT), Diagnostic Procedure with Diagnostic Trouble Code (DTC).>

CM:DTC P1493 EGR SOLENOID VALVE SIGNAL #1 CIRCUIT MALFUNCTION (HIGH INPUT)

NOTE:
For the diagnostic procedure, refer to DTC P1499. <Ref. to EN(H4SO)(diag)-248, DTC P1499 EGR SOLENOID VALVE SIGNAL #4 CIRCUIT MALFUNCTION (HIGH INPUT), Diagnostic Procedure with Diagnostic Trouble Code (DTC).>

CN:DTC P1494 EGR SOLENOID VALVE SIGNAL #2 CIRCUIT MALFUNCTION (LOW INPUT)

NOTE:
For the diagnostic procedure, refer to DTC P1498. <Ref. to EN(H4SO)(diag)-245, DTC P1498 EGR SOLENOID VALVE SIGNAL #4 CIRCUIT MALFUNCTION (LOW INPUT), Diagnostic Procedure with Diagnostic Trouble Code (DTC).>

CO:DTC P1495 EGR SOLENOID VALVE SIGNAL #2 CIRCUIT MALFUNCTION (HIGH INPUT)

NOTE:
For the diagnostic procedure, refer to DTC P1499. <Ref. to EN(H4SO)(diag)-248, DTC P1499 EGR SOLENOID VALVE SIGNAL #4 CIRCUIT MALFUNCTION (HIGH INPUT), Diagnostic Procedure with Diagnostic Trouble Code (DTC).>

CP:DTC P1496 EGR SOLENOID VALVE SIGNAL #3 CIRCUIT MALFUNCTION (LOW INPUT)

NOTE:
For the diagnostic procedure, refer to DTC P1498. <Ref. to EN(H4SO)(diag)-245, DTC P1498 EGR SOLENOID VALVE SIGNAL #4 CIRCUIT MALFUNCTION (LOW INPUT), Diagnostic Procedure with Diagnostic Trouble Code (DTC).>

CQ:DTC P1497 EGR SOLENOID VALVE SIGNAL #3 CIRCUIT MALFUNCTION (HIGH INPUT)

NOTE:
For the diagnostic procedure, refer to DTC P1499. <Ref. to EN(H4SO)(diag)-248, DTC P1499 EGR SOLENOID VALVE SIGNAL #4 CIRCUIT MALFUNCTION (HIGH INPUT), Diagnostic Procedure with Diagnostic Trouble Code (DTC).>

CR:DTC P1498 EGR SOLENOID VALVE SIGNAL #4 CIRCUIT MALFUNCTION (LOW INPUT)

DTC DETECTING CONDITION:

- Immediately at fault recognition
- GENERAL DESCRIPTION <Ref. to GD(H4SO)-164, DTC P1492 EGR SOLENOID VALVE SIGNAL #1 CIRCUIT MALFUNCTION (LOW INPUT), Diagnostic Trouble Code (DTC) Detecting Criteria.> <Ref. to GD(H4SO)-168, DTC P1494 EGR SOLENOID VALVE SIGNAL #2 CIRCUIT MALFUNCTION (LOW INPUT), Diagnostic Trouble Code (DTC) Detecting Criteria.> <Ref. to GD(H4SO)-168, DTC P1496 EGR SOLENOID VALVE SIGNAL #3 CIRCUIT MALFUNCTION (LOW INPUT), Diagnostic Trouble Code (DTC) Detecting Criteria.> <Ref. to GD(H4SO)-168, DTC P1498 EGR SOLENOID VALVE SIGNAL #4 CIRCUIT MALFUNCTION (LOW INPUT), Diagnostic Trouble Code (DTC) Detecting Criteria.>

TROUBLE SYMPTOM:

- Improper idling
- Poor driving performance
- Engine breathing

CAUTION:

After servicing or replacing faulty parts, perform Clear Memory Mode <Ref. to EN(H4SO)(diag)-54, OPERATION, Clear Memory Mode.>, and Inspection Mode <Ref. to EN(H4SO)(diag)-42, PROCEDURE, Inspection Mode.>.

WIRING DIAGRAM:

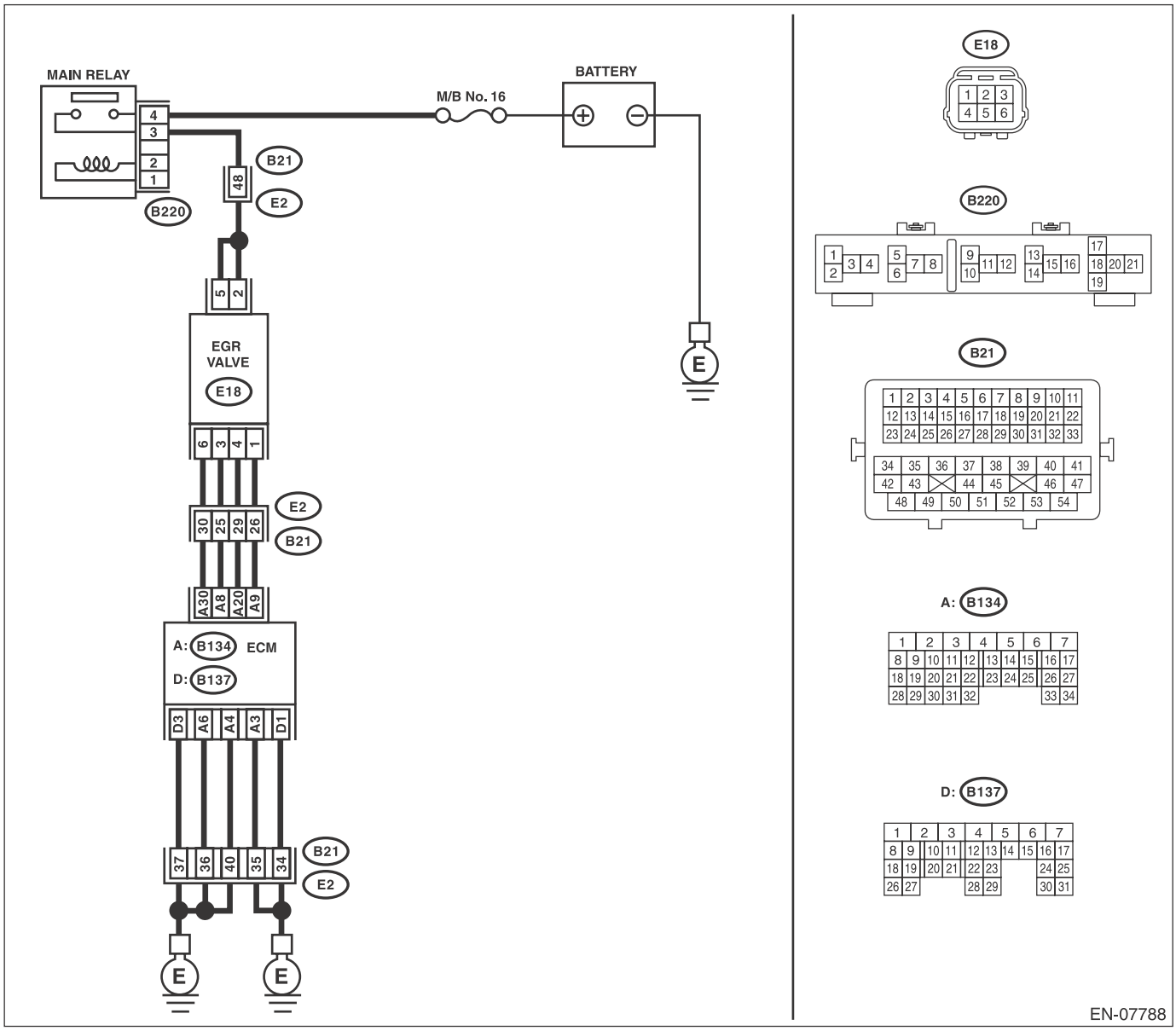

Step		Check	Yes	No
1	**CHECK POWER SUPPLY TO EGR VALVE.** 1) Turn the ignition switch to OFF. 2) Disconnect the connector from EGR valve. 3) Turn the ignition switch to ON. 4) Measure the voltage between EGR valve connector and engine ground. ***Connector & terminal*** ***(E18) No. 2 (+) — Engine ground (–):*** ***(E18) No. 5 (+) — Engine ground (–):***	Is the voltage 10 V or more?	Go to step **2**.	Repair the harness and connector. NOTE: In this case, repair the following item: • Open circuit in harness between EGR valve and main relay connector • Poor contact of coupling connector

	Step	Check	Yes	No
2	**CHECK HARNESS BETWEEN ECM AND EGR VALVE CONNECTOR.** 1) Turn the ignition switch to OFF. 2) Disconnect the connector from ECM. 3) Measure the resistance between ECM and EGR valve connector. ***Connector & terminal*** ***DTC P1492; (B134) No. 8 — (E18) No. 3:*** ***DTC P1494; (B134) No. 9 — (E18) No. 1:*** ***DTC P1496; (B134) No. 20 — (E18) No. 4:*** ***DTC P1498; (B134) No. 30 — (E18) No. 6:***	Is the resistance less than 1 Ω?	Go to step **3**.	Repair the harness and connector. NOTE: In this case, repair the following item: • Open circuit in harness between ECM and EGR valve connector • Poor contact of coupling connector
3	**CHECK HARNESS BETWEEN ECM AND EGR VALVE CONNECTOR.** 1) Disconnect the connector from ECM. 2) Measure the resistance between ECM and chassis ground. ***Connector & terminal*** ***DTC P1492; (B134) No. 8 — Chassis ground:*** ***DTC P1494; (B134) No. 9 — Chassis ground:*** ***DTC P1496; (B134) No. 20 — Chassis ground:*** ***DTC P1498; (B134) No. 30 — Chassis ground:***	Is the resistance 1 MΩ or more?	Go to step **4**.	Repair the ground short in harness between ECM and EGR valve connector.
4	**CHECK FOR POOR CONTACT.** Check for poor contact of ECM and EGR valve connector.	Is there poor contact of ECM or EGR valve connector?	Repair the poor contact of ECM or EGR valve connector.	Replace the EGR valve. <Ref. to FU(H4SO)-31, EGR Valve.>

CS:DTC P1499 EGR SOLENOID VALVE SIGNAL #4 CIRCUIT MALFUNCTION (HIGH INPUT)

DTC DETECTING CONDITION:

- Immediately at fault recognition
- GENERAL DESCRIPTION <Ref. to GD(H4SO)-166, DTC P1493 EGR SOLENOID VALVE SIGNAL #1 CIRCUIT MALFUNCTION (HIGH INPUT), Diagnostic Trouble Code (DTC) Detecting Criteria.> <Ref. to GD(H4SO)-168, DTC P1495 EGR SOLENOID VALVE SIGNAL #2 CIRCUIT MALFUNCTION (HIGH INPUT), Diagnostic Trouble Code (DTC) Detecting Criteria.> <Ref. to GD(H4SO)-168, DTC P1497 EGR SOLENOID VALVE SIGNAL #3 CIRCUIT MALFUNCTION (HIGH INPUT), Diagnostic Trouble Code (DTC) Detecting Criteria.> <Ref. to GD(H4SO)-168, DTC P1499 EGR SOLENOID VALVE SIGNAL #4 CIRCUIT MALFUNCTION (HIGH INPUT), Diagnostic Trouble Code (DTC) Detecting Criteria.>

TROUBLE SYMPTOM:

- Improper idling
- Poor driving performance
- Engine breathing

CAUTION:

After servicing or replacing faulty parts, perform Clear Memory Mode <Ref. to EN(H4SO)(diag)-54, OPERATION, Clear Memory Mode.>, and Inspection Mode <Ref. to EN(H4SO)(diag)-42, PROCEDURE, Inspection Mode.>.

WIRING DIAGRAM:

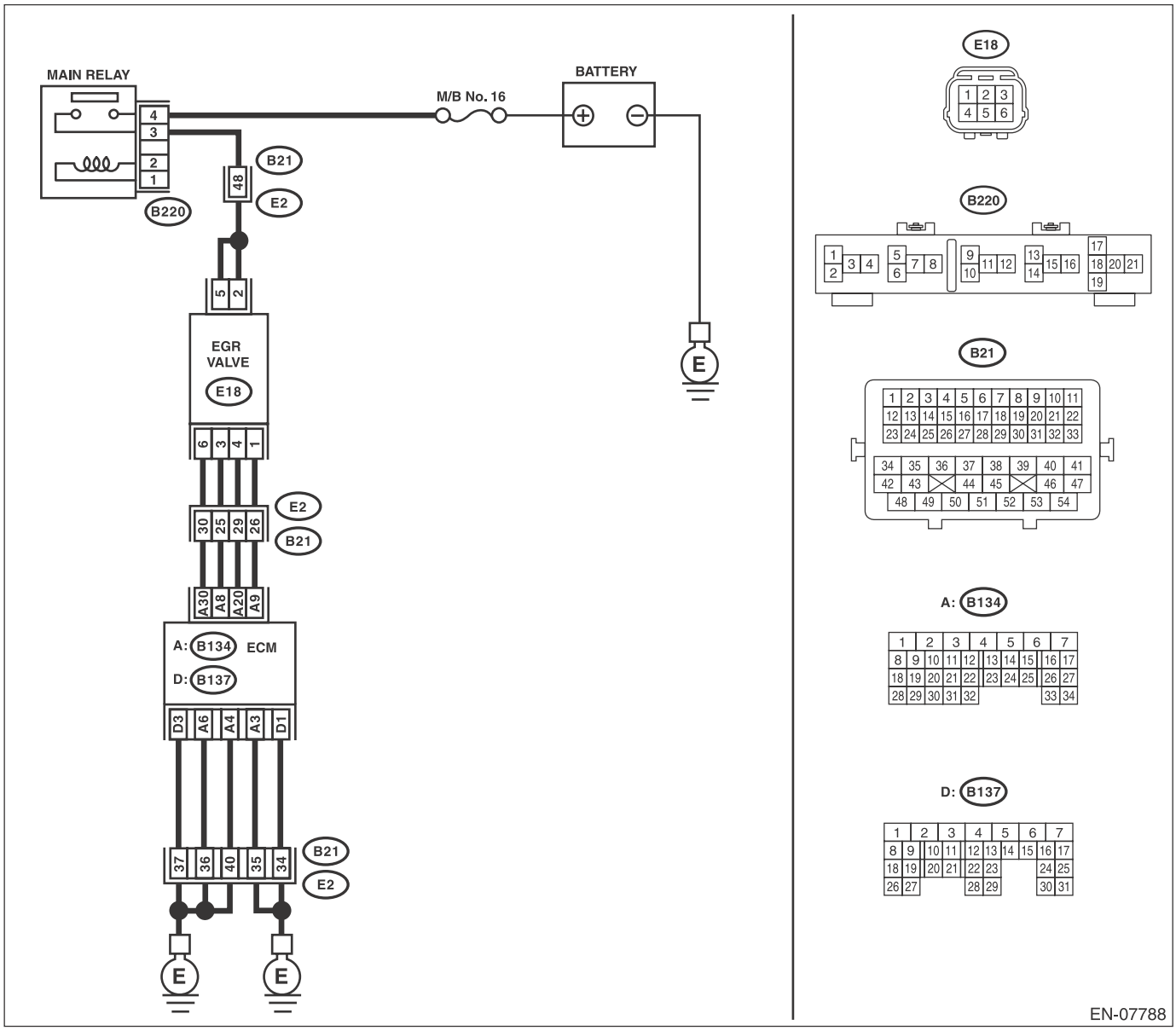

Step		Check	Yes	No
1	**CHECK HARNESS BETWEEN ECM AND EGR VALVE CONNECTOR.** 1) Turn the ignition switch to OFF. 2) Disconnect the connectors from ECM and EGR valve. 3) Turn the ignition switch to ON. 4) Measure the voltage between ECM and chassis ground. ***Connector & terminal*** ***DTC P1493; (B134) No. 8 (+) — Chassis ground (–):*** ***DTC P1495; (B134) No. 9 (+) — Chassis ground (–):*** ***DTC P1497; (B134) No. 20 (+) — Chassis ground (–):*** ***DTC P1499; (B134) No. 30 (+) — Chassis ground (–):***		Is the voltage 10 V or more?	Repair the short circuit to power in the harness between the ECM and EGR valve connectors.	Go to step **2**.

	Step	Check	Yes	No
2	**CHECK EGR VALVE.** Measure the resistance between EGR valve terminals. ***Terminals*** ***DTC P1493; No. 2 — No. 3:*** ***DTC P1493; No. 5 — No. 3:*** ***DTC P1495; No. 2 — No. 1:*** ***DTC P1495; No. 5 — No. 1:*** ***DTC P1497; No. 2 — No. 4:*** ***DTC P1497; No. 5 — No. 4:*** ***DTC P1499; No. 2 — No. 6:*** ***DTC P1499; No. 5 — No. 6:***	Is the resistance 20 Ω or more?	Repair the poor contact of ECM connector.	Replace the EGR valve. <Ref. to FU(H4SO)-31, EGR Valve.>

CT:DTC P1518 STARTER SWITCH CIRCUIT LOW INPUT

DTC DETECTING CONDITION:

- Immediately at fault recognition
- GENERAL DESCRIPTION <Ref. to GD(H4SO)-169, DTC P1518 STARTER SWITCH CIRCUIT LOW INPUT, Diagnostic Trouble Code (DTC) Detecting Criteria.>

CAUTION:

After servicing or replacing faulty parts, perform Clear Memory Mode <Ref. to EN(H4SO)(diag)-54, OPERATION, Clear Memory Mode.>, and Inspection Mode <Ref. to EN(H4SO)(diag)-42, PROCEDURE, Inspection Mode.>.

WIRING DIAGRAM:

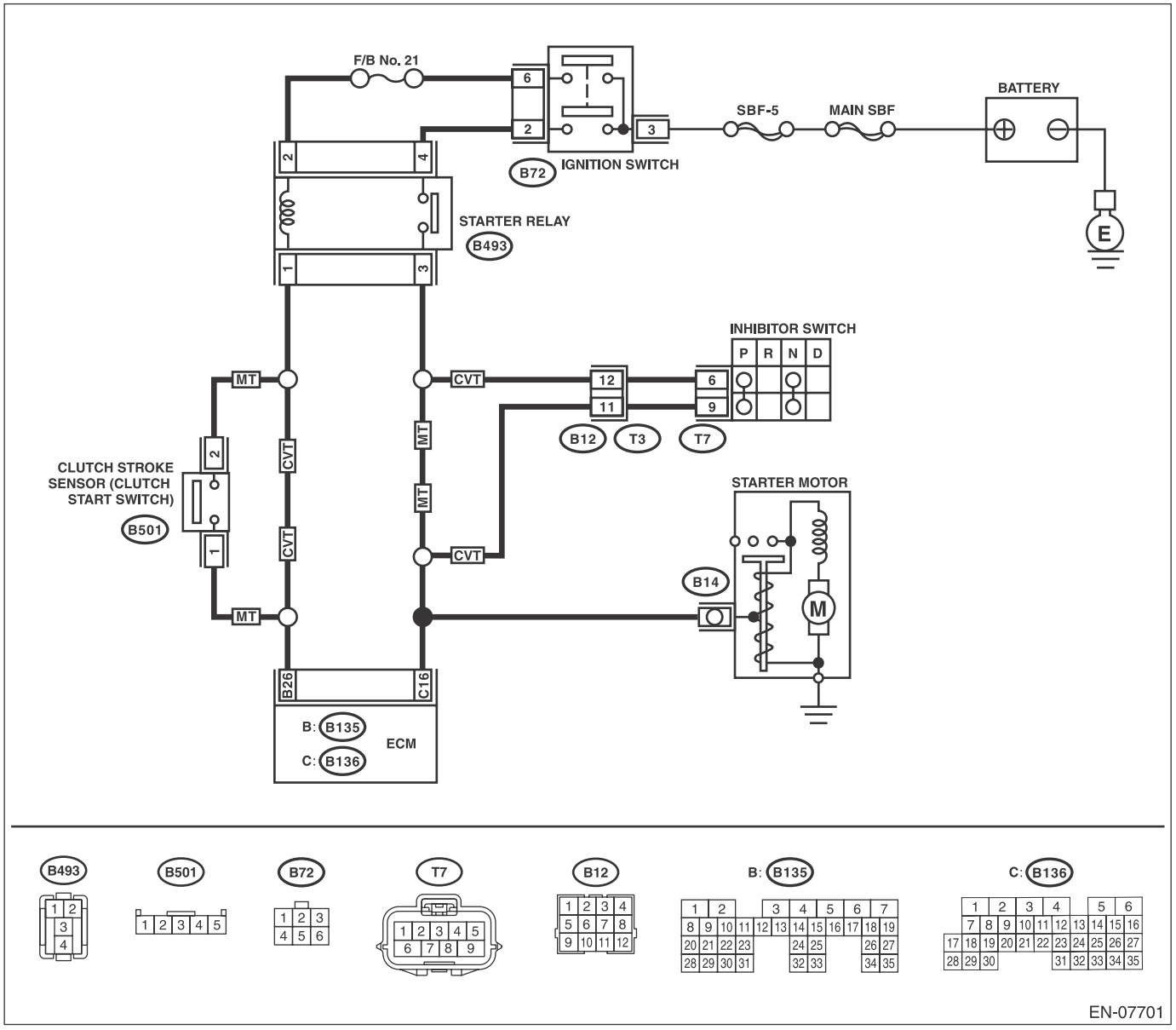

	Step	Check	Yes	No
1	**CHECK FOR ANY OTHER DTC ON DISPLAY.**	Is any other DTC displayed?	Check DTC using "List of Diagnostic Trouble Code (DTC)". <Ref. to EN(H4SO)(diag)-79, List of Diagnostic Trouble Code (DTC).>	Go to step **2**.
2	**CHECK HARNESS BETWEEN ECM AND STARTER RELAY CONNECTOR.** 1) Turn the ignition switch to OFF. 2) Remove the starter relay. 3) Disconnect the connectors from ECM and starter motor. 4) Measure the resistance of harness between ECM and starter relay connector. ***Connector & terminal*** ***(B136) No. 16 — (B493) No. 3:*** NOTE: For CVT model, place the select lever in "P" range or "N" range.	Is the resistance less than 1 Ω?	Go to step **3**.	NOTE: Check the following item and repair or replace if necessary. • Open circuit of harness between ECM and starter relay connector • Poor contact of coupling connector
3	**CHECK HARNESS BETWEEN ECM AND STARTER RELAY CONNECTOR.** Measure the resistance between ECM and chassis ground. ***Connector & terminal*** ***(B136) No. 16 — Chassis ground:***	Is the resistance 1 MΩ or more?	Repair the poor contact of ECM connector.	Repair the short circuit to ground in harness between ECM and starter relay connector.

CU:DTC P1560 BACK-UP VOLTAGE CIRCUIT MALFUNCTION

DTC DETECTING CONDITION:

- Immediately at fault recognition
- GENERAL DESCRIPTION <Ref. to GD(H4SO)-170, DTC P1560 BACK-UP VOLTAGE CIRCUIT MALFUNCTION, Diagnostic Trouble Code (DTC) Detecting Criteria.>

CAUTION:

After servicing or replacing faulty parts, perform Clear Memory Mode <Ref. to EN(H4SO)(diag)-54, OPERATION, Clear Memory Mode.>, and Inspection Mode <Ref. to EN(H4SO)(diag)-42, PROCEDURE, Inspection Mode.>.

WIRING DIAGRAM:

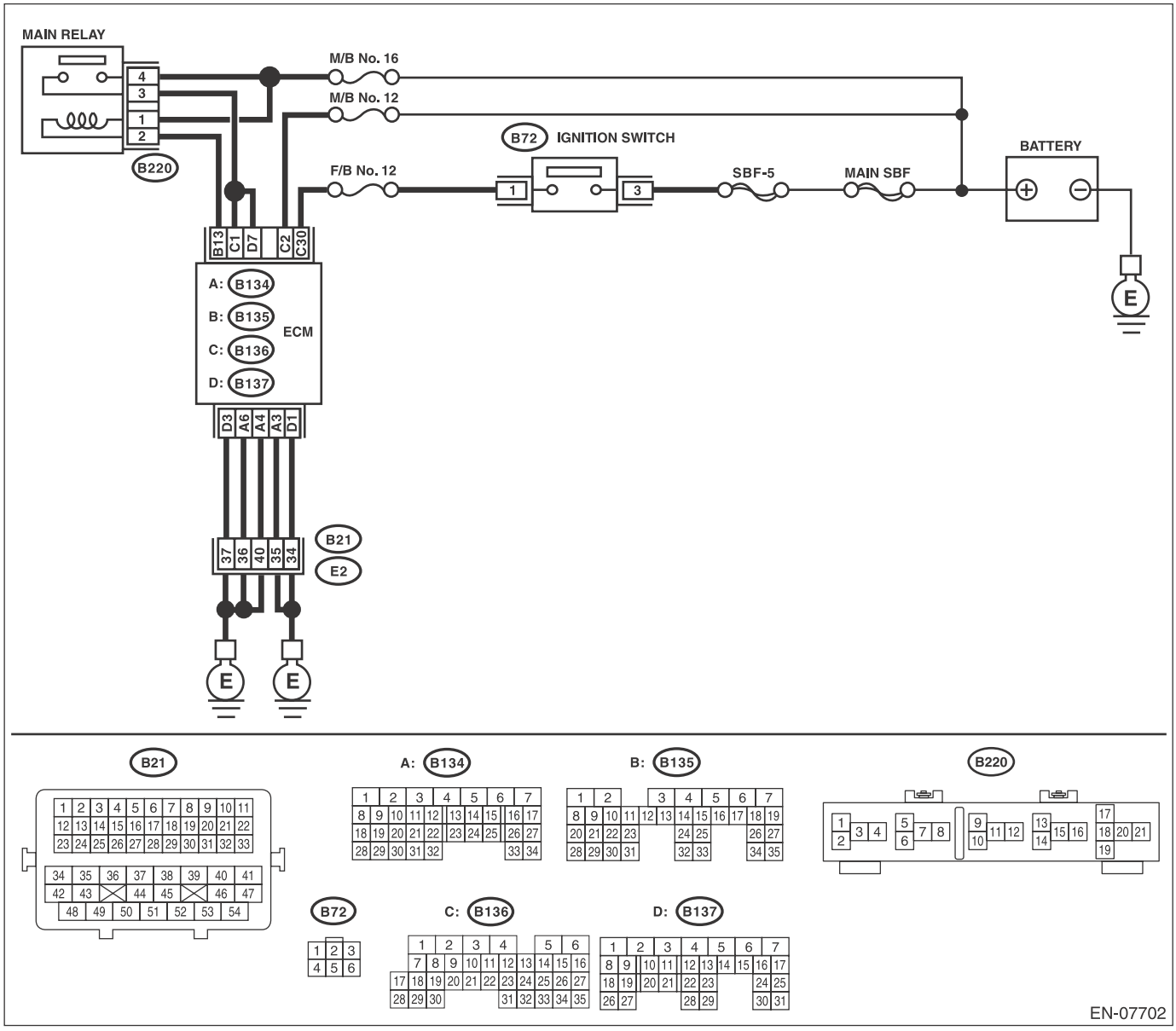

Step		Check	Yes	No
1	**CHECK INPUT SIGNAL OF ECM.** 1) Turn the ignition switch to OFF. 2) Measure the voltage between ECM and chassis ground. ***Connector & terminal*** ***(B136) No. 2 (+) — Chassis ground (–):***	Is the voltage 10 V or more?	Repair the poor contact of ECM connector.	Go to step **2**.

Step		Check	Yes	No
2	**CHECK HARNESS BETWEEN ECM AND MAIN FUSE BOX CONNECTOR.** 1) Disconnect the connector from ECM. 2) Measure the resistance between ECM and chassis ground. ***Connector & terminal*** ***(B136) No. 2 — Chassis ground:***	Is the resistance 1 MΩ or more?	Go to step **3**.	Repair the ground short circuit of harness between ECM and battery terminal.
3	**CHECK M/B FUSE NO. 12 (MAIN FUSE BOX).**	Is the fuse blown out?	Replace the fuse.	Repair the harness and connector. NOTE: In this case, repair the following item: • Open circuit in harness between ECM and battery • Poor contact of ECM connector • Poor contact of battery terminal

CV:DTC P1602 CONTROL MODULE PROGRAMMING ERROR

DTC DETECTING CONDITION:

- Detected when two consecutive driving cycles with fault occur.
- GENERAL DESCRIPTION <Ref. to GD(H4SO)-172, DTC P1602 CONTROL MODULE PROGRAMMING ERROR, Diagnostic Trouble Code (DTC) Detecting Criteria.>

TROUBLE SYMPTOM:

- Engine keeps running at higher speed than specified idle speed.
- Engine keeps running at a lower speed than the specified idle speed.
- Engine stalls.

CAUTION:

After servicing or replacing faulty parts, perform Clear Memory Mode <Ref. to EN(H4SO)(diag)-54, OPERATION, Clear Memory Mode.>, and Inspection Mode <Ref. to EN(H4SO)(diag)-42, PROCEDURE, Inspection Mode.>.

WIRING DIAGRAM:

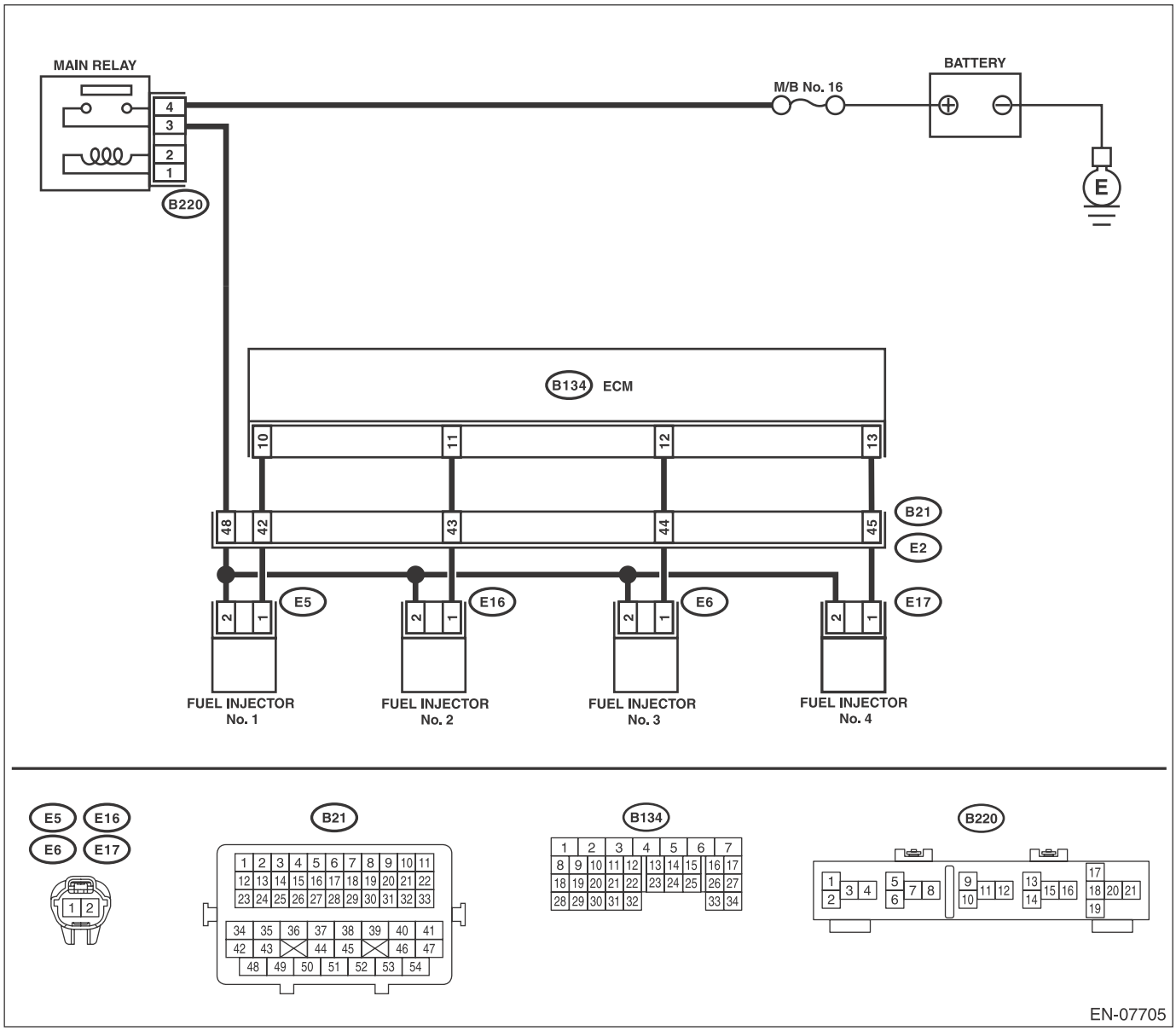

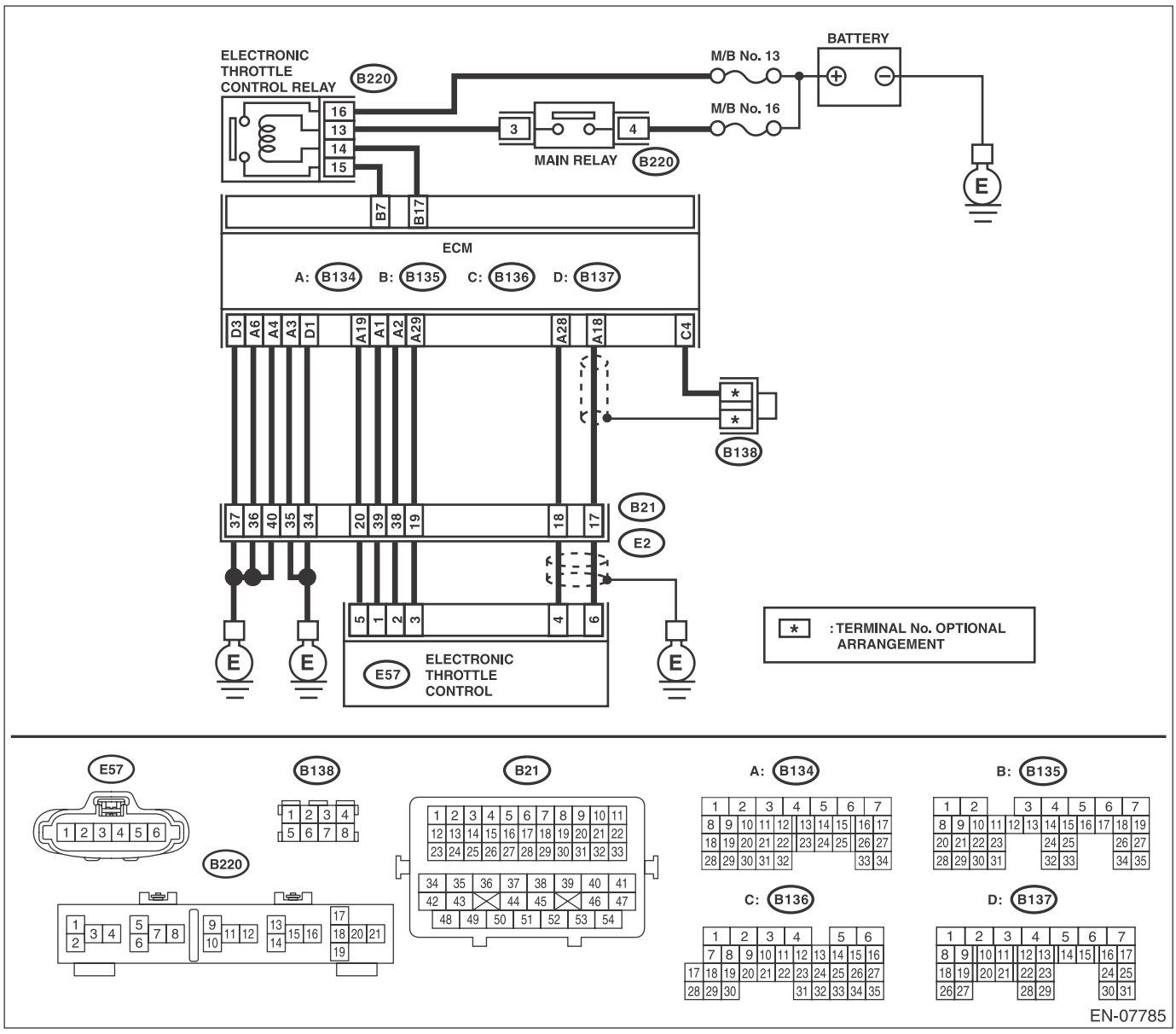

Step		Check	Yes	No
1	**CHECK FOR ANY OTHER DTC ON DISPLAY.**	Is any other DTC displayed?	Check the appropriate DTC using the “List of Diagnostic Trouble Code (DTC)”. <Ref. to EN(H4SO)(diag)-79, List of Diagnostic Trouble Code (DTC).>	Go to step **2**.
2	**CHECK ENGINE OIL.**	Is there a proper amount of engine oil?	Go to step **3**.	Replace engine oil. <Ref. to LU(H4SO)-12, REPLACEMENT, Engine Oil.>
3	**CHECK EXHAUST SYSTEM.**	Are there holes or loose bolts on exhaust system?	Repair the exhaust system.	Go to step **4**.

	Step	Check	Yes	No
4	**CHECK AIR INTAKE SYSTEM.**	Are there holes, loose bolts or disconnection of hose on air intake system?	Repair the air intake system.	Go to step **5**.
5	**CHECK FUEL PRESSURE.** **WARNING:** **Place "NO OPEN FLAMES" signs near the working area.** **CAUTION:** **Be careful not to spill fuel.** Measure the fuel pressure. <Ref. to ME(H4SO)-28, INSPECTION, Fuel Pressure.> **CAUTION:** **Release fuel pressure before removing the fuel pressure gauge.**	Is the measured value 339.5 — 360.5 kPa (3.5 — 3.7 kg/cm^2, 49 — 52 psi)?	Go to step **6**.	Repair the following item. Fuel pressure is too high: • Clogged fuel line or bent hose Fuel pressure is too low: • Improper fuel pump discharge • Clogged fuel line
6	**CHECK ENGINE COOLANT TEMPERATURE SENSOR.** 1) Start the engine and warm up completely. 2) Read the data of engine coolant temperature sensor signal using Subaru Select Monitor or general scan tool. NOTE: • Subaru Select Monitor For detailed operation procedures, refer to "READ CURRENT DATA FOR ENGINE". <Ref. to EN(H4SO)(diag)-34, Subaru Select Monitor.> • General scan tool For detailed operation procedures, refer to the general scan tool operation manual.	Is the temperature 75°C (167°F) or more?	Go to step **7**.	Replace the engine coolant temperature sensor. <Ref. to FU(H4SO)-21, Engine Coolant Temperature Sensor.>
7	**CHECK MASS AIR FLOW AND INTAKE AIR TEMPERATURE SENSOR.** 1) Start the engine and warm up engine until coolant temperature is higher than 75°C (167°F). 2) For CVT models, set the select lever to "P" range or "N" range, and for MT models, place the shift lever in the neutral position. 3) Turn the A/C switch to OFF. 4) Turn all the accessory switches to OFF. 5) Read the data of mass air flow and intake air temperature sensor signal using Subaru Select Monitor or general scan tool. NOTE: • Subaru Select Monitor For detailed operation procedures, refer to "READ CURRENT DATA FOR ENGINE". <Ref. to EN(H4SO)(diag)-34, Subaru Select Monitor.> • General scan tool For detailed operation procedures, refer to the general scan tool operation manual.	Is the measured value 2.0 — 5.0 g/s (0.26 — 0.66 lb/m)?	Go to step **8**.	Replace the mass air flow and intake air temperature sensor. <Ref. to FU(H4SO)-29, Mass Air Flow and Intake Air Temperature Sensor.>

	Step	Check	Yes	No
8	**CHECK MASS AIR FLOW AND INTAKE AIR TEMPERATURE SENSOR.** 1) Start the engine and warm up engine until coolant temperature is higher than 75°C (167°F). 2) For CVT models, set the select lever to "P" range or "N" range, and for MT models, place the shift lever in the neutral position. 3) Turn the A/C switch to OFF. 4) Turn all the accessory switches to OFF. 5) Open the front hood. 6) Measure the ambient temperature. 7) Read the data of mass air flow and intake air temperature sensor signal using Subaru Select Monitor or general scan tool. NOTE: • Subaru Select Monitor For detailed operation procedures, refer to "READ CURRENT DATA FOR ENGINE". <Ref. to EN(H4SO)(diag)-34, Subaru Select Monitor.> • General scan tool For detailed operation procedures, refer to the general scan tool operation manual.	Subtract ambient temperature from intake air temperature. Is the obtained value –10 — 50°C (–18 — 90°F)?	Go to step **9**.	Check the mass air flow and intake air temperature sensor. <Ref. to FU(H4SO)-29, Mass Air Flow and Intake Air Temperature Sensor.>
9	**CHECK OUTPUT SIGNAL OF ECM.** 1) Turn the ignition switch to ON. 2) Measure the voltage between ECM and chassis ground on faulty cylinders. ***Connector & terminal*** ***#1 (B134) No. 10 (+) — Chassis ground (–):*** ***#2 (B134) No. 11 (+) — Chassis ground (–):*** ***#3 (B134) No. 12 (+) — Chassis ground (–):*** ***#4 (B134) No. 13 (+) — Chassis ground (–):***	Is the voltage 10 V or more?	Go to step **14**.	Go to step **10**.
10	**CHECK HARNESS BETWEEN ECM AND FUEL INJECTOR CONNECTOR.** 1) Turn the ignition switch to OFF. 2) Disconnect the connector from fuel injector on faulty cylinders. 3) Measure the resistance between fuel injector connector and engine ground on faulty cylinders. ***Connector & terminal*** ***#1 (E5) No. 1 — Engine ground:*** ***#2 (E16) No. 1 — Engine ground:*** ***#3 (E6) No. 1 — Engine ground:*** ***#4 (E17) No. 1 — Engine ground:***	Is the resistance 1 MΩ or more?	Go to step **11**.	Repair the ground short circuit of harness between ECM and fuel injector connector.
11	**CHECK HARNESS BETWEEN ECM AND FUEL INJECTOR CONNECTOR.** Measure the resistance of harness between ECM and fuel injector on faulty cylinders. ***Connector & terminal*** ***#1 (B134) No. 10 — (E5) No. 1:*** ***#2 (B134) No. 11 — (E16) No. 1:*** ***#3 (B134) No. 12 — (E6) No. 1:*** ***#4 (B134) No. 13 — (E17) No. 1:***	Is the resistance less than 1 Ω?	Go to step **12**.	Repair the harness and connector. NOTE: In this case, repair the following item: • Open circuit in harness between ECM and fuel injector connector • Poor contact of coupling connector

	Step	Check	Yes	No
12	**CHECK FUEL INJECTOR.** Measure the resistance between fuel injector terminals on faulty cylinder. ***Terminals*** ***No. 1 — No. 2:***	Is the resistance 5 — 20 Ω?	Go to step **13**.	Replace the faulty fuel injector. <Ref. to FU(H4SO)-32, Fuel Injector.>
13	**CHECK POWER SUPPLY LINE.** 1) Turn the ignition switch to ON. 2) Measure the voltage between fuel injector and engine ground on faulty cylinders. ***Connector & terminal*** ***#1 (E5) No. 2 (+) — Engine ground (–):*** ***#2 (E16) No. 2 (+) — Engine ground (–):*** ***#3 (E6) No. 2 (+) — Engine ground (–):*** ***#4 (E17) No. 2 (+) — Engine ground (–):***	Is the voltage 10 V or more?	Repair the poor contact of all connectors in fuel injector circuit.	Repair the harness and connector. NOTE: In this case, repair the following item: • Open circuit in harness between the main relay connector and fuel injector connector on faulty cylinders • Poor contact of coupling connector • Poor contact of main relay connector
14	**CHECK HARNESS BETWEEN ECM AND FUEL INJECTOR CONNECTOR.** 1) Turn the ignition switch to OFF. 2) Disconnect the connector from fuel injector on faulty cylinders. 3) Turn the ignition switch to ON. 4) Measure the voltage between ECM and chassis ground on faulty cylinders. ***Connector & terminal*** ***#1 (B134) No. 10 (+) — Chassis ground (–):*** ***#2 (B134) No. 11 (+) — Chassis ground (–):*** ***#3 (B134) No. 12 (+) — Chassis ground (–):*** ***#4 (B134) No. 13 (+) — Chassis ground (–):***	Is the voltage 10 V or more?	Repair the short circuit to power in the harness between the ECM and fuel injector.	Go to step **15**.
15	**CHECK FUEL INJECTOR.** 1) Turn the ignition switch to OFF. 2) Measure the resistance between fuel injector terminals on faulty cylinder. ***Terminals*** ***No. 1 — No. 2:***	Is the resistance less than 1 Ω?	Replace the faulty fuel injector. <Ref. to FU(H4SO)-32, Fuel Injector.>	Go to step **16**.
16	**CHECK INSTALLATION CONDITION OF CAMSHAFT POSITION SENSOR/CRANKSHAFT POSITION SENSOR.**	Is the camshaft position sensor or crankshaft position sensor loosely installed?	Tighten the camshaft position sensor or crankshaft position sensor. <Ref. to FU(H4SO)-24, Camshaft Position Sensor.> <Ref. to FU(H4SO)-22, Crankshaft Position Sensor.>	Go to step **17**.
17	**CHECK CRANK SPROCKET.** Remove the timing belt cover. <Ref. to ME(H4SO)-46, REMOVAL, Timing Belt Cover.>	Is the crank sprocket rusted or does it have broken teeth?	Replace the crank sprocket. <Ref. to ME(H4SO)-53, Crank Sprocket.>	Go to step **18**.

Step		Check	Yes	No
18	**CHECK INSTALLATION CONDITION OF TIMING BELT.** Turn the crankshaft using ST, and align the alignment mark on crank sprocket with alignment mark on cylinder block. ST 499987500 CRANKSHAFT SOCKET	Is the timing belt dislocated from its proper position?	Repair the installation condition of timing belt. <Ref. to ME(H4SO)-47, Timing Belt.>	Go to step **19**.
19	**CHECK ELECTRONIC THROTTLE CONTROL RELAY.** 1) Turn the ignition switch to OFF. 2) Remove the electronic throttle control relay. 3) Connect the battery to terminals No. 13 and No. 14 of electronic throttle control relay. 4) Measure the resistance between electronic throttle control relay terminals. ***Terminals*** ***No. 15 — No. 16:***	Is the resistance less than 1 Ω?	Go to step **20**.	Replace the electronic throttle control relay. <Ref. to FU(H4SO)-44, Electronic Throttle Control Relay.>
20	**CHECK POWER SUPPLY OF ELECTRONIC THROTTLE CONTROL RELAY.** Measure the voltage between electronic throttle control relay connector and chassis ground. ***Connector & terminal*** ***(B220) No. 16 (+) — Chassis ground (–):***	Is the voltage 10 V or more?	Go to step **21**.	Repair the open or ground short circuit of power supply circuit.
21	**CHECK HARNESS BETWEEN ECM AND ELECTRONIC THROTTLE CONTROL RELAY CONNECTOR.** 1) Disconnect the connector from ECM. 2) Turn the ignition switch to ON. 3) Measure the voltage between electronic throttle control relay connector and chassis ground. ***Connector & terminal*** ***(B220) No. 14 (+) — Chassis ground (–):***	Is the voltage 10 V or more?	Repair the short circuit to power in the harness between ECM and electronic throttle control relay connector.	Go to step **22**.
22	**CHECK HARNESS BETWEEN ECM AND ELECTRONIC THROTTLE CONTROL RELAY CONNECTOR.** 1) Turn the ignition switch to OFF. 2) Measure the resistance between electronic throttle control relay connector and chassis ground. ***Connector & terminal*** ***(B220) No. 14 — Chassis ground:*** ***(B220) No. 15 — Chassis ground:***	Is the resistance 1 MΩ or more?	Go to step **23**.	Repair the short circuit in harness to ground between ECM and electronic throttle control relay connector.
23	**CHECK HARNESS BETWEEN ECM AND ELECTRONIC THROTTLE CONTROL RELAY CONNECTOR.** Measure the resistance between ECM and electronic throttle control relay connector. ***Connector & terminal*** ***(B135) No. 17 — (B220) No. 14:*** ***(B135) No. 7 — (B220) No. 15:***	Is the resistance less than 1 Ω?	Go to step **24**.	Repair the open circuit in harness between ECM and electronic throttle control relay connector.

	Step	Check	Yes	No
24	**CHECK HARNESS BETWEEN ECM AND ELECTRONIC THROTTLE CONTROL CONNECTOR.** 1) Turn the ignition switch to OFF. 2) Disconnect the connectors from the ECM and electronic throttle control. 3) Measure the resistance between ECM and chassis ground. ***Connector & terminal*** ***(B134) No. 19 — Chassis ground:*** ***(B134) No. 18 — Chassis ground:*** ***(B134) No. 18 — (B136) No. 4:*** ***(B134) No. 28 — Chassis ground:***	Is the resistance 1 MΩ or more?	Go to step **25**.	Repair the ground short circuit of harness between ECM and electronic throttle control connector.
25	**CHECK SHORT CIRCUIT INSIDE THE ECM.** 1) Connect the connector to ECM. 2) Measure the resistance between electronic throttle control connector and engine ground. ***Connector & terminal*** ***(E57) No. 6 — Engine ground:*** ***(E57) No. 4 — Engine ground:***	Is the resistance 1 MΩ or more?	Go to step **26**.	Repair the ground short circuit of harness between ECM and electronic throttle control connector. Replace the ECM if defective. <Ref. to FU(H4SO)-39, Engine Control Module (ECM).>
26	**CHECK HARNESS BETWEEN ECM AND ELECTRONIC THROTTLE CONTROL CONNECTOR.** 1) Disconnect the connector from ECM. 2) Measure the resistance of harness between ECM and electronic throttle control connector. ***Connector & terminal*** ***(B134) No. 18 — (E57) No. 6:*** ***(B134) No. 28 — (E57) No. 4:*** ***(B134) No. 29 — (E57) No. 3:***	Is the resistance less than 1 Ω?	Go to step **27**.	Repair the harness and connector. NOTE: In this case, repair the following item: • Open circuit in harness between ECM and electronic throttle control connector • Poor contact of coupling connector
27	**CHECK HARNESS BETWEEN ECM AND ELECTRONIC THROTTLE CONTROL CONNECTOR.** 1) Connect the connector to ECM. 2) Measure the resistance between electronic throttle control connector and engine ground. ***Connector & terminal*** ***(E57) No. 3 — Engine ground:***	Is the resistance less than 5 Ω?	Go to step **28**.	Repair the harness and connector. NOTE: In this case, repair the following item: • Open circuit of harness between ECM and engine ground • Poor contact of ECM connector • Poor contact of coupling connector
28	**CHECK HARNESS BETWEEN ECM AND ELECTRONIC THROTTLE CONTROL CONNECTOR.** 1) Turn the ignition switch to ON. 2) Measure the voltage between electronic throttle control connector and engine ground. ***Connector & terminal*** ***(E57) No. 6 (+) — Engine ground (–):*** ***(E57) No. 4 (+) — Engine ground (–):***	Is the voltage 5 V or more?	Repair the short circuit of harness to power supply between ECM and electronic throttle control connector.	Go to step **29**.

	Step	Check	Yes	No
29	**CHECK HARNESS BETWEEN ECM AND ELECTRONIC THROTTLE CONTROL CONNECTOR.** 1) Turn the ignition switch to OFF. 2) Disconnect the connector from ECM. 3) Measure the resistance between ECM connectors. ***Connector & terminal*** ***(B134) No. 19 — (B134) No. 18:*** ***(B134) No. 19 — (B134) No. 28:***	Is the resistance 1 MΩ or more?	Go to step **30**.	Repair the short circuit of harness to power supply between ECM and electronic throttle control connector.
30	**CHECK SENSOR OUTPUT.** 1) Connect all connectors. 2) Turn the ignition switch to ON. 3) Read the data of main throttle sensor signal using Subaru Select Monitor. NOTE: For detailed operation procedures, refer to "READ CURRENT DATA FOR ENGINE". <Ref. to EN(H4SO)(diag)-34, Subaru Select Monitor.>	Is the voltage 0.81 — 0.87 V?	Go to step **31**.	Repair the poor contact of electronic throttle control connector. Replace the electronic throttle control if defective. <Ref. to FU(H4SO)-14, Throttle Body.>
31	**CHECK SENSOR OUTPUT.** Read the data of sub throttle sensor signal using Subaru Select Monitor. NOTE: Subaru Select Monitor For detailed operation procedures, refer to "READ CURRENT DATA FOR ENGINE". <Ref. to EN(H4SO)(diag)-34, Subaru Select Monitor.>	Is the voltage 1.64 — 1.70 V?	Go to step **32**.	Repair the poor contact of electronic throttle control connector. Replace the electronic throttle control if defective. <Ref. to FU(H4SO)-14, Throttle Body.>
32	**CHECK HARNESS BETWEEN ECM AND ELECTRONIC THROTTLE CONTROL CONNECTOR.** 1) Turn the ignition switch to OFF. 2) Disconnect the connectors from the ECM and electronic throttle control. 3) Measure the resistance between ECM and electronic throttle control connector. ***Connector & terminal*** ***(B134) No. 2 — (E57) No. 2:*** ***(B134) No. 1 — (E57) No. 1:***	Is the resistance less than 1 Ω?	Go to step **33**.	Repair the harness and connector. NOTE: In this case, repair the following item: • Open circuit in harness between ECM and electronic throttle control connector • Poor contact of coupling connector
33	**CHECK HARNESS BETWEEN ECM AND ELECTRONIC THROTTLE CONTROL CONNECTOR.** 1) Connect the connector to ECM. 2) Turn the ignition switch to ON. 3) Measure the voltage between electronic throttle control connector and engine ground. ***Connector & terminal*** ***(E57) No. 2 (+) — Engine ground (–):*** ***(E57) No. 1 (+) — Engine ground (–):***	Is the voltage 5 V or more?	Repair the short circuit to power in the harness between ECM and electronic throttle control.	Go to step **34**.

	Step	Check	Yes	No
34	**CHECK HARNESS BETWEEN ECM AND ELECTRONIC THROTTLE CONTROL CONNECTOR.** 1) Turn the ignition switch to OFF. 2) Disconnect the connector from ECM. 3) Measure the resistance between electronic throttle control connector and engine ground. ***Connector & terminal*** ***(E57) No. 2 — Engine ground:*** ***(E57) No. 1 — Engine ground:***	Is the resistance 1 MΩ or more?	Go to step **35**.	Repair the ground short circuit of harness between ECM and electronic throttle control connector.
35	**CHECK HARNESS BETWEEN ELECTRONIC THROTTLE CONTROL CONNECTOR.** Measure the resistance between electronic throttle control connectors. ***Connector & terminal*** ***(E57) No. 2 — (E57) No. 1:***	Is the resistance 1 MΩ or more?	Go to step **36**.	Repair the short circuit of harness between ECM and electronic throttle control connector.
36	**CHECK ELECTRONIC THROTTLE CONTROL GROUND CIRCUIT.** Measure the resistance between ECM and chassis ground. ***Connector & terminal*** ***(B134) No. 3 — Chassis ground:*** ***(B134) No. 4 — Chassis ground:*** ***(B134) No. 6 — Chassis ground:*** ***(B137) No. 1 — Chassis ground:*** ***(B137) No. 3 — Chassis ground:***	Is the resistance less than 5 Ω?	Go to step **37**.	Repair the harness and connector. NOTE: In this case, repair the following item: • Open circuit of harness between ECM and engine ground • Poor contact of coupling connector
37	**CHECK ELECTRONIC THROTTLE CONTROL.** Measure the resistance between electronic throttle control terminals. ***Terminals*** ***No. 2 — No. 1:***	Is the resistance 50 Ω or less?	Go to step **38**.	Replace the electronic throttle control. <Ref. to FU(H4SO)-14, Throttle Body.>
38	**CHECK ELECTRONIC THROTTLE CONTROL.** Move the throttle valve to the fully open and fully closed positions with fingers. Check that the valve returns to the specified position when releasing fingers.	Does the valve return to the specified position? Standard value: 3 mm (0.12 in) from fully closed position	Repair the poor contact of ECM connector.	Replace the electronic throttle control. <Ref. to FU(H4SO)-14, Throttle Body.>

CW:DTC P2096 POST CATALYST FUEL TRIM SYSTEM TOO LEAN (BANK 1)

DTC DETECTING CONDITION:

- Detected when two consecutive driving cycles with fault occur.
- GENERAL DESCRIPTION <Ref. to GD(H4SO)-175, DTC P2096 POST CATALYST FUEL TRIM SYSTEM TOO LEAN (BANK 1), Diagnostic Trouble Code (DTC) Detecting Criteria.>

CAUTION:

After servicing or replacing faulty parts, perform Clear Memory Mode <Ref. to EN(H4SO)(diag)-54, OPERATION, Clear Memory Mode.>, and Inspection Mode <Ref. to EN(H4SO)(diag)-42, PROCEDURE, Inspection Mode.>.

WIRING DIAGRAM:

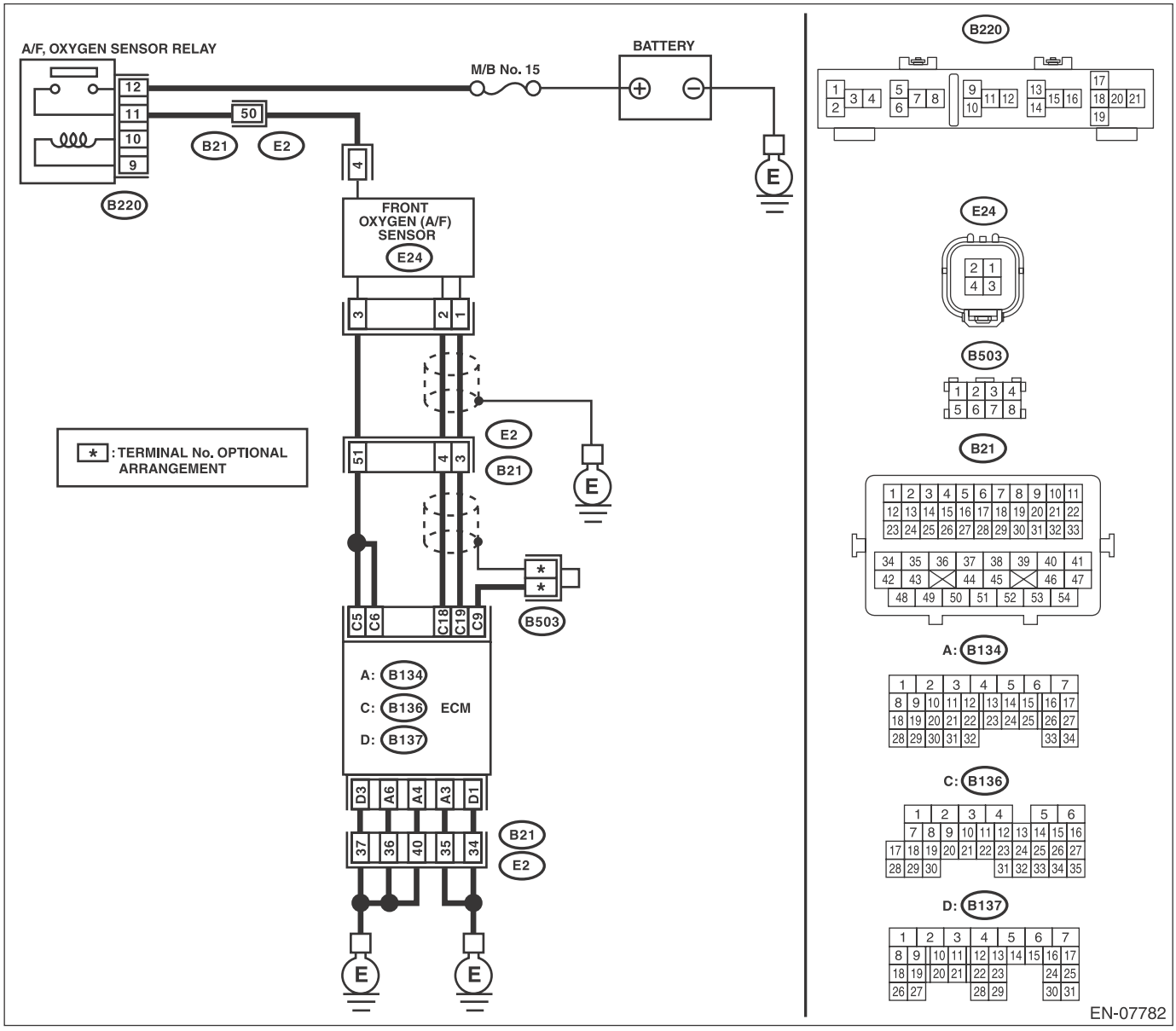

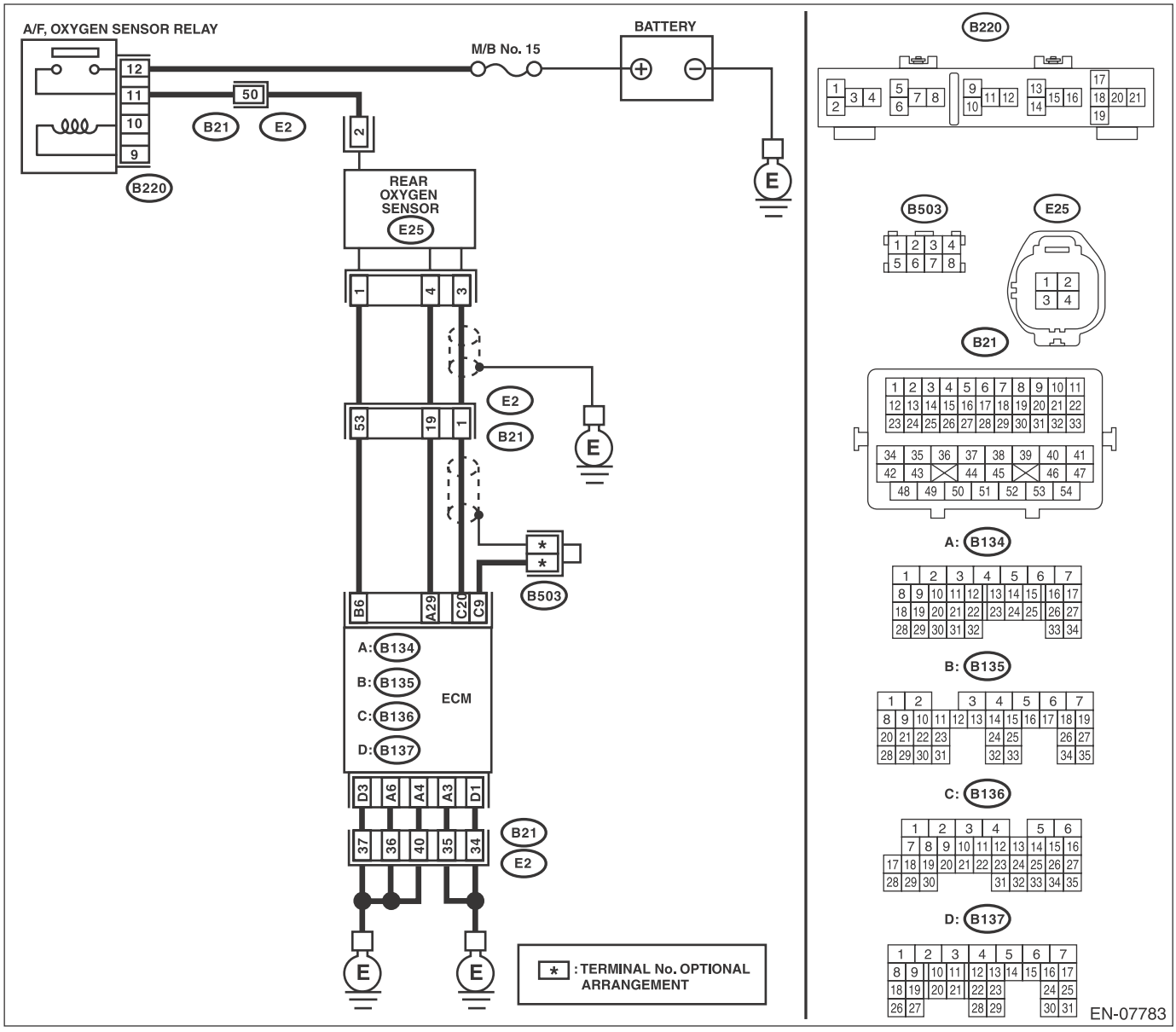

Step		Check	Yes	No
1	**CHECK FOR ANY OTHER DTC ON DISPLAY.**	Is any other DTC displayed?	Check DTC using "List of Diagnostic Trouble Code (DTC)". <Ref. to EN(H4SO)(diag)-79, List of Diagnostic Trouble Code (DTC).>	Go to step **2**.
2	**CHECK FRONT OXYGEN (A/F) SENSOR CONNECTOR AND COUPLING CONNECTOR.**	Has water entered the connector?	Completely remove any water inside.	Go to step **3**.

Step		Check	Yes	No
3	**CHECK HARNESS BETWEEN ECM AND FRONT OXYGEN (A/F) SENSOR CONNECTOR.** 1) Turn the ignition switch to OFF. 2) Disconnect the connectors from ECM and front oxygen (A/F) sensor. 3) Measure the resistance of harness between ECM and front oxygen (A/F) sensor connector. ***Connector & terminal*** ***(B136) No. 19 — (E24) No. 1:*** ***(B136) No. 18 — (E24) No. 2:***	Is the resistance less than 1 Ω?	Go to step **4**.	Repair the harness and connector. NOTE: In this case, repair the following item: • Open circuit in harness between ECM and front oxygen (A/F) sensor connector • Poor contact of coupling connector
4	**CHECK HARNESS BETWEEN ECM AND FRONT OXYGEN (A/F) SENSOR CONNECTOR.** Measure the resistance between ECM and chassis ground. ***Connector & terminal*** ***(B136) No. 19 — Chassis ground:*** ***(B136) No. 18 — Chassis ground:***	Is the resistance 1 MΩ or more?	Go to step **5**.	Repair the ground short circuit of harness between ECM and front oxygen (A/F) sensor connector.
5	**CHECK OUTPUT SIGNAL FOR ECM.** 1) Connect the connector to ECM. 2) Turn the ignition switch to ON. 3) Measure the voltage between front oxygen (A/F) sensor connector and chassis ground. ***Connector & terminal*** ***(E24) No. 1 (+) — Chassis ground (–):***	Is the voltage 4.5 V or more?	Go to step **7**.	Go to step **6**.
6	**CHECK OUTPUT SIGNAL FOR ECM.** Measure the voltage between front oxygen (A/F) sensor connector and chassis ground. ***Connector & terminal*** ***(E24) No. 2 (+) — Chassis ground (–):***	Is the voltage 4.95 V or more?	Go to step **7**.	Go to step **8**.
7	**CHECK OUTPUT SIGNAL FOR ECM.** Measure the voltage between front oxygen (A/F) sensor connector and chassis ground. ***Connector & terminal*** ***(E24) No. 1 (+) — Chassis ground (–):*** ***(E24) No. 2 (+) — Chassis ground (–):***	Is the voltage 8 V or more?	Repair the short circuit of harness to power supply between ECM and front oxygen (A/F) sensor connector. After repair, replace the ECM. <Ref. to FU(H4SO)-39, Engine Control Module (ECM).>	Repair the poor contact of ECM connector.
8	**CHECK EXHAUST SYSTEM.**	Are there holes or loose bolts on exhaust system?	Repair the exhaust system.	Go to step **9**.
9	**CHECK AIR INTAKE SYSTEM.**	Are there holes, loose bolts or disconnection of hose on air intake system?	Repair the air intake system.	Go to step **10**.

	Step	Check	Yes	No
10	**CHECK FUEL PRESSURE.** **WARNING:** **Place "NO OPEN FLAMES" signs near the working area.** **CAUTION:** **Be careful not to spill fuel.** 1) Connect the front oxygen (A/F) sensor connector. 2) Measure the fuel pressure. <Ref. to ME(H4SO)-28, INSPECTION, Fuel Pressure.> **CAUTION:** **Release fuel pressure before removing the fuel pressure gauge.**	Is the measured value 339.5 — 360.5 kPa (3.5 — 3.7 kg/cm^2, 49 — 52 psi)?	Go to step **11**.	Repair the following item. Fuel pressure is too high: • Clogged fuel line or bent hose Fuel pressure is too low: • Improper fuel pump discharge • Clogged fuel line
11	**CHECK ENGINE COOLANT TEMPERATURE SENSOR.** 1) Start the engine and warm up completely. 2) Read the data of engine coolant temperature sensor signal using Subaru Select Monitor or general scan tool. NOTE: • Subaru Select Monitor For detailed operation procedures, refer to "READ CURRENT DATA FOR ENGINE". <Ref. to EN(H4SO)(diag)-34, Subaru Select Monitor.> • General scan tool For detailed operation procedures, refer to the general scan tool operation manual.	Is the temperature 75°C (167°F) or more?	Go to step **12**.	Replace the engine coolant temperature sensor. <Ref. to FU(H4SO)-21, Engine Coolant Temperature Sensor.>
12	**CHECK MASS AIR FLOW AND INTAKE AIR TEMPERATURE SENSOR.** 1) Start the engine and warm up engine until coolant temperature is higher than 75°C (167°F). 2) For CVT models, set the select lever to "P" range or "N" range, and for MT models, place the shift lever in the neutral position. 3) Turn the A/C switch to OFF. 4) Turn all the accessory switches to OFF. 5) Read the data of mass air flow and intake air temperature sensor signal using Subaru Select Monitor or general scan tool. NOTE: • Subaru Select Monitor For detailed operation procedures, refer to "READ CURRENT DATA FOR ENGINE". <Ref. to EN(H4SO)(diag)-34, Subaru Select Monitor.> • General scan tool For detailed operation procedures, refer to the general scan tool operation manual.	Is the measured value 2.0 — 5.0 g/s (0.26 — 0.66 lb/m)?	Go to step **13**.	Replace the mass air flow and intake air temperature sensor. <Ref. to FU(H4SO)-29, Mass Air Flow and Intake Air Temperature Sensor.>

	Step	Check	Yes	No
13	**CHECK MASS AIR FLOW AND INTAKE AIR TEMPERATURE SENSOR.** 1) Start the engine and warm up engine until coolant temperature is higher than 75°C (167°F). 2) For CVT models, set the select lever to "P" range or "N" range, and for MT models, place the shift lever in the neutral position. 3) Turn the A/C switch to OFF. 4) Turn all the accessory switches to OFF. 5) Open the front hood. 6) Measure the ambient temperature. 7) Read the data of mass air flow and intake air temperature sensor signal using Subaru Select Monitor or general scan tool. NOTE: • Subaru Select Monitor For detailed operation procedures, refer to "READ CURRENT DATA FOR ENGINE". <Ref. to EN(H4SO)(diag)-34, Subaru Select Monitor.> • General scan tool For detailed operation procedures, refer to the general scan tool operation manual.	Subtract ambient temperature from intake air temperature. Is the obtained value –10 — 50°C (–18 — 90°F)?	Go to step **14**.	Check the mass air flow and intake air temperature sensor. <Ref. to FU(H4SO)-29, Mass Air Flow and Intake Air Temperature Sensor.>
14	**CHECK REAR OXYGEN SENSOR DATA.** 1) Warm up the engine until engine coolant temperature is above 75°C (167°F), and keep the engine speed at 3,000 rpm. (2 minutes maximum) 2) Read the data of rear oxygen sensor signal using Subaru Select Monitor or general scan tool. NOTE: • Depress the clutch pedal. (MT model) • Subaru Select Monitor For detailed operation procedures, refer to "READ CURRENT DATA FOR ENGINE". <Ref. to EN(H4SO)(diag)-34, Subaru Select Monitor.> • General scan tool For detailed operation procedures, refer to the general scan tool operation manual.	Is the voltage 490 mV or more?	Go to step **15**.	Go to step **16**.
15	**CHECK REAR OXYGEN SENSOR DATA.** 1) Warm up the engine until engine coolant temperature is above 75°C (167°F), and rapidly reduce the engine speed from 3,000 rpm. 2) Read the data of rear oxygen sensor signal using Subaru Select Monitor or general scan tool. NOTE: • Depress the clutch pedal. (MT model) • Subaru Select Monitor For detailed operation procedures, refer to "READ CURRENT DATA FOR ENGINE". <Ref. to EN(H4SO)(diag)-34, Subaru Select Monitor.> • General scan tool For detailed operation procedures, refer to the general scan tool operation manual.	Is the voltage 250 mV or less?	Go to step **17**.	Go to step **16**.

	Step	Check	Yes	No
16	**CHECK REAR OXYGEN SENSOR CONNECTOR AND COUPLING CONNECTOR.**	Has water entered the connector?	Completely remove any water inside.	Go to step **18**.
17	**CHECK FRONT OXYGEN (A/F) SENSOR USING REAR OXYGEN SENSOR SIGNAL.** 1) Warm up the engine until engine coolant temperature is higher than 75°C (167°F), then keep the engine idling for 5 minutes or more. 2) Read the data of rear oxygen sensor signal using Subaru Select Monitor or general scan tool. NOTE: • Subaru Select Monitor For detailed operation procedures, refer to "READ CURRENT DATA FOR ENGINE". <Ref. to EN(H4SO)(diag)-34, Subaru Select Monitor.> • General scan tool For detailed operation procedures, refer to the general scan tool operation manual.	Is a voltage of 250 mV or less maintained for 5 minutes or more?	Replace the front oxygen (A/F) sensor. <Ref. to FU(H4SO)-35, Front Oxygen (A/F) Sensor.>	Go to step **18**.
18	**CHECK HARNESS BETWEEN ECM AND REAR OXYGEN SENSOR CONNECTOR.** 1) Turn the ignition switch to OFF. 2) Disconnect the connector from ECM and rear oxygen sensor. 3) Measure the resistance of harness between ECM and rear oxygen sensor connector. ***Connector & terminal*** ***(B136) No. 20 — (E25) No. 3:*** ***(B134) No. 29 — (E25) No. 4:***	Is the resistance less than 1 Ω?	Go to step **19**.	Repair the harness and connector. NOTE: In this case, repair the following item: • Open circuit in harness between ECM and rear oxygen sensor connector • Poor contact of coupling connector
19	**CHECK HARNESS BETWEEN ECM AND REAR OXYGEN SENSOR CONNECTOR.** 1) Connect the connector to ECM. 2) Turn the ignition switch to ON. 3) Measure the voltage between rear oxygen sensor connector and chassis ground. ***Connector & terminal*** ***(E25) No. 3 (+) — Chassis ground (–):***	Is the voltage 0.2 — 0.5 V?	Replace the rear oxygen sensor. <Ref. to FU(H4SO)-37, Rear Oxygen Sensor.>	Repair the harness and connector. NOTE: In this case, repair the following item: • Open circuit in harness between ECM and rear oxygen sensor connector • Poor contact of ECM connector • Poor contact of coupling connector

CX:DTC P2097 POST CATALYST FUEL TRIM SYSTEM TOO RICH (BANK 1)

DTC DETECTING CONDITION:

- Detected when two consecutive driving cycles with fault occur.
- GENERAL DESCRIPTION <Ref. to GD(H4SO)-177, DTC P2097 POST CATALYST FUEL TRIM SYSTEM TOO RICH (BANK 1), Diagnostic Trouble Code (DTC) Detecting Criteria.>

CAUTION:

After servicing or replacing faulty parts, perform Clear Memory Mode <Ref. to EN(H4SO)(diag)-54, OPERATION, Clear Memory Mode.>, and Inspection Mode <Ref. to EN(H4SO)(diag)-42, PROCEDURE, Inspection Mode.>.

WIRING DIAGRAM:

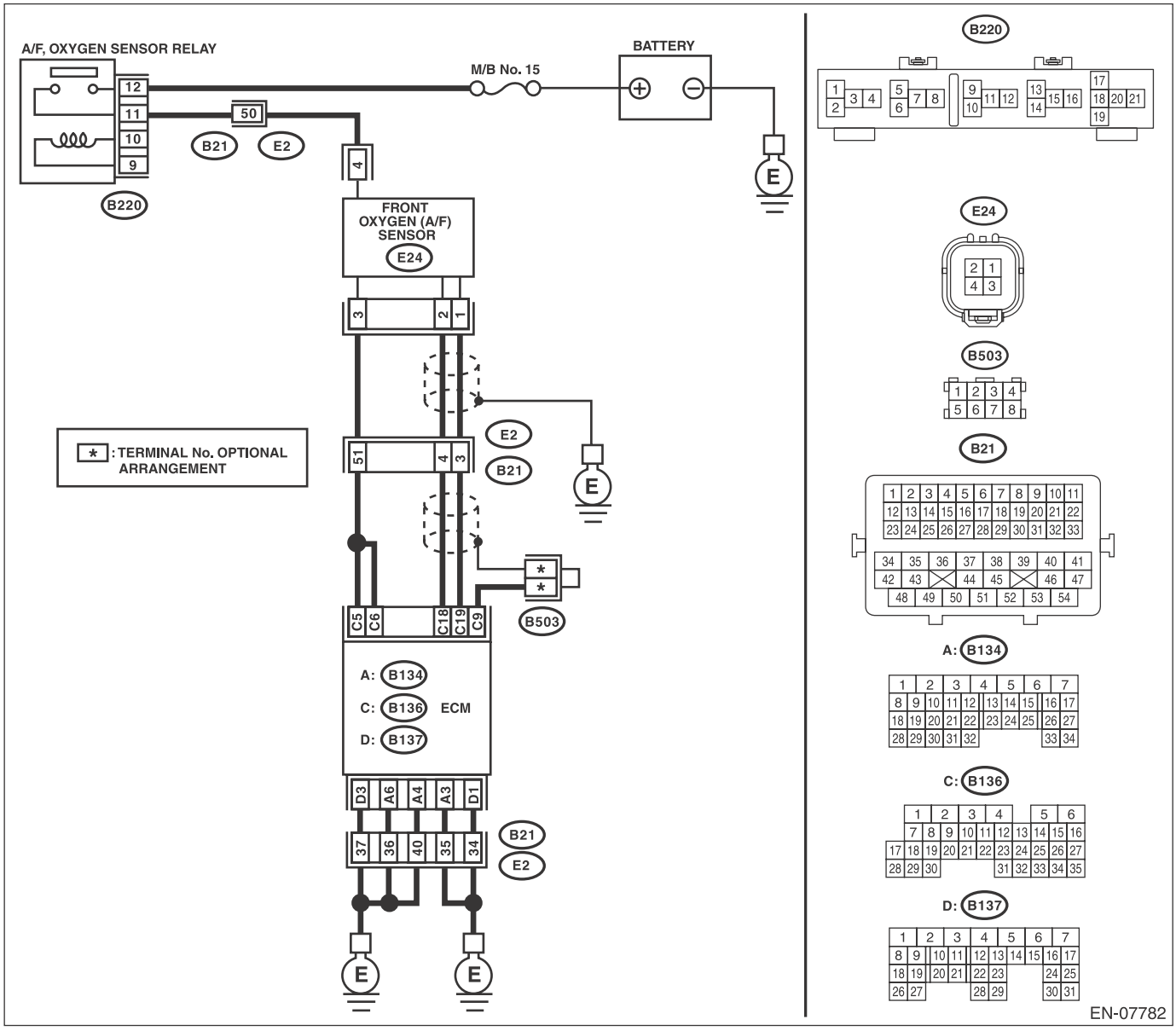

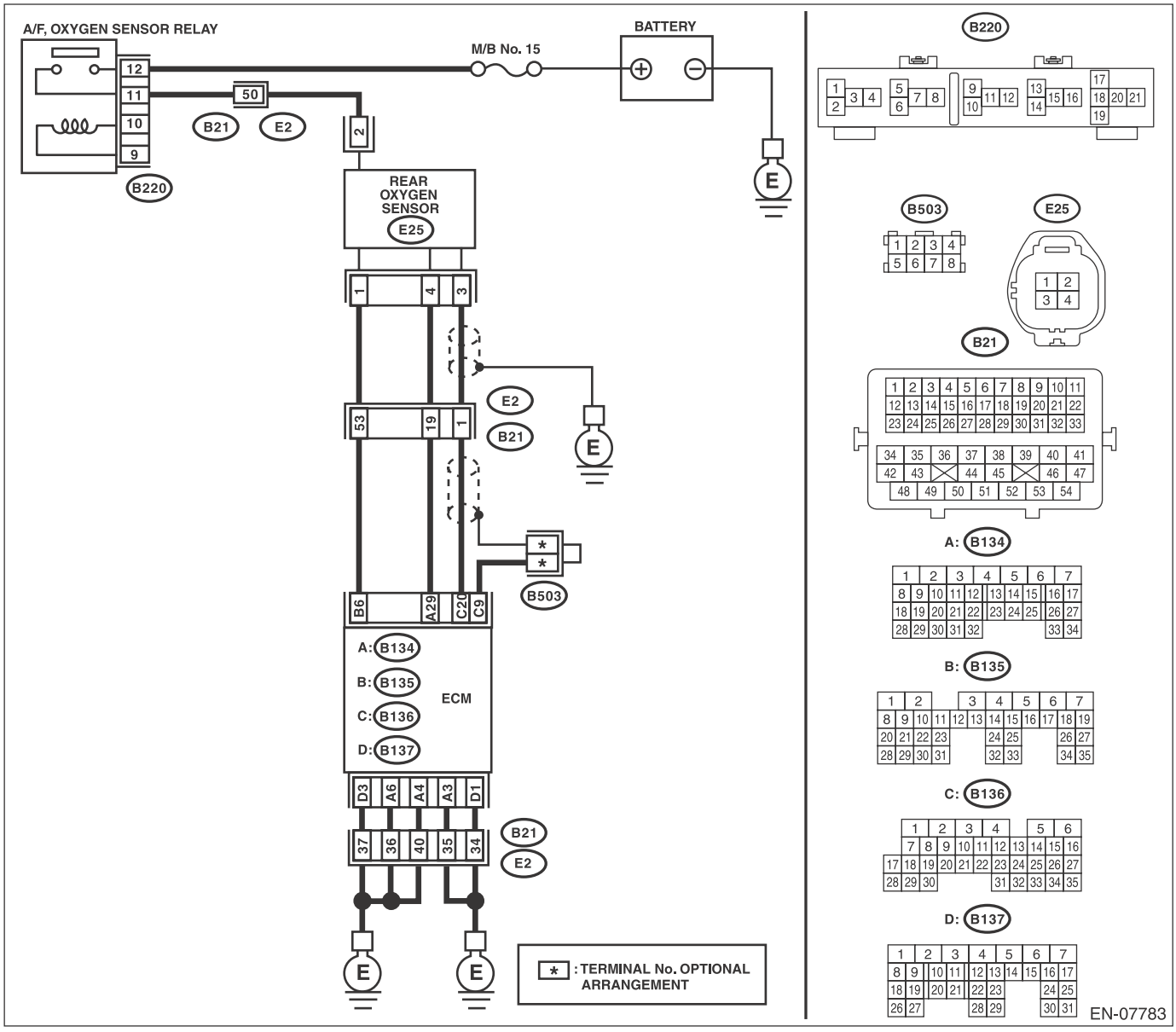

Step		Check	Yes	No
1	**CHECK FOR ANY OTHER DTC ON DISPLAY.**	Is any other DTC displayed?	Check DTC using "List of Diagnostic Trouble Code (DTC)". <Ref. to EN(H4SO)(diag)-79, List of Diagnostic Trouble Code (DTC).>	Go to step **2**.
2	**CHECK FRONT OXYGEN (A/F) SENSOR CONNECTOR AND COUPLING CONNECTOR.**	Has water entered the connector?	Completely remove any water inside.	Go to step **3**.

Step		Check	Yes	No
3	**CHECK HARNESS BETWEEN ECM AND FRONT OXYGEN (A/F) SENSOR CONNECTOR.** 1) Turn the ignition switch to OFF. 2) Disconnect the connectors from ECM and front oxygen (A/F) sensor. 3) Measure the resistance of harness between ECM and front oxygen (A/F) sensor connector. ***Connector & terminal*** ***(B136) No. 19 — (E24) No. 1:*** ***(B136) No. 18 — (E24) No. 2:***	Is the resistance less than 1 Ω?	Go to step **4**.	Repair the harness and connector. NOTE: In this case, repair the following item: • Open circuit in harness between ECM and front oxygen (A/F) sensor connector • Poor contact of coupling connector
4	**CHECK HARNESS BETWEEN ECM AND FRONT OXYGEN (A/F) SENSOR CONNECTOR.** Measure the resistance between ECM and chassis ground. ***Connector & terminal*** ***(B136) No. 19 — Chassis ground:*** ***(B136) No. 18 — Chassis ground:***	Is the resistance 1 MΩ or more?	Go to step **5**.	Repair the ground short circuit of harness between ECM and front oxygen (A/F) sensor connector.
5	**CHECK OUTPUT SIGNAL FOR ECM.** 1) Connect the connector to ECM. 2) Turn the ignition switch to ON. 3) Measure the voltage between front oxygen (A/F) sensor connector and chassis ground. ***Connector & terminal*** ***(E24) No. 1 (+) — Chassis ground (–):***	Is the voltage 4.5 V or more?	Go to step **7**.	Go to step **6**.
6	**CHECK OUTPUT SIGNAL FOR ECM.** Measure the voltage between front oxygen (A/F) sensor connector and chassis ground. ***Connector & terminal*** ***(E24) No. 2 (+) — Chassis ground (–):***	Is the voltage 4.95 V or more?	Go to step **7**.	Go to step **8**.
7	**CHECK OUTPUT SIGNAL FOR ECM.** Measure the voltage between front oxygen (A/F) sensor connector and chassis ground. ***Connector & terminal*** ***(E24) No. 1 (+) — Chassis ground (–):*** ***(E24) No. 2 (+) — Chassis ground (–):***	Is the voltage 8 V or more?	Repair the short circuit of harness to power supply between ECM and front oxygen (A/F) sensor connector. After repair, replace the ECM. <Ref. to FU(H4SO)-39, Engine Control Module (ECM).>	Repair the poor contact of ECM connector.
8	**CHECK EXHAUST SYSTEM.**	Are there holes or loose bolts on exhaust system?	Repair the exhaust system.	Go to step **9**.
9	**CHECK AIR INTAKE SYSTEM.**	Are there holes, loose bolts or disconnection of hose on air intake system?	Repair the air intake system.	Go to step **10**.

	Step	Check	Yes	No
10	**CHECK FUEL PRESSURE.** **WARNING:** **Place "NO OPEN FLAMES" signs near the working area.** **CAUTION:** **Be careful not to spill fuel.** 1) Connect the front oxygen (A/F) sensor connector. 2) Measure the fuel pressure. <Ref. to ME(H4SO)-28, INSPECTION, Fuel Pressure.> **CAUTION:** **Release fuel pressure before removing the fuel pressure gauge.**	Is the measured value 339.5 — 360.5 kPa (3.5 — 3.7 kg/cm^2, 49 — 52 psi)?	Go to step **11**.	Repair the following item. Fuel pressure is too high: • Clogged fuel line or bent hose Fuel pressure is too low: • Improper fuel pump discharge • Clogged fuel line
11	**CHECK ENGINE COOLANT TEMPERATURE SENSOR.** 1) Start the engine and warm up completely. 2) Read the data of engine coolant temperature sensor signal using Subaru Select Monitor or general scan tool. NOTE: • Subaru Select Monitor For detailed operation procedures, refer to "READ CURRENT DATA FOR ENGINE". <Ref. to EN(H4SO)(diag)-34, Subaru Select Monitor.> • General scan tool For detailed operation procedures, refer to the general scan tool operation manual.	Is the temperature 75°C (167°F) or more?	Go to step **12**.	Replace the engine coolant temperature sensor. <Ref. to FU(H4SO)-21, Engine Coolant Temperature Sensor.>
12	**CHECK MASS AIR FLOW AND INTAKE AIR TEMPERATURE SENSOR.** 1) Start the engine and warm up engine until coolant temperature is higher than 75°C (167°F). 2) For CVT models, set the select lever to "P" range or "N" range, and for MT models, place the shift lever in the neutral position. 3) Turn the A/C switch to OFF. 4) Turn all the accessory switches to OFF. 5) Read the data of mass air flow and intake air temperature sensor signal using Subaru Select Monitor or general scan tool. NOTE: • Subaru Select Monitor For detailed operation procedures, refer to "READ CURRENT DATA FOR ENGINE". <Ref. to EN(H4SO)(diag)-34, Subaru Select Monitor.> • General scan tool For detailed operation procedures, refer to the general scan tool operation manual.	Is the measured value 2.0 — 5.0 g/s (0.26 — 0.66 lb/m)?	Go to step **13**.	Replace the mass air flow and intake air temperature sensor. <Ref. to FU(H4SO)-29, Mass Air Flow and Intake Air Temperature Sensor.>

	Step	Check	Yes	No
13	**CHECK MASS AIR FLOW AND INTAKE AIR TEMPERATURE SENSOR.** 1) Start the engine and warm up engine until coolant temperature is higher than 75°C (167°F). 2) For CVT models, set the select lever to "P" range or "N" range, and for MT models, place the shift lever in the neutral position. 3) Turn the A/C switch to OFF. 4) Turn all the accessory switches to OFF. 5) Open the front hood. 6) Measure the ambient temperature. 7) Read the data of mass air flow and intake air temperature sensor signal using Subaru Select Monitor or general scan tool. NOTE: • Subaru Select Monitor For detailed operation procedures, refer to "READ CURRENT DATA FOR ENGINE". <Ref. to EN(H4SO)(diag)-34, Subaru Select Monitor.> • General scan tool For detailed operation procedures, refer to the general scan tool operation manual.	Subtract ambient temperature from intake air temperature. Is the obtained value –10 — 50°C (–18 — 90°F)?	Go to step **14**.	Check the mass air flow and intake air temperature sensor. <Ref. to FU(H4SO)-29, Mass Air Flow and Intake Air Temperature Sensor.>
14	**CHECK REAR OXYGEN SENSOR DATA.** 1) Warm up the engine until engine coolant temperature is above 75°C (167°F), and keep the engine speed at 3,000 rpm. (2 minutes maximum) 2) Read the data of rear oxygen sensor signal using Subaru Select Monitor or general scan tool. NOTE: • Depress the clutch pedal. (MT model) • Subaru Select Monitor For detailed operation procedures, refer to "READ CURRENT DATA FOR ENGINE". <Ref. to EN(H4SO)(diag)-34, Subaru Select Monitor.> • General scan tool For detailed operation procedures, refer to the general scan tool operation manual.	Is the voltage 490 mV or more?	Go to step **15**.	Go to step **16**.
15	**CHECK REAR OXYGEN SENSOR DATA.** 1) Warm up the engine until engine coolant temperature is above 75°C (167°F), and rapidly reduce the engine speed from 3,000 rpm. 2) Read the data of rear oxygen sensor signal using Subaru Select Monitor or general scan tool. NOTE: • Depress the clutch pedal. (MT model) • Subaru Select Monitor For detailed operation procedures, refer to "READ CURRENT DATA FOR ENGINE". <Ref. to EN(H4SO)(diag)-34, Subaru Select Monitor.> • General scan tool For detailed operation procedures, refer to the general scan tool operation manual.	Is the voltage 250 mV or less?	Go to step **17**.	Go to step **16**.

	Step	Check	Yes	No
16	**CHECK REAR OXYGEN SENSOR CONNECTOR AND COUPLING CONNECTOR.**	Has water entered the connector?	Completely remove any water inside.	Go to step **18**.
17	**CHECK FRONT OXYGEN (A/F) SENSOR USING REAR OXYGEN SENSOR SIGNAL.** 1) Warm up the engine until engine coolant temperature is higher than 75°C (167°F), then keep the engine idling for 5 minutes or more. 2) Read the data of rear oxygen sensor signal using Subaru Select Monitor or general scan tool. NOTE: • Subaru Select Monitor For detailed operation procedures, refer to "READ CURRENT DATA FOR ENGINE". <Ref. to EN(H4SO)(diag)-34, Subaru Select Monitor.> • General scan tool For detailed operation procedures, refer to the general scan tool operation manual.	Is a voltage of 0.8 V or more maintained for 5 minutes or more?	Replace the front oxygen (A/F) sensor. <Ref. to FU(H4SO)-35, Front Oxygen (A/F) Sensor.>	Go to step **18**.
18	**CHECK HARNESS BETWEEN ECM AND REAR OXYGEN SENSOR CONNECTOR.** 1) Turn the ignition switch to OFF. 2) Disconnect the connector from ECM and rear oxygen sensor. 3) Measure the resistance of harness between ECM and rear oxygen sensor connector. ***Connector & terminal*** ***(B136) No. 20 — (E25) No. 3:*** ***(B134) No. 29 — (E25) No. 4:***	Is the resistance less than 1 Ω?	Go to step **19**.	Repair the harness and connector. NOTE: In this case, repair the following item: • Open circuit in harness between ECM and rear oxygen sensor connector • Poor contact of coupling connector
19	**CHECK HARNESS BETWEEN ECM AND REAR OXYGEN SENSOR CONNECTOR.** 1) Connect the connector to ECM. 2) Turn the ignition switch to ON. 3) Measure the voltage between rear oxygen sensor connector and chassis ground. ***Connector & terminal*** ***(E25) No. 3 (+) — Chassis ground (–):***	Is the voltage 0.2 — 0.5 V?	Replace the rear oxygen sensor. <Ref. to FU(H4SO)-37, Rear Oxygen Sensor.>	Repair the harness and connector. NOTE: In this case, repair the following item: • Open circuit in harness between ECM and rear oxygen sensor connector • Poor contact of ECM connector • Poor contact of coupling connector

CY:DTC P2101 THROTTLE ACTUATOR CONTROL MOTOR CIRCUIT RANGE/ PERFORMANCE

DTC DETECTING CONDITION:

- Immediately at fault recognition
- GENERAL DESCRIPTION <Ref. to GD(H4SO)-179, DTC P2101 THROTTLE ACTUATOR CONTROL MOTOR CIRCUIT RANGE/PERFORMANCE, Diagnostic Trouble Code (DTC) Detecting Criteria.>

TROUBLE SYMPTOM:

- Improper idling
- Poor driving performance
- Engine stalls.

CAUTION:

After servicing or replacing faulty parts, perform Clear Memory Mode <Ref. to EN(H4SO)(diag)-54, OPERATION, Clear Memory Mode.>, and Inspection Mode <Ref. to EN(H4SO)(diag)-42, PROCEDURE, Inspection Mode.>.

WIRING DIAGRAM:

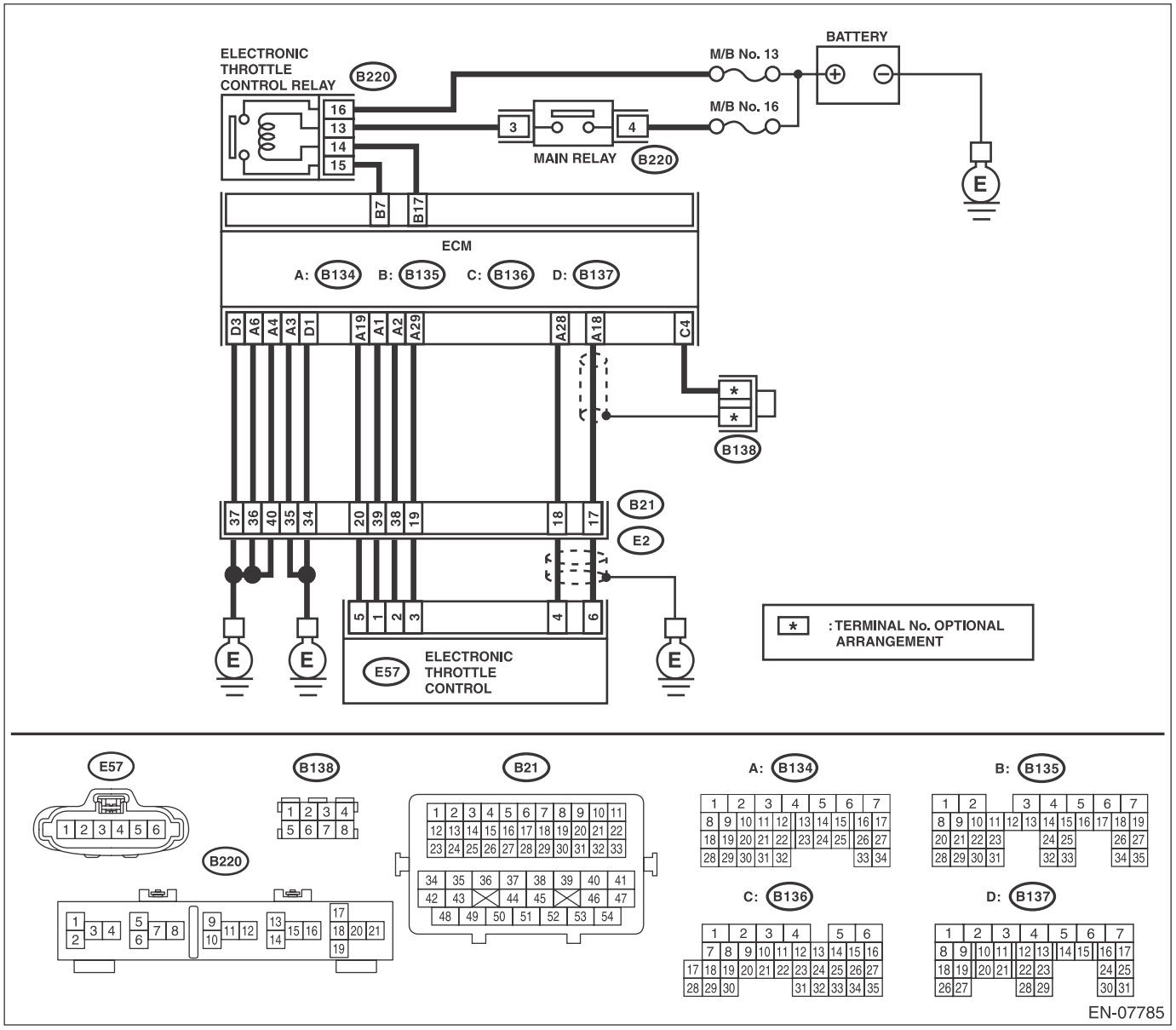

	Step	Check	Yes	No
1	**CHECK ELECTRONIC THROTTLE CONTROL RELAY.** 1) Turn the ignition switch to OFF. 2) Remove the electronic throttle control relay. 3) Connect the battery to terminals No. 13 and No. 14 of electronic throttle control relay. 4) Measure the resistance between electronic throttle control relay terminals. ***Terminals*** ***No. 15 — No. 16:***	Is the resistance less than 1 Ω?	Go to step **2**.	Replace the electronic throttle control relay. <Ref. to FU(H4SO)-44, Electronic Throttle Control Relay.>
2	**CHECK POWER SUPPLY OF ELECTRONIC THROTTLE CONTROL RELAY.** Measure the voltage between electronic throttle control relay connector and chassis ground. ***Connector & terminal*** ***(B220) No. 16 (+) — Chassis ground (–):***	Is the voltage 10 V or more?	Go to step **3**.	Repair the open or ground short circuit of power supply circuit.
3	**CHECK HARNESS BETWEEN ECM AND ELECTRONIC THROTTLE CONTROL RELAY CONNECTOR.** 1) Disconnect the connector from ECM. 2) Turn the ignition switch to ON. 3) Measure the voltage between electronic throttle control relay connector and chassis ground. ***Connector & terminal*** ***(B220) No. 14 (+) — Chassis ground (–):***	Is the voltage 10 V or more?	Repair the short circuit to power in the harness between ECM and electronic throttle control relay connector.	Go to step **4**.
4	**CHECK HARNESS BETWEEN ECM AND ELECTRONIC THROTTLE CONTROL RELAY CONNECTOR.** 1) Turn the ignition switch to OFF. 2) Measure the resistance between electronic throttle control relay connector and chassis ground. ***Connector & terminal*** ***(B220) No. 14 — Chassis ground:*** ***(B220) No. 15 — Chassis ground:***	Is the resistance 1 MΩ or more?	Go to step **5**.	Repair the short circuit in harness to ground between ECM and electronic throttle control relay connector.
5	**CHECK HARNESS BETWEEN ECM AND ELECTRONIC THROTTLE CONTROL RELAY CONNECTOR.** Measure the resistance between ECM and electronic throttle control relay connector. ***Connector & terminal*** ***(B135) No. 17 — (B220) No. 14:*** ***(B135) No. 7 — (B220) No. 15:***	Is the resistance less than 1 Ω?	Go to step **6**.	Repair the open circuit in harness between ECM and electronic throttle control relay connector.
6	**CHECK HARNESS BETWEEN ECM AND ELECTRONIC THROTTLE CONTROL CONNECTOR.** 1) Turn the ignition switch to OFF. 2) Disconnect the connectors from electronic throttle control. 3) Measure the resistance between ECM and chassis ground. ***Connector & terminal*** ***(B134) No. 19 — Chassis ground:*** ***(B134) No. 18 — Chassis ground:*** ***(B134) No. 18 — (B136) No. 4:*** ***(B134) No. 28 — Chassis ground:***	Is the resistance 1 MΩ or more?	Go to step **7**.	Repair the ground short circuit of harness between ECM and electronic throttle control connector.

Step		Check	Yes	No
7	**CHECK SHORT CIRCUIT INSIDE THE ECM.** 1) Connect the connector to ECM. 2) Measure the resistance between electronic throttle control connector and engine ground. ***Connector & terminal*** ***(E57) No. 6 — Engine ground:*** ***(E57) No. 4 — Engine ground:***	Is the resistance 1 MΩ or more?	Go to step **8**.	Repair the ground short circuit of harness between ECM and electronic throttle control connector. Replace the ECM if defective. <Ref. to FU(H4SO)-39, Engine Control Module (ECM).>
8	**CHECK HARNESS BETWEEN ECM AND ELECTRONIC THROTTLE CONTROL CONNECTOR.** 1) Disconnect the connector from ECM. 2) Measure the resistance of harness between ECM and electronic throttle control connector. ***Connector & terminal*** ***(B134) No. 18 — (E57) No. 6:*** ***(B134) No. 28 — (E57) No. 4:*** ***(B134) No. 29 — (E57) No. 3:***	Is the resistance less than 1 Ω?	Go to step **9**.	Repair the harness and connector. NOTE: In this case, repair the following item: • Open circuit in harness between ECM and electronic throttle control connector • Poor contact of coupling connector
9	**CHECK HARNESS BETWEEN ECM AND ELECTRONIC THROTTLE CONTROL CONNECTOR.** 1) Connect the connector to ECM. 2) Measure the resistance between electronic throttle control connector and engine ground. ***Connector & terminal*** ***(E57) No. 3 — Engine ground:***	Is the resistance less than 5 Ω?	Go to step **10**.	Repair the harness and connector. NOTE: In this case, repair the following item: • Open circuit of harness between ECM and engine ground • Poor contact of ECM connector • Poor contact of coupling connector
10	**CHECK HARNESS BETWEEN ECM AND ELECTRONIC THROTTLE CONTROL CONNECTOR.** 1) Turn the ignition switch to ON. 2) Measure the voltage between electronic throttle control connector and engine ground. ***Connector & terminal*** ***(E57) No. 6 (+) — Engine ground (–):*** ***(E57) No. 4 (+) — Engine ground (–):***	Is the voltage 5 V or more?	Repair the short circuit of harness to power supply between ECM and electronic throttle control connector.	Go to step **11**.
11	**CHECK HARNESS BETWEEN ECM AND ELECTRONIC THROTTLE CONTROL CONNECTOR.** 1) Turn the ignition switch to OFF. 2) Disconnect the connector from ECM. 3) Measure the resistance between ECM connectors. ***Connector & terminal*** ***(B134) No. 19 — (B134) No. 18:*** ***(B134) No. 19 — (B134) No. 28:***	Is the resistance 1 MΩ or more?	Go to step **12**.	Repair the short circuit of harness to power supply between ECM and electronic throttle control connector.

	Step	Check	Yes	No
12	**CHECK SENSOR OUTPUT.** 1) Connect all connectors. 2) Turn the ignition switch to ON. 3) Read the data of main throttle sensor signal using Subaru Select Monitor. NOTE: For detailed operation procedures, refer to "READ CURRENT DATA FOR ENGINE". <Ref. to EN(H4SO)(diag)-34, Subaru Select Monitor.>	Is the voltage 0.81 — 0.87 V?	Go to step **13**.	Repair the poor contact of electronic throttle control connector. Replace the electronic throttle control if defective. <Ref. to FU(H4SO)-14, Throttle Body.>
13	**CHECK SENSOR OUTPUT.** Read the data of sub throttle sensor signal using Subaru Select Monitor. NOTE: Subaru Select Monitor For detailed operation procedures, refer to "READ CURRENT DATA FOR ENGINE". <Ref. to EN(H4SO)(diag)-34, Subaru Select Monitor.>	Is the voltage 1.64 — 1.70 V?	Go to step **14**.	Repair the poor contact of electronic throttle control connector. Replace the electronic throttle control if defective. <Ref. to FU(H4SO)-14, Throttle Body.>
14	**CHECK HARNESS BETWEEN ECM AND ELECTRONIC THROTTLE CONTROL CONNECTOR.** 1) Turn the ignition switch to OFF. 2) Disconnect the connectors from the ECM and electronic throttle control. 3) Measure the resistance between ECM and electronic throttle control connector. ***Connector & terminal*** ***(B134) No. 2 — (E57) No. 2:*** ***(B134) No. 1 — (E57) No. 1:***	Is the resistance less than 1 Ω?	Go to step **15**.	Repair the harness and connector. NOTE: In this case, repair the following item: • Open circuit in harness between ECM and electronic throttle control connector • Poor contact of coupling connector
15	**CHECK HARNESS BETWEEN ECM AND ELECTRONIC THROTTLE CONTROL CONNECTOR.** 1) Connect the connector to ECM. 2) Turn the ignition switch to ON. 3) Measure the voltage between electronic throttle control connector and engine ground. ***Connector & terminal*** ***(E57) No. 2 (+) — Engine ground (–):*** ***(E57) No. 1 (+) — Engine ground (–):***	Is the voltage 5 V or more?	Repair the short circuit of harness to power supply between ECM and electronic throttle control connector.	Go to step **16**.
16	**CHECK HARNESS BETWEEN ECM AND ELECTRONIC THROTTLE CONTROL CONNECTOR.** 1) Turn the ignition switch to OFF. 2) Disconnect the connector from ECM. 3) Measure the resistance between electronic throttle control connector and engine ground. ***Connector & terminal*** ***(E57) No. 2 — Engine ground:*** ***(E57) No. 1 — Engine ground:***	Is the resistance 1 MΩ or more?	Go to step **17**.	Repair the ground short circuit of harness between ECM and electronic throttle control connector.
17	**CHECK ELECTRONIC THROTTLE CONTROL CONNECTOR HARNESS.** Measure the resistance between electronic throttle control connectors. ***Connector & terminal*** ***(E57) No. 2 — (E57) No. 1:***	Is the resistance 1 MΩ or more?	Go to step **18**.	Repair the short circuit of harness between ECM and electronic throttle control connector.

	Step	Check	Yes	No
18	**CHECK ELECTRONIC THROTTLE CONTROL GROUND CIRCUIT.** Measure the resistance between ECM and chassis ground. ***Connector & terminal*** ***(B134) No. 3 — Chassis ground:*** ***(B134) No. 4 — Chassis ground:*** ***(B134) No. 6 — Chassis ground:*** ***(B137) No. 1 — Chassis ground:*** ***(B137) No. 3 — Chassis ground:***	Is the resistance less than 5 Ω?	Go to step **19**.	Repair the harness and connector. NOTE: In this case, repair the following item: • Open circuit of harness between ECM and engine ground • Poor contact of coupling connector
19	**CHECK ELECTRONIC THROTTLE CONTROL.** Measure the resistance between electronic throttle control terminals. ***Terminals*** ***No. 2 — No. 1:***	Is the resistance 50 Ω or less?	Go to step **20**.	Replace the electronic throttle control. <Ref. to FU(H4SO)-14, Throttle Body.>
20	**CHECK ELECTRONIC THROTTLE CONTROL.** Move the throttle valve to the fully open and fully closed positions with fingers. Check that the valve returns to the specified position when releasing fingers.	Does the valve return to the specified position? Standard value: 3 mm (0.12 in) from fully closed position	Repair the poor contact of ECM connector.	Replace the electronic throttle control. <Ref. to FU(H4SO)-14, Throttle Body.>

CZ:DTC P2102 THROTTLE ACTUATOR CONTROL MOTOR CIRCUIT LOW

DTC DETECTING CONDITION:

- Immediately at fault recognition
- GENERAL DESCRIPTION <Ref. to GD(H4SO)-180, DTC P2102 THROTTLE ACTUATOR CONTROL MOTOR CIRCUIT LOW, Diagnostic Trouble Code (DTC) Detecting Criteria.>

TROUBLE SYMPTOM:

- Improper idling
- Poor driving performance
- Engine stalls.

CAUTION:

After servicing or replacing faulty parts, perform Clear Memory Mode <Ref. to EN(H4SO)(diag)-54, OPERATION, Clear Memory Mode.>, and Inspection Mode <Ref. to EN(H4SO)(diag)-42, PROCEDURE, Inspection Mode.>.

WIRING DIAGRAM:

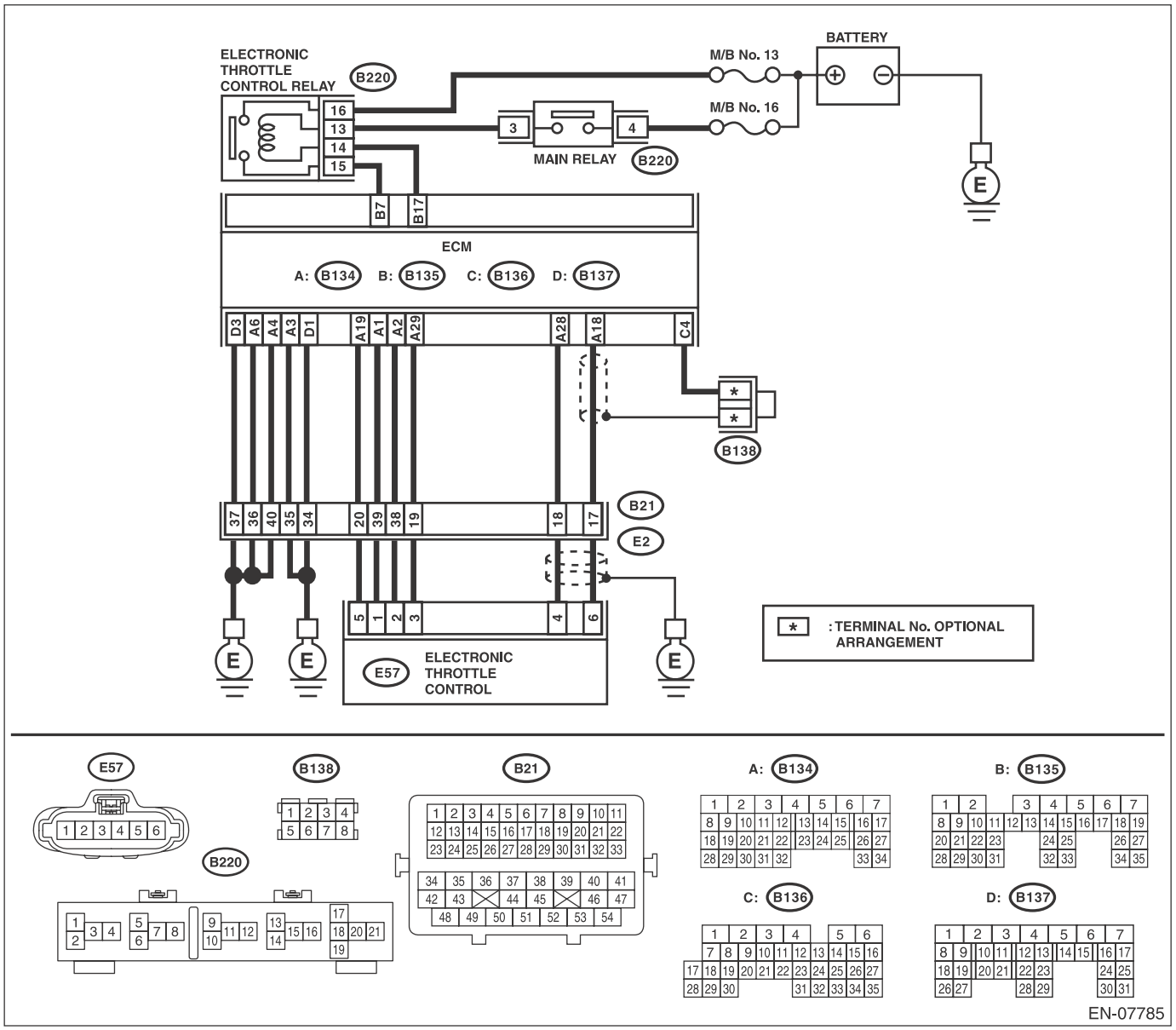

	Step	Check	Yes	No
1	**CHECK ELECTRONIC THROTTLE CONTROL RELAY.** 1) Turn the ignition switch to OFF. 2) Remove the electronic throttle control relay. 3) Connect the battery to terminals No. 13 and No. 14 of electronic throttle control relay. 4) Measure the resistance between electronic throttle control relay terminals. ***Terminals*** ***No. 15 — No. 16:***	Is the resistance less than 1 Ω?	Go to step **2**.	Replace the electronic throttle control relay. <Ref. to FU(H4SO)-44, Electronic Throttle Control Relay.>
2	**CHECK POWER SUPPLY OF ELECTRONIC THROTTLE CONTROL RELAY.** Measure the voltage between electronic throttle control relay connector and chassis ground. ***Connector & terminal*** ***(B220) No. 16 (+) — Chassis ground (–):***	Is the voltage 10 V or more?	Go to step **3**.	Repair the open or ground short circuit of power supply circuit.
3	**CHECK HARNESS BETWEEN ECM AND ELECTRONIC THROTTLE CONTROL RELAY CONNECTOR.** 1) Disconnect the connector from ECM. 2) Turn the ignition switch to ON. 3) Measure the voltage between electronic throttle control relay connector and chassis ground. ***Connector & terminal*** ***(B220) No. 14 (+) — Chassis ground (–):***	Is the voltage 10 V or more?	Repair the short circuit to power in the harness between ECM and electronic throttle control relay connector.	Go to step **4**.
4	**CHECK HARNESS BETWEEN ECM AND ELECTRONIC THROTTLE CONTROL RELAY CONNECTOR.** 1) Turn the ignition switch to OFF. 2) Measure the resistance between electronic throttle control relay connector and chassis ground. ***Connector & terminal*** ***(B220) No. 14 — Chassis ground:*** ***(B220) No. 15 — Chassis ground:***	Is the resistance 1 MΩ or more?	Go to step **5**.	Repair the short circuit in harness to ground between ECM and electronic throttle control relay connector.
5	**CHECK HARNESS BETWEEN ECM AND ELECTRONIC THROTTLE CONTROL RELAY CONNECTOR.** Measure the resistance between ECM and electronic throttle control relay connector. ***Connector & terminal*** ***(B135) No. 17 — (B220) No. 14:*** ***(B135) No. 7 — (B220) No. 15:***	Is the resistance less than 1 Ω?	Repair the poor contact of ECM connector.	Repair the open circuit in harness between ECM and electronic throttle control relay connector.

DA:DTC P2103 THROTTLE ACTUATOR CONTROL MOTOR CIRCUIT HIGH

DTC DETECTING CONDITION:

- Immediately at fault recognition
- GENERAL DESCRIPTION <Ref. to GD(H4SO)-181, DTC P2103 THROTTLE ACTUATOR CONTROL MOTOR CIRCUIT HIGH, Diagnostic Trouble Code (DTC) Detecting Criteria.>

CAUTION:

After servicing or replacing faulty parts, perform Clear Memory Mode <Ref. to EN(H4SO)(diag)-54, OPERATION, Clear Memory Mode.>, and Inspection Mode <Ref. to EN(H4SO)(diag)-42, PROCEDURE, Inspection Mode.>.

WIRING DIAGRAM:

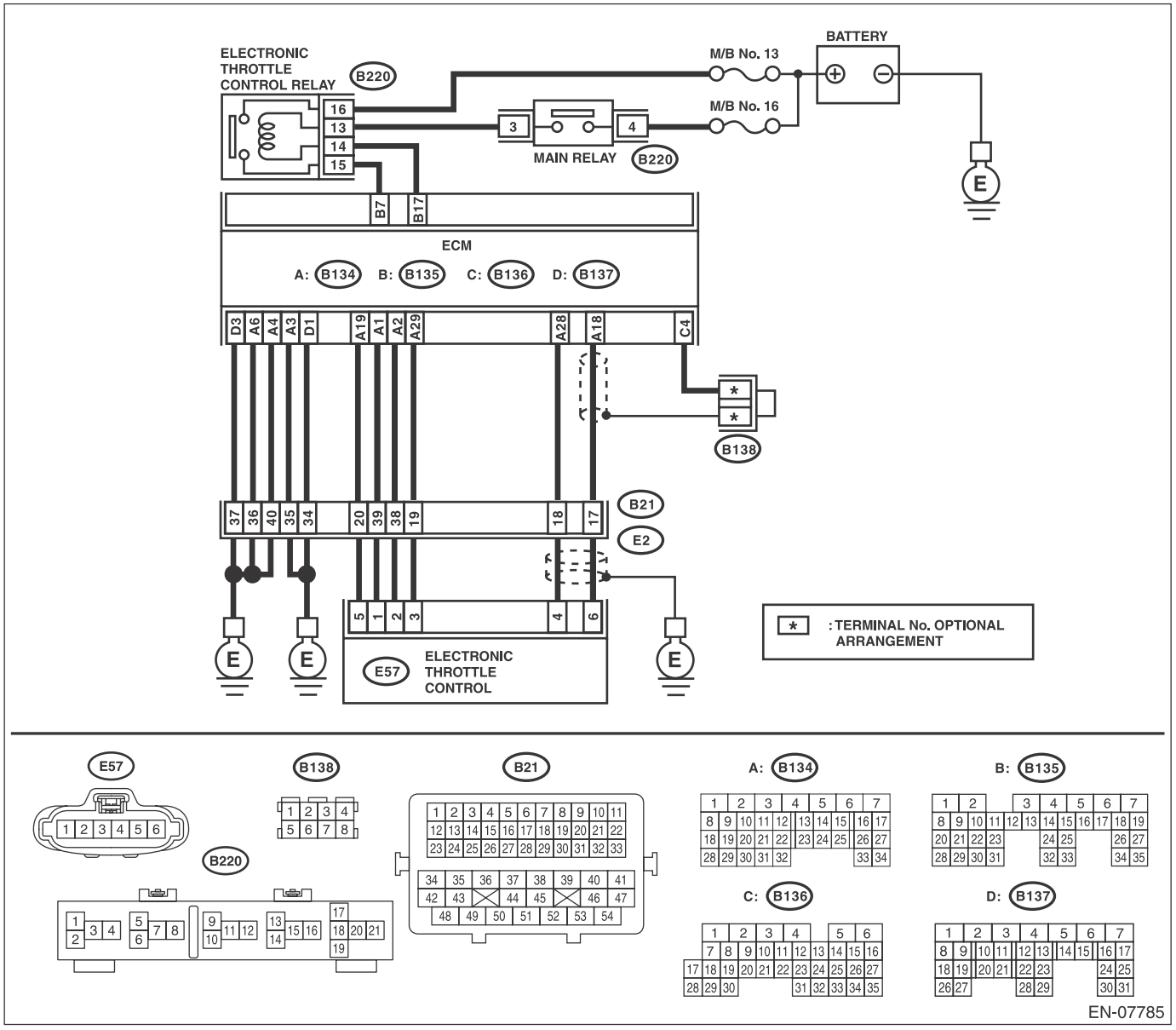

	Step	Check	Yes	No
1	**CHECK ELECTRONIC THROTTLE CONTROL RELAY.** 1) Turn the ignition switch to OFF. 2) Remove the electronic throttle control relay. 3) Measure the resistance between electronic throttle control relay terminals. ***Terminals*** ***No. 15 — No. 16:***	Is the resistance 1 MΩ or more?	Go to step **2**.	Replace the electronic throttle control relay. <Ref. to FU(H4SO)-44, Electronic Throttle Control Relay.>
2	**CHECK SHORT CIRCUIT OF ELECTRONIC THROTTLE CONTROL RELAY POWER SUPPLY.** 1) Turn the ignition switch to ON. 2) Measure the voltage between electronic throttle control relay connector and chassis ground. ***Connector & terminal*** ***(B220) No. 15 (+) — Chassis ground (–):***	Is the voltage 10 V or more?	Repair the short circuit to power in the harness between ECM and electronic throttle control relay connector.	Go to step **3**.
3	**CHECK HARNESS BETWEEN ECM AND ELECTRONIC THROTTLE CONTROL RELAY CONNECTOR.** 1) Turn the ignition switch to OFF. 2) Disconnect the connector from ECM. 3) Measure the resistance between ECM and chassis ground. ***Connector & terminal*** ***(B135) No. 17 — Chassis ground:***	Is the resistance 1 MΩ or more?	Repair the poor contact of ECM connector.	Repair the short circuit in harness to ground between ECM and electronic throttle control relay connector.

DB:DTC P2109 THROTTLE/PEDAL POSITION SENSOR “A” MINIMUM STOP PERFORMANCE

NOTE:
For the diagnostic procedure, refer to DTC P2101. <Ref. to EN(H4SO)(diag)-276, DTC P2101 THROTTLE ACTUATOR CONTROL MOTOR CIRCUIT RANGE/PERFORMANCE, Diagnostic Procedure with Diagnostic Trouble Code (DTC).>

DC:DTC P2122 THROTTLE/PEDAL POSITION SENSOR/SWITCH “D” CIRCUIT LOW INPUT

DTC DETECTING CONDITION:

- Immediately at fault recognition
- GENERAL DESCRIPTION <Ref. to GD(H4SO)-183, DTC P2122 THROTTLE/PEDAL POSITION SENSOR/SWITCH “D” CIRCUIT LOW INPUT, Diagnostic Trouble Code (DTC) Detecting Criteria.>

TROUBLE SYMPTOM:

- Improper idling
- Poor driving performance

CAUTION:

After servicing or replacing faulty parts, perform Clear Memory Mode <Ref. to EN(H4SO)(diag)-54, OPERATION, Clear Memory Mode.>, and Inspection Mode <Ref. to EN(H4SO)(diag)-42, PROCEDURE, Inspection Mode.>.

WIRING DIAGRAM:

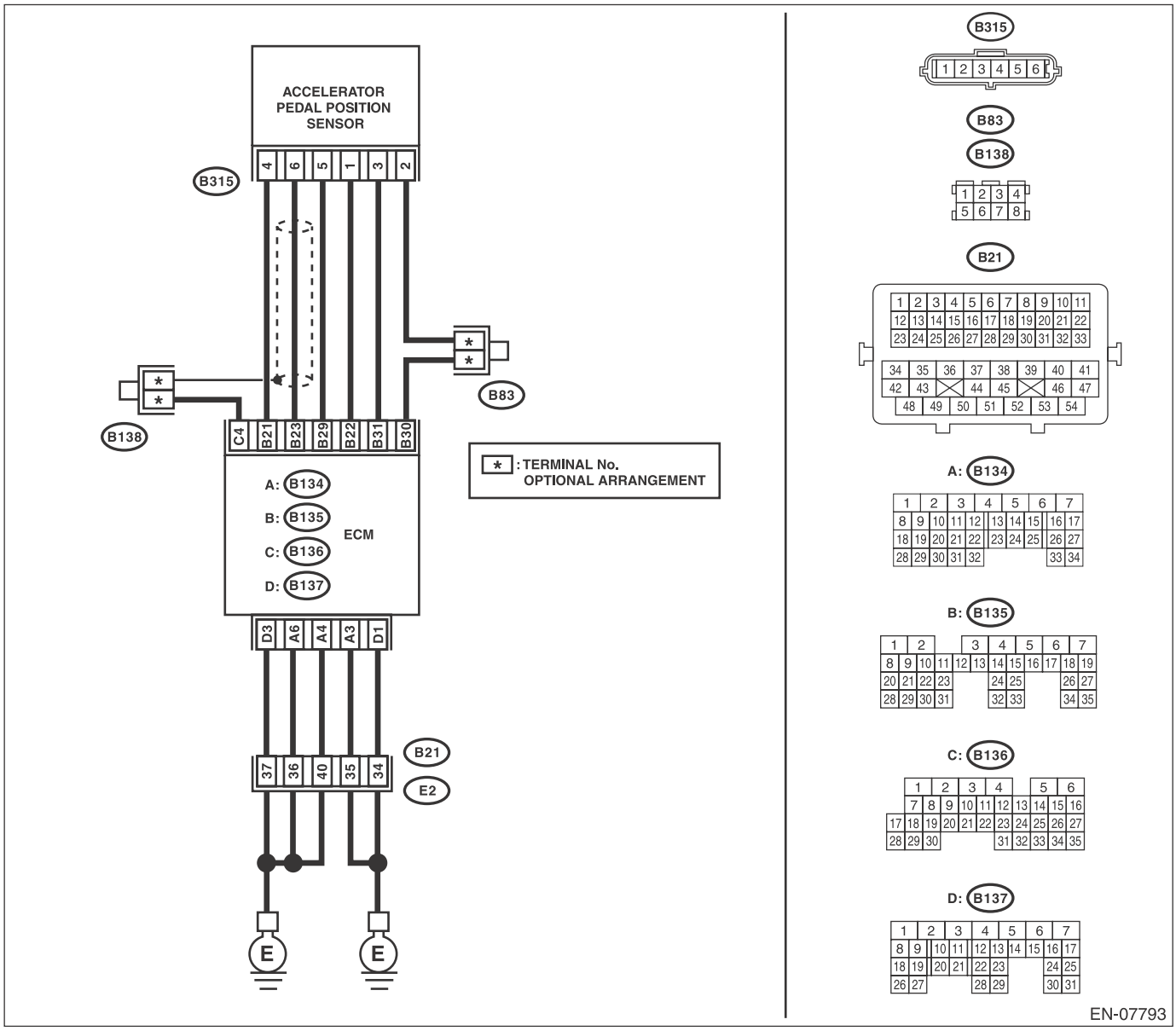

	Step	Check	Yes	No
1	**CHECK HARNESS BETWEEN ECM AND ACCELERATOR PEDAL POSITION SENSOR CONNECTOR.** 1) Turn the ignition switch to OFF. 2) Disconnect the connectors from ECM and accelerator pedal position sensor. 3) Measure the resistance between ECM and chassis ground. ***Connector & terminal*** ***(B135) No. 21 — Chassis ground:*** ***(B135) No. 23 — Chassis ground:*** ***(B135) No. 23 — (B136) No. 4:***	Is the resistance 1 MΩ or more?	Go to step **2**.	Repair the short circuit to ground in harness between ECM and accelerator pedal position sensor connector.
2	**CHECK SHORT CIRCUIT INSIDE THE ECM.** 1) Connect the connector to ECM. 2) Measure the resistance between accelerator pedal position sensor connector and chassis ground. ***Connector & terminal*** ***(B315) No. 6 — Chassis ground:***	Is the resistance 1 MΩ or more?	Replace the accelerator pedal. <Ref. to SP(H4SO)-4, Accelerator Pedal.>	Repair the short circuit to ground in harness between ECM and accelerator pedal position sensor connector. Replace the ECM if defective. <Ref. to FU(H4SO)-39, Engine Control Module (ECM).>

DD:DTC P2123 THROTTLE/PEDAL POSITION SENSOR/SWITCH “D” CIRCUIT HIGH INPUT

DTC DETECTING CONDITION:

- Immediately at fault recognition
- GENERAL DESCRIPTION <Ref. to GD(H4SO)-185, DTC P2123 THROTTLE/PEDAL POSITION SENSOR/SWITCH “D” CIRCUIT HIGH INPUT, Diagnostic Trouble Code (DTC) Detecting Criteria.>

TROUBLE SYMPTOM:

- Improper idling
- Poor driving performance

CAUTION:

After servicing or replacing faulty parts, perform Clear Memory Mode <Ref. to EN(H4SO)(diag)-54, OPERATION, Clear Memory Mode.>, and Inspection Mode <Ref. to EN(H4SO)(diag)-42, PROCEDURE, Inspection Mode.>.

WIRING DIAGRAM:

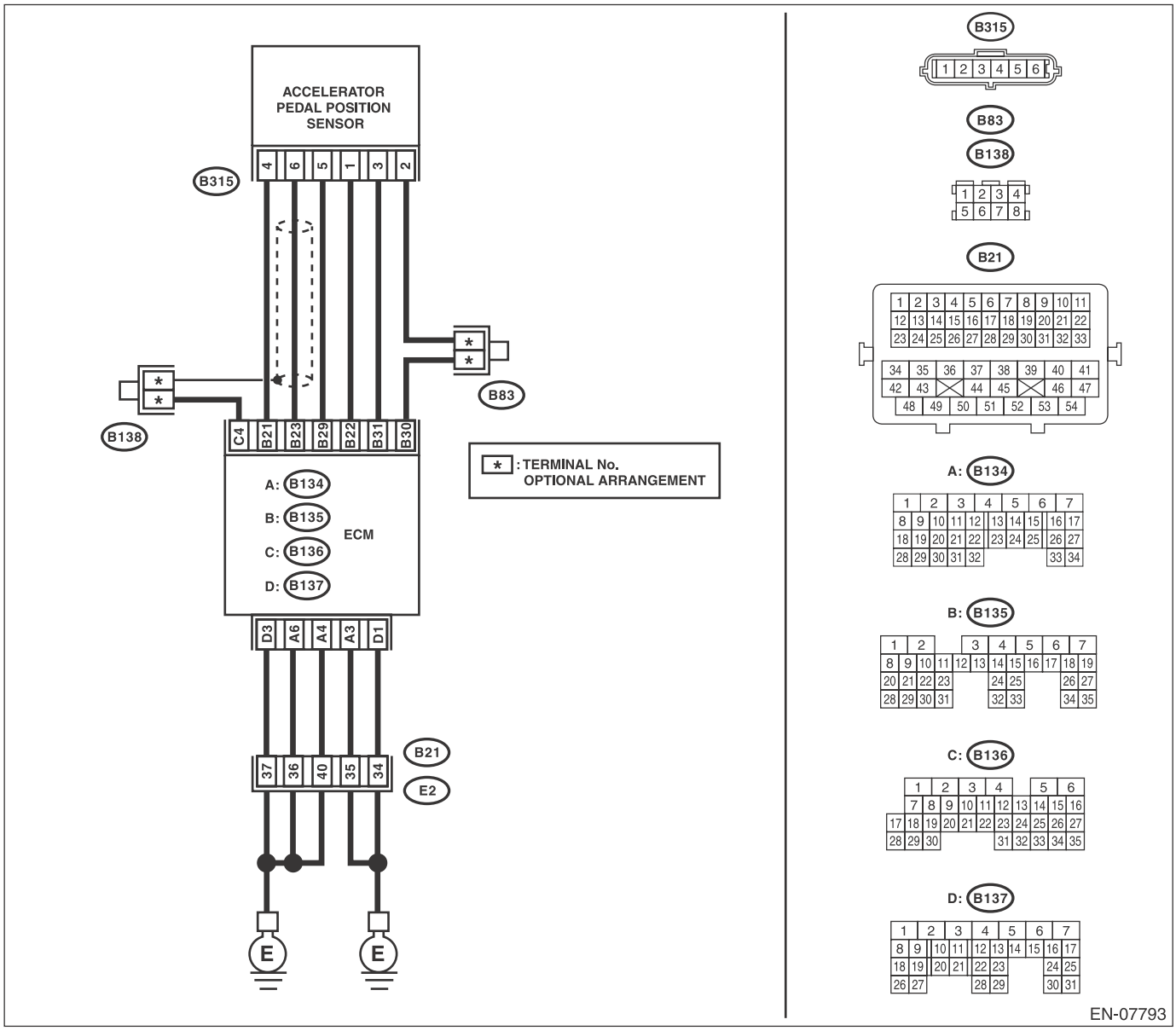

	Step	Check	Yes	No
1	**CHECK HARNESS BETWEEN ECM AND ACCELERATOR PEDAL POSITION SENSOR CONNECTOR.** 1) Turn the ignition switch to OFF. 2) Disconnect the connectors from ECM and accelerator pedal position sensor. 3) Measure the resistance of harness between ECM and accelerator pedal position sensor connector. ***Connector & terminal*** ***(B135) No. 23 — (B315) No. 6:*** ***(B135) No. 29 — (B315) No. 5:***	Is the resistance less than 1 Ω?	Go to step **2**.	Repair the open circuit of harness between ECM and accelerator pedal position sensor connector.
2	**CHECK HARNESS BETWEEN ECM AND ACCELERATOR PEDAL POSITION SENSOR CONNECTOR.** 1) Connect the connector to ECM. 2) Measure the resistance between accelerator pedal position sensor connector and chassis ground. ***Connector & terminal*** ***(B315) No. 5 — Chassis ground:***	Is the resistance less than 5 Ω?	Go to step **3**.	Repair the harness and connector. NOTE: In this case, repair the following item: • Open circuit of harness between ECM and engine ground • Poor contact of ECM connector • Poor contact of coupling connector
3	**CHECK HARNESS BETWEEN ECM AND ACCELERATOR PEDAL POSITION SENSOR CONNECTOR.** 1) Turn the ignition switch to ON. 2) Measure the voltage between accelerator pedal position sensor connector and chassis ground. ***Connector & terminal*** ***(B315) No. 6 (+) — Chassis ground (−):***	Is the voltage 5 V or more?	Repair the short circuit to power supply in the harness between the ECM and accelerator pedal position sensor connector.	Go to step **4**.
4	**CHECK HARNESS BETWEEN ECM AND ACCELERATOR PEDAL POSITION SENSOR CONNECTOR.** 1) Turn the ignition switch to OFF. 2) Disconnect the connector from ECM. 3) Measure the resistance between ECM connectors. ***Connector & terminal*** ***(B135) No. 21 — (B135) No. 23:***	Is the resistance 1 MΩ or more?	Repair the poor contact of accelerator pedal position sensor connector. Replace the accelerator pedal if defective. <Ref. to SP(H4SO)-4, Accelerator Pedal.>	Repair the short circuit to power supply in the harness between the ECM and accelerator pedal position sensor connector.

DE:DTC P2127 THROTTLE/PEDAL POSITION SENSOR/SWITCH “E” CIRCUIT LOW INPUT

DTC DETECTING CONDITION:

- Immediately at fault recognition
- GENERAL DESCRIPTION <Ref. to GD(H4SO)-187, DTC P2127 THROTTLE/PEDAL POSITION SENSOR/SWITCH “E” CIRCUIT LOW INPUT, Diagnostic Trouble Code (DTC) Detecting Criteria.>

TROUBLE SYMPTOM:

- Improper idling
- Poor driving performance

CAUTION:

After servicing or replacing faulty parts, perform Clear Memory Mode <Ref. to EN(H4SO)(diag)-54, OPERATION, Clear Memory Mode.>, and Inspection Mode <Ref. to EN(H4SO)(diag)-42, PROCEDURE, Inspection Mode.>.

WIRING DIAGRAM:

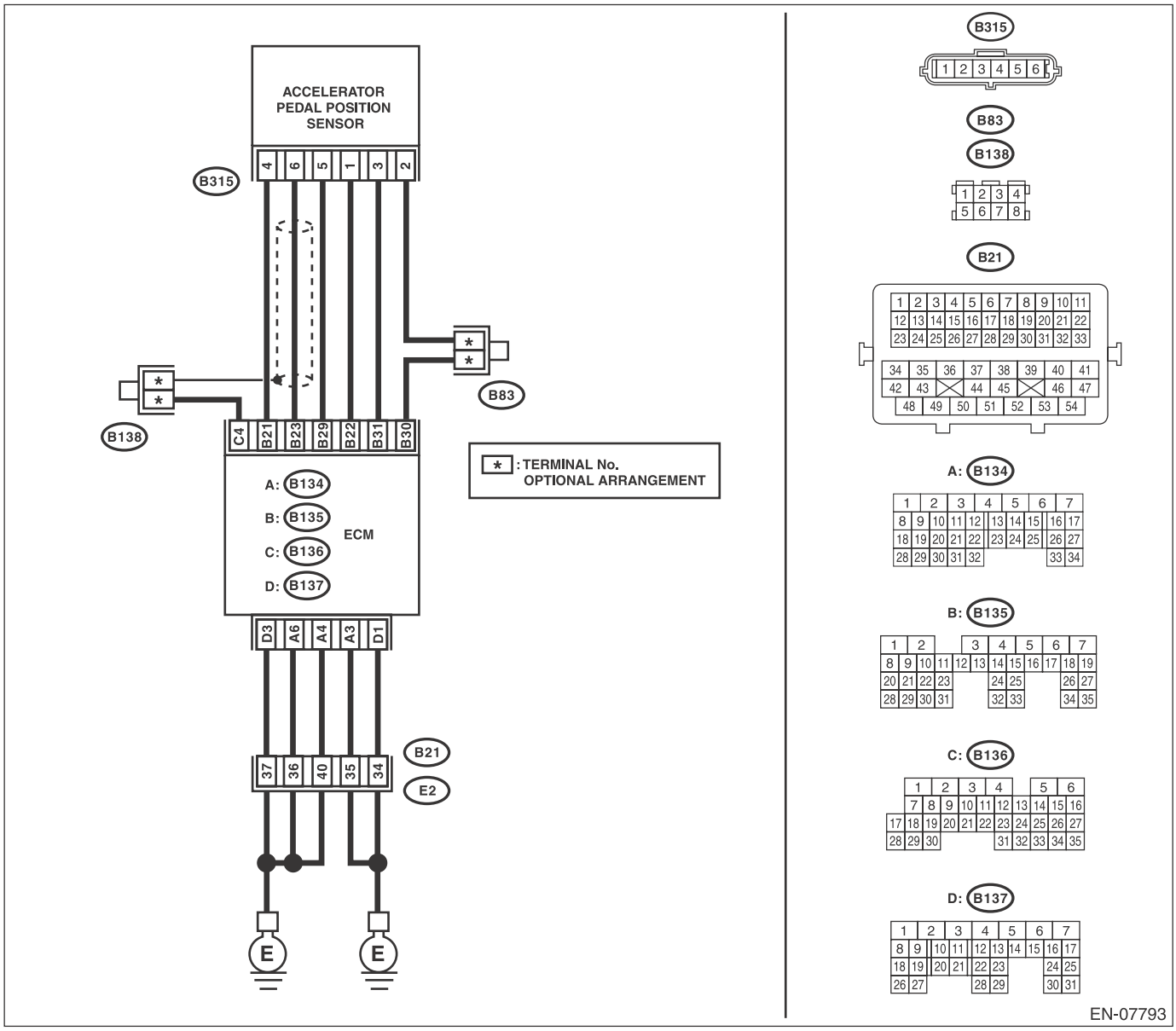

	Step	Check	Yes	No
1	**CHECK HARNESS BETWEEN ECM AND ACCELERATOR PEDAL POSITION SENSOR CONNECTOR.** 1) Turn the ignition switch to OFF. 2) Disconnect the connectors from ECM and accelerator pedal position sensor. 3) Measure the resistance between ECM and chassis ground. ***Connector & terminal*** ***(B135) No. 22 — Chassis ground:*** ***(B135) No. 31 — Chassis ground:***	Is the resistance 1 MΩ or more?	Go to step **2**.	Repair the short circuit to ground in harness between ECM and accelerator pedal position sensor connector.
2	**CHECK SHORT CIRCUIT INSIDE THE ECM.** 1) Connect the connector to ECM. 2) Measure the resistance between accelerator pedal position sensor connector and chassis ground. ***Connector & terminal*** ***(B315) No. 3 — Chassis ground:***	Is the resistance 1 MΩ or more?	Replace the accelerator pedal. <Ref. to SP(H4SO)-4, Accelerator Pedal.>	Repair the short circuit to ground in harness between ECM and accelerator pedal position sensor connector. Replace the ECM if defective. <Ref. to FU(H4SO)-39, Engine Control Module (ECM).>

DF:DTC P2128 THROTTLE/PEDAL POSITION SENSOR/SWITCH “E” CIRCUIT HIGH INPUT

DTC DETECTING CONDITION:

- Immediately at fault recognition
- GENERAL DESCRIPTION <Ref. to GD(H4SO)-189, DTC P2128 THROTTLE/PEDAL POSITION SENSOR/SWITCH “E” CIRCUIT HIGH INPUT, Diagnostic Trouble Code (DTC) Detecting Criteria.>

TROUBLE SYMPTOM:

- Improper idling
- Poor driving performance

CAUTION:

After servicing or replacing faulty parts, perform Clear Memory Mode <Ref. to EN(H4SO)(diag)-54, OPERATION, Clear Memory Mode.>, and Inspection Mode <Ref. to EN(H4SO)(diag)-42, PROCEDURE, Inspection Mode.>.

WIRING DIAGRAM:

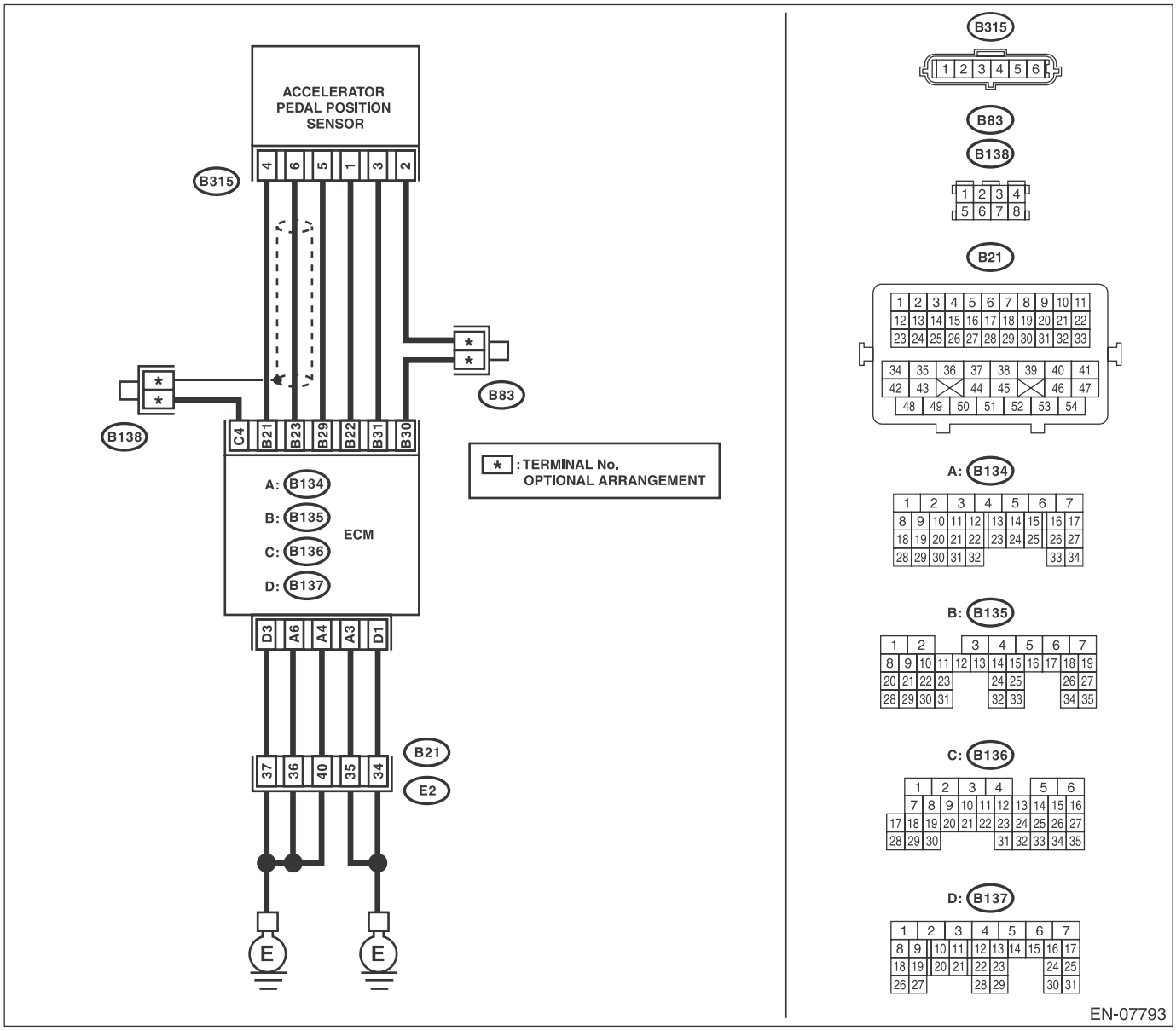

	Step	Check	Yes	No
1	**CHECK HARNESS BETWEEN ECM AND ACCELERATOR PEDAL POSITION SENSOR CONNECTOR.** 1) Turn the ignition switch to OFF. 2) Disconnect the connectors from ECM and accelerator pedal position sensor. 3) Measure the resistance of harness between ECM and accelerator pedal position sensor connector. ***Connector & terminal*** ***(B135) No. 31 — (B315) No. 3:*** ***(B135) No. 30 — (B315) No. 2:***	Is the resistance less than 1 Ω?	Go to step **2**.	Repair the harness and connector. NOTE: In this case, repair the following item: • Open circuit of harness between ECM and accelerator pedal position sensor connector. • Poor contact of joint connector
2	**CHECK HARNESS BETWEEN ECM AND ACCELERATOR PEDAL POSITION SENSOR CONNECTOR.** 1) Connect the connector to ECM. 2) Measure the resistance between accelerator pedal position sensor connector and chassis ground. ***Connector & terminal*** ***(B315) No. 2 — Chassis ground:***	Is the resistance less than 1 Ω?	Go to step **3**.	Repair the harness and connector. NOTE: In this case, repair the following item: • Open circuit of harness between ECM and engine ground • Poor contact of ECM connector • Poor contact of joint connector
3	**CHECK HARNESS BETWEEN ECM AND ACCELERATOR PEDAL POSITION SENSOR CONNECTOR.** 1) Turn the ignition switch to ON. 2) Measure the voltage between accelerator pedal position sensor connector and chassis ground. ***Connector & terminal*** ***(B315) No. 3 (+) — Chassis ground (–):***	Is the voltage 5 V or more?	Repair the short circuit to power supply in the harness between the ECM and accelerator pedal position sensor connector.	Go to step **4**.
4	**CHECK HARNESS BETWEEN ECM AND ACCELERATOR PEDAL POSITION SENSOR CONNECTOR.** 1) Turn the ignition switch to OFF. 2) Disconnect the connector from ECM. 3) Measure the resistance between ECM connectors. ***Connector & terminal*** ***(B135) No. 22 — (B135) No. 31:***	Is the resistance 1 MΩ or more?	Repair the poor contact of accelerator pedal position sensor connector. Replace the accelerator pedal if defective. <Ref. to SP(H4SO)-4, Accelerator Pedal.>	Repair the short circuit to power supply in the harness between the ECM and accelerator pedal position sensor connector.

DG:DTC P2135 THROTTLE/PEDAL POSITION SENSOR/SWITCH “A”/“B” VOLTAGE CORRELATION

DTC DETECTING CONDITION:

- Immediately at fault recognition
- GENERAL DESCRIPTION <Ref. to GD(H4SO)-191, DTC P2135 THROTTLE/PEDAL POSITION SENSOR/SWITCH “A”/“B” VOLTAGE CORRELATION, Diagnostic Trouble Code (DTC) Detecting Criteria.>

TROUBLE SYMPTOM:

- Improper idling
- Poor driving performance

CAUTION:

After servicing or replacing faulty parts, perform Clear Memory Mode <Ref. to EN(H4SO)(diag)-54, OPERATION, Clear Memory Mode.>, and Inspection Mode <Ref. to EN(H4SO)(diag)-42, PROCEDURE, Inspection Mode.>.

WIRING DIAGRAM:

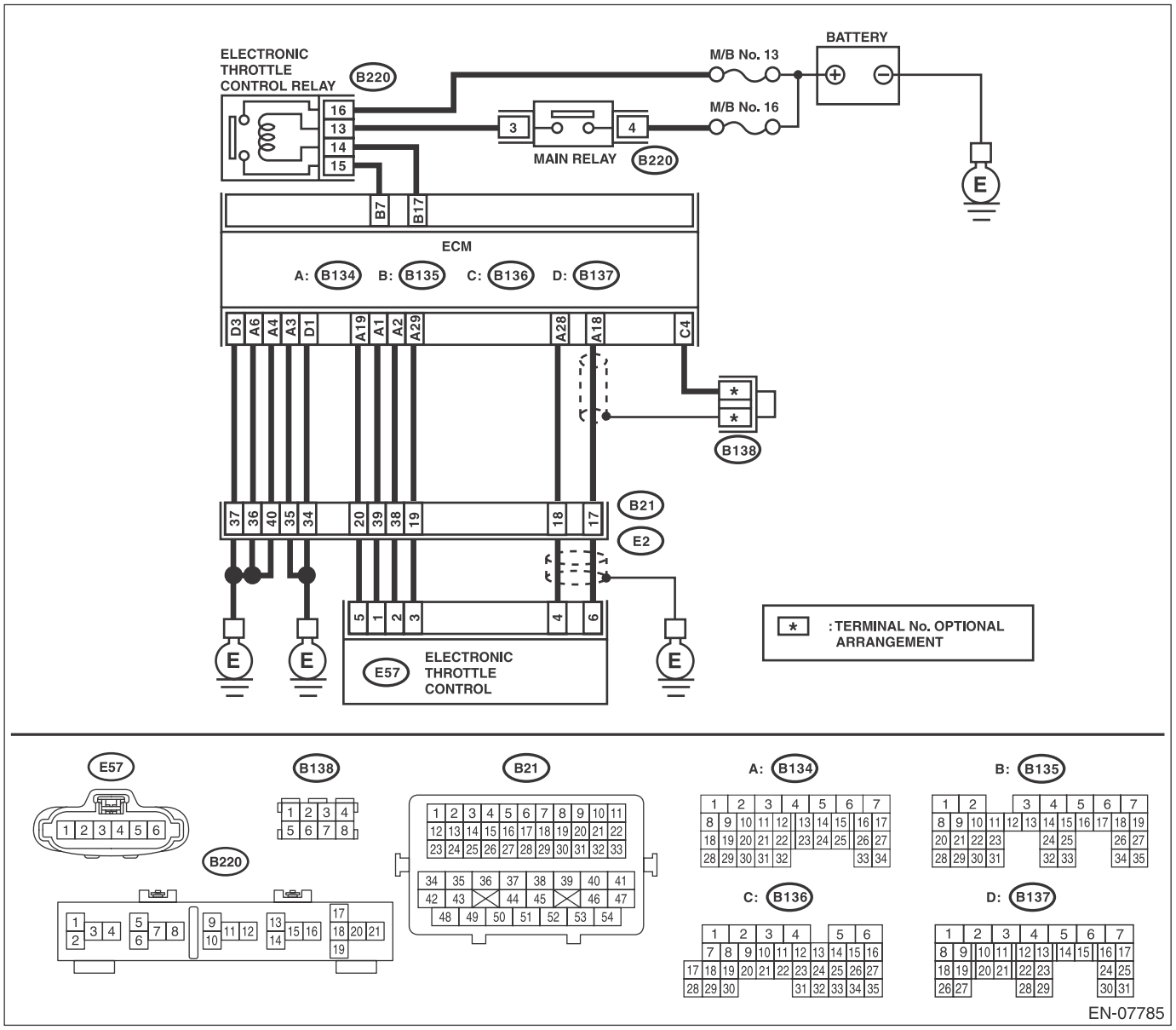

	Step	Check	Yes	No
1	**CHECK HARNESS BETWEEN ECM AND ELECTRONIC THROTTLE CONTROL CONNECTOR.** 1) Turn the ignition switch to OFF. 2) Disconnect the connectors from the ECM and electronic throttle control. 3) Measure the resistance between ECM and chassis ground. ***Connector & terminal*** ***(B134) No. 19 — Chassis ground:*** ***(B134) No. 18 — Chassis ground:*** ***(B134) No. 18 — (B136) No. 4:*** ***(B134) No. 28 — Chassis ground:***	Is the resistance 1 MΩ or more?	Go to step **2**.	Repair the ground short circuit of harness between ECM and electronic throttle control connector.
2	**CHECK SHORT CIRCUIT INSIDE THE ECM.** 1) Connect the connector to ECM. 2) Measure the resistance between electronic throttle control connector and engine ground. ***Connector & terminal*** ***(E57) No. 6 — Engine ground:*** ***(E57) No. 4 — Engine ground:***	Is the resistance 1 MΩ or more?	Go to step **3**.	Repair the ground short circuit of harness between ECM and electronic throttle control connector. Replace the ECM if defective. <Ref. to FU(H4SO)-39, Engine Control Module (ECM).>
3	**CHECK HARNESS BETWEEN ECM AND ELECTRONIC THROTTLE CONTROL CONNECTOR.** 1) Disconnect the connector from ECM. 2) Measure the resistance of harness between ECM and electronic throttle control connector. ***Connector & terminal*** ***(B134) No. 18 — (E57) No. 6:*** ***(B134) No. 28 — (E57) No. 4:*** ***(B134) No. 29 — (E57) No. 3:***	Is the resistance less than 1 Ω?	Go to step **4**.	Repair the harness and connector. NOTE: In this case, repair the following item: • Open circuit in harness between ECM and electronic throttle control connector • Poor contact of coupling connector
4	**CHECK HARNESS BETWEEN ECM AND ELECTRONIC THROTTLE CONTROL CONNECTOR.** 1) Connect the connector to ECM. 2) Measure the resistance between electronic throttle control connector and engine ground. ***Connector & terminal*** ***(E57) No. 3 — Engine ground:***	Is the resistance less than 5 Ω?	Go to step **5**.	Repair the harness and connector. NOTE: In this case, repair the following item: • Open circuit of harness between ECM and engine ground • Poor contact of ECM connector • Poor contact of coupling connector
5	**CHECK HARNESS BETWEEN ECM AND ELECTRONIC THROTTLE CONTROL CONNECTOR.** 1) Turn the ignition switch to ON. 2) Measure the voltage between electronic throttle control connector and engine ground. ***Connector & terminal*** ***(E57) No. 6 (+) — Engine ground (–):*** ***(E57) No. 4 (+) — Engine ground (–):***	Is the voltage 5 V or more?	Repair the short circuit of harness to power supply between ECM and electronic throttle control connector.	Go to step **6**.

	Step	Check	Yes	No
6	**CHECK HARNESS BETWEEN ECM AND ELECTRONIC THROTTLE CONTROL CONNECTOR.** 1) Turn the ignition switch to OFF. 2) Disconnect the connector from ECM. 3) Measure the resistance between ECM connectors. ***Connector & terminal*** ***(B134) No. 19 — (B134) No. 18:*** ***(B134) No. 19 — (B134) No. 28:***	Is the resistance 1 MΩ or more?	Repair the poor contact of electronic throttle control connector. Replace the electronic throttle control if defective. <Ref. to FU(H4SO)-14, Throttle Body.>	Repair the short circuit of harness to power supply between ECM and electronic throttle control connector.

DH:DTC P2138 THROTTLE/PEDAL POSITION SENSOR/SWITCH “D”/“E” VOLTAGE CORRELATION

DTC DETECTING CONDITION:

- Immediately at fault recognition
- GENERAL DESCRIPTION <Ref. to GD(H4SO)-193, DTC P2138 THROTTLE/PEDAL POSITION SENSOR/SWITCH “D”/“E” VOLTAGE CORRELATION, Diagnostic Trouble Code (DTC) Detecting Criteria.>

TROUBLE SYMPTOM:

- Improper idling
- Poor driving performance

CAUTION:
After servicing or replacing faulty parts, perform Clear Memory Mode <Ref. to EN(H4SO)(diag)-54, OPERATION, Clear Memory Mode.>, and Inspection Mode <Ref. to EN(H4SO)(diag)-42, PROCEDURE, Inspection Mode.>.

WIRING DIAGRAM:

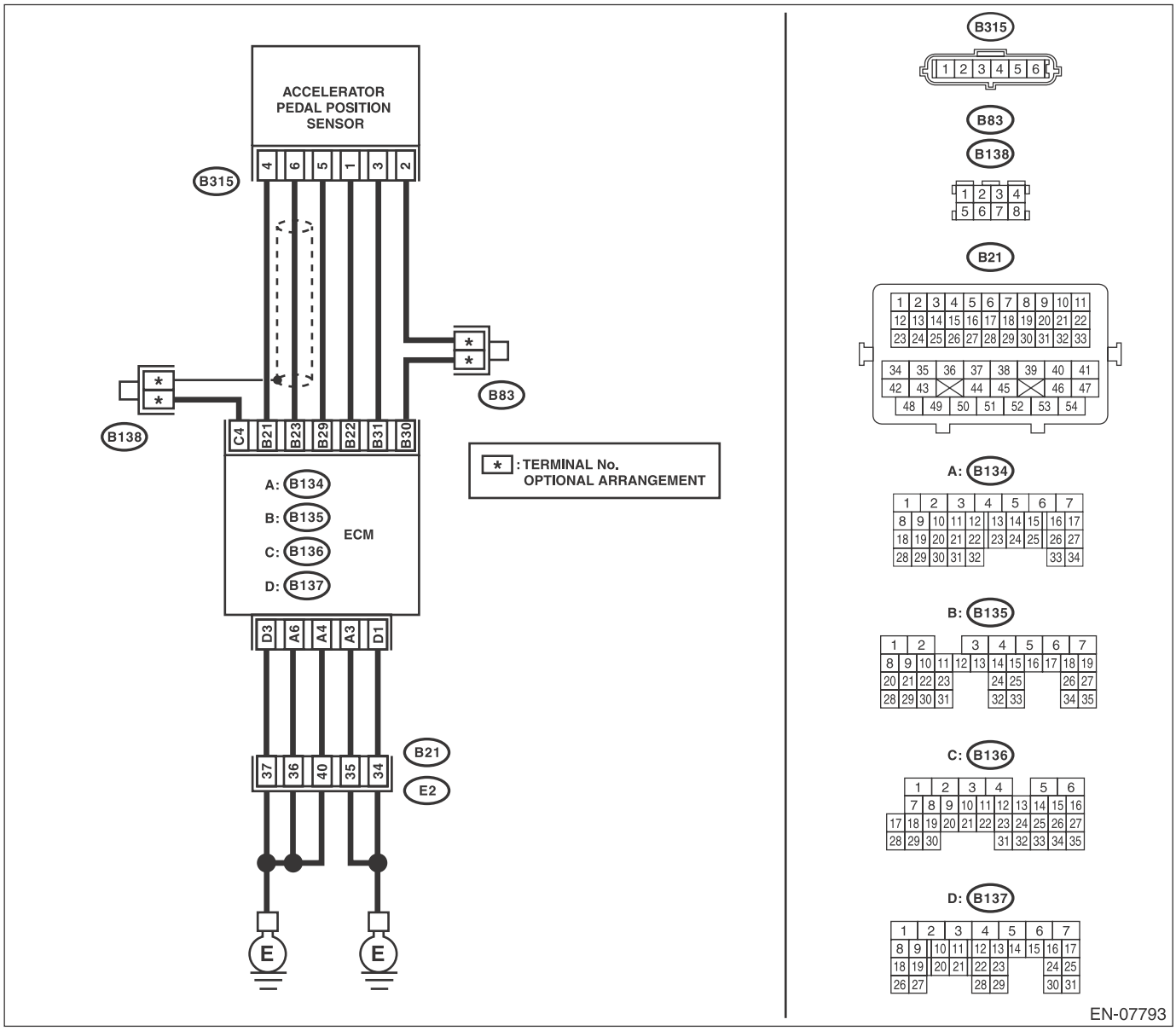

	Step	Check	Yes	No
1	**CHECK ACCELERATOR PEDAL POSITION SENSOR OUTPUT.** 1) Turn the ignition switch to ON. 2) Measure the voltage between ECM and chassis ground. ***Connector & terminal*** ***Main accelerator pedal position sensor signal*** ***(B135) No. 23 (+) — Chassis ground (–):*** ***Sub accelerator pedal position sensor signal*** ***(B135) No. 31 (+) — Chassis ground (–):***	Is the difference between the measured value of main accelerator pedal position sensor signal and the measured value of sub accelerator pedal position sensor signal 0 V?	Go to step **3.**	Go to step **2.**
2	**CHECK ACCELERATOR PEDAL POSITION SENSOR OUTPUT.** 1) Measure the voltage between accelerator pedal position sensor connector and chassis ground. ***Connector & terminal*** ***(B315) No. 6 (+) — Chassis ground (–):*** ***(B315) No. 3 (+) — Chassis ground (–):***	Is the difference between the measured value of main accelerator pedal position sensor signal and the measured value of sub accelerator pedal position sensor signal 0 V?	Replace the accelerator pedal. <Ref. to SP(H4SO)-4, Accelerator Pedal.>	Repair the harness and connector. NOTE: In this case, repair the following item: • Open circuit of harness between ECM and accelerator pedal position sensor connector. • Ground short circuit of harness between ECM and accelerator pedal position sensor connector.
3	**CHECK HARNESS BETWEEN ECM AND ACCELERATOR PEDAL POSITION SENSOR CONNECTOR.** Measure the resistance of harness between the accelerator pedal position sensor connector and chassis ground. ***Connector & terminal*** ***(B315) No. 5 — Chassis ground:*** ***(B315) No. 2 — Chassis ground:***	Is the resistance less than 5 Ω?	Repair the poor contact of ECM connector.	Repair the harness and connector. NOTE: In this case, repair the following item: • Open circuit of harness between ECM and accelerator pedal position sensor connector. • Open circuit of harness between ECM and engine ground • Poor contact of ECM connector • Poor contact of joint connector

DI: DTC P2227 BAROMETRIC PRESSURE CIRCUIT RANGE/PERFORMANCE

DTC DETECTING CONDITION:

- Detected when two consecutive driving cycles with fault occur.
- GENERAL DESCRIPTION <Ref. to GD(H4SO)-195, DTC P2227 BAROMETRIC PRESSURE CIRCUIT RANGE/PERFORMANCE, Diagnostic Trouble Code (DTC) Detecting Criteria.>

CAUTION:
After servicing or replacing faulty parts, perform Clear Memory Mode <Ref. to EN(H4SO)(diag)-54, OPERATION, Clear Memory Mode.>, and Inspection Mode <Ref. to EN(H4SO)(diag)-42, PROCEDURE, Inspection Mode.>.

Step		Check	Yes	No
1	**CHECK FOR ANY OTHER DTC ON DISPLAY.**	Is any other DTC displayed?	Check DTC using "List of Diagnostic Trouble Code (DTC)". <Ref. to EN(H4SO)(diag)-79, List of Diagnostic Trouble Code (DTC).>	Replace the ECM. <Ref. to FU(H4SO)-39, Engine Control Module (ECM).> NOTE: The barometric pressure sensor is built into the ECM.

DJ:DTC P2228 BAROMETRIC PRESSURE CIRCUIT LOW

DTC DETECTING CONDITION:

- Immediately at fault recognition
- GENERAL DESCRIPTION <Ref. to GD(H4SO)-196, DTC P2228 BAROMETRIC PRESSURE CIRCUIT LOW, Diagnostic Trouble Code (DTC) Detecting Criteria.>

CAUTION:
After servicing or replacing faulty parts, perform Clear Memory Mode <Ref. to EN(H4SO)(diag)-54, OPERATION, Clear Memory Mode.>, and Inspection Mode <Ref. to EN(H4SO)(diag)-42, PROCEDURE, Inspection Mode.>.

Step		Check	Yes	No
1	**CHECK FOR ANY OTHER DTC ON DISPLAY.**	Is any other DTC displayed?	Check DTC using "List of Diagnostic Trouble Code (DTC)". <Ref. to EN(H4SO)(diag)-79, List of Diagnostic Trouble Code (DTC).>	Replace the ECM. <Ref. to FU(H4SO)-39, Engine Control Module (ECM).> NOTE: The barometric pressure sensor is built into the ECM.

DK:DTC P2229 BAROMETRIC PRESSURE CIRCUIT HIGH

DTC DETECTING CONDITION:

- Immediately at fault recognition
- GENERAL DESCRIPTION <Ref. to GD(H4SO)-197, DTC P2229 BAROMETRIC PRESSURE CIRCUIT HIGH, Diagnostic Trouble Code (DTC) Detecting Criteria.>

CAUTION:
After servicing or replacing faulty parts, perform Clear Memory Mode <Ref. to EN(H4SO)(diag)-54, OPERATION, Clear Memory Mode.>, and Inspection Mode <Ref. to EN(H4SO)(diag)-42, PROCEDURE, Inspection Mode.>.

Step		Check	Yes	No
1	**CHECK FOR ANY OTHER DTC ON DISPLAY.**	Is any other DTC displayed?	Check DTC using "List of Diagnostic Trouble Code (DTC)". <Ref. to EN(H4SO)(diag)-79, List of Diagnostic Trouble Code (DTC).>	Replace the ECM. <Ref. to FU(H4SO)-39, Engine Control Module (ECM).> NOTE: The barometric pressure sensor is built into the ECM.

DL:DTC U0073 CAN FAILURE, BUS 'OFF' DETECTION

NOTE:
For the diagnostic procedure, refer to LAN section. <Ref. to LAN(diag)-2, Basic Diagnostic Procedure.>

DM:DTC U0101 CAN (TCU) DATA NOT LOADED

NOTE:
For the diagnostic procedure, refer to LAN section. <Ref. to LAN(diag)-2, Basic Diagnostic Procedure.>

DN:DTC U0122 CAN (VDC) DATA NOT LOADED

NOTE:
For the diagnostic procedure, refer to LAN section. <Ref. to LAN(diag)-2, Basic Diagnostic Procedure.>

DO:DTC U0140 CAN (BCU) DATA NOT LOADED

NOTE:
For the diagnostic procedure, refer to LAN section. <Ref. to LAN(diag)-2, Basic Diagnostic Procedure.>

DP:DTC U0402 CAN (TCU) DATA ABNORMAL

NOTE:
For the diagnostic procedure, refer to LAN section. <Ref. to LAN(diag)-2, Basic Diagnostic Procedure.>

DQ:DTC U0416 CAN (VDC) DATA ABNORMAL

NOTE:
For the diagnostic procedure, refer to LAN section. <Ref. to LAN(diag)-2, Basic Diagnostic Procedure.>

DR:DTC U0422 CAN (BCU) DATA ABNORMAL

NOTE:
For the diagnostic procedure, refer to LAN section. <Ref. to LAN(diag)-2, Basic Diagnostic Procedure.>

19.General Diagnostic Table

A: INSPECTION

1. ENGINE

NOTE:
Malfunction of parts other than those listed is also possible. <Ref. to ME(H4SO)-96, Engine Trouble in General.>

Symptoms	Problem parts
1. Engine stalls during idling.	1) Manifold absolute pressure sensor 2) Mass air flow and intake air temperature sensor 3) Ignition parts (*1) 4) Engine coolant temperature sensor (*2) 5) Crankshaft position sensor (*3) 6) Camshaft position sensor (*3) 7) Fuel injection parts (*4) 8) Electronic throttle control
2. Rough idling	1) Manifold absolute pressure sensor 2) Mass air flow and intake air temperature sensor 3) Engine coolant temperature sensor (*2) 4) Ignition parts (*1) 5) Air intake system (*5) 6) Fuel injection parts (*4) 7) Electronic throttle control 8) Crankshaft position sensor (*3) 9) Camshaft position sensor (*3) 10) Oxygen sensor 11) Fuel pump and fuel pump relay 12) EGR valve 13) Oil switching solenoid valve
3. Engine does not return to idle.	1) Engine coolant temperature sensor 2) Electronic throttle control 3) Manifold absolute pressure sensor 4) Mass air flow and intake air temperature sensor 5) EGR valve 6) Accelerator pedal position sensor 7) Oil temperature sensor
4. Poor acceleration	1) Manifold absolute pressure sensor 2) Mass air flow and intake air temperature sensor 3) Electronic throttle control 4) Fuel injection parts (*4) 5) Fuel pump and fuel pump relay 6) Engine coolant temperature sensor (*2) 7) Crankshaft position sensor (*3) 8) Camshaft position sensor (*3) 9) Engine torque control signal circuit 10) Ignition parts (*1) 11) EGR valve 12) Accelerator pedal position sensor 13) Oil temperature sensor 14) Oil switching solenoid valve

Symptoms	Problem parts
5. Engine stalls, hesitates, or sputters at acceleration.	1) Manifold absolute pressure sensor 2) Mass air flow and intake air temperature sensor 3) Engine coolant temperature sensor (*2) 4) Crankshaft position sensor (*3) 5) Camshaft position sensor (*3) 6) Purge control solenoid valve 7) Fuel injection parts (*4) 8) Electronic throttle control 9) Fuel pump and fuel pump relay 10) EGR valve
6. Surging	1) Mass air flow and intake air temperature sensor 2) Manifold absolute pressure sensor 3) Engine coolant temperature sensor (*2) 4) Crankshaft position sensor (*3) 5) Camshaft position sensor (*3) 6) Fuel injection parts (*4) 7) Electronic throttle control 8) Fuel pump and fuel pump relay 9) EGR valve
7. Spark knock	1) Mass air flow and intake air temperature sensor 2) Manifold absolute pressure sensor 3) Engine coolant temperature sensor 4) Knock sensor 5) Fuel injection parts (*4) 6) Fuel pump and fuel pump relay 7) EGR valve 8) Oil switching solenoid valve
8. After-burning in exhaust system	1) Mass air flow and intake air temperature sensor 2) Manifold absolute pressure sensor 3) Engine coolant temperature sensor (*2) 4) Fuel injection parts (*4) 5) Fuel pump and fuel pump relay

*1: Check ignition coil and spark plug.
*2: Indicate the symptom occurring only in cold temperatures.
*3: Ensure the secure installation.
*4: Check fuel injector, fuel pressure regulator and fuel filter.
*5: Inspect air leak in air intake system.

GENERAL DESCRIPTION

GD(H4SO)

Page

1. List of Diagnostic Trouble Code (DTC) 2
2. Diagnostic Trouble Code (DTC) Detecting Criteria 8

1. List of Diagnostic Trouble Code (DTC)

A: LIST

DTC	Item	Index
P0026	Intake Valve Control Solenoid Circuit Range/Performance (Bank 1)	<Ref. to GD(H4SO)-8, DTC P0026 INTAKE VALVE CONTROL SOLENOID CIRCUIT RANGE/PERFORMANCE (BANK 1), Diagnostic Trouble Code (DTC) Detecting Criteria.>
P0028	Intake Valve Control Solenoid Circuit Range/Performance (Bank 2)	<Ref. to GD(H4SO)-10, DTC P0028 INTAKE VALVE CONTROL SOLENOID CIRCUIT RANGE/PERFORMANCE (BANK 2), Diagnostic Trouble Code (DTC) Detecting Criteria.>
P0030	HO2S Heater Control Circuit (Bank 1 Sensor 1)	<Ref. to GD(H4SO)-11, DTC P0030 HO2S HEATER CONTROL CIRCUIT (BANK 1 SENSOR 1), Diagnostic Trouble Code (DTC) Detecting Criteria.>
P0031	HO2S Heater Control Circuit Low (Bank 1 Sensor 1)	<Ref. to GD(H4SO)-13, DTC P0031 HO2S HEATER CONTROL CIRCUIT LOW (BANK 1 SENSOR 1), Diagnostic Trouble Code (DTC) Detecting Criteria.>
P0032	HO2S Heater Control Circuit High (Bank 1 Sensor 1)	<Ref. to GD(H4SO)-15, DTC P0032 HO2S HEATER CONTROL CIRCUIT HIGH (BANK 1 SENSOR 1), Diagnostic Trouble Code (DTC) Detecting Criteria.>
P0037	HO2S Heater Control Circuit Low (Bank 1 Sensor 2)	<Ref. to GD(H4SO)-17, DTC P0037 HO2S HEATER CONTROL CIRCUIT LOW (BANK 1 SENSOR 2), Diagnostic Trouble Code (DTC) Detecting Criteria.>
P0038	HO2S Heater Control Circuit High (Bank 1 Sensor 2)	<Ref. to GD(H4SO)-19, DTC P0038 HO2S HEATER CONTROL CIRCUIT HIGH (BANK 1 SENSOR 2), Diagnostic Trouble Code (DTC) Detecting Criteria.>
P0068	MAP/MAF - Throttle Position Correlation	<Ref. to GD(H4SO)-21, DTC P0068 MAP/MAF - THROTTLE POSITION CORRELATION, Diagnostic Trouble Code (DTC) Detecting Criteria.>
P0076	Intake Valve Control Solenoid Circuit Low (Bank 1)	<Ref. to GD(H4SO)-23, DTC P0076 INTAKE VALVE CONTROL SOLENOID CIRCUIT LOW (BANK 1), Diagnostic Trouble Code (DTC) Detecting Criteria.>
P0077	Intake Valve Control Solenoid Circuit High (Bank 1)	<Ref. to GD(H4SO)-24, DTC P0077 INTAKE VALVE CONTROL SOLENOID CIRCUIT HIGH (BANK 1), Diagnostic Trouble Code (DTC) Detecting Criteria.>
P0082	Intake Valve Control Solenoid Circuit Low (Bank 2)	<Ref. to GD(H4SO)-24, DTC P0082 INTAKE VALVE CONTROL SOLENOID CIRCUIT LOW (BANK 2), Diagnostic Trouble Code (DTC) Detecting Criteria.>
P0083	Intake Valve Control Solenoid Circuit High (Bank 2)	<Ref. to GD(H4SO)-24, DTC P0083 INTAKE VALVE CONTROL SOLENOID CIRCUIT HIGH (BANK 2), Diagnostic Trouble Code (DTC) Detecting Criteria.>
P0101	Mass or Volume Air Flow Circuit Range/Performance	<Ref. to GD(H4SO)-25, DTC P0101 MASS OR VOLUME AIR FLOW CIRCUIT RANGE/PERFORMANCE, Diagnostic Trouble Code (DTC) Detecting Criteria.>
P0102	Mass or Volume Air Flow Circuit Low Input	<Ref. to GD(H4SO)-27, DTC P0102 MASS OR VOLUME AIR FLOW CIRCUIT LOW INPUT, Diagnostic Trouble Code (DTC) Detecting Criteria.>
P0103	Mass or Volume Air Flow Circuit High Input	<Ref. to GD(H4SO)-28, DTC P0103 MASS OR VOLUME AIR FLOW CIRCUIT HIGH INPUT, Diagnostic Trouble Code (DTC) Detecting Criteria.>
P0107	Manifold Absolute Pressure/Barometric Pressure Circuit Low Input	<Ref. to GD(H4SO)-29, DTC P0107 MANIFOLD ABSOLUTE PRESSURE/BAROMETRIC PRESSURE CIRCUIT LOW INPUT, Diagnostic Trouble Code (DTC) Detecting Criteria.>
P0108	Manifold Absolute Pressure/Barometric Pressure Circuit High Input	<Ref. to GD(H4SO)-30, DTC P0108 MANIFOLD ABSOLUTE PRESSURE/BAROMETRIC PRESSURE CIRCUIT HIGH INPUT, Diagnostic Trouble Code (DTC) Detecting Criteria.>
P0111	Intake Air Temperature Sensor 1 Circuit Range/Performance	<Ref. to GD(H4SO)-31, DTC P0111 INTAKE AIR TEMPERATURE SENSOR 1 CIRCUIT RANGE/PERFORMANCE, Diagnostic Trouble Code (DTC) Detecting Criteria.>
P0112	Intake Air Temperature Sensor 1 Circuit Low	<Ref. to GD(H4SO)-33, DTC P0112 INTAKE AIR TEMPERATURE SENSOR 1 CIRCUIT LOW, Diagnostic Trouble Code (DTC) Detecting Criteria.>
P0113	Intake Air Temperature Sensor 1 Circuit High	<Ref. to GD(H4SO)-34, DTC P0113 INTAKE AIR TEMPERATURE SENSOR 1 CIRCUIT HIGH, Diagnostic Trouble Code (DTC) Detecting Criteria.>
P0117	Engine Coolant Temperature Circuit Low	<Ref. to GD(H4SO)-35, DTC P0117 ENGINE COOLANT TEMPERATURE CIRCUIT LOW, Diagnostic Trouble Code (DTC) Detecting Criteria.>

DTC	Item	Index
P0118	Engine Coolant Temperature Circuit High	<Ref. to GD(H4SO)-36, DTC P0118 ENGINE COOLANT TEMPERATURE CIRCUIT HIGH, Diagnostic Trouble Code (DTC) Detecting Criteria.>
P0122	Throttle/Pedal Position Sensor/Switch “A” Circuit Low	<Ref. to GD(H4SO)-37, DTC P0122 THROTTLE/PEDAL POSITION SENSOR/SWITCH “A” CIRCUIT LOW, Diagnostic Trouble Code (DTC) Detecting Criteria.>
P0123	Throttle/Pedal Position Sensor/Switch “A” Circuit High	<Ref. to GD(H4SO)-38, DTC P0123 THROTTLE/PEDAL POSITION SENSOR/SWITCH “A” CIRCUIT HIGH, Diagnostic Trouble Code (DTC) Detecting Criteria.>
P0125	Insufficient Coolant Temperature for Closed Loop Fuel Control	<Ref. to GD(H4SO)-39, DTC P0125 INSUFFICIENT COOLANT TEMPERATURE FOR CLOSED LOOP FUEL CONTROL, Diagnostic Trouble Code (DTC) Detecting Criteria.>
P0126	Insufficient Engine Coolant Temperature for Stable Operation	<Ref. to GD(H4SO)-41, DTC P0126 INSUFFICIENT ENGINE COOLANT TEMPERATURE FOR STABLE OPERATION, Diagnostic Trouble Code (DTC) Detecting Criteria.>
P0128	Coolant Thermostat (Engine Coolant Temperature Below Thermostat Regulating Temperature)	<Ref. to GD(H4SO)-43, DTC P0128 COOLANT THERMOSTAT (ENGINE COOLANT TEMPERATURE BELOW THERMOSTAT REGULATING TEMPERATURE), Diagnostic Trouble Code (DTC) Detecting Criteria.>
P0131	O2 Sensor Circuit Low Voltage (Bank 1 Sensor 1)	<Ref. to GD(H4SO)-45, DTC P0131 O2 SENSOR CIRCUIT LOW VOLTAGE (BANK 1 SENSOR 1), Diagnostic Trouble Code (DTC) Detecting Criteria.>
P0132	O2 Sensor Circuit High Voltage (Bank 1 Sensor 1)	<Ref. to GD(H4SO)-47, DTC P0132 O2 SENSOR CIRCUIT HIGH VOLTAGE (BANK 1 SENSOR 1), Diagnostic Trouble Code (DTC) Detecting Criteria.>
P0133	O2 Sensor Circuit Slow Response (Bank 1 Sensor 1)	<Ref. to GD(H4SO)-49, DTC P0133 O2 SENSOR CIRCUIT SLOW RESPONSE (BANK 1 SENSOR 1), Diagnostic Trouble Code (DTC) Detecting Criteria.>
P0134	O2 Sensor Circuit No Activity Detected (Bank 1 Sensor 1)	<Ref. to GD(H4SO)-52, DTC P0134 O2 SENSOR CIRCUIT NO ACTIVITY DETECTED (BANK 1 SENSOR 1), Diagnostic Trouble Code (DTC) Detecting Criteria.>
P0137	O2 Sensor Circuit Low Voltage (Bank 1 Sensor 2)	<Ref. to GD(H4SO)-54, DTC P0137 O2 SENSOR CIRCUIT LOW VOLTAGE (BANK 1 SENSOR 2), Diagnostic Trouble Code (DTC) Detecting Criteria.>
P0138	O2 Sensor Circuit High Voltage (Bank 1 Sensor 2)	<Ref. to GD(H4SO)-56, DTC P0138 O2 SENSOR CIRCUIT HIGH VOLTAGE (BANK 1 SENSOR 2), Diagnostic Trouble Code (DTC) Detecting Criteria.>
P0139	O2 Sensor Circuit Slow Response (Bank 1 Sensor 2)	<Ref. to GD(H4SO)-57, DTC P0139 O2 SENSOR CIRCUIT SLOW RESPONSE (BANK 1 SENSOR 2), Diagnostic Trouble Code (DTC) Detecting Criteria.>
P0140	O2 Sensor Circuit No Activity Detected (Bank 1 Sensor 2)	<Ref. to GD(H4SO)-65, DTC P0140 O2 SENSOR CIRCUIT NO ACTIVITY DETECTED (BANK1 SENSOR2), Diagnostic Trouble Code (DTC) Detecting Criteria.>
P0141	O2 Sensor Heater Circuit (Bank1 Sensor2)	<Ref. to GD(H4SO)-67, DTC P0141 O2 SENSOR HEATER CIRCUIT (BANK1 SENSOR2), Diagnostic Trouble Code (DTC) Detecting Criteria.>
P0171	System Too Lean (Bank 1)	<Ref. to GD(H4SO)-69, DTC P0171 SYSTEM TOO LEAN (BANK 1), Diagnostic Trouble Code (DTC) Detecting Criteria.>
P0172	System Too Rich (Bank 1)	<Ref. to GD(H4SO)-70, DTC P0172 SYSTEM TOO RICH (BANK 1), Diagnostic Trouble Code (DTC) Detecting Criteria.>
P0181	Fuel Temperature Sensor “A” Circuit Range/Performance	<Ref. to GD(H4SO)-71, DTC P0181 FUEL TEMPERATURE SENSOR “A” CIRCUIT RANGE/PERFORMANCE, Diagnostic Trouble Code (DTC) Detecting Criteria.>
P0182	Fuel Temperature Sensor “A” Circuit Low Input	<Ref. to GD(H4SO)-74, DTC P0182 FUEL TEMPERATURE SENSOR “A” CIRCUIT LOW INPUT, Diagnostic Trouble Code (DTC) Detecting Criteria.>
P0183	Fuel Temperature Sensor “A” Circuit High Input	<Ref. to GD(H4SO)-75, DTC P0183 FUEL TEMPERATURE SENSOR “A” CIRCUIT HIGH INPUT, Diagnostic Trouble Code (DTC) Detecting Criteria.>
P0196	Engine Oil Temperature Sensor Circuit Range/Performance	<Ref. to GD(H4SO)-76, DTC P0196 ENGINE OIL TEMPERATURE SENSOR CIRCUIT RANGE/PERFORMANCE, Diagnostic Trouble Code (DTC) Detecting Criteria.>
P0197	Engine Oil Temperature Sensor Low	<Ref. to GD(H4SO)-78, DTC P0197 ENGINE OIL TEMPERATURE SENSOR LOW, Diagnostic Trouble Code (DTC) Detecting Criteria.>

DTC	Item	Index
P0198	Engine Oil Temperature Sensor High	<Ref. to GD(H4SO)-79, DTC P0198 ENGINE OIL TEMPERATURE SENSOR HIGH, Diagnostic Trouble Code (DTC) Detecting Criteria.>
P0222	Throttle/Pedal Position Sensor/Switch “B” Circuit Low	<Ref. to GD(H4SO)-80, DTC P0222 THROTTLE/PEDAL POSITION SENSOR/SWITCH “B” CIRCUIT LOW, Diagnostic Trouble Code (DTC) Detecting Criteria.>
P0223	Throttle/Pedal Position Sensor/Switch “B” Circuit High	<Ref. to GD(H4SO)-81, DTC P0223 THROTTLE/PEDAL POSITION SENSOR/SWITCH “B” CIRCUIT HIGH, Diagnostic Trouble Code (DTC) Detecting Criteria.>
P0301	Cylinder 1 Misfire Detected	<Ref. to GD(H4SO)-82, DTC P0301 CYLINDER 1 MISFIRE DETECTED, Diagnostic Trouble Code (DTC) Detecting Criteria.>
P0302	Cylinder 2 Misfire Detected	<Ref. to GD(H4SO)-87, DTC P0302 CYLINDER 2 MISFIRE DETECTED, Diagnostic Trouble Code (DTC) Detecting Criteria.>
P0303	Cylinder 3 Misfire Detected	<Ref. to GD(H4SO)-87, DTC P0303 CYLINDER 3 MISFIRE DETECTED, Diagnostic Trouble Code (DTC) Detecting Criteria.>
P0304	Cylinder 4 Misfire Detected	<Ref. to GD(H4SO)-87, DTC P0304 CYLINDER 4 MISFIRE DETECTED, Diagnostic Trouble Code (DTC) Detecting Criteria.>
P0327	Knock Sensor 1 Circuit Low (Bank 1 or Single Sensor)	<Ref. to GD(H4SO)-88, DTC P0327 KNOCK SENSOR 1 CIRCUIT LOW (BANK 1 OR SINGLE SENSOR), Diagnostic Trouble Code (DTC) Detecting Criteria.>
P0328	Knock Sensor 1 Circuit High (Bank 1 or Single Sensor)	<Ref. to GD(H4SO)-90, DTC P0328 KNOCK SENSOR 1 CIRCUIT HIGH (BANK 1 OR SINGLE SENSOR), Diagnostic Trouble Code (DTC) Detecting Criteria.>
P0335	Crankshaft Position Sensor “A” Circuit	<Ref. to GD(H4SO)-92, DTC P0335 CRANKSHAFT POSITION SENSOR “A” CIRCUIT, Diagnostic Trouble Code (DTC) Detecting Criteria.>
P0336	Crankshaft Position Sensor “A” Circuit Range/Performance	<Ref. to GD(H4SO)-94, DTC P0336 CRANKSHAFT POSITION SENSOR “A” CIRCUIT RANGE/PERFORMANCE, Diagnostic Trouble Code (DTC) Detecting Criteria.>
P0340	Camshaft Position Sensor “A” Circuit (Bank 1 or Single Sensor)	<Ref. to GD(H4SO)-96, DTC P0340 CAMSHAFT POSITION SENSOR “A” CIRCUIT (BANK 1 OR SINGLE SENSOR), Diagnostic Trouble Code (DTC) Detecting Criteria.>
P0341	Camshaft Position Sensor “A” Circuit Range/Performance (Bank 1 or Single Sensor)	<Ref. to GD(H4SO)-98, DTC P0341 CAMSHAFT POSITION SENSOR “A” CIRCUIT RANGE/PERFORMANCE (BANK 1 OR SINGLE SENSOR), Diagnostic Trouble Code (DTC) Detecting Criteria.>
P0400	Exhaust Gas Recirculation Flow	<Ref. to GD(H4SO)-100, DTC P0400 EXHAUST GAS RECIRCULATION FLOW, Diagnostic Trouble Code (DTC) Detecting Criteria.>
P0420	Catalyst System Efficiency Below Threshold (Bank 1)	<Ref. to GD(H4SO)-103, DTC P0420 CATALYST SYSTEM EFFICIENCY BELOW THRESHOLD (BANK 1), Diagnostic Trouble Code (DTC) Detecting Criteria.>
P0442	Evaporative Emission Control System Leak Detected (Small Leak)	<Ref. to GD(H4SO)-105, DTC P0442 EVAPORATIVE EMISSION CONTROL SYSTEM LEAK DETECTED (SMALL LEAK), Diagnostic Trouble Code (DTC) Detecting Criteria.>
P0447	Evaporative Emission Control System Vent Control Circuit Open	<Ref. to GD(H4SO)-118, DTC P0447 EVAPORATIVE EMISSION CONTROL SYSTEM VENT CONTROL CIRCUIT OPEN, Diagnostic Trouble Code (DTC) Detecting Criteria.>
P0448	Evaporative Emission Control System Vent Control Circuit Shorted	<Ref. to GD(H4SO)-120, DTC P0448 EVAPORATIVE EMISSION CONTROL SYSTEM VENT CONTROL CIRCUIT SHORTED, Diagnostic Trouble Code (DTC) Detecting Criteria.>
P0451	Evaporative Emission Control System Pressure Sensor	<Ref. to GD(H4SO)-122, DTC P0451 EVAPORATIVE EMISSION CONTROL SYSTEM PRESSURE SENSOR, Diagnostic Trouble Code (DTC) Detecting Criteria.>
P0452	Evaporative Emission Control System Pressure Sensor Low Input	<Ref. to GD(H4SO)-124, DTC P0452 EVAPORATIVE EMISSION CONTROL SYSTEM PRESSURE SENSOR LOW INPUT, Diagnostic Trouble Code (DTC) Detecting Criteria.>
P0453	Evaporative Emission Control System Pressure Sensor High Input	<Ref. to GD(H4SO)-126, DTC P0453 EVAPORATIVE EMISSION CONTROL SYSTEM PRESSURE SENSOR HIGH INPUT, Diagnostic Trouble Code (DTC) Detecting Criteria.>

DTC	Item	Index
P0456	Evaporative Emission Control System Leak Detected (Very Small Leak)	<Ref. to GD(H4SO)-127, DTC P0456 EVAPORATIVE EMISSION CONTROL SYSTEM LEAK DETECTED (VERY SMALL LEAK), Diagnostic Trouble Code (DTC) Detecting Criteria.>
P0457	Evaporative Emission Control System Leak Detected (Fuel Cap Loose/Off)	<Ref. to GD(H4SO)-127, DTC P0457 EVAPORATIVE EMISSION CONTROL SYSTEM LEAK DETECTED (FUEL CAP LOOSE/OFF), Diagnostic Trouble Code (DTC) Detecting Criteria.>
P0458	Evaporative Emission System Purge Control Valve Circuit Low	<Ref. to GD(H4SO)-128, DTC P0458 EVAPORATIVE EMISSION SYSTEM PURGE CONTROL VALVE CIRCUIT LOW, Diagnostic Trouble Code (DTC) Detecting Criteria.>
P0459	Evaporative Emission System Purge Control Valve Circuit High	<Ref. to GD(H4SO)-130, DTC P0459 EVAPORATIVE EMISSION SYSTEM PURGE CONTROL VALVE CIRCUIT HIGH, Diagnostic Trouble Code (DTC) Detecting Criteria.>
P0461	Fuel Level Sensor “A” Circuit Range/Performance	<Ref. to GD(H4SO)-132, DTC P0461 FUEL LEVEL SENSOR “A” CIRCUIT RANGE/PERFORMANCE, Diagnostic Trouble Code (DTC) Detecting Criteria.>
P0462	Fuel Level Sensor “A” Circuit Low	<Ref. to GD(H4SO)-134, DTC P0462 FUEL LEVEL SENSOR “A” CIRCUIT LOW, Diagnostic Trouble Code (DTC) Detecting Criteria.>
P0463	Fuel Level Sensor “A” Circuit High	<Ref. to GD(H4SO)-136, DTC P0463 FUEL LEVEL SENSOR “A” CIRCUIT HIGH, Diagnostic Trouble Code (DTC) Detecting Criteria.>
P0464	Fuel Level Sensor Circuit Intermittent	<Ref. to GD(H4SO)-138, DTC P0464 FUEL LEVEL SENSOR CIRCUIT INTERMITTENT, Diagnostic Trouble Code (DTC) Detecting Criteria.>
P0500	Vehicle Speed Sensor “A”	<Ref. to GD(H4SO)-141, DTC P0500 VEHICLE SPEED SENSOR “A”, Diagnostic Trouble Code (DTC) Detecting Criteria.>
P0506	Idle Air Control System RPM Lower Than Expected	<Ref. to GD(H4SO)-142, DTC P0506 IDLE AIR CONTROL SYSTEM RPM LOWER THAN EXPECTED, Diagnostic Trouble Code (DTC) Detecting Criteria.>
P0507	Idle Air Control System RPM Higher Than Expected	<Ref. to GD(H4SO)-143, DTC P0507 IDLE AIR CONTROL SYSTEM RPM HIGHER THAN EXPECTED, Diagnostic Trouble Code (DTC) Detecting Criteria.>
P0512	Starter Request Circuit	<Ref. to GD(H4SO)-144, DTC P0512 STARTER REQUEST CIRCUIT, Diagnostic Trouble Code (DTC) Detecting Criteria.>
P0513	Incorrect Immobilizer Key	<Ref. to GD(H4SO)-145, DTC P0513 INCORRECT IMMOBILIZER KEY, Diagnostic Trouble Code (DTC) Detecting Criteria.>
P0604	Internal Control Module Random Access Memory (RAM) Error	<Ref. to GD(H4SO)-146, DTC P0604 INTERNAL CONTROL MODULE RANDOM ACCESS MEMORY (RAM) ERROR, Diagnostic Trouble Code (DTC) Detecting Criteria.>
P0605	Internal Control Module Read Only Memory (ROM) Error	<Ref. to GD(H4SO)-147, DTC P0605 INTERNAL CONTROL MODULE READ ONLY MEMORY (ROM) ERROR, Diagnostic Trouble Code (DTC) Detecting Criteria.>
P0607	Throttle Control System Circuit Range/Performance	<Ref. to GD(H4SO)-148, DTC P0607 THROTTLE CONTROL SYSTEM CIRCUIT RANGE/PERFORMANCE, Diagnostic Trouble Code (DTC) Detecting Criteria.>
P0638	Throttle Actuator Control Range/Performance (Bank 1)	<Ref. to GD(H4SO)-150, DTC P0638 THROTTLE ACTUATOR CONTROL RANGE/PERFORMANCE (BANK 1), Diagnostic Trouble Code (DTC) Detecting Criteria.>
P0700	Transmission Control System (MIL Request)	<Ref. to GD(H4SO)-152, DTC P0700 TRANSMISSION CONTROL SYSTEM (MIL REQUEST), Diagnostic Trouble Code (DTC) Detecting Criteria.>
P0851	Park/Neutral Switch Input Circuit Low (AT Model)	<Ref. to GD(H4SO)-153, DTC P0851 PARK/NEUTRAL SWITCH INPUT CIRCUIT LOW (AT MODEL), Diagnostic Trouble Code (DTC) Detecting Criteria.>
P0851	Neutral Switch Input Circuit Low (MT Model)	<Ref. to GD(H4SO)-154, DTC P0851 NEUTRAL SWITCH INPUT CIRCUIT LOW (MT MODEL), Diagnostic Trouble Code (DTC) Detecting Criteria.>
P0852	Park/Neutral Switch Input Circuit High (AT Model)	<Ref. to GD(H4SO)-155, DTC P0852 PARK/NEUTRAL SWITCH INPUT CIRCUIT HIGH (AT MODEL), Diagnostic Trouble Code (DTC) Detecting Criteria.>
P0852	Neutral Switch Input Circuit High (MT Model)	<Ref. to GD(H4SO)-156, DTC P0852 NEUTRAL SWITCH INPUT CIRCUIT HIGH (MT MODEL), Diagnostic Trouble Code (DTC) Detecting Criteria.>

DTC	Item	Index
P1152	O2 Sensor Circuit Range/Performance (Low) (Bank1 Sensor1)	<Ref. to GD(H4SO)-157, DTC P1152 O2 SENSOR CIRCUIT RANGE/PERFORMANCE (LOW) (BANK1 SENSOR1), Diagnostic Trouble Code (DTC) Detecting Criteria.>
P1153	O2 Sensor Circuit Range/Performance (High) (Bank1 Sensor1)	<Ref. to GD(H4SO)-159, DTC P1153 O2 SENSOR CIRCUIT RANGE/PERFORMANCE (HIGH) (BANK1 SENSOR1), Diagnostic Trouble Code (DTC) Detecting Criteria.>
P1160	Return Spring Failure	<Ref. to GD(H4SO)-161, DTC P1160 RETURN SPRING FAILURE, Diagnostic Trouble Code (DTC) Detecting Criteria.>
P1443	Vent Control Solenoid Valve Function Problem	<Ref. to GD(H4SO)-162, DTC P1443 VENT CONTROL SOLENOID VALVE FUNCTION PROBLEM, Diagnostic Trouble Code (DTC) Detecting Criteria.>
P1492	EGR Solenoid Valve Signal #1 Circuit Malfunction (Low Input)	<Ref. to GD(H4SO)-164, DTC P1492 EGR SOLENOID VALVE SIGNAL #1 CIRCUIT MALFUNCTION (LOW INPUT), Diagnostic Trouble Code (DTC) Detecting Criteria.>
P1493	EGR Solenoid Valve Signal #1 Circuit Malfunction (High Input)	<Ref. to GD(H4SO)-166, DTC P1493 EGR SOLENOID VALVE SIGNAL #1 CIRCUIT MALFUNCTION (HIGH INPUT), Diagnostic Trouble Code (DTC) Detecting Criteria.>
P1494	EGR Solenoid Valve Signal #2 Circuit Malfunction (Low Input)	<Ref. to GD(H4SO)-168, DTC P1494 EGR SOLENOID VALVE SIGNAL #2 CIRCUIT MALFUNCTION (LOW INPUT), Diagnostic Trouble Code (DTC) Detecting Criteria.>
P1495	EGR Solenoid Valve Signal #2 Circuit Malfunction (High Input)	<Ref. to GD(H4SO)-168, DTC P1495 EGR SOLENOID VALVE SIGNAL #2 CIRCUIT MALFUNCTION (HIGH INPUT), Diagnostic Trouble Code (DTC) Detecting Criteria.>
P1496	EGR Solenoid Valve Signal #3 Circuit Malfunction (Low Input)	<Ref. to GD(H4SO)-168, DTC P1496 EGR SOLENOID VALVE SIGNAL #3 CIRCUIT MALFUNCTION (LOW INPUT), Diagnostic Trouble Code (DTC) Detecting Criteria.>
P1497	EGR Solenoid Valve Signal #3 Circuit Malfunction (High Input)	<Ref. to GD(H4SO)-168, DTC P1497 EGR SOLENOID VALVE SIGNAL #3 CIRCUIT MALFUNCTION (HIGH INPUT), Diagnostic Trouble Code (DTC) Detecting Criteria.>
P1498	EGR Solenoid Valve Signal #4 Circuit Malfunction (Low Input)	<Ref. to GD(H4SO)-168, DTC P1498 EGR SOLENOID VALVE SIGNAL #4 CIRCUIT MALFUNCTION (LOW INPUT), Diagnostic Trouble Code (DTC) Detecting Criteria.>
P1499	EGR Solenoid Valve Signal #4 Circuit Malfunction (High Input)	<Ref. to GD(H4SO)-168, DTC P1499 EGR SOLENOID VALVE SIGNAL #4 CIRCUIT MALFUNCTION (HIGH INPUT), Diagnostic Trouble Code (DTC) Detecting Criteria.>
P1518	Starter Switch Circuit Low Input	<Ref. to GD(H4SO)-169, DTC P1518 STARTER SWITCH CIRCUIT LOW INPUT, Diagnostic Trouble Code (DTC) Detecting Criteria.>
P1560	Back-Up Voltage Circuit Malfunction	<Ref. to GD(H4SO)-170, DTC P1560 BACK-UP VOLTAGE CIRCUIT MALFUNCTION, Diagnostic Trouble Code (DTC) Detecting Criteria.>
P1570	Antenna	<Ref. to GD(H4SO)-171, DTC P1570 ANTENNA, Diagnostic Trouble Code (DTC) Detecting Criteria.>
P1571	Reference Code Incompatibility	<Ref. to GD(H4SO)-171, DTC P1571 REFERENCE CODE INCOMPATIBILITY, Diagnostic Trouble Code (DTC) Detecting Criteria.>
P1572	IMM Circuit Failure	<Ref. to GD(H4SO)-171, DTC P1572 IMM CIRCUIT FAILURE (EXCEPT ANTENNA CIRCUIT), Diagnostic Trouble Code (DTC) Detecting Criteria.>
P1574	Key Communication Failure	<Ref. to GD(H4SO)-171, DTC P1574 KEY COMMUNICATION FAILURE, Diagnostic Trouble Code (DTC) Detecting Criteria.>
P1576	EGI Control Module EEPROM	<Ref. to GD(H4SO)-171, DTC P1576 EGI CONTROL MODULE EEPROM, Diagnostic Trouble Code (DTC) Detecting Criteria.>
P1577	IMM Control Module EEPROM	<Ref. to GD(H4SO)-171, DTC P1577 IMM CONTROL MODULE EEPROM, Diagnostic Trouble Code (DTC) Detecting Criteria.>
P1578	Meter Failure	<Ref. to GD(H4SO)-171, DTC P1578 METER FAILURE, Diagnostic Trouble Code (DTC) Detecting Criteria.>
P1602	Control Module Programming Error	<Ref. to GD(H4SO)-172, DTC P1602 CONTROL MODULE PROGRAMMING ERROR, Diagnostic Trouble Code (DTC) Detecting Criteria.>
P2096	Post Catalyst Fuel Trim System Too Lean (Bank 1)	<Ref. to GD(H4SO)-175, DTC P2096 POST CATALYST FUEL TRIM SYSTEM TOO LEAN (BANK 1), Diagnostic Trouble Code (DTC) Detecting Criteria.>

DTC	Item	Index
P2097	Post Catalyst Fuel Trim System Too Rich (Bank 1)	<Ref. to GD(H4SO)-177, DTC P2097 POST CATALYST FUEL TRIM SYSTEM TOO RICH (BANK 1), Diagnostic Trouble Code (DTC) Detecting Criteria.>
P2101	Throttle Actuator Control Motor Circuit Range/Performance	<Ref. to GD(H4SO)-179, DTC P2101 THROTTLE ACTUATOR CONTROL MOTOR CIRCUIT RANGE/PERFORMANCE, Diagnostic Trouble Code (DTC) Detecting Criteria.>
P2102	Throttle Actuator Control Motor Circuit Low	<Ref. to GD(H4SO)-180, DTC P2102 THROTTLE ACTUATOR CONTROL MOTOR CIRCUIT LOW, Diagnostic Trouble Code (DTC) Detecting Criteria.>
P2103	Throttle Actuator Control Motor Circuit High	<Ref. to GD(H4SO)-181, DTC P2103 THROTTLE ACTUATOR CONTROL MOTOR CIRCUIT HIGH, Diagnostic Trouble Code (DTC) Detecting Criteria.>
P2109	Throttle/Pedal Position Sensor “A” Minimum Stop Performance	<Ref. to GD(H4SO)-182, DTC P2109 THROTTLE/PEDAL POSITION SENSOR “A” MINIMUM STOP PERFORMANCE, Diagnostic Trouble Code (DTC) Detecting Criteria.>
P2122	Throttle/Pedal Position Sensor/Switch “D” Circuit Low Input	<Ref. to GD(H4SO)-183, DTC P2122 THROTTLE/PEDAL POSITION SENSOR/SWITCH “D” CIRCUIT LOW INPUT, Diagnostic Trouble Code (DTC) Detecting Criteria.>
P2123	Throttle/Pedal Position Sensor/Switch “D” Circuit High Input	<Ref. to GD(H4SO)-185, DTC P2123 THROTTLE/PEDAL POSITION SENSOR/SWITCH “D” CIRCUIT HIGH INPUT, Diagnostic Trouble Code (DTC) Detecting Criteria.>
P2127	Throttle/Pedal Position Sensor/Switch “E” Circuit Low Input	<Ref. to GD(H4SO)-187, DTC P2127 THROTTLE/PEDAL POSITION SENSOR/SWITCH “E” CIRCUIT LOW INPUT, Diagnostic Trouble Code (DTC) Detecting Criteria.>
P2128	Throttle/Pedal Position Sensor/Switch “E” Circuit High Input	<Ref. to GD(H4SO)-189, DTC P2128 THROTTLE/PEDAL POSITION SENSOR/SWITCH “E” CIRCUIT HIGH INPUT, Diagnostic Trouble Code (DTC) Detecting Criteria.>
P2135	Throttle/Pedal Position Sensor/Switch “A”/“B” Voltage Correlation	<Ref. to GD(H4SO)-191, DTC P2135 THROTTLE/PEDAL POSITION SENSOR/SWITCH “A”/“B” VOLTAGE CORRELATION, Diagnostic Trouble Code (DTC) Detecting Criteria.>
P2138	Throttle/Pedal Position Sensor/Switch “D”/“E” Voltage Correlation	<Ref. to GD(H4SO)-193, DTC P2138 THROTTLE/PEDAL POSITION SENSOR/SWITCH “D”/“E” VOLTAGE CORRELATION, Diagnostic Trouble Code (DTC) Detecting Criteria.>
P2227	Atmospheric Pressure Sensor Range/ Performance	<Ref. to GD(H4SO)-195, DTC P2227 BAROMETRIC PRESSURE CIRCUIT RANGE/PERFORMANCE, Diagnostic Trouble Code (DTC) Detecting Criteria.>
P2228	Barometric Pressure Circuit Low	<Ref. to GD(H4SO)-196, DTC P2228 BAROMETRIC PRESSURE CIRCUIT LOW, Diagnostic Trouble Code (DTC) Detecting Criteria.>
P2229	Barometric Pressure Circuit High	<Ref. to GD(H4SO)-197, DTC P2229 BAROMETRIC PRESSURE CIRCUIT HIGH, Diagnostic Trouble Code (DTC) Detecting Criteria.>
U0073	CAN Failure, Bus ‘OFF’ Detection	<Ref. to GD(H4SO)-198, DTC U0073 CAN FAILURE, BUS ‘OFF’ DETECTION, Diagnostic Trouble Code (DTC) Detecting Criteria.>
U0101	CAN (TCU) Data not Loaded	<Ref. to GD(H4SO)-199, DTC U0101 CAN (TCU) DATA NOT LOADED, Diagnostic Trouble Code (DTC) Detecting Criteria.>
U0122	CAN (VDC) Data not Loaded	<Ref. to GD(H4SO)-199, DTC U0122 CAN (VDC) DATA NOT LOADED, Diagnostic Trouble Code (DTC) Detecting Criteria.>
U0140	CAN (BCU) Data not Loaded	<Ref. to GD(H4SO)-199, DTC U0140 CAN (BCU) DATA NOT LOADED, Diagnostic Trouble Code (DTC) Detecting Criteria.>
U0402	CAN (TCU) Data Abnormal	<Ref. to GD(H4SO)-199, DTC U0402 CAN (TCU) DATA ABNORMAL, Diagnostic Trouble Code (DTC) Detecting Criteria.>
U0416	CAN (VDC) Data Abnormal	<Ref. to GD(H4SO)-199, DTC U0416 CAN (VDC) DATA ABNORMAL, Diagnostic Trouble Code (DTC) Detecting Criteria.>
U0422	CAN (BCU) Data Abnormal	<Ref. to GD(H4SO)-199, DTC U0422 CAN (BCU) DATA ABNORMAL, Diagnostic Trouble Code (DTC) Detecting Criteria.>

2. Diagnostic Trouble Code (DTC) Detecting Criteria

A: DTC P0026 INTAKE VALVE CONTROL SOLENOID CIRCUIT RANGE/PERFORMANCE (BANK 1)

1. OUTLINE OF DIAGNOSIS

Judge as NG with either Low NG or High NG.
A variable valve lift diagnosis oil pressure switch is installed for diagnosis. It is possible to determine whether the intake valve is in high mode (increase the amount of lift) or in low mode (suppressing the amount of lift) when the variable valve lift diagnosis oil pressure switch is turned ON or OFF.

- **Normal**

Oil switching solenoid valve duty	Intake valve	Variable valve lift diagnosis oil pressure switch
Large	High mode	OFF
Minimum	Low mode	ON

- **Low NG**

When the variable valve lift diagnosis oil pressure switch remains ON even though the intake valve tried to enter high mode (oil switching solenoid valve duty is large), this is judged as a Low NG.

- **High NG**

When the variable valve lift diagnosis oil pressure switch remains OFF even though the intake valve tried to enter low mode (oil switching solenoid valve duty is small), this is judged as a High NG.

2. COMPONENT DESCRIPTION

The variable valve lift system optimizes the intake valve lift by switching between the low lift cam and the high lift cam according to the engine speed. The amount of intake valve lift is varied by controlling the oil switching solenoid valve duty according to signals from the ECM.

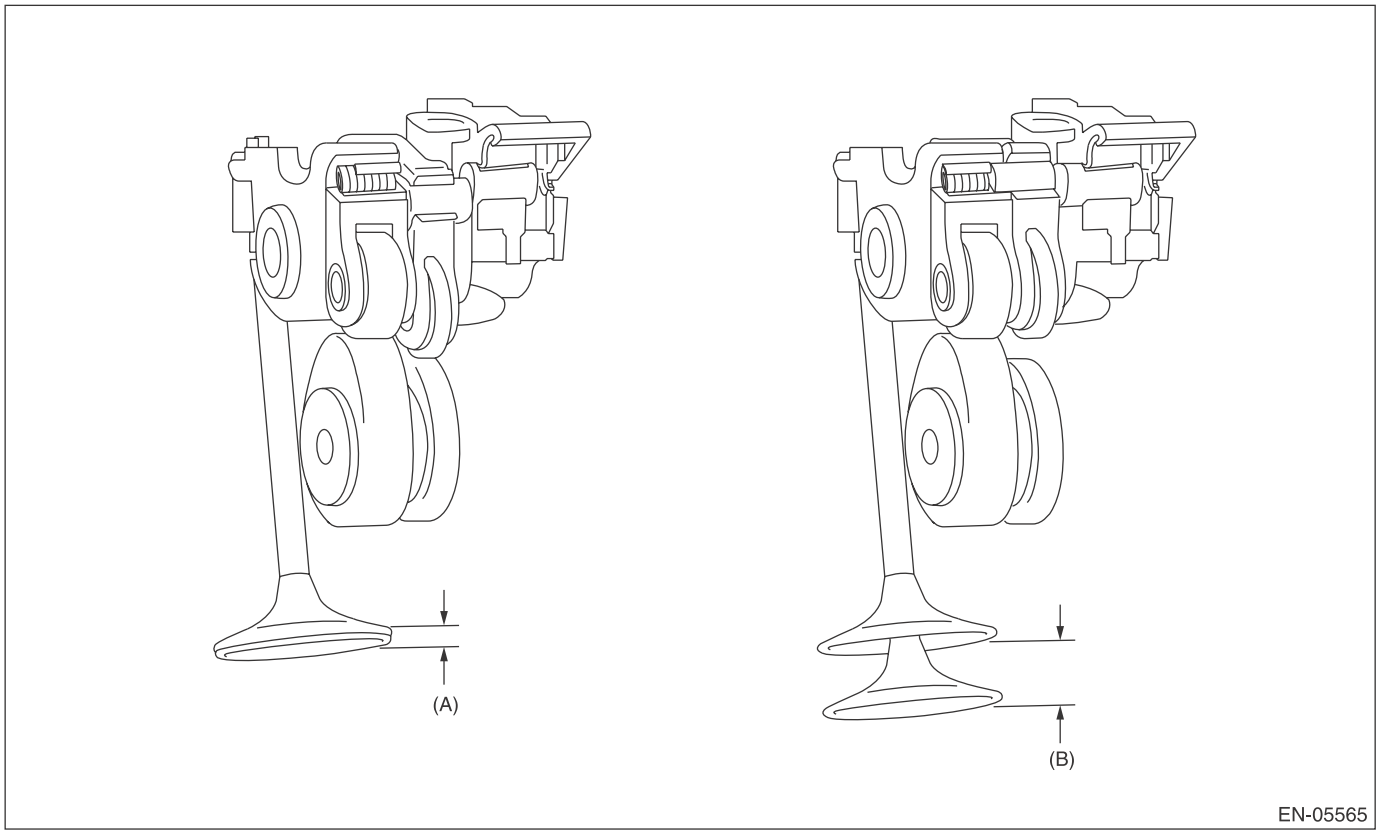

(A) Low lift (B) High lift

3. ENABLE CONDITION

Secondary Parameters	Enable Conditions
Battery voltage	≥ 10.9 V
After engine starting	≥ 6000 ms
Engine oil temperature	≥ 15 °C (59 °F)
Variable valve lift control	Operation

4. GENERAL DRIVING CYCLE

Perform the diagnosis continuously 6 seconds after engine start while variable valve lift is being controlled.

5. DIAGNOSTIC METHOD

- **Abnormality Judgment**

If the duration of time while the following conditions are met is longer than the time indicated, judge as NG.

Judgment Value

Malfunction Criteria	Threshold Value
Low	
Duty ratio	≥ 62 %
Variable valve lift diagnosis oil pressure switch	ON
High	
Duty ratio	< 33 %
Variable valve lift diagnosis oil pressure switch	OFF

Time Needed for Diagnosis:
Low side: 784 ms
High side: 3000 ms
Malfunction Indicator Light Illumination: Illuminates as soon as a malfunction occurs.

- **Normality Judgment**

Judge as OK and clear the NG if the continuous time while the following conditions are established is more than the predetermined time.

Judgment Value

Malfunction Criteria	Threshold Value
Low	
Duty ratio	≥ 62 %
Variable valve lift diagnosis oil pressure switch	OFF
High	
Duty ratio	< 33 %
Variable valve lift diagnosis oil pressure switch	ON

Time Needed for Diagnosis:
Low side: 208 ms
High side: 3000 ms

B: DTC P0028 INTAKE VALVE CONTROL SOLENOID CIRCUIT RANGE/PERFORMANCE (BANK 2)

1. OUTLINE OF DIAGNOSIS

NOTE:
For the detection standard, refer to DTC P0026. <Ref. to GD(H4SO)-8, DTC P0026 INTAKE VALVE CONTROL SOLENOID CIRCUIT RANGE/PERFORMANCE (BANK 1), Diagnostic Trouble Code (DTC) Detecting Criteria.>

C: DTC P0030 HO2S HEATER CONTROL CIRCUIT (BANK 1 SENSOR 1)

1. OUTLINE OF DIAGNOSIS

Detect functional errors of the front oxygen (A/F) sensor heater.
Judge as NG when it is determined that the front oxygen (A/F) sensor impedance is large when looking at engine status such as deceleration fuel cut.

2. COMPONENT DESCRIPTION

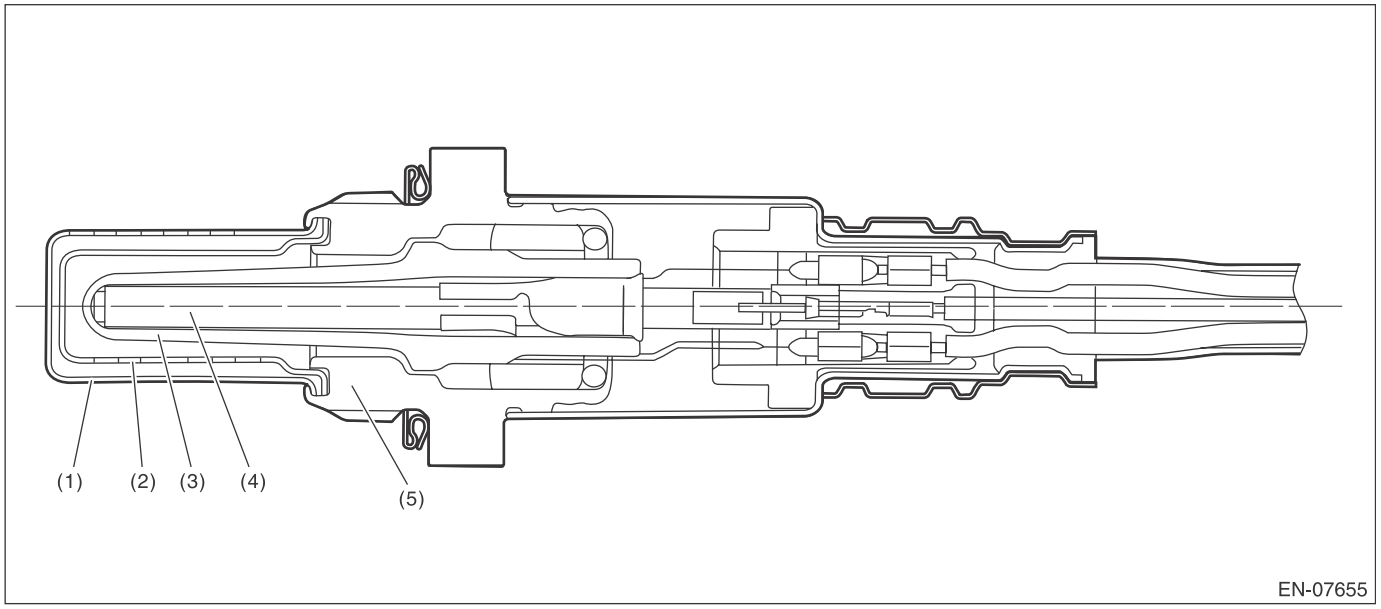

(1) Element cover (outer)
(2) Element cover (inner)
(3) Sensor element
(4) Ceramic heater
(5) Sensor housing

3. ENABLE CONDITION

Secondary Parameters	Enable Conditions
Condition established time	≥ 42000 ms
Battery voltage	≥ 10.9 V
Heater current	Permitted
Control duty ≥ 35 %	Experienced
After fuel cut	≥ 20000 ms

4. GENERAL DRIVING CYCLE

Perform the diagnosis continuously after 42000 ms or more have passed since the engine started.

5. DIAGNOSTIC METHOD

• Abnormality Judgment

If the duration of time while the following conditions are met is longer than the time indicated, judge as NG.

Judgment Value

Malfunction Criteria	Threshold Value
Front oxygen (A/F) sensor impedance	> 50 Ω

Time Needed for Diagnosis: 10000 ms
Malfunction Indicator Light Illumination: Illuminates when malfunction occurs in 2 continuous driving cycles.

• Normality Judgment

Judge as OK and clear the NG if the continuous time while the following conditions are established is more than the predetermined time.

Judgment Value

Malfunction Criteria	Threshold Value
Front oxygen (A/F) sensor impedance	≤ 50 Ω

Time Needed for Diagnosis: 10000 ms

D: DTC P0031 HO2S HEATER CONTROL CIRCUIT LOW (BANK 1 SENSOR 1)

1. OUTLINE OF DIAGNOSIS

Detect front oxygen (A/F) sensor heater open or short circuit.
The front oxygen (A/F) sensor heater performs duty control, and the output terminal voltage at ON is 0 V, and the output terminal voltage at OFF is the battery voltage.
Judge as NG when the terminal voltage remains Low.

2. COMPONENT DESCRIPTION

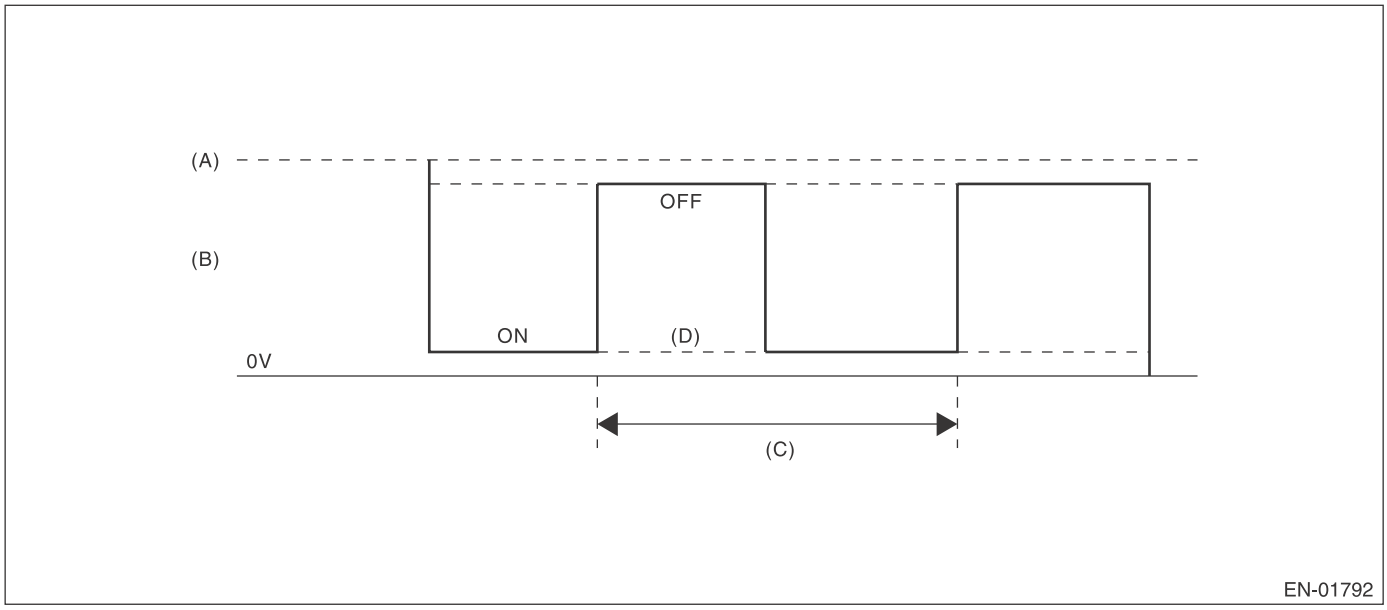

(A) Battery voltage
(B) Front oxygen (A/F) sensor heater output voltage
(C) 128 ms
(D) Low error

3. ENABLE CONDITION

Secondary Parameters	Enable Conditions
Battery voltage	≥ 10.9 V

4. GENERAL DRIVING CYCLE

Always perform the diagnosis continuously.

5. DIAGNOSTIC METHOD

- **Abnormality Judgment**

If the duration of time while the following conditions are met is longer than the time indicated, judge as NG.

Judgment Value

Malfunction Criteria	Threshold Value
Output voltage level Front oxygen (A/F) sensor heater control duty	Low < 87.5 %

Time Needed for Diagnosis: 4 ms × 250 time(s)
Malfunction Indicator Light Illumination: Illuminates as soon as a malfunction occurs.

- **Normality Judgment**

Judge as OK and clear the NG if the continuous time while the following conditions are established is more than the predetermined time.

Judgment Value

Malfunction Criteria	Threshold Value
Output voltage level	High

Time Needed for Diagnosis: Less than 1 second

E: DTC P0032 HO2S HEATER CONTROL CIRCUIT HIGH (BANK 1 SENSOR 1)

1. OUTLINE OF DIAGNOSIS

Detect front oxygen (A/F) sensor heater open or short circuit.
The front oxygen (A/F) sensor heater performs duty control, and the output terminal voltage at ON is 0 V, and the output terminal voltage at OFF is the battery voltage.
Judge as NG when the terminal voltage remains High.

2. COMPONENT DESCRIPTION

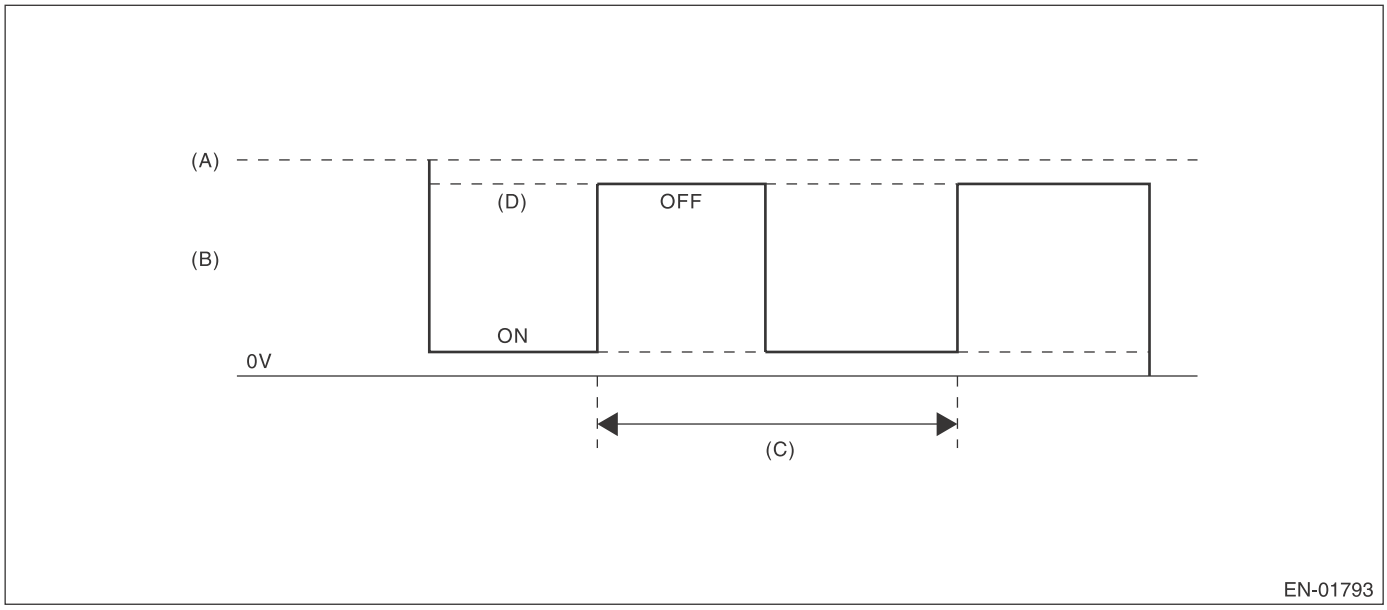

(A) Battery voltage
(B) Front oxygen (A/F) sensor heater output voltage
(C) 128 ms
(D) High error

3. ENABLE CONDITION

Secondary Parameters	Enable Conditions
Battery voltage	≥ 10.9 V

4. GENERAL DRIVING CYCLE

Always perform the diagnosis continuously.

5. DIAGNOSTIC METHOD

• Abnormality Judgment

If the duration of time while the following conditions are met is longer than the time indicated, judge as NG.

Judgment Value

Malfunction Criteria	Threshold Value
Output voltage level Front oxygen (A/F) sensor heater control duty	High ≥ 12.5 %

Time Needed for Diagnosis: 4 ms × 500 time(s)
Malfunction Indicator Light Illumination: Illuminates as soon as a malfunction occurs.

• Normality Judgment

Judge as OK and clear the NG if the continuous time while the following conditions are established is more than the predetermined time.

Judgment Value

Malfunction Criteria	Threshold Value
Output voltage level	Low

Time Needed for Diagnosis: Less than 1 second

F: DTC P0037 HO2S HEATER CONTROL CIRCUIT LOW (BANK 1 SENSOR 2)

1. OUTLINE OF DIAGNOSIS

Detect the rear oxygen sensor heater open or short circuit.
The rear oxygen sensor heater performs duty control, and the output terminal voltage at ON is 0 V, and the output terminal voltage at OFF is the battery voltage.
Judge as NG when the terminal voltage remains Low.

2. COMPONENT DESCRIPTION

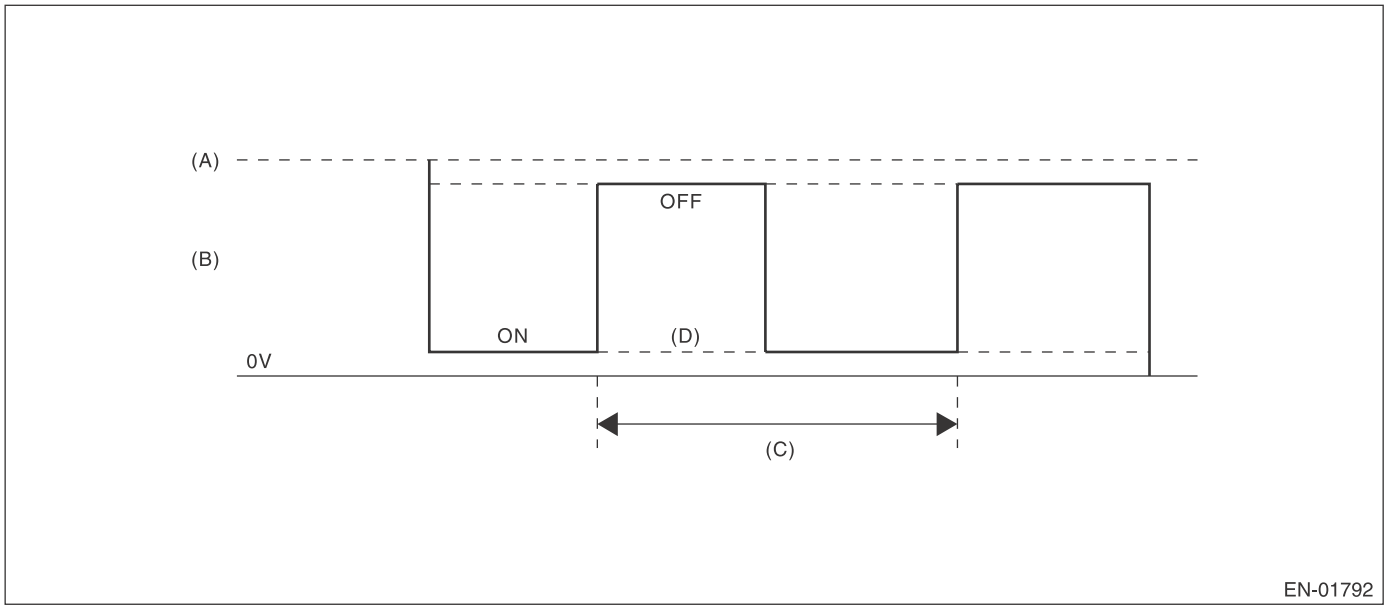

(A) Battery voltage
(B) Output voltage of the rear oxygen sensor heater
(C) 256 ms (cycle)
(D) Low error

3. ENABLE CONDITION

Secondary Parameters	Enable Conditions
Battery voltage	≥ 10.9 V
Elapsed time after starting the engine	≥ 1 second
Engine speed	< 8000 rpm

4. GENERAL DRIVING CYCLE

After starting the engine, perform the diagnosis continuously when engine is low speed.

5. DIAGNOSTIC METHOD

• Abnormality Judgment

If the duration of time while the following conditions are met is longer than the time indicated, judge as NG.

Judgment Value

Malfunction Criteria	Threshold Value
Output voltage level	Low
Rear oxygen sensor heater control duty	< 75 %

Time Needed for Diagnosis:8 ms × 1250 time(s)
Malfunction Indicator Light Illumination: Illuminates when malfunction occurs in 2 continuous driving cycles.

• Normality Judgment

Judge as OK and clear the NG if the continuous time while the following conditions are established is more than the predetermined time.

Judgment Value

Malfunction Criteria	Threshold Value
Output voltage level	High

Time Needed for Diagnosis: Less than 1 second

G: DTC P0038 HO2S HEATER CONTROL CIRCUIT HIGH (BANK 1 SENSOR 2)

1. OUTLINE OF DIAGNOSIS

Detect the rear oxygen sensor heater open or short circuit.
The rear oxygen sensor heater performs duty control, and the output terminal voltage at ON is 0 V, and the output terminal voltage at OFF is the battery voltage.
Judge as NG when the terminal voltage remains High.

2. COMPONENT DESCRIPTION

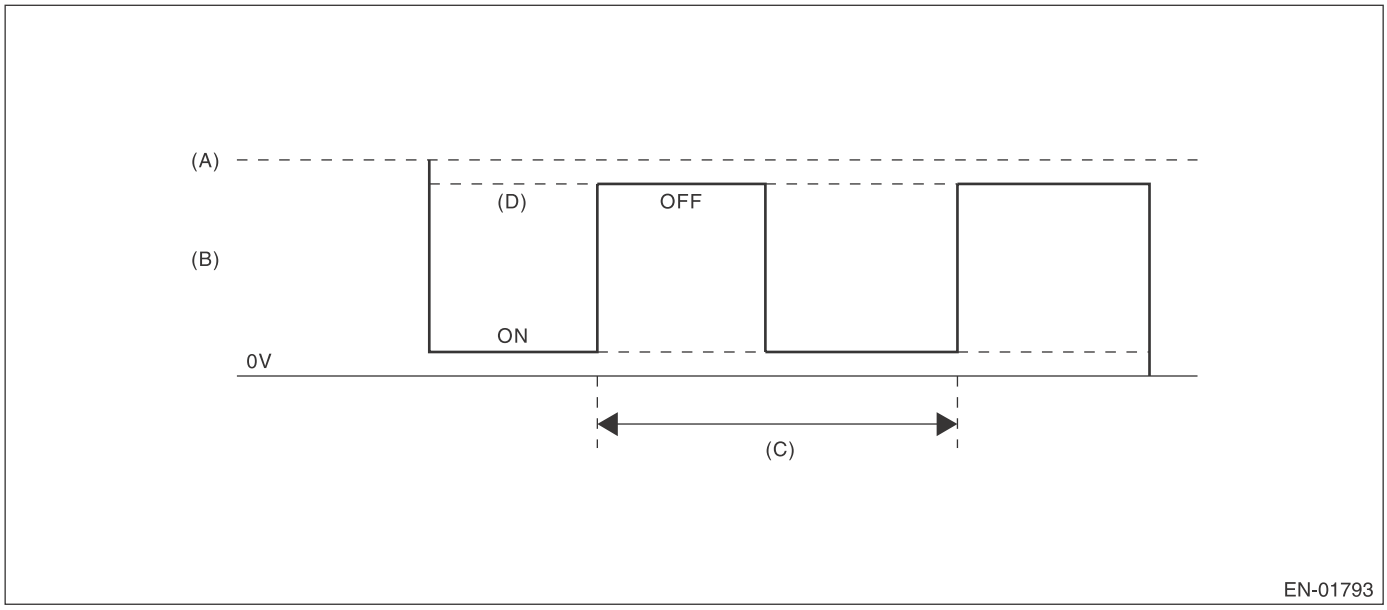

(A) Battery voltage
(B) Output voltage of the rear oxygen sensor heater
(C) 256 ms (cycle)
(D) High error

3. ENABLE CONDITION

Secondary Parameters	Enable Conditions
Battery voltage	≥ 10.9 V
Elapsed time after starting the engine	≥ 1 second
Engine speed	< 8000 rpm

4. GENERAL DRIVING CYCLE

After starting the engine, perform the diagnosis continuously when engine is low speed.

5. DIAGNOSTIC METHOD

• Abnormality Judgment

If the duration of time while the following conditions are met is longer than the time indicated, judge as NG.

Judgment Value

Malfunction Criteria	Threshold Value
Output voltage level	High
Rear oxygen sensor heater control duty	≥ 20 %

Time Needed for Diagnosis: 8 ms × 1250 time (s)
Malfunction Indicator Light Illumination: Illuminates when malfunction occurs in 2 continuous driving cycles.

• Normality Judgment

Judge as OK and clear the NG if the continuous time while the following conditions are established is more than the predetermined time.

Judgment Value

Malfunction Criteria	Threshold Value
Output voltage level	Low

Time Needed for Diagnosis: Less than 1 second

H: DTC P0068 MAP/MAF - THROTTLE POSITION CORRELATION

1. OUTLINE OF DIAGNOSIS

Detect problems in the intake manifold pressure sensor output properties.
Judge as NG when the intake air pressure AD value is Low whereas it seemed to be High from the viewpoint of engine condition, or when it is High whereas it seemed to be Low from the engine condition.

2. COMPONENT DESCRIPTION

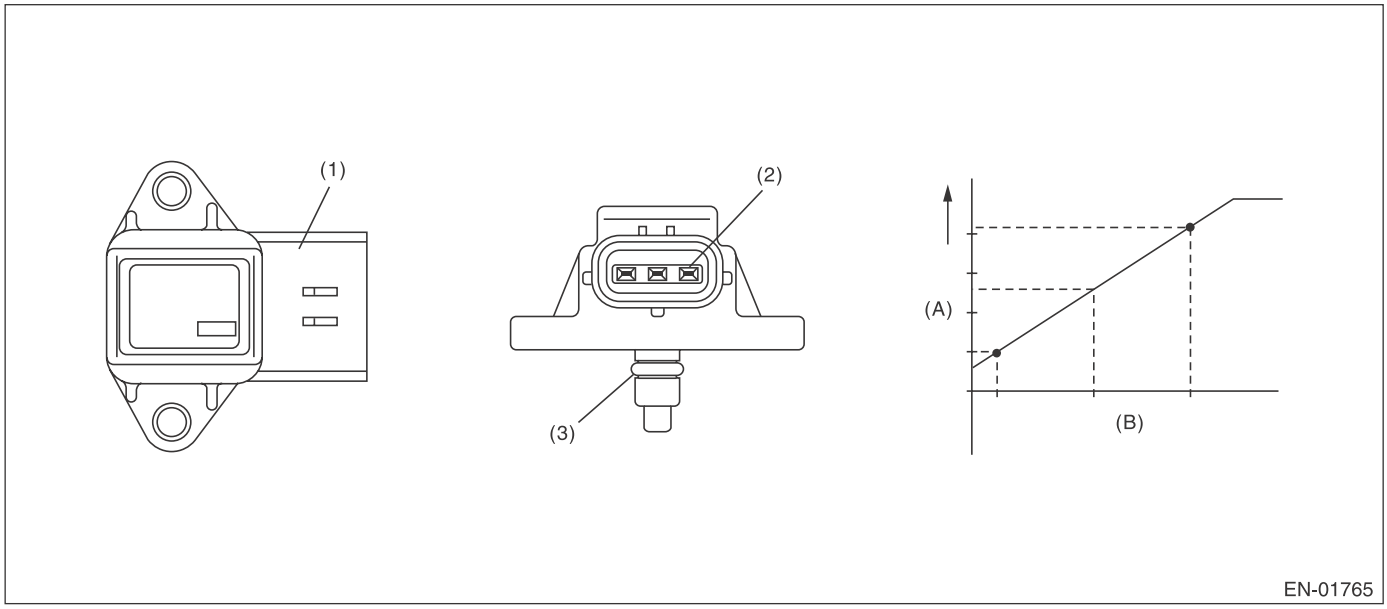

(A) Output voltage
(B) Absolute pressure
(1) Connector
(2) Terminals
(3) O-ring

3. ENABLE CONDITION

Secondary Parameters	Enable Conditions
Engine coolant temperature	≥ 60 °C (140 °F)

4. GENERAL DRIVING CYCLE

Perform the diagnosis continuously after idling.

5. DIAGNOSTIC METHOD

• Abnormality Judgment

Judge as NG when Low side or High side becomes NG.
If the duration of time while the following conditions are met is longer than the time indicated, judge as NG.

Judgment Value

Malfunction Criteria	Threshold Value
Low	
Engine speed	< 2500 rpm
Throttle position	≥ 12 °
Output voltage	< 1.46 V
Engine load	> 0.5 g/rev (0.02 oz/rev)
High	
Engine speed	600 rpm — 900 rpm
Throttle position	< 4.4 °
Output voltage	≥ 2.5 V
Engine load	< 0.4 g/rev (0.01 oz/rev)

Time Needed for Diagnosis:
Low side: 5000 ms
High side: 10000 ms
Malfunction Indicator Light Illumination: Illuminates when malfunction occurs in 2 continuous driving cycles.

• Normality Judgment

Judge as OK and clear the NG when both Low side and High side become OK.
If the duration of time while the following conditions are met is longer than the time indicated, judge as OK.

Judgment Value

Malfunction Criteria	Threshold Value
Low	
Engine speed	< 2500 rpm
Throttle position	≥ 12 °
Output voltage	≥ 1.46 V
Engine load	> 0.5 g/rev (0.02 oz/rev)
High	
Engine speed	600 rpm — 900 rpm
Throttle position	< 4.4 °
Output voltage	< 2.5 V
Engine load	< 0.4 g/rev (0.01 oz/rev)

Time Needed for Diagnosis:
Low side: Less than 1 s
High side: Less than 1 s

I: DTC P0076 INTAKE VALVE CONTROL SOLENOID CIRCUIT LOW (BANK 1)

1. OUTLINE OF DIAGNOSIS

Detect the open circuit of the oil switching solenoid valve.
Judge as NG when the current is small even though the output duty is large.

2. ENABLE CONDITION

Secondary Parameters	Enable Conditions
Battery voltage	≥ 10.9 V

3. GENERAL DRIVING CYCLE

Always perform the diagnosis continuously.

4. DIAGNOSTIC METHOD

- **Abnormality Judgment**

If the duration of time while the following conditions are met is longer than the time indicated, judge as NG.

Judgment Value

Malfunction Criteria	Threshold Value
Duty ratio	≥ 30 %
Control current	< 0.026 A

Time Needed for Diagnosis: 2000 ms
Malfunction Indicator Light Illumination: Illuminates as soon as a malfunction occurs.

- **Normality Judgment**

Judge as OK and clear the NG if the continuous time while the following conditions are established is more than the predetermined time.

Judgment Value

Malfunction Criteria	Threshold Value
|Oil switching solenoid valve target current value – Oil switching solenoid valve current value|	< 0.08 A
Target current	≥ 0.11 A

Time Needed for Diagnosis: 2000 ms

J: DTC P0077 INTAKE VALVE CONTROL SOLENOID CIRCUIT HIGH (BANK 1)

1. OUTLINE OF DIAGNOSIS

Detect short circuits of the oil switching solenoid valve.
Judge as a short NG when the current is large even though the output duty is small.

2. ENABLE CONDITION

Secondary Parameters	Enable Conditions
Battery voltage	≥ 10.9 V

3. GENERAL DRIVING CYCLE

Always perform the diagnosis continuously.

4. DIAGNOSTIC METHOD

- **Abnormality Judgment**

If the duration of time while the following conditions are met is longer than the time indicated, judge as NG.

Judgment Value

Malfunction Criteria	Threshold Value
Duty ratio	< 7 %
Control current	≥ 0.465 A

Time Needed for Diagnosis: 2000 ms
Malfunction Indicator Light Illumination: Illuminates as soon as a malfunction occurs.

- **Normality Judgment**

Judge as OK and clear the NG if the continuous time while the following conditions are established is more than the predetermined time.

Judgment Value

Malfunction Criteria	Threshold Value
|Oil switching solenoid valve target current value – Oil switching solenoid valve current value|	< 0.08 A

Time Needed for Diagnosis: 2000 ms

K: DTC P0082 INTAKE VALVE CONTROL SOLENOID CIRCUIT LOW (BANK 2)

1. OUTLINE OF DIAGNOSIS

NOTE:
For the detection standard, refer to DTC P0076. <Ref. to GD(H4SO)-23, DTC P0076 INTAKE VALVE CONTROL SOLENOID CIRCUIT LOW (BANK 1), Diagnostic Trouble Code (DTC) Detecting Criteria.>

L: DTC P0083 INTAKE VALVE CONTROL SOLENOID CIRCUIT HIGH (BANK 2)

1. OUTLINE OF DIAGNOSIS

NOTE:
For the detection standard, refer to DTC P0077. <Ref. to GD(H4SO)-24, DTC P0077 INTAKE VALVE CONTROL SOLENOID CIRCUIT HIGH (BANK 1), Diagnostic Trouble Code (DTC) Detecting Criteria.>

M: DTC P0101 MASS OR VOLUME AIR FLOW CIRCUIT RANGE/PERFORMANCE

1. OUTLINE OF DIAGNOSIS

Detect the malfunction of air flow sensor output properties.
Judge as a low side NG when the air flow voltage indicates a small value regardless of running in a state where the air flow voltage increases. Judge as a high side NG when the air flow voltage indicates a large value regardless of running in a state where the air flow voltage decreases. Judge air flow sensor property NG when the Low side or High side becomes NG.

2. COMPONENT DESCRIPTION

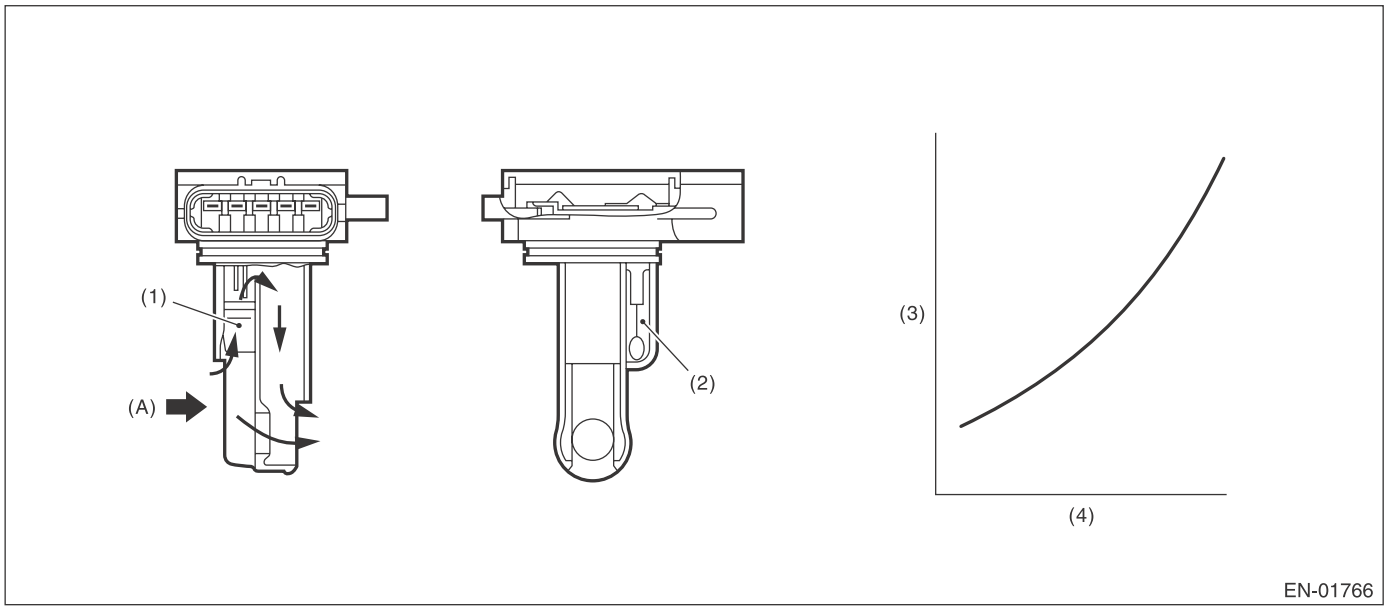

(A) Air

(1) Air flow sensor
(2) Intake air temperature sensor
(3) Voltage (V)
(4) Amount of intake air (kg (lb)/s)

3. ENABLE CONDITION

Secondary Parameters	Enable Conditions
Engine coolant temperature	≥ 60 °C (140 °F)

4. GENERAL DRIVING CYCLE

Perform the diagnosis continuously after idling.

5. DIAGNOSTIC METHOD

• Abnormality Judgment

Judge as NG when Low side or High side becomes NG.
If the duration of time while the following conditions are met is longer than the time indicated, judge as NG.

Judgment Value

Malfunction Criteria	Threshold Value
Low	
Output voltage	< 1.49 V
Engine speed	≥ 2500 rpm
Throttle opening angle	≥ 12 °
Intake manifold pressure	≥ 66.7 kPa (500 mmHg, 19.7 inHg)
High (1)	
Output voltage	≥ 2.66 V
Engine speed	600 rpm — 900 rpm
Throttle opening angle	< 4.4 °
Intake manifold pressure	≥ 40 kPa (300 mmHg, 11.8 inHg)
High (2)	
Output voltage	≥ 1.55 V
Engine speed	600 rpm — 900 rpm
Throttle opening angle	< 4.4 °
Intake manifold pressure	≥ 40 kPa (300 mmHg, 11.8 inHg)
Fuel system diagnosis	Rich side malfunction

Time Needed for Diagnosis:
Low: 5000 ms
High: 10000 ms
Malfunction Indicator Light Illumination: Illuminates when malfunction occurs in 2 continuous driving cycles.

• Normality Judgment

Judge as OK and clear the NG when both Low side and High side become OK.
Judge as OK and clear the NG if the continuous time while the following conditions are established is more than the predetermined time.

Judgment Value

Malfunction Criteria	Threshold Value
Low	
Output voltage	≥ 1.49 V
Engine speed	≥ 2500 rpm
Throttle opening angle	≥ 12 °
Intake manifold pressure	≥ 66.7 kPa (500 mmHg, 19.7 inHg)
High	
Output voltage	< 2.66 V
Engine speed	600 rpm — 900 rpm
Throttle opening angle	< 4.4 °
Intake manifold pressure	< 40 kPa (300 mmHg, 11.8 inHg)
Fuel system diagnosis	Rich side normal

Time Needed for Diagnosis:
Low: Less than 1 s
High: Less than 1 s

N: DTC P0102 MASS OR VOLUME AIR FLOW CIRCUIT LOW INPUT

1. OUTLINE OF DIAGNOSIS

Detect open or short circuits of the air flow sensor.
Judge as NG if out of specification.

2. COMPONENT DESCRIPTION

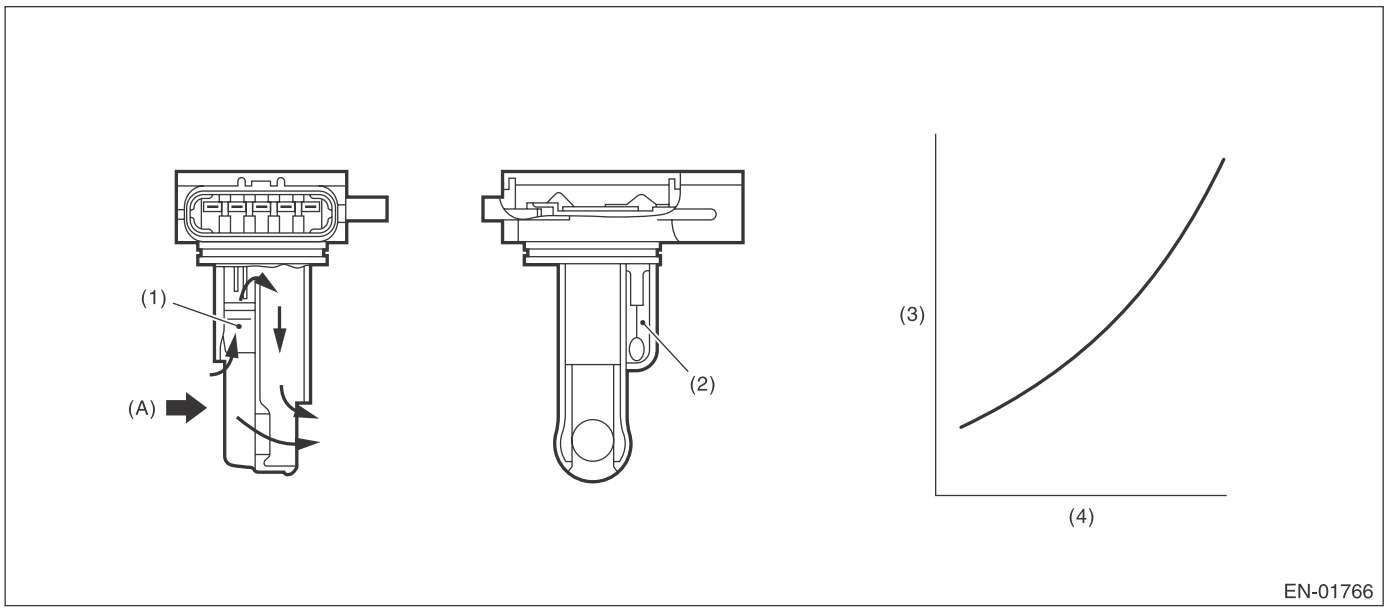

(A) Air

(1) Air flow sensor
(2) Intake air temperature sensor
(3) Voltage (V)
(4) Amount of intake air (kg (lb)/s)

3. ENABLE CONDITION

Secondary Parameters	Enable Conditions
None	

4. GENERAL DRIVING CYCLE

Always perform the diagnosis continuously.

5. DIAGNOSTIC METHOD

• Abnormality Judgment

If the duration of time while the following conditions are met is longer than the time indicated, judge as NG.

Judgment Value

Malfunction Criteria	Threshold Value
Output voltage	≤ 0.22 V

Time Needed for Diagnosis: 500 ms
Malfunction Indicator Light Illumination: Illuminates as soon as a malfunction occurs.

• Normality Judgment

Judge as OK and clear the NG if the continuous time while the following conditions are established is more than the predetermined time.

Judgment Value

Malfunction Criteria	Threshold Value
Output voltage	> 0.22 V

Time Needed for Diagnosis: Less than 1 second

O: DTC P0103 MASS OR VOLUME AIR FLOW CIRCUIT HIGH INPUT

1. OUTLINE OF DIAGNOSIS

Detect open or short circuits of the air flow sensor.
Judge as NG if out of specification.

2. COMPONENT DESCRIPTION

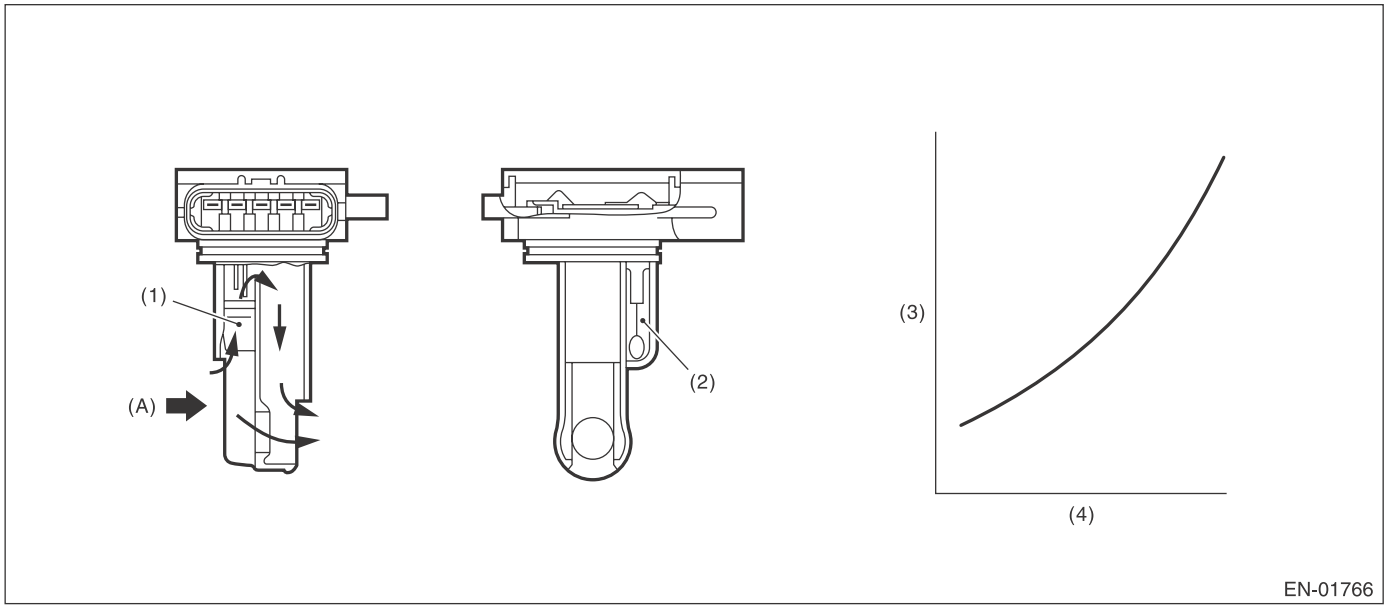

(A) Air

(1) Air flow sensor
(2) Intake air temperature sensor
(3) Voltage (V)
(4) Amount of intake air (kg (lb)/s)

3. ENABLE CONDITION

Secondary Parameters	Enable Conditions
None	

4. GENERAL DRIVING CYCLE

Always perform the diagnosis continuously.

5. DIAGNOSTIC METHOD

• Abnormality Judgment

If the duration of time while the following conditions are met is longer than the time indicated, judge as NG.

Judgment Value

Malfunction Criteria	Threshold Value
Output voltage	≥ 4.19 V

Time Needed for Diagnosis: 500 ms
Malfunction Indicator Light Illumination: Illuminates as soon as a malfunction occurs.

• Normality Judgment

Judge as OK and clear the NG if the continuous time while the following conditions are established is more than the predetermined time.

Judgment Value

Malfunction Criteria	Threshold Value
Output voltage	< 4.19 V

Time Needed for Diagnosis: Less than 1 second

P: DTC P0107 MANIFOLD ABSOLUTE PRESSURE/BAROMETRIC PRESSURE CIRCUIT LOW INPUT

1. OUTLINE OF DIAGNOSIS

Detect the open or short circuit of intake manifold pressure sensor.
Judge as NG if out of specification.

2. COMPONENT DESCRIPTION

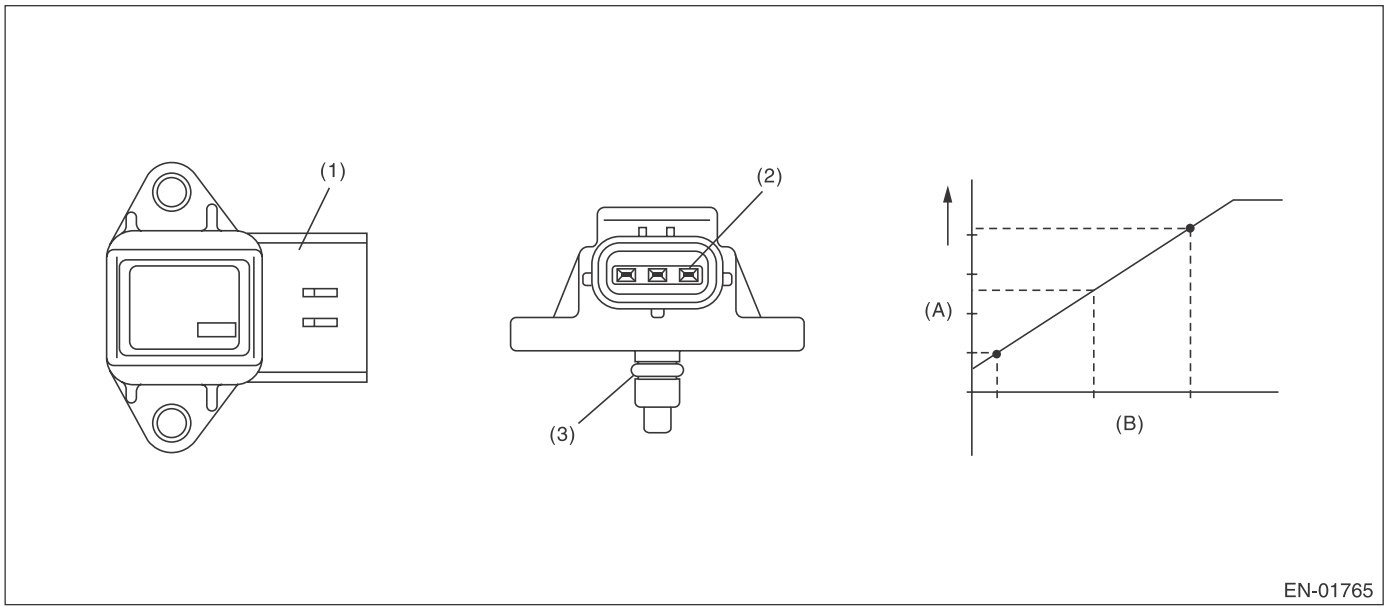

(A) Output voltage
(B) Absolute pressure
(1) Connector
(2) Terminals
(3) O-ring

3. ENABLE CONDITION

Secondary Parameters	Enable Conditions
None	

4. GENERAL DRIVING CYCLE

Always perform the diagnosis continuously.

5. DIAGNOSTIC METHOD

• Abnormality Judgment

If the duration of time while the following conditions are met is longer than the time indicated, judge as NG.

Judgment Value

Malfunction Criteria	Threshold Value
Output voltage	≤ 0.573 V

Time Needed for Diagnosis: 500 ms
Malfunction Indicator Light Illumination: Illuminates as soon as a malfunction occurs.

• Normality Judgment

Judge as OK and clear the NG if the continuous time while the following conditions are established is more than the predetermined time.

Judgment Value

Malfunction Criteria	Threshold Value
Output voltage	> 0.573 V

Time Needed for Diagnosis: Less than 1 second

Q: DTC P0108 MANIFOLD ABSOLUTE PRESSURE/BAROMETRIC PRESSURE CIRCUIT HIGH INPUT

1. OUTLINE OF DIAGNOSIS

Detect the open or short circuit of intake manifold pressure sensor.
Judge as NG if out of specification.

2. COMPONENT DESCRIPTION

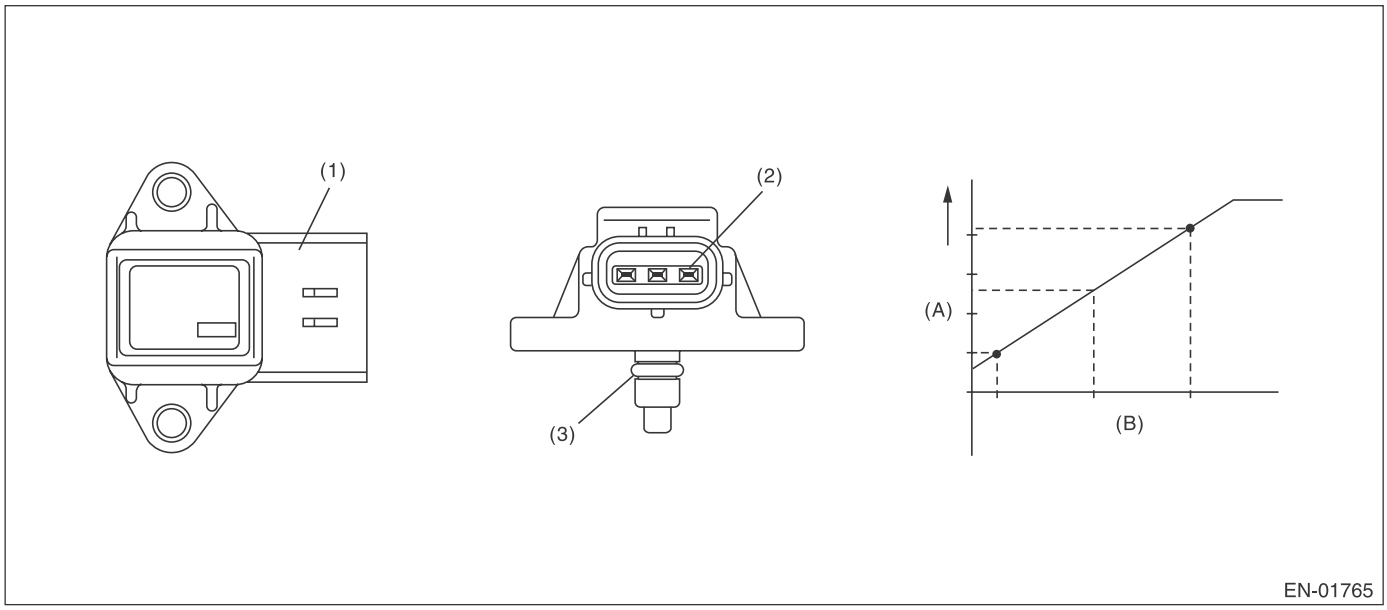

(A) Output voltage
(B) Absolute pressure
(1) Connector
(2) Terminals
(3) O-ring

3. ENABLE CONDITION

Secondary Parameters	Enable Conditions
None	

4. GENERAL DRIVING CYCLE

Always perform the diagnosis continuously.

5. DIAGNOSTIC METHOD

• Abnormality Judgment

If the duration of time while the following conditions are met is longer than the time indicated, judge as NG.

Judgment Value

Malfunction Criteria	Threshold Value
Output voltage	≥ 4.388 V

Time Needed for Diagnosis: 500 ms
Malfunction Indicator Light Illumination: Illuminates as soon as a malfunction occurs.

• Normality Judgment

Judge as OK and clear the NG if the continuous time while the following conditions are established is more than the predetermined time.

Judgment Value

Malfunction Criteria	Threshold Value
Output voltage	< 4.388 V

Time Needed for Diagnosis: Less than 1 second

R: DTC P0111 INTAKE AIR TEMPERATURE SENSOR 1 CIRCUIT RANGE/PERFORMANCE

1. OUTLINE OF DIAGNOSIS

Detect the malfunction of intake air temperature sensor output property.
Judge as NG when the intake air temperature is not varied whereas it seemed to be varied from the viewpoint of engine condition.

2. COMPONENT DESCRIPTION

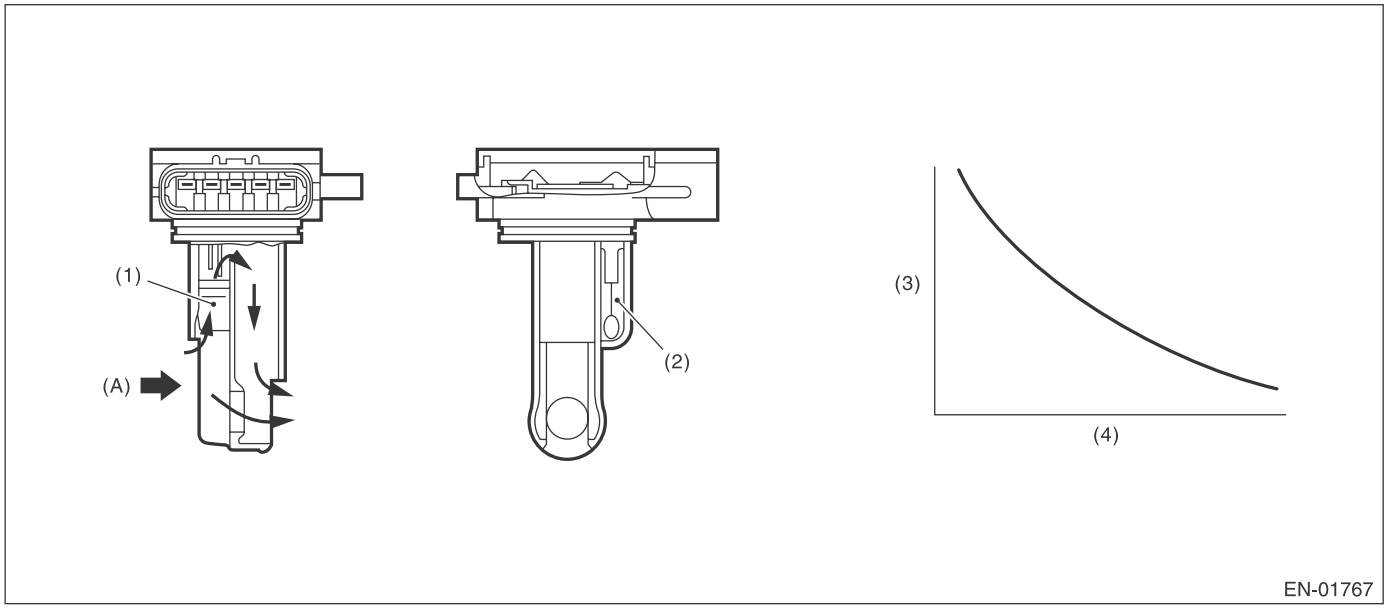

(A) Air

(1) Air flow sensor
(2) Intake air temperature sensor
(3) Resistance value (Ω)
(4) Intake air temperature °C (°F)

3. ENABLE CONDITION

Secondary Parameters	Enable Conditions
Engine coolant temperature at engine starting	< 35 °C (95 °F)
Battery voltage	≥ 10.9 V
Continuous time when the vehicle speed is less than 140 km/h (87 MPH)	≥ 600 s
Engine coolant temperature	≥ 75 °C (167 °F)
Intake air amount sum value	≥ Value of Map 1
Number of experiences under conditions below	≥ 3 time(s)
• Continuous time when vehicle speed is less than 4 km/h (2.5 MPH)	≥ Value from Map 2
• Continuous time when vehicle speed is 40 km/h (24.9 MPH) or more	≥ 15 s
and	
Establishing time of 1, 2	≥ 15 s
1. Intake air amount	≥ 10 g/s (0.35 oz/s)
2. Vehicle speed	≥ 4 km/h (2.5 MPH)

Map 1

Engine coolant temperature °C (°F)	–20 (–4)	–10 (14)	0 (32)	10 (50)	20 (68)
Intake air amount sum value (g (oz)/s)	50000 (1763.5)	7400 (261)	6600 (232.78)	5800 (204.57)	4500 (158.72)

Map 2

Engine coolant temperature °C (°F)	–30 (–22)	0 (32)	10 (50)	20 (68)
Continuous time (s) when vehicle speed is less than 4 km/h (2.5 MPH)	250	40	32	24

4. GENERAL DRIVING CYCLE

Perform the diagnosis when the vehicle speed condition is met after warming up from a cold condition.

5. DIAGNOSTIC METHOD

- **Abnormality Judgment**

Judge as NG when the following conditions are established.

Judgment Value

Malfunction Criteria	Threshold Value
Output voltage difference between Max. and Min.	< 0.02 V(Equivalent to approximately 0.5°C (0.9°F) near 25°C)

Time Needed for Diagnosis: Less than 1 second
Malfunction Indicator Light Illumination: Illuminates when malfunction occurs in 2 continuous driving cycles.

- **Normality Judgment**

Judge as OK and clear the NG if the following conditions are established.

Judgment Value

Malfunction Criteria	Threshold Value
Output voltage difference between Max. and Min.	≥ 0.02 V

Time Needed for Diagnosis: Less than 1 second

S: DTC P0112 INTAKE AIR TEMPERATURE SENSOR 1 CIRCUIT LOW

1. OUTLINE OF DIAGNOSIS

Detect open or short circuit of the intake air temperature sensor.
Judge as NG if out of specification.

2. COMPONENT DESCRIPTION

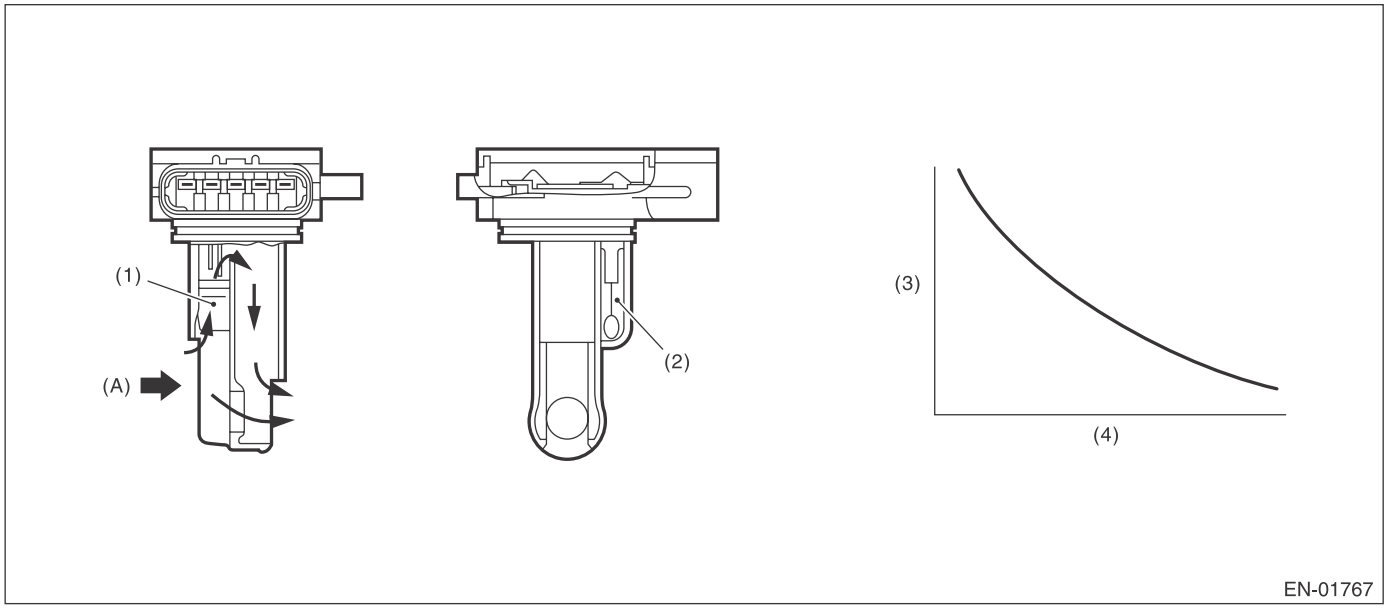

(A) Air

(1) Air flow sensor
(2) Intake air temperature sensor
(3) Resistance value (Ω)
(4) Intake air temperature °C (°F)

3. ENABLE CONDITION

Secondary Parameters	Enable Conditions
None	

4. GENERAL DRIVING CYCLE

Always perform the diagnosis continuously.

5. DIAGNOSTIC METHOD

• Abnormality Judgment

If the duration of time while the following conditions are met is longer than the time indicated, judge as NG.

Judgment Value

Malfunction Criteria	Threshold Value
Output voltage	< 0.231 V

Time Needed for Diagnosis: 500 ms
Malfunction Indicator Light Illumination: Illuminates as soon as a malfunction occurs.

• Normality Judgment

Judge as OK and clear the NG if the continuous time while the following conditions are established is more than the predetermined time.

Judgment Value

Malfunction Criteria	Threshold Value
Output voltage	≥ 0.231 V

Time Needed for Diagnosis: Less than 1 second

T: DTC P0113 INTAKE AIR TEMPERATURE SENSOR 1 CIRCUIT HIGH

1. OUTLINE OF DIAGNOSIS

Detect open or short circuit of the intake air temperature sensor.
Judge as NG if out of specification.

2. COMPONENT DESCRIPTION

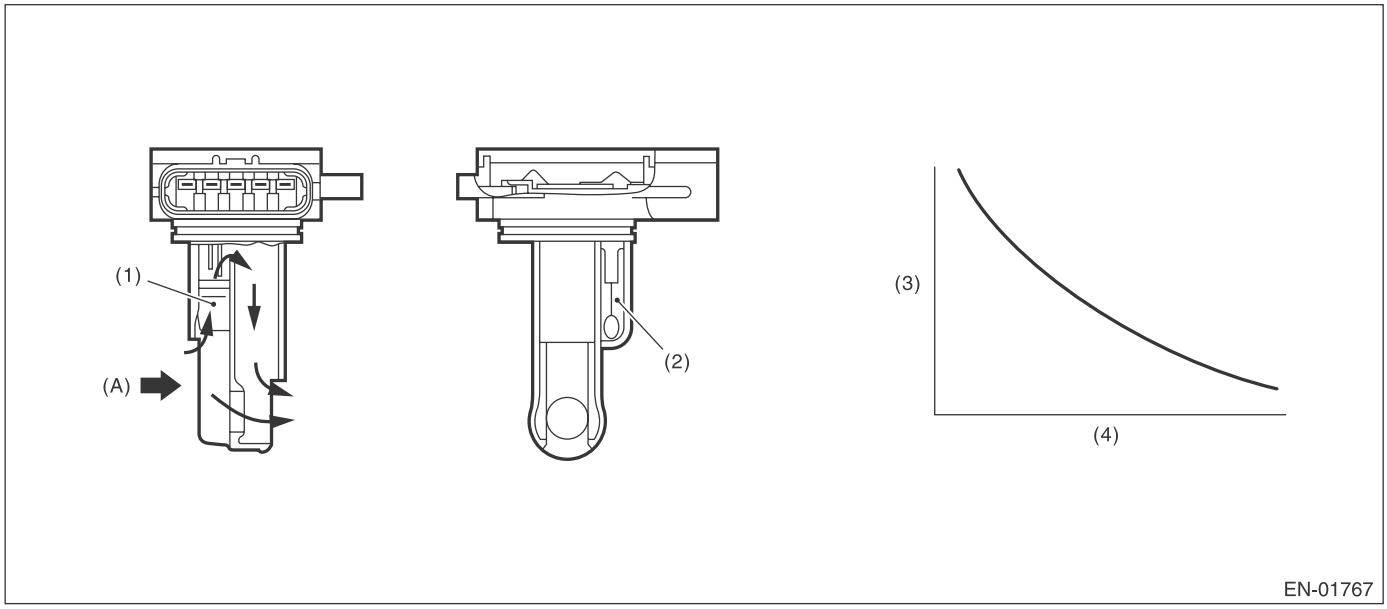

(A) Air

(1) Air flow sensor
(2) Intake air temperature sensor
(3) Resistance value (Ω)
(4) Intake air temperature °C (°F)

3. ENABLE CONDITION

Secondary Parameters	Enable Conditions
None	

4. GENERAL DRIVING CYCLE

Always perform the diagnosis continuously.

5. DIAGNOSTIC METHOD

• Abnormality Judgment

If the duration of time while the following conditions are met is longer than the time indicated, judge as NG.

Judgment Value

Malfunction Criteria	Threshold Value
Output voltage	≥ 4.716 V

Time Needed for Diagnosis: 500 ms
Malfunction Indicator Light Illumination: Illuminates as soon as a malfunction occurs.

• Normality Judgment

Judge as OK and clear the NG if the continuous time while the following conditions are established is more than the predetermined time.

Judgment Value

Malfunction Criteria	Threshold Value
Output voltage	< 4.716 V

Time Needed for Diagnosis: Less than 1 second

U: DTC P0117 ENGINE COOLANT TEMPERATURE CIRCUIT LOW

1. OUTLINE OF DIAGNOSIS

Detect the open or short circuit of the engine coolant temperature sensor.
Judge as NG if out of specification.

2. COMPONENT DESCRIPTION

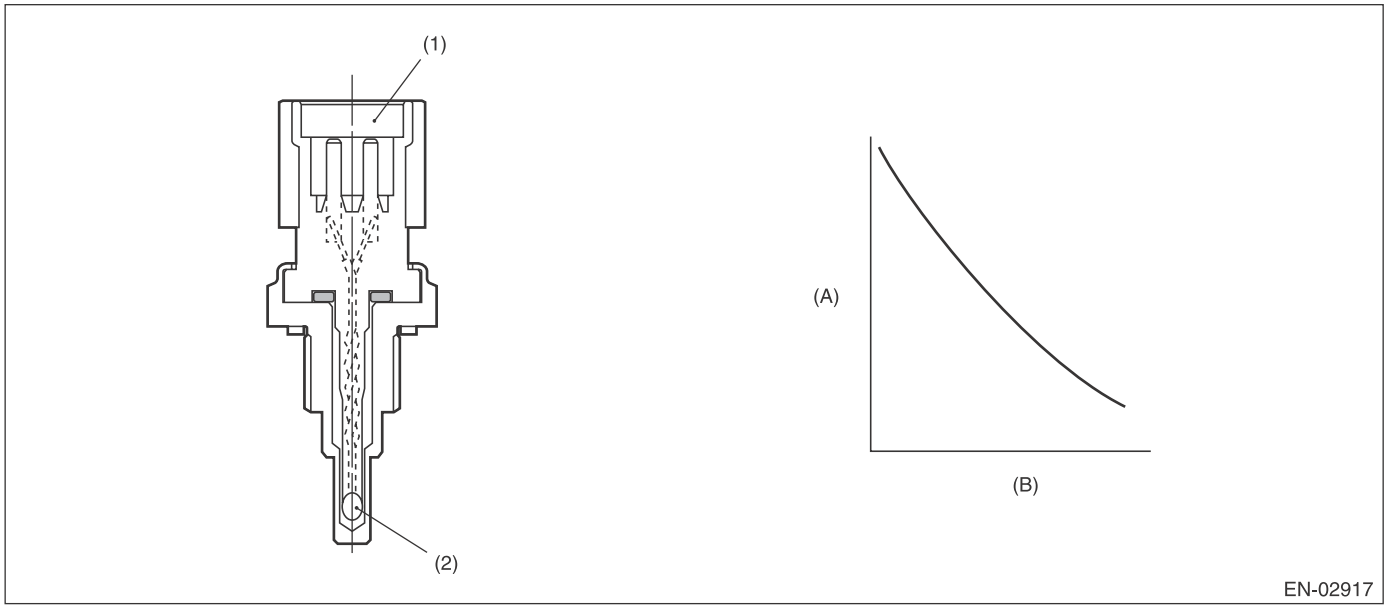

(A) Resistance value (kΩ)
(B) Temperature °C (°F)
(1) Connector
(2) Thermistor element

3. ENABLE CONDITION

Secondary Parameters	Enable Conditions
None	

4. GENERAL DRIVING CYCLE

Always perform the diagnosis continuously.

5. DIAGNOSTIC METHOD

- **Abnormality Judgment**

If the duration of time while the following conditions are met is longer than the time indicated, judge as NG.

Judgment Value

Malfunction Criteria	Threshold Value
Output voltage	< 0.275 V

Time Needed for Diagnosis: 500 ms
Malfunction Indicator Light Illumination: Illuminates as soon as a malfunction occurs.

- **Normality Judgment**

Judge as OK and clear the NG if the continuous time while the following conditions are established is more than the predetermined time.

Judgment Value

Malfunction Criteria	Threshold Value
Output voltage	≥ 0.275 V

Time Needed for Diagnosis: Less than 1 second

V: DTC P0118 ENGINE COOLANT TEMPERATURE CIRCUIT HIGH

1. OUTLINE OF DIAGNOSIS

Detect the open or short circuit of the engine coolant temperature sensor.
Judge as NG if out of specification.

2. COMPONENT DESCRIPTION

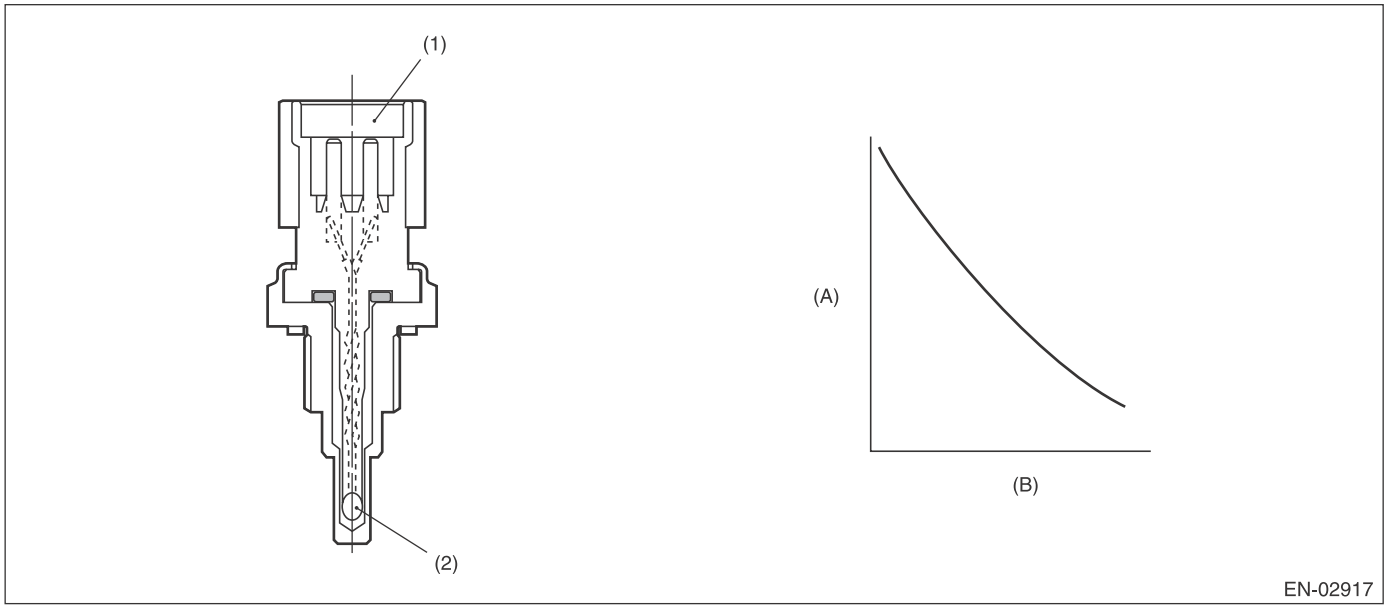

(A) Resistance value (kΩ)
(B) Temperature °C (°F)
(1) Connector
(2) Thermistor element

3. ENABLE CONDITION

Secondary Parameters	Enable Conditions
None	

4. GENERAL DRIVING CYCLE

Always perform the diagnosis continuously.

5. DIAGNOSTIC METHOD

- **Abnormality Judgment**

If the duration of time while the following conditions are met is longer than the time indicated, judge as NG.

Judgment Value

Malfunction Criteria	Threshold Value
Output voltage	≥ 4.716 V

Time Needed for Diagnosis: 500 ms
Malfunction Indicator Light Illumination: Illuminates as soon as a malfunction occurs.

- **Normality Judgment**

Judge as OK and clear the NG if the continuous time while the following conditions are established is more than the predetermined time.

Judgment Value

Malfunction Criteria	Threshold Value
Output voltage	< 4.716 V

Time Needed for Diagnosis: Less than 1 second

W: DTC P0122 THROTTLE/PEDAL POSITION SENSOR/SWITCH "A" CIRCUIT LOW

1. OUTLINE OF DIAGNOSIS

Detect the open or short circuit of throttle position sensor 1.
Judge as NG if out of specification.

2. COMPONENT DESCRIPTION

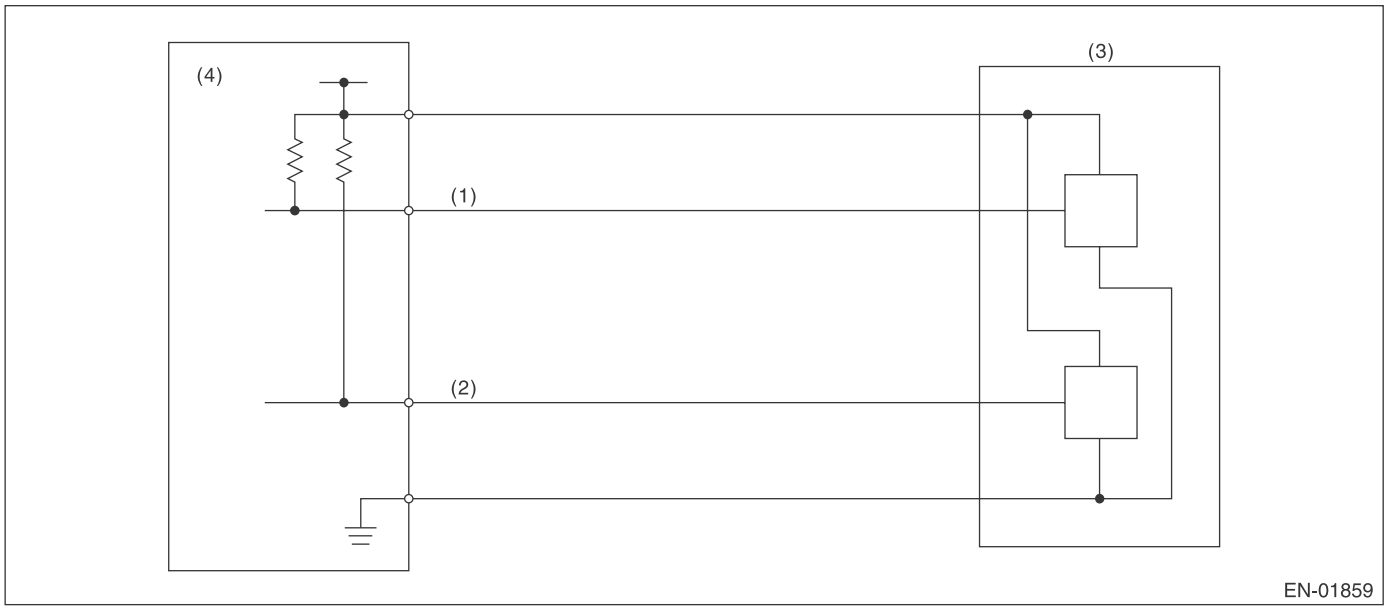

(1) Throttle position sensor 1 signal
(2) Throttle position sensor 2 signal
(3) Throttle position sensor
(4) Engine control module (ECM)

3. ENABLE CONDITION

Secondary Parameters	Enable Conditions
Ignition switch	ON
Battery voltage	≥ 6 V

4. GENERAL DRIVING CYCLE

Always perform the diagnosis continuously.

5. DIAGNOSTIC METHOD

• Abnormality Judgment

If the duration of time while the following conditions are met is longer than the time indicated, judge as NG.

Judgment Value

Malfunction Criteria	Threshold Value
Sensor 1 input voltage	≤ 0.217 V

Time Needed for Diagnosis: 24 ms
Malfunction Indicator Light Illumination: Illuminates as soon as a malfunction occurs.

• Normality Judgment

Judge as OK and clear the NG if the continuous time while the following conditions are established is more than the predetermined time.

Judgment Value

Malfunction Criteria	Threshold Value
Sensor 1 input voltage	> 0.217 V

Time Needed for Diagnosis: 24 ms

X: DTC P0123 THROTTLE/PEDAL POSITION SENSOR/SWITCH "A" CIRCUIT HIGH

1. OUTLINE OF DIAGNOSIS

Detect the open or short circuit of throttle position sensor 1.
Judge as NG if out of specification.

2. COMPONENT DESCRIPTION

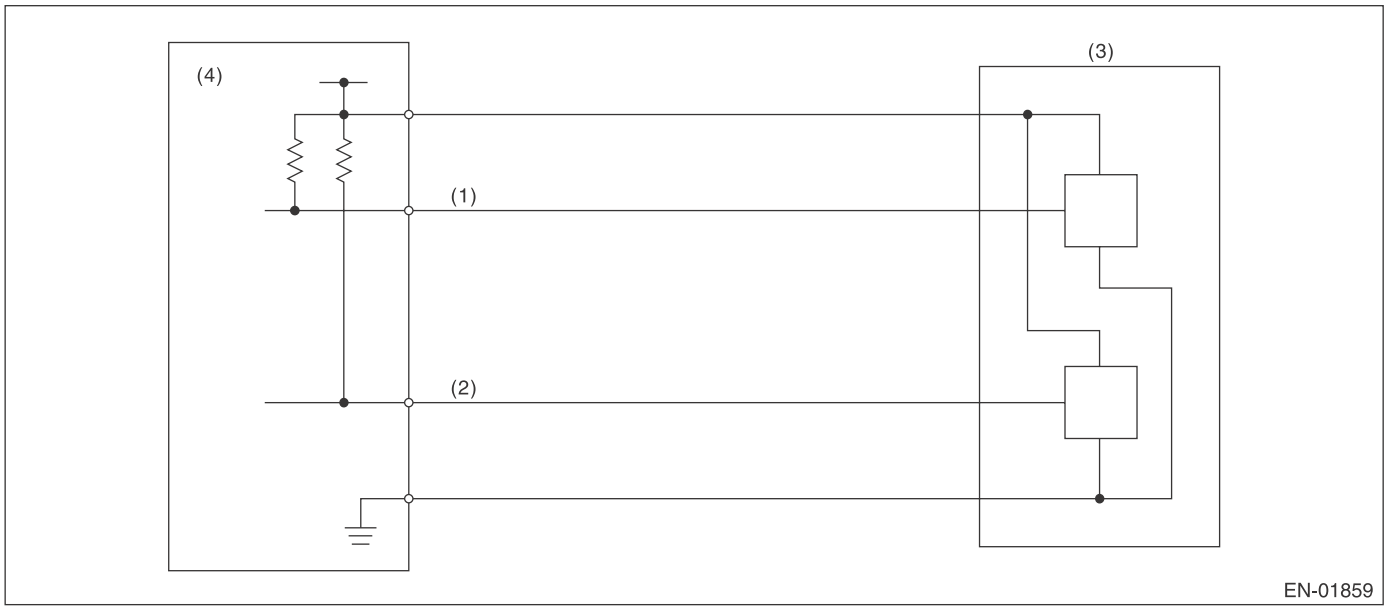

(1) Throttle position sensor 1 signal
(2) Throttle position sensor 2 signal
(3) Throttle position sensor
(4) Engine control module (ECM)

3. ENABLE CONDITION

Secondary Parameters	Enable Conditions
Ignition switch	ON
Battery voltage	≥ 6 V

4. GENERAL DRIVING CYCLE

Always perform the diagnosis continuously.

5. DIAGNOSTIC METHOD

• Abnormality Judgment

If the duration of time while the following conditions are met is longer than the time indicated, judge as NG.

Judgment Value

Malfunction Criteria	Threshold Value
Sensor 1 input voltage	≥ 4.858 V

Time Needed for Diagnosis: 24 ms
Malfunction Indicator Light Illumination: Illuminates as soon as a malfunction occurs.

• Normality Judgment

Judge as OK and clear the NG if the continuous time while the following conditions are established is more than the predetermined time.

Judgment Value

Malfunction Criteria	Threshold Value
Sensor 1 input voltage	< 4.858 V

Time Needed for Diagnosis: 24 ms

Y: DTC P0125 INSUFFICIENT COOLANT TEMPERATURE FOR CLOSED LOOP FUEL CONTROL

1. OUTLINE OF DIAGNOSIS

Detect the malfunction of engine coolant temperature output property.
Judge as NG when the engine coolant temperature does not rise in driving conditions where it should.

2. COMPONENT DESCRIPTION

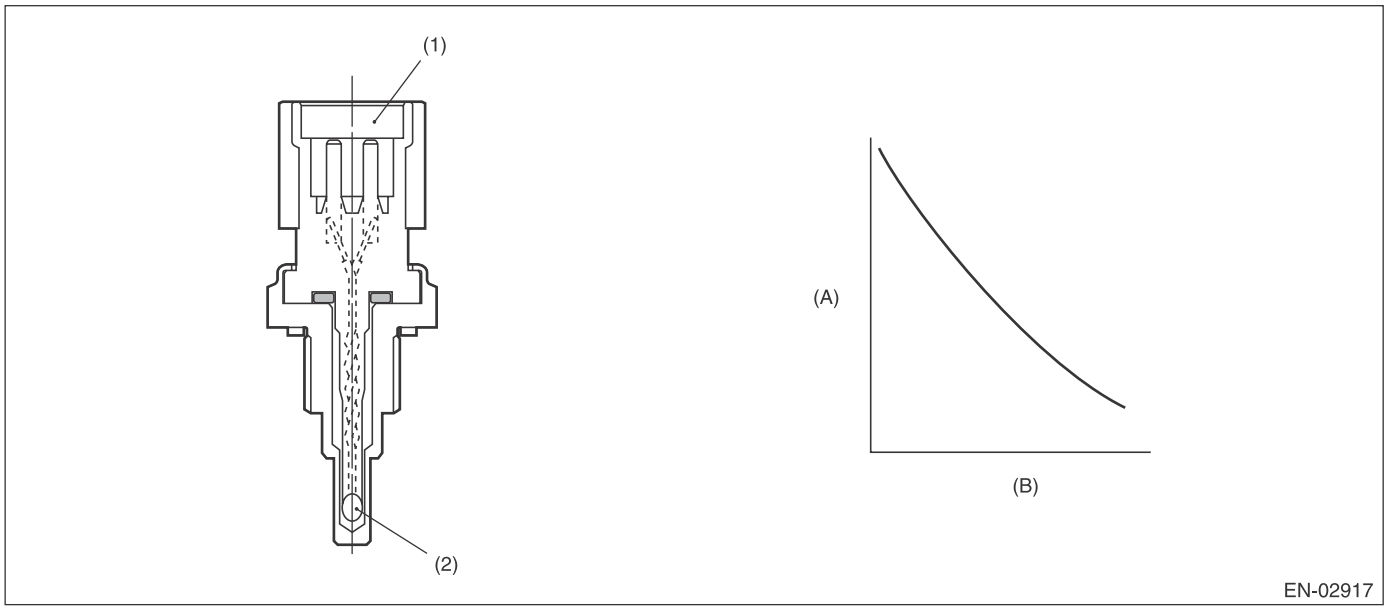

(A) Resistance value (kΩ)
(B) Temperature °C (°F)
(1) Connector
(2) Thermistor element

3. ENABLE CONDITION

Secondary Parameters	Enable Conditions
Engine speed	≥ Value from Map
Battery voltage	≥ 10.9 V

Map

Engine coolant temperature °C (°F)	–40 (–40)	–30 (–22)	–20 (–4)	–10 (14)	0 (32)	10 (50)	20 (68)	30 (86)
Engine speed rpm	500	500	500	500	500	500	500	500

Engine coolant temperature °C (°F)	40 (104)	50 (122)	60 (140)	70 (158)	80 (176)	90 (194)	100 (212)	110 (230)
Engine speed rpm	500	500	500	500	500	500	500	500

4. GENERAL DRIVING CYCLE

Perform the diagnosis only once after engine start.

5. DIAGNOSTIC METHOD

• Abnormality Judgment

Judge as NG if the criteria below are met.

Judgment Value

Malfunction Criteria	Threshold Value
Engine coolant temperature	< 20 °C (68 °F)
Timer for diagnosis after engine start	≥ Judgment value of timer after engine start

Timer for diagnosis after engine start
a. Timer stop at fuel cut
b. During the driving conditions except a) above, timer counts up as follows.
64 ms + TWCNT ms (at 64 ms)
TWCNT is defined as follows,
TWCNT = 0 at idle switch ON,
TWCNT show on the following table at idle switch OFF.

		Vehicle speed km/h (MPH)							
		0 (0)	8 (5)	16 (9.9)	24 (14.9)	32 (19.9)	40 (24.9)	48 (29.8)	56 (34.8)
Temperature °C (°F)	–20 (–4)	0 ms	32.076 ms	39.977 ms	47.879 ms	82.544 ms	117.209 ms	154.214 ms	185.26 ms
	–10 (14)	0 ms	25.704 ms	33.606 ms	41.508 ms	68.52 ms	95.532 ms	125.667 ms	155.802 ms
	0 (32)	0 ms	17.646 ms	25.548 ms	33.45 ms	53.652 ms	73.855 ms	97.12 ms	120.386 ms
	10 (50)	0 ms	7.901 ms	15.802 ms	23.704 ms	37.941 ms	52.177 ms	68.573 ms	82.538 ms
	20 (68)	0 ms	7.901 ms	15.802 ms	23.704 ms	37.941 ms	52.177 ms	68.573 ms	82.538 ms

Judgment value of timer after engine starting
t = 573669 ms – 33924 ms × Ti
Ti : The lowest coolant temperature after engine start
Time Needed for Diagnosis: Less than 1 second
Malfunction Indicator Light Illumination: Illuminates when malfunction occurs in 2 continuous driving cycles.

• Normality Judgment

Judge as OK and clear the NG when the malfunction criteria below are met.

Judgment Value

Malfunction Criteria	Threshold Value
Engine coolant temperature	≥ 20 °C (68 °F)

Time Needed for Diagnosis: Less than 1 second

Z: DTC P0126 INSUFFICIENT ENGINE COOLANT TEMPERATURE FOR STABLE OPERATION

1. OUTLINE OF DIAGNOSIS

Detect the malfunction of the engine coolant temperature sensor characteristics.
Memorize the engine coolant temperature and fuel temperature at the last engine stop, and use them to judge as NG when the engine coolant temperature does not decrease when it should.

2. COMPONENT DESCRIPTION

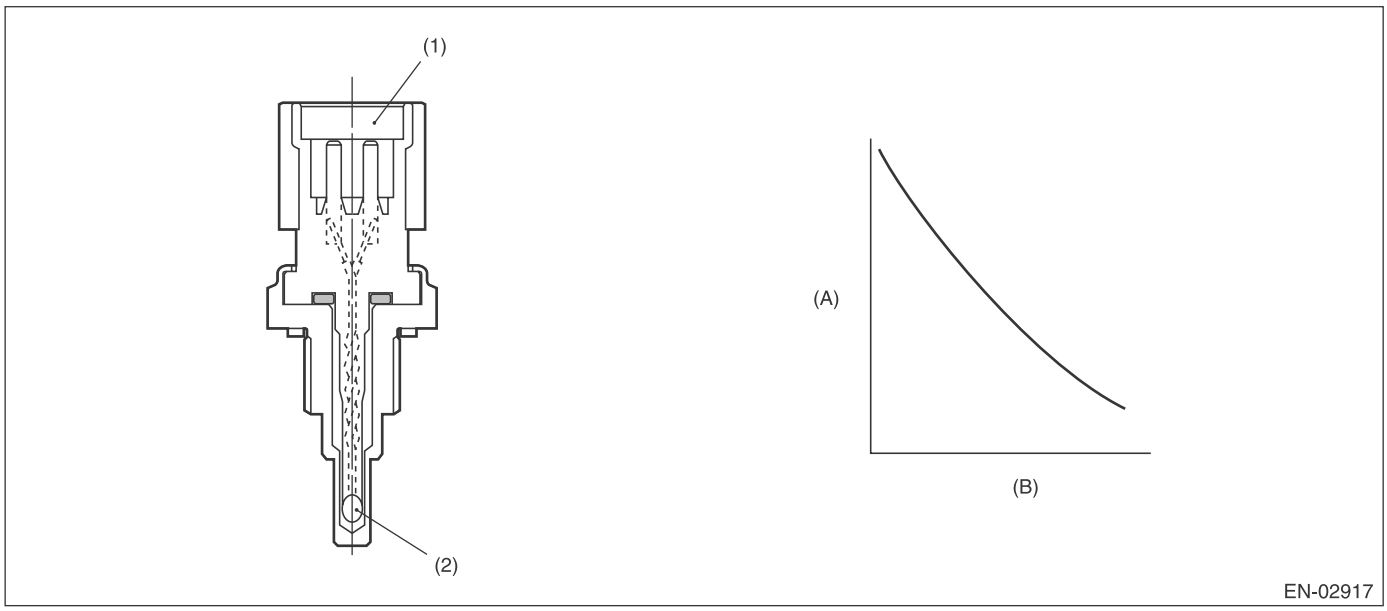

(A) Resistance value (kΩ)
(B) Temperature °C (°F)
(1) Connector
(2) Thermistor element

3. ENABLE CONDITION

Secondary Parameters	Enable Conditions
Battery voltage	≥ 10.9 V
Refueling from the last engine stop till the current engine start	None
Fuel level	≥ 15 ℓ (3.96 US gal, 3.3 Imp gal)
Engine coolant temperature at the last engine stop	≥ 75 °C (167 °F)

4. GENERAL DRIVING CYCLE

Perform the diagnosis only once after starting the engine.

5. DIAGNOSTIC METHOD

• Abnormality Judgment

If the duration of time while the following conditions are met is longer than the time indicated, judge as NG.

Judgment Value

Malfunction Criteria	Threshold Value
Engine coolant temperature at the last engine stop — Minimum engine coolant temperature after the engine start	< 2.5 °C (36.5 °F)
Fuel temperature at the last engine stop — fuel temperature	≥ 5 °C (41 °F)
Intake air temperature — fuel temperature	< 2.5 °C (36.5 °F)
Fuel temperature	< 35 °C (95 °F)

Time Needed for Diagnosis: 2500 ms
Malfunction Indicator Light Illumination: Illuminates when malfunction occurs in 2 continuous driving cycles.

• Normality Judgment

Judge as OK and clear the NG if the continuous time while the following conditions are established is more than the predetermined time.

Judgment Value

Malfunction Criteria	Threshold Value
Engine coolant temperature at the last engine stop — Minimum engine coolant temperature after the engine start	≥ 2.5 °C (36.5 °F)

Time Needed for Diagnosis: Less than 1 second

AA:DTC P0128 COOLANT THERMOSTAT (ENGINE COOLANT TEMPERATURE BELOW THERMOSTAT REGULATING TEMPERATURE)

1. OUTLINE OF DIAGNOSIS

Detect malfunctions of the thermostat function.
Judge as NG when the engine coolant temperature is lower than the estimated engine coolant temperature and the difference between them is large. Judge as OK when the engine coolant temperature becomes to 75°C (167°F), and the difference is small, before judging NG.

2. COMPONENT DESCRIPTION

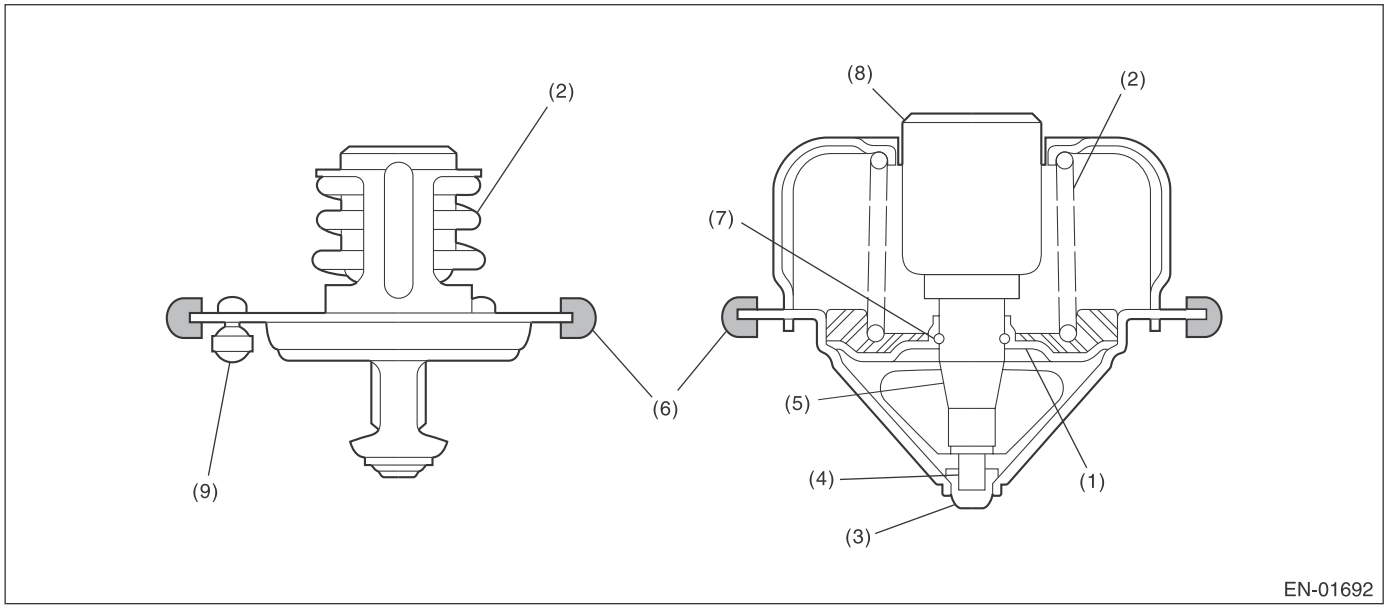

(1) Valve
(2) Spring
(3) Stopper
(4) Piston
(5) Guide
(6) Rubber seal
(7) Stop ring
(8) Wax element
(9) Jiggle valve

3. ENABLE CONDITION

Secondary Parameters	Enable Conditions
None	

4. GENERAL DRIVING CYCLE

Always perform the diagnosis continuously.

5. DIAGNOSTIC METHOD

• Abnormality Judgment

If the duration of time while the following conditions are met is longer than the time indicated, judge as NG.

Judgment Value

Malfunction Criteria	Threshold Value
Battery voltage	≥ 10.9 V
Estimate ambient temperature	≥ –7 °C (19.4 °F)
Thermostat malfunction diagnosis	Incomplete
Engine coolant temperature at engine starting	< 55 °C (131 °F)
Estimated coolant temperature	≥ 77 °C (170.6 °F)
Engine coolant temperature	≤ 77 °C (170.6 °F)
(Estimated – Measured) Engine coolant temperature	> 30 °C (86 °F)
Vehicle speed	≥ 30 km/h (18.6 MPH)

Time Needed for Diagnosis:64 ms × 3 time(s) × 152 time(s)
Malfunction Indicator Light Illumination: Illuminates when malfunction occurs in 2 continuous driving cycles.

• Normality Judgment

Judge as OK and clear the NG if the continuous time while the following conditions are established is more than the predetermined time.

Judgment Value

Malfunction Criteria	Threshold Value
Battery voltage	≥ 10.9 V
Estimate ambient temperature	≥ –7 °C (19.4 °F)
Thermostat malfunction diagnosis	Incomplete
Engine coolant temperature at engine starting	< 55 °C (131 °F)
Engine coolant temperature	≥ 77 °C (170.6 °F)
(Estimated – Measured) Engine coolant temperature	≤ 30 °C (86 °F)

Time Needed for Diagnosis: Less than 1 second

AB:DTC P0131 O2 SENSOR CIRCUIT LOW VOLTAGE (BANK 1 SENSOR 1)

1. OUTLINE OF DIAGNOSIS

Detect the open or short circuit of sensor.
Judge as NG, when the element voltage is out of the specified range.

2. COMPONENT DESCRIPTION

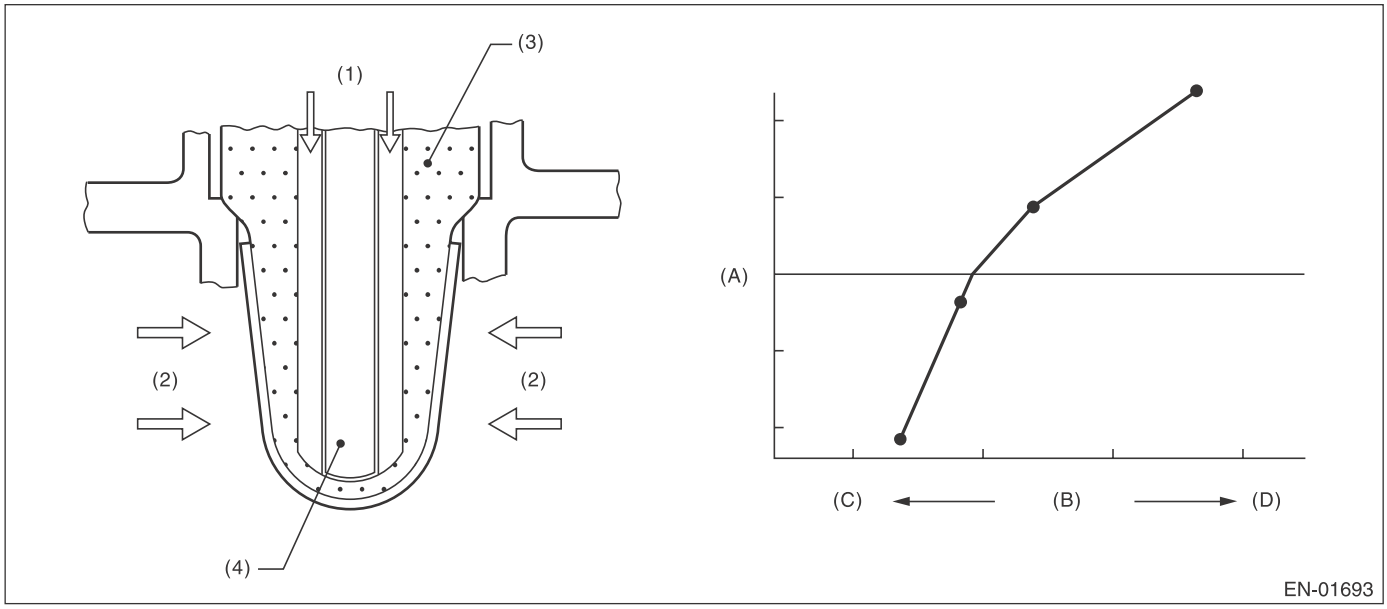

(A) Electromotive force
(B) Air fuel ratio
(C) Lean
(D) Rich

(1) Atmosphere
(2) Exhaust gas
(3) ZrO_2
(4) Ceramic heater

3. ENABLE CONDITION

Secondary Parameters	Enable Conditions
Battery voltage	≥ 10.9 V

4. GENERAL DRIVING CYCLE

Always perform the diagnosis continuously.

5. DIAGNOSTIC METHOD

• Abnormality Judgment

If the duration of time while the following conditions are met is longer than the time indicated, judge as NG.

Judgment Value

Malfunction Criteria	Threshold Value
Input voltage (+)	< 1.128 V
or	
Input voltage (–)	< 0.23 V
or	
|Input voltage (+) – Input voltage (–)|	< 0.644 V

Time Needed for Diagnosis:
Input voltage (+): 1000 ms
Input voltage (–): 1000 ms
|Input voltage (+) – Input voltage (–)|: 1000 ms
Malfunction Indicator Light Illumination: Illuminates as soon as a malfunction occurs.

• Normality Judgment

Judge as OK and clear the NG if the continuous time while the following conditions are established is more than the predetermined time.

Judgment Value

Malfunction Criteria	Threshold Value
Input voltage (+)	≥ 1.128 V
Input voltage (–)	≥ 0.23 V
|Input voltage (+) – Input voltage (–)|	≥ 0.644 V

Time Needed for Diagnosis: Less than 1 second

AC:DTC P0132 O2 SENSOR CIRCUIT HIGH VOLTAGE (BANK 1 SENSOR 1)

1. OUTLINE OF DIAGNOSIS

Detect the open or short circuit of sensor.
Judge as NG, when the element voltage is out of the specified range.

2. COMPONENT DESCRIPTION

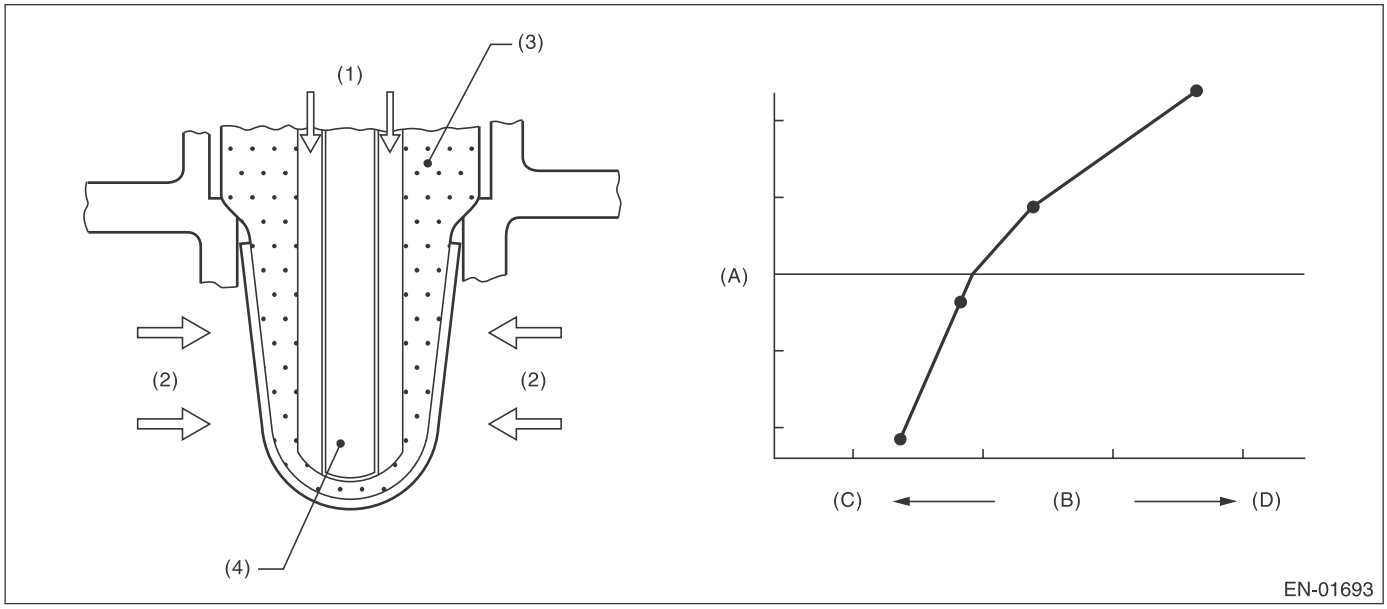

(A) Electromotive force
(B) Air fuel ratio
(C) Lean
(D) Rich

(1) Atmosphere
(2) Exhaust gas
(3) ZrO_2
(4) Ceramic heater

3. ENABLE CONDITION

Secondary Parameters	Enable Conditions
Battery voltage	≥ 10.9 V

4. GENERAL DRIVING CYCLE

Always perform the diagnosis continuously.

5. DIAGNOSTIC METHOD

• Abnormality Judgment

If the duration of time while the following conditions are met is longer than the time indicated, judge as NG.

Judgment Value

Malfunction Criteria	Threshold Value
Input voltage (+)	> 3.589 V
or	
Input voltage (–)	> 3.541 V

Time Needed for Diagnosis:
Input voltage (+): 1000 ms
Input voltage (–): 1000 ms
Malfunction Indicator Light Illumination: Illuminates as soon as a malfunction occurs.

• Normality Judgment

Judge as OK and clear the NG if the continuous time while the following conditions are established is more than the predetermined time.

Judgment Value

Malfunction Criteria	Threshold Value
Input voltage (+)	≤ 3.589 V
Input voltage (–)	≤ 3.541 V

Time Needed for Diagnosis: Less than 1 second

AD:DTC P0133 O2 SENSOR CIRCUIT SLOW RESPONSE (BANK 1 SENSOR 1)

1. OUTLINE OF DIAGNOSIS

Detect the slow response of front oxygen (A/F) sensor.
Front oxygen (A/F) sensor cover has some ventilation holes for exhaust gas. Clogged ventilation holes are diagnosed.
When the holes are clogged, the A/F output variation becomes slow comparing with the actual A/F variation because oxygen which reaches the zirconia layer is insufficient. Therefore, if the sensor cover holes are clogged, the rich to lean judgment in the ECM is delayed when the actual change from rich to lean occurs.
Judge as NG when the actual movement in comparison to the ECM control amount is slow.

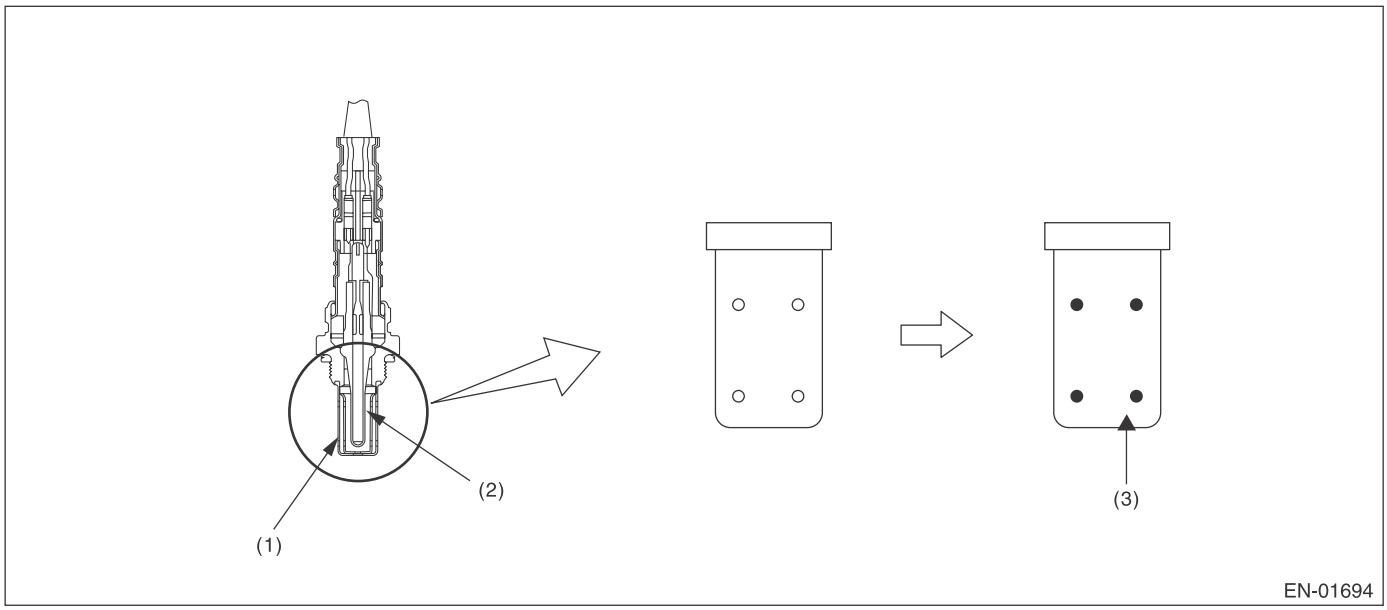

(1) Cover (2) Zirconia (3) Clogging

2. COMPONENT DESCRIPTION

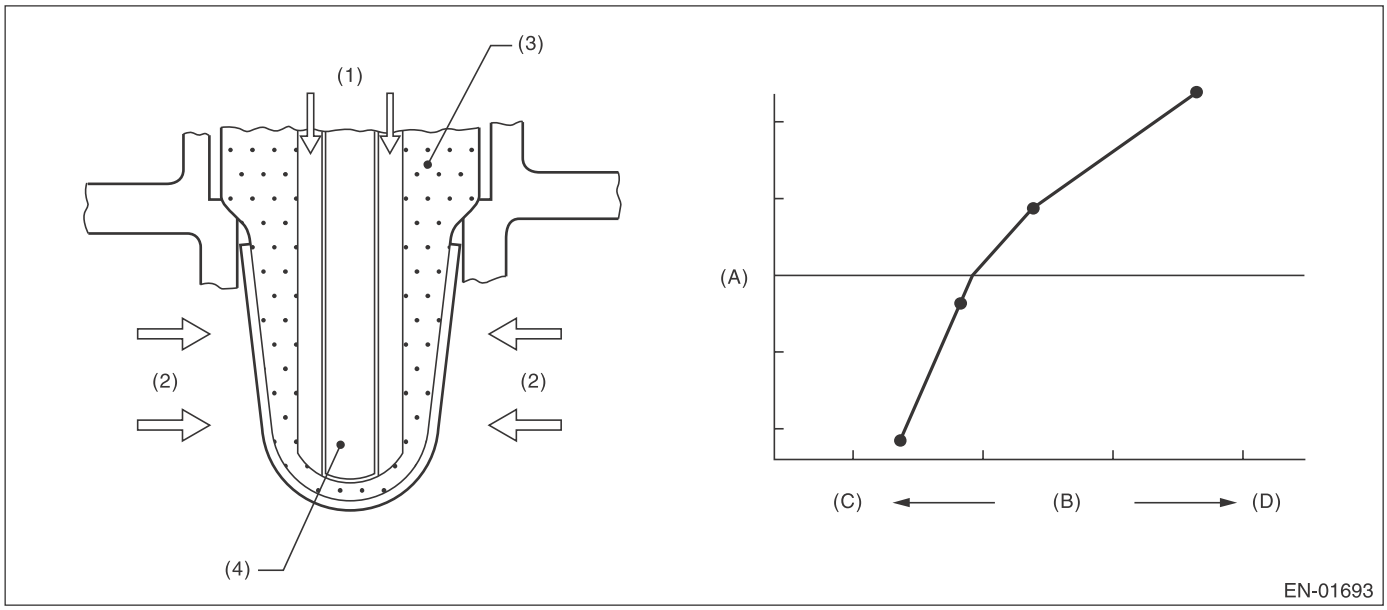

(A) Electromotive force
(B) Air fuel ratio
(C) Lean
(D) Rich

(1) Atmosphere
(3) ZrO_2
(4) Ceramic heater
(2) Exhaust gas

3. ENABLE CONDITION

Secondary Parameters	Enable Conditions
Time needed for all secondary parameters to be in enable conditions	≥ 1024 ms
Battery voltage	≥ 10.9 V
Barometric pressure	> 75 kPa (563 mmHg, 22.2 inHg)
Closed loop control with main feedback	Operation
Front oxygen (A/F) sensor impedance	0 Ω — 50 Ω
Elapsed time after starting the engine	≥ 120000 ms
Engine coolant temperature	≥ 75 °C (167 °F)
Engine speed	1000 rpm — 3200 rpm
Vehicle speed	10 km/h — 120 km/h (6.2 MPH — 74.6 MPH)
Amount of intake air	10 g/s — 40 g/s (0.35 oz/s — 1.41 oz/s)
Engine load	< 0.02 g/rev (0 oz/rev)
Learning value of EVAP conc. during purge	< 0.2
Total time of operating canister purge	≥ 19.9 s

4. GENERAL DRIVING CYCLE

Perform diagnosis only once at a constant speed of 10 km/h — 120 km/h (6.2 MPH — 74.6 MPH) 120000 ms or more after starting the engine.

5. DIAGNOSTIC METHOD

Calculate faf difference every 32 ms × 4 , and the λ value difference. Calculate the diagnosis value after calculating 820 time(s).

- **Abnormality Judgment**

If the duration of time while the following conditions are met is longer than the time indicated, judge as NG.

Judgment Value

Malfunction Criteria	Threshold Value
parafca = td2faf/td2lmd where, td2faf (N) = td2faf (n–1) + |d2faf (n)| td2lmd (N) = td2lmd (n–1) + |d2lmd (n)| add up to 32 ms × 4 × 820 time(s). d2faf (n) = (faf (n) – faf (n–1)) – (faf (n–1) – faf (n–2)) d2lmd (n) = (lmd (n) – lmd (n–1)) – (lmd (n–1) – lmd (n–2)) faf = main feedback compensation coefficient every 128 milliseconds lmd = output lambda every 128 milliseconds	> 0.3

Time Needed for Diagnosis: 32 ms × 4 × 820 time(s)
Malfunction Indicator Light Illumination: Illuminates when malfunction occurs in 2 continuous driving cycles.

- **Normality Judgment**

Judge as OK and clear the NG if the continuous time while the following conditions are established is more than the predetermined time.

Judgment Value

Malfunction Criteria	Threshold Value
parafca = td2faf/td2lmd where, td2faf (N) = td2faf (n–1) + |d2faf (n)| td2lmd (N) = td2lmd (n–1) + |d2lmd (n)| add up to 32 ms × 4 × 820 time(s). d2faf (n) = (faf (n) – faf (n–1)) – (faf (n–1) – faf (n–2)) d2lmd (n) = (lmd (n) – lmd (n–1)) – (lmd (n–1) – lmd (n–2)) faf = main feedback compensation coefficient every 128 milliseconds lmd = output lambda every 128 milliseconds	≤ 0.3

Time Needed for Diagnosis: 32 ms × 4 × 820 time(s)

AE:DTC P0134 O2 SENSOR CIRCUIT NO ACTIVITY DETECTED (BANK 1 SENSOR 1)

1. OUTLINE OF DIAGNOSIS

Detect open circuits of the sensor.
Judge as NG when the impedance of the element is large.

2. COMPONENT DESCRIPTION

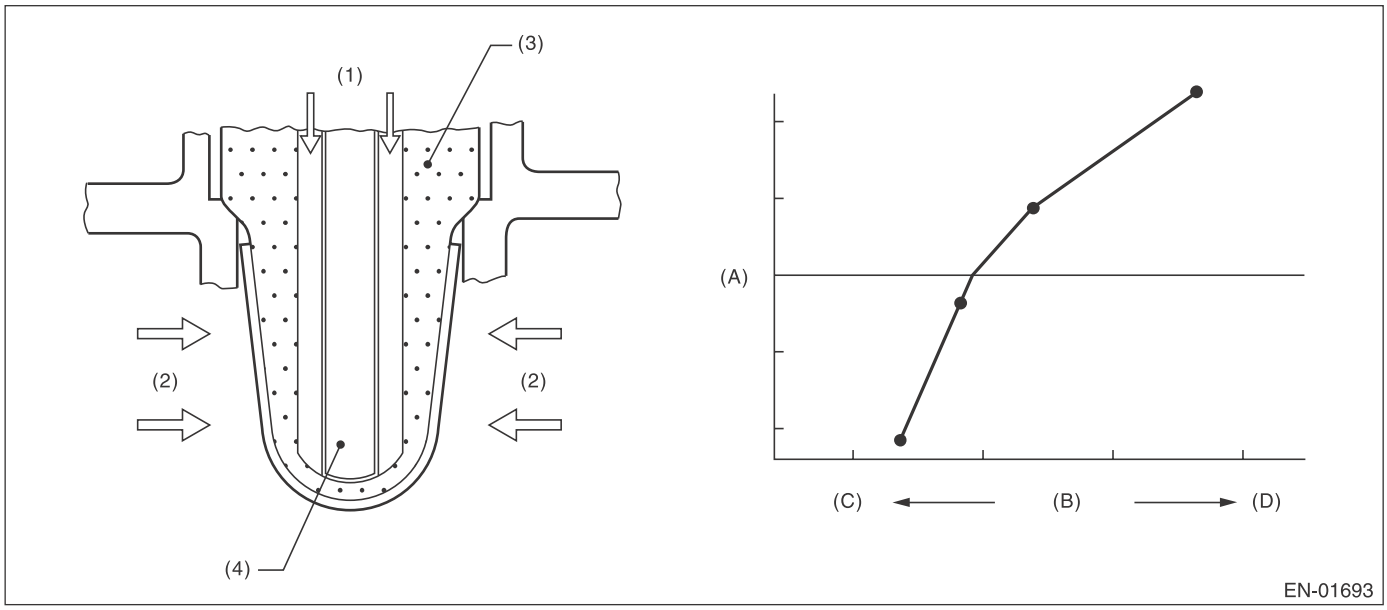

(A) Electromotive force
(B) Air fuel ratio
(C) Lean
(D) Rich

(1) Atmosphere
(2) Exhaust gas
(3) ZrO_2
(4) Ceramic heater

3. ENABLE CONDITION

Secondary Parameters	Enable Conditions
None	

4. GENERAL DRIVING CYCLE

Always perform the diagnosis continuously.

5. DIAGNOSTIC METHOD

• Abnormality Judgment

If the duration of time while the following conditions are met is longer than the time indicated, judge as NG.

Judgment Value

Malfunction Criteria	Threshold Value
Battery voltage	≥ 10.9 V
Time of heater control duty at 70 % or more	≥ 36000 ms
Front oxygen (A/F) sensor impedance.	> 500 Ω

Time Needed for Diagnosis: 5000 ms
Malfunction Indicator Light Illumination: Illuminates as soon as a malfunction occurs.

• Normality Judgment

Judge as OK and clear the NG if the continuous time while the following conditions are established is more than the predetermined time.

Judgment Value

Malfunction Criteria	Threshold Value
Battery voltage	≥ 10.9 V
Front oxygen (A/F) sensor impedance.	≤ 500 Ω

Time Needed for Diagnosis: Less than 1 second

AF:DTC P0137 O2 SENSOR CIRCUIT LOW VOLTAGE (BANK 1 SENSOR 2)

1. OUTLINE OF DIAGNOSIS

Detect continuity NG of the oxygen sensor. If the oxygen sensor voltage reading is not within the probable range considering the operating conditions, judge as NG.

2. COMPONENT DESCRIPTION

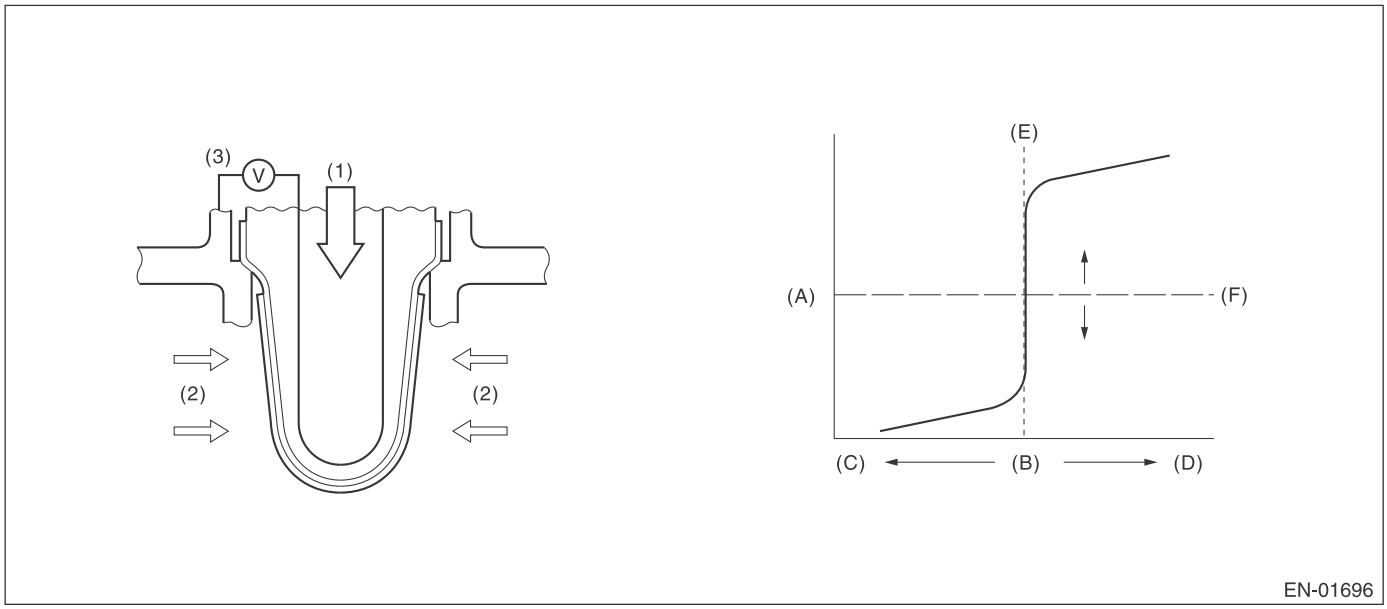

(A)	Electromotive force	(B)	Air fuel ratio	(C)	Rich
(D)	Lean	(E)	Theoretical air fuel ratio	(F)	Comparative voltage
(1)	Atmosphere	(2)	Exhaust gas	(3)	Electromotive force

3. ENABLE CONDITION

Used for abnormality judgment

Secondary Parameters	Enable Conditions
High	
Secondary air system	Not in operation
Closed loop control at the oxygen sensor	In operation
Misfire detection every 200 rotations	< 5 time(s)
Front oxygen (A/F) sensor compensation coefficient	Not in limit value
Battery voltage	≥ 10.9 V
Engine coolant temperature	≥ 75 °C (167 °F)
Low (1)	
Secondary air system	Not in operation
Closed loop control at the oxygen sensor	In operation
Misfire detection every 200 rotations	< 5 time(s)
Front oxygen (A/F) sensor compensation coefficient	Not in limit value
Battery voltage	≥ 10.9 V
Engine coolant temperature	≥ 75 °C (167 °F)
Amount of intake air	≥ 10 g/s (0.35 oz/s)
Low (2)	
Secondary air system	Not in operation
Closed loop control at the oxygen sensor	In operation
Misfire detection every 200 rotations	< 5 time(s)
Front oxygen (A/F) sensor compensation coefficient	Not in limit value
Battery voltage	≥ 10.9 V
Engine coolant temperature	≥ 75 °C (167 °F)
Amount of intake air	< 10 g/s (0.35 oz/s)
Current continuation time of the rear oxygen sensor heater	≥ 30000 ms
Low (3)	
Secondary air system	Not in operation
Closed loop control at the oxygen sensor	In operation
Misfire detection every 200 rotations	< 5 time(s)
Front oxygen (A/F) sensor compensation coefficient	Not in limit value
Battery voltage	≥ 10.9 V
Engine coolant temperature	≥ 75 °C (167 °F)
Amount of intake air	< 10 g/s (0.35 oz/s)
Current continuation time of the rear oxygen sensor heater	≥ 30000 ms
Fuel cut	Experienced

Used for normality judgment

Secondary Parameters	Enable Conditions
Secondary air system	Not in operation
Closed loop control at the oxygen sensor	In operation
Misfire detection every 200 rotations	< 5 time(s)
Front oxygen (A/F) sensor compensation coefficient	Not in limit value
Battery voltage	≥ 10.9 V
Engine coolant temperature	≥ 75 °C (167 °F)

4. GENERAL DRIVING CYCLE

After starting the engine, continuously perform the diagnosis with the same engine condition.

5. DIAGNOSTIC METHOD

• Abnormality Judgment

If the duration of time while the following conditions are met is longer than the time indicated, judge as NG.

Judgment Value

Malfunction Criteria	Threshold Value	DTC
High Sensor output voltage	> 1.2 V	P0138
Low Sensor output voltage	< 0.03 V	P0137

Time Needed for Diagnosis:

High: 2500 ms
Low (1): 20000 ms
Low (2): 40000 ms
Low (3): Value from Map

Map

Fuel cut time (ms)	0	2000	10000
Time Needed for Diagnosis (ms)	40000	40000	60000

Malfunction Indicator Light Illumination: Illuminates when malfunction occurs in 2 continuous driving cycles.

• Normality Judgment

Judge as OK and clear the NG if the continuous time while the following conditions are established is more than the predetermined time.

Judgment Value

Malfunction Criteria	Threshold Value	DTC
High Sensor output voltage	≤ 1.2 V	P0138
Low Sensor output voltage	≥ 0.03 V	P0137

Time Needed for Diagnosis:

High: Less than 1 s
Low (1): Less than 1 s
Low (2): Less than 1 s
Low (3): Less than 1 s

AG:DTC P0138 O2 SENSOR CIRCUIT HIGH VOLTAGE (BANK 1 SENSOR 2)

1. OUTLINE OF DIAGNOSIS

NOTE:
For the detection standard, refer to DTC P0137. <Ref. to GD(H4SO)-54, DTC P0137 O2 SENSOR CIRCUIT LOW VOLTAGE (BANK 1 SENSOR 2), Diagnostic Trouble Code (DTC) Detecting Criteria.>

AH:DTC P0139 O2 SENSOR CIRCUIT SLOW RESPONSE (BANK 1 SENSOR 2)

1. OUTLINE OF DIAGNOSIS

Detect the slow response of the oxygen sensor.
Judge as NG if either the rich to lean response diagnosis or lean to rich response diagnosis is NG, and Judge as OK if both are OK.
[Rich → lean diagnosis response]
1. Measure the response time for oxygen sensor output changes when the A/F ratio changes to rich to lean. If the measured response time is larger than the threshold value, it is NG. If it is smaller, it is OK. Response time calculation is categorized in two by voltage difference.
   - Response time in small voltage difference: Intermediate
   - Response time in large voltage difference: Wide
2. Judge as NG when the oxygen sensor voltage is large (rich) even after deceleration fuel cut has occurred.
[Lean → rich diagnosis response]
1. Measure the response time for oxygen sensor output changes when the A/F ratio changes to lean to rich. If the measured response time is larger than the threshold value, it is NG.
2. Judge as NG when the oxygen sensor voltage remains small when recovering from a deceleration fuel cut.

Diagnostic method

Measure the response time of the output change of the oxygen sensor when the A/F ratio changes to rich to lean. And Judge as NG when the measured response time is larger than the threshold value.

2. COMPONENT DESCRIPTION

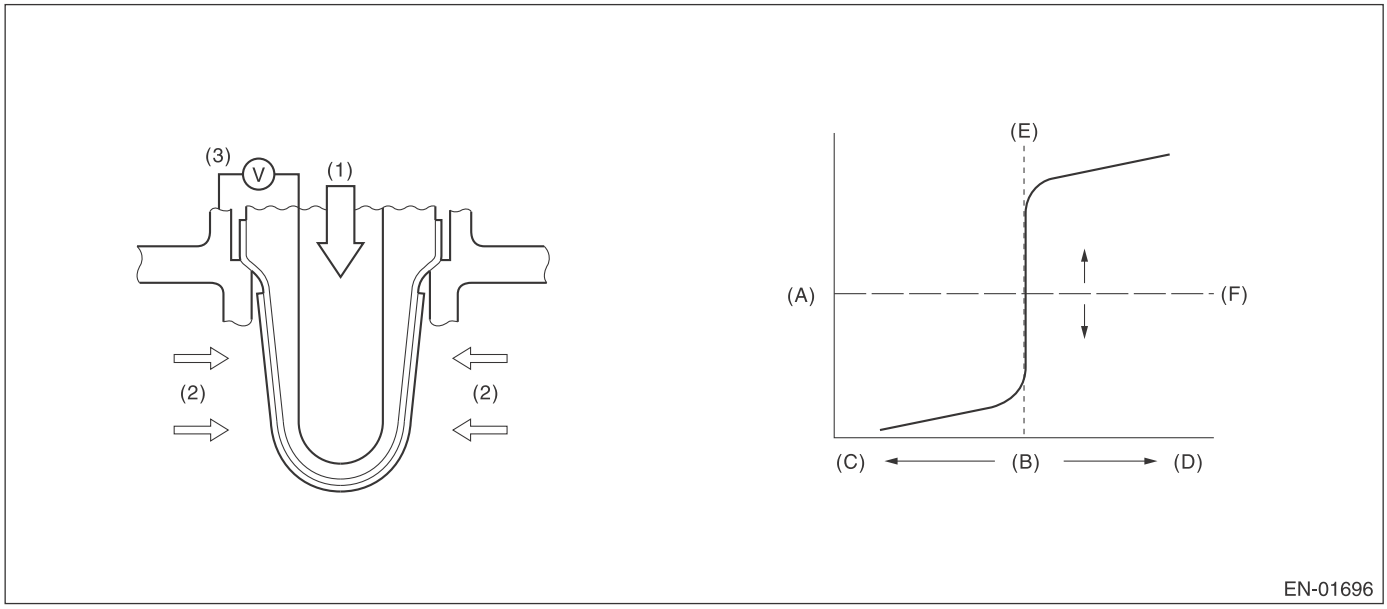

(A)	Electromotive force	(B)	Air fuel ratio	(C)	Rich
(D)	Lean	(E)	Theoretical air fuel ratio	(F)	Comparative voltage
(1)	Atmosphere	(2)	Exhaust gas	(3)	Electromotive force

3. ENABLE CONDITION

Rich → lean diagnosis response

Secondary Parameters	Enable Conditions
Battery voltage	≥ 10.9 V
A/F main feedback control condition	Complete
Deceleration fuel cut time of 5000 ms or more (intermediate) Deceleration fuel cut time of 5000 ms or more (wide)	Experienced
After fuel cut	≥ 2000 ms (Intermediate) ≥ 2000 ms (Wide)
Estimated temperature of the rear oxygen sensor element	≥ 500 °C (932 °F) (Intermediate) ≥ 500 °C (932 °F) (Wide)
Number of deceleration fuel cut	≥ 1 time(s)

4. GENERAL DRIVING CYCLE

Perform diagnosis once during deceleration fuel cut from a constant and high speed driving, when rear oxygen sensor is warmed up sufficiently. (Pay attention to the oxygen sensor voltage for the timing of the deceleration.)

5. DIAGNOSTIC METHOD

- Intermediate

When the oxygen sensor output voltage changes from 0.55 V (rich) to 0.15 V (lean), calculate the minimum response time for output change between 0.5 V and 0.2 V for the judgment criteria.

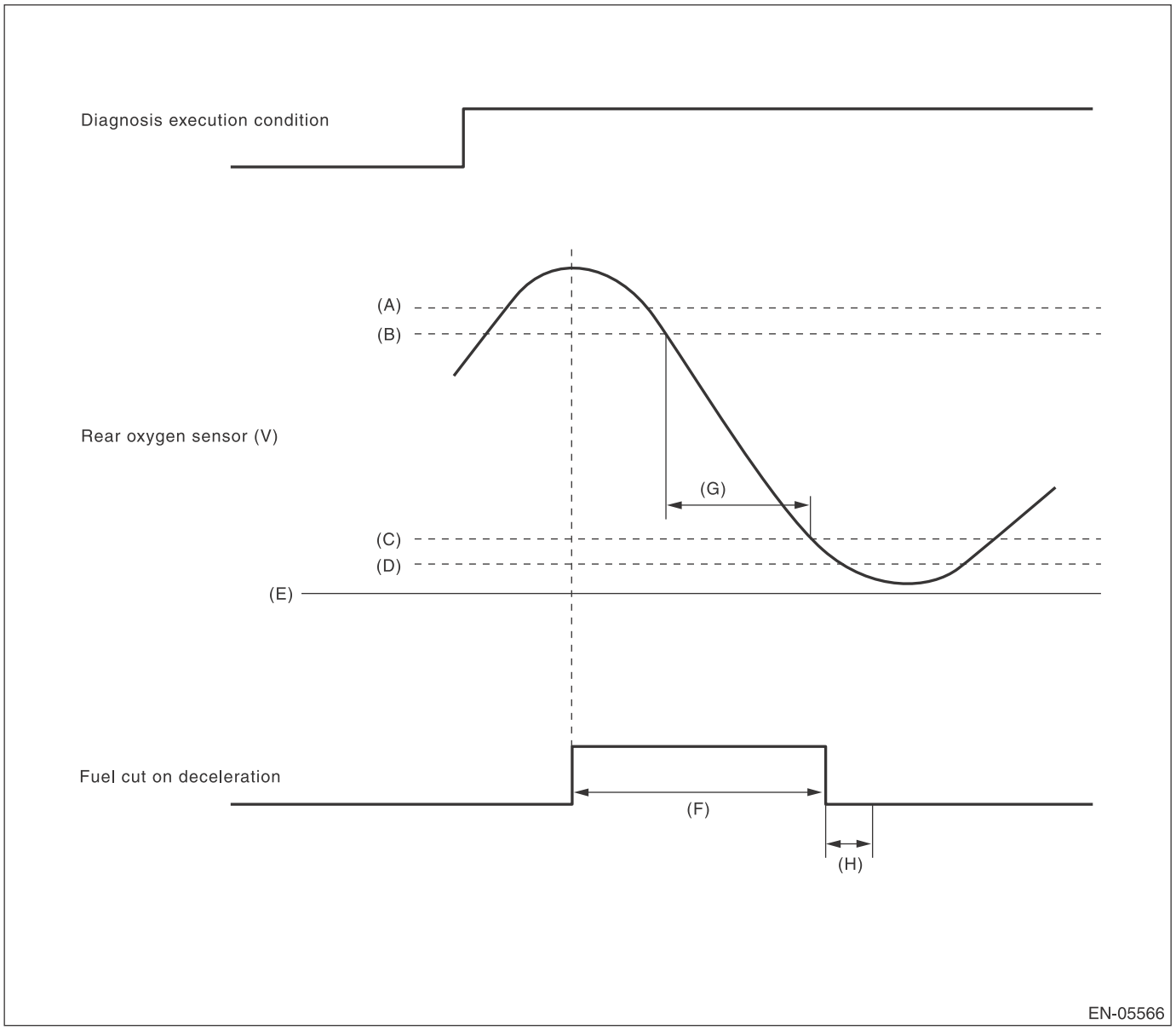

(A) 0.55 V
(B) 0.5 V
(C) 0.2 V
(D) 0.15 V
(E) 0 V
(F) More than 5000 ms
(G) Measure the response time.
(H) Execute the malfunction judgment in 2000 ms from the recovery of fuel cut on deceleration.

- Wide

When the oxygen sensor output voltage changes from 0.65 V (rich) to 0.05 V (lean), calculate the minimum response time for output change between 0.6 V and 0.1 V for the judgment criteria.

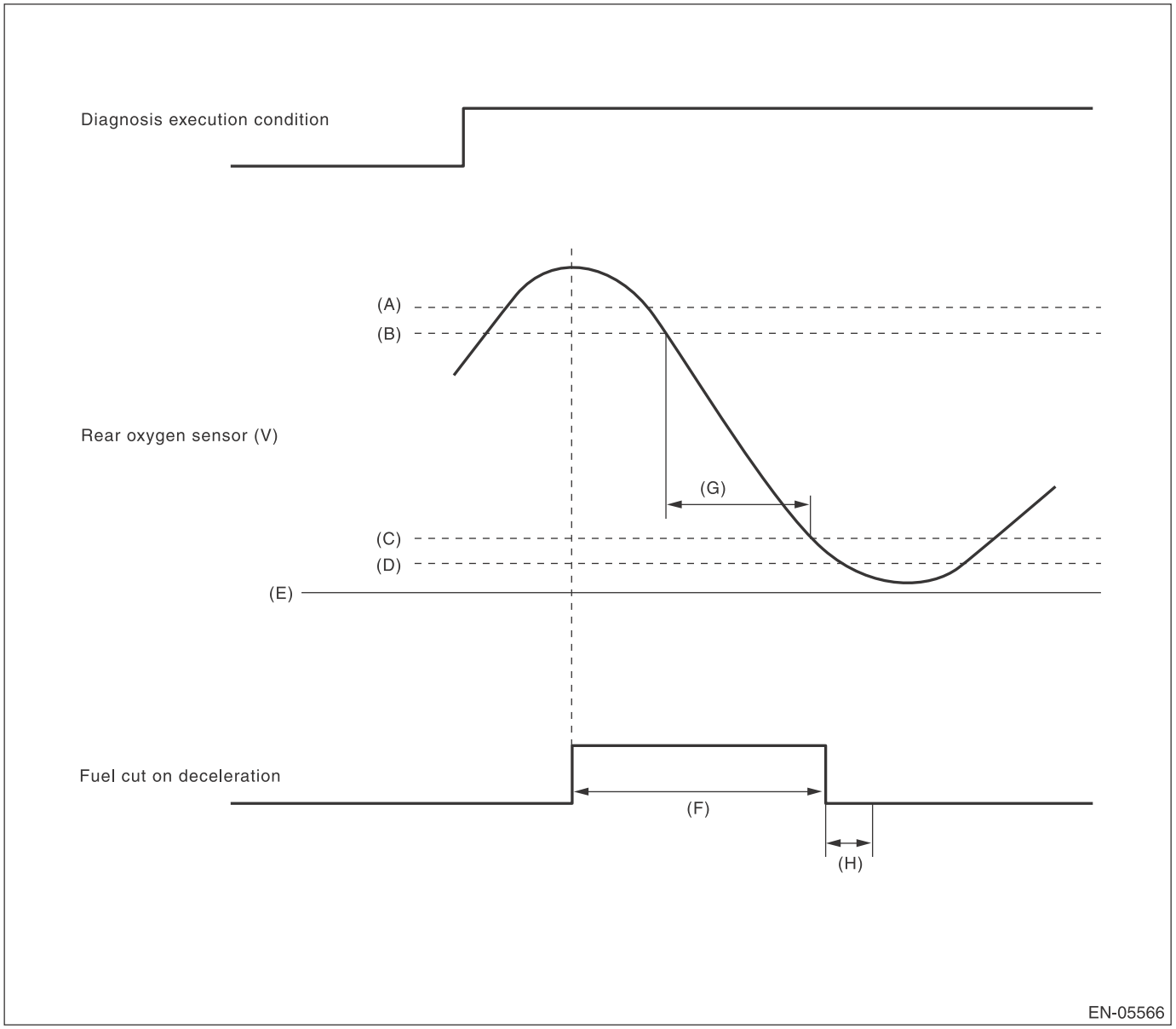

(A) 0.65 V
(B) 0.6 V
(C) 0.1 V
(D) 0.05 V
(E) 0 V
(F) More than 5000 ms
(G) Measure the response time.
(H) Execute the malfunction judgment in 2000 ms from the recovery of fuel cut on deceleration.

• Abnormality Judgment

1) Judge as NG when the judgment value is larger than the threshold value after deceleration fuel cut.
Response time (diagnosis value) > threshold value → abnormal

NOTE:
Perform NG judgment only during fuel cut, when exhaust gas apparently changes from rich → lean. Even without deceleration fuel cut, judge as OK if the value is below the threshold.
2) Judge as NG when the oxygen sensor voltage at a deceleration fuel cut is large.
Judge as NG when oxygen sensor voltage is large even after a long period of deceleration fuel cut has completed.

Judgment value (Intermediate)

Malfunction Criteria	Threshold Value
Shortest time change from rich (0.5 V O_2 output) to lean (0.2 V) when voltage reduces from 0.55 V to 0.15 V or Longest time over 0.55 V	> 491 ms ≥ 2000 ms

Judgment value (Wide)

Malfunction Criteria	Threshold Value
Shortest time change from rich (0.6 V O_2 output) to lean (0.1 V) when voltage reduces from 0.65 V to 0.05 V or Longest time over 0.65 V	> Value from Map ≥ 2000 ms

Map

Estimated temperature of rear oxygen sensor element when fuel cut starts °C (°F)	0 (32)	450 (842)	500 (932)	1000 (1832)
Longest time in rich status after fuel cut (ms)	2000	2000	2000	2000

Time Needed for Diagnosis: 1 time(s)
Malfunction Indicator Light Illumination: Illuminates when malfunction occurs in 2 continuous driving cycles.

• Normality Judgment

1) Regardless of a deceleration fuel cut, if the response time (diagnosis value) when the oxygen sensor voltage has changed from rich to lean is shorter than the threshold value (judgment value), judge as a normal condition.
Response time (diagnosis value) ≤ threshold value → normal
2) Do not judge as a normal condition.
Judge as OK and clear the NG if the following conditions are established.

Judgment value (Intermediate)

Malfunction Criteria	Threshold Value
Shortest time change from rich (0.5 V O_2 output) to lean (0.2 V) when voltage reduces from 0.55 V to 0.15 V	≤ 491 ms

Judgment value (Wide)

Malfunction Criteria	Threshold Value
Shortest time change from rich (0.6 V O_2 output) to lean (0.1 V) when voltage reduces from 0.65 V to 0.05 V	≤ 2000 ms

Time Needed for Diagnosis: 1 time(s)

6. ENABLE CONDITION

Lean → rich response diagnosis

Secondary Parameters	Enable Conditions
Battery voltage	≥ 10.9 V
A/F main feedback control condition	Complete
Deceleration fuel cut time is 6000 ms or more.	Experienced
After fuel cut	≥ 2000 ms
Number of deceleration fuel cut	≥ 1 time(s)

7. GENERAL DRIVING CYCLE

Perform diagnosis once during deceleration fuel cut from a constant and high speed driving, when rear oxygen sensor is warmed up sufficiently. (Pay attention to the oxygen sensor voltage for the timing of the deceleration.)

8. DIAGNOSTIC METHOD

When the oxygen sensor output voltage changes from 0.25 V (lean) to 0.55 V (rich), calculate the minimum response time for output change between 0.3 V and 0.5 V for the judgment criteria.

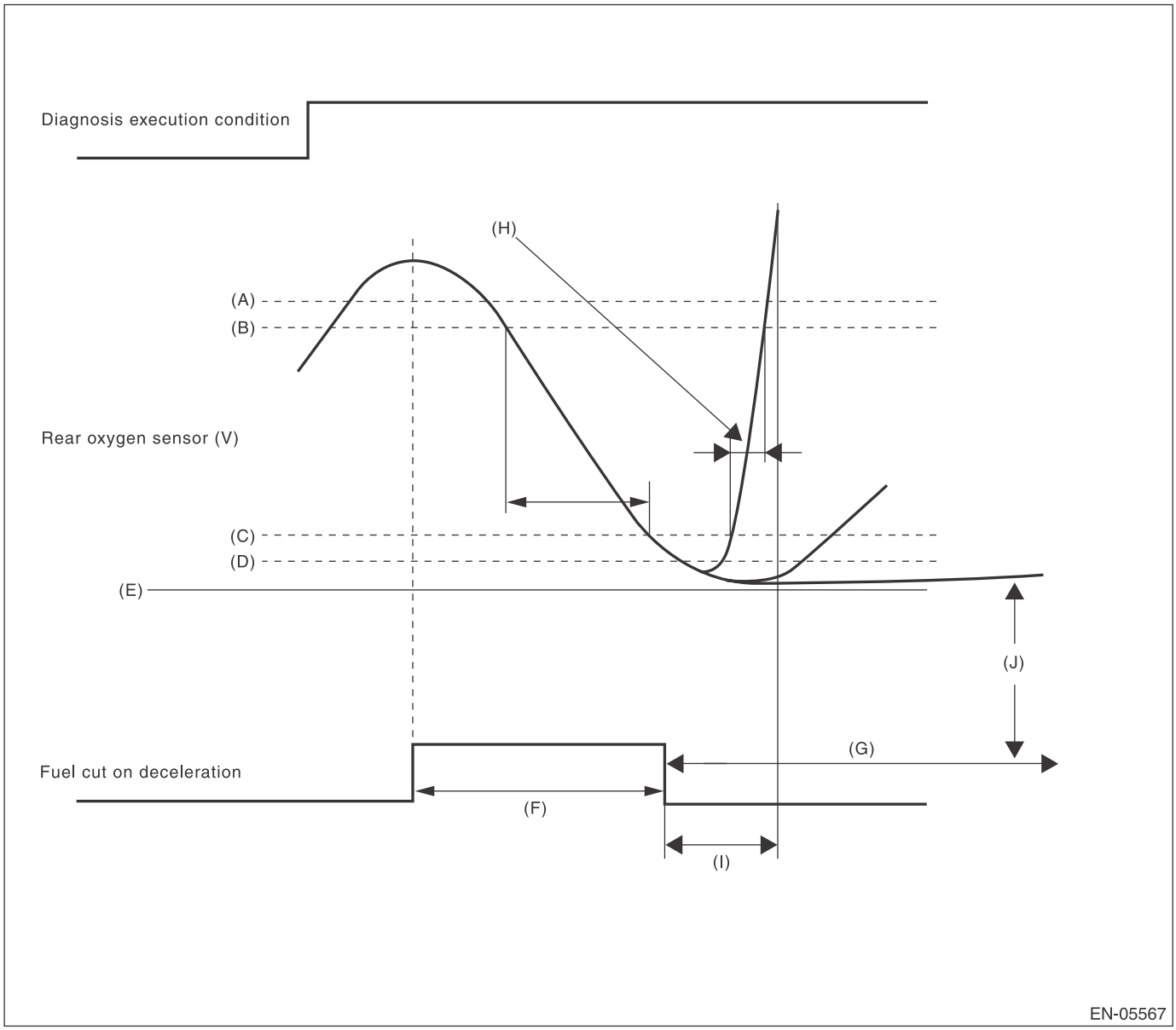

(A) 0.55 V
(B) 0.5 V
(C) 0.3 V
(D) 0.25 V
(E) 0 V
(F) More than 5 seconds
(G) More than 120000 ms
(H) Measure the response time (diagnostic value).
(I) Execute the malfunction judgment in 4000 ms from the recovery of fuel cut on deceleration.
(J) Judge NG when the voltage of rear oxygen sensor is 0.25 V or less for 120000 ms or more after recovery of fuel cut on deceleration.

- **Abnormality Judgment**

1) Judge as NG when the judgment value is larger than the threshold value after deceleration fuel cut.
Response time (diagnosis value) > threshold value → abnormal
2) If the oxygen sensor voltage is small after recovering from a deceleration fuel cut, and remains small, judge as NG.

Judgment Value

Malfunction Criteria	Threshold Value
Shortest time change from lean (0.3 V O_2 output) to rich (0.5 V) when voltage changes from 0.25 V to 0.55 V	> 4000 ms
or	
Longest time under 0.25 V	≥ 120000 ms

Time Needed for Diagnosis: 1 time(s)
Malfunction Indicator Light Illumination: Illuminates when malfunction occurs in 2 continuous driving cycles.

- **Normality Judgment**

1) Regardless of a deceleration fuel cut, if the response time (diagnosis value) when the oxygen sensor voltage has changed from rich to lean is shorter than the threshold value (judgment value), judge as a normal condition.
Response time (diagnosis value) ≤ threshold value → normal
2) Do not judge as a normal condition.
Judge as OK and clear the NG if the following conditions are established.

Judgment Value

Malfunction Criteria	Threshold Value
Shortest time change from lean (0.3 V O_2 output) to rich (0.5 V) when voltage changes from 0.25 V to 0.55 V	≤ 4000 ms

Time Needed for Diagnosis: 1 time(s)

AI: DTC P0140 O2 SENSOR CIRCUIT NO ACTIVITY DETECTED (BANK1 SENSOR2)

1. OUTLINE OF DIAGNOSIS

Detect the rear oxygen sensor open or short circuit. Judge as NG when the rear oxygen sensor voltage can be determined to be abnormal considering conditions such as intake air amount, engine coolant temperature, main feedback control and deceleration fuel cut.

2. COMPONENT DESCRIPTION

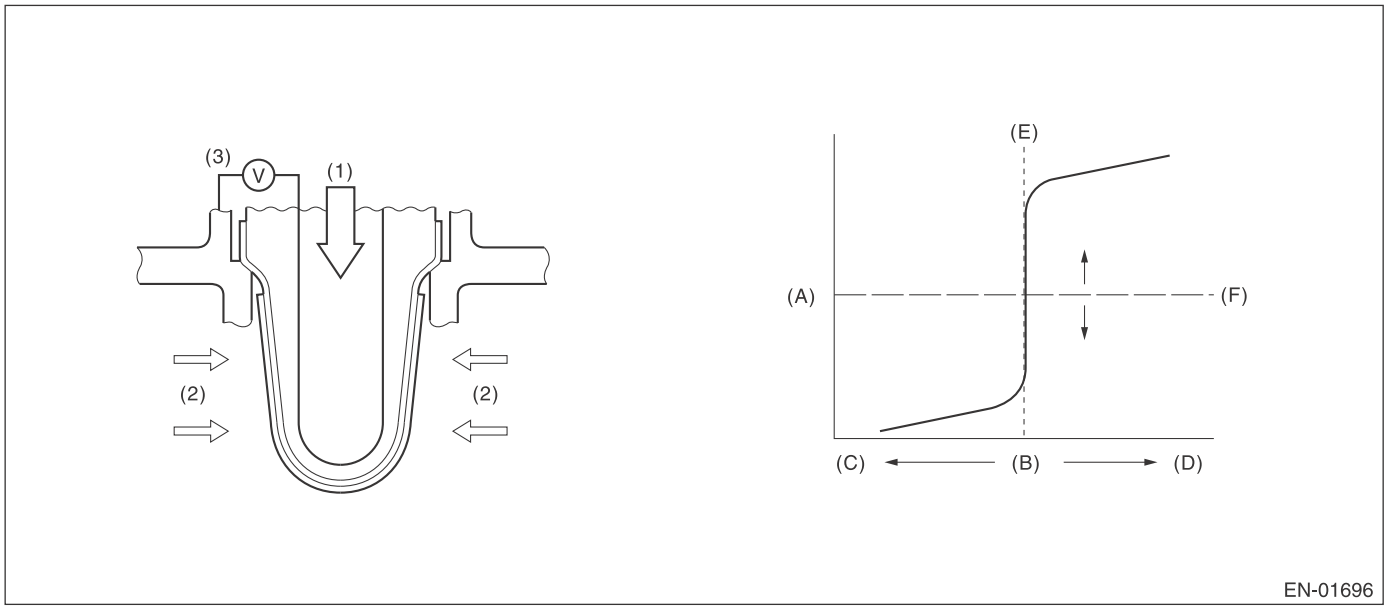

(A)	Electromotive force	(B)	Air fuel ratio	(C)	Rich
(D)	Lean	(E)	Theoretical air fuel ratio	(F)	Comparative voltage
(1)	Atmosphere	(2)	Exhaust gas	(3)	Electromotive force

3. ENABLE CONDITION (USED ONLY FOR MALFUNCTION JUDGMENT)

Secondary Parameters	Enable Conditions
Closed loop control at the rear oxygen sensor	In operation
Target output voltage of rear oxygen sensor	≥ 0.55 V + 0.05 V
Amount of intake air	≥ 10 g/s (0.35 oz/s)
Engine coolant temperature	≥ 75 °C (167 °F)
Misfire detection every 200 rotations	< 5 time(s)
Front oxygen (A/F) sensor compensation coefficient	Not in limit value
Battery voltage	≥ 10.9 V
Deceleration fuel cut of 5000 ms or more.	Experienced

4. GENERAL DRIVING CYCLE

Perform the diagnosis once after starting the engine.

5. DIAGNOSTIC METHOD

• Abnormality Judgment

If the duration of time while the following conditions are met is longer than the time indicated, judge as NG.

Judgment Value

Malfunction Criteria	Threshold Value
Minimum output voltage	> 0.15 V
or	
Maximum output voltage	< 0.55 V

Time Needed for Diagnosis: 200000 ms
Malfunction Indicator Light Illumination: Illuminates when malfunction occurs in 2 continuous driving cycles.

• Normality Judgment

Judge as OK and clear the NG if the following conditions are established.

Judgment Value

Malfunction Criteria	Threshold Value
Diagnosis of the rear oxygen sensor voltage low side	Incomplete
Minimum output voltage	≤ 0.15 V
Maximum output voltage	≥ 0.55 V

AJ:DTC P0141 O2 SENSOR HEATER CIRCUIT (BANK1 SENSOR2)

1. OUTLINE OF DIAGNOSIS

Detect the malfunction of rear oxygen sensor heater.
While observing the engine condition, judge as NG if the rear oxygen sensor impedance is great.

2. COMPONENT DESCRIPTION

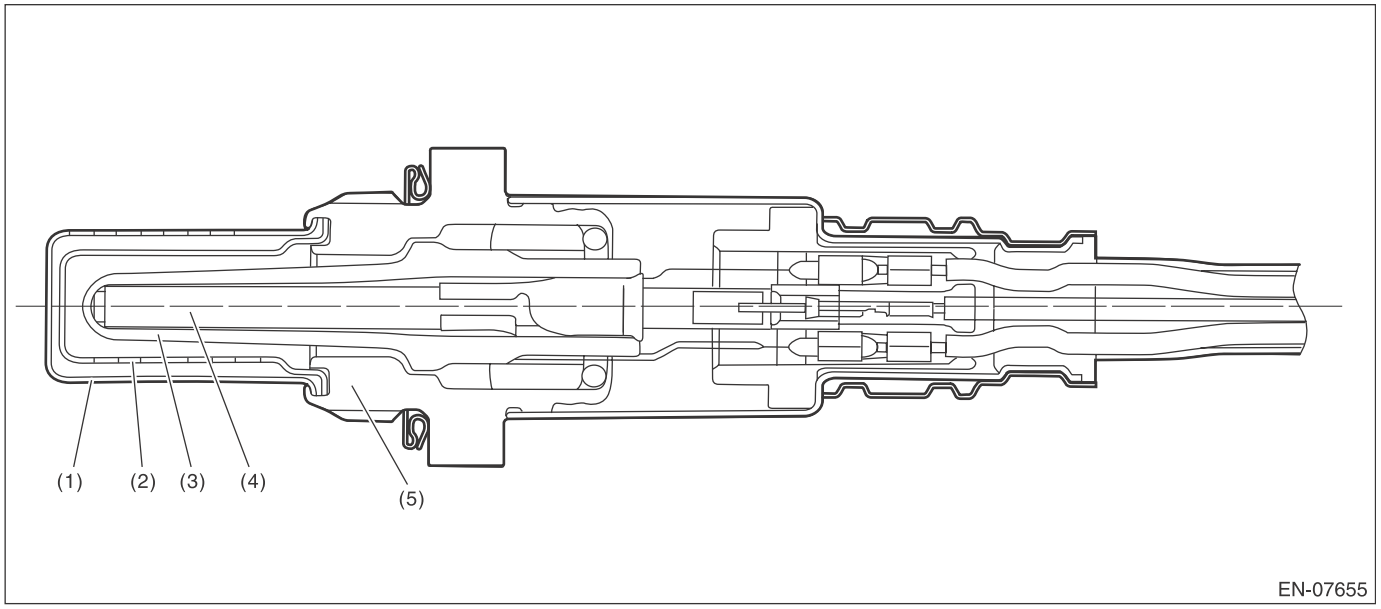

(1) Element cover (outer)
(2) Element cover (inner)
(3) Sensor element
(4) Ceramic heater
(5) Sensor housing

3. ENABLE CONDITIONS

Secondary Parameters	Enable Conditions
Battery voltage	≥ 10.9 V
Elapsed time after starting the engine	≥ 1000 ms
Engine coolant temperature	≥ 75 °C (167 °F)
A/F sensor element impedance	≤ 50 Ω
A/F sensor heater control duty	≤ 75 %
Rear oxygen sensor heater control duty	< 70 %

4. GENERAL DRIVING CYCLE

Perform the diagnosis continuously after 1000 ms seconds or more have passed since the engine started.

5. DIAGNOSTIC METHOD

• Abnormality Judgment

If the duration of time while the following conditions are met is longer than the time indicated, judge as NG.

Judgment Value

Malfunction Criteria	Threshold Value
Output terminal for heater characteristics fault detection	Low

Time Needed for Diagnosis: 4 ms × 2500 time (s)
Malfunction Indicator Light Illumination: Illuminates when malfunction occurs in 2 continuous driving cycles.

• Normality Judgment

Judge as OK and clear the NG if the continuous time while the following conditions are established is more than the predetermined time.

Judgment Value

Malfunction Criteria	Threshold Value
Output terminal for heater characteristics fault detection	High

Time Needed for Diagnosis: 4 ms × 2500 time (s)

AK:DTC P0171 SYSTEM TOO LEAN (BANK 1)

1. OUTLINE OF DIAGNOSIS

Detect fuel system malfunction by the amount of main feedback control.

Diagnostic method

Fuel system is diagnosed by comparing the target air fuel ratio calculated by ECM with the actual air fuel ratio measured by sensor.

2. ENABLE CONDITION

Secondary Parameters	Enable Conditions
A/F main learning system	In operation
Engine coolant temperature	≥ 75 °C (167 °F)
Engine load change	< 0.02 g/rev (0 oz/rev)
Engine load	≥ Value of Map 1

Map 1

Engine speed (rpm)	Idling	650	1000	1500	2000	2500	3000	3500	4000	4500
Measured value (g (oz)/rev)	na	0.208 (0.01)	0.201 (0.01)	0.185 (0.01)	0.183 (0.01)	0.193 (0.01)	0.206 (0.01)	0.206 (0.01)	0.225 (0.01)	0.245 (0.01)

3. GENERAL DRIVING CYCLE

Perform the diagnosis continuously at idling or at a constant speed after warming up the engine.

4. DIAGNOSTIC METHOD

• Abnormality Judgment

Compare the diagnosed value (fsobd) with the threshold value, and if a condition meeting the malfunction criteria below continues for 10 s × 5 time(s) or more, judge that there is a fault in the fuel system.

Judgment Value

Malfunction Criteria	Threshold Value
fsobd = (sglmd – tglmda) + faf + flaf In this case: sglmd = measured lambda tglmda = target lambda faf = Main feedback compensation coefficient (every 64 ms) flaf = main feedback learning compensation coefficient	≥ Value from Map 2

Map 2

Amount of air (g (oz)/s)	0 (0)	3.2 (0.11)	6.4 (0.23)	9.6 (0.34)	12.8 (0.45)	16 (0.56)	19.2 (0.68)
fsobdL1 (%)	1.4	1.4	1.332	1.25	1.25	1.25	1.25

Time Needed for Diagnosis: 10 s × 5 time(s)
Malfunction Indicator Light Illumination: Illuminates when malfunction occurs in 2 continuous driving cycles.

• Normality Judgment

Judge as OK and clear the NG if the continuous time while the following conditions are established is more than the predetermined time.

Judgment Value

Malfunction Criteria	Threshold Value
fsobd = (sglmd – tglmda) + faf + flaf	< 1.2

Time Needed for Diagnosis: 10 s

AL:DTC P0172 SYSTEM TOO RICH (BANK 1)

1. OUTLINE OF DIAGNOSIS

Detect fuel system malfunction by the amount of main feedback control.

Diagnostic method

Fuel system is diagnosed by comparing the target air fuel ratio calculated by ECM with the actual air fuel ratio measured by sensor.

2. ENABLE CONDITION

Secondary Parameters	Enable Conditions
A/F main learning system	In operation
Engine coolant temperature	≥ 75 °C (167 °F)
Engine load change	≤ 0.02 g/rev (0 oz/rev)
Learning value of EVAP conc.	< 0.15
Cumulative time of canister purge after engine start	≥ 20 s
Continuous period after canister purge starting	≥ 29884 ms
Engine load	≥ Value of Map 1

Map 1

Engine speed (rpm)	Idling	650	1000	1500	2000	2500	3000	3500	4000	4500
Measured value (g (oz)/rev)	na	0.208 (0.01)	0.201 (0.01)	0.185 (0.01)	0.183 (0.01)	0.193 (0.01)	0.206 (0.01)	0.206 (0.01)	0.225 (0.01)	0.245 (0.01)

3. GENERAL DRIVING CYCLE

Perform the diagnosis continuously at idling or at a constant speed after warming up the engine.

4. DIAGNOSTIC METHOD

• Abnormality Judgment

Compare the diagnosed value (fsobd) with the threshold value, and if a condition meeting the malfunction criteria below continues for 10 s × 5 time(s) or more, judge that there is a fault in the fuel system.

Judgment Value

Malfunction Criteria	Threshold Value
fsobd = (sglmd – tglmda) + faf + flaf In this case: sglmd = measured lambda tglmda = target lambda faf = Main feedback compensation coefficient (every 64 ms) flaf = main feedback learning compensation coefficient	< Value of Map 2

Map 2

Amount of air (g (oz)/s)	0 (0)	3.2 (0.11)	6.4 (0.23)	9.6 (0.34)	12.8 (0.45)	16 (0.56)	19.2 (0.68)
fsobdL1 (%)	0.6	0.6	0.668	0.735	0.735	0.735	0.735

Time Needed for Diagnosis: 10 s × 5 time(s)
Malfunction Indicator Light Illumination: Illuminates when malfunction occurs in 2 continuous driving cycles.

• Normality Judgment

Judge as OK when the malfunction criteria below are met for 10 seconds.

Judgment Value

Malfunction Criteria	Threshold Value
fsobd = (sglmd – tglmda) + faf + flaf	≥ 0.8

Time Needed for Diagnosis: 10 s

AM:DTC P0181 FUEL TEMPERATURE SENSOR “A” CIRCUIT RANGE/PERFORMANCE

1. OUTLINE OF DIAGNOSIS

Detect faults in the fuel temperature sensor output properties.
Diagnosis is performed in two methods (drift diagnosis and stuck diagnosis). If either is NG, judge as NG. If both are OK, Judge as OK and clear the NG.

Drift Diagnosis

Normally fuel temperature is lower than engine coolant temperature. When the fuel temperature becomes higher than the engine coolant temperature, the range is considered to be shifted, and judged as NG.

Stuck Diagnosis

As the engine warms up (cumulative amount of intake air after starting is large), if the fuel temperature which should rise does not, determine as being stuck and NG.

2. COMPONENT DESCRIPTION

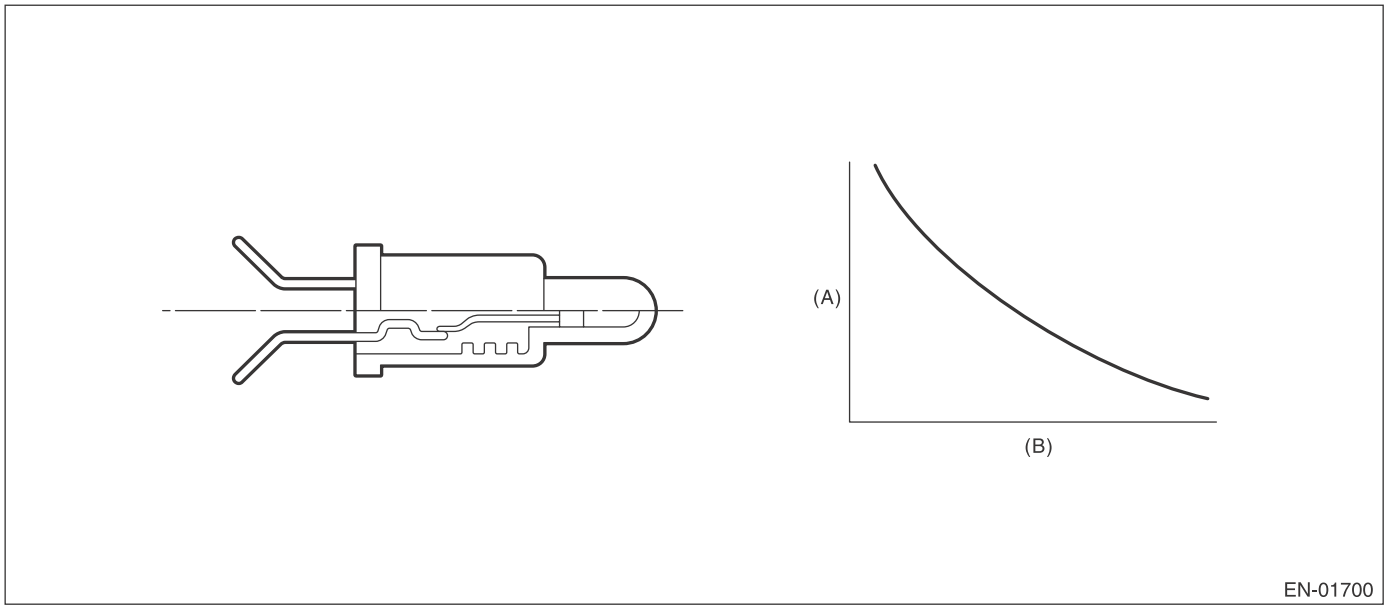

(A) Resistance value (Ω) (B) Fuel temperature °C (°F)

3. ENABLE CONDITION

DRIFT DIAGNOSIS

Secondary Parameters	Enable Conditions
None	

4. GENERAL DRIVING CYCLE

Always perform the diagnosis continuously.

5. DIAGNOSTIC METHOD

• Abnormality Judgment

If the duration of time while the following conditions are met is longer than the time indicated, judge as NG.

Judgment Value

Malfunction Criteria	Threshold Value
Fuel level	≥ 9.6 ℓ (2.54 US gal, 2.11 Imp gal)
Elapsed time after starting the engine	≥ 20 s
Engine coolant temperature – Engine coolant temperature at engine start	> 10 °C (50 °F)
Fuel temperature – Engine coolant temperature	≥ 10 °C (50 °F)
Battery voltage	≥ 10.9 V

Time Needed for Diagnosis: 120 s
Malfunction Indicator Light Illumination: Illuminates when malfunction occurs in 2 continuous driving cycles.

• Normality Judgment

Judge as OK and clear the NG if the continuous time while the following conditions are established is more than the predetermined time.

Judgment Value

Malfunction Criteria	Threshold Value
Fuel level	≥ 9.6 ℓ (2.54 US gal, 2.11 Imp gal)
Elapsed time after starting the engine	≥ 20 s
Engine coolant temperature – Engine coolant temperature at engine start	> 10 °C (50 °F)
Fuel temperature – Engine coolant temperature	< 10 °C (50 °F)
Battery voltage	≥ 10.9 V
Engine coolant temperature	< 75 °C (167 °F)

Time Needed for Diagnosis: Less than 1 second

6. ENABLE CONDITION

Stuck Diagnosis

Secondary Parameters	Enable Conditions
Elapsed time after starting the engine	≥ 20000 ms
Battery voltage	≥ 10.9 V

7. GENERAL DRIVING CYCLE

Perform the diagnosis continuously 20 seconds after starting engine.

8. DIAGNOSTIC METHOD

- **Abnormality Judgment**

Judge as NG when the following conditions are established.

Judgment Value

Malfunction Criteria	Threshold Value
Accumulated amount of intake air	≥ 551043 g (19435.29 oz)
Fuel temperature difference between Max. and Min.	< 2 °C (35.6 °F)

Time Needed for Diagnosis: Less than 1 second
Malfunction Indicator Light Illumination: Illuminates when malfunction occurs in 2 continuous driving cycles.

- **Normality Judgment**

Judge as OK and clear the NG if the following conditions are established.

Judgment Value

Malfunction Criteria	Threshold Value
Fuel temperature difference between Max. and Min.	≥ 2 °C (35.6 °F)

Time Needed for Diagnosis: Less than 1 second

AN:DTC P0182 FUEL TEMPERATURE SENSOR “A” CIRCUIT LOW INPUT

1. OUTLINE OF DIAGNOSIS

Detect the open or short circuit of fuel temperature sensor.
Judge as NG if out of specification.

2. COMPONENT DESCRIPTION

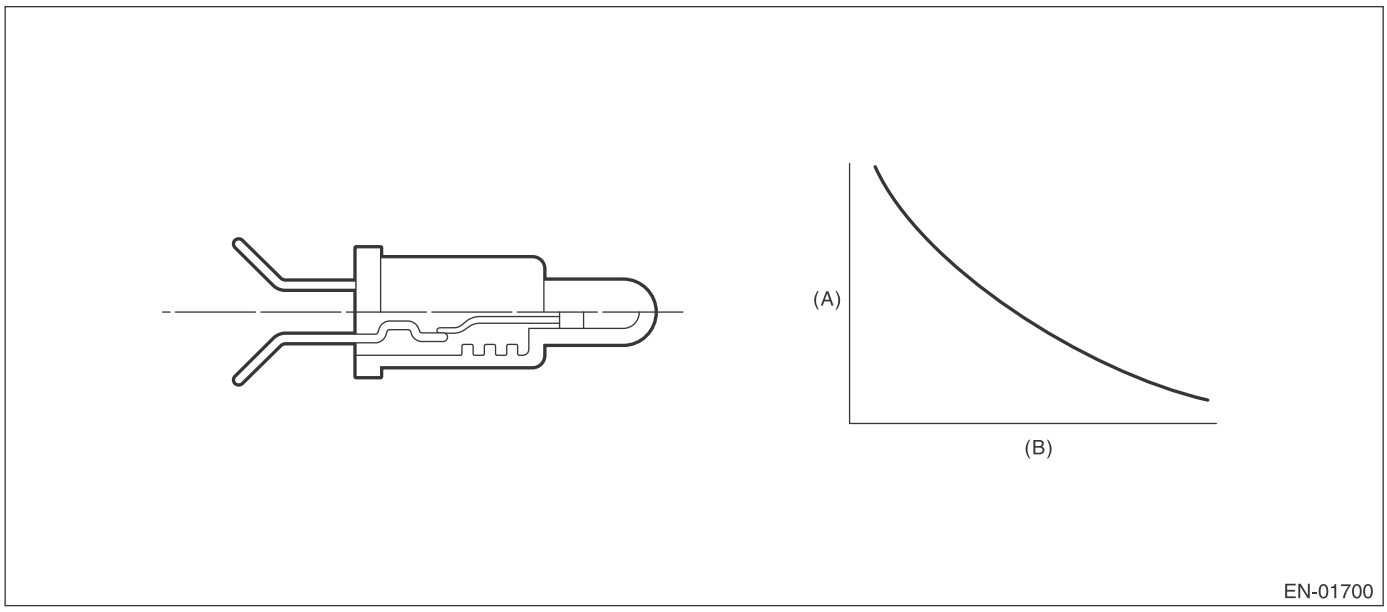

(A) Resistance value (Ω) (B) Fuel temperature °C (°F)

3. ENABLE CONDITION

Secondary Parameters	Enable Conditions
None	

4. GENERAL DRIVING CYCLE

Always perform the diagnosis continuously.

5. DIAGNOSTIC METHOD

- **Abnormality Judgment**

If the duration of time while the following conditions are met is longer than the time indicated, judge as NG.

Judgment Value

Malfunction Criteria	Threshold Value
Output voltage	< 0.573 V
Battery voltage	≥ 10.9 V

Time Needed for Diagnosis: 2500 ms
Malfunction Indicator Light Illumination: Illuminates as soon as a malfunction occurs.

- **Normality Judgment**

Judge as OK and clear the NG if the continuous time while the following conditions are established is more than the predetermined time.

Judgment Value

Malfunction Criteria	Threshold Value
Output voltage	≥ 0.573 V
Battery voltage	≥ 10.9 V

Time Needed for Diagnosis: Less than 1 second

AO:DTC P0183 FUEL TEMPERATURE SENSOR “A” CIRCUIT HIGH INPUT

1. OUTLINE OF DIAGNOSIS

Detect the open or short circuit of fuel temperature sensor.
Judge as NG if out of specification.

2. COMPONENT DESCRIPTION

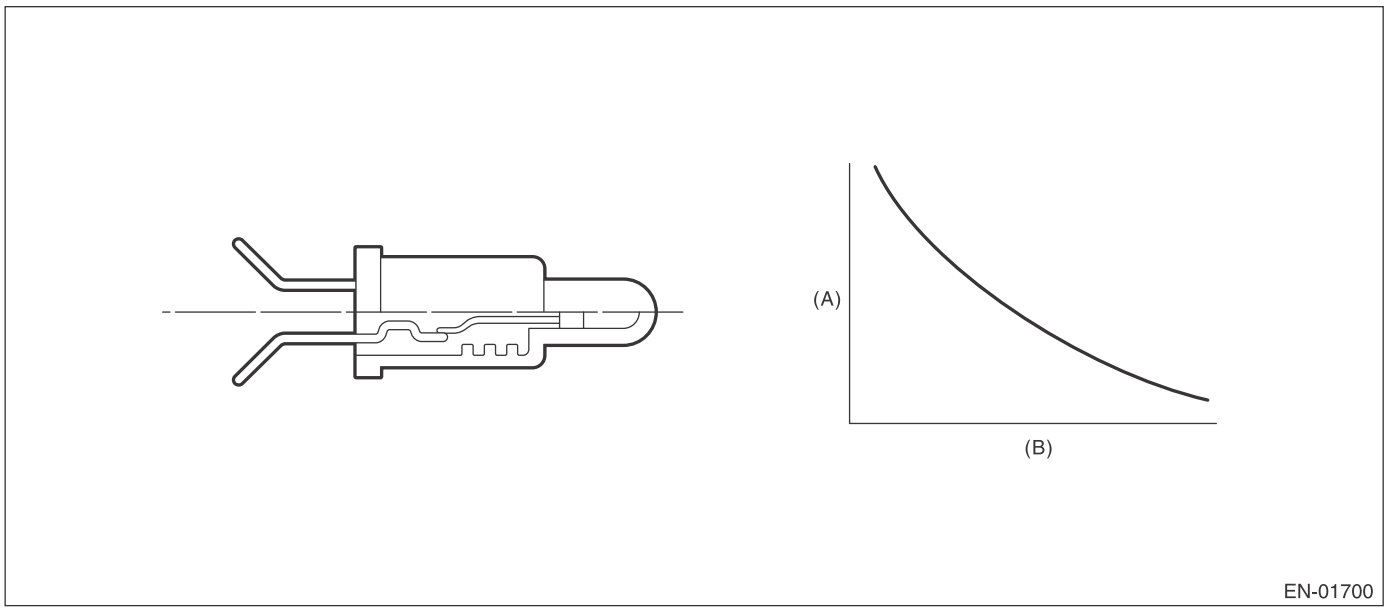

(A) Resistance value (Ω) (B) Fuel temperature °C (°F)

3. ENABLE CONDITION

Secondary Parameters	Enable Conditions
None	

4. GENERAL DRIVING CYCLE

Always perform the diagnosis continuously.

5. DIAGNOSTIC METHOD

- **Abnormality Judgment**

If the duration of time while the following conditions are met is longer than the time indicated, judge as NG.

Judgment Value

Malfunction Criteria	Threshold Value
Output voltage	≥ 4.716 V
Battery voltage	≥ 10.9 V

Time Needed for Diagnosis: 2500 ms
Malfunction Indicator Light Illumination: Illuminates as soon as a malfunction occurs.

- **Normality Judgment**

Judge as OK and clear the NG if the continuous time while the following conditions are established is more than the predetermined time.

Judgment Value

Malfunction Criteria	Threshold Value
Output voltage	< 4.716 V
Battery voltage	≥ 10.9 V

Time Needed for Diagnosis: Less than 1 second

AP:DTC P0196 ENGINE OIL TEMPERATURE SENSOR CIRCUIT RANGE/PERFORMANCE

1. OUTLINE OF DIAGNOSIS

Detect for abnormal values in the oil temperature sensor output properties.
Judge as NG when the oil temperature does not rise even though the engine is running under a condition where it should rise.

2. ENABLE CONDITION

Secondary Parameters	Enable Conditions
Battery voltage	≥ 10.9 V
Engine speed	≥ Value from Map

Map

Engine coolant temperature °C (°F)	–40 (–40)	–30 (–22)	–20 (–4)	–10 (14)	0 (32)	10 (50)	20 (68)	30 (86)
Engine speed rpm	500	500	500	500	500	500	500	500

Engine coolant temperature °C (°F)	40 (104)	50 (122)	60 (140)	70 (158)	80 (176)	90 (194)	100 (212)	110 (230)
Engine speed rpm	500	500	500	500	500	500	500	500

3. GENERAL DRIVING CYCLE

Perform the diagnosis continuously after starting the engine.

4. DIAGNOSTIC METHOD

• Abnormality Judgment

Judge as NG when the following conditions are established.

Judgment Value

Malfunction Criteria	Threshold Value
Engine oil temperature After engine start oil temperature sensor characteristic diagnosis timer.	< 15 °C (59 °F) ≥ Judgment value for after engine start oil temperature sensor characteristic diagnosis timer

After engine start oil temperature sensor characteristic diagnosis timer (timer for diagnosis).
a. Timer stop at fuel cut
b. During the driving conditions except a) above, timer counts up as follows.
64 ms + TOILCNT ms (at 64 ms)
Where, TOILCNT is determined as follows,
TOILCNT = 0 at idle switch ON
For TOILCNT at Idle switch off, refer to the following table.

		Vehicle speed km/h (MPH)							
		0 (0)	8 (5)	16 (9.9)	24 (14.9)	32 (19.9)	40 (24.9)	48 (29.8)	56 (34.8)
Temperature °C (°F)	–30 (–22)	64 ms	73.2 ms	83.9 ms	96.3 ms	113.2 ms	133.9 ms	160.2 ms	194.6 ms
	–20 (–4)	64 ms	73.3 ms	84 ms	96.6 ms	113.7 ms	135 ms	162 ms	197.4 ms
	–10 (14)	64 ms	73.4 ms	84.2 ms	96.9 ms	114.5 ms	136.4 ms	164.4 ms	201.5 ms
	0 (32)	64 ms	73.5 ms	84.5 ms	97.4 ms	115.6 ms	138.5 ms	168 ms	207.6 ms
	10 (50)	102.2 ms	114.8 ms	129.4 ms	146.7 ms	171.7 ms	203.4 ms	245.1 ms	302.1 ms

After engine start oil temperature characteristic diagnosis timer judgment value (t).
$t = 1882940 \text{ ms} - 43302 \text{ ms} \times Ti$ ($t \geq 2400000$)
Ti = The lowest coolant temperature after starting the engine.
Time Needed for Diagnosis: Less than 1 second
Malfunction Indicator Light Illumination: Illuminates when malfunction occurs in 2 continuous driving cycles.

• Normality Judgment

Judge as OK and clear the NG if the following conditions are established.

Judgment Value

Malfunction Criteria	Threshold Value
Engine oil temperature	≥ 15 °C (59 °F)

Time Needed for Diagnosis: Less than 1 second

AQ:DTC P0197 ENGINE OIL TEMPERATURE SENSOR LOW

1. OUTLINE OF DIAGNOSIS

Detect the open or short circuit of the oil temperature sensor.
Judge as NG when outside of the judgment value.

2. ENABLE CONDITION

Secondary Parameters	Enable Conditions
None	

3. GENERAL DRIVING CYCLE

Always perform the diagnosis continuously.

4. DIAGNOSTIC METHOD

- **Abnormality Judgment**

If the duration of time while the following conditions are met is longer than the time indicated, judge as NG.

Judgment Value

Malfunction Criteria	Threshold Value
Output voltage	< 0.166 V

Time Needed for Diagnosis: 500 ms
Malfunction Indicator Light Illumination: Illuminates as soon as a malfunction occurs.

- **Normality Judgment**

Judge as OK and clear the NG if the continuous time while the following conditions are established is more than the predetermined time.

Judgment Value

Malfunction Criteria	Threshold Value
Output voltage	≥ 0.166 V

Time Needed for Diagnosis: Less than 1 second

AR:DTC P0198 ENGINE OIL TEMPERATURE SENSOR HIGH

1. OUTLINE OF DIAGNOSIS

Detect the open or short circuit of the oil temperature sensor.
Judge as NG when outside of the judgment value.

2. ENABLE CONDITION

Secondary Parameters	Enable Conditions
None	

3. GENERAL DRIVING CYCLE

Always perform the diagnosis continuously.

4. DIAGNOSTIC METHOD

- **Abnormality Judgment**

If the duration of time while the following conditions are met is longer than the time indicated, judge as NG.

Judgment Value

Malfunction Criteria	Threshold Value
Output voltage	≥ 4.716 V

Time Needed for Diagnosis: 500 ms
Malfunction Indicator Light Illumination: Illuminates as soon as a malfunction occurs.

- **Normality Judgment**

Judge as OK and clear the NG if the continuous time while the following conditions are established is more than the predetermined time.

Judgment Value

Malfunction Criteria	Threshold Value
Output voltage	< 4.716 V

Time Needed for Diagnosis: Less than 1 second

AS:DTC P0222 THROTTLE/PEDAL POSITION SENSOR/SWITCH “B” CIRCUIT LOW

1. OUTLINE OF DIAGNOSIS

Detect the open or short circuit of throttle position sensor 2.
Judge as NG if out of specification.

2. COMPONENT DESCRIPTION

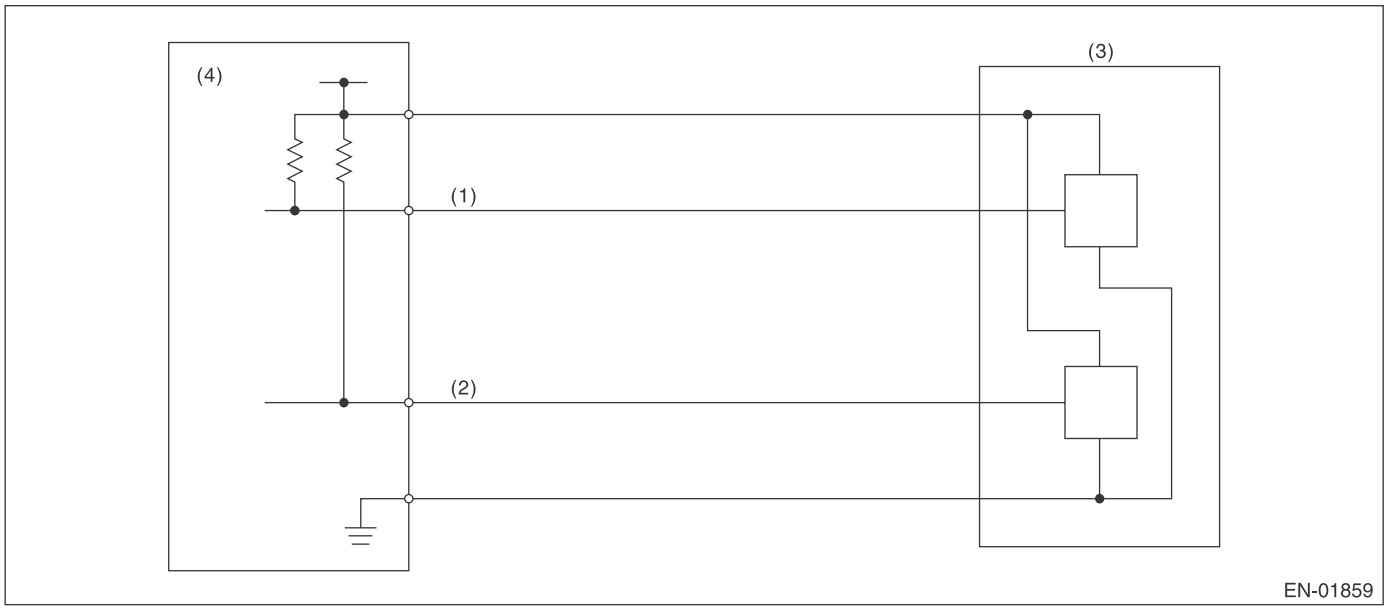

(1) Throttle position sensor 1 signal
(2) Throttle position sensor 2 signal
(3) Throttle position sensor
(4) Engine control module (ECM)

3. ENABLE CONDITION

Secondary Parameters	Enable Conditions
Ignition switch	ON
Battery voltage	≥ 6 V

4. GENERAL DRIVING CYCLE

Always perform the diagnosis continuously.

5. DIAGNOSTIC METHOD

• Abnormality Judgment

If the duration of time while the following conditions are met is longer than the time indicated, judge as NG.

Judgment Value

Malfunction Criteria	Threshold Value
Sensor 2 input voltage	≤ 0.926 V

Time Needed for Diagnosis: 24 ms
Malfunction Indicator Light Illumination: Illuminates as soon as a malfunction occurs.

• Normality Judgment

Judge as OK and clear the NG if the continuous time while the following conditions are established is more than the predetermined time.

Judgment Value

Malfunction Criteria	Threshold Value
Sensor 2 input voltage	> 0.926 V

Time Needed for Diagnosis: 24 ms

AT:DTC P0223 THROTTLE/PEDAL POSITION SENSOR/SWITCH “B” CIRCUIT HIGH

1. OUTLINE OF DIAGNOSIS

Detect the open or short circuit of throttle position sensor 2.
Judge as NG if out of specification.

2. COMPONENT DESCRIPTION

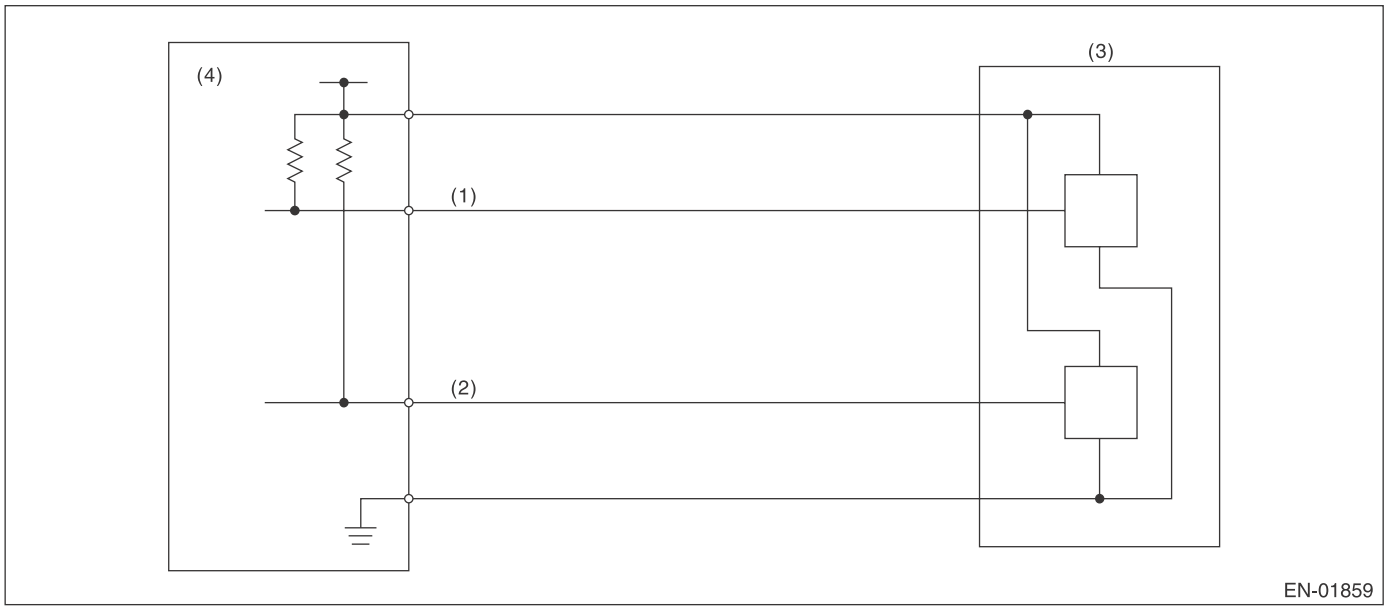

(1) Throttle position sensor 1 signal
(2) Throttle position sensor 2 signal
(3) Throttle position sensor
(4) Engine control module (ECM)

3. ENABLE CONDITION

Secondary Parameters	Enable Conditions
Ignition switch	ON
Battery voltage	≥ 6 V

4. GENERAL DRIVING CYCLE

Always perform the diagnosis continuously.

5. DIAGNOSTIC METHOD

• Abnormality Judgment

If the duration of time while the following conditions are met is longer than the time indicated, judge as NG.

Judgment Value

Malfunction Criteria	Threshold Value
Sensor 2 input voltage	≥ 4.858 V

Time Needed for Diagnosis: 24 ms
Malfunction Indicator Light Illumination: Illuminates as soon as a malfunction occurs.

• Normality Judgment

Judge as OK and clear the NG if the continuous time while the following conditions are established is more than the predetermined time.

Judgment Value

Malfunction Criteria	Threshold Value
Sensor 2 input voltage	< 4.858 V

Time Needed for Diagnosis: 24 ms

AU:DTC P0301 CYLINDER 1 MISFIRE DETECTED

1. OUTLINE OF DIAGNOSIS

Detect the presence of misfire occurrence. (Revolution fluctuation method)
Monitoring Misfire which influences exhaust deterioration (1.5 times of FTP) and catalyst damage is made obligatory by the law. Misfire affecting these two has two patterns below. :

- Intermittent misfire (The same cylinder misfires in random, or different cylinders misfire in random.) : FTP 1.5 times misfire
- Every time misfire (The same cylinder misfires every time.) : FTP 1.5 times misfire, Catalyst damage misfire

The following detecting methods are adopted for these detection.
1) Intermittent misfire: FTP 1.5 times misfire

- 180° Interval Difference Method (MT: 1,800 rpm or less; AT: None)
- 360° Interval Difference Method (whole range)
- 720° Interval Difference Method (3,000 rpm or more)

2) Misfire every time: FTP 1.5 times misfire, Catalyst damage misfire

- 360° Interval Difference Method

2. ENABLE CONDITION

Secondary Parameters	Enable Conditions
All secondary parameters enable conditions	≥ 1024 ms
Intake manifold pressure change at 180° CA	< Value of Map 1
Throttle position variation for 16 ms	< 21 °
Fuel shut-off function	Not in operation
Fuel level	≥ 9.6 ℓ (2.54 US gal, 2.11 Imp gal)
Vehicle dynamic control or AT torque control	Not in operation
Evaporative system leak check	Not in operation
Engine speed	500 rpm — 6300 rpm
Intake manifold pressure	≥ Value from Map 2
Battery voltage	≥ 8 V
Fuel parameter determination	Not extremely low volatility
Elapsed time after starting the engine	≥ 0 ms
Engine speed variation for 32 ms	< 1000 rpm

Map 1

- AT model

rpm	700	1000	1500	2000	2500	3000	3500	4000	4500	5000	5500	6000	6300
kPa (mmHg, inHg)	13.3 (100, 3.9)	13.3 (100, 3.9)	13.3 (100, 3.9)	13.3 (100, 3.9)	13.3 (100, 3.9)	13.3 (100, 3.9)	13.3 (100, 3.9)	13.3 (100, 3.9)	13.3 (100, 3.9)	13.3 (100, 3.9)	13.3 (100, 3.9)	13.3 (100, 3.9)	13.3 (100, 3.9)

- MT model

rpm	650	1000	1500	2000	2500	3000	3500	4000	4500	5000	5500	6000	6300
kPa (mmHg, inHg)	13.3 (100, 3.9)	13.3 (100, 3.9)	13.3 (100, 3.9)	13.3 (100, 3.9)	13.3 (100, 3.9)	13.3 (100, 3.9)	13.3 (100, 3.9)	13.3 (100, 3.9)	13.3 (100, 3.9)	13.3 (100, 3.9)	13.3 (100, 3.9)	13.3 (100, 3.9)	13.3 (100, 3.9)

Map 2

- AT model

rpm	700	1000	1500	2000	2500	3000	3500	4000	4500	5000	5500	6000	6300
kPa (mmHg, inHg)	27.6 (207.0, 8.1)	25.6 (192.0, 7.6)	22.9 (172.0, 6.8)	23.2 (174.0, 6.9)	23.9 (179.0, 7)	23.6 (177.0, 7)	26.8 (201.0, 7.9)	29.7 (223.0, 8.8)	32.3 (242.0, 9.5)	34.1 (256.0, 10.1)	36 (270.0, 10.6)	37.9 (284.0, 11.2)	40 (300.0, 11.8)

- MT model

Vehicle speed < 64 km/h (39.8 MPH)

rpm	650	1000	1500	2000	2500	3000	3500	4000	4500	5000	5500	6000	6300
kPa (mmHg, inHg)	24.5 (184, 7.2)	22.7 (170.3, 6.7)	21.4 (160.2, 6.3)	21.5 (161.6, 6.4)	21.5 (161.4, 6.4)	23.2 (174.4, 6.9)	24.7 (185.5, 7.3)	25.8 (193.3, 7.6)	27.1 (203.2, 8)	28.8 (216.3, 8.5)	32.3 (242.2, 9.5)	36.3 (272, 10.7)	37.9 (284.5, 11.2)

Vehicle speed ≥ 68 km/h (42.3 MPH)

rpm	650	1000	1500	2000	2500	3000	3500	4000	4500	5000	5500	6000	6300
kPa (mmHg, inHg)	31.6 (237, 9.3)	31.6 (237, 9.3)	31.6 (237, 9.3)	31.1 (233, 9.2)	31.3 (235, 9.3)	33.1 (248, 9.8)	33.9 (254, 10)	28.8 (216, 8.5)	30.1 (226, 8.9)	33.3 (250, 9.8)	36.9 (277, 10.9)	40.1 (301, 11.9)	43.2 (324, 12.8)

3. GENERAL DRIVING CYCLE

- If conditions are met, it is possible to detect the misfires from idling to high engine speed. However, to avoid excessive load or harm to the engine, perform diagnosis at idle.
- Perform the diagnosis continuously.

4. DIAGNOSTIC METHOD

When a misfire occurs, the engine speed will decreased and the crankshaft position speed will change. Calculate the interval difference value (diagnostic value) from crankshaft position speed by the following formula, and judge whether a misfire is occurring or not comparing the calculated result with judgment value. Counting the number of misfires. If the misfire ratio is higher during 1000 revs. or 200 revs., Judge corresponding cylinders as NG.

Diagnostic value calculation (Calculate from angle speed) →	Misfire detection every single ignition (Compare diagnostic value with judgment value) →	NG judgment (Misfire occurrence judgment required by the law) (Compare number of misfire with judgment)
	• 180° Interval Difference Method • 360° Interval Difference Method • 720° Interval Difference Method	• FTP 1.5 times misfire NG judgment • Catalyst damage misfire NG judgment

As shown in the following figure, pick a cylinder as the standard and name it omg 0. And the former crankshaft position speed is named omg 1, the second former crankshaft position speed is named omg 2, the third is named omg 3, etc.

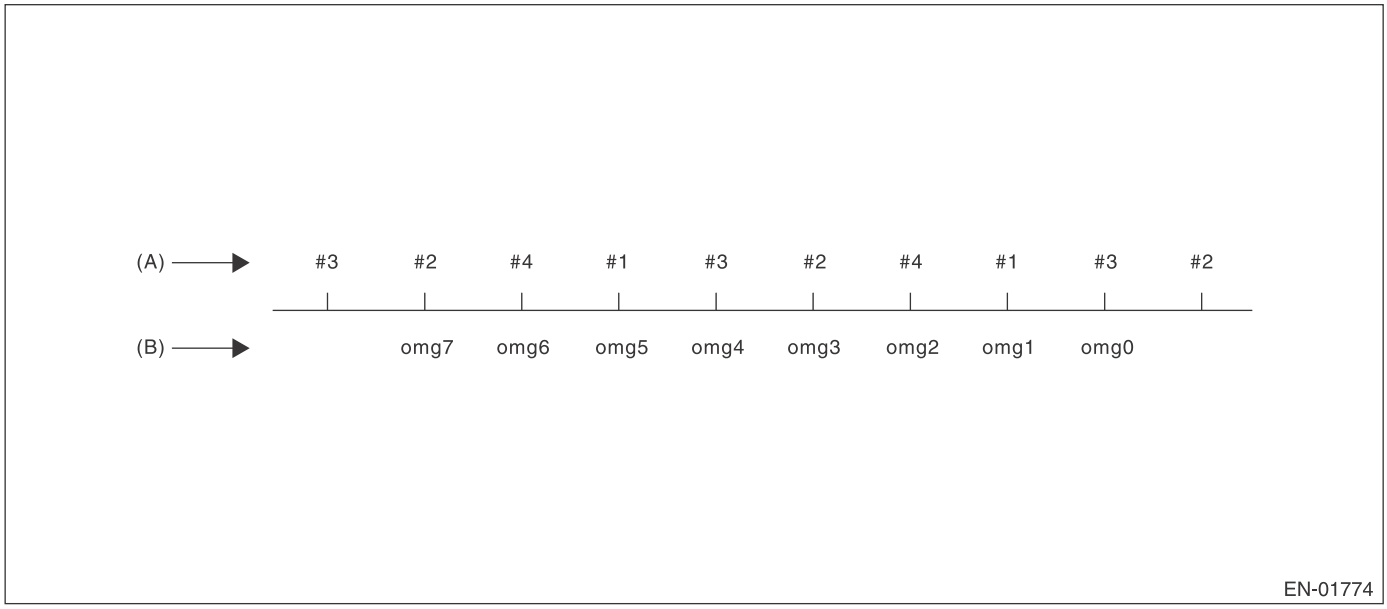

(A) Ignition order (B) Crankshaft position speed

180° Interval Difference Method

Diagnostic value	domg 180 = (omg 1 – omg 0) – (omg 5 – omg 1)/4
Judge as a misfire in the following cases. • domg 180 > judgment value of positive side • domg 180 ≤ judgment value of negative side (Judgment value before 180° CA)	

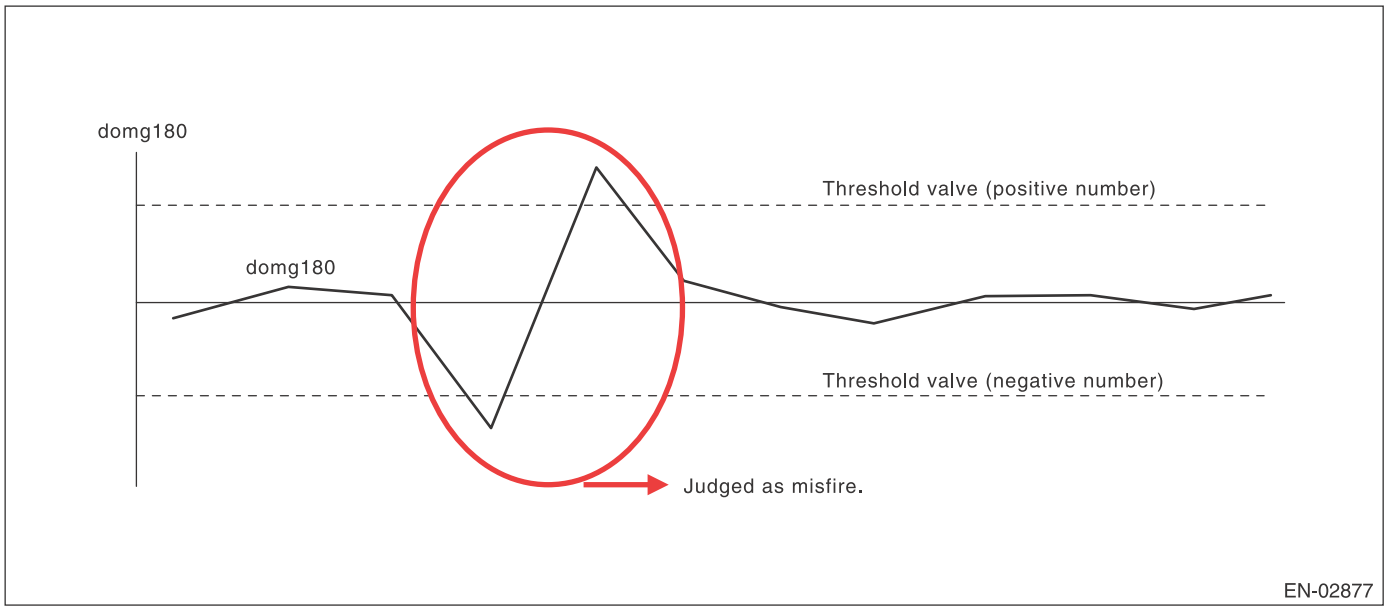

360° Interval Difference Method

Diagnostic value	domg 360 = (omg 1 – omg 0) – (omg 3 – omg 2)
Misfire judgment	domg 360 > Judgment value → Judge as misfire

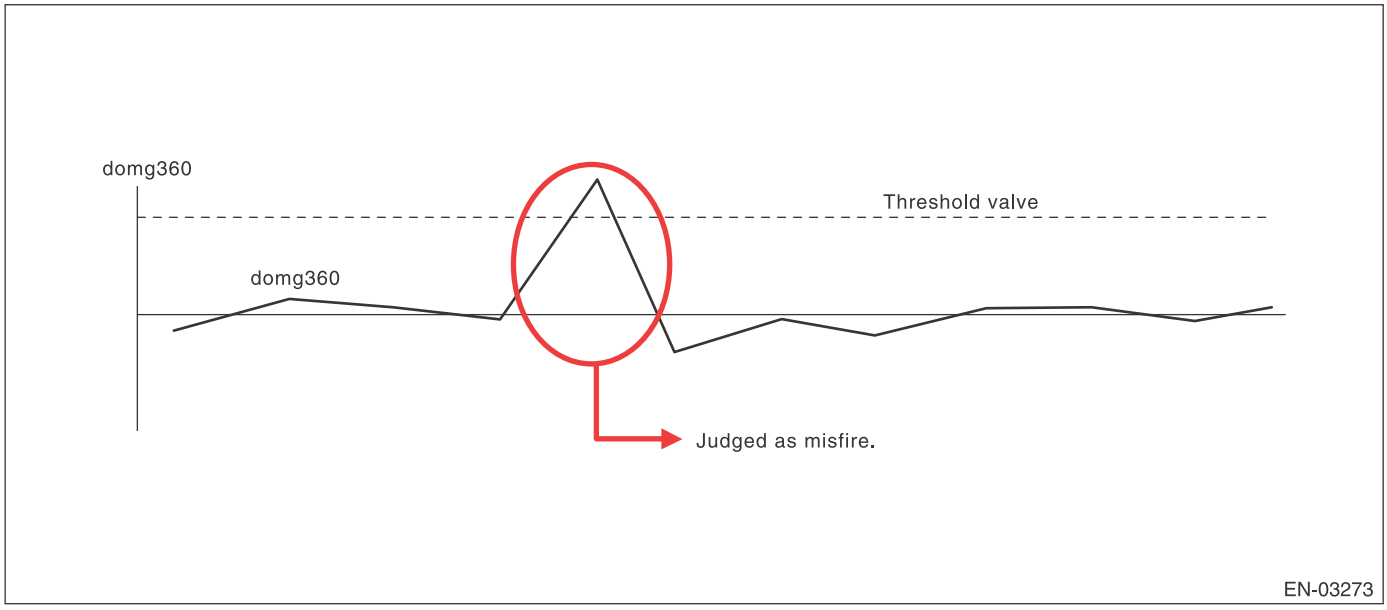

720° Interval Difference Method

Diagnostic value	domg 720 = (omg 1 – omg 0) – (omg 5 – omg 4)
Misfire judgment	domg 720 > Judgment value → Judge as misfire

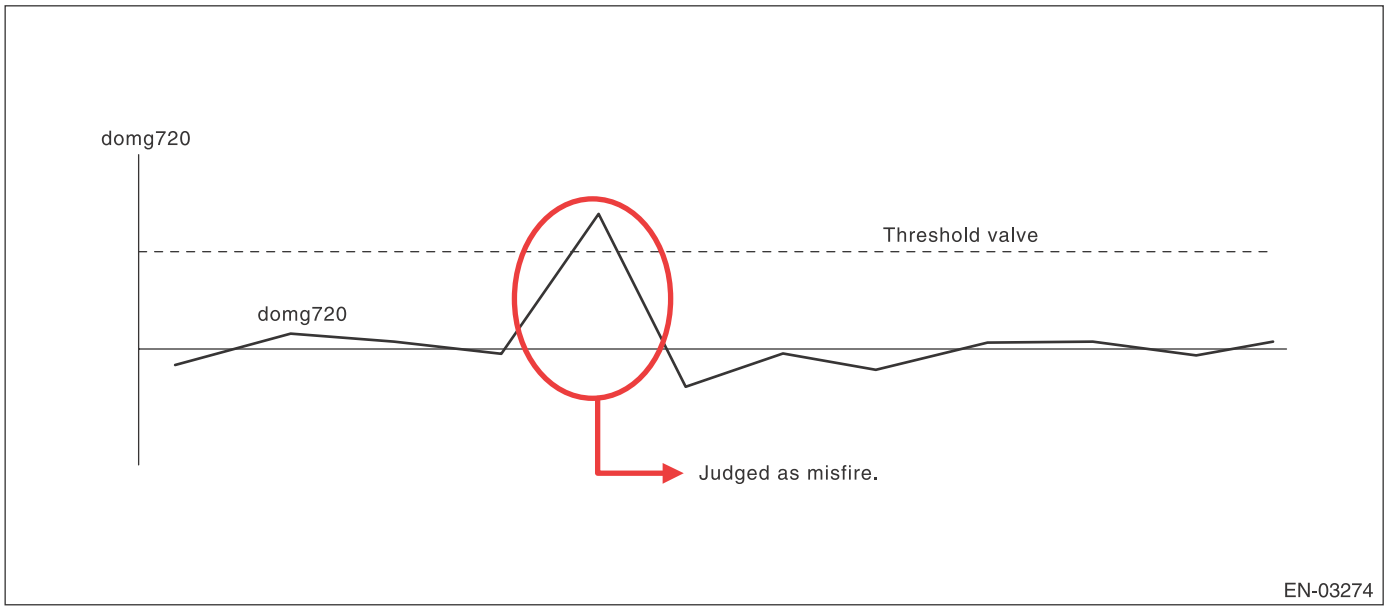

- **FTP 1.5 times misfire (Misfire occurrence level which influences exhaust gas)**
- **Abnormality Judgment**

Judgment Value (Judge that malfunction occurs when the misfire ratio is high in 1000 engine revs.)

Malfunction Criteria	Threshold Value
FTP emission judgment value	≥ 18 × 100/2000% in 1000 revs. (PZEV AT model) ≥ 30 × 100/2000% in 1000 revs. (AT model except for PZEV) ≥ 20 × 100/2000% in 1000 revs. (MT model)

Time Needed for Diagnosis: 1000 engine revs.
Malfunction Indicator Light Illumination: Illuminates when malfunction occurs in 2 continuous driving cycles.

- **Normality Judgment**

Judgment Value

Malfunction Criteria	Threshold Value
FTP emission judgment value	< 18 × 100/2000% in 1000 revs. (PZEV AT model) < 30 × 100/2000% in 1000 revs. (AT model except for PZEV) < 20 × 100/2000% in 1000 revs. (MT model)

Time Needed for Diagnosis: 1000 engine revs.

- **Catalyst damage misfire (Misfire occurrence level damaging catalyst)**
- **Abnormality Judgment**

Judgment Value

Malfunction Criteria	Threshold Value
Catalyst damage misfire judgment value	≥ Value of Map 3

Map 3

		Intake air (g(oz)/rev)							
		0.16 (0.01)	0.28 (0.01)	0.4 (0.01)	0.52 (0.02)	0.64 (0.02)	0.76 (0.03)	0.92 (0.03)	1.1 (0.04)
Engine speed (rpm)	700	100	100	100	100	90	80	64	48
	1000	100	100	100	100	90	80	63	44
	1500	100	100	90	80	73	67	54	40
	2000	80	80	80	80	68	57	51	44
	2500	80	80	73	67	62	57	51	44
	3000	67	67	62	57	51	44	44	44
	3500	67	67	56	44	40	36	34	31
	4000	57	57	44	31	24	20	20	20
	4500	44	44	33	31	20	20	20	20
	5000	44	44	38	31	20	20	20	20
	5500	36	36	31	27	20	20	20	20
	6000	20	20	20	20	20	20	20	20
	6300	20	20	20	20	20	20	20	20

Time Needed for Diagnosis: 200 engine revs.
Malfunction Indicator Light Illumination: Illuminates as soon as a malfunction occurs.

- **Normality Judgment**

Judgment Value

Malfunction Criteria	Threshold Value
Catalyst damage misfire judgment value	< Value of Map 3

Time Needed for Diagnosis: 200 engine revs.

AV:DTC P0302 CYLINDER 2 MISFIRE DETECTED

1. OUTLINE OF DIAGNOSIS

NOTE:
For the detection standard, refer to DTC P0301. <Ref. to GD(H4SO)-82, DTC P0301 CYLINDER 1 MISFIRE DETECTED, Diagnostic Trouble Code (DTC) Detecting Criteria.>

AW:DTC P0303 CYLINDER 3 MISFIRE DETECTED

1. OUTLINE OF DIAGNOSIS

NOTE:
For the detection standard, refer to DTC P0301. <Ref. to GD(H4SO)-82, DTC P0301 CYLINDER 1 MISFIRE DETECTED, Diagnostic Trouble Code (DTC) Detecting Criteria.>

AX:DTC P0304 CYLINDER 4 MISFIRE DETECTED

1. OUTLINE OF DIAGNOSIS

NOTE:
For the detection standard, refer to DTC P0301. <Ref. to GD(H4SO)-82, DTC P0301 CYLINDER 1 MISFIRE DETECTED, Diagnostic Trouble Code (DTC) Detecting Criteria.>

AY:DTC P0327 KNOCK SENSOR 1 CIRCUIT LOW (BANK 1 OR SINGLE SENSOR)

1. OUTLINE OF DIAGNOSIS

Detect the open or short circuit of knock sensor.
Judge as NG if out of specification.

2. COMPONENT DESCRIPTION

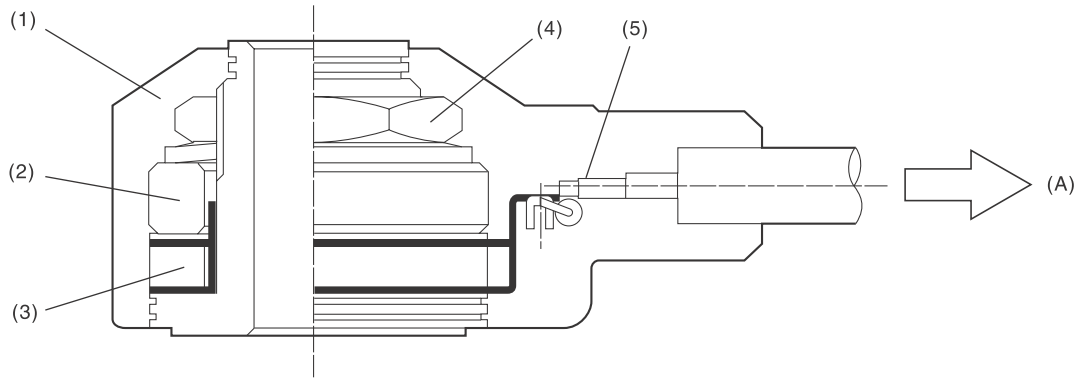

(A) To knock sensor harness

(1) Case
(2) Weight
(3) Piezoelectric element
(4) Nut
(5) Resistance

3. ENABLE CONDITION

Secondary Parameters	Enable Conditions
None	

4. GENERAL DRIVING CYCLE

Always perform the diagnosis continuously.

5. DIAGNOSTIC METHOD

• Abnormality Judgment

If the duration of time while the following conditions are met is longer than the time indicated, judge as NG.

Judgment Value

Malfunction Criteria	Threshold Value
Output voltage	< 0.243 V

Time Needed for Diagnosis: 1000 ms
Malfunction Indicator Light Illumination: Illuminates as soon as a malfunction occurs.

• Normality Judgment

Judge as OK and clear the NG if the continuous time while the following conditions are established is more than the predetermined time.

Judgment Value

Malfunction Criteria	Threshold Value
Output voltage	≥ 0.243 V

Time Needed for Diagnosis: Less than 1 second

AZ:DTC P0328 KNOCK SENSOR 1 CIRCUIT HIGH (BANK 1 OR SINGLE SENSOR)

1. OUTLINE OF DIAGNOSIS

Detect the open or short circuit of knock sensor.
Judge as NG if out of specification.

2. COMPONENT DESCRIPTION

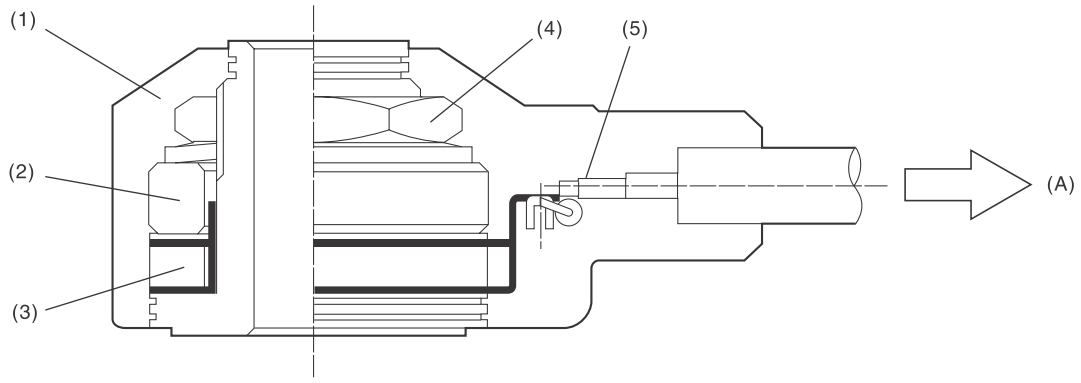

(A) To knock sensor harness

(1) Case
(2) Weight
(3) Piezoelectric element
(4) Nut
(5) Resistance

3. ENABLE CONDITION

Secondary Parameters	Enable Conditions
None	

4. GENERAL DRIVING CYCLE

Always perform the diagnosis continuously.

5. DIAGNOSTIC METHOD

• Abnormality Judgment

If the duration of time while the following conditions are met is longer than the time indicated, judge as NG.

Judgment Value

Malfunction Criteria	Threshold Value
Output voltage	≥ 4.709 V

Time Needed for Diagnosis: 1000 ms
Malfunction Indicator Light Illumination: Illuminates as soon as a malfunction occurs.

• Normality Judgment

Judge as OK and clear the NG if the continuous time while the following conditions are established is more than the predetermined time.

Judgment Value

Malfunction Criteria	Threshold Value
Output voltage	< 4.709 V

Time Needed for Diagnosis: Less than 1 second

BA:DTC P0335 CRANKSHAFT POSITION SENSOR “A” CIRCUIT

1. OUTLINE OF DIAGNOSIS

Detect the open or short circuit of the crankshaft position sensor.
Judge as NG when the crank signal is not input even though the starter was rotated.

2. COMPONENT DESCRIPTION

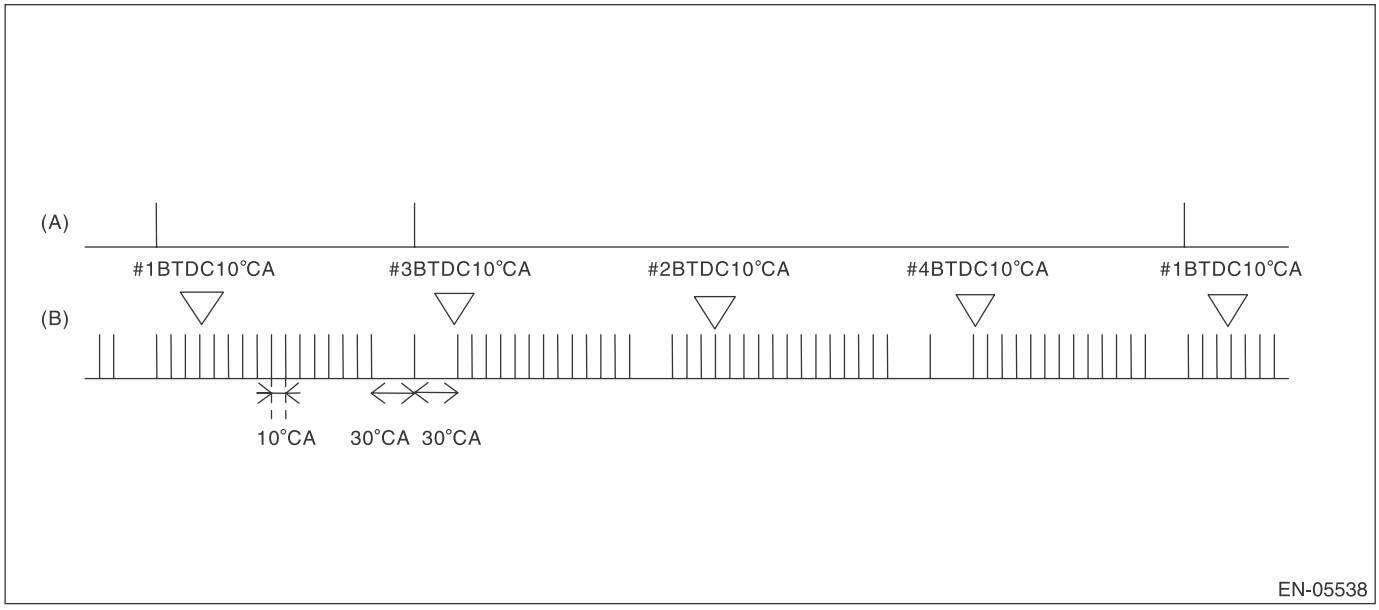

(A) Cam signal (B) Crankshaft signal

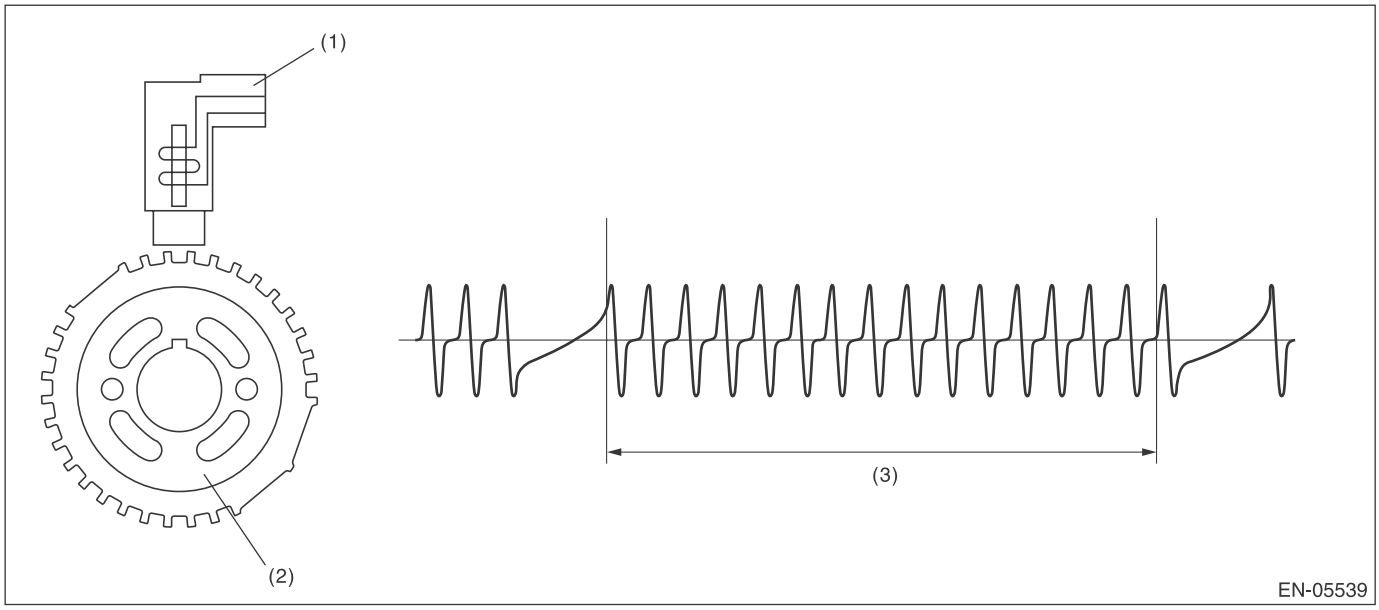

(1) Crankshaft position sensor (2) Crank sprocket (3) Crankshaft half-turn

3. ENABLE CONDITION

Secondary Parameters	Enable Conditions
None	

4. GENERAL DRIVING CYCLE

Always perform the diagnosis continuously.

5. DIAGNOSTIC METHOD

• Abnormality Judgment

If the duration of time while the following conditions are met is longer than the time indicated, judge as NG.

Judgment Value

Malfunction Criteria	Threshold Value
Starter switch	ON
Crankshaft position sensor signal	Not detected
Battery voltage	≥ 8 V

Time Needed for Diagnosis: 3000 ms
Malfunction Indicator Light Illumination: Illuminates as soon as a malfunction occurs.

• Normality Judgment

Judge as OK and clear the NG if the continuous time while the following conditions are established is more than the predetermined time.

Judgment Value

Malfunction Criteria	Threshold Value
Crankshaft position sensor signal	Input exists
Battery voltage	≥ 8 V

Time Needed for Diagnosis: Less than 1 second

BB:DTC P0336 CRANKSHAFT POSITION SENSOR “A” CIRCUIT RANGE/PERFORMANCE

1. OUTLINE OF DIAGNOSIS

Detect for faults in crankshaft position sensor output properties.
Judge as NG when there is a problem in the number of crankshaft signals for every revolution.

2. COMPONENT DESCRIPTION

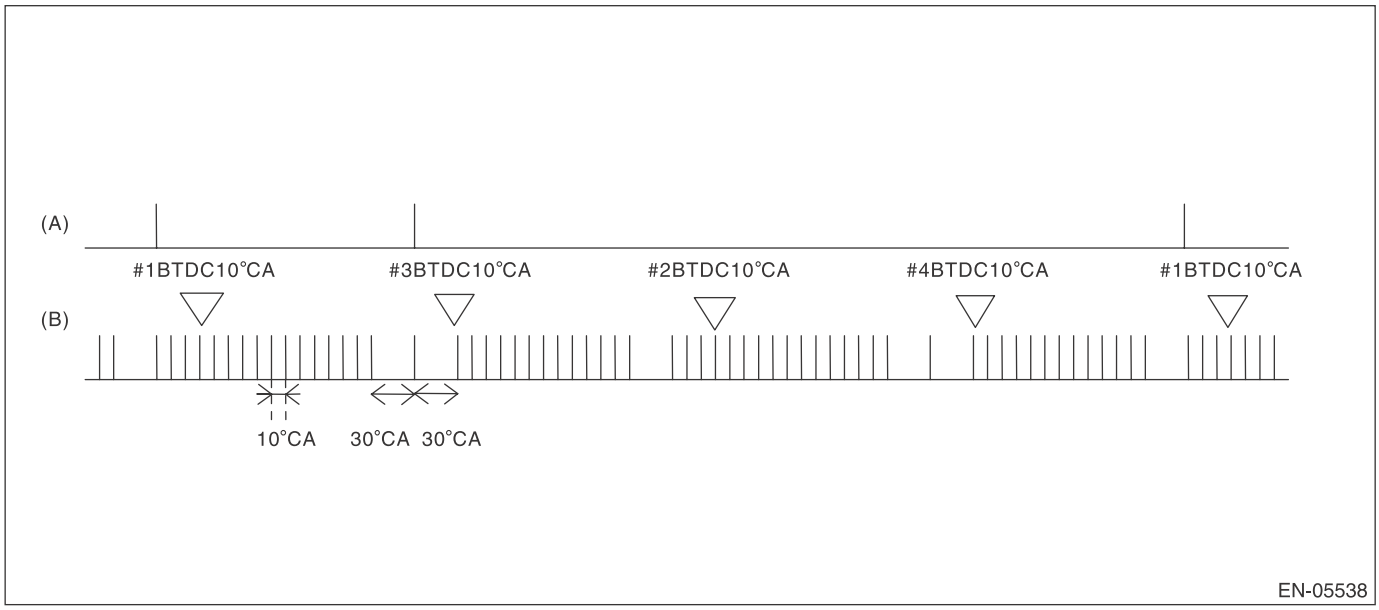

(A) Cam signal (B) Crankshaft signal

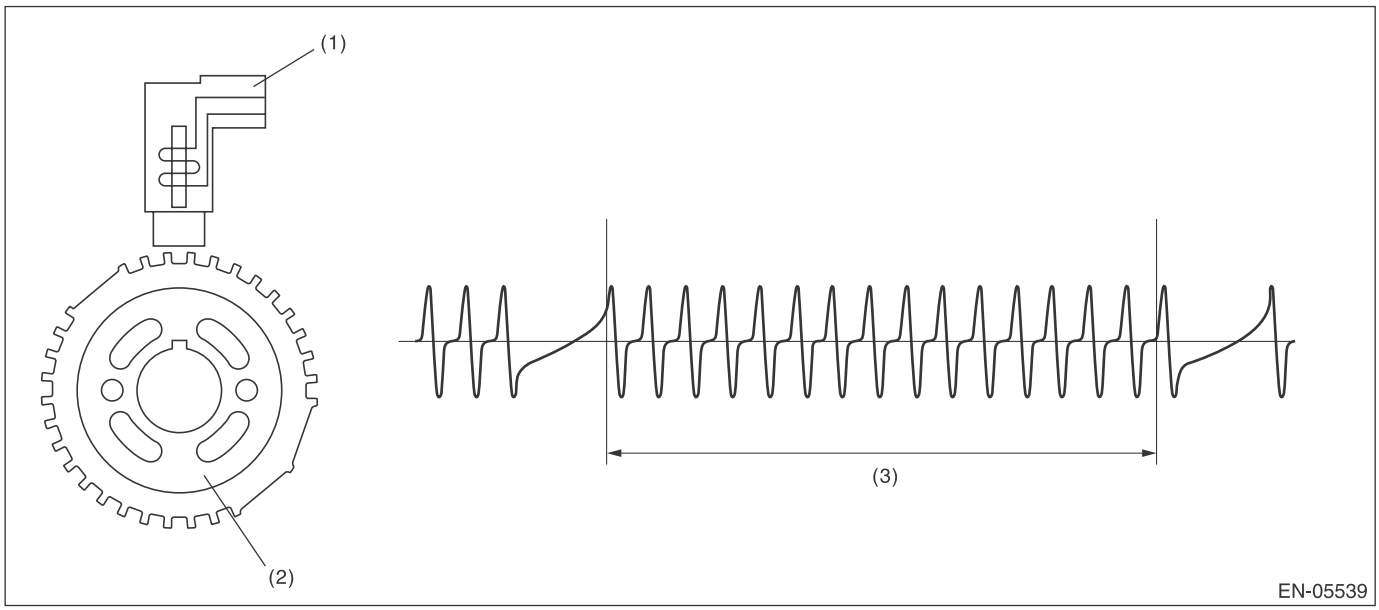

(1) Crankshaft position sensor (2) Crank sprocket (3) Crankshaft half-turn

3. ENABLE CONDITION

Secondary Parameters	Enable Conditions
Battery voltage	≥ 8 V
Engine speed	< 4000 rpm

4. GENERAL DRIVING CYCLE

Perform the diagnosis continuously under 3000 rpm engine speed.

5. DIAGNOSTIC METHOD

- **Abnormality Judgment**

Judge as NG when the following conditions are established.

Judgment Value

Malfunction Criteria	Threshold Value
Cylinder number identification	Completed
Amount of crank sensor signal during 1 rev.	Not = 30

Time Needed for Diagnosis: 10 engine revs.
Malfunction Indicator Light Illumination: Illuminates when malfunction occurs in 2 continuous driving cycles.

- **Normality Judgment**

Judge as OK and clear the NG if the continuous time while the following conditions are established is more than the predetermined time.

Judgment Value

Malfunction Criteria	Threshold Value
Cylinder number identification	Completed
Amount of crank sensor signal during 1 rev.	= 30

Time Needed for Diagnosis: Less than 1 second

BC:DTC P0340 CAMSHAFT POSITION SENSOR “A” CIRCUIT (BANK 1 OR SINGLE SENSOR)

1. OUTLINE OF DIAGNOSIS

Detect the open or short circuit of the camshaft position sensor.
Judge as NG when the number of camshaft signals remains abnormal.

2. COMPONENT DESCRIPTION

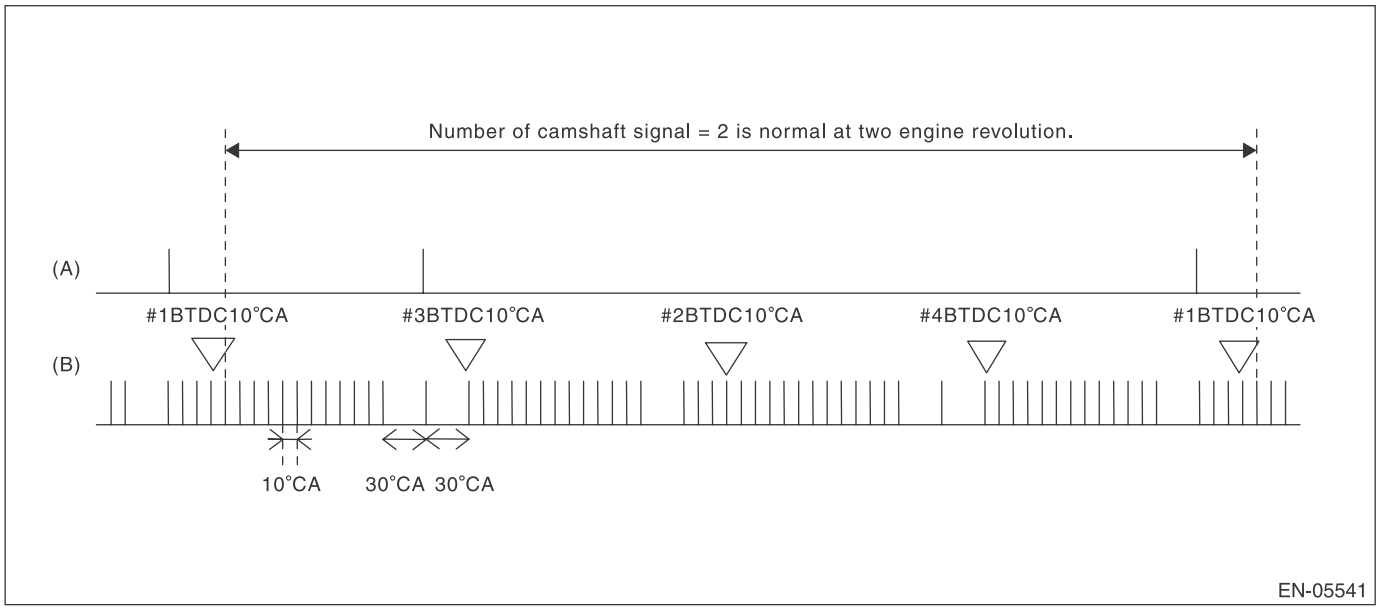

(A) Camshaft signal (B) Crankshaft signal

3. ENABLE CONDITION

Secondary Parameters	Enable Conditions
None	

4. GENERAL DRIVING CYCLE

Always perform the diagnosis continuously.

5. DIAGNOSTIC METHOD

Abnormality Judgment

If the duration of time while the following conditions are met is longer than the time indicated, judge as NG.

Judgment Value

Malfunction Criteria	Threshold Value
Battery voltage	≥ 8 V
Amount of camshaft sensor signal during 2 revs.	Not = 2

Time Needed for Diagnosis: Engine two revolutions × 4 time(s)
Malfunction Indicator Light Illumination: Illuminates as soon as a malfunction occurs.

Normality Judgment

Judge as OK and clear the NG if the continuous time while the following conditions are established is more than the predetermined time.

Judgment Value

Malfunction Criteria	Threshold Value
Voltage	≥ 8 V
Amount of camshaft sensor signal during 2 revs.	= 2

Time Needed for Diagnosis: Two engine revolutions

BD:DTC P0341 CAMSHAFT POSITION SENSOR “A” CIRCUIT RANGE/PERFORMANCE (BANK 1 OR SINGLE SENSOR)

1. OUTLINE OF DIAGNOSIS

Detect the malfunction of camshaft position sensor output property.
Judge as NG when the camshaft line signal input timing is shifted from the crankshaft signal because of timing belt tooth chip etc.

2. COMPONENT DESCRIPTION

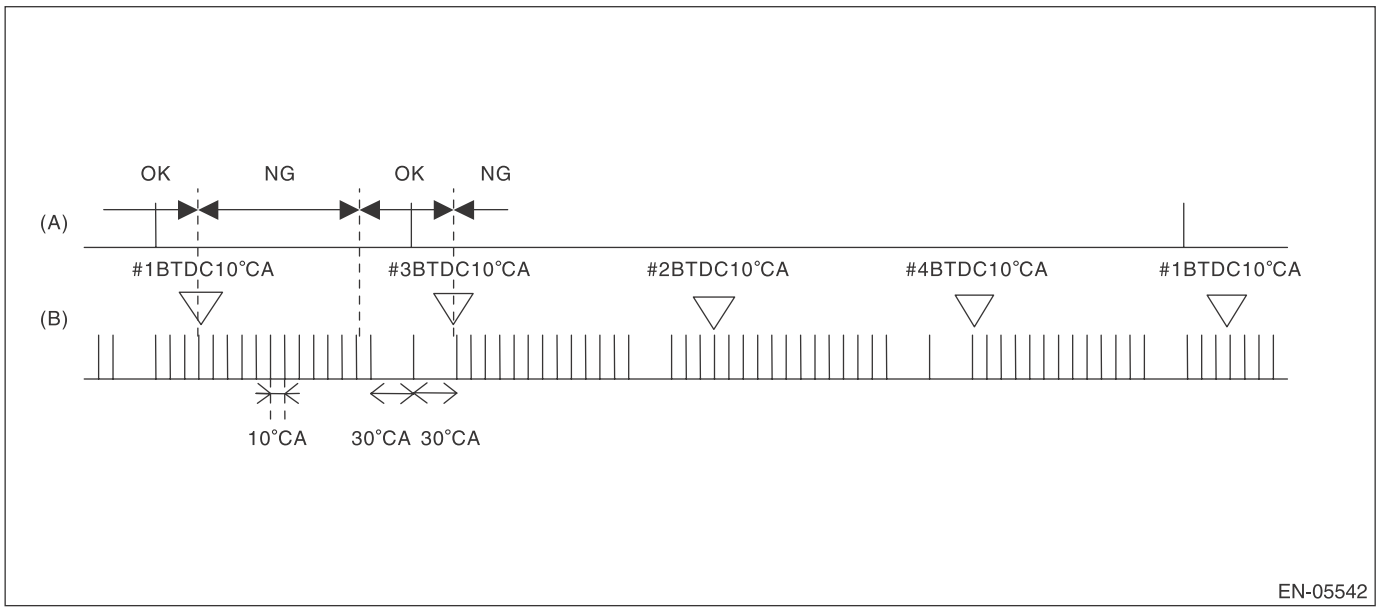

(A) Camshaft signal
(B) Crankshaft signal

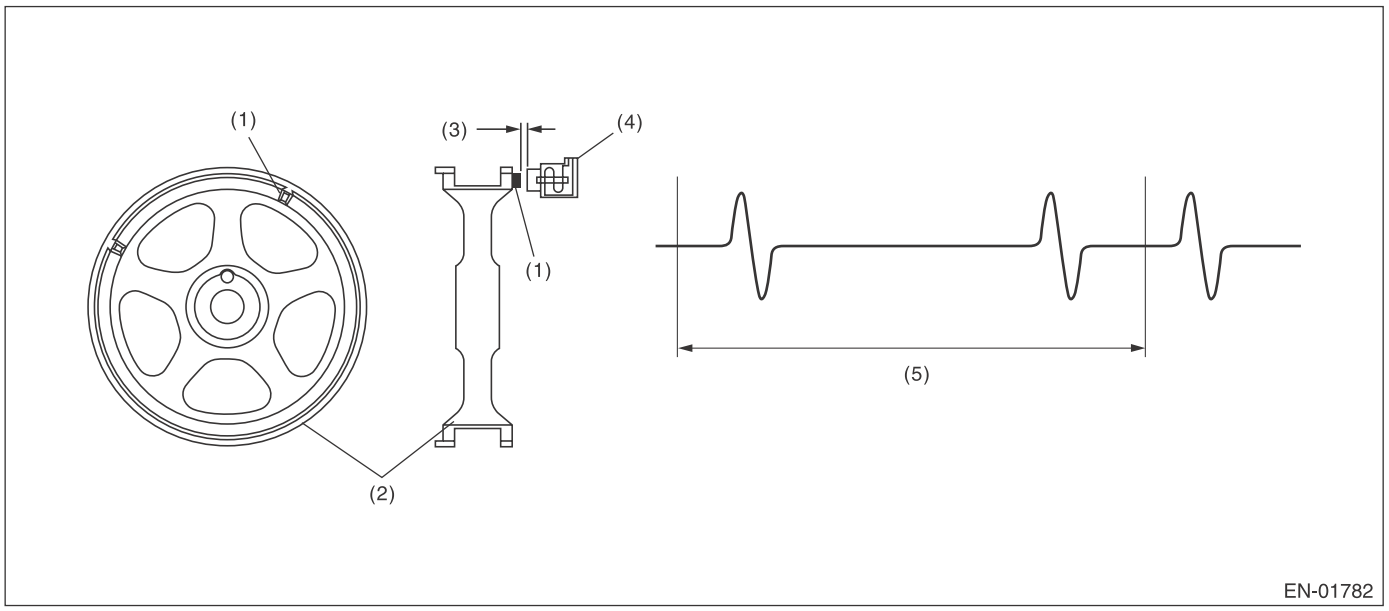

(1) Boss
(2) Cam sprocket
(3) Air gap
(4) Camshaft position sensor
(5) Camshaft one revolution (engine two revolutions)

3. ENABLE CONDITION

Secondary Parameters	Enable Conditions
Cylinder number identification	Completed
Battery voltage	≥ 8 V
Engine speed	550 rpm — 1000 rpm
Engine operation	Idling
Misfire	Not detected
Engine speed variation for 4 ms	≤ 12799.8 rpm

4. GENERAL DRIVING CYCLE

Always perform the diagnosis continuously at idle speed.

5. DIAGNOSTIC METHOD

- **Abnormality Judgment**

If the duration of time while the following conditions are met is longer than the time indicated, judge as NG.

Judgment Value

Malfunction Criteria	Threshold Value
Position of camshaft position sensor signal	Not between BTDC 10°CA and BTDC 80°CA

Time Needed for Diagnosis: 10 engine revs.
Malfunction Indicator Light Illumination: Illuminates when malfunction occurs in 2 continuous driving cycles.

- **Normality Judgment**

Judge as OK and clear the NG if the continuous time while the following conditions are established is more than the predetermined time.

Judgment Value

Malfunction Criteria	Threshold Value
Position of camshaft position sensor signal	Between BTDC10°CA and BTDC80°CA

Time Needed for Diagnosis: Two engine revolutions

BE:DTC P0400 EXHAUST GAS RECIRCULATION FLOW

1. OUTLINE OF DIAGNOSIS

Detect EGR system malfunction.
Intake manifold pressure (negative pressure) is constant because the throttle valve is fully closed during deceleration fuel cut. At this time, when the EGR valve is opened/closed, the intake manifold pressure will change. EGR System OK/NG is judged by the range of this change.

2. COMPONENT DESCRIPTION

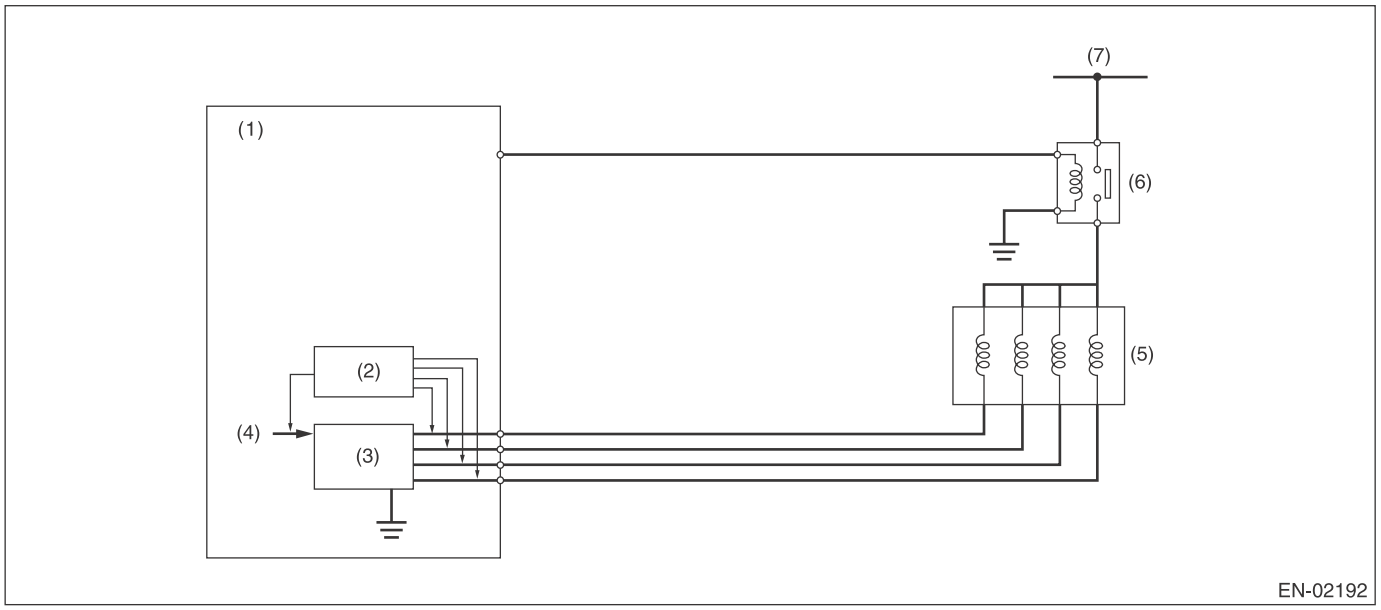

(1) ECM
(2) Detecting circuit
(3) Switching circuit
(4) CPU
(5) EGR valve
(6) Main relay
(7) Battery power supply

3. ENABLE CONDITION

Secondary Parameters	Enable Conditions
Elapsed time after starting the engine	≥ 40 s
Engine coolant temperature	≥ 75 °C(167 °F)
Engine speed	1200 rpm — 2950 rpm
Intake manifold pressure (absolute pressure)	< 44 kPa (330 mmHg, 13 inHg)
Ambient air temperature	≥ 5 °C(41 °F)
Throttle position	< 0.25 °
Battery voltage	≥ 10.9 V
Atmospheric pressure	≥ 75 kPa (563 mmHg, 22.2 inHg)
Vehicle speed	≥53 km/h (32.9 MPH)
Fuel shut-off function	In operation
Neutral switch	OFF
After neutral switch ON/OFF change	≥ Value from Map
No load change (A/C, power steering, lighting, rear defogger, heater fan and radiator fan)	≥ 5000 ms

Map

Engine coolant temperature °C (°F)	–40 (–40)	–30 (–22)	–20 (–4)	–10 (14)	0 (32)	10 (50)	20 (68)	30 (86)
After neutral switch change msec	0	0	0	0	0	0	0	0

Engine coolant temperature °C (°F)	40 (104)	50 (122)	60 (140)	70 (158)	80 (176)	90 (194)	100 (212)	110 (230)
After neutral switch change msec	0	0	0	0	0	0	0	0

4. GENERAL DRIVING CYCLE

During deceleration fuel cut from 53 km/h (approx. 33 MPH) or more, perform diagnosis once.
Be careful of vehicle speed and engine speed. (Diagnosis will not be completed if the vehicle speed and engine speed conditions become out of specification due to deceleration.)

5. DIAGNOSTIC METHOD

Measure the pressure values when the enable conditions are established, and perform diagnosis by calculating those results.
1. Label the intake manifold pressure value as PMOF1, which is observed when enable conditions are established, and set the EGR target step to 50 steps (nearly full open).
2. Name the intake manifold pressure value as PMON one second after the target EGR step is set to 50 (when the enabled conditions were established). Then set the target EGR step to 0.
3. Name the intake manifold pressure value as PMOF2 one second after the target EGR step is set to 0 (two seconds after the enabled conditions were established).

- **Abnormality Judgment**

Judge as NG when the following conditions are established.

Judgment Value

Malfunction Criteria	Threshold Value
PMON – (PMOF1 + PMOF2)/2	< 2.5 kPa (18.63 mmHg, 0.7 inHg)

Time Needed for Diagnosis: 1 time
Malfunction Indicator Light Illumination: Illuminates when malfunction occurs in 2 continuous driving cycles.

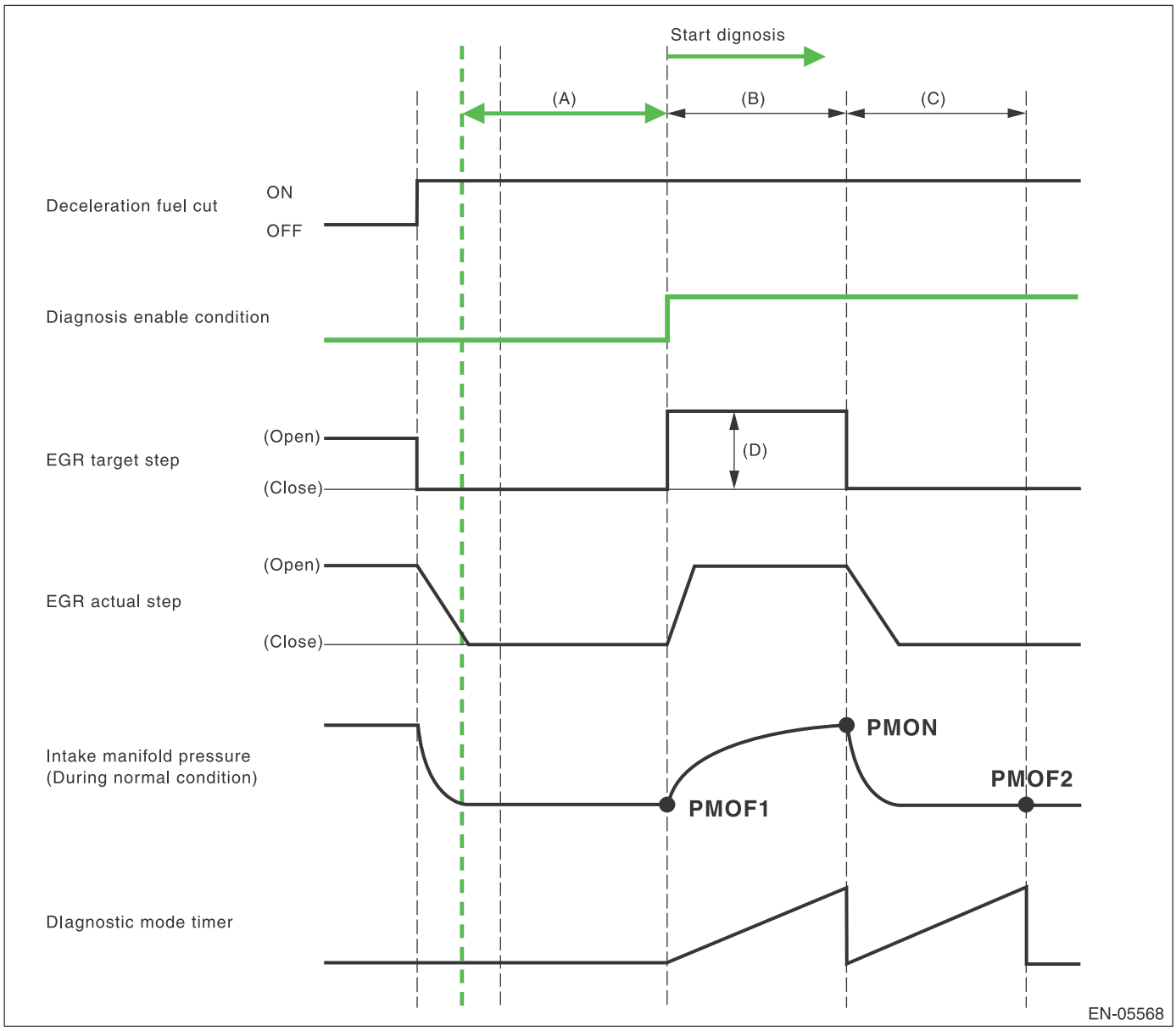

(A) 3000 ms (B) 1000 ms (C) 1000 ms
(D) 45 step(s)

- **Normality Judgment**

Judge as OK and clear the NG if the following conditions are established.

Judgment Value

Malfunction Criteria	Threshold Value
PMON – (PMOF1 + PMOF2)/2	≥ 2.5 kPa (18.63 mmHg, 0.7 inHg)

Time Needed for Diagnosis: 1 time

BF:DTC P0420 CATALYST SYSTEM EFFICIENCY BELOW THRESHOLD (BANK 1)

1. OUTLINE OF DIAGNOSIS

Detect the deterioration of the catalyst function.
Though the front oxygen sensor output would change slowly with a new catalyst, the sensor output with a deteriorated catalyst becomes high and the inversion time is shortened.
For this reason, the catalyst diagnosis is carried out by monitoring the front oxygen sensor output and comparing it with the front oxygen (A/F) sensor output.

2. COMPONENT DESCRIPTION

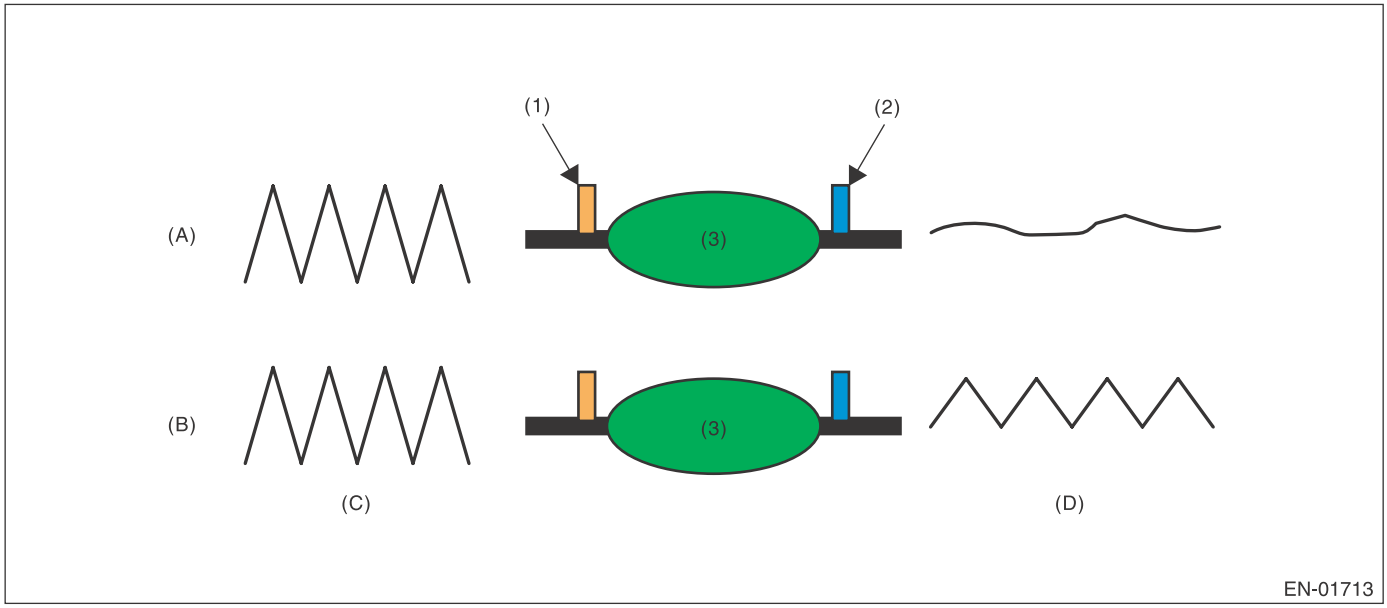

(A)	Normal	(B)	Deterioration	(C)	Output waveform from the front oxygen (A/F) sensor
(D)	Output waveform from the front oxygen sensor				
(1)	Front oxygen (A/F) sensor	(2)	Front oxygen sensor	(3)	Catalytic converter

3. ENABLE CONDITION

Secondary Parameters	Enable Conditions
Battery voltage	≥ 10.9 V
Atmospheric pressure	≥ 75 kPa (563 mmHg, 22.2 inHg)
Engine coolant temperature	≥ 75 °C (167 °F) (PZEV model) ≥ 70 °C (158 °F) (except for PZEV model)
Estimated catalyst temperature	≥ 580 °C (1076 °F) (AT model) ≥ 585 °C (1085 °F) (MT model)
Misfire detection every 200 rotations	< 5 time(s)
Learning value of evaporation gas density	< 0.2
Sub feedback	In operation
Evaporative system diagnosis	Not in operation
Time of difference (< 0.10) between actual lambda and target lambda	≥ 1000 ms
Vehicle speed	> 75 km/h (46.6 MPH)
Amount of intake air	≥ 7 g/s (0.25 oz/s) and < 40 g/s (1.41 oz/s)
Engine load change every 0.5 engine revs.	< 0.02 g/rev (0 oz/rev)
Rear oxygen output change from 660 mV or less to 660 mV or more	Experienced after fuel cut
Elapsed time after starting the engine	≥ 225 s (PZEV model) ≥ 218 s (except for PZEV model)
Purge execution calculated time	≥ 0 s

4. GENERAL DRIVING CYCLE

Perform the diagnosis only once at a constant 75 km/h (46.6 MPH) or higher.

5. DIAGNOSTIC METHOD

After the enable conditions have been established, calculate the front oxygen (A/F) sensor lambda value deviation cumulative value (Σ |(sglmd$_n$ – sglmd$_{n-1}$)|), and rear oxygen sensor output voltage deviation cumulative value (Σ |(ro2sad$_n$ – ro2sad$_{n-1}$)|) in every 32 ms × 4 times. If the front oxygen (A/F) sensor lambda value deviation cumulative value (Σ |(sglmd$_n$ – sglmd$_{n-1}$)|) is the predetermined value or more, calculate the judgment value.

- **Abnormality Judgment**

If the duration of time while the following conditions are met is within the time indicated, judge as NG.

Judgment Value

Malfunction Criteria	Threshold Value
Σ |(ro2sad$_n$ – ro2sad$_{n-1}$)| / Σ |(sglmd$_n$ – sglmd$_{n-1}$)|	> 11 (PZEV model) > 19.5 (except for PZEV model)

Time Needed for Diagnosis: 30 — 55 seconds
Malfunction Indicator Light Illumination: Illuminates when malfunction occurs in 2 continuous driving cycles.

- **Normality Judgment**

Judge as OK and clear the NG if the continuous time while the following conditions are established is within the predetermined time.

Judgment Value

Malfunction Criteria	Threshold Value
Σ |(ro2sad$_n$ – ro2sad$_{n-1}$)| / Σ |(sglmd$_n$ – sglmd$_{n-1}$)|	≤ 11 (PZEV model) ≤ 19.5 (except for PZEV model)

Time Needed for Diagnosis: 30 — 55 seconds

BG:DTC P0442 EVAPORATIVE EMISSION CONTROL SYSTEM LEAK DETECTED (SMALL LEAK)

1. OUTLINE OF DIAGNOSIS

Check if there is a leakage in fuel system or not, and perform the function diagnosis of valve.

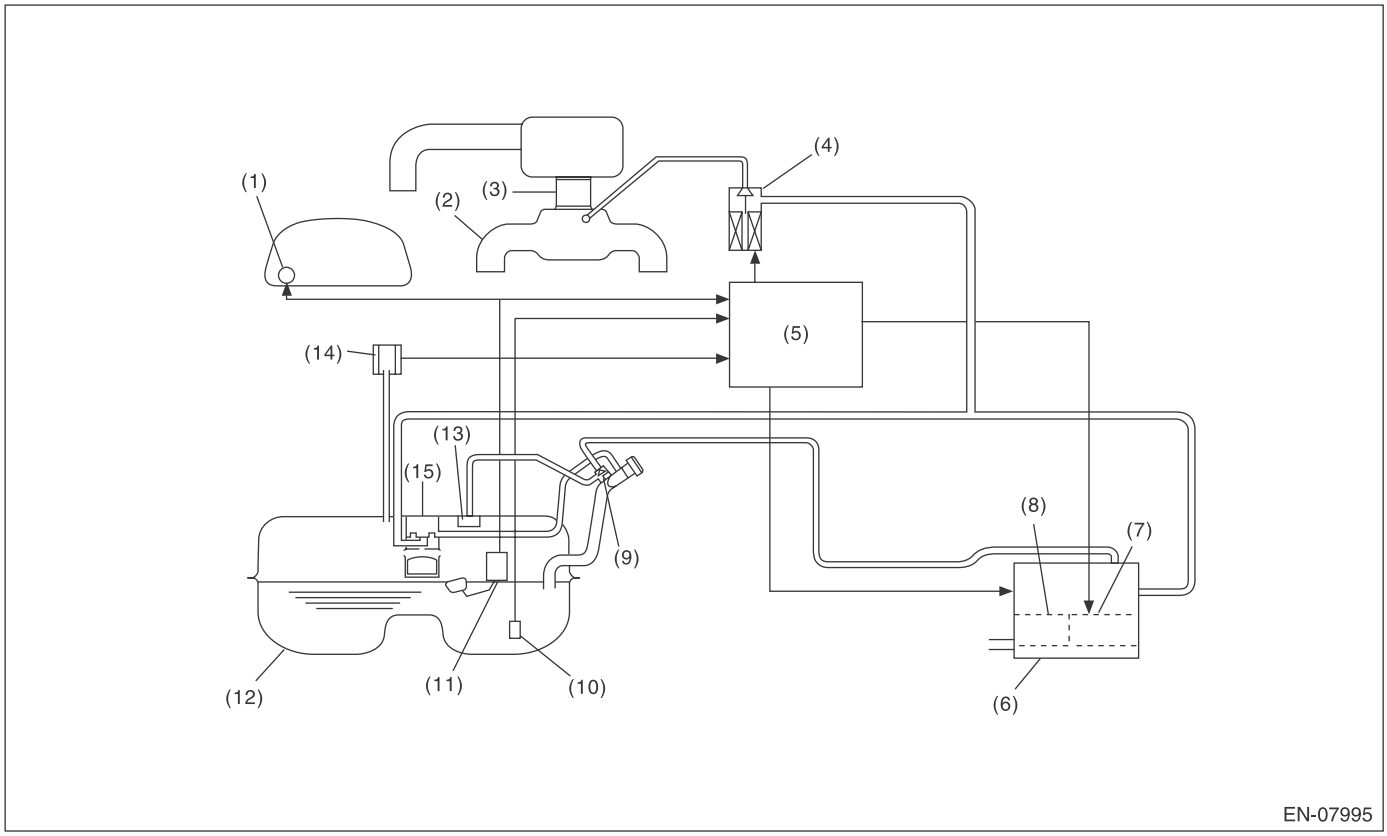

(1)	Fuel gauge	(6)	Canister	(11)	Fuel level sensor
(2)	Intake manifold	(7)	Drain valve	(12)	Fuel tank
(3)	Throttle body	(8)	Drain filter	(13)	Fuel cut valve
(4)	Purge control solenoid valve	(9)	Shut-off valve	(14)	Fuel tank pressure sensor
(5)	Engine control module (ECM)	(10)	Fuel temperature sensor	(15)	Vent valve

In this system diagnosis, check for leakage and valve function is conducted by changing the fuel tank pressure and monitoring the pressure change using the fuel tank pressure sensor. When in 0.04 inch diagnosis, perform in the order of mode Z → mode A → mode B → mode C and mode D; When in 0.02 inch diagnosis, perform in the order of mode A → mode B → mode C → mode D and mode E.

0.04-inch Diagnosis

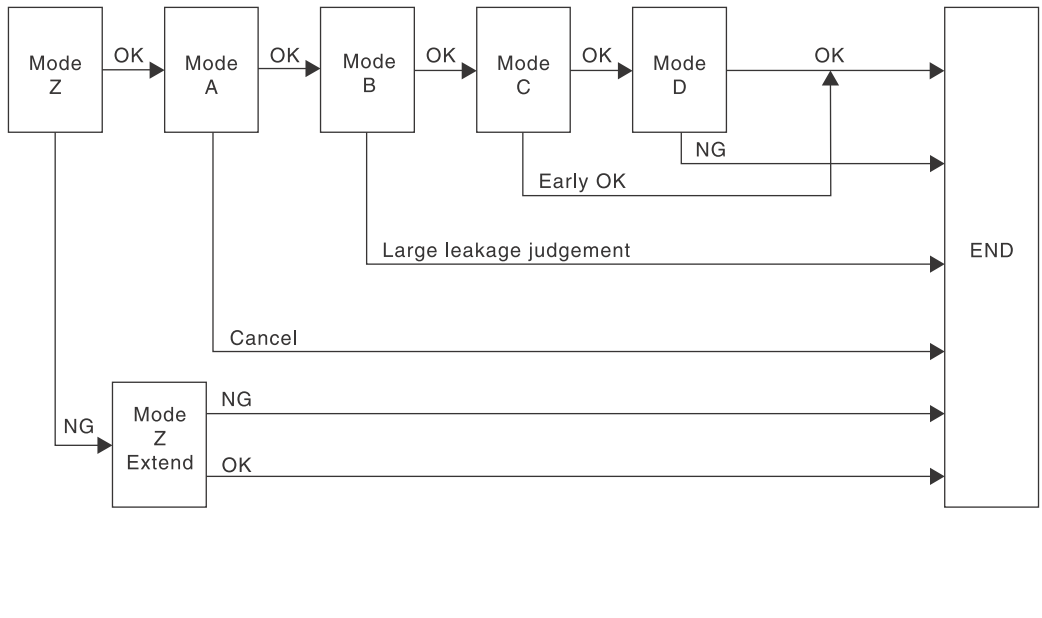

Mode	Mode Description	Diagnosis Period
Mode Z (Purge control solenoid valve opening failure diagnosis)	Perform purge control solenoid valve opening failure diagnosis from the size of tank pressure variation from diagnosis start.	5000 ms + 3000 ms — 5000 ms + 3000 ms + 13000 ms
Mode A (Estimated evaporation amount)	Calculate the tank pressure change amount (P1).	10000 ms
Mode B (Sealed negative pressure, large leakage judgment)	Decrease the pressure in the tank to the target value by introducing the intake manifold pressure to the fuel tank. If the tank pressure cannot be reduced, it is diagnosed as large leak.	0 — 10000 ms + 25000 ms
Mode C (Pressure increase check, advanced OK judgment)	Wait until the tank pressure returns to the target (start level of P2 calculation). If the tank pressure does not become the value, make advanced OK judgment.	0 — 14013 ms
Mode D (Negative pressure variation measurement, evaporation leakage diagnosis)	Calculate the tank pressure variation (P2), and obtain the diagnostic value using P1 found in Mode A. Perform the evaporation diagnosis using the diagnostic value.	0 ms + 10000 ms

Mode Table for Evaporative Emission Control System Diagnosis

Mode	Behavior of tank internal pressure under normal conditions	Diagnostic item	DTC
Mode Z	Roughly the same as barometric pressure (Same as 0 kPa (0 mmHg, 0 inHg))	Purge control solenoid valve is judged to be open.	P0457
Mode A	Pressure is in proportion to amount of evaporative emission.	—	None
Mode B	Negative pressure is formed due to intake manifold negative pressure	Large leak	P0457
Mode C	Reaches target pressure	—	None
Mode D	Pressure change is small.	EVAP system large leak determination. [1.0 mm (0.04 in)]	P0442

0.02-inch Diagnosis

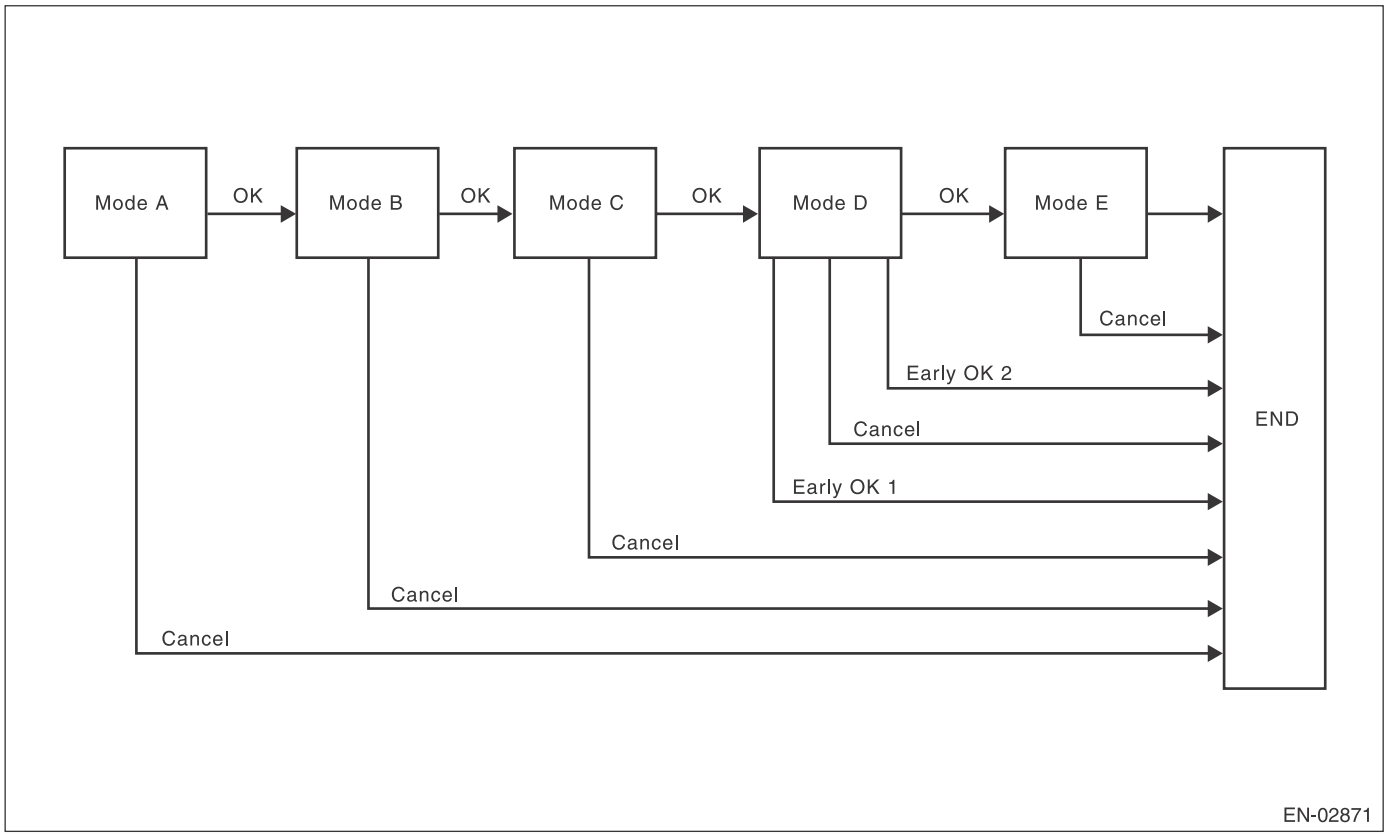

Mode	Mode Description	Diagnosis Period
Mode A (0 point compensation)	When the pressure in the tank is not near 0 mmHg, wait until it returns to 0 point (near 0 mmHg).	0 — Value of Map 1
Mode B (Negative pressure introduced)	Decrease the pressure in the tank to the target value by introducing the intake manifold pressure to the fuel tank.	0 — Value of Map 2
Mode C (Negative pressure maintained)	Wait until the tank pressure returns to the target (start level of P2 calculation).	Value from Map 3
Mode D (Negative pressure change calculated)	Calculate the time it takes for the tank pressure to change to the Mode E shifting pressure. If the tank pressure does not change to the Mode E shifting pressure, make advanced OK judgment.	0 — 0 ms + Value from Map 4
Mode E (Evaporation generated amount calculation)	Calculate the amount of evaporation (P1).	0 — 0 ms + Value from Map 4 + Value from Map 5

Map 1

Fuel level (ℓ , US gal, Imp gal)	10	20, 5.28, 4.4	30, 7.93, 6.6	40, 10.57, 8.8	50, 13.21, 11	60, 15.85, 13.2
Time Needed for Diagnosis (ms)	6400	6530	6660	7020	7380	7380

Map 2

Fuel level (ℓ , US gal, Imp gal)	10.5	27, 7.13, 5.94	43, 11.36, 9.46	59.5, 15.72, 13.09
Time Needed for Diagnosis (ms)	20280	20621	21816	21816

Map 3

Fuel level (ℓ , US gal, Imp gal)	10.5	27, 7.13, 5.94	43, 11.36, 9.46	59.5, 15.72, 13.09
Time Needed for Diagnosis (ms)	21208	19288	9742	8057

Map4

Fuel level (ℓ , US gal, Imp gal)	10	20, 5.28, 4.4	30, 7.93, 6.6	40, 10.57, 8.8	50, 13.21, 11	60, 15.85, 13.2
Time Needed for Diagnosis (ms)	200000	200000	200000	200000	200000	200000

Map 5

Fuel level (ℓ , US gal, Imp gal)	10	20, 5.28, 4.4	30, 7.93, 6.6	40, 10.57, 8.8	50, 13.21, 11	60, 15.85, 13.2
Time Needed for Diagnosis (ms)	80000	70000	60000	60000	60000	60000

2. COMPONENT DESCRIPTION

Drain valve controls the ambient air to be introduced to the canister.

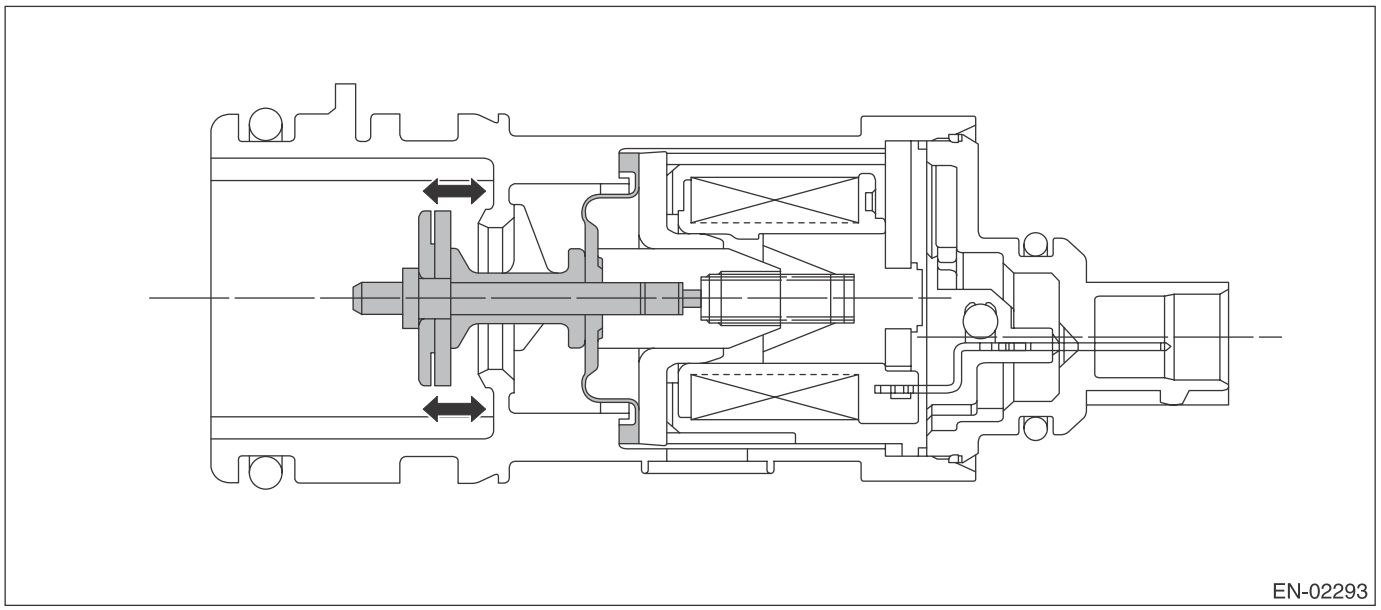

3. ENABLE CONDITION

0.04-inch Diagnosis

Secondary Parameters	Enable Conditions
Battery voltage	≥ 10.9 V
Atmospheric pressure	≥ 75 kPa (563 mmHg, 22.2 inHg)
Total time of canister purge operation	≥ 120000 ms
Learning value of evaporation gas density	< 0.08
Engine speed	1050 rpm — 4000 rpm
Fuel tank pressure	≥ –4 kPa (–30 mmHg, –1.2 inHg)
Intake manifold relative vacuum (relative pressure)	≥ –13.3 kPa (–100 mmHg, –3.9 inHg)
Continuous time of the status where fuel level is 10.5 ℓ (2.77 US gal, 2.31 Imp gal) — 59.5 ℓ (15.72 US gal, 13.09 Imp gal)	≥ 37000 ms
Closed air/fuel ratio control	In operation
Fuel temperature	–10 °C (14 °F) — 45 °C (113 °F)
Intake air temperature	≥ –10 °C (14 °F)
Pressure variation every one second	< 1.7 mmHg (Mode A) < 1.7 mmHg (Mode D)
Minimum pressure variation value every one second – Maximum pressure variation value every one second	< 1.7 mmHg (Mode A) < 1.7 mmHg (Mode D)
Fuel level variation every 128 ms	< Value of Map 6
Air fuel ratio	0.76 — 1.25
Elapsed time after starting the engine	≥ 855 s
or	
Elapsed time after starting the engine	≥ 335 s and Vehicle speed 65 km/h (40.4 MPH) or more
or	
Elapsed time after starting the engine	≥ 335 s and Continue for 40000 ms or more at a vehicle speed of 50 km/h (31.1 MPH) or more
or	
Elapsed time after starting the engine	≥ 335 s and Continue for 83000 ms or more at a vehicle speed of 24 km/h (14.9 MPH) or more

Map 6

Fuel level (ℓ , US gal, Imp gal)	10, 2.64, 2.2	20, 5.28, 4.4	25, 6.61, 5.5	30, 7.93, 6.6	43, 11.36, 9.46	45, 11.89, 9.9	50, 13.21, 11	60, 15.85, 13.2
Change (ℓ , US gal, Imp gal)	4, 1.06, 0.88	5, 1.32, 1.1	6.5, 1.72, 1.43	4, 1.06, 0.88	5, 1.32, 1.1	5, 1.32, 1.1	6, 1.59, 1.32	8, 2.11, 1.76

0.02-inch Diagnosis

Secondary Parameters	Enable Conditions
At starting a diagnosis	
Evap. diagnosis	Incomplete
Battery voltage	≥ 10.9 V
Atmospheric pressure	≥ 75 kPa (563 mmHg, 22.2 inHg)
Time since last incomplete 0.02-inch leakage diagnosis	
When cancelling in mode A	> 120000 ms
When cancelling in other than mode A	> 230000 ms
Total time of canister purge operation	≥ 120000 ms
Elapsed time after starting the engine	≥ 120 s
Fuel temperature	–10 °C (14 °F) — 55 °C (131 °F)
Continuous time of the status where fuel level is 10.5 ℓ (2.77 US gal, 2.31 Imp gal) — 59.5 ℓ (15.72 US gal, 13.09 Imp gal)	≥ 37000 ms
Intake manifold relative vacuum (relative pressure)	≥ –8 kPa (–60 mmHg, –2.4 inHg)
Fuel tank pressure	–0.7 kPa (–5 mmHg, –0.2 inHg) — 0.4 kPa (2.9 mmHg, 0.1 inHg)
Closed air/fuel ratio control	In operation
Engine speed	1050 rpm — 4000 rpm
Vehicle speed	Continue the status of 50 km/h (31.1 MPH) — 510 km/h (316.9 MPH) for 125000 ms or more. or ≥ 100 km/h (62.1 MPH) or Continue for 40000 ms or more at a vehicle speed of 90 km/h (55.9 MPH) or more or Continue for 90000 ms or more at a vehicle speed of 80 km/h (49.7 MPH) or more
During diagnosis	
Change of fuel level	≤ Value of Map 7
Pressure variation every one second	< 0.1 kPa (0.44 mmHg, 0 inHg)
Minimum pressure variation value every one second – Maximum pressure variation value every one second	< 0.1 kPa (0.51 mmHg, 0 inHg) (Mode D)
| Tank pressure variation every one second |	≤ 0.1 kPa (0.75 mmHg, 0 inHg)
Barometric pressure change	–0.5 kPa (–3.6 mmHg, –0.1 inHg) — 0.3 kPa (2.4 mmHg, 0.1 inHg) (Mode D) –0.3 kPa (–2.4 mmHg, –0.1 inHg) — 0.3 kPa (2.4 mmHg, 0.1 inHg) (Mode E)

Map 7

Fuel level (ℓ , US gal, Imp gal)	10, 2.64, 2.2	20, 5.28, 4.4	25, 6.61, 5.5	30, 7.93, 6.6	43, 11.36, 9.46	45, 11.89, 9.9	50, 13.21, 11	60, 15.85, 13.2
Change (ℓ , US gal, Imp gal)	4, 1.06, 0.88	5, 1.32, 1.1	6.5, 1.72, 1.43	4, 1.06, 0.88	5, 1.32, 1.1	5, 1.32, 1.1	6, 1.59, 1.32	8, 2.11, 1.76

4. GENERAL DRIVING CYCLE

0.04-inch Diagnosis

- Perform the diagnosis only once in 335 seconds or more after starting the engine, at a constant speed of 24 km/h (15 MPH) or more for 83 seconds or more.
- Pay attention to the fuel temperature and fuel level.

0.02-inch Diagnosis

- Perform the diagnosis after 125 seconds or more have elapsed at a constant engine speed of 50 km/h (31 MPH) or higher to judge as NG or OK.
- If judgment cannot be made, repeat the diagnosis.
- Pay attention to the fuel level.

5. DIAGNOSTIC METHOD

Purge control solenoid valve stuck open fault diagnosis

DTC
P0457 Evaporative Emission Control System Leak Detected (Fuel Cap Loose/Off)

Purpose of Mode Z

When performing the leakage diagnosis of EVAP system, the purge control solenoid valve must operate normally. Therefore, mode Z is used to diagnose the purge control solenoid valve stuck open condition. Note that if a purge control solenoid valve stuck open fault is detected, the EVAP system leakage diagnosis is cancelled.

Diagnostic method

Purge control solenoid valve functional diagnosis is performed by monitoring the tank pressure in mode Z.

- **Abnormality Judgment**

If OK judgment cannot be made, extend Mode Z, and Judge as NG when the following conditions are established after predetermined amount of time.

Judgment Value

Malfunction Criteria	Threshold Value	DTC
evptez – evptezha	> 0.9 kPa (6.5 mmHg, 0.3 inHg)	P0457
evptezini	≤ 0.4 kPa (2.9 mmHg, 0.1 inHg)	
Time of no fuel sloshing with value from Map 6 or more	≥ 40000 ms	

Time Needed for Diagnosis: 5000 ms + 3000 ms + 13000 ms

Malfunction Indicator Light Illumination: Illuminates when malfunction occurs in 2 continuous driving cycles.

When judgment for purge control solenoid valve stuck open NG is made, end the evaporative diagnosis. Cancel the evaporative diagnosis when the OK/NG judgment for purge control solenoid valve stuck open cannot be made in Mode Z.

- **Normality Judgment**

Judge as OK and change to Mode A when the following conditions are established after 3000 ms has passed since Mode Z started.

Judgment Value

Malfunction Criteria	Threshold Value	DTC
evptez – evptezha	≤ 0.4 kPa (3 mmHg, 0.1 inHg)	P0457

Normal

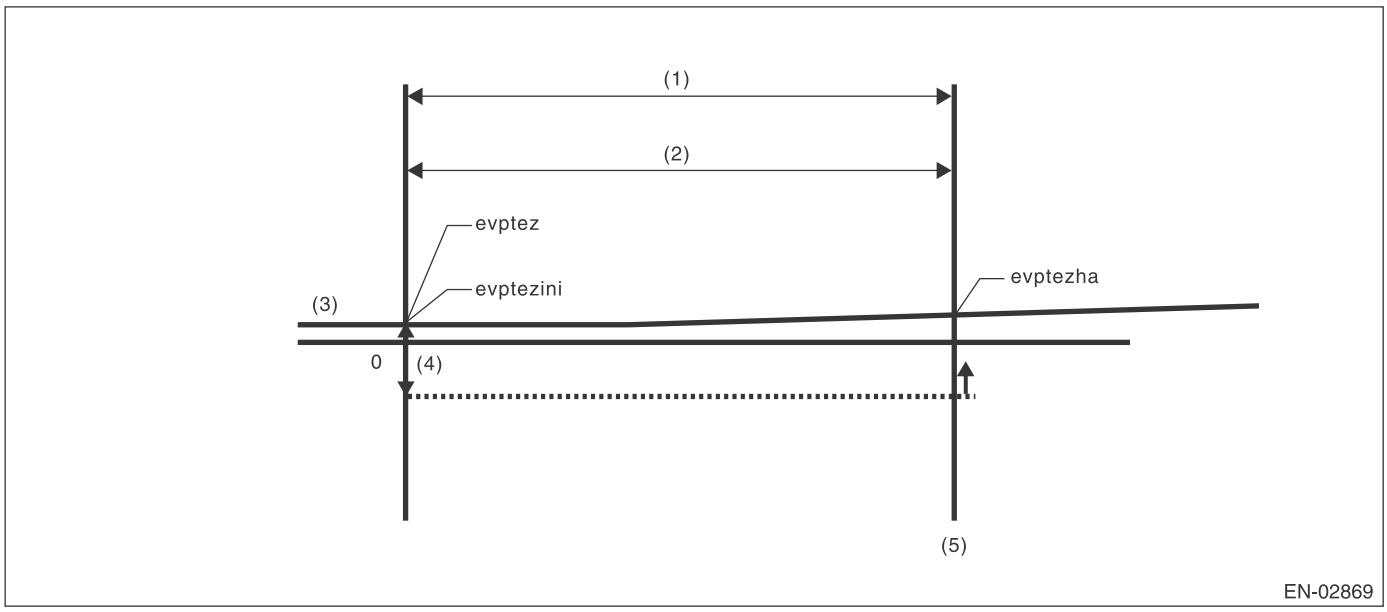

(1) Mode Z
(2) 3000 ms
(3) Fuel tank pressure
(4) 0.4 kPa (3 mmHg, 0.1 inHg)
(5) OK judgment

evptez – evptezha ≤ 0.4 kPa (3 mmHg, 0.1 inHg) Normal when above is established
Time Needed for Diagnosis: 5000 ms + 3000 ms

Purge control solenoid valve Open Fixation

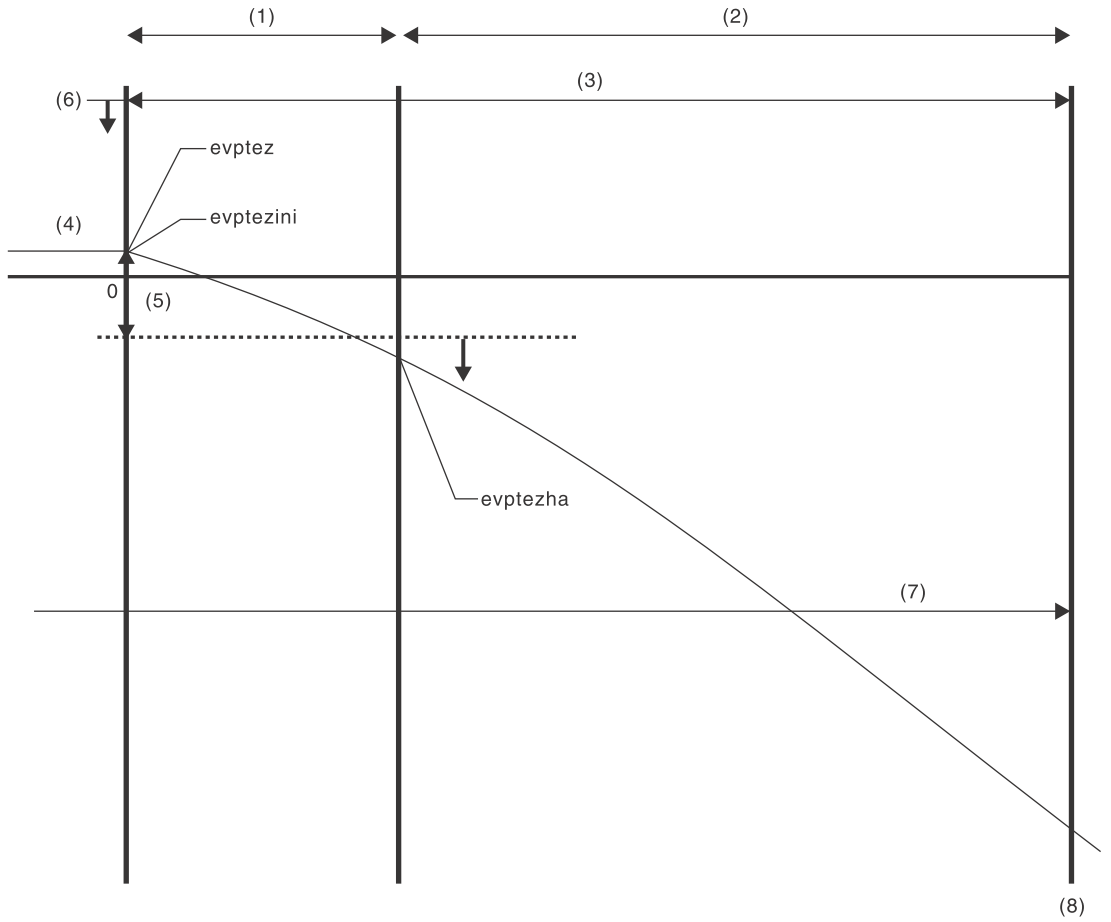

(1)	Mode Z	(4)	Fuel tank pressure	(7)	40000 ms no fuel sloshing
(2)	Extended mode Z	(5)	0.9 kPa (6.5 mmHg, 0.3 inHg)	(8)	NG judgment
(3)	5000 ms + 3000 ms + 13000 ms	(6)	0.4 kPa (2.9 mmHg, 0.1 inHg)		

- evptezini ≤ 0.4 kPa (2.9 mmHg, 0.1 inHg)
- evptez – evptezha > 0.9 kPa (6.5 mmHg, 0.3 inHg)
- No fuel sloshing with value from Map 6 or more lasts for 40000 ms.

Judge as abnormal when all are established.

Leak Diagnosis

DTC
P0442 Evaporative Emission Control System Leak Detected (Small Leak)
P0457 Evaporative Emission Control System Leak Detected (Fuel Cap Loose/Off)

- The diagnostic consists of creating a sealed vacuum in the fuel tank and then determining the presence of leakage from the speed at which the tank internal pressure returns to barometric pressure.
- The diagnosis is divided into the following five phases.

Mode A: (Estimated evaporation gas amount)
Calculate the tank pressure change amount (P1) when using mode A. After calculating P1, switch to mode B.
Mode B: (Negative pressure sealed)
Introduce negative pressure in the intake manifold to the tank.
Approx. 0 → –1.4 kPa (0 → –10.5 mmHg, 0 → –0.4 inHg)
When the pressure above (desired negative pressure) is reached, enters Mode C.
In this case, if the tank pressure does not reach the target negative pressure, judge that there is a large leakage in the system and terminate the evaporative emission control system diagnosis.
Abnormality Judgment
Judge as NG (large leakage) when the following conditions are established.
Judgment Value

Malfunction Criteria	Threshold Value	DTC
Time to reach target negative pressure or Mode B time (Min. pressure value in tank when in mode B) – (Tank pressure when mode B started)	≥ 10000 ms + 25000 ms ≥ 10000 ms > –0.5 kPa (–4 mmHg, –0.2 inHg)	P0457

Time Needed for Diagnosis: 5000 ms + 3000 ms + 10000 ms + 10000 ms + 25000 ms
Mode C: (Check pressure rise)
Stop the introduction of negative pressure. (Wait until the tank pressure returns to the start level of P2 calculation.)
Change to Mode D when the tank pressure returns to the start level of P2 calculation.
Judge immediate OK and change to Mode E when it does not return in spite of spending the specified time.

Tank pressure when starting calculation of P2	Time for advanced OK judgment
–1.3 kPa (–9.75 mmHg, –0.4 inHg)	14013 ms

Time Needed for Diagnosis: 5000 ms + 3000 ms + 10000 ms + 10000 ms + 25000 ms + 14013 ms
Mode D: (Measure amount of negative pressure change)
Monitor the tank pressure change amount when using mode D. In this case, the tank pressure increases, (nears barometric pressure) because evaporation occurs. However, if any leakage exists, the pressure increases additionally in proportion to this leakage. The pressure variation of this tank is P2.
After calculating P2, perform a small leak diagnosis according to the items below.
When Mode D is ended
Assign tank variations measured in Mode A and Mode D, P1 and P2, to the formula below, judge small leaks in the system. If the measured judgment value exceeds the threshold value, it is judged to be a malfunction.

Abnormality Judgment
Judge as NG when the following conditions are established within the predetermined time. Judge as OK and clear the NG if the following conditions are not established within the predetermined time.

Judgment Value

Malfunction Criteria	Threshold Value	DTC
P2 – 1.5 – × P1 P2: Tank pressure that changes every 10000 ms in mode D P1: Tank pressure that changes every 10000 ms in mode A	> Value of Map 8	P0442

*1.5 –: Evaporation amount compensation value when below negative pressure (Amount of evaporation occurrence increases as a vacuum condition increases.)

Map 8 Fault criteria limit for Evaporative emission control system diagnosis

Fuel temperature vs. Fuel level	15 °C (59 °F)	25 °C (77 °F)	35 °C (95 °F)	45 °C (113 °F)
10.5 ℓ (2.77 US gal, 2.31 Imp gal)	0.3 kPa (2.1 mmHg, 0.1 inHg)	0.3 kPa (2.1 mmHg, 0.1 inHg)	0.3 kPa (2.3 mmHg, 0.1 inHg)	0.3 kPa (2.4 mmHg, 0.1 inHg)
27 ℓ (7.13 US gal, 5.94 Imp gal)	0.3 kPa (2.32 mmHg, 0.1 inHg)	0.3 kPa (2.5 mmHg, 0.1 inHg)	0.4 kPa (2.73 mmHg, 0.1 inHg)	0.4 kPa (2.88 mmHg, 0.1 inHg)
43 ℓ (11.36 US gal, 9.46 Imp gal)	0.4 kPa (2.88 mmHg, 0.1 inHg)	0.4 kPa (2.97 mmHg, 0.1 inHg)	0.4 kPa (3.23 mmHg, 0.1 inHg)	0.5 kPa (3.43 mmHg, 0.1 inHg)
59.5 ℓ (15.72 US gal, 13.09 Imp gal)	0.5 kPa (3.5 mmHg, 0.1 inHg)	0.5 kPa (3.5 mmHg, 0.1 inHg)	0.5 kPa (3.5 mmHg, 0.1 inHg)	0.5 kPa (3.7 mmHg, 0.1 inHg)

Time Needed for Diagnosis: 5000 ms + 3000 ms + 10000 ms + 10000 ms + 25000 ms + 14013 ms + 10000 ms
Malfunction Indicator Light Illumination: Illuminates when malfunction occurs in 2 continuous driving cycles.

Leak Diagnosis

DTC
P0456 Evaporative Emission Control System Leak Detected (very small leak)
- The diagnostic consists of creating a sealed vacuum in the fuel tank and then determining the presence of leakage from the speed at which the tank internal pressure returns to barometric pressure.
- The diagnosis is divided into the following five phases.

Mode A: (0 point compensation)
When the pressure in the tank is not near 0 mmHg, wait until it returns to 0 point (near 0 mmHg). Shift to mode B when returned to the 0 point. Cancel the diagnosis when 0 point does not return in the specified time.
Mode B: (Negative pressure introduced)
Introduce negative pressure in the intake manifold to the tank.
Approx. 0 → –2 kPa (0 → –15 mmHg, 0 → –0.6 inHg)
When the pressure above (desired negative pressure) is reached, enters Mode C.
When the tank internal pressure does not reach the target vacuum pressure, the diagnosis is cancelled.
Mode C: (Negative pressure maintained)
Stop the introduction of negative pressure. (Wait until the tank pressure returns to the start level of P2 calculation.)
Change to Mode D either when the tank pressure returns to the start level of P2 calculation, or when the predetermined amount of time has passed.
Mode D: (Calculate the amount of negative pressure change)
Monitor the tank pressure in mode D, calculate (P2) the pressure change in the tank, and measure the time (evpdset) for the tank pressure to change to the Mode E shifting pressure. When the Mode E shifting pressure is reached, Mode E is entered. If it does not change to the Mode E shifting pressure after the predetermined amount of time has passed, make advanced OK judgment or cancel the diagnosis.

Normality Judgment
Judge as OK when the following conditions are established.

Judgment Value

Malfunction Criteria	Threshold Value
Advanced OK judgment 1	
Mode D time	≥ 0 ms + 20000 ms
Tank internal pressure	≤ Value of Map 9
Advanced OK judgment 2	
Mode D time	≥ 0 ms + Value of Map 10
P2	≤ Value of Map 11

Map 9

Fuel level (ℓ , US gal, Imp gal)	10.5, 2.77, 2.31	27, 7.13, 5.94	43, 11.36, 9.46	59.5, 15.72, 13.09
Tank pressure (kPa, mmHg, inHgl)	–1.9, –14.61, –0.6	–1.9, –14.61, –0.6	–1.8, –13.64, –0.5	–1.8, –13.13, –0.5

Map 10

Fuel level (ℓ , US gal, Imp gal)	10, 2.64, 2.2	20, 5.28, 4.4	30, 7.93, 6.6	40, 10.57, 8.8	50, 13.21, 11	60, 15.85, 13.2
Time Needed for Diagnosis (ms)	200000	200000	200000	200000	200000	200000

Map 11

Fuel level (ℓ , US gal, Imp gal)	10.5, 2.77, 2.31	27, 7.13, 5.94	43, 11.36, 9.46	59.5, 15.72, 13.09
Tank pressure (kPa, mmHg, inHgl)	1.1, 8.52, 0.3	1.1, 8.52, 0.3	1.3, 10, 0.4	1.3, 10, 0.4

Mode E: (Evaporation occurrence amount calculation)
Calculate the change of tank pressure with the time evpdset (P1) to judge as NG/OK according to the value of P1. (ambiguous determination acceptable).

- **Abnormality Judgment**

Judge as NG when the following conditions are established.

Judgment Value

Malfunction Criteria	Threshold Value
P1	< Value of Map 12

Map 12 Malfunction criteria limit for evaporation diagnosis

Time (evpdset) vs Fuel level	40000 ms	60000 ms	105000 ms	110000 ms	140000 ms	160000 ms	180000 ms	200000 ms
10.5 ℓ (2.77 US gal, 2.31 Imp gal)	0 kPa (0.00 mmHg, 0 inHg)	0.1 kPa (0.70 mmHg, 0 inHg)	0.3 kPa (2.18 mmHg, 0.1 inHg)	0.3 kPa (2.23 mmHg, 0.1 inHg)	0.3 kPa (2.53 mmHg, 0.1 inHg)	0.4 kPa (2.72 mmHg, 0.1 inHg)	0.4 kPa (2.90 mmHg, 0.1 inHg)	0.4 kPa (2.90 mmHg, 0.1 inHg)
27 ℓ (7.13 US gal, 5.94 Imp gal)	0 kPa (0.00 mmHg, 0 inHg)	0.2 kPa (1.81 mmHg, 0.1 inHg)	0.3 kPa (2.46 mmHg, 0.1 inHg)	0.3 kPa (2.53 mmHg, 0.1 inHg)	0.4 kPa (2.90 mmHg, 0.1 inHg)	0.4 kPa (2.90 mmHg, 0.1 inHg)	0.4 kPa (2.90 mmHg, 0.1 inHg)	0.4 kPa (2.90 mmHg, 0.1 inHg)
43 ℓ (11.36 US gal, 9.46 Imp gal)	0 kPa (0.00 mmHg, 0 inHg)	0.2 kPa (1.53 mmHg, 0.1 inHg)	0.3 kPa (2.49 mmHg, 0.1 inHg)	0.3 kPa (2.60 mmHg, 0.1 inHg)	0.3 kPa (2.60 mmHg, 0.1 inHg)	0.3 kPa (2.60 mmHg, 0.1 inHg)	0.3 kPa (2.60 mmHg, 0.1 inHg)	0 kPa (0.00 mmHg, 0 inHg)
59.5 ℓ (15.72 US gal, 13.09 Imp gal)	0 kPa (0.00 mmHg, 0 inHg)	0.2 kPa (1.31 mmHg, 0.1 inHg)	0.3 kPa (2.53 mmHg, 0.1 inHg)	0.3 kPa (2.53 mmHg, 0.1 inHg)	0.3 kPa (2.53 mmHg, 0.1 inHg)	0.3 kPa (2.53 mmHg, 0.1 inHg)	0.2 kPa (1.26 mmHg, 0 inHg)	0 kPa (0.00 mmHg, 0 inHg)

Time needed for diagnosis: Value from Map 1 + Value from Map 2 + Value from Map 3 + 0 ms + Value from Map 4 + 0 ms + Value from Map 4 + Value from Map 5

Malfunction Indicator Light Illumination: Illuminates when malfunction occurs in 2 continuous driving cycles.

- **Normality Judgment**

Judge as OK when the following conditions are established.

Judgment Value

Malfunction Criteria	Threshold Value
P1	> Value of Map 13

Map 13 Malfunction criteria limit for evaporation diagnosis

Time (evpdset) vs Fuel level	20000 ms	60000 ms	105000 ms	110000 ms	140000 ms	160000 ms	180000 ms	200000 ms
10.5 ℓ (2.77 US gal, 2.31 Imp gal)	0 kPa (0.00 mmHg, 0 inHg)	0.3 kPa (2.20 mmHg, 0.1 inHg)	0.5 kPa (3.68 mmHg, 0.1 inHg)	0.5 kPa (3.73 mmHg, 0.1 inHg)	0.5 kPa (4.03 mmHg, 0.2 inHg)	0.6 kPa (4.22 mmHg, 0.2 inHg)	0.6 kPa (4.40 mmHg, 0.2 inHg)	0.6 kPa (4.40 mmHg, 0.2 inHg)
27 ℓ (7.13 US gal, 5.94 Imp gal)	0 kPa (0.00 mmHg, 0 inHg)	0.4 kPa (3.31 mmHg, 0.1 inHg)	0.5 kPa (3.96 mmHg, 0.2 inHg)	0.5 kPa (4.03 mmHg, 0.2 inHg)	0.6 kPa (4.40 mmHg, 0.2 inHg)	0.6 kPa (4.40 mmHg, 0.2 inHg)	0.6 kPa (4.40 mmHg, 0.2 inHg)	0.6 kPa (4.40 mmHg, 0.2 inHg)
43 ℓ (11.36 US gal, 9.46 Imp gal)	0 kPa (0.00 mmHg, 0 inHg)	0.4 kPa (3.03 mmHg, 0.1 inHg)	0.5 kPa (3.99 mmHg, 0.2 inHg)	0.5 kPa (4.10 mmHg, 0.2 inHg)	0.5 kPa (4.10 mmHg, 0.2 inHg)	0.5 kPa (4.10 mmHg, 0.2 inHg)	0.5 kPa (4.10 mmHg, 0.2 inHg)	0.2 kPa (1.50 mmHg, 0.1 inHg)
59.5 ℓ (15.72 US gal, 13.09 Imp gal)	0 kPa (0.00 mmHg, 0 inHg)	0.4 kPa (2.81 mmHg, 0.1 inHg)	0.5 kPa (4.03 mmHg, 0.2 inHg)	0.5 kPa (4.03 mmHg, 0.2 inHg)	0.5 kPa (4.03 mmHg, 0.2 inHg)	0.5 kPa (4.03 mmHg, 0.2 inHg)	0.4 kPa (2.76 mmHg, 0.1 inHg)	0.2 kPa (1.50 mmHg, 0.1 inHg)

Time needed for diagnosis: Value from Map 1 + Value from Map 2 + Value from Map 3 + 0 ms + Value from Map 4 + 0 ms + Value from Map 4 + Value from Map 5

BH:DTC P0447 EVAPORATIVE EMISSION CONTROL SYSTEM VENT CONTROL CIRCUIT OPEN

1. OUTLINE OF DIAGNOSIS

Detect open or short circuit of the drain valve.
Judge as NG when the ECM output level differs from the actual terminal level.

2. COMPONENT DESCRIPTION

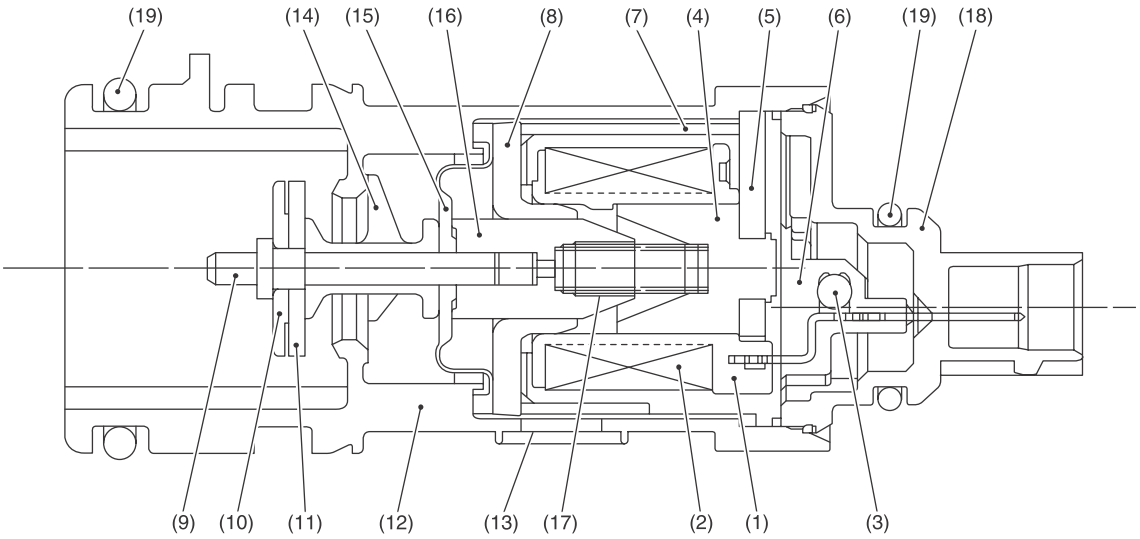

(1) Bobbin
(2) Coil
(3) Diode
(4) Stator core
(5) End plate
(6) Body
(7) Yoke
(8) Magnetic plate
(9) Shaft
(10) Plate
(11) Valve
(12) Housing
(13) Filter
(14) Retainer
(15) Diaphragm
(16) Movable core
(17) Spring
(18) Cover
(19) O-ring

3. ENABLE CONDITION

Secondary Parameters	Enable Conditions
None	

4. GENERAL DRIVING CYCLE

Always perform the diagnosis continuously.

5. DIAGNOSTIC METHOD

• Abnormality Judgment

If the duration of time while the following conditions are met is longer than the time indicated, judge as NG.

Judgment Value

Malfunction Criteria	Threshold Value
Battery voltage	≥ 10.9 V
Elapsed time after starting the engine	≥ 1 second
Terminal output voltage when ECM outputs OFF signal	Low

Time Needed for Diagnosis: 2500 ms
Malfunction Indicator Light Illumination: Illuminates as soon as a malfunction occurs.

• Normality Judgment

Judge as OK and clear the NG if the continuous time while the following conditions are established is more than the predetermined time.

Judgment Value

Malfunction Criteria	Threshold Value
Battery voltage	≥ 10.9 V
Elapsed time after starting the engine	≥ 1 second
Terminal output voltage when ECM outputs OFF signal	High

Time Needed for Diagnosis: Less than 1 second

BI: DTC P0448 EVAPORATIVE EMISSION CONTROL SYSTEM VENT CONTROL CIRCUIT SHORTED

1. OUTLINE OF DIAGNOSIS

Detect open or short circuit of the drain valve.
Judge as NG when the ECM output level differs from the actual terminal level.

2. COMPONENT DESCRIPTION

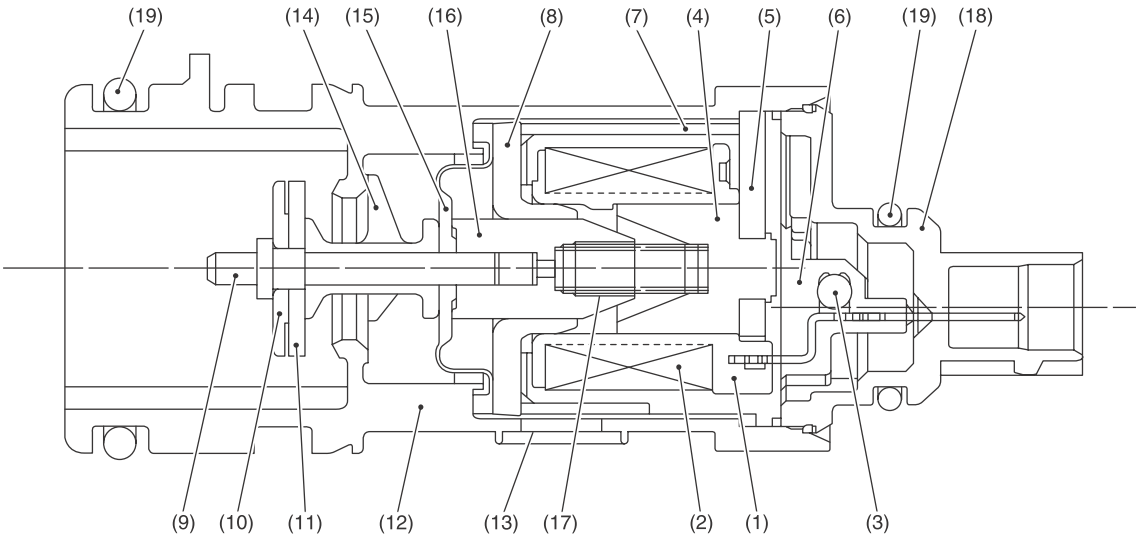

(1) Bobbin
(2) Coil
(3) Diode
(4) Stator core
(5) End plate
(6) Body
(7) Yoke
(8) Magnetic plate
(9) Shaft
(10) Plate
(11) Valve
(12) Housing
(13) Filter
(14) Retainer
(15) Diaphragm
(16) Movable core
(17) Spring
(18) Cover
(19) O-ring

3. ENABLE CONDITION

Secondary Parameters	Enable Conditions
None	

4. GENERAL DRIVING CYCLE

Always perform the diagnosis continuously.

5. DIAGNOSTIC METHOD

• Abnormality Judgment

If the duration of time while the following conditions are met is longer than the time indicated, judge as NG.

Judgment Value

Malfunction Criteria	Threshold Value
Battery voltage	≥ 10.9 V
Elapsed time after starting the engine	≥ 1 second
Terminal output voltage when ECM outputs ON signal	High

Time Needed for Diagnosis: 2500 ms
Malfunction Indicator Light Illumination: Illuminates as soon as a malfunction occurs.

• Normality Judgment

Judge as OK and clear the NG if the continuous time while the following conditions are established is more than the predetermined time.

Judgment Value

Malfunction Criteria	Threshold Value
Battery voltage	≥ 10.9 V
Elapsed time after starting the engine	≥ 1 second
Terminal output voltage when ECM outputs ON signal	Low

Time Needed for Diagnosis: Less than 1 second

BJ:DTC P0451 EVAPORATIVE EMISSION CONTROL SYSTEM PRESSURE SENSOR

1. OUTLINE OF DIAGNOSIS

Detect the tank pressure sensor output property abnormality.
Judge as NG when there is no pressure variation, which should exist in the tank, considering the engine status.

2. COMPONENT DESCRIPTION

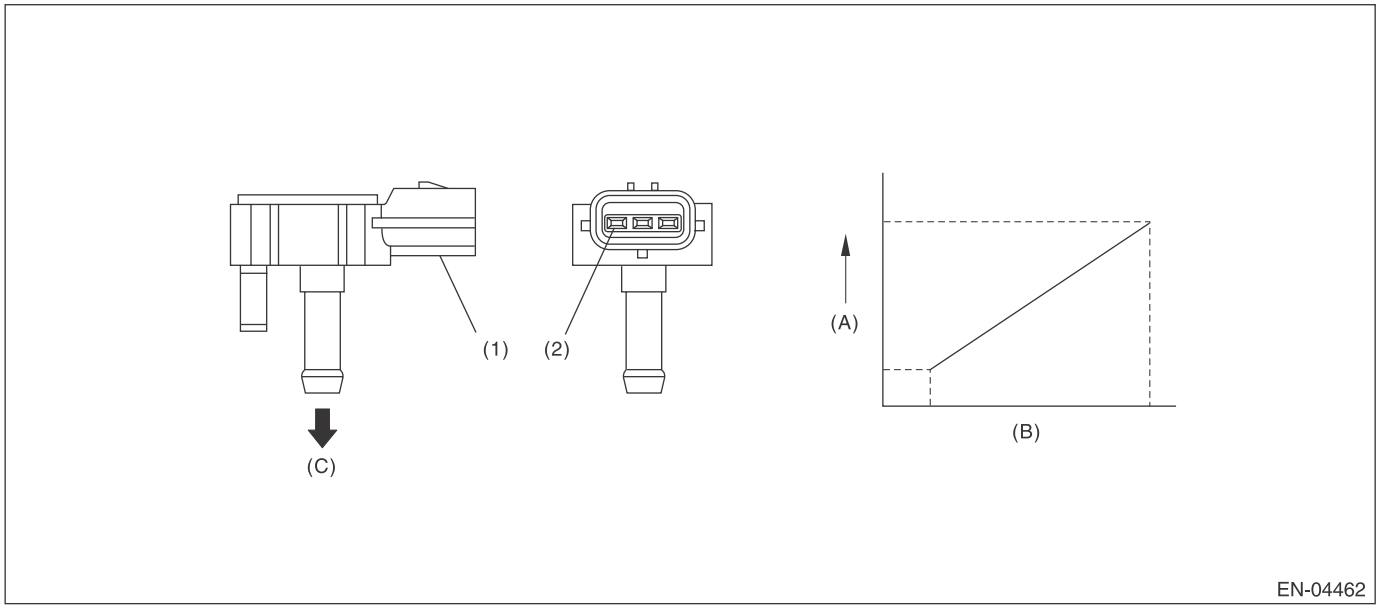

(A) Output voltage
(B) Input voltage
(C) To fuel tank
(1) Connector
(2) Terminals

3. ENABLE CONDITION

Secondary Parameters	Enable Conditions
Elapsed time after starting the engine	≥ 60 s
Fuel level	≥ 9.6 ℓ (2.54 US gal, 2.11 Imp gal)
Fuel temperature	< 35 °C (95 °F)
Battery voltage	≥ 10.9 V
Barometric pressure	≥ 75 kPa (563 mmHg, 22.2 inHg)

4. GENERAL DRIVING CYCLE

- Perform the diagnosis continuously after 60 s have passed since the engine started.
- Pay attention to the fuel level and temperature.

5. DIAGNOSTIC METHOD

• Abnormality Judgment

If the duration of time while the following conditions are met is longer than the time indicated, judge as NG.

Judgment Value

Malfunction Criteria	Threshold Value
Number of times that the difference between the Max. fuel level every 60 s and Min. fuel level every 60 s is 2 ℓ (0.53 US gal, 0.44 Imp gal) or more (with enable condition established)	≥ 16 time(s)
Maximum – Minimum tank pressure (with enable condition completed)	< 0 kPa (0.375 mmHg, 0 inHg)
Maximum – Minimum fuel temperature (with enable condition completed)	≥ 7 °C (44.6 °F)

If the difference between the Max. fuel level every 60 s and Min. fuel level every 60 s is less than 2 ℓ (0.53 US gal, 0.44 Imp gal), extend 60 s and make judgment with the Max. and Min. values for the fuel level in 60 s × 2. 60 s If a difference does not appear, extend the time (60 s × 3, 60 s × 4, 60 s × 5) and continue the judgment. If the difference between the Max. fuel level every 60 s and Min. fuel level every 60 s is 2 ℓ (0.53 US gal, 0.44 Imp gal) or more, the diagnosis counter counts up.

Time Needed for Diagnosis: 60 s × 16 time(s) or more

Malfunction Indicator Light Illumination: Illuminates when malfunction occurs in 2 continuous driving cycles.

• Normality Judgment

Judge as OK and clear the NG if the continuous time while the following conditions are established is more than the predetermined time.

Judgment Value

Malfunction Criteria	Threshold Value
Maximum — Minimum tank pressure	≥ 0 kPa (0.375 mmHg, 0 inHg)

Time Needed for Diagnosis: Less than 1 second

BK:DTC P0452 EVAPORATIVE EMISSION CONTROL SYSTEM PRESSURE SENSOR LOW INPUT

1. OUTLINE OF DIAGNOSIS

Detect the open or short circuit of the fuel tank pressure sensor.
Judge as NG if out of specification.

2. COMPONENT DESCRIPTION

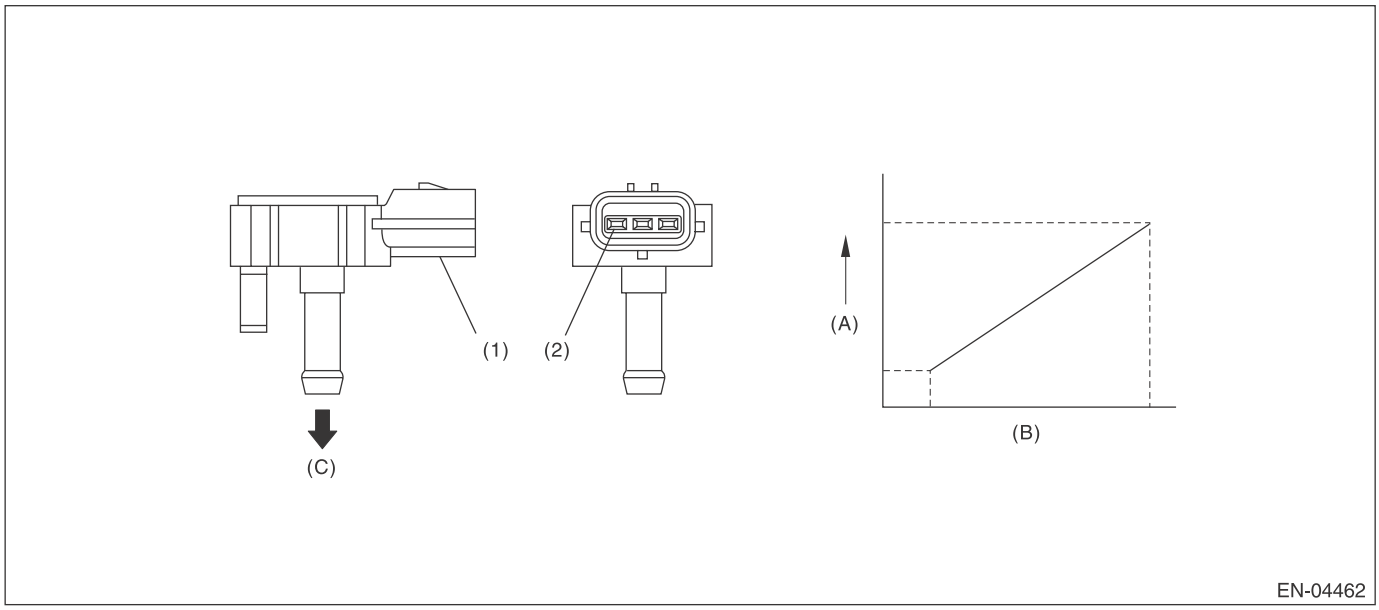

(A) Output voltage
(B) Input voltage
(C) To fuel tank
(1) Connector
(2) Terminals

3. ENABLE CONDITION

Secondary Parameters	Enable Conditions
None	

4. GENERAL DRIVING CYCLE

Always perform the diagnosis continuously.

5. DIAGNOSTIC METHOD

• Abnormality Judgment

If the duration of time while the following conditions are met is longer than the time indicated, judge as NG.

Judgment Value

Malfunction Criteria	Threshold Value
Fuel tank pressure	< –7.4 kPa (–55.6 mmHg, –2.2 inHg)
Battery voltage	≥ 10.9 V

Time Needed for Diagnosis: 15000 ms
Malfunction Indicator Light Illumination: Illuminates as soon as a malfunction occurs.

• Normality Judgment

Judge as OK and clear the NG if the continuous time while the following conditions are established is more than the predetermined time.

Judgment Value

Malfunction Criteria	Threshold Value
Fuel tank pressure	≥ –7.4 kPa (–55.6 mmHg, –2.2 inHg)
Battery voltage	≥ 10.9 V

Time Needed for Diagnosis: Less than 1 second

BL:DTC P0453 EVAPORATIVE EMISSION CONTROL SYSTEM PRESSURE SENSOR HIGH INPUT

1. OUTLINE OF DIAGNOSIS

Detect the open or short circuit of the fuel tank pressure sensor.
Judge as NG if out of specification.

2. COMPONENT DESCRIPTION

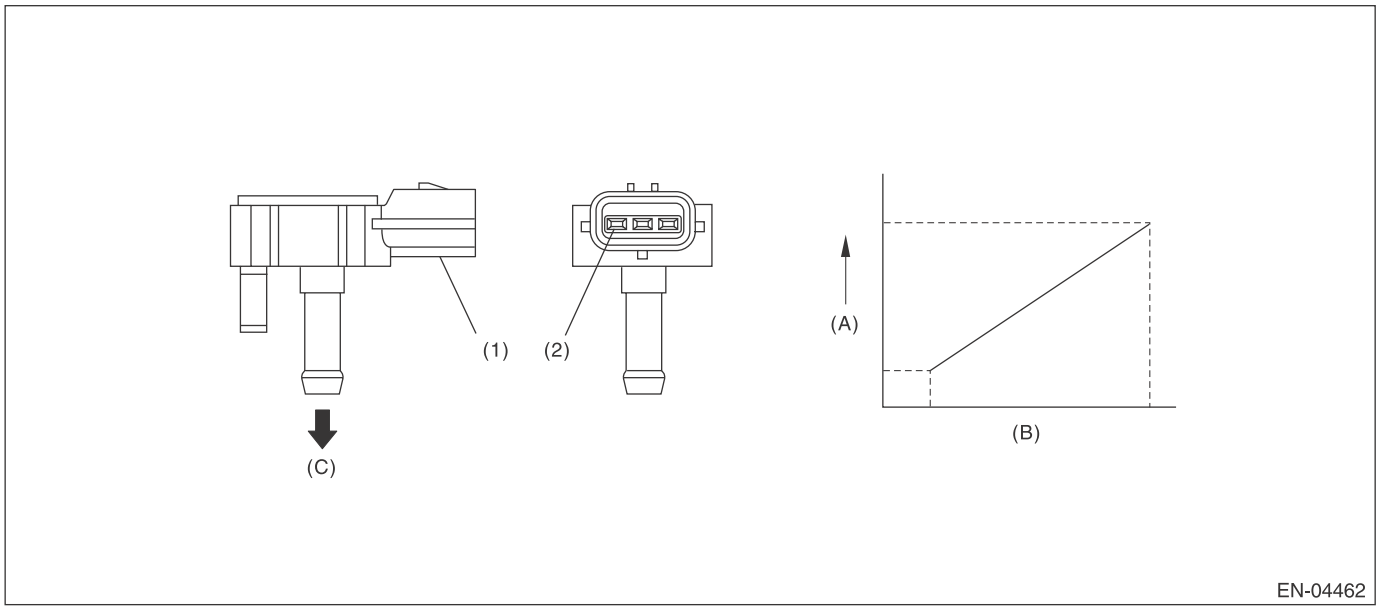

(A) Output voltage
(B) Input voltage
(C) To fuel tank
(1) Connector
(2) Terminals

3. ENABLE CONDITION

Secondary Parameters	Enable Conditions
Time needed for all secondary parameters to be in enable conditions	≥ 5000 ms
Vehicle speed	≥ 2 km/h (1.2 MPH)
All conditions of EVAP canister purge	Completed
Learning value of evaporation gas concentration (left and right)	< 0.08
Main feedback compensation coefficient (left and right)	≥ 0.9
Battery voltage	≥ 10.9 V

4. GENERAL DRIVING CYCLE

Perform the diagnosis when purging enable conditions are met without idling.

5. DIAGNOSTIC METHOD

• Abnormality Judgment

If the duration of time while the following conditions are met is longer than the time indicated, judge as NG.

Judgment Value

Malfunction Criteria	Threshold Value
Fuel tank pressure	≥ 7.9 kPa (59.6 mmHg, 2.3 inHg)
Fuel temperature	< 35 °C (95 °F)
Atmospheric pressure	≥ 75 kPa (563 mmHg, 22.2 inHg)

Time Needed for Diagnosis: 15000 ms
Malfunction Indicator Light Illumination: Illuminates as soon as a malfunction occurs.

• Normality Judgment

Judge as OK and clear the NG if the continuous time while the following conditions are established is more than the predetermined time.

Judgment Value

Malfunction Criteria	Threshold Value
Fuel tank pressure	< 7.9 kPa (59.6 mmHg, 2.3 inHg)

Time Needed for Diagnosis: Less than 1 second

BM:DTC P0456 EVAPORATIVE EMISSION CONTROL SYSTEM LEAK DETECTED (VERY SMALL LEAK)

1. OUTLINE OF DIAGNOSIS

NOTE:
For the detection standard, refer to DTC P0442. <Ref. to GD(H4SO)-105, DTC P0442 EVAPORATIVE EMISSION CONTROL SYSTEM LEAK DETECTED (SMALL LEAK), Diagnostic Trouble Code (DTC) Detecting Criteria.>

BN:DTC P0457 EVAPORATIVE EMISSION CONTROL SYSTEM LEAK DETECTED (FUEL CAP LOOSE/OFF)

1. OUTLINE OF DIAGNOSIS

NOTE:
For the detection standard, refer to DTC P0442. <Ref. to GD(H4SO)-105, DTC P0442 EVAPORATIVE EMISSION CONTROL SYSTEM LEAK DETECTED (SMALL LEAK), Diagnostic Trouble Code (DTC) Detecting Criteria.>

BO:DTC P0458 EVAPORATIVE EMISSION SYSTEM PURGE CONTROL VALVE CIRCUIT LOW

1. OUTLINE OF DIAGNOSIS

Detect open or short circuit of the purge control solenoid valve.
Judge as NG when the ECM output level differs from the actual terminal level.

2. COMPONENT DESCRIPTION

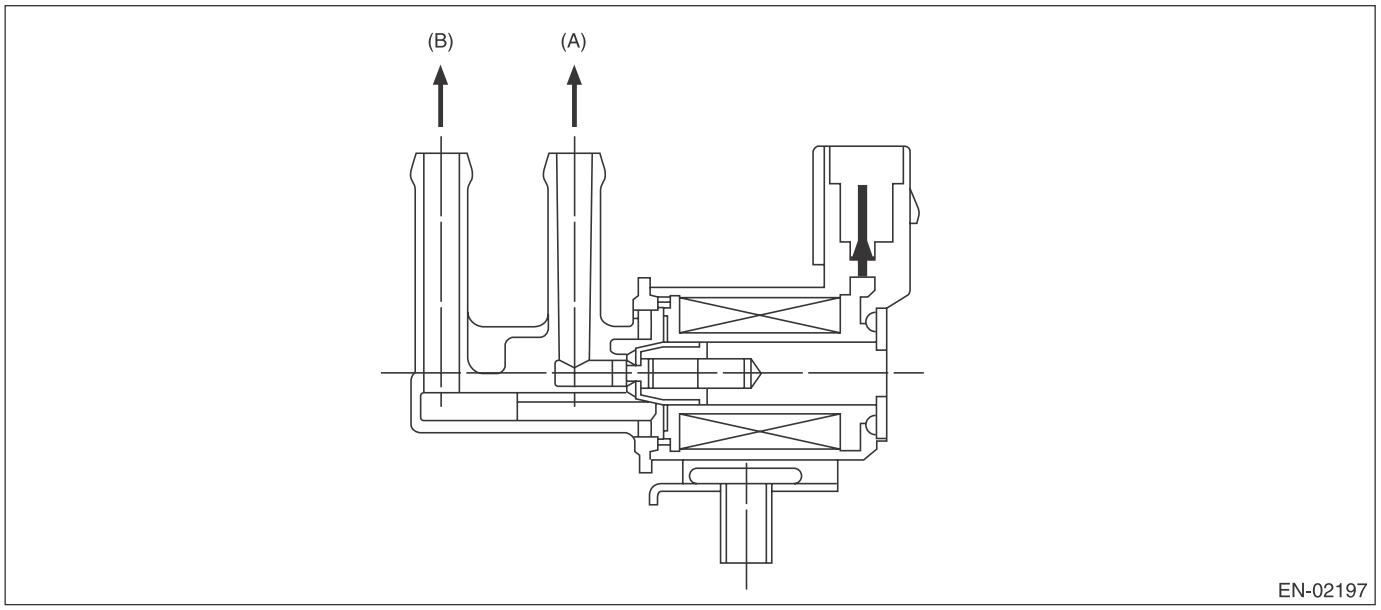

(A) To canister
(B) To intake manifold

3. ENABLE CONDITION

Secondary Parameters	Enable Conditions
Battery voltage	≥ 10.9 V
Elapsed time after starting the engine	≥ 1 second

4. GENERAL DRIVING CYCLE

Always perform the diagnosis after starting the engine.

5. DIAGNOSTIC METHOD

- **Abnormality Judgment**

If the duration of time while the following conditions are met is longer than the time indicated, judge as NG.

Judgment Value

Malfunction Criteria	Threshold Value
Duty ratio of “ON”	< 0.75
Terminal output voltage	Low

Time Needed for Diagnosis: 2500 ms
Malfunction Indicator Light Illumination: Illuminates when malfunction occurs in 2 continuous driving cycles.

- **Normality Judgment**

Judge as OK and clear the NG if the continuous time while the following conditions are established is more than the predetermined time.

Judgment Value

Malfunction Criteria	Threshold Value
Terminal output voltage	High

Time Needed for Diagnosis: Less than 1 second

BP:DTC P0459 EVAPORATIVE EMISSION SYSTEM PURGE CONTROL VALVE CIRCUIT HIGH

1. OUTLINE OF DIAGNOSIS

Detect open or short circuit of the purge control solenoid valve.
Judge as NG when the ECM output level differs from the actual terminal level.

2. COMPONENT DESCRIPTION

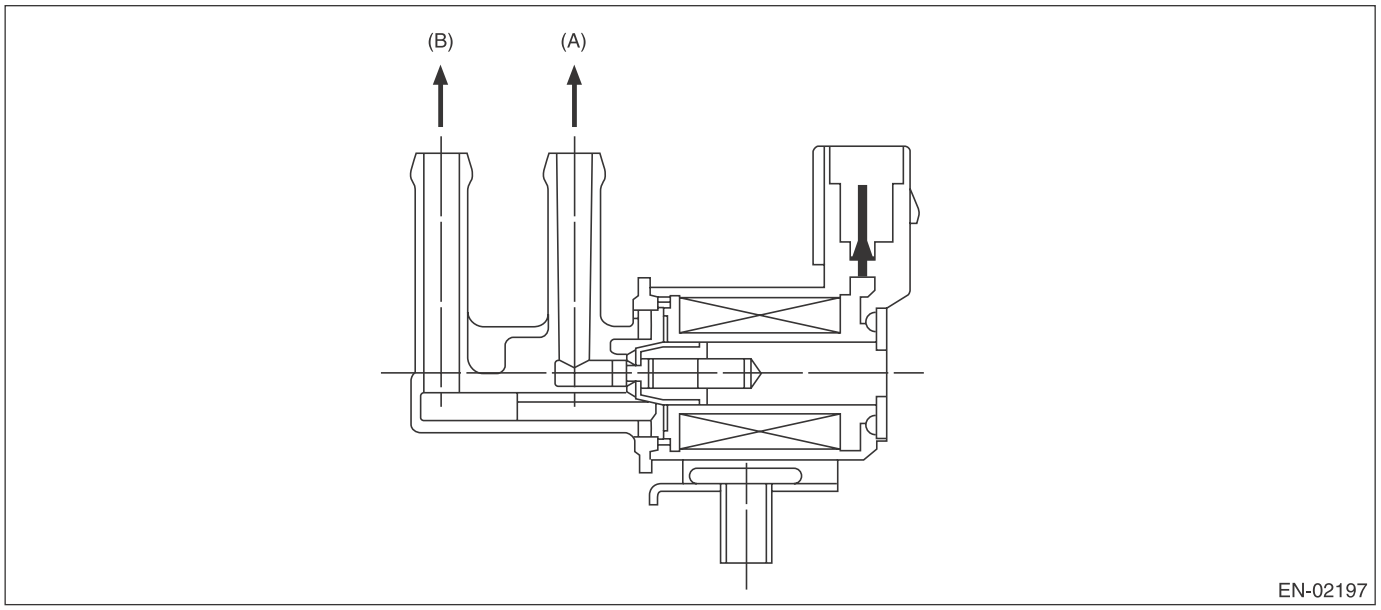

(A) To canister
(B) To intake manifold

3. ENABLE CONDITION

Secondary Parameters	Enable Conditions
Battery voltage	≥ 10.9 V
Elapsed time after starting the engine	≥ 1 second

4. GENERAL DRIVING CYCLE

Always perform the diagnosis after starting the engine.

5. DIAGNOSTIC METHOD

- **Abnormality Judgment**

If the duration of time while the following conditions are met is longer than the time indicated, judge as NG.

Judgment Value

Malfunction Criteria	Threshold Value
Duty ratio of "ON"	≥ 0.25
Terminal output voltage	High

Time Needed for Diagnosis: 2500 ms
Malfunction Indicator Light Illumination: Illuminates when malfunction occurs in 2 continuous driving cycles.

- **Normality Judgment**

Judge as OK and clear the NG if the continuous time while the following conditions are established is more than the predetermined time.

Judgment Value

Malfunction Criteria	Threshold Value
Terminal output voltage	Low

Time Needed for Diagnosis: Less than 1 second

BQ:DTC P0461 FUEL LEVEL SENSOR “A” CIRCUIT RANGE/PERFORMANCE

1. OUTLINE OF DIAGNOSIS

Detect malfunctions of the fuel level sensor output property.
If the fuel level does not vary in a particular driving condition / engine condition where it should, judge as NG.

2. COMPONENT DESCRIPTION

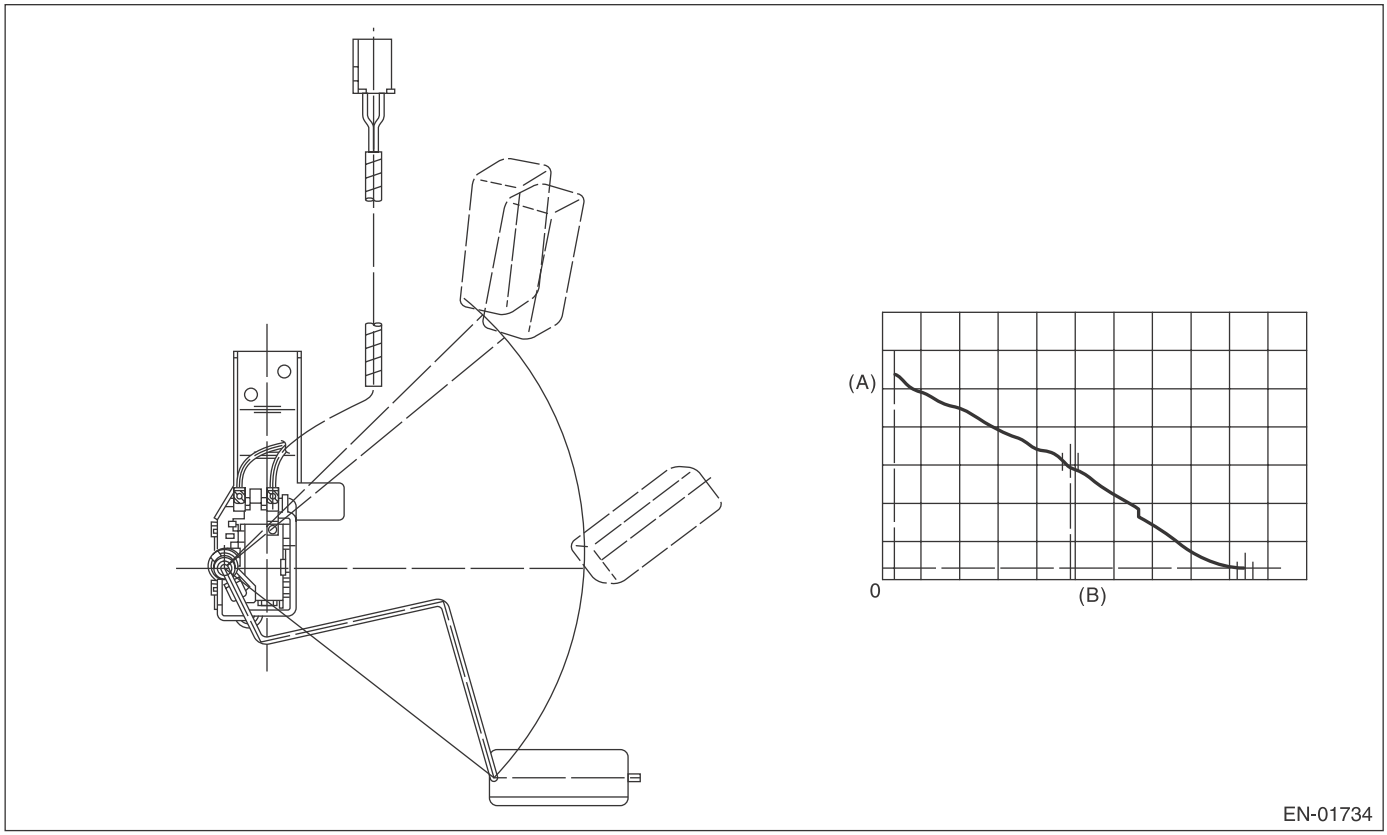

(A) Fuel level (B) Resistance

3. ENABLE CONDITION

Secondary Parameters	Enable Conditions
None	

4. GENERAL DRIVING CYCLE

Always perform the diagnosis continuously.

5. DIAGNOSTIC METHOD

• Abnormality Judgment

Judge as NG when the following conditions are established.

Judgment Value

Malfunction Criteria	Threshold Value
Accumulated amount of intake air	≥ 330957 g (11672.85 oz)
Max. – min. values of fuel level output	< 2.6 ℓ (0.69 US gal, 0.57 Imp gal)
Battery voltage	≥ 10.9 V
Engine speed	< 4000 rpm
Elapsed time after starting the engine	≥ 5000 ms

Time Needed for Diagnosis: Less than 1 second
Malfunction Indicator Light Illumination: Illuminates when malfunction occurs in 2 continuous driving cycles.

• Normality Judgment

Judge as OK and clear the NG if the following conditions are established.

Judgment Value

Malfunction Criteria	Threshold Value
Accumulated amount of intake air	≥ 330957 g (11672.85 oz)
Max. – min. values of fuel level output	≥ 2.6 ℓ (0.69 US gal, 0.57 Imp gal)
Battery voltage	≥ 10.9 V
Engine speed	< 4000 rpm
Elapsed time after starting the engine	≥ 5000 ms

Time Needed for Diagnosis: Less than 1 second

BR:DTC P0462 FUEL LEVEL SENSOR “A” CIRCUIT LOW

1. OUTLINE OF DIAGNOSIS

Detect the open or short circuit of fuel level sensor. Judge as NG if out of specification.

2. COMPONENT DESCRIPTION

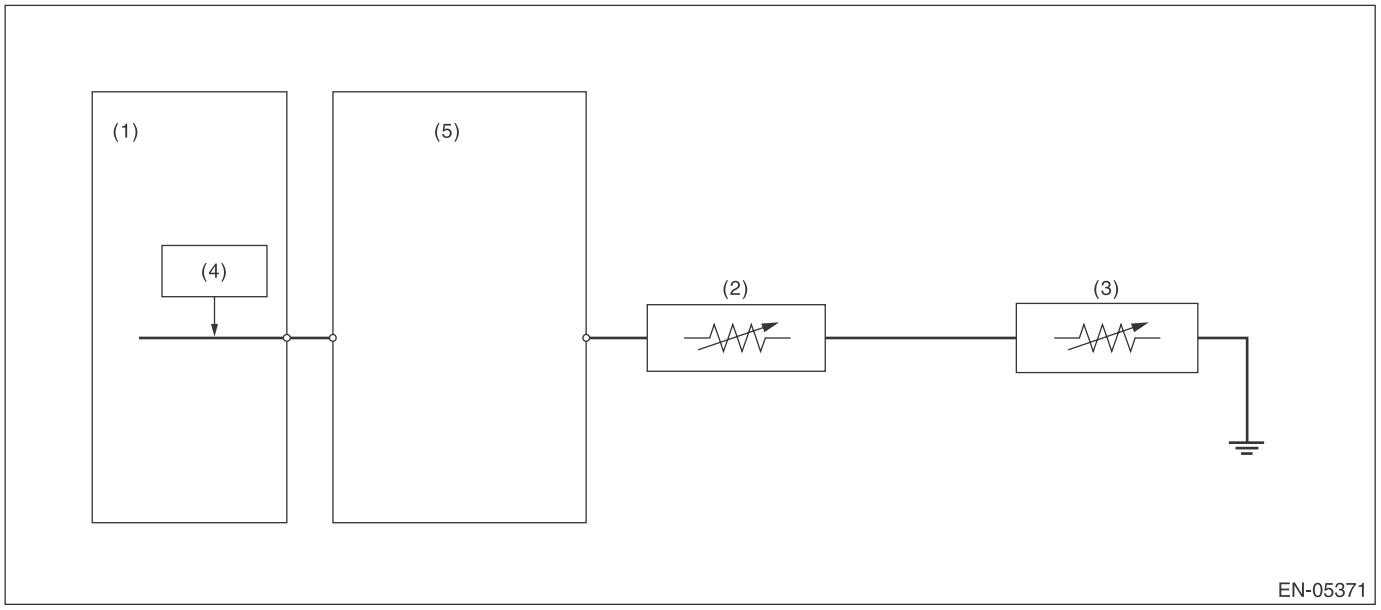

(1) Engine control module (ECM)
(2) Fuel level sensor
(3) Fuel sub level sensor
(4) Detecting circuit
(5) Body integrated unit

3. ENABLE CONDITION

Secondary Parameters	Enable Conditions
None	

4. GENERAL DRIVING CYCLE

Always perform the diagnosis continuously.

5. DIAGNOSTIC METHOD

• Abnormality Judgment

If the duration of time while the following conditions are met is longer than the time indicated, judge as NG.

Judgment Value

Malfunction Criteria	Threshold Value
Battery voltage	≥ 10.9 V
Elapsed time after starting the engine	≥ 3000 ms
Output voltage	< 0.173 V

Time Needed for Diagnosis: 2500 ms
Malfunction Indicator Light Illumination: Illuminates when malfunction occurs in 2 continuous driving cycles.

• Normality Judgment

Judge as OK and clear the NG if the continuous time while the following conditions are established is more than the predetermined time.

Judgment Value

Malfunction Criteria	Threshold Value
Battery voltage	≥ 10.9 V
Elapsed time after starting the engine	≥ 3000 ms
Output voltage	≥ 0.173 V

Time Needed for Diagnosis: Less than 1 second

BS:DTC P0463 FUEL LEVEL SENSOR “A” CIRCUIT HIGH

1. OUTLINE OF DIAGNOSIS

Detect the open or short circuit of fuel level sensor. Judge as NG if out of specification.

2. COMPONENT DESCRIPTION

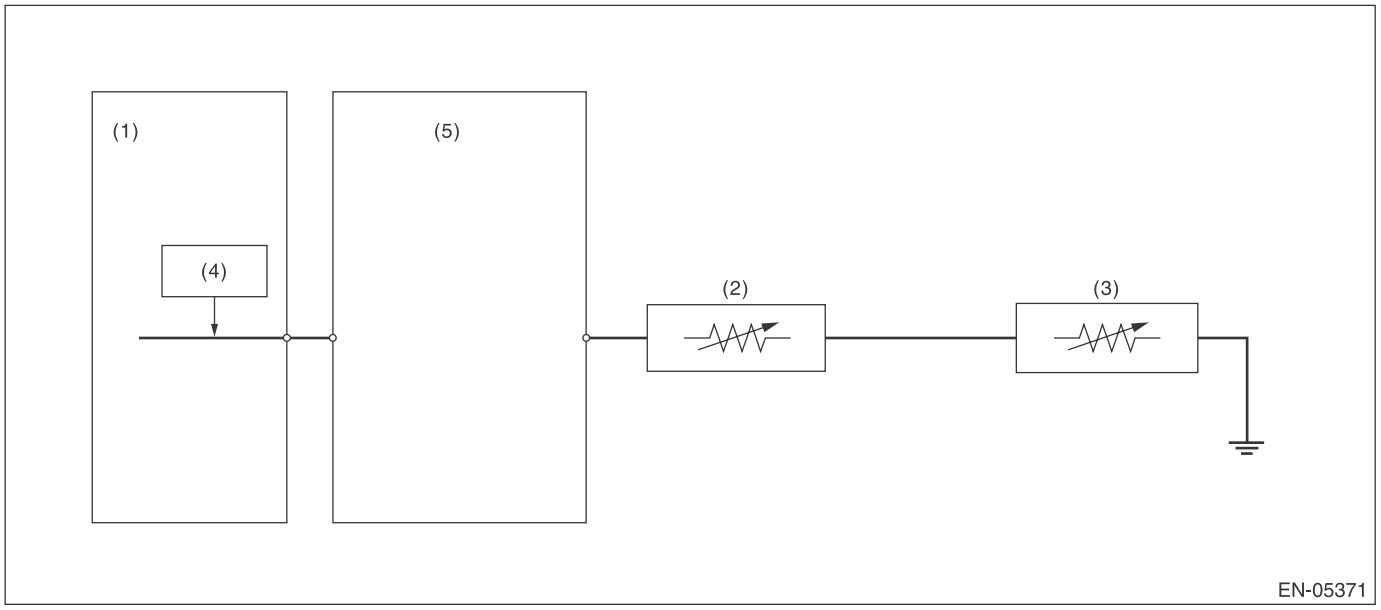

(1) Engine control module (ECM)
(2) Fuel level sensor
(3) Fuel sub level sensor
(4) Detecting circuit
(5) Body integrated unit

3. ENABLE CONDITION

Secondary Parameters	Enable Conditions
None	

4. GENERAL DRIVING CYCLE

Always perform the diagnosis continuously.

5. DIAGNOSTIC METHOD

• Abnormality Judgment

If the duration of time while the following conditions are met is longer than the time indicated, judge as NG.

Judgment Value

Malfunction Criteria	Threshold Value
Battery voltage	≥ 10.9 V
Elapsed time after starting the engine	≥ 3000 ms
Output voltage	≥ 7.212 V

Time Needed for Diagnosis: 1000 ms
Malfunction Indicator Light Illumination: Illuminates when malfunction occurs in 2 continuous driving cycles.

• Normality Judgment

Judge as OK and clear the NG if the continuous time while the following conditions are established is more than the predetermined time.

Judgment Value

Malfunction Criteria	Threshold Value
Battery voltage	≥ 10.9 V
Elapsed time after starting the engine	≥ 3000 ms
Output voltage	< 7.212 V

Time Needed for Diagnosis: Less than 1 second

BT:DTC P0464 FUEL LEVEL SENSOR CIRCUIT INTERMITTENT

1. OUTLINE OF DIAGNOSIS

Detect the unstable output faults from the fuel level sensor caused by noise. Judge as NG when the max. value and cumulative value of output voltage variation of the fuel level sensor is larger than the threshold value.

2. ENABLE CONDITION

Malfunction Criteria	Threshold Value
Engine speed	≥ 500 rpm
Elapsed time after starting the engine	≥ 1 second
Battery voltage	≥ 10.9 V
Idle switch	ON
Fuel level	≥ 10.5 ℓ (2.77 US gal, 2.31 Imp gal) and < 59.5 ℓ (15.72 US gal, 13.09 Imp gal)
Vehicle speed = 0 km/h (0 MPH)	≥ 10000 ms

3. GENERAL DRIVING CYCLE

- Always perform the diagnosis continuously at idle speed.
- Pay attention to the fuel level.

4. DIAGNOSTIC METHOD

Calculate the Max. value (DELFLMAX) and cumulative value (SUMFL) of output voltage variation of fuel level sensor during 12.2 seconds. Judge it normal when both max. and cumulative values are not over the threshold value. Otherwise, when either of them is over the threshold value, the diagnosis counter counts up. Judge as NG if the counter indicated 4 time(s).

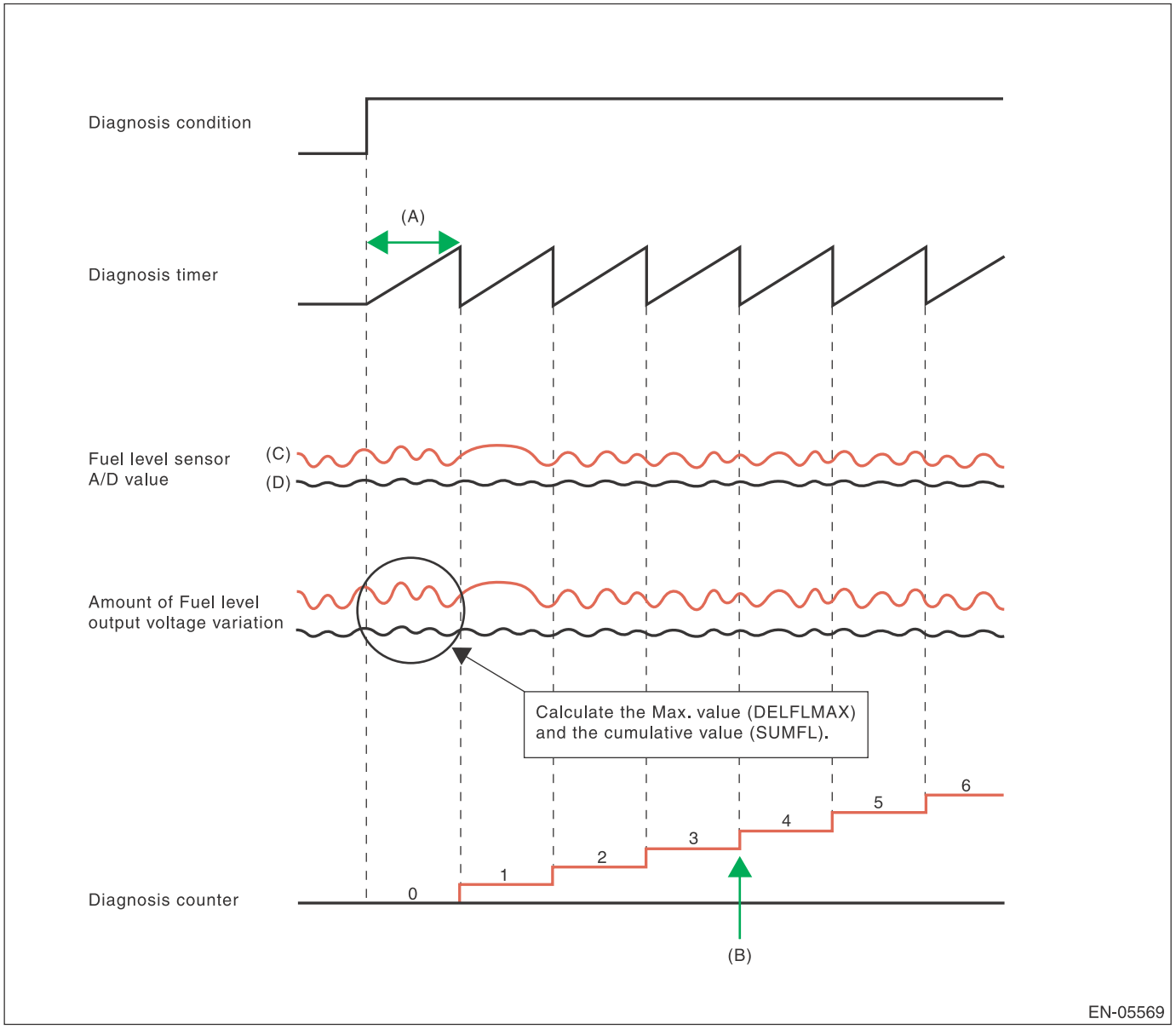

(A) 12288 ms
(B) NG at 4 time(s) counts
(C) Malfunction
(D) Normal

- **Abnormality Judgment**

If the duration of time while the following conditions are met is longer than the time indicated, judge as NG.

Judgment Value

Malfunction Criteria	Threshold Value
Integrated times of the condition reaching follows,	≥ 4 time(s)
DELFLMAX	≥ Value from Map
or	
SUMFL	≥ 23.8 V
At this time,	
DELFLMAX: Maximum difference of sensor output for 12288 ms	
SUMFL: Integrated value of the sensor output deviation for12288 ms	

Map

Fuel level (ℓ , US gal, Imp gal)	10, 2.64, 2.2	20, 5.28, 4.4	25, 6.61, 5.5	30, 7.93, 6.6	43, 11.36, 9.46	45, 11.89, 9.9	50, 13.21, 11
Measured voltage (V)	0.248	0.519	0.796	0.6	1.025	1.069	1.402

The diagnosis counter does not count up when the following conditions are completed within 12288 ms.

Maximum value – minimum value of change of tank pressure during 12288 ms	≥ 0 kPa (0.375 mmHg, 0 inHg)
Maximum value – minimum value of battery voltage during 12288 ms	≥ 1.09 V

Time Needed for Diagnosis: 12288 ms × 4 time(s)
Malfunction Indicator Light Illumination: Illuminates when malfunction occurs in 2 continuous driving cycles.

- **Normality Judgment**

Judge as OK and clear the NG if the continuous time while the following conditions are established is more than the predetermined time.

Judgment Value

Malfunction Criteria	Threshold Value
DELFLMAX	< Value from Map
SUMFL	< 23.8 V
At this time,	
DELFLMAX: Maximum difference of sensor output for 12288 ms	
SUMFL: Integrated value of the sensor output deviation for12288 ms	

Time Needed for Diagnosis: 12288 ms

BU:DTC P0500 VEHICLE SPEED SENSOR “A”

1. OUTLINE OF DIAGNOSIS

Judge as NG when outside of the judgment value.
Judge NG when the received data from VDCCM&H/U is abnormal vehicle speed, and the vehicle speed data is impossible.

2. COMPONENT DESCRIPTION

Vehicle speed signals are taken in to the VDC control module and hydraulic control unit, and normal/erroneous data of the ABS wheel speed sensor is received by CAN communication from the VDC control module and hydraulic control unit.

3. ENABLE CONDITION

Secondary Parameters	Enable Conditions
Battery voltage	≥ 10.9 V
Elapsed time after starting the engine	≥ 2000 ms

4. GENERAL DRIVING CYCLE

Always perform diagnosis more than 2000 ms after starting the engine.

5. DIAGNOSTIC METHOD

- **Abnormality Judgment**

If the duration of time while the following conditions are met is longer than the time indicated, judge as NG.

Judgment Value

Malfunction Criteria	Threshold Value
Front ABS wheel speed sensor status	Malfunction
Either of the following is established	
Front left wheel speed	≥ 300 km/h (186.4 MPH)
Front right wheel speed	≥ 300 km/h (186.4 MPH)

Time Needed for Diagnosis: 2500 ms
Malfunction Indicator Light Illumination: Illuminates as soon as a malfunction occurs.

- **Normality Judgment**

Judge as OK and clear the NG if the continuous time while the following conditions are established is more than the predetermined time.

Judgment Value

Malfunction Criteria	Threshold Value
Front left wheel speed	> 0 km/h (0 MPH) and < 300 km/h (186.4 MPH)
Front right wheel speed	> 0 km/h (0 MPH) and < 300 km/h (186.4 MPH)

Time Needed for Diagnosis: 2500 ms

BV:DTC P0506 IDLE AIR CONTROL SYSTEM RPM LOWER THAN EXPECTED

1. OUTLINE OF DIAGNOSIS

Detect the malfunction that actual engine speed is not close to target engine speed during idling. Judge as NG when actual engine speed is not close to target engine speed during idling.

2. ENABLE CONDITION

Secondary Parameters	Enable Conditions
Engine coolant temperature	≥ 75 °C (167 °F)
Battery voltage	≥ 10.9 V
Atmospheric pressure	≥ 75 kPa (563 mmHg, 22.2 inHg)
Fuel level	≥ 9.6 ℓ (2.54 US gal, 2.11 Imp gal)
Elapsed time after starting the engine	≥ 10.49 s
Feedback of ISC	In operation
Lambda value (left and right)	≥ 0.81 and < 1.1
After switching air conditioner to ON/OFF	≥ 5.1 s
After intake manifold pressure changes by 4 kPa (30 mmHg, 1.2 inHg) or more.	> 5.1 s
Elapsed time after switching neutral position switch to ON/OFF	> 5.1 s
Vehicle speed	0 km/h (0 MPH)

3. GENERAL DRIVING CYCLE

Perform the diagnosis continuously at idling after warming up engine.

4. DIAGNOSTIC METHOD

- **Abnormality Judgment**

If the duration of time while the following conditions are met is longer than the time indicated, judge as NG.

Judgment Value

Malfunction Criteria	Threshold Value
Actual engine speed — Targeted engine speed	< –100 rpm
Feedback compensation for ISC	Max.

Time Needed for Diagnosis: 10 s × 3 time(s)
Malfunction Indicator Light Illumination: Illuminates when malfunction occurs in 2 continuous driving cycles.

- **Normality Judgment**

Judge as OK and clear the NG if the continuous time while the following conditions are established is more than the predetermined time.

Judgment Value

Malfunction Criteria	Threshold Value
Actual engine speed — Targeted engine speed	≥ –100 rpm

Time Needed for Diagnosis: 10 s

BW:DTC P0507 IDLE AIR CONTROL SYSTEM RPM HIGHER THAN EXPECTED

1. OUTLINE OF DIAGNOSIS

Detect the malfunction that actual engine speed is not close to target engine speed during idling. Judge as NG when actual engine speed is not close to target engine speed during idling.

2. ENABLE CONDITION

Secondary Parameters	Enable Conditions
Engine coolant temperature	≥ 75 °C (167 °F)
Battery voltage	≥ 10.9 V
Atmospheric pressure	≥ 75 kPa (563 mmHg, 22.2 inHg)
Fuel level	≥ 9.6 ℓ (2.54 US gal, 2.11 Imp gal)
Elapsed time after starting the engine	≥ 10.49 s
Feedback of ISC	In operation
Lambda value (left and right)	≥ 0.81 and < 1.1
After switching air conditioner to ON/OFF	≥ 5.1 s
After intake manifold pressure changes by 4 kPa (30 mmHg, 1.2 inHg) or more.	> 5.1 s
Elapsed time after switching neutral position switch to ON/OFF	> 5.1 s
Vehicle speed	0 km/h (0 MPH)

3. GENERAL DRIVING CYCLE

Perform the diagnosis continuously at idling after warming up engine.

4. DIAGNOSTIC METHOD

- **Abnormality Judgment**

If the duration of time while the following conditions are met is longer than the time indicated, judge as NG.

Judgment Value

Malfunction Criteria	Threshold Value
Actual – Target engine speed	≥ 200 rpm
Feedback value for ISC	Min.

Time Needed for Diagnosis: 10 s × 3 time(s)
Malfunction Indicator Light Illumination: Illuminates when malfunction occurs in 2 continuous driving cycles.

- **Normality Judgment**

Judge as OK and clear the NG if the continuous time while the following conditions are established is more than the predetermined time.

Judgment Value

Malfunction Criteria	Threshold Value
Actual – Target engine speed	< 200 rpm

Time Needed for Diagnosis: 10 s

BX:DTC P0512 STARTER REQUEST CIRCUIT

1. OUTLINE OF DIAGNOSIS

Detect the open or short circuit of starter SW.
Judge as ON NG when the starter SW signal remains ON.

2. ENABLE CONDITION

Secondary Parameters	Enable Conditions
None	

3. GENERAL DRIVING CYCLE

Always perform the diagnosis continuously.

4. DIAGNOSTIC METHOD

- **Abnormality Judgment**

If the duration of time while the following conditions are met is longer than the time indicated, judge as NG.

Judgment Value

Malfunction Criteria	Threshold Value
Engine condition	After engine starting
Starter OFF signal	Not detected
Battery voltage	≥ 8 V

Time Needed for Diagnosis: 180000 ms
Malfunction Indicator Light Illumination: Illuminates when malfunction occurs in 2 continuous driving cycles.

- **Normality Judgment**

Judge as OK and clear the NG if the continuous time while the following conditions are established is more than the predetermined time.

Judgment Value

Malfunction Criteria	Threshold Value
Starter OFF signal	Detected
Battery voltage	≥ 8 V

Time Needed for Diagnosis: Less than 1 second

BY:DTC P0513 INCORRECT IMMOBILIZER KEY

1. OUTLINE OF DIAGNOSIS

DTC	Item	Outline of Diagnosis
P0513	Incorrect Immobilizer Key	Incorrect immobilizer key (Use of unregistered key in body integrated unit)
P1570	Antenna	Faulty antenna
P1571	Reference Code Incompatibility	Reference code incompatibility between body integrated unit and ECM
P1572	IMM Circuit Failure (Except Antenna Circuit)	Communication failure between body integrated unit and ECM
P1574	Key Communication Failure	Failure of body integrated unit to verify key (transponder) ID code or transponder failure
P1576	EGI Control Module EEPROM	ECM malfunctioning
P1577	IMM Control Module EEPROM	Body integrated unit malfunctioning
P1578	Meter Failure	Reference code incompatibility between body integrated unit and combination meter

2. ENABLE CONDITION

When starting the engine.

3. GENERAL DRIVING CYCLE

Perform the diagnosis only after starting the engine.

4. DIAGNOSTIC METHOD

Judge as NG when the conditions for the outline of the diagnosis of the top are established.

BZ:DTC P0604 INTERNAL CONTROL MODULE RANDOM ACCESS MEMORY (RAM) ERROR

1. OUTLINE OF DIAGNOSIS

Detect the malfunction of microcomputer (RAM).
When there is a problem in the main CPU normal RAM, or the sub CPU normal RAM, judge as NG. Judge as OK when both are operating properly.
If it is possible to write data to the whole area of RAM in the initial routine, and is possible to read the same data, it is judged as OK, and if not, NG.

2. ENABLE CONDITION

Secondary Parameters	Enable Conditions
None	

Diagnosis with the initial routine.

3. GENERAL DRIVING CYCLE

Perform the diagnosis as soon as the ignition switch is turned to ON.

4. DIAGNOSTIC METHOD

Abnormality Judgment

Judge as NG if the criteria below are met.

Judgment Value

Malfunction Criteria	Threshold Value
Main CPU normal RAM abnormal	
Write 5AA5A55A and then read. (Whole area of RAM)	5AA5A55A cannot be read.
Write A55A5AA5 and then read. (Whole area of RAM)	A55A5AA5 cannot be read.
Sub CPU normal RAM abnormal	
Write 5AA5 and then read. (Whole area of RAM)	5AA5 cannot be read.
Write A55A and then read. (Whole area of RAM)	A55A cannot be read.

Time Needed for Diagnosis: Undetermined
Malfunction Indicator Light Illumination: Illuminates as soon as a malfunction occurs.

Normality Judgment

Judge as OK and clear the NG when the malfunction criteria below are met.

Judgment Value

Malfunction Criteria	Threshold Value
Main CPU normal RAM abnormal	
Write 5AA5A55A and then read. (Whole area of RAM)	5AA5A55A can be read.
And write A55A5AA5 and then read. (Whole area of RAM)	A55A5AA5 can be read.
Sub CPU normal RAM abnormal	
Write 5AA5 and then read. (Whole area of RAM)	5AA5 can be read.
And write A55A and then read. (Whole area of RAM)	A55A can be read.

CA:DTC P0605 INTERNAL CONTROL MODULE READ ONLY MEMORY (ROM) ERROR

1. OUTLINE OF DIAGNOSIS

Judge as NG when SUM value of ROM is outside the standard value.

2. ENABLE CONDITION

Secondary Parameters	Enable Conditions
Ignition switch	ON

3. GENERAL DRIVING CYCLE

Always perform the diagnosis continuously.

4. DIAGNOSTIC METHOD

Abnormality Judgment

Judge as NG if the criteria below are met.

Judgment Value

Malfunction Criteria	Threshold Value
SUM value of ROM	Standard

Time Needed for Diagnosis: Undetermined
Malfunction Indicator Light Illumination: Illuminates as soon as a malfunction occurs.

CB:DTC P0607 THROTTLE CONTROL SYSTEM CIRCUIT RANGE/PERFORMANCE

1. OUTLINE OF DIAGNOSIS

Judge as NG when any one of the followings is established.
(1) Monitoring IC operates abnormally. (Monitoring IC malfunction)
(2) Input amplifier circuit of throttle position sensor 1 operates abnormally. (fourfold amplifier malfunction)
(3) CPU operates abnormally. (Instruction/flow check)
(4) A/D converter operates abnormally. (ADC malfunction)
(5) EEPROM operates abnormally. (EEPROM malfunction)
(6) Output IC operates abnormally. (Output driver malfunction)

2. COMPONENT DESCRIPTION

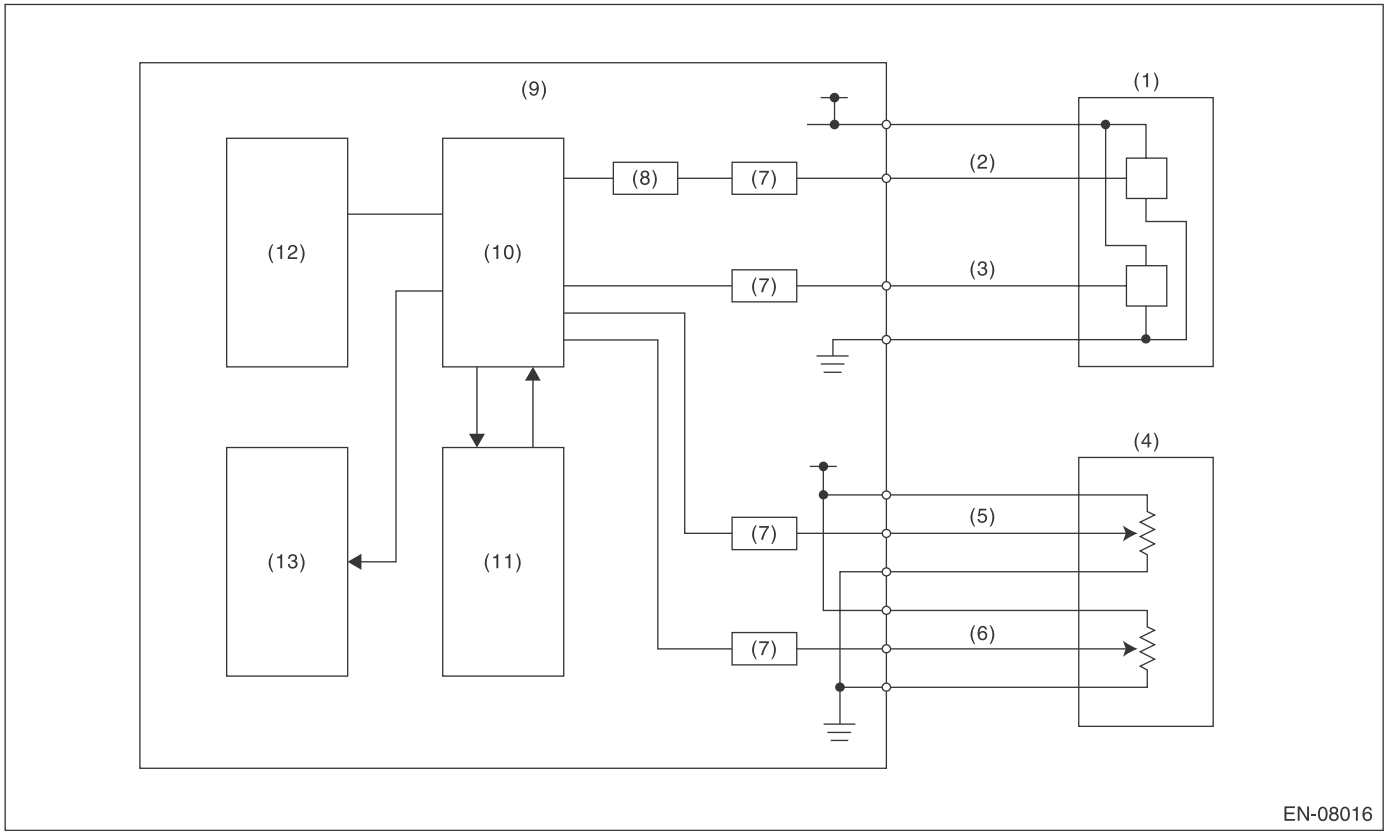

(1)	Throttle position sensor	(6)	Accelerator pedal position sensor 2	(10)	CPU
(2)	Throttle position sensor 1	(7)	I/F circuit	(11)	Monitoring IC
(3)	Throttle position sensor 2	(8)	Amplifier circuit	(12)	EEPROM
(4)	Accelerator pedal position sensor	(9)	Engine control module (ECM)	(13)	Output IC
(5)	Accelerator pedal position sensor 1				

3. ENABLE CONDITION

Secondary Parameters	Enable Conditions
(1) Battery voltage	≥ 6 V
(2) Ignition switch	ON
(2) Battery voltage	≥ 6 V
(3) Ignition switch	ON
(3) ETC control	Permitted
(4) Ignition switch	ON
(4) Battery voltage	≥ 6 V
(5) Starter switch	OFF
(5) Battery voltage	> 6 V
(6) Ignition switch	ON
(6) Battery voltage	≥ 10.9 V

4. GENERAL DRIVING CYCLE

Always perform the diagnosis continuously.

5. DIAGNOSTIC METHOD

Judge as OK and clear the NG when the malfunction criteria below are met.

Judgment Value

Malfunction Criteria	Threshold Value
(1) Monitoring IC operation	The result and estimated value match.
(2) | Throttle position sensor 1 opening angle – (Throttle position sensor 1 opening angle after passing amplifier)/4 |	< 3 °
(3) Main CPU calculation result	The result and estimated value match.
(4) | Standard voltage – Voltage reading |	< 0.078125 V
(5) EEPROM writing	Writing completed
(6) Communication with output IC	Possible to communicate

Time Needed for Diagnosis:
(1): 200 ms
(2): 24 ms
(3): 192 ms
(4): 200 ms
(5): 48 ms
(6): 2500 ms
Malfunction Indicator Light Illumination: Illuminates as soon as a malfunction occurs.

CC:DTC P0638 THROTTLE ACTUATOR CONTROL RANGE/PERFORMANCE (BANK 1)

1. OUTLINE OF DIAGNOSIS

Judge as NG when the target opening angle and actual opening angle is mismatched or the current to motor is the specified duty or more for specified time continuously.

2. COMPONENT DESCRIPTION

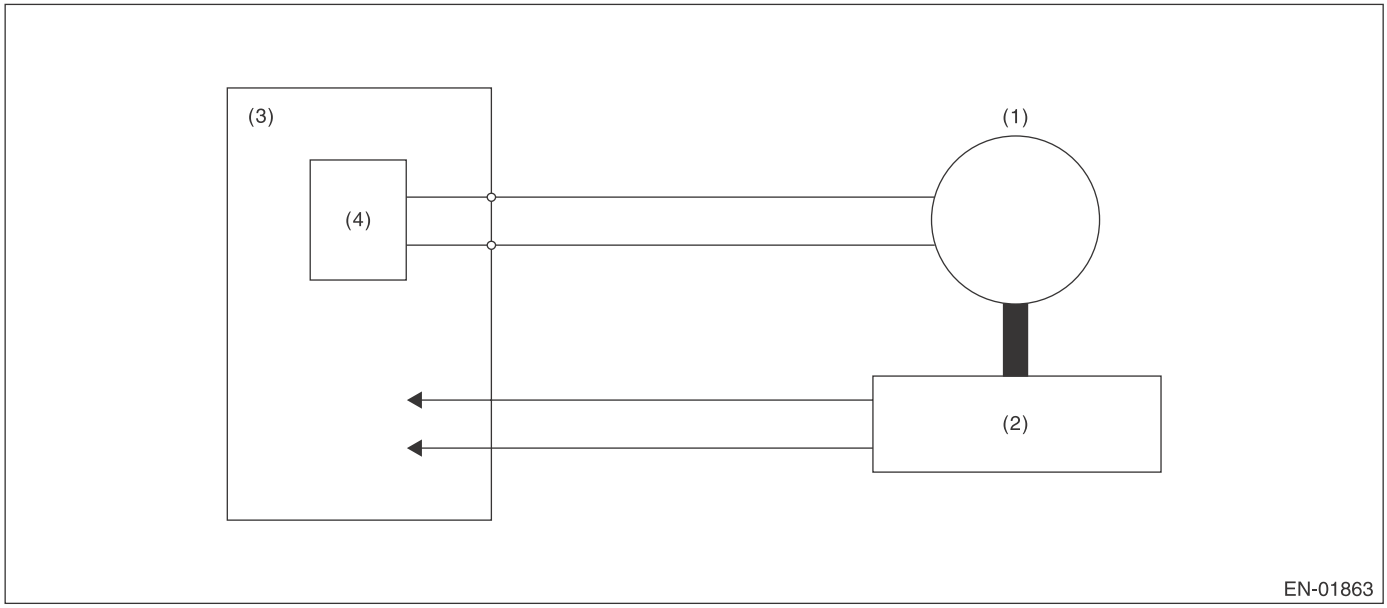

(1) Motor
(2) Throttle position sensor
(3) Engine control module (ECM)
(4) Drive circuit

3. ENABLE CONDITION

Secondary Parameters	Enable Conditions
Ignition switch	ON
Normal operation of electronic throttle control	ON

4. GENERAL DRIVING CYCLE

Always perform the diagnosis continuously when the electronic throttle control is operating.

5. DIAGNOSTIC METHOD

Judge as OK and clear the NG when the malfunction criteria below are met.

Judgment Value

Malfunction Criteria	Threshold Value
Difference between target opening angle and actual opening angle	Within the OK range of **judgment value detail**
Output duty to drive circuit	< 95 %

Time Needed for Diagnosis:

- Difference between target opening angle and actual opening angle:
  - NG judgment: Refer to the **judgment time detail.**
  - OK judgment: 2000 ms
- Output duty to drive circuit: 2000 ms

Diagnostic Trouble Code (DTC) Detecting Criteria

Details of Judgment Value

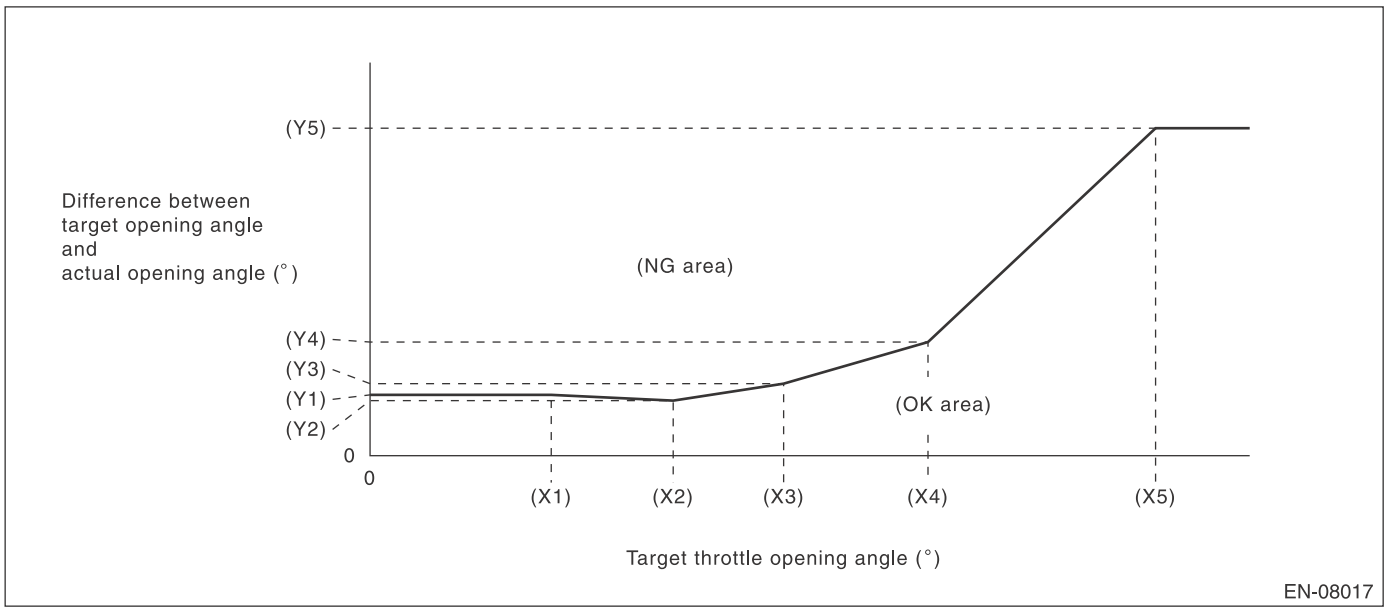

(X1) 6.915 °
(X2) 11.565 °
(X3) 15.785 °
(X4) 21.285 °
(X5) 29.965 °

(Y1) 4.65 °
(Y2) 4.22 °
(Y3) 5.5 °
(Y4) 8.68 °
(Y5) 25 °

Judgment time detail

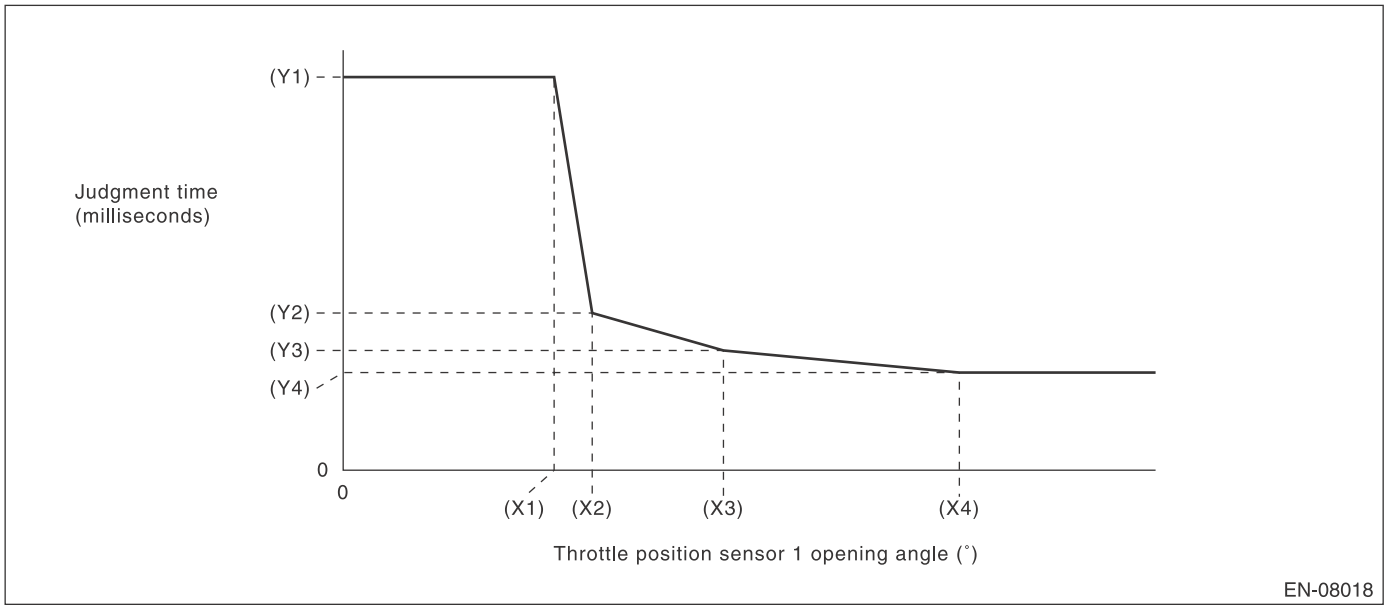

(X1) 8.049999237 °
(X2) 9.5 °
(X3) 14.5 °
(X4) 23.5 °

(Y1) 1000 ms
(Y2) 400 ms
(Y3) 304 ms
(Y4) 248 ms

NOTE:
Judgment time is constantly 1000 ms with Actual opening angle ≤ Target opening angle.
Malfunction Indicator Light Illumination: Illuminates as soon as a malfunction occurs.

CD:DTC P0700 TRANSMISSION CONTROL SYSTEM (MIL REQUEST)

1. OUTLINE OF DIAGNOSIS

Judge as NG when there is CAN communication with the TCM and there is a MIL lighting request.

2. ENABLE CONDITION

Secondary Parameters	Enable Conditions
None	

3. GENERAL DRIVING CYCLE

Always perform the diagnosis continuously.

4. DIAGNOSTIC METHOD

- **Abnormality Judgment**

If the duration of time while the following conditions are met is longer than the time indicated, judge as NG.

Judgment Value

Malfunction Criteria	Threshold Value
Battery voltage	≥ 10.9 V
MIL lighting request from TCM	Yes

Time Needed for Diagnosis: 2500 ms
Malfunction Indicator Light Illumination: Illuminates as soon as a malfunction occurs.

- **Normality Judgment**

If the duration of time while the following conditions are met is longer than the time indicated, judge as NG.

Judgment Value

Malfunction Criteria	Threshold Value
Battery voltage	≥ 10.9 V
MIL lighting request from TCM	None

Time Needed for Diagnosis: Less than 1 second

CE:DTC P0851 PARK/NEUTRAL SWITCH INPUT CIRCUIT LOW (AT MODEL)

1. OUTLINE OF DIAGNOSIS

Judge the open or short circuit of the neutral SW.
Judge as NG when the ECM neutral terminal input differs from the reception data from TCM.

2. ENABLE CONDITION

Secondary Parameters	Enable Conditions
Battery voltage	≥ 10.9 V
Starter relay	OFF

3. GENERAL DRIVING CYCLE

Perform the diagnosis continuously in 2 seconds after starting the engine.

4. DIAGNOSTIC METHOD

- **Abnormality Judgment**

If the duration of time while the following conditions are met is longer than the time indicated, judge as NG.

Judgment Value

Malfunction Criteria	Threshold Value
Neutral switch signal in ECM when “P”/“N” range in TCM are “OFF” and when the other switches are “ON”	LOW (ON)

Time Needed for Diagnosis: 100 time(s)
Malfunction Indicator Light Illumination: Illuminates when malfunction occurs in 2 continuous driving cycles.

- **Normality Judgment**

Judge as OK and clear the NG if the continuous time while the following conditions are established is more than the predetermined time.

Judgment Value

Malfunction Criteria	Threshold Value
Neutral switch signal in ECM when “P”/“N” range in TCM are “OFF” and when the other switches are “ON”	HIGH (OFF)

Time Needed for Diagnosis: Less than 1 second

CF:DTC P0851 NEUTRAL SWITCH INPUT CIRCUIT LOW (MT MODEL)

1. OUTLINE OF DIAGNOSIS

Detect the open or short circuit of neutral SW.
Judge as NG when there is no change in the neutral SW even if the driving shift was applied. (There is neutral SW ON/OFF inversion from the vehicle speed and engine speed.)

2. ENABLE CONDITION

Secondary Parameters	Enable Conditions
Battery voltage	≥ 10.9 V
Starter relay	OFF

3. GENERAL DRIVING CYCLE

Perform the diagnosis continuously in 2 seconds after starting the engine.

4. DIAGNOSTIC METHOD

- **Abnormality Judgment**

Judge NG when the malfunction criteria below are completed determined times or more after the neutral SW change.

Judgment Value

Malfunction Criteria	Threshold Value
Neutral switch signal (while changing from a to b below)	LOW (ON) continues.
Driving condition change	From a) to b)
a) Engine speed 600 rpm — 900 rpm & Vehicle speed = 0 km/h (0 MPH)	
b) Engine speed 1600 rpm — 2550 rpm & Vehicle speed ≥ 64 km/h (39.8 MPH)	

Time Needed for Diagnosis: 3 time(s)
Malfunction Indicator Light Illumination: Illuminates when malfunction occurs in 2 continuous driving cycles.

- **Normality Judgment**

Judge as OK and clear NG when there is change in the neutral SW.

Judgment Value

Malfunction Criteria	Threshold Value
Neutral switch signal (while changing from a to b below)	Changes to HIGH (OFF).
Driving condition change	From a) to b)
a) Engine speed 600 rpm — 900 rpm & Vehicle speed = 0 km/h (0 MPH)	
b) Engine speed 1600 rpm — 2550 rpm & Vehicle speed ≥ 64 km/h (39.8 MPH)	

Time Needed for Diagnosis: Less than 1 second

CG:DTC P0852 PARK/NEUTRAL SWITCH INPUT CIRCUIT HIGH (AT MODEL)

1. OUTLINE OF DIAGNOSIS

Judge the open or short circuit of the neutral SW.
Judge as NG when the ECM neutral terminal input differs from the reception data from TCM.

2. ENABLE CONDITION

Secondary Parameters	Enable Conditions
Battery voltage	≥ 10.9 V
Starter relay	OFF

3. GENERAL DRIVING CYCLE

Perform the diagnosis continuously in 2 seconds after starting the engine.

4. DIAGNOSTIC METHOD

- **Abnormality Judgment**

If the duration of time while the following conditions are met is longer than the time indicated, judge as NG.

Judgment Value

Malfunction Criteria	Threshold Value
Neutral switch signal in ECM when “P”/“N” range in TCM are “ON” and when the other switches are “OFF”	HIGH (OFF)

Time Needed for Diagnosis: 100 time(s)
Malfunction Indicator Light Illumination: Illuminates when malfunction occurs in 2 continuous driving cycles.

- **Normality Judgment**

Judge as OK and clear the NG if the continuous time while the following conditions are established is more than the predetermined time.

Judgment Value

Malfunction Criteria	Threshold Value
Neutral switch signal in ECM when “P”/“N” range in TCM are “ON” and when the other switches are “OFF”	LOW (ON)

Time Needed for Diagnosis: Less than 1 second

CH:DTC P0852 NEUTRAL SWITCH INPUT CIRCUIT HIGH (MT MODEL)

1. OUTLINE OF DIAGNOSIS

Detect the open or short circuit of neutral SW.
Judge as NG when there is no change in the neutral SW even if the driving shift was applied. (There is neutral SW ON/OFF inversion from the vehicle speed and engine speed.)

2. ENABLE CONDITION

Secondary Parameters	Enable Conditions
Battery voltage	≥ 10.9 V
Starter relay	OFF

3. GENERAL DRIVING CYCLE

Perform the diagnosis continuously in 2 seconds after starting the engine.

4. DIAGNOSTIC METHOD

- **Abnormality Judgment**

Judge NG when the malfunction criteria below are completed determined times or more after the neutral SW change.

Judgment Value

Malfunction Criteria	Threshold Value
Neutral switch signal (while changing from a to b below)	HIGH (OFF) continues.
Driving condition change	From a) to b)
a) Engine speed 600 rpm — 900 rpm & Vehicle speed = 0 km/h (0 MPH)	
b) Engine speed 1600 rpm — 2550 rpm & Vehicle speed ≥ 64 km/h (39.8 MPH)	

Time Needed for Diagnosis: 3 time(s)
Malfunction Indicator Light Illumination: Illuminates when malfunction occurs in 2 continuous driving cycles.

- **Normality Judgment**

Judge as OK and clear NG when there is change in the neutral SW.

Judgment Value

Malfunction Criteria	Threshold Value
Neutral switch signal (while changing from a to b below)	Changes to LOW (ON).
Driving condition change	From a) to b)
a) Engine speed 600 rpm — 900 rpm & Vehicle speed = 0 km/h (0 MPH)	
b) Engine speed 1600 rpm — 2550 rpm & Vehicle speed ≥ 64 km/h (39.8 MPH)	

Time Needed for Diagnosis: Less than 1 second

CI: DTC P1152 O2 SENSOR CIRCUIT RANGE/PERFORMANCE (LOW) (BANK1 SENSOR1)

1. OUTLINE OF DIAGNOSIS

Detect that λ value remains low.
Judge as NG when lambda value is abnormal in accordance with λ value of front oxygen (A/F) sensor and running conditions such as vehicle speed, amount of intake air, engine coolant temperature, sub feedback control, etc.

λ value = Actual air fuel ratio/Theoretical air fuel ratio
λ > 1: Lean
λ < 1: Rich

2. COMPONENT DESCRIPTION

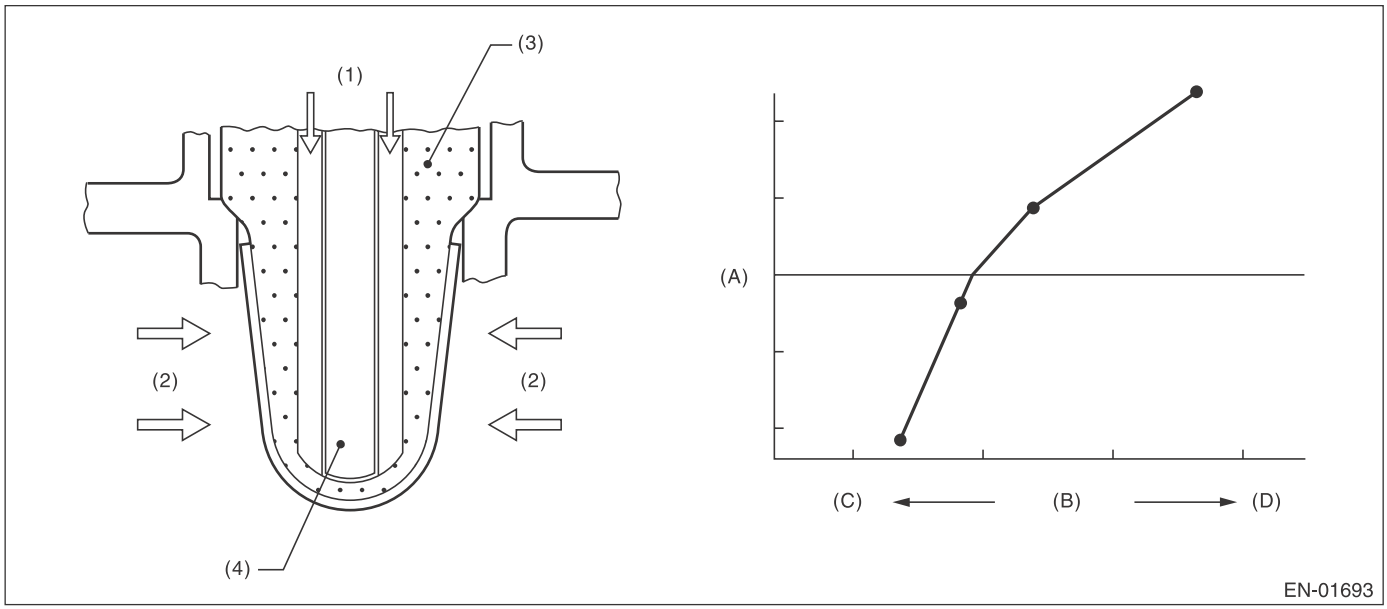

(A) Electromotive force
(B) Air fuel ratio
(C) Lean
(D) Rich

(1) Atmosphere
(2) Exhaust gas
(3) ZrO_2
(4) Ceramic heater

3. ENABLE CONDITION

Secondary Parameters	Enable Conditions
Time needed for all secondary parameters to be in enable conditions	≥ 4096 ms
Battery voltage	≥ 10.9 V
Barometric pressure	≥ 75 kPa (563 mmHg, 22.2 inHg)
Rear oxygen sensor sub feedback	Execution
Rear oxygen sensor output voltage – Feedback target voltage	–0.2 V — 0.1 V
or rear oxygen sensor sub feedback compensation coefficient	On Min.
or rear oxygen sensor sub feedback compensation coefficient	On Max.
Elapsed time after starting the engine	≥ 60000 ms
Engine coolant temperature	≥ 75 °C (167 °F)
Vehicle speed	≥ 20 km/h (12.4 MPH)
Amount of intake air	≥ 6 g/s (0.21 oz/s)
Load change at 180°CA	< 0.02 g/rev (0 oz/rev)
Front oxygen (A/F) sensor impedance	0 Ω — 50 Ω
Learning value of evaporation gas density	< 0.2
Total time of operating canister purge	≥ 19.9 s
Targeted lambda value load compensation coefficient	–0.03 — 0.000

4. GENERAL DRIVING CYCLE

Perform diagnosis continuously at a constant speed of 20 km/h (12.4 MPH) or more after 60000 ms have passed since the engine started.

5. DIAGNOSTIC METHOD

- **Abnormality Judgment**

If the duration of time while the following conditions are met is longer than the time indicated, judge as NG.

Judgment Value

Malfunction Criteria	Threshold Value
λ value	< 0.85

Time Needed for Diagnosis: 10000 ms
Malfunction Indicator Light Illumination: Illuminates when malfunction occurs in 2 continuous driving cycles.

- **Normality Judgment**

Judge as OK and clear the NG if the continuous time while the following conditions are established is more than the predetermined time.

Judgment Value

Malfunction Criteria	Threshold Value
λ value	≥ 0.85

Time Needed for Diagnosis: Less than 1 second

CJ:DTC P1153 O2 SENSOR CIRCUIT RANGE/PERFORMANCE (HIGH) (BANK1 SENSOR1)

1. OUTLINE OF DIAGNOSIS

Detect that λ value remains high.
Judge as NG when lambda value is abnormal in accordance with λ value of front oxygen (A/F) sensor and running conditions such as vehicle speed, amount of intake air, engine coolant temperature, sub feedback control, etc.

λ value = Actual air fuel ratio/Theoretical air fuel ratio
λ > 1: Lean
λ < 1: Rich

2. COMPONENT DESCRIPTION

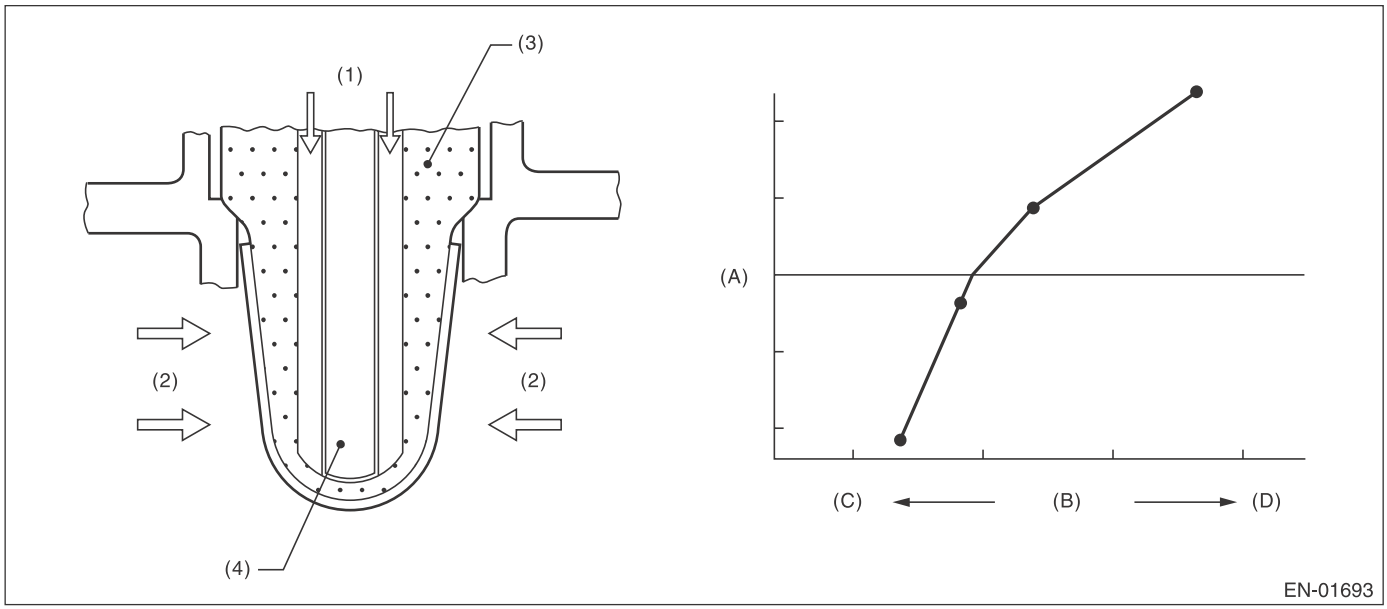

(A) Electromotive force
(B) Air fuel ratio
(C) Lean
(D) Rich

(1) Atmosphere
(2) Exhaust gas
(3) ZrO_2
(4) Ceramic heater

3. ENABLE CONDITION

Secondary Parameters	Enable Conditions
Time needed for all secondary parameters to be in enable conditions	≥ 4096 ms
Battery voltage	≥ 10.9 V
Barometric pressure	≥ 75 kPa (563 mmHg, 22.2 inHg)
Rear oxygen sensor sub feedback	Execution
Rear oxygen sensor output voltage – Feedback target voltage	–0.2 V — 0.1 V
or rear oxygen sensor sub feedback compensation coefficient	On Min.
or rear oxygen sensor sub feedback compensation coefficient	On Max.
Elapsed time after starting the engine	≥ 60000 ms
Engine coolant temperature	≥ 75 °C (167 °F)
Vehicle speed	≥ 20 km/h (12.4 MPH)
Amount of intake air	≥ 6 g/s (0.21 oz/s)
Load change at 180°CA	< 0.02 g/rev (0 oz/rev)
Front oxygen (A/F) sensor impedance	0 Ω — 50 Ω
Learning value of evaporation gas density	< 0.2
Total time of operating canister purge	≥ 19.9 s
Targeted lambda value load compensation coefficient	–0.03 — 0.000

4. GENERAL DRIVING CYCLE

Perform diagnosis continuously at a constant speed of 20 km/h (12.4 MPH) or more after 60000 ms have passed since the engine started.

5. DIAGNOSTIC METHOD

- **Abnormality Judgment**

If the duration of time while the following conditions are met is longer than the time indicated, judge as NG.

Judgment Value

Malfunction Criteria	Threshold Value
λ value	> 1.15

Time Needed for Diagnosis: 10000 ms
Malfunction Indicator Light Illumination: Illuminates when malfunction occurs in 2 continuous driving cycles.

- **Normality Judgment**

Judge as OK and clear the NG if the continuous time while the following conditions are established is more than the predetermined time.

Judgment Value

Malfunction Criteria	Threshold Value
λ value	≤ 1.15

Time Needed for Diagnosis: Less than 1 second

CK:DTC P1160 RETURN SPRING FAILURE

1. OUTLINE OF DIAGNOSIS

Judge as NG when the valve is opened more than the default opening angle, but does not move to the close direction with the motor power stopped.

2. COMPONENT DESCRIPTION

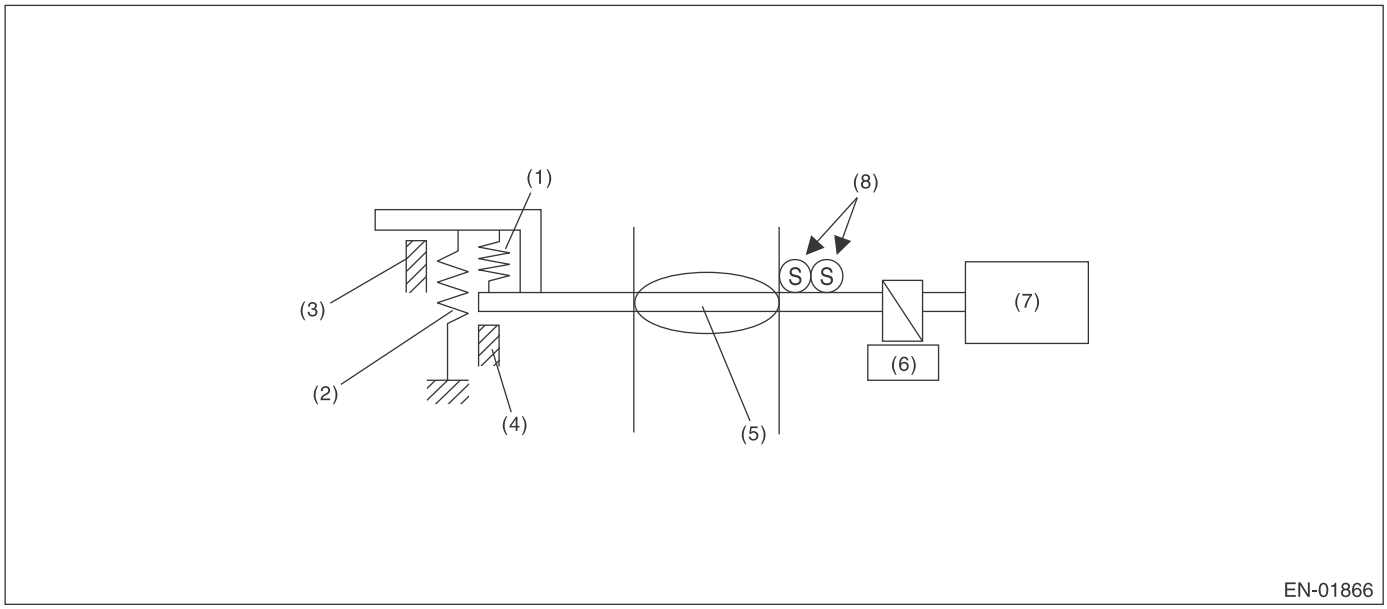

(1) Opener spring
(2) Return spring
(3) Intermediate stopper
(4) Full closed stopper
(5) Throttle valve
(6) Gear
(7) DC motor
(8) Main and sub throttle sensor

3. ENABLE CONDITION

Secondary Parameters	Enable Conditions
Motor continuity	OFF

4. GENERAL DRIVING CYCLE

- Ignition switch ON → OFF
- Ignition switch OFF → ON (Only after clearing memory)

5. DIAGNOSTIC METHOD

Judge as OK and clear the NG when the malfunction criteria below are met.

Judgment Value

Malfunction Criteria	Threshold Value
Opening variation after continuity is set to OFF	≥ 2°

Time Needed for Diagnosis: 1880 ms
Malfunction Indicator Light Illumination: Illuminates as soon as a malfunction occurs.

CL:DTC P1443 VENT CONTROL SOLENOID VALVE FUNCTION PROBLEM

1. OUTLINE OF DIAGNOSIS

Detect the abnormal function (stuck closed) of the drain valve.
Judge as NG when fuel tank pressure is low.

2. COMPONENT DESCRIPTION

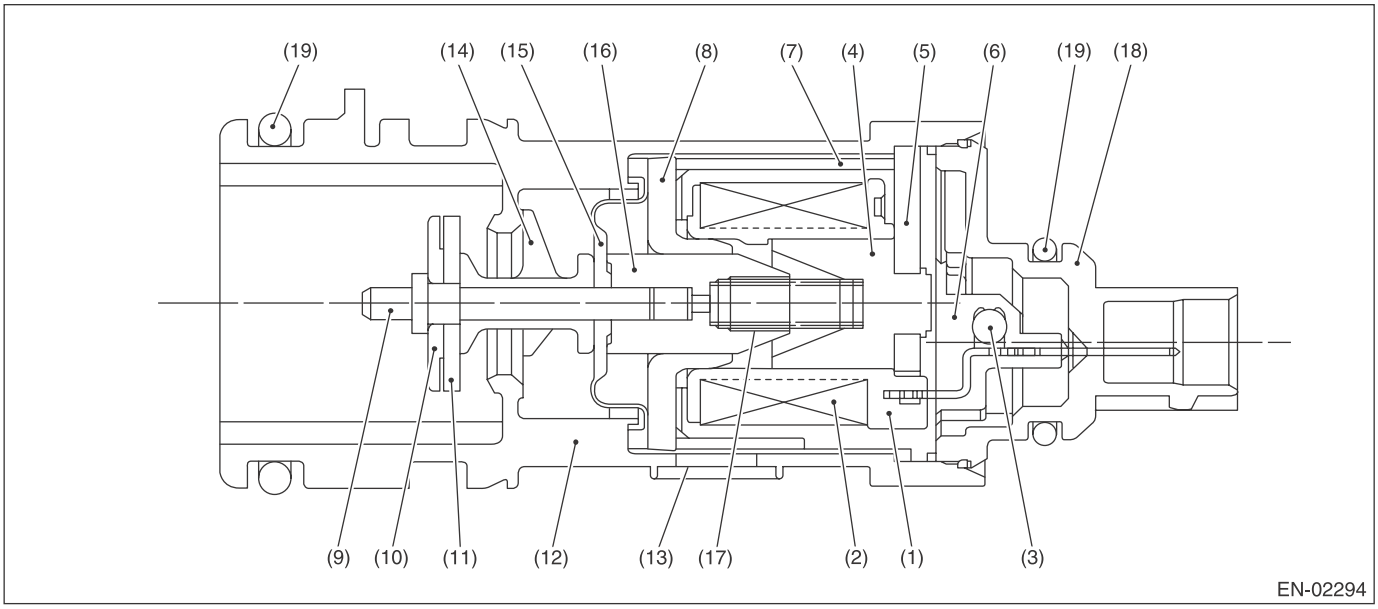

(1) Bobbin
(2) Coil
(3) Diode
(4) Stator core
(5) End plate
(6) Body
(7) Yoke
(8) Magnetic plate
(9) Shaft
(10) Plate
(11) Valve
(12) Housing
(13) Filter
(14) Retainer
(15) Diaphragm
(16) Movable core
(17) Spring
(18) Cover
(19) O-ring

3. ENABLE CONDITION

Secondary Parameters	Enable Conditions
Drain valve	Open
Battery voltage	≥ 10.9 V
Barometric pressure	≥ 75 kPa (563 mmHg, 22.2 inHg)
Tank pressure when starter is OFF → ON	–0.4 kPa (–3.2 mmHg, –0.1 inHg) and 1.4 kPa (10.7 mmHg, 0.4 inHg)

4. GENERAL DRIVING CYCLE

Always perform the diagnosis continuously.

5. DIAGNOSTIC METHOD

• Abnormality Judgment

If the duration of time while the following conditions are met is longer than the time indicated, judge as NG.

Judgment Value

Malfunction Criteria	Threshold Value
Fuel tank pressure	≤ –4 kPa (–30 mmHg, –1.2 inHg)

Time Needed for Diagnosis: 3000 s
Malfunction Indicator Light Illumination: Illuminates as soon as a malfunction occurs.

• Normality Judgment

Judge as OK and clear the NG if the continuous time while the following conditions are established is more than the predetermined time.

Judgment Value

Malfunction Criteria	Threshold Value
Fuel tank pressure	> –4 kPa (–30 mmHg, –1.2 inHg)
Cumulative time when all the malfunction criteria below are met.	≥ 30000 s
Purge control solenoid valve duty	Not = 0
Fuel temperature	–10 °C (14 °F) — 70 °C (158 °F)
Intake manifold relative pressure	≥ –26.7 kPa (–200 mmHg, –7.9 inHg)

Time Needed for Diagnosis: Less than 1 second

CM:DTC P1492 EGR SOLENOID VALVE SIGNAL #1 CIRCUIT MALFUNCTION (LOW INPUT)

1. OUTLINE OF DIAGNOSIS

- Detects open or short circuit of EGR.
- Judge as NG when the ECM output level differs from the actual terminal level.

2. COMPONENT DESCRIPTION

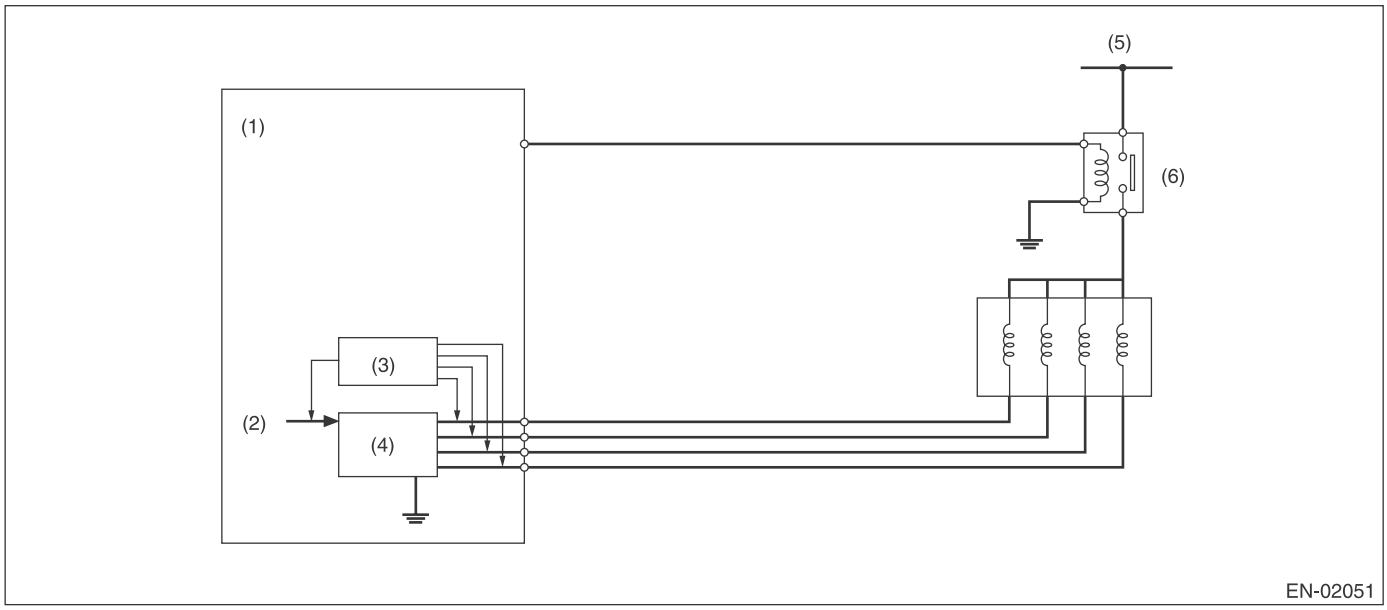

(1) Engine control module (ECM)
(2) Computer unit (CPU)
(3) Detecting circuit
(4) Switch circuit
(5) Battery voltage
(6) Main relay

3. ENABLE CONDITION

Secondary Parameters	Enable Conditions
Elapsed time after starting the engine	≥ 1 second
EGR valve target position	> 0 step
Battery voltage	≥ 10.9 V

4. GENERAL DRIVING CYCLE

Perform diagnosis continuously during EGR operation.

5. DIAGNOSTIC METHOD

• Abnormality Judgment

If the duration of time while the following conditions are met is longer than the time indicated, judge as NG.

Judgment Value

Malfunction Criteria	Threshold Value
Terminal voltage level when ECM outputs OFF signal or Terminal voltage level when EGR operates	Low level Low level

Time Needed for Diagnosis: 2500 ms
Malfunction Indicator Light: Illuminates as soon as a malfunction occurs.

• Normality Judgment

Judge as OK and clear the NG if the continuous time while the following conditions are established is more than the predetermined time.

Judgment Value

Malfunction Criteria	Threshold Value
Terminal voltage level when ECM outputs OFF signal	High level
Terminal voltage level when EGR operates	High level

Time Needed for Diagnosis: 256 ms

CN:DTC P1493 EGR SOLENOID VALVE SIGNAL #1 CIRCUIT MALFUNCTION (HIGH INPUT)

1. OUTLINE OF DIAGNOSIS

- Detects open or short circuit of EGR.
- Judge as NG when the ECM output level differs from the actual terminal level.

2. COMPONENT DESCRIPTION

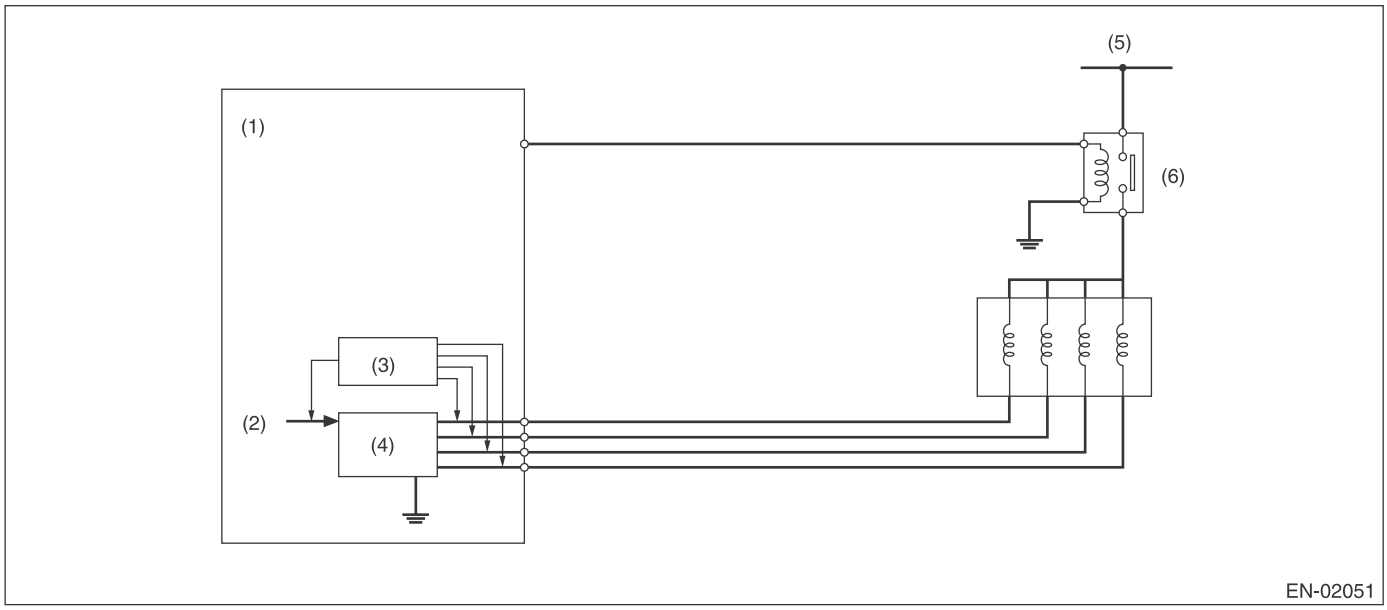

(1) Engine control module (ECM)
(2) Computer unit (CPU)
(3) Detecting circuit
(4) Switch circuit
(5) Battery voltage
(6) Main relay

3. ENABLE CONDITION

Secondary Parameters	Enable Conditions
Elapsed time after starting the engine	≥ 1 second
EGR valve target position	> 0 step
Battery voltage	≥ 10.9 V

4. GENERAL DRIVING CYCLE

Always perform the diagnosis continuously.

5. DIAGNOSTIC METHOD

• Abnormality Judgment

If the duration of time while the following conditions are met is longer than the time indicated, judge as NG.

Judgment Value

Malfunction Criteria	Threshold Value
Terminal voltage level when ECM outputs ON signal or Terminal voltage level when EGR operates	High level High level

Time Needed for Diagnosis: 2500 ms
Malfunction Indicator Light Illumination: Illuminates as soon as a malfunction occurs.

• Normality Judgment

Judge as OK and clear the NG if the continuous time while the following conditions are established is more than the predetermined time.

Judgment Value

Malfunction Criteria	Threshold Value
Terminal voltage level when ECM outputs ON signal Terminal voltage level when EGR operates	Low level Low level

Time Needed for Diagnosis: 256 ms

CO:DTC P1494 EGR SOLENOID VALVE SIGNAL #2 CIRCUIT MALFUNCTION (LOW INPUT)

1. OUTLINE OF DIAGNOSIS

NOTE:
For the detection standard, refer to DTC P1492. <Ref. to GD(H4SO)-164, DTC P1492 EGR SOLENOID VALVE SIGNAL #1 CIRCUIT MALFUNCTION (LOW INPUT), Diagnostic Trouble Code (DTC) Detecting Criteria.>

CP:DTC P1495 EGR SOLENOID VALVE SIGNAL #2 CIRCUIT MALFUNCTION (HIGH INPUT)

1. OUTLINE OF DIAGNOSIS

NOTE:
For the detection standard, refer to DTC P1493. <Ref. to GD(H4SO)-166, DTC P1493 EGR SOLENOID VALVE SIGNAL #1 CIRCUIT MALFUNCTION (HIGH INPUT), Diagnostic Trouble Code (DTC) Detecting Criteria.>

CQ:DTC P1496 EGR SOLENOID VALVE SIGNAL #3 CIRCUIT MALFUNCTION (LOW INPUT)

1. OUTLINE OF DIAGNOSIS

NOTE:
For the detection standard, refer to DTC P1492. <Ref. to GD(H4SO)-164, DTC P1492 EGR SOLENOID VALVE SIGNAL #1 CIRCUIT MALFUNCTION (LOW INPUT), Diagnostic Trouble Code (DTC) Detecting Criteria.>

CR:DTC P1497 EGR SOLENOID VALVE SIGNAL #3 CIRCUIT MALFUNCTION (HIGH INPUT)

1. OUTLINE OF DIAGNOSIS

NOTE:
For the detection standard, refer to DTC P1493. <Ref. to GD(H4SO)-166, DTC P1493 EGR SOLENOID VALVE SIGNAL #1 CIRCUIT MALFUNCTION (HIGH INPUT), Diagnostic Trouble Code (DTC) Detecting Criteria.>

CS:DTC P1498 EGR SOLENOID VALVE SIGNAL #4 CIRCUIT MALFUNCTION (LOW INPUT)

1. OUTLINE OF DIAGNOSIS

NOTE:
For the detection standard, refer to DTC P1492. <Ref. to GD(H4SO)-164, DTC P1492 EGR SOLENOID VALVE SIGNAL #1 CIRCUIT MALFUNCTION (LOW INPUT), Diagnostic Trouble Code (DTC) Detecting Criteria.>

CT:DTC P1499 EGR SOLENOID VALVE SIGNAL #4 CIRCUIT MALFUNCTION (HIGH INPUT)

1. OUTLINE OF DIAGNOSIS

NOTE:
For the detection standard, refer to DTC P1493. <Ref. to GD(H4SO)-166, DTC P1493 EGR SOLENOID VALVE SIGNAL #1 CIRCUIT MALFUNCTION (HIGH INPUT), Diagnostic Trouble Code (DTC) Detecting Criteria.>

CU:DTC P1518 STARTER SWITCH CIRCUIT LOW INPUT

1. OUTLINE OF DIAGNOSIS

Detect the open or short circuit of starter SW.
Judge as OFF NG when it becomes after engine start despite no starter ON experience.

2. ENABLE CONDITIONS

Secondary Parameters	Enable Conditions
None	

3. GENERAL DRIVING CYCLE

Always perform the diagnosis continuously.

4. DIAGNOSTIC METHOD

- **Abnormality Judgment**

Judge as OFF NG when the following conditions are established.

Judgment Value

Malfunction Criteria	Threshold Value
Vehicle speed	< 1 km/h (0.6 MPH)
Starter ON signal	Not detected
Engine condition	Changed from before start to after start
Battery voltage	≥ 8 V

Time Needed for Diagnosis: Less than 1 second
Malfunction Indicator Light Illumination: Illuminates when malfunction occurs in 2 continuous driving cycles.

- **Normality Judgment**

Judge as OFF OK and clear the NG if the following conditions are established.

Judgment Value

Malfunction Criteria	Threshold Value
Starter ON	Experienced
Starter ON diagnosis	No diagnosis experience
Battery voltage	≥ 8 V

Time Needed for Diagnosis: Less than 1 second

CV:DTC P1560 BACK-UP VOLTAGE CIRCUIT MALFUNCTION

1. OUTLINE OF DIAGNOSIS

Detect the open/short circuit of back-up power supply circuit.
Judge as NG when the backup power voltage is low.

2. ENABLE CONDITION

Secondary Parameters	Enable Conditions
None	

3. GENERAL DRIVING CYCLE

Always perform the diagnosis continuously.

4. DIAGNOSTIC METHOD

- **Abnormality Judgment**

If the duration of time while the following conditions are met is longer than the time indicated, judge as NG.

Judgment Value

Malfunction Criteria	Threshold Value
Voltage of back-up power supply	Low
Battery voltage	≥ 10.9 V
Engine condition	After engine starting

Time Needed for Diagnosis: 2500 ms
Malfunction Indicator Light Illumination: Illuminates as soon as a malfunction occurs.

- **Normality Judgment**

Judge as OK and clear the NG if the continuous time while the following conditions are established is more than the predetermined time.

Judgment Value

Malfunction Criteria	Threshold Value
Voltage of back-up power supply	High
Battery voltage	≥ 10.9 V
Engine condition	After engine starting

Time Needed for Diagnosis: Less than 1 second

CW:DTC P1570 ANTENNA

1. OUTLINE OF DIAGNOSIS

NOTE:
For the detection standard, refer to DTC P0513. <Ref. to GD(H4SO)-145, DTC P0513 INCORRECT IMMOBILIZER KEY, Diagnostic Trouble Code (DTC) Detecting Criteria.>

CX:DTC P1571 REFERENCE CODE INCOMPATIBILITY

1. OUTLINE OF DIAGNOSIS

NOTE:
For the detection standard, refer to DTC P0513. <Ref. to GD(H4SO)-145, DTC P0513 INCORRECT IMMOBILIZER KEY, Diagnostic Trouble Code (DTC) Detecting Criteria.>

CY:DTC P1572 IMM CIRCUIT FAILURE (EXCEPT ANTENNA CIRCUIT)

1. OUTLINE OF DIAGNOSIS

NOTE:
For the detection standard, refer to DTC P0513. <Ref. to GD(H4SO)-145, DTC P0513 INCORRECT IMMOBILIZER KEY, Diagnostic Trouble Code (DTC) Detecting Criteria.>

CZ:DTC P1574 KEY COMMUNICATION FAILURE

1. OUTLINE OF DIAGNOSIS

NOTE:
For the detection standard, refer to DTC P0513. <Ref. to GD(H4SO)-145, DTC P0513 INCORRECT IMMOBILIZER KEY, Diagnostic Trouble Code (DTC) Detecting Criteria.>

DA:DTC P1576 EGI CONTROL MODULE EEPROM

1. OUTLINE OF DIAGNOSIS

NOTE:
For the detection standard, refer to DTC P0513. <Ref. to GD(H4SO)-145, DTC P0513 INCORRECT IMMOBILIZER KEY, Diagnostic Trouble Code (DTC) Detecting Criteria.>

DB:DTC P1577 IMM CONTROL MODULE EEPROM

1. OUTLINE OF DIAGNOSIS

NOTE:
For the detection standard, refer to DTC P0513. <Ref. to GD(H4SO)-145, DTC P0513 INCORRECT IMMOBILIZER KEY, Diagnostic Trouble Code (DTC) Detecting Criteria.>

DC:DTC P1578 METER FAILURE

1. OUTLINE OF DIAGNOSIS

NOTE:
For the detection standard, refer to DTC P0513. <Ref. to GD(H4SO)-145, DTC P0513 INCORRECT IMMOBILIZER KEY, Diagnostic Trouble Code (DTC) Detecting Criteria.>

DD:DTC P1602 CONTROL MODULE PROGRAMMING ERROR

1. OUTLINE OF DIAGNOSIS

Detect malfunctions of the catalyst advanced idling retard angle control.
Judge as NG when ECM is not controlling the angle properly during catalyst advanced idling retard angle control.
Judge as NG if there is exhaust gas temperature diagnosis, idle speed diagnosis and final ignition timing diagnosis, and if any one of them is NG.

- Exhaust temperature diagnosis

Judge as NG when the estimated exhausted gas temperature in 14 seconds after the cold start is below the specified value.

- Idle speed diagnosis

Judge as NG when actual engine speed is not close to target engine speed after terminating the retard angle control.

- Final ignition timing diagnosis

Judge as NG when actual retard amount is under the specified value at cold start.

2. ENABLE CONDITION

Secondary Parameters	Enable Conditions
Atmospheric pressure	≥ 75 kPa (563 mmHg, 22.2 inHg)
Battery voltage	≥ 10.9 V
Cold start diagnosis	Incomplete
Vehicle speed	< 2 km/h (1.2 MPH)
Misfire in 200 engine revs.	< 5
Elapsed time after starting the engine	= 14 s

3. GENERAL DRIVING CYCLE

Perform the diagnosis at cold start.

4. DIAGNOSTIC METHOD

• Exhaust temperature diagnosis

Abnormality Judgment
When the diagnostic execution conditions are established, calculate the estimated exhaust temperature. Judge as NG when the following conditions are established after engine starting within the predetermined time.

Judgment Value

Malfunction Criteria	Threshold Value
Estimated exhaust gas temperature	< Value from Map

Map (PZEV model)

Coolant temperature after starting the engine	–40 °C (–40 °F)	–30 °C (–22 °F)	–20 °C (–4 °F)	–10 °C (14 °F)	0 °C (32 °F)	10 °C (50 °F)	20 °C (68 °F)	30 °C (86 °F)	40 °C (104 °F)	50 °C (122 °F)
Threshold value (AT model)	140 °C (284 °F)	140 °C (284 °F)	140 °C (284 °F)	140 °C (284 °F)	140 °C (284 °F)	138 °C (280.4 °F)	138 °C (280.4 °F)	138 °C (280.4 °F)	138 °C (280.4 °F)	138 °C (280.4 °F)
Threshold value (MT model)	168 °C (334.4 °F)	168 °C (334.4 °F)	168 °C (334.4 °F)	168 °C (334.4 °F)	168 °C (334.4 °F)	168 °C (334.4 °F)	168 °C (334.4 °F)	160 °C (320 °F)	145 °C (293 °F)	145 °C (293 °F)

Map (except for PZEV model)

Coolant temperature after starting the engine	–40 °C (–40 °F)	–30 °C (–22 °F)	–20 °C (–4 °F)	–10 °C (14 °F)	0 °C (32 °F)	10 °C (50 °F)	20 °C (68 °F)	30 °C (86 °F)	40 °C (104 °F)	50 °C (122 °F)
Threshold value (AT model)	140 °C (284 °F)	140 °C (284 °F)	140 °C (284 °F)	140 °C (284 °F)	140 °C (284 °F)	140 °C (284 °F)	135 °C (275 °F)	130 °C (266 °F)	125 °C (257 °F)	125 °C (257 °F)
Threshold value (MT model)	168 °C (334.4 °F)	168 °C (334.4 °F)	168 °C (334.4 °F)	168 °C (334.4 °F)	168 °C (334.4 °F)	168 °C (334.4 °F)	168 °C (334.4 °F)	160 °C (320 °F)	145 °C (293 °F)	145 °C (293 °F)

Time Needed for Diagnosis: 14 seconds
Malfunction Indicator Light Illumination: Illuminates when malfunction occurs in 2 continuous driving cycles.

Normality Judgment
Judge as OK and clear the NG if the following conditions are established.

Judgment Value

Malfunction Criteria	Threshold Value
Estimated exhaust gas temperature	≥ Value from Map

Time Needed for Diagnosis: Less than 1 second

• Idle speed diagnosis

Abnormality Judgment
Judge as NG when the following conditions are established after the predetermined time.

Judgment Value

Malfunction Criteria	Threshold Value
Continuous time of (Target engine speed – Actual engine speed > –300 rpm)	≥ 6000 ms
Continuous time of (actual retard amount > 30 °CA)	≥ 0 ms

Time Needed for Diagnosis: 14 seconds
Malfunction Indicator Light Illumination: Illuminates when malfunction occurs in 2 continuous driving cycles.

Normality Judgment
Judge as OK and clear the NG if the following conditions are established.
Judgment Value

Malfunction Criteria	Threshold Value
Continuous time of (Target engine speed – Actual engine speed > –300 rpm)	< 6000 ms
Continuous time of (actual retard amount > 30 °CA)	< 0 ms

Time Needed for Diagnosis: Less than 1 second

- **Final ignition timing diagnosis**

Abnormality Judgment
Judge as NG when the following conditions are established with diagnosis enable conditions successful.
Judgment Value

Malfunction Criteria	Threshold Value
Duration time of (Standard ignition timing – Actual ignition timing ≤ 0 °CA)	> 5000 ms

Time Needed for Diagnosis: 5000 ms
Malfunction Indicator Light Illumination: Illuminates when malfunction occurs in 2 continuous driving cycles.
Normality Judgment
Judge as OK and clear the NG if the following conditions are established.
Judgment Value

Malfunction Criteria	Threshold Value
Duration time of (Standard ignition timing – Actual ignition timing > 0 °CA)	> 1000 ms

Time Needed for Diagnosis: 1000 ms

DE:DTC P2096 POST CATALYST FUEL TRIM SYSTEM TOO LEAN (BANK 1)

1. OUTLINE OF DIAGNOSIS

Detect the malfunction of fuel system from the size of the sub feedback learning value.
Control the sub feedback learning and judge as NG when the learning value is in the lean zone.

2. COMPONENT DESCRIPTION

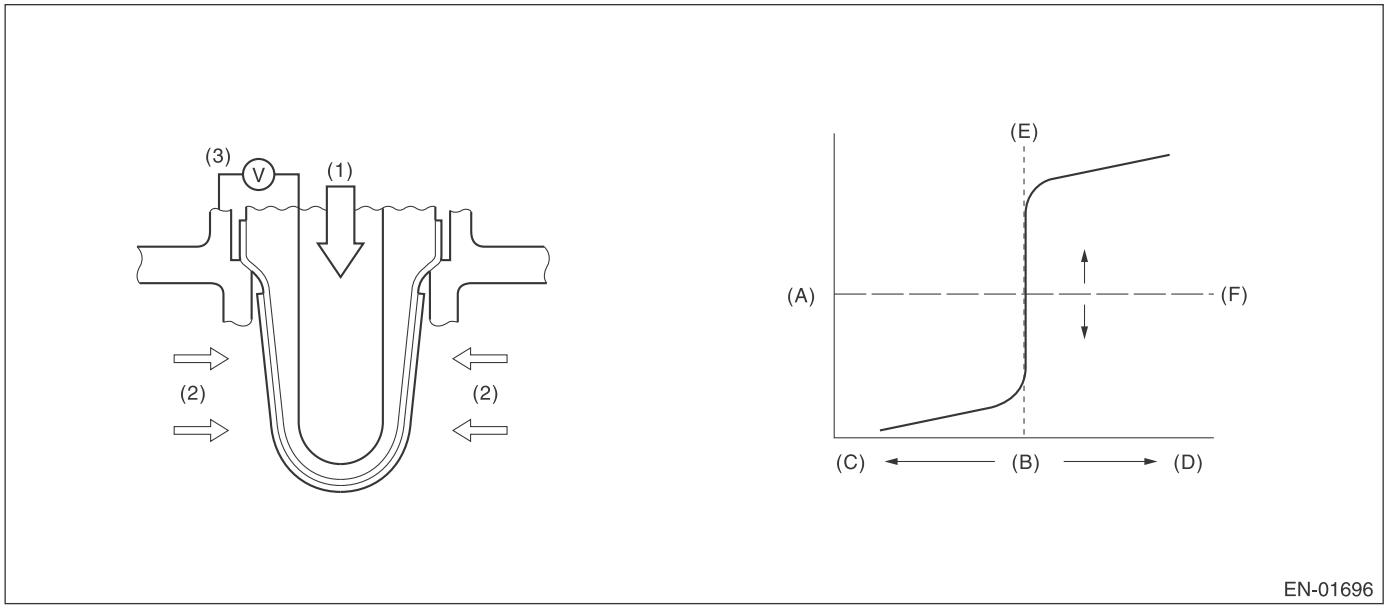

(A)	Electromotive force	(B)	Air fuel ratio	(C)	Rich
(D)	Lean	(E)	Theoretical air fuel ratio	(F)	Comparative voltage
(1)	Atmosphere	(2)	Exhaust gas	(3)	Electromotive force

3. ENABLE CONDITION

Secondary Parameters	Enable Conditions
Conditions for carrying out the sub feedback learning	Completed
Continuous time when all conditions are established.	≥ 1 s

4. GENERAL DRIVING CYCLE

Perform the diagnosis continuously when the vehicle is idling or running at a constant speed of 80 km/h (50 MPH) or more.

5. DIAGNOSTIC METHOD

• Abnormality Judgment

If the duration of time while the following conditions are met is longer than the time indicated, judge as NG.

Judgment Value

Malfunction Criteria	Threshold Value
Sub feedback learning value	< –0.032

Time Needed for Diagnosis: 5 s × 1 time(s)
Malfunction Indicator Light Illumination: Illuminates when malfunction occurs in 2 continuous driving cycles.

• Normality Judgment

Judge as OK and clear the NG if the continuous time while the following conditions are established is more than the predetermined time.

Judgment Value

Malfunction Criteria	Threshold Value
Sub feedback learning value	≥ –0.032 + 0

Time Needed for Diagnosis: 5 s

DF:DTC P2097 POST CATALYST FUEL TRIM SYSTEM TOO RICH (BANK 1)

1. OUTLINE OF DIAGNOSIS

Detect the malfunction of fuel system from the size of the sub feedback learning value.
Sub feedback learning is being performed. When the learning value goes to the rich side, judge as NG.

2. COMPONENT DESCRIPTION

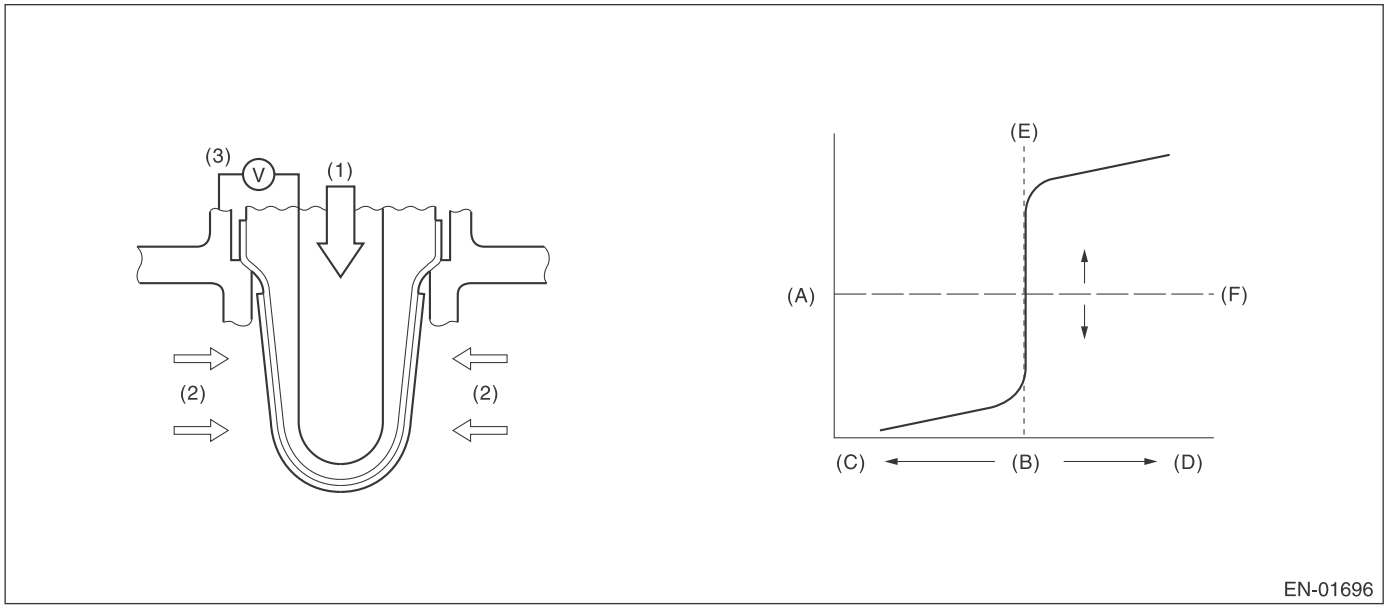

(A)	Electromotive force	(B)	Air fuel ratio	(C)	Rich
(D)	Lean	(E)	Theoretical air fuel ratio	(F)	Comparative voltage
(1)	Atmosphere	(2)	Exhaust gas	(3)	Electromotive force

3. ENABLE CONDITION

Secondary Parameters	Enable Conditions
Conditions for carrying out the sub feedback learning	Completed
Continuous time when all conditions are established.	≥ 1 s

4. GENERAL DRIVING CYCLE

Perform the diagnosis continuously when the vehicle is idling or running at a constant speed of 80 km/h (50 MPH) or more.

5. DIAGNOSTIC METHOD

• Abnormality Judgment

If the duration of time while the following conditions are met is longer than the time indicated, judge as NG.

Judgment Value

Malfunction Criteria	Threshold Value
Sub feedback learning value	≥ 0.032 (PZEV model) ≥ 0.02 (except for PZEV model)

Time Needed for Diagnosis: 5 s × 1 time(s)
Malfunction Indicator Light Illumination: Illuminates when malfunction occurs in 2 continuous driving cycles.

• Normality Judgment

Judge as OK and clear the NG if the continuous time while the following conditions are established is more than the predetermined time.

Judgment Value

Malfunction Criteria	Threshold Value
Sub feedback learning value	< 0.032 + 0 (PZEV model) < 0.02 + 0 (except for PZEV model)

Time Needed for Diagnosis: 5 s

DG:DTC P2101 THROTTLE ACTUATOR CONTROL MOTOR CIRCUIT RANGE/ PERFORMANCE

1. OUTLINE OF DIAGNOSIS

Judge as NG when the motor current becomes large or drive circuit is heated.

2. COMPONENT DESCRIPTION

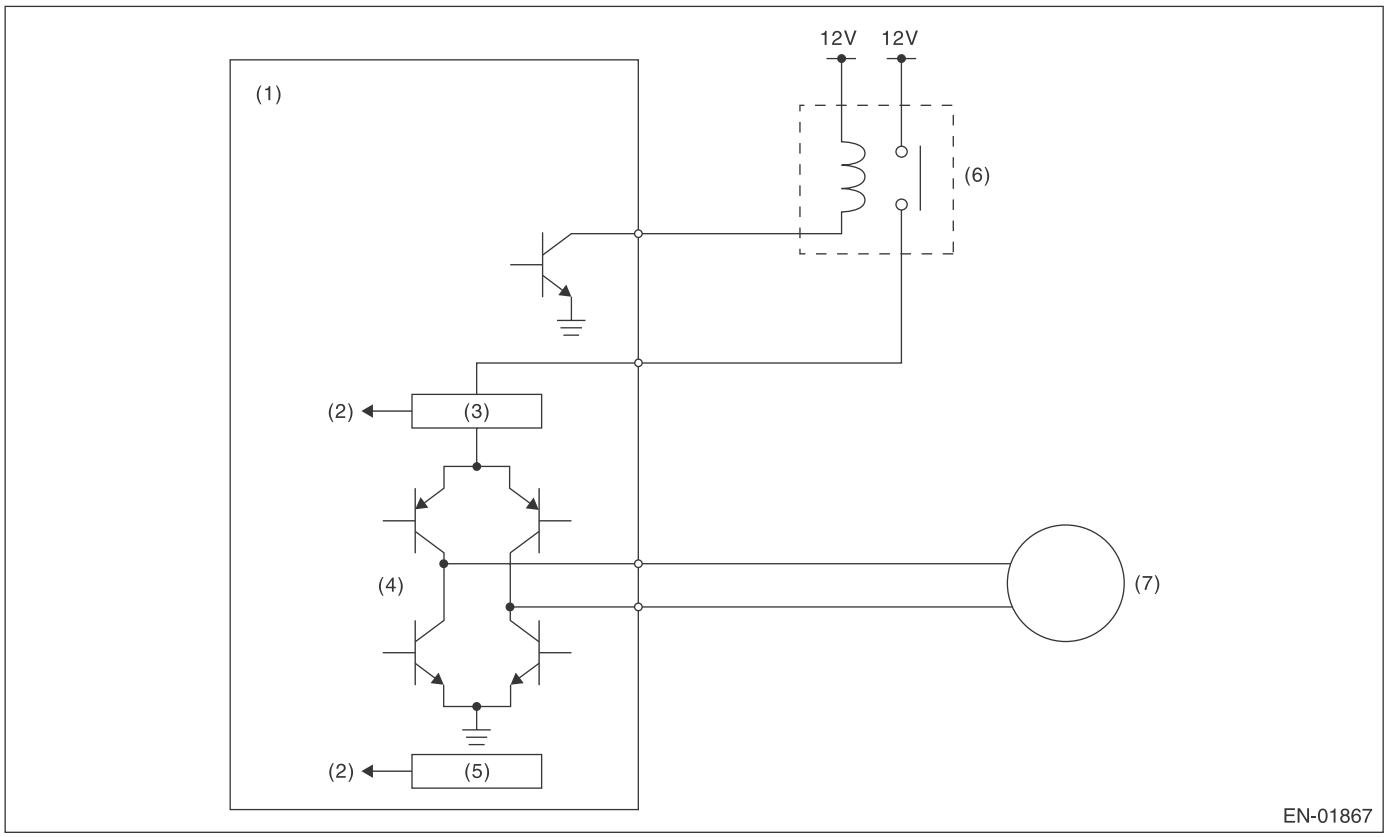

(1) Engine control module (ECM)
(2) Detecting circuit
(3) Overcurrent detection circuit
(4) Drive circuit
(5) Temperature detection circuit
(6) Electronic throttle control relay
(7) Motor

3. ENABLE CONDITION

Secondary Parameters	Enable Conditions
Under control of electronic throttle control	ON

4. GENERAL DRIVING CYCLE

Always perform the diagnosis continuously.

5. DIAGNOSTIC METHOD

Judge as OK and clear the NG when the malfunction criteria below are met.

Judgment Value

Malfunction Criteria	Threshold Value
Motor current	≤ 8 A
Drive circuit inner temperature	≤ 175°C (347°F)

Time Needed for Diagnosis:

- 500 ms (NG judgment)
- 2000 ms (OK judgment)

Malfunction Indicator Light Illumination: Illuminates as soon as a malfunction occurs.

DH:DTC P2102 THROTTLE ACTUATOR CONTROL MOTOR CIRCUIT LOW

1. OUTLINE OF DIAGNOSIS

Judge as NG when the electronic throttle control power is not supplied even when ECM sets the electronic throttle control relay to ON.

2. COMPONENT DESCRIPTION

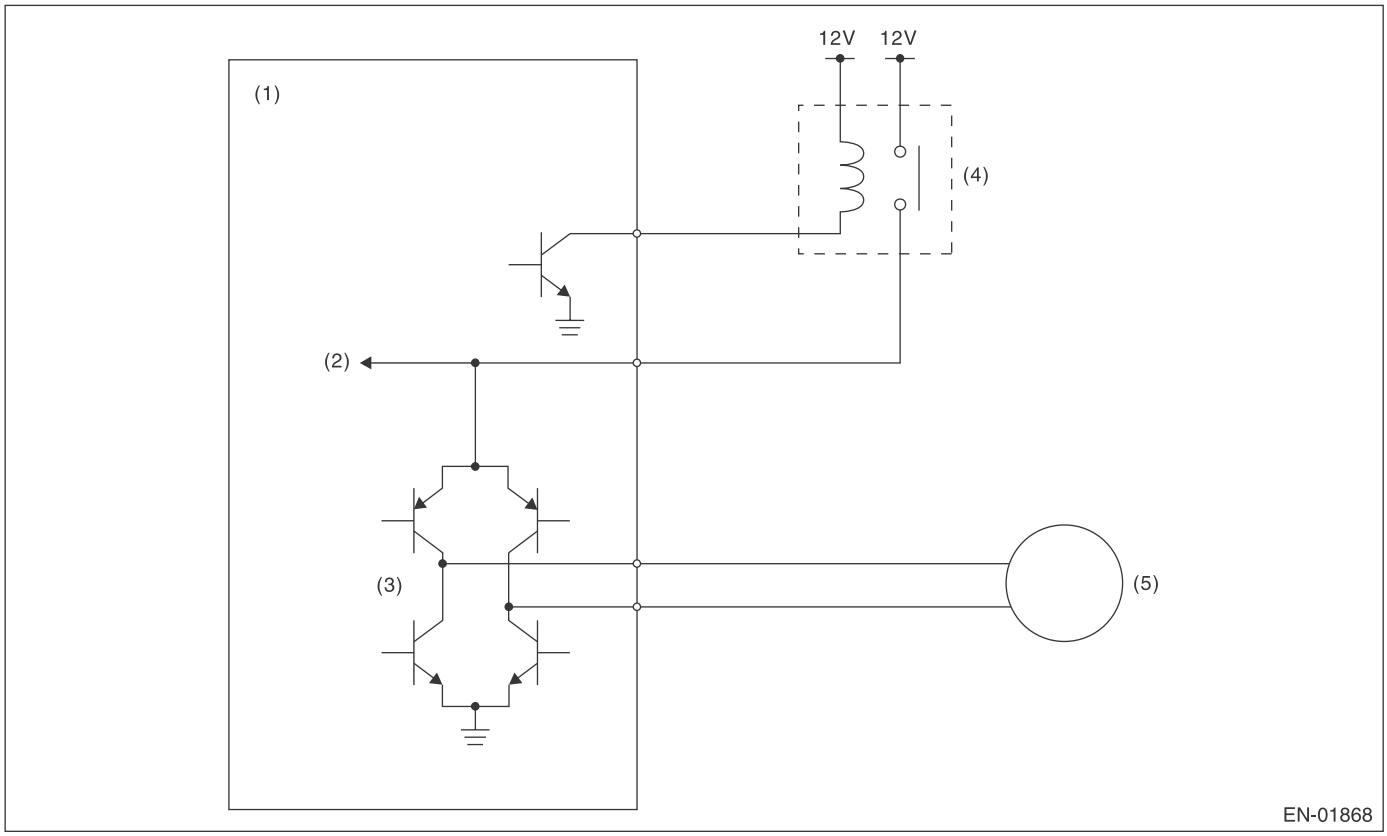

(1) Engine control module (ECM)
(2) Voltage detection circuit
(3) Drive circuit
(4) Electronic throttle control relay
(5) Motor

3. ENABLE CONDITION

Secondary Parameters	Enable Conditions
Electronic throttle control relay output	ON

4. GENERAL DRIVING CYCLE

Always perform the diagnosis continuously.

5. DIAGNOSTIC METHOD

Judge as OK and clear the NG when the malfunction criteria below are met.

Judgment Value

Malfunction Criteria	Threshold Value
Motor power voltage	≥ 5 V

Time Needed for Diagnosis:

- 400 ms (NG judgment)
- 2000 ms (OK judgment)

Malfunction Indicator Light Illumination: Illuminates as soon as a malfunction occurs.

DI: DTC P2103 THROTTLE ACTUATOR CONTROL MOTOR CIRCUIT HIGH

1. OUTLINE OF DIAGNOSIS

Judge as NG when the electronic throttle control power is supplied even when ECM sets the electronic throttle control relay to OFF.

2. COMPONENT DESCRIPTION

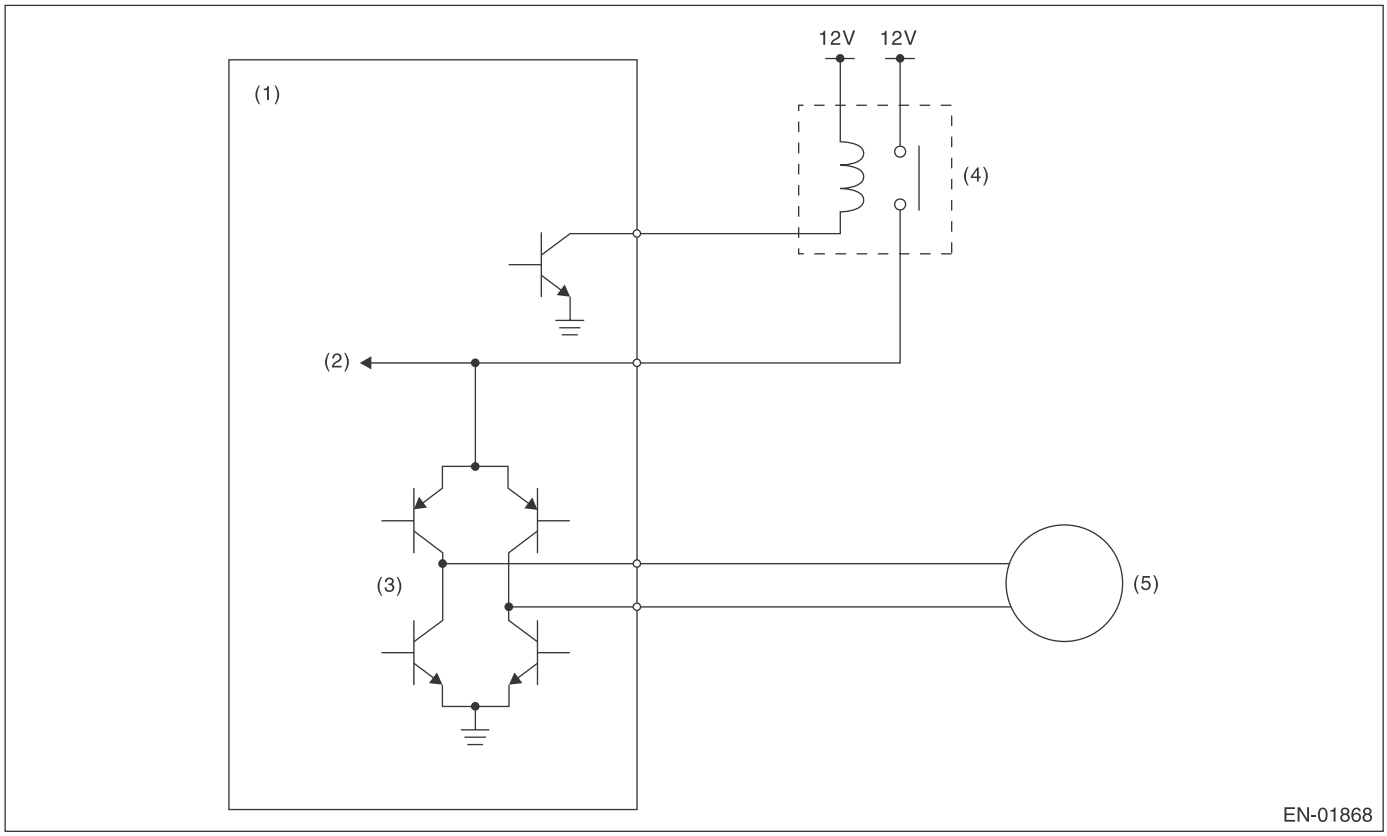

(1) Engine control module (ECM)
(2) Voltage detection circuit
(3) Drive circuit
(4) Electronic throttle control relay
(5) Motor

3. ENABLE CONDITION

Secondary Parameters	Enable Conditions
Electronic throttle control relay output	OFF

4. GENERAL DRIVING CYCLE

- When ignition switch ON → OFF
- Ignition switch OFF → ON (Only after clearing memory)

5. DIAGNOSTIC METHOD

Judge as OK and clear the NG when the malfunction criteria below are met.

Judgment Value

Malfunction Criteria	Threshold Value
Motor power voltage	≤ 5 V

Time Needed for Diagnosis:

- 600 ms (NG judgment)
- 400 ms (OK judgment)

Malfunction Indicator Light Illumination: Illuminates as soon as a malfunction occurs.

DJ:DTC P2109 THROTTLE/PEDAL POSITION SENSOR “A” MINIMUM STOP PERFORMANCE

1. OUTLINE OF DIAGNOSIS

Judge as NG when full close point learning cannot conducted or abnormal value is detected.

2. COMPONENT DESCRIPTION

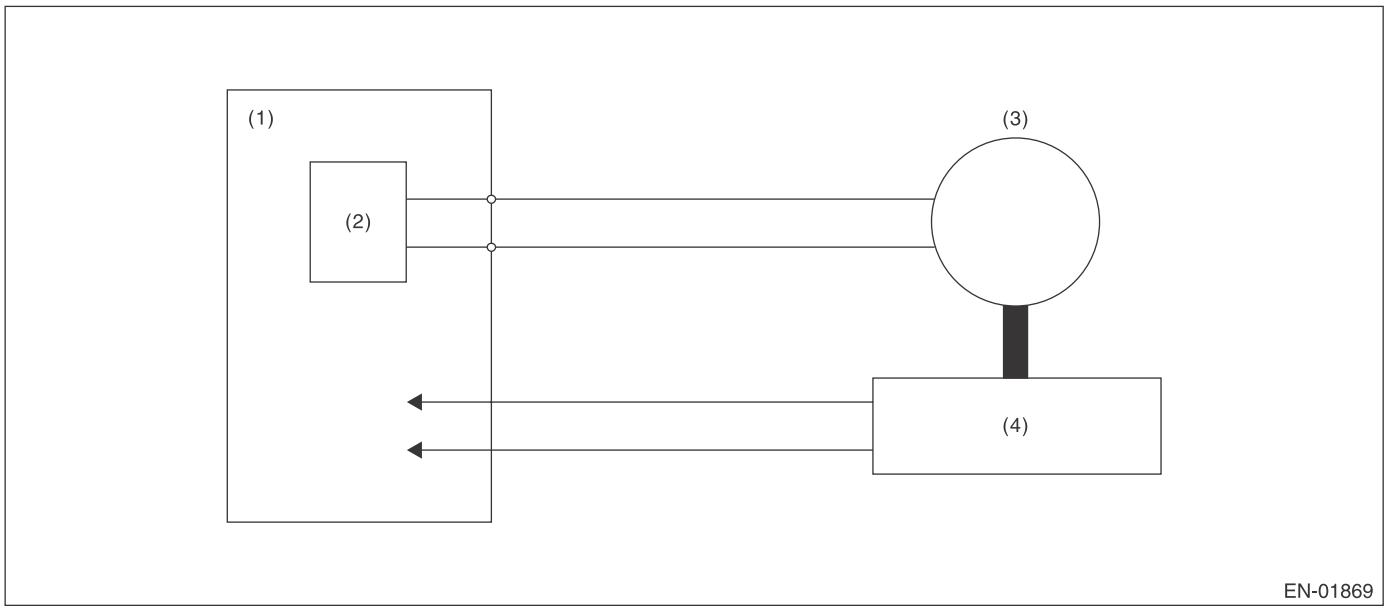

(1) Engine control module (ECM)
(2) Drive circuit
(3) Motor
(4) Throttle position sensor

3. ENABLE CONDITION

Secondary Parameters	Enable Conditions
Ignition switch	ON → OFF
Ignition switch (only after clear memory)	OFF → ON

4. GENERAL DRIVING CYCLE

Perform the diagnosis at full closed point learning.

5. DIAGNOSTIC METHOD

Judge as OK and clear the NG when the malfunction criteria below are met.

Judgment Value

Malfunction Criteria	Threshold Value
Throttle sensor opening angle at full close point learning	10.127° or more, 19.872° or less
Throttle opening angle when the ignition switch is ON – Throttle minimum stop position	≥ 1.683°

Time Needed for Diagnosis: 8 — 80 ms
Malfunction Indicator Light Illumination: Illuminates as soon as a malfunction occurs.

DK:DTC P2122 THROTTLE/PEDAL POSITION SENSOR/SWITCH “D” CIRCUIT LOW INPUT

1. OUTLINE OF DIAGNOSIS

Detect the open or short circuit of accelerator pedal position sensor 1.
Judge as NG if out of specification.

2. COMPONENT DESCRIPTION

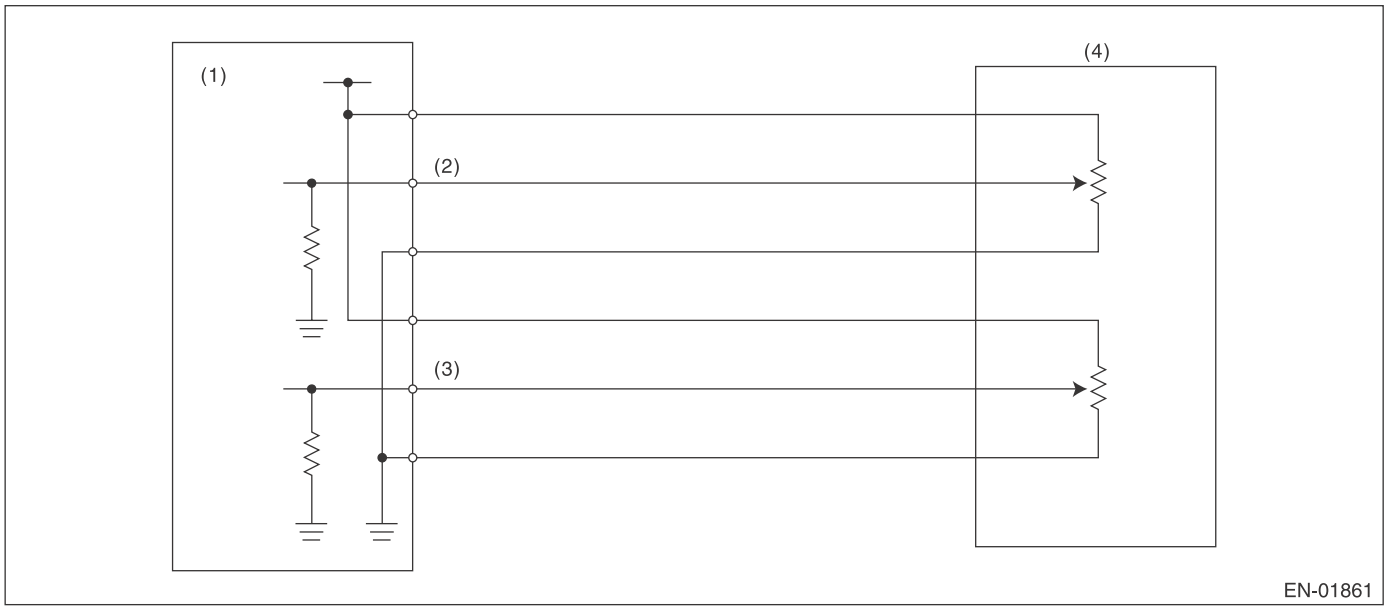

(1) Engine control module (ECM)
(2) Accelerator pedal position sensor 1 signal
(3) Accelerator pedal position sensor 2 signal
(4) Accelerator pedal position sensor

3. ENABLE CONDITION

Secondary Parameters	Enable Conditions
Ignition switch	ON
Battery voltage	≥ 6 V

4. GENERAL DRIVING CYCLE

Always perform the diagnosis continuously.

5. DIAGNOSTIC METHOD

• Abnormality Judgment

If the duration of time while the following conditions are met is longer than the time indicated, judge as NG.

Judgment Value

Malfunction Criteria	Threshold Value
Sensor 1 input voltage	< 0.217 V

Time Needed for Diagnosis: 100 ms
Malfunction Indicator Light Illumination: Illuminates as soon as a malfunction occurs.

• Normality Judgment

Judge as OK and clear the NG if the continuous time while the following conditions are established is more than the predetermined time.

Judgment Value

Malfunction Criteria	Threshold Value
Sensor 1 input voltage	≥ 0.217 V

Time Needed for Diagnosis: 100 ms

DL:DTC P2123 THROTTLE/PEDAL POSITION SENSOR/SWITCH “D” CIRCUIT HIGH INPUT

1. OUTLINE OF DIAGNOSIS

Detect the open or short circuit of accelerator pedal position sensor 1.
Judge as NG if out of specification.

2. COMPONENT DESCRIPTION

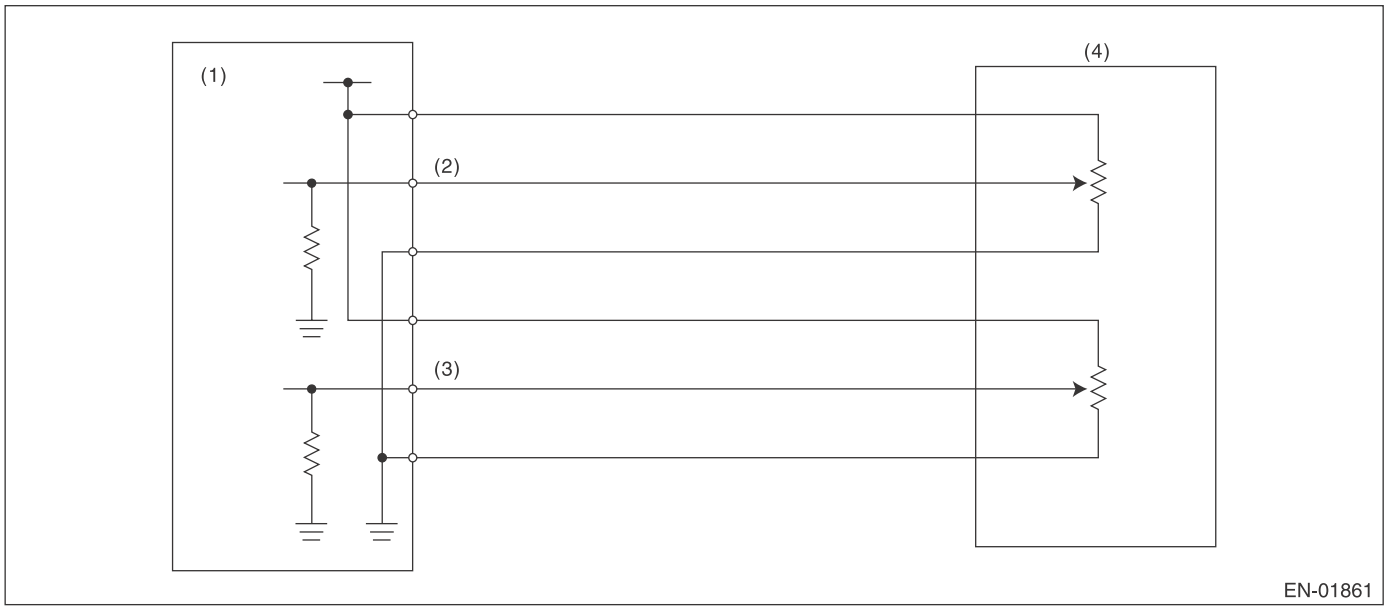

(1) Engine control module (ECM)
(2) Accelerator pedal position sensor 1 signal
(3) Accelerator pedal position sensor 2 signal
(4) Accelerator pedal position sensor

3. ENABLE CONDITION

Secondary Parameters	Enable Conditions
Ignition switch	ON
Battery voltage	≥ 6 V

4. GENERAL DRIVING CYCLE

Always perform the diagnosis continuously.

5. DIAGNOSTIC METHOD

• Abnormality Judgment

If the duration of time while the following conditions are met is longer than the time indicated, judge as NG.

Judgment Value

Malfunction Criteria	Threshold Value
Sensor 1 input voltage	≥ 4.783 V

Time Needed for Diagnosis: 32 ms
Malfunction Indicator Light Illumination: Illuminates as soon as a malfunction occurs.

• Normality Judgment

Judge as OK and clear the NG if the continuous time while the following conditions are established is more than the predetermined time.

Judgment Value

Malfunction Criteria	Threshold Value
Sensor 1 input voltage	< 4.783 V

Time Needed for Diagnosis: 32 ms

DM:DTC P2127 THROTTLE/PEDAL POSITION SENSOR/SWITCH “E” CIRCUIT LOW INPUT

1. OUTLINE OF DIAGNOSIS

Detect the open or short circuit of accelerator pedal position sensor 2.
Judge as NG if out of specification.

2. COMPONENT DESCRIPTION

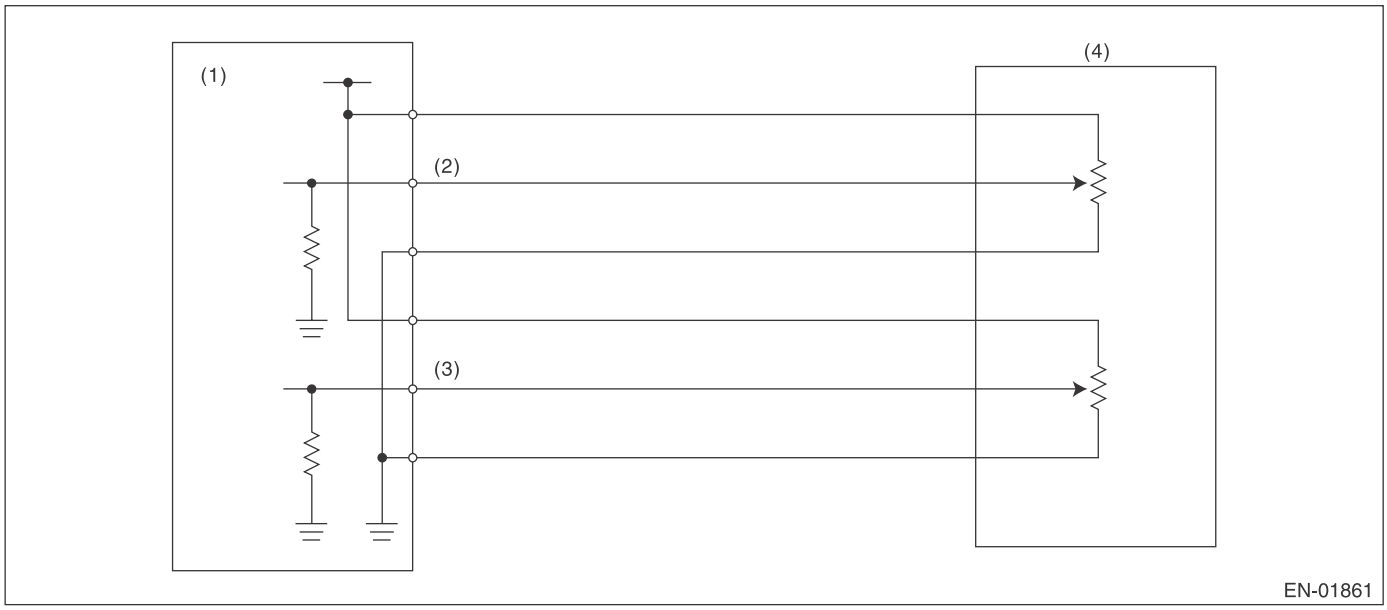

(1) Engine control module (ECM)
(2) Accelerator pedal position sensor 1 signal
(3) Accelerator pedal position sensor 2 signal
(4) Accelerator pedal position sensor

3. ENABLE CONDITION

Secondary Parameters	Enable Conditions
Ignition switch	ON
Battery voltage	≥ 6 V

4. GENERAL DRIVING CYCLE

Always perform the diagnosis continuously.

5. DIAGNOSTIC METHOD

• Abnormality Judgment

If the duration of time while the following conditions are met is longer than the time indicated, judge as NG.

Judgment Value

Malfunction Criteria	Threshold Value
Sensor 2 input voltage	< 0.217 V

Time Needed for Diagnosis: 100 ms
Malfunction Indicator Light Illumination: Illuminates as soon as a malfunction occurs.

• Normality Judgment

Judge as OK and clear the NG if the continuous time while the following conditions are established is more than the predetermined time.

Judgment Value

Malfunction Criteria	Threshold Value
Sensor 2 input voltage	≥ 0.217 V

Time Needed for Diagnosis: 100 ms

DN:DTC P2128 THROTTLE/PEDAL POSITION SENSOR/SWITCH “E” CIRCUIT HIGH INPUT

1. OUTLINE OF DIAGNOSIS

Detect the open or short circuit of accelerator pedal position sensor 2.
Judge as NG if out of specification.

2. COMPONENT DESCRIPTION

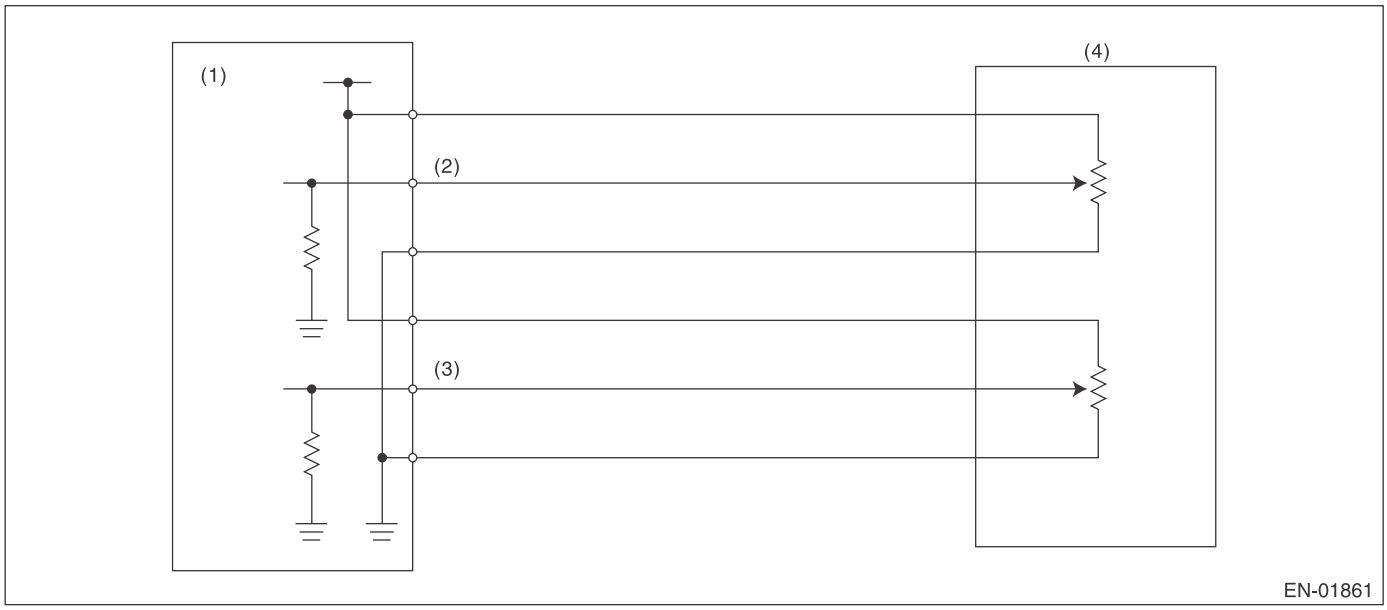

(1) Engine control module (ECM)
(2) Accelerator pedal position sensor 1 signal
(3) Accelerator pedal position sensor 2 signal
(4) Accelerator pedal position sensor

3. ENABLE CONDITION

Secondary Parameters	Enable Conditions
Ignition switch	ON
Battery voltage	≥ 6 V

4. GENERAL DRIVING CYCLE

Always perform the diagnosis continuously.

5. DIAGNOSTIC METHOD

• Abnormality Judgment

If the duration of time while the following conditions are met is longer than the time indicated, judge as NG.

Judgment Value

Malfunction Criteria	Threshold Value
Sensor 2 input voltage	≥ 4.783 V

Time Needed for Diagnosis: 100 ms
Malfunction Indicator Light Illumination: Illuminates as soon as a malfunction occurs.

• Normality Judgment

Judge as OK and clear the NG if the continuous time while the following conditions are established is more than the predetermined time.

Judgment Value

Malfunction Criteria	Threshold Value
Sensor 2 input voltage	< 4.783 V

Time Needed for Diagnosis: 100 ms

DO:DTC P2135 THROTTLE/PEDAL POSITION SENSOR/SWITCH “A”/“B” VOLTAGE CORRELATION

1. OUTLINE OF DIAGNOSIS

Judge as NG when the signal level of throttle position sensor 1 is different from the throttle position sensor 2.

2. COMPONENT DESCRIPTION

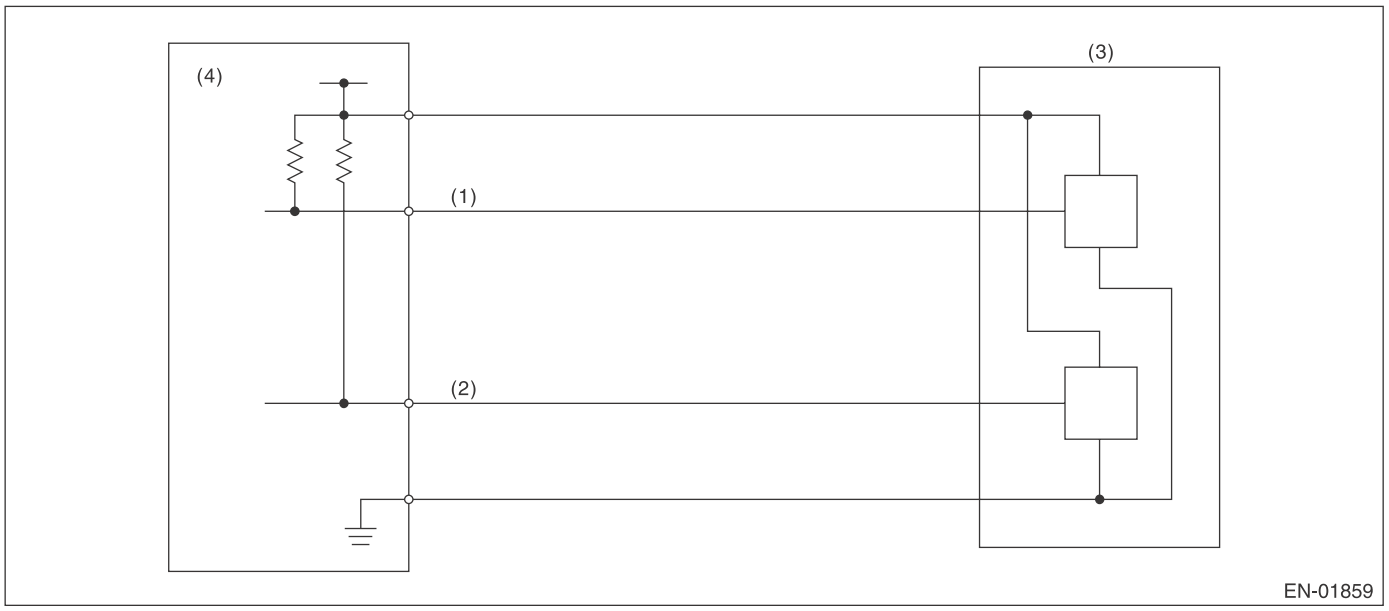

(1) Throttle position sensor 1 signal
(2) Throttle position sensor 2 signal
(3) Throttle position sensor
(4) Engine control module (ECM)

3. ENABLE CONDITION

Secondary Parameters	Enable Conditions
Ignition switch	ON
Battery voltage	≥ 6 V

4. GENERAL DRIVING CYCLE

Always perform the diagnosis continuously.

5. DIAGNOSTIC METHOD

• Abnormality Judgment

If the duration of time while the following conditions are met is longer than the time indicated, judge as NG.

Judgment Value

Malfunction Criteria	Threshold Value
Signal difference between two sensors	Within the NG range of **judgment value detail**

Details of Judgment Value

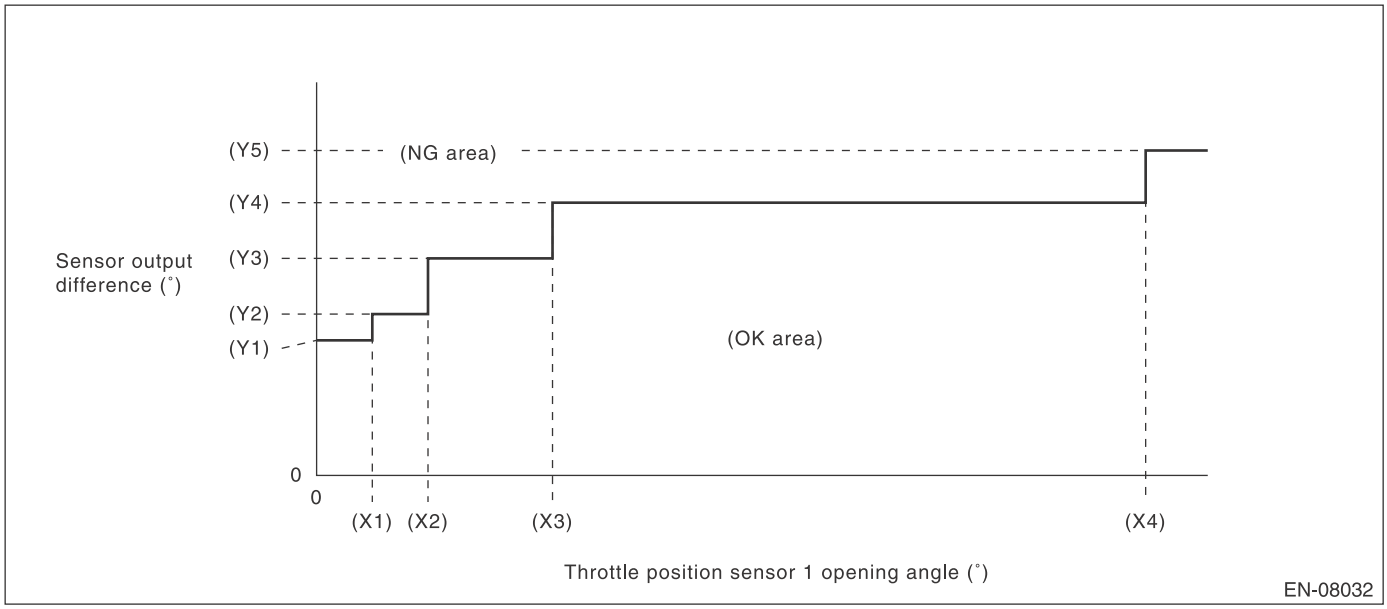

(X1) 2.125 °
(X2) 4.25 °
(X3) 9 °
(X4) 31.625 °

(Y1) 5.15 °
(Y2) 6.15 °
(Y3) 8.28 °
(Y4) 10.4 °
(Y5) 12.4 °

Time Needed for Diagnosis: 212 ms
Malfunction Indicator Light Illumination: Illuminates as soon as a malfunction occurs.

• Normality Judgment

Judge as OK and clear the NG if the continuous time while the following conditions are established is more than the predetermined time.

Judgment Value

Malfunction Criteria	Threshold Value
Signal difference between two sensors	Within the OK range of **judgment value detail**

Time Needed for Diagnosis: 24 ms

DP:DTC P2138 THROTTLE/PEDAL POSITION SENSOR/SWITCH “D”/“E” VOLTAGE CORRELATION

1. OUTLINE OF DIAGNOSIS

Judge as NG when the signal level of throttle position sensor 1 is different from the throttle position sensor 2.

2. COMPONENT DESCRIPTION

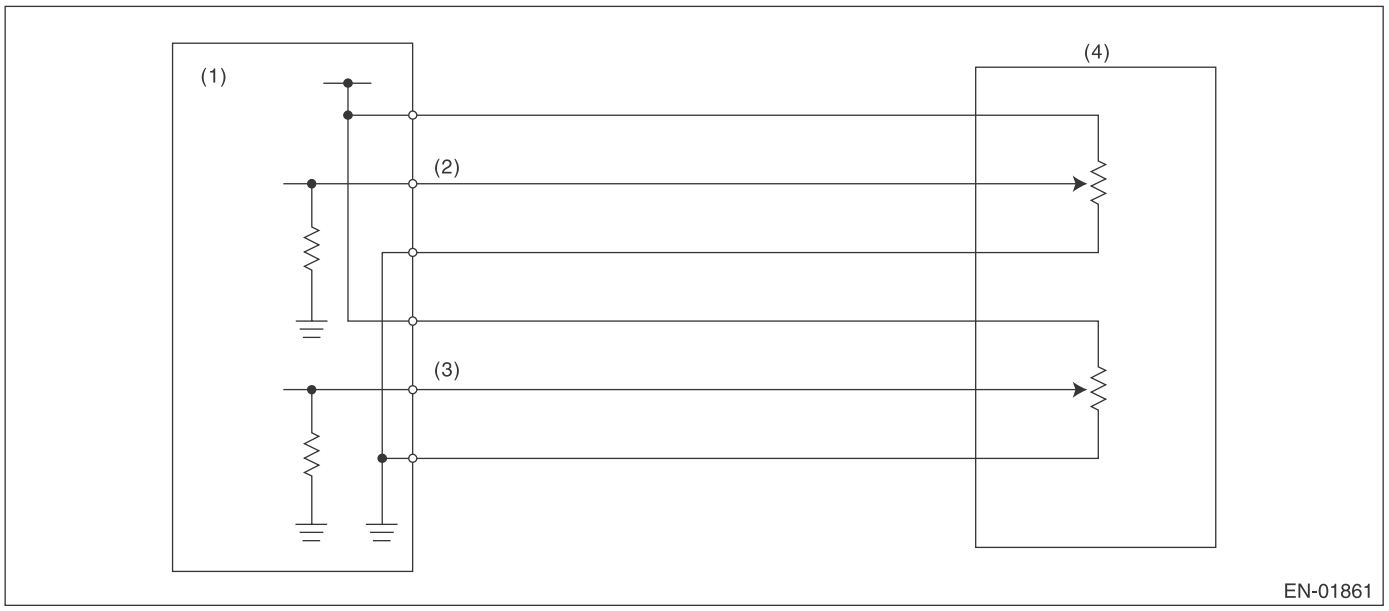

(1) Engine control module (ECM)
(2) Accelerator pedal position sensor 1 signal
(3) Accelerator pedal position sensor 2 signal
(4) Accelerator pedal position sensor

3. ENABLE CONDITION

Secondary Parameters	Enable Conditions
Ignition switch	ON
Battery voltage	≥ 6 V

4. GENERAL DRIVING CYCLE

Always perform the diagnosis continuously.

5. DIAGNOSTIC METHOD

• Abnormality Judgment

If the duration of time while the following conditions are met is longer than the time indicated, judge as NG.

Judgment Value

Malfunction Criteria	Threshold Value
Signal difference between two sensors	Within the NG range of **judgment value detail**

Details of Judgment Value

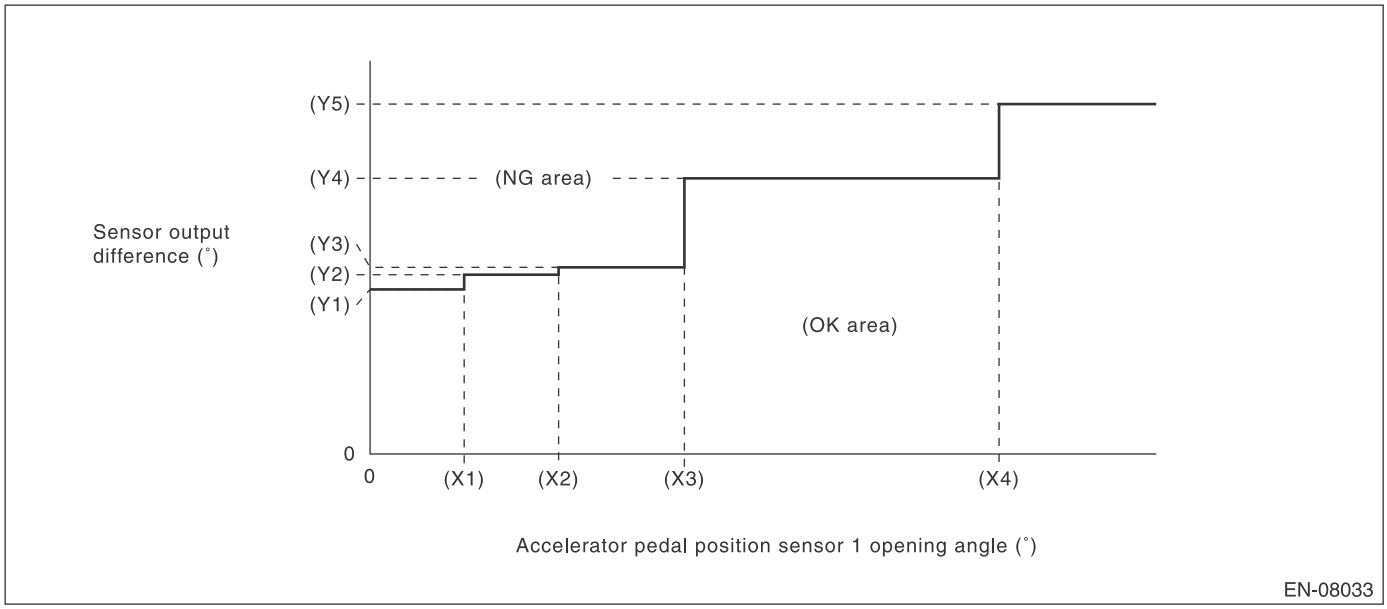

(X1) 0.6 °
(X2) 1.2 °
(X3) 2 °
(X4) 4 °

(Y1) 1.465 °
(Y2) 1.597 °
(Y3) 1.663 °
(Y4) 2.455 °
(Y5) 3.116 °

Time Needed for Diagnosis: 116 ms
Malfunction Indicator Light Illumination: Illuminates as soon as a malfunction occurs.

• Normality Judgment

Judge as OK and clear the NG if the continuous time while the following conditions are established is more than the predetermined time.

Judgment Value

Malfunction Criteria	Threshold Value
Signal difference between two sensors	Within the OK range of **judgment value detail**

Time Needed for Diagnosis: 116 ms

DQ:DTC P2227 BAROMETRIC PRESSURE CIRCUIT RANGE/PERFORMANCE

1. OUTLINE OF DIAGNOSIS

Detect the malfunction of barometric pressure sensor output property.
Judge as NG when the barometric pressure sensor output is largely different from the intake manifold pressure at engine start.

2. COMPONENT DESCRIPTION

The barometric pressure sensor is built into the ECM.

3. ENABLE CONDITION

Secondary Parameters	Enable Conditions
Engine speed	< 300 rpm
Vehicle speed	< 1 km/h (0.6 MPH)

4. GENERAL DRIVING CYCLE

Perform the diagnosis once at ignition switch ON.

5. DIAGNOSTIC METHOD

- **Abnormality Judgment**

If the duration of time while the following conditions are met is longer than the time indicated, judge as NG.

Judgment Value

Malfunction Criteria	Threshold Value
|Barometric pressure – Intake manifold pressure|	≥ 26.7 kPa (200 mmHg, 7.9 inHg)
|Intake manifold pressure at engine start – Intake manifold pressure|	< 1.3 kPa (9.99 mmHg, 0.4 inHg)

Time Needed for Diagnosis: 328 ms
Malfunction Indicator Light Illumination: Illuminates when malfunction occurs in 2 continuous driving cycles.

- **Normality Judgment**

Judge as OK and clear the NG if the continuous time while the following conditions are established is more than the predetermined time.

Judgment Value

Malfunction Criteria	Threshold Value
|Barometric pressure – Intake manifold pressure|	< 26.7 kPa (200 mmHg, 7.9 inHg)

Time Needed for Diagnosis: 262 ms

DR:DTC P2228 BAROMETRIC PRESSURE CIRCUIT LOW

1. OUTLINE OF DIAGNOSIS

Detect the open/short circuit of the barometric pressure sensor.
Judge as NG if out of specification.

2. COMPONENT DESCRIPTION

The barometric pressure sensor is built into the ECM.

3. ENABLE CONDITION

Secondary Parameters	Enable Conditions
None	

4. GENERAL DRIVING CYCLE

Always perform the diagnosis continuously.

5. DIAGNOSTIC METHOD

- **Abnormality Judgment**

If the duration of time while the following conditions are met is longer than the time indicated, judge as NG.

Judgment Value

Malfunction Criteria	Threshold Value
Output voltage	< 1.707 V

Time Needed for Diagnosis: 500 ms
Malfunction Indicator Light Illumination: Illuminates as soon as a malfunction occurs.

- **Normality Judgment**

Judge as OK and clear the NG if the continuous time while the following conditions are established is more than the predetermined time.

Judgment Value

Malfunction Criteria	Threshold Value
Output voltage	≥ 1.707 V

Time Needed for Diagnosis: Less than 1 second

DS:DTC P2229 BAROMETRIC PRESSURE CIRCUIT HIGH

1. OUTLINE OF DIAGNOSIS

Detect the open/short circuit of the barometric pressure sensor.
Judge as NG if out of specification.

2. COMPONENT DESCRIPTION

The barometric pressure sensor is built into the ECM.

3. ENABLE CONDITION

Secondary Parameters	Enable Conditions
None	

4. GENERAL DRIVING CYCLE

Always perform the diagnosis continuously.

5. DIAGNOSTIC METHOD

- **Abnormality Judgment**

If the duration of time while the following conditions are met is longer than the time indicated, judge as NG.

Judgment Value

Malfunction Criteria	Threshold Value
Output voltage	≥ 4.234 V

Time Needed for Diagnosis: 500 ms
Malfunction Indicator Light Illumination: Illuminates as soon as a malfunction occurs.

- **Normality Judgment**

Judge as OK and clear the NG if the continuous time while the following conditions are established is more than the predetermined time.

Judgment Value

Malfunction Criteria	Threshold Value
Output voltage	< 4.234 V

Time Needed for Diagnosis: Less than 1 second

DT:DTC U0073 CAN FAILURE, BUS 'OFF' DETECTION

1. OUTLINE OF DIAGNOSIS

Detect malfunction of CAN communication.
When CAN communications is not possible, and CAN communications with TCM, VDC CM and body integrated unit is not possible, judge as NG if data from the TCM, VDC CM and body integrated unit are not normal.

2. COMPONENT DESCRIPTION

ECM, TCM, VDC CM and body integrated unit are connected by high speed CAN.

(Common Specifications)
CAN Protocol 2.0 B (Active)
Frame Format: 11 Bit ID Frame (Standard Frame)

(High speed CAN)
Conforms to ISO11898
Communication Speed: 500 kbps

3. ENABLE CONDITIONS

Secondary Parameters	Enable Conditions
None	

4. GENERAL DRIVING CYCLE

Perform the diagnosis continuously after starting the engine.

5. DIAGNOSTIC METHOD

• Abnormality Judgment

Judge as NG when the following conditions are established.

Judgment Value

Malfunction Criteria	Threshold Value
Battery voltage	> 10.9 V
Starter switch	OFF
Engine	run
bus off flag or error warning flag	set (error)
or	
ID received from control module connected to driving system CAN	None during 500 milliseconds
or	
Data updated from control module connected to driving system CAN	None during 2000 milliseconds

Time Needed for Diagnosis: 2 seconds
Malfunction Indicator Light Illumination: Illuminates as soon as a malfunction occurs.

• Normality Judgment

Judge as OK and clear the NG if the continuous time while the following conditions are established is more than the predetermined time.

Judgment Value

Malfunction Criteria	Threshold Value
Battery voltage	> 10.9 V
Starter switch	OFF
Engine	run
bus off flag or error warning flag	clear (No error)
ID received from control module connected to driving system CAN	Yes
Data updated from control module connected to driving system CAN	Yes

Time Needed for Diagnosis: 1000 ms
Malfunction Indicator Light Illumination: Illuminates as soon as a malfunction occurs.

DU:DTC U0101 CAN (TCU) DATA NOT LOADED

1. OUTLINE OF DIAGNOSIS

NOTE:
For the detection standard, refer to DTC U0073. <Ref. to GD(H4SO)-198, DTC U0073 CAN FAILURE, BUS ‘OFF’ DETECTION, Diagnostic Trouble Code (DTC) Detecting Criteria.>

DV:DTC U0122 CAN (VDC) DATA NOT LOADED

1. OUTLINE OF DIAGNOSIS

NOTE:
For the detection standard, refer to DTC U0073. <Ref. to GD(H4SO)-198, DTC U0073 CAN FAILURE, BUS ‘OFF’ DETECTION, Diagnostic Trouble Code (DTC) Detecting Criteria.>

DW:DTC U0140 CAN (BCU) DATA NOT LOADED

1. OUTLINE OF DIAGNOSIS

NOTE:
For the detection standard, refer to DTC U0073. <Ref. to GD(H4SO)-198, DTC U0073 CAN FAILURE, BUS ‘OFF’ DETECTION, Diagnostic Trouble Code (DTC) Detecting Criteria.>

DX:DTC U0402 CAN (TCU) DATA ABNORMAL

1. OUTLINE OF DIAGNOSIS

NOTE:
For the detection standard, refer to DTC U0073. <Ref. to GD(H4SO)-198, DTC U0073 CAN FAILURE, BUS ‘OFF’ DETECTION, Diagnostic Trouble Code (DTC) Detecting Criteria.>

DY:DTC U0416 CAN (VDC) DATA ABNORMAL

1. OUTLINE OF DIAGNOSIS

NOTE:
For the detection standard, refer to DTC U0073. <Ref. to GD(H4SO)-198, DTC U0073 CAN FAILURE, BUS ‘OFF’ DETECTION, Diagnostic Trouble Code (DTC) Detecting Criteria.>

DZ:DTC U0422 CAN (BCU) DATA ABNORMAL

1. OUTLINE OF DIAGNOSIS

NOTE:
For the detection standard, refer to DTC U0073. <Ref. to GD(H4SO)-198, DTC U0073 CAN FAILURE, BUS ‘OFF’ DETECTION, Diagnostic Trouble Code (DTC) Detecting Criteria.>

ENGINE 2 SECTION

This service manual has been prepared to provide SUBARU service personnel with the necessary information and data for the correct maintenance and repair of SUBARU vehicles.
This manual includes the procedures for maintenance, disassembling, reassembling, inspection and adjustment of components and diagnostics for guidance of experienced mechanics.
Please peruse and utilize this manual fully to ensure complete repair work for satisfying our customers by keeping their vehicle in optimum condition. When replacement of parts during repair work is needed, be sure to use SUBARU genuine parts.

All information, illustration and specifications contained in this manual are based on the latest product information available at the time of publication approval.

FUEL INJECTION (FUEL SYSTEMS)	FU(H4DOTC)
EMISSION CONTROL (AUX. EMISSION CONTROL DEVICES)	EC(H4DOTC)
INTAKE (INDUCTION)	IN(H4DOTC)
MECHANICAL	ME(H4DOTC)
EXHAUST	EX(H4DOTC)
COOLING	CO(H4DOTC)
LUBRICATION	LU(H4DOTC)
SPEED CONTROL SYSTEMS	SP(H4DOTC)
IGNITION	IG(H4DOTC)
STARTING/CHARGING SYSTEMS	SC(H4DOTC)
ENGINE (DIAGNOSTICS)	EN(H4DOTC) (diag)
GENERAL DESCRIPTION	GD(H4DOTC)

FUJI HEAVY INDUSTRIES LTD.

G2460BE3

FUEL INJECTION (FUEL SYSTEMS)

FU(H4DOTC)

		Page
1.	General Description	2
2.	Throttle Body	15
3.	Intake Manifold	17
4.	Engine Coolant Temperature Sensor	32
5.	Crankshaft Position Sensor	33
6.	Camshaft Position Sensor	35
7.	Knock Sensor	37
8.	Throttle Position Sensor	39
9.	Mass Air Flow and Intake Air Temperature Sensor	40
10.	Manifold Absolute Pressure Sensor	41
11.	Fuel Injector	43
12.	Tumble Generator Valve Assembly	46
13.	Tumble Generator Valve Actuator	48
14.	Oil Flow Control Solenoid Valve	49
15.	Wastegate Control Solenoid Valve	51
16.	Front Oxygen (A/F) Sensor	53
17.	Rear Oxygen Sensor	55
18.	Engine Control Module (ECM)	57
19.	Main Relay	58
20.	Fuel Pump Relay	60
21.	Electronic Throttle Control Relay	62
22.	Fuel Pump Control Unit	64
23.	Fuel	65
24.	Fuel Tank	67
25.	Fuel Filler Pipe	74
26.	Fuel Pump	78
27.	Fuel Level Sensor	80
28.	Fuel Sub Level Sensor	82
29.	Fuel Filter	84
30.	Fuel Damper	86
31.	Fuel Delivery, Return and Evaporation Lines	87
32.	Fuel System Trouble in General	92

1. General Description

A: SPECIFICATION

Fuel tank	Capacity	70 ℓ (18.5 US gal, 15.4 Imp gal)
	Install locations	Under rear seat
Fuel pump	Type	Impeller
	Shutoff discharge pressure	850 kPa (8.67 kgf/cm^2, 123.3 psi) or less
	Discharge rate	175 ℓ (46.2 US gal, 38.5 Imp gal)/h or more. [12 V at 300 kPa (3.06 kgf/cm^2, 43.5 psi)]
Fuel filter		In-tank type

B: COMPONENT

1. INTAKE MANIFOLD 1

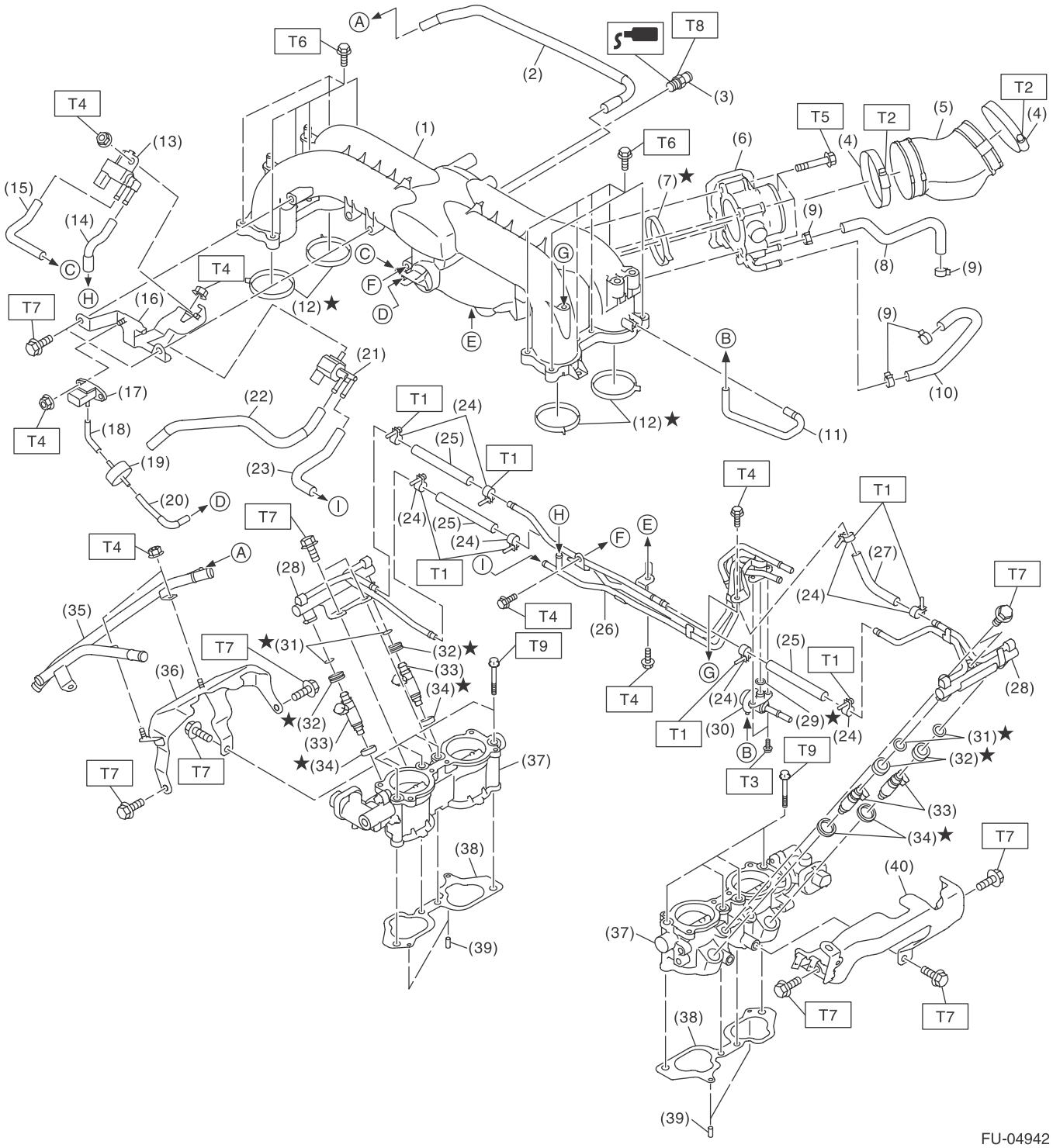

(1) Intake manifold
(2) Vacuum control hose
(3) PCV valve
(4) Clamp
(5) Intake duct
(6) Throttle body
(7) O-ring
(8) Preheater hose A
(9) Clip
(10) Preheater hose B
(11) Pressure regulator vacuum hose
(12) O-ring
(13) Purge control solenoid valve 1
(14) Vacuum hose A
(15) Vacuum hose B
(16) Solenoid valve bracket
(17) Manifold absolute pressure sensor
(18) Vacuum hose C
(19) Filter
(20) Vacuum hose D
(21) Purge control solenoid valve 2
(22) Vacuum hose E
(23) Vacuum hose F
(24) Clamp
(25) Fuel hose A
(26) Fuel delivery pipe
(27) Fuel hose B
(28) Fuel pipe
(29) O-ring
(30) Pressure regulator
(31) O-ring
(32) Grommet
(33) Fuel injector
(34) Seal ring
(35) PCV pipe
(36) Intake manifold protector RH
(37) Tumble generator valve ASSY
(38) Gasket
(39) Knock pin
(40) Intake manifold protector LH

Tightening torque:N·m (kgf-m, ft-lb)
T1: 1.25 (0.1, 0.9)
T2: 3 (0.3, 2.2)
T3: 3.45 (0.4, 2.5)
T4: 6.4 (0.7, 4.7)
T5: 8 (0.8, 5.9)
T6: 8.3 (0.8, 6.1)
T7: 19 (1.9, 14.0)
T8: 23 (2.3, 17.0)
T9: 25 (2.5, 18.4)

2. INTAKE MANIFOLD 2

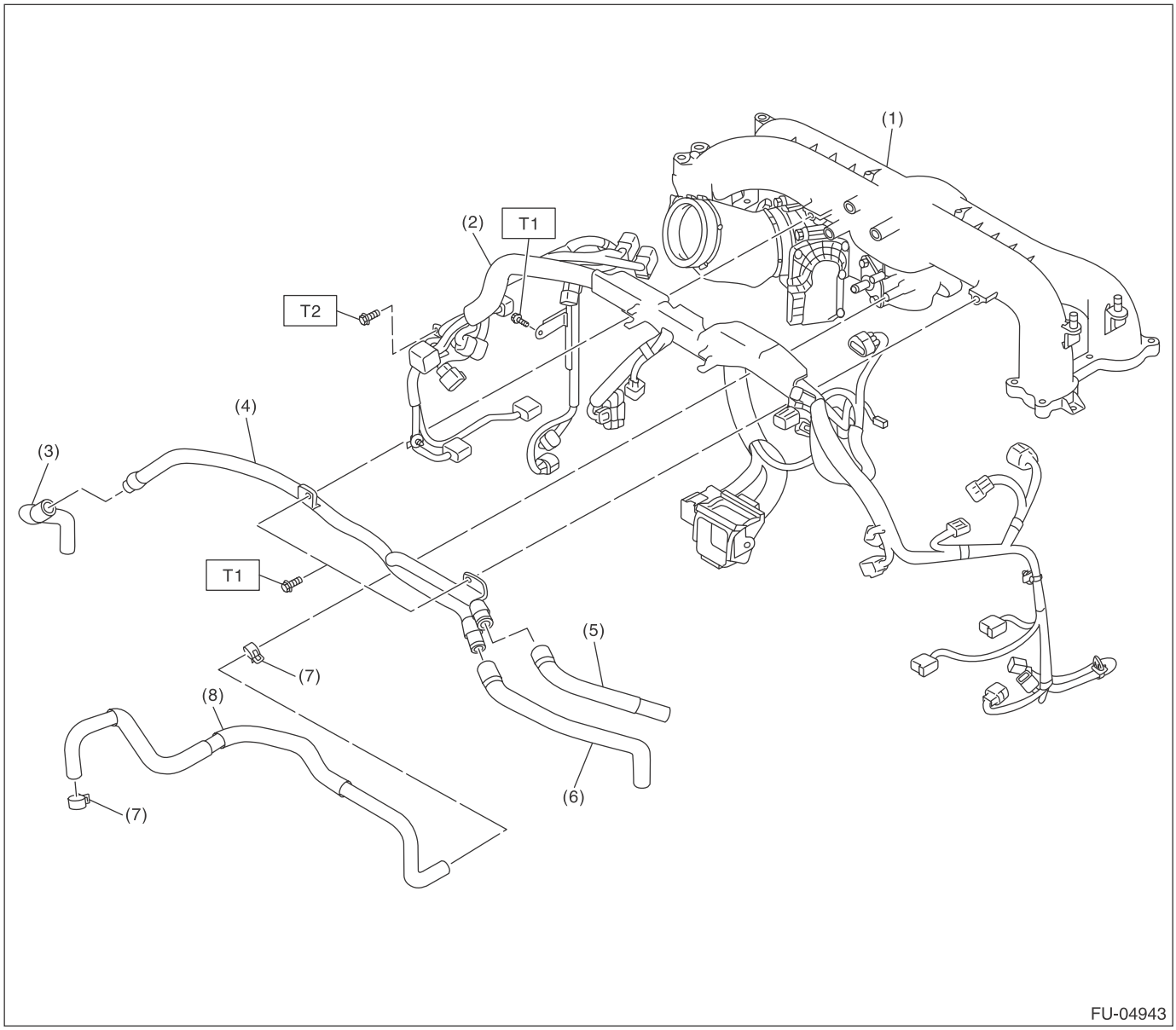

(1) Intake manifold
(2) Engine harness
(3) Vacuum hose A
(4) PCV pipe
(5) Vacuum hose B
(6) Vacuum hose C
(7) Clip
(8) Brake booster vacuum hose

Tightening torque:N·m (kgf-m, ft-lb)
T1: 6.4 (0.7, 4.7)
T2: 19 (1.9, 14.0)

3. CRANKSHAFT POSITION, CAMSHAFT POSITION AND KNOCK SENSORS

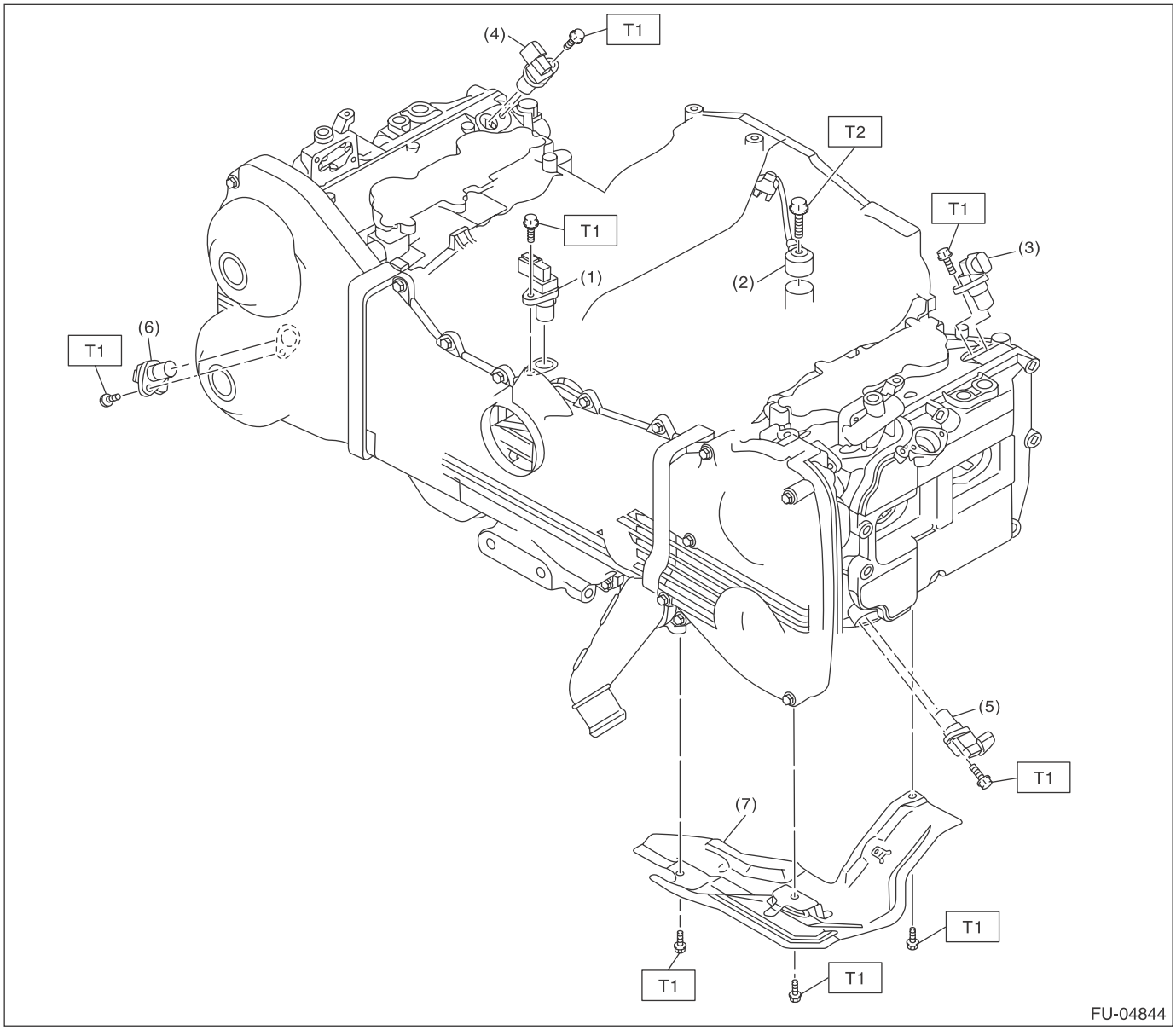

(1)	Crankshaft position sensor	(5)	Exhaust camshaft position sensor LH	***Tightening torque:N·m (kgf-m, ft-lb)***
(2)	Knock sensor	(6)	Exhaust camshaft position sensor RH	***T1: 6.4 (0.7, 4.7)***
(3)	Intake camshaft position sensor LH	(7)	Engine harness cover	***T2: 24 (2.4, 17.7)***
(4)	Intake camshaft position sensor RH			

4. FUEL TANK

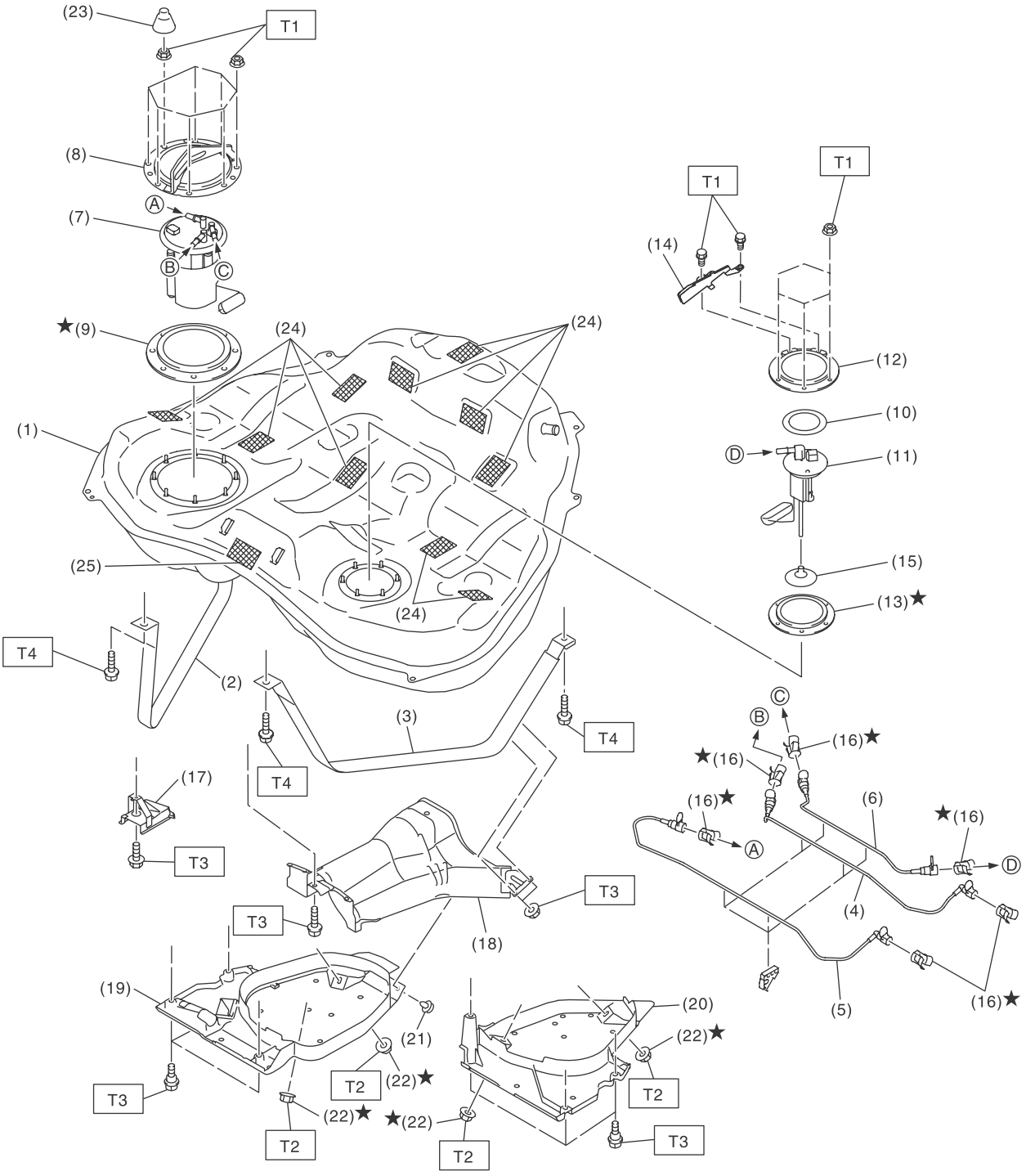

FU-04944

(1) Fuel tank
(2) Fuel tank band RH
(3) Fuel tank band LH
(4) Fuel delivery tube
(5) Fuel return tube
(6) Fuel sub delivery tube
(7) Fuel pump ASSY
(8) Fuel pump upper plate
(9) Fuel pump gasket
(10) Fuel sub level sensor upper plate cushion
(11) Fuel sub level sensor
(12) Fuel sub level sensor upper plate
(13) Fuel sub level sensor gasket
(14) Fuel sub level sensor protector
(15) Fuel sub level sensor filter
(16) Retainer
(17) Stopper
(18) Heat shield cover
(19) Fuel tank protector RH
(20) Fuel tank protector LH
(21) Clip
(22) Self-locking nut
(23) Rubber cap
(24) Cushion
(25) Cushion

Tightening torque:N·m (kgf-m, ft-lb)
T1: 4.4 (0.4, 3.2)
T2: 9 (0.9, 6.6)
T3: 18 (1.8, 13.3)
T4: 33 (3.4, 24.3)

5. FUEL LINE

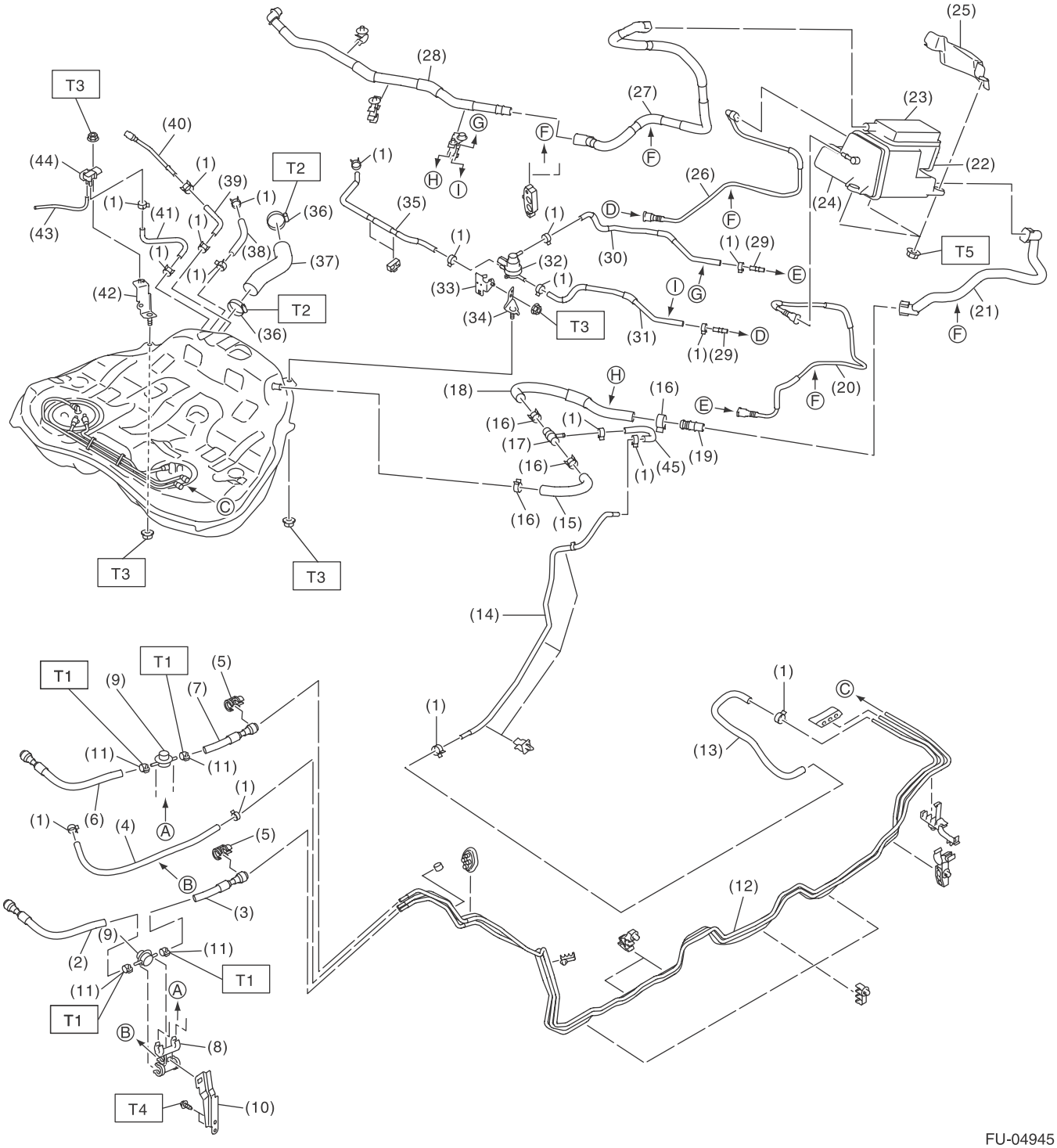
T1
T2
T3
T4
T5
(1)
(2)
(3)
(4)
(5)
(6)
(7)
(8)
(9)
(10)
(11)
(12)
(13)
(14)
(15)
(16)
(17)
(18)
(19)
(20)
(21)
(22)
(23)
(24)
(25)
(26)
(27)
(28)
(29)
(30)
(31)
(32)
(33)
(34)
(35)
(36)
(37)
(38)
(39)
(40)
(41)
(42)
(43)
(44)
(45)
A
B
C
D
E
F
G
H
I
FU-04945

(1) Clip
(2) Fuel return hose A
(3) Fuel return hose B
(4) Evaporation hose
(5) Connect check cover
(6) Fuel delivery hose A
(7) Fuel delivery hose B
(8) Fuel damper holder
(9) Fuel damper
(10) Fuel damper bracket
(11) Clamp
(12) Fuel pipe ASSY
(13) Purge hose A
(14) Purge pipe
(15) Air vent hose A
(16) Clip
(17) Connector
(18) Air vent hose B
(19) Connector
(20) PCV drain tube
(21) Vent tube
(22) Drain valve
(23) Drain filter
(24) Canister
(25) Canister protector
(26) Charge tube
(27) Canister drain tube
(28) Drain tube ASSY
(29) Connector
(30) PCV drain hose
(31) PCV outlet hose
(32) Pressure control solenoid valve
(33) Pressure control solenoid valve bracket A
(34) Pressure control solenoid valve bracket B
(35) PCV inlet hose
(36) Clamp
(37) Fuel filler hose
(38) Charge hose
(39) Circulate hose
(40) Circulate tube
(41) Pressure hose
(42) Fuel tank pressure sensor bracket
(43) Vacuum hose
(44) Fuel tank pressure sensor
(45) Purge hose B

Tightening torque:N·m (kgf-m, ft-lb)
T1: 1.25 (0.1, 0.9)
T2: 2.5 (0.3, 1.8)
T3: 7.35 (0.7, 5.4)
T4: 7.5 (0.8, 5.5)
T5: 8 (0.8, 5.9)

6. FUEL FILLER PIPE

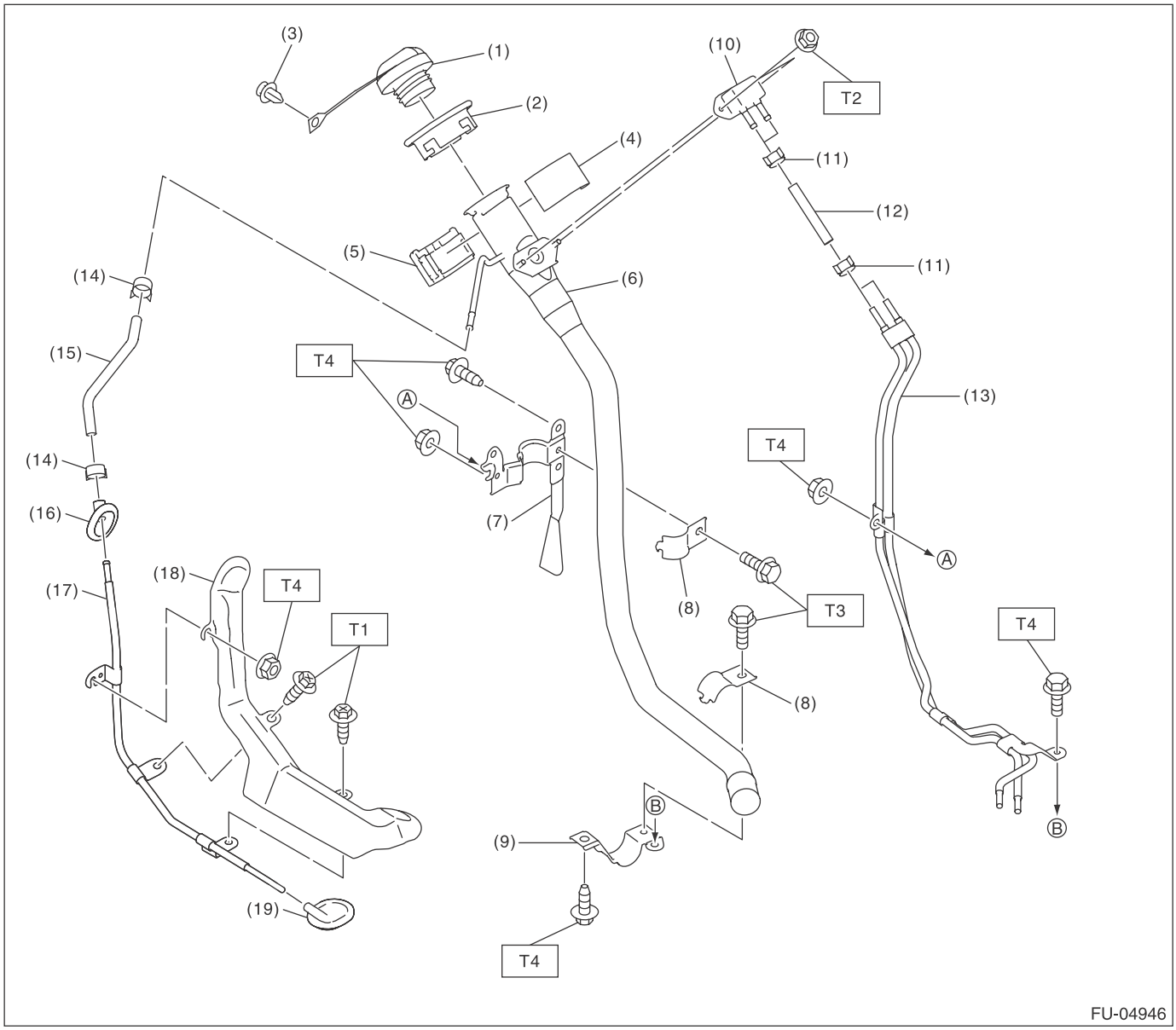

(1) Fuel filler cap
(2) Fuel filler pipe protector
(3) Clip
(4) Neck holder A
(5) Neck holder B
(6) Fuel filler pipe
(7) Fuel filler pipe bracket A
(8) Fuel filler pipe bracket B
(9) Fuel filler pipe bracket C
(10) Shut valve
(11) Clip
(12) Evaporation hose A
(13) Evaporation pipe A
(14) Clip
(15) Evaporation hose B
(16) Grommet
(17) Evaporation pipe B
(18) Evaporation pipe protector
(19) Grommet

Tightening torque:N·m (kgf-m, ft-lb)
T1: 1 (0.1, 0.7)
T2: 4.5 (0.5, 3.3)
T3: 7.35 (0.7, 5.4)
T4: 7.5 (0.8, 5.5)

7. FUEL PUMP

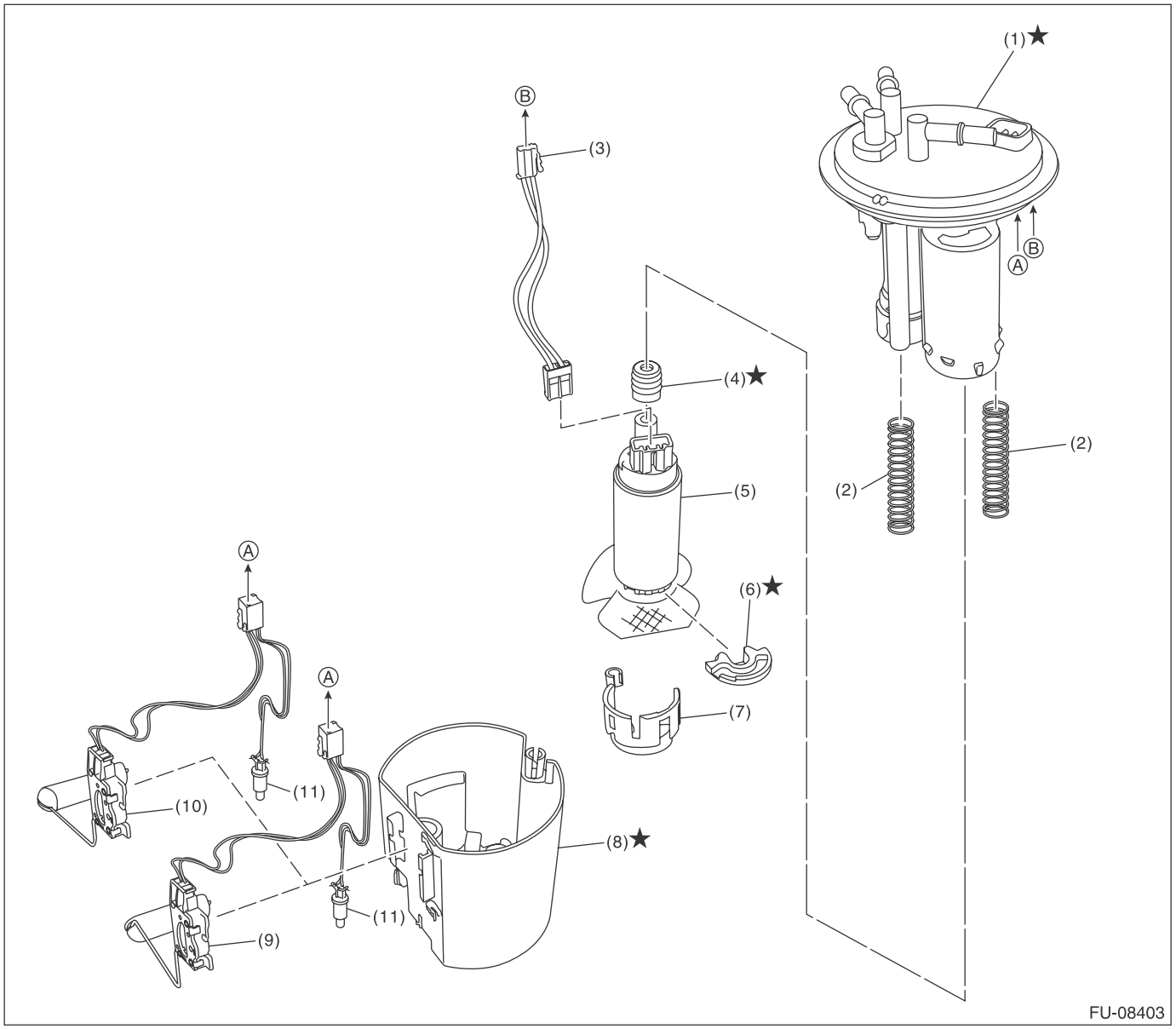

(1) Fuel filter assembly
(2) Pump module spring
(3) Fuel pump harness
(4) Gasket spacer
(5) Fuel pump
(6) Support rubber cushion
(7) Fuel pump holder
(8) Fuel chamber ASSY
(9) Fuel level sensor (model with fuel level sensor bent in 3 locations)
(10) Fuel level sensor (model with fuel level sensor bent in 2 locations)
(11) Fuel temperature sensor

C: CAUTION

• Wear appropriate work clothing, including a cap, protective goggles and protective shoes when performing any work.
• Remove contamination including dirt and corrosion before removal, installation or disassembly.
• Keep the disassembled parts in order and protect them from dust and dirt.
• Before removal, installation or disassembly, be sure to clarify the failure. Avoid unnecessary removal, installation, disassembly and replacement.
• Vehicle components are extremely hot after driving. Be wary of receiving burns from heated parts.
• Be sure to tighten fasteners including bolts and nuts to the specified torque.
• Place shop jacks or rigid racks at the specified points.
• Before disconnecting connectors of sensors or units, be sure to disconnect the ground cable from the battery.
• Place “NO OPEN FLAMES” signs near the working area.
• Prepare a container and cloth to prevent scattering of fuels when performing work where fuels can be spilled. If the fuel spills, wipe it off immediately to prevent from penetrating into floor or flowing out for environmental protection.
• Follow all government and local regulations concerning disposal of refuse when disposing fuel.

D: PREPARATION TOOL

1. SPECIAL TOOL

ILLUSTRATION	TOOL NUMBER	DESCRIPTION	REMARKS
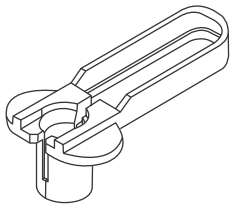 ST18371AA000	18371AA000	CONNECTOR REMOVER	Used for disconnecting the quick connector on the fuel return hose of the engine compartment (intake manifold).
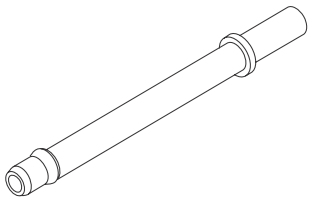 ST18471AA000	18471AA000	FUEL PIPE ADAPTER	Used for draining fuel.
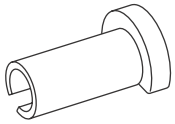 ST42099AE000	42099AE000	QUICK CONNECTOR RELEASE	Used for disconnecting quick connector of the engine compartment.
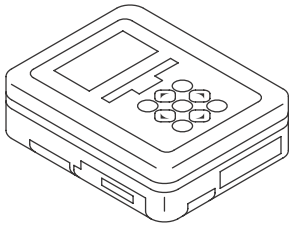 ST1B022XU0	1B022XU0	SUBARU SELECT MONITOR III KIT	Used for draining fuel and each inspection.

2. GENERAL TOOL

TOOL NAME	REMARKS
Circuit tester	Used for measuring resistance and voltage.
Oscilloscope	Used for inspecting the waveform of each sensor.
Sensor socket	Used for removing and installing the front oxygen (A/F) sensor and rear oxygen sensor.

2. Throttle Body

A: REMOVAL

1) Remove the collector cover.
2) Disconnect the ground cable from battery.

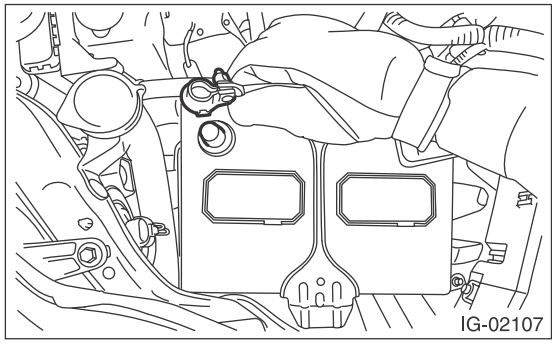

3) Lift up the vehicle.
4) Remove the under cover. <Ref. to EI-35, REMOVAL, Front Under Cover.>
5) Drain approximately 2.0 ℓ (2.1 US qt, 1.8 Imp qt) of engine coolant. <Ref. to CO(H4DOTC)-14, DRAINING OF ENGINE COOLANT, REPLACEMENT, Engine Coolant.>
6) Remove the intercooler. <Ref. to IN(H4DOTC)-17, REMOVAL, Intercooler.>
7) Remove the bolts which secure the engine harness and PCV pipe to the intake manifold, and remove the intake duct from the throttle body.

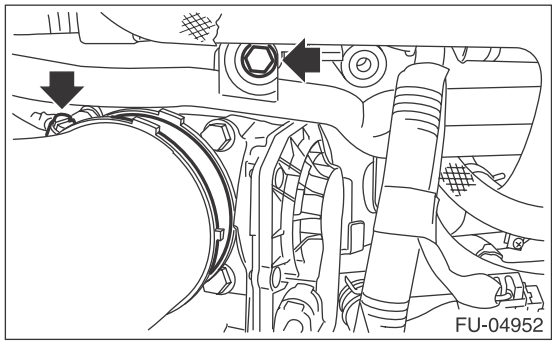

8) Disconnect the connectors and preheater hoses from the throttle position sensor.

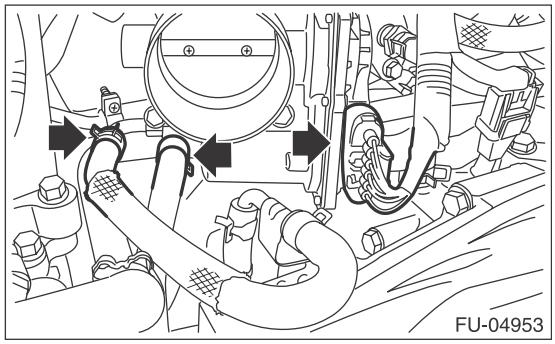

9) Remove the bolts which secure the throttle body to the intake manifold, and remove the throttle body.

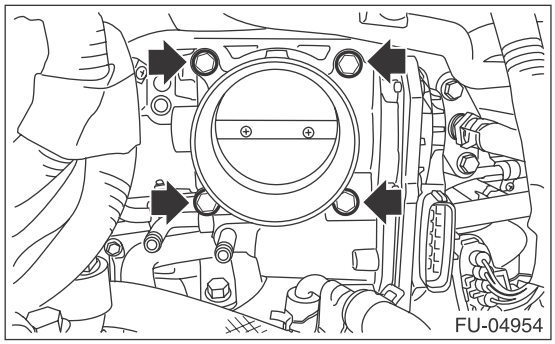

B: INSTALLATION

Install in the reverse order of removal.

NOTE:
- Use new O-rings.
- When installing the intake duct to the throttle body, align the protrusion (a) on the intake duct to the installation position mark (b) on the throttle body to install.

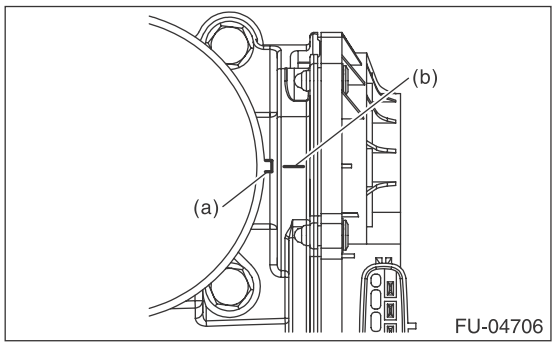

Tightening torque:
8 N·m (0.8 kgf-m, 5.9 ft-lb)

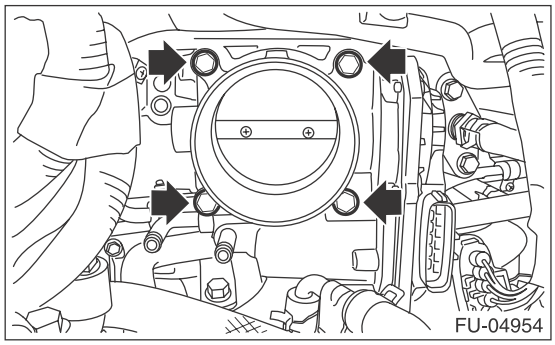

Tightening torque:
T1: 3 N·m (0.3 kgf-m, 2.2 ft-lb)
T2: 6.4 N·m (0.7 kgf-m, 4.7 ft-lb)

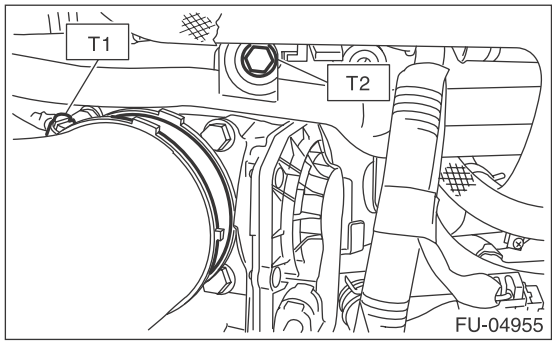

C: INSPECTION

1. THROTTLE SENSOR INSPECTION (METHOD WITH CIRCUIT TESTER)

1) Remove the glove box lid assembly. <Ref. to EI-65, REMOVAL, Glove Box.>
2) Turn the ignition switch to ON. (engine OFF)
3) Check the voltage between ECM connector terminals.

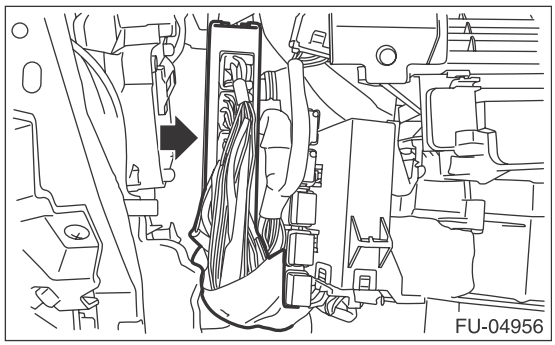

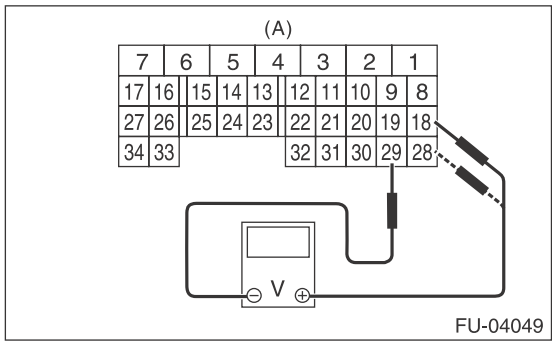

(A) To ECM connector

Throttle sensor	Accelerator pedal	Terminal No.	Standard
Main	Not depressed (Full closed)	18 (+) and 29 (–)	Approx. 0.6 V
	Depressed (Full opened)		Approx. 4.04 V
Sub	Not depressed (Full closed)	28 (+) and 29 (–)	Approx. 1.48 V
	Depressed (Full opened)		Approx. 4.23 V

2. THROTTLE SENSOR INSPECTION (METHOD WITH SUBARU SELECT MONITOR)

1) Turn the ignition switch to ON. (engine OFF)
2) Read the throttle opening angle signal and voltage of throttle sensor using Subaru Select Monitor. <Ref. to EN(H4DOTC)(diag)-37, READ CURRENT DATA FOR ENGINE (NORMAL MODE), OPERATION, Subaru Select Monitor.>

Throttle sensor	Throttle opening angle signal	Standard
Main	0.0 %	Approx. 0.6 V
	100.0 %	Approx. 4.04 V
Sub	0.0 %	Approx. 1.48 V
	100.0 %	Approx. 4.23 V

3. Intake Manifold

A: REMOVAL

1) Remove the collector cover.
2) Collect the refrigerant from A/C system. <Ref. to AC-18, PROCEDURE, Refrigerant Recovery Procedure.>
3) Release the fuel pressure. <Ref. to FU(H4DOTC)-65, RELEASING OF FUEL PRESSURE, PROCEDURE, Fuel.>
4) Disconnect the ground cable from battery.

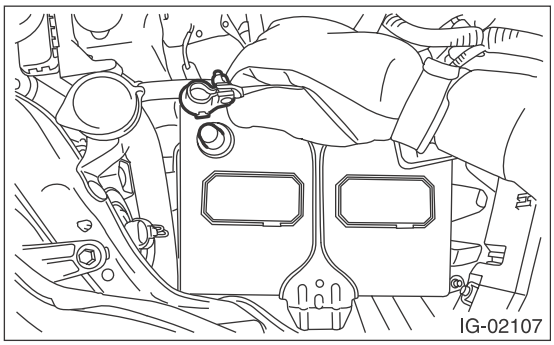

5) Open the fuel filler lid and remove the fuel filler cap.
6) Lift up the vehicle.
7) Remove the under cover. <Ref. to EI-35, REMOVAL, Front Under Cover.>
8) Drain approximately 2.0 ℓ (2.1 US qt, 1.8 Imp qt) of engine coolant. <Ref. to CO(H4DOTC)-14, DRAINING OF ENGINE COOLANT, REPLACEMENT, Engine Coolant.>
9) Disconnect the connectors from exhaust oil flow control solenoid valve (A) and exhaust camshaft position sensor (B).

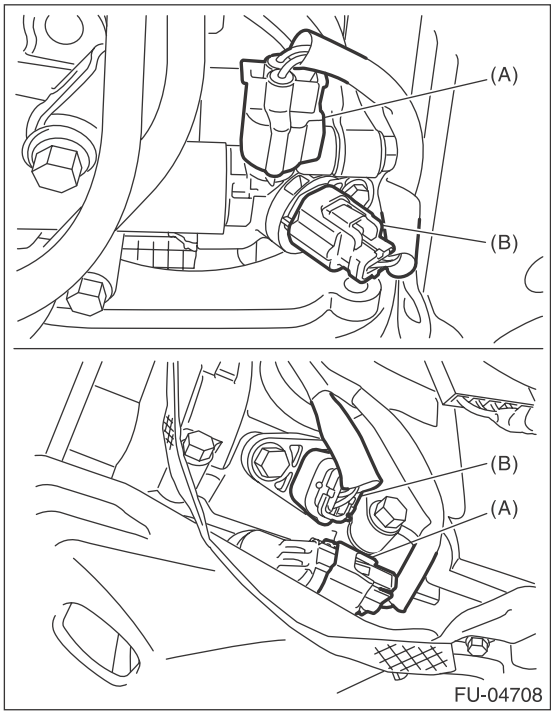

10) Disconnect the connectors from wastegate control solenoid valve, and remove the clip (A) which secure the engine harness.

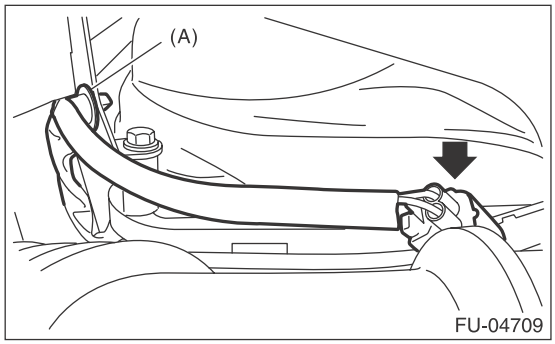

11) Lower the vehicle.
12) Remove the air intake duct. <Ref. to IN(H4DOTC)-12, REMOVAL, Air Intake Duct.>
13) Remove the intercooler. <Ref. to IN(H4DOTC)-17, REMOVAL, Intercooler.>
14) Disconnect the A/C pressure hoses from A/C compressor. <Ref. to AC-65, REMOVAL, Hose and Pipe.>
15) Disconnect the vacuum control hose from the PCV valve.

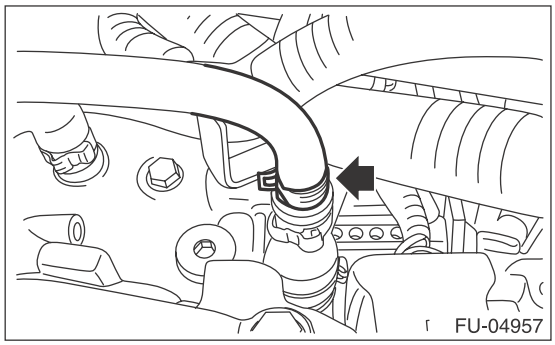

16) Remove the bolts which secure the engine harness and PCV pipe to the intake manifold, and remove the intake duct from the throttle body.

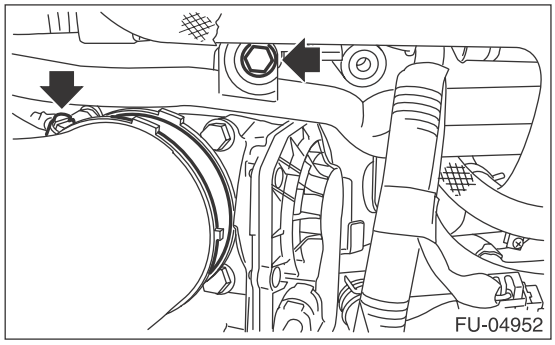

17) Disconnect the preheater hose from throttle body.

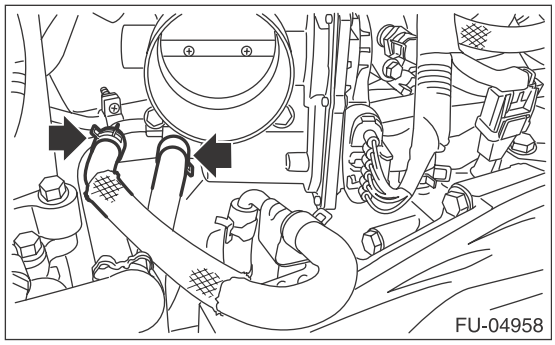

18) Disconnect the brake booster vacuum hose.

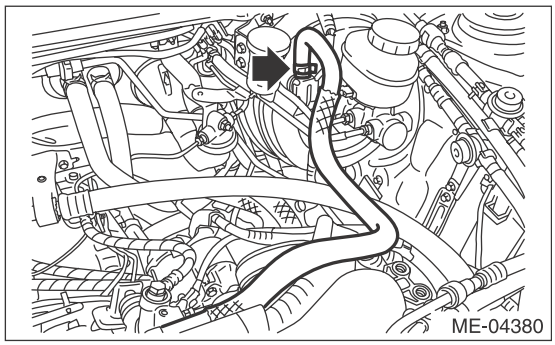

19) Disconnect the vacuum hose from rocker cover.

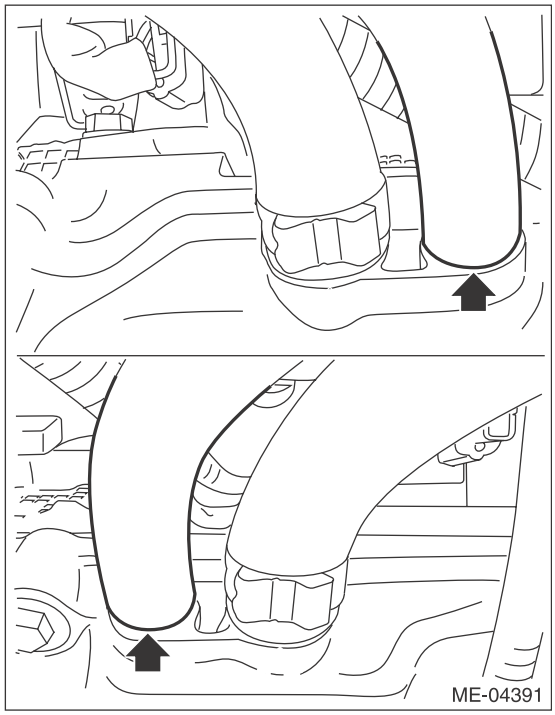

20) Disconnect the vacuum hose from blow-by pipe, and remove the bolt securing the blow-by pipe to the intake manifold protector RH.

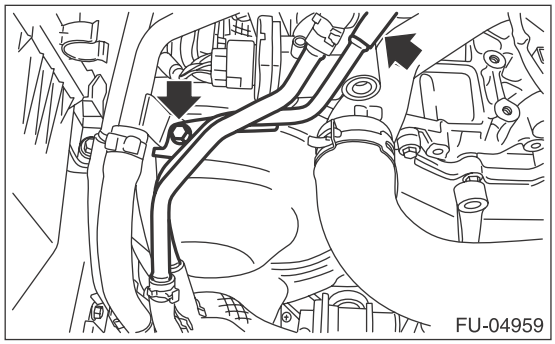

21) Disconnect vacuum hose (A) and vacuum control hose (B) from the PCV pipe.
22) Remove the nut securing the PCV pipe to the intake manifold protector RH, and move the PCV pipe in the forward direction of the vehicle.

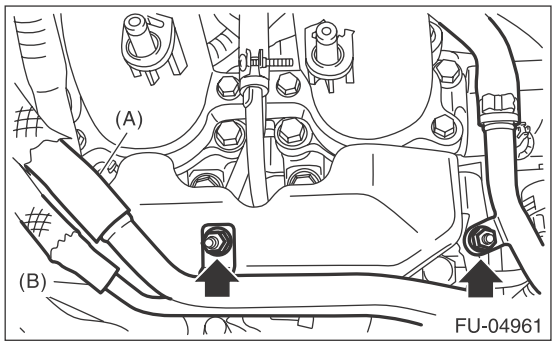

23) Disconnect the bulkhead harness connector from the engine harness connector (brown).

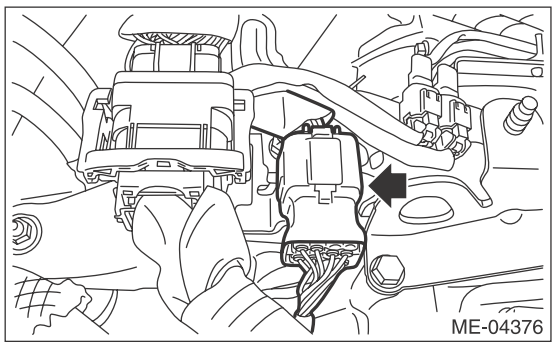

24) Remove the bolt securing the bulkhead harness connector bracket, and disconnect the bulkhead harness connector from the engine harness connector (black).

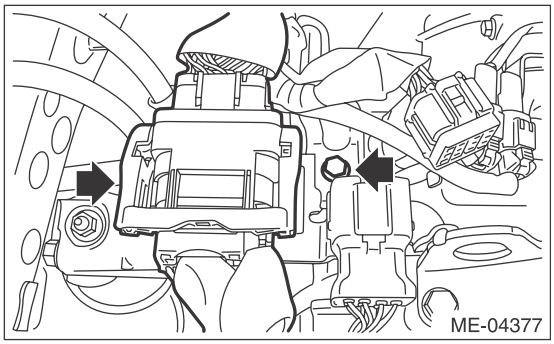

25) Remove the engine harness connector from the engine rear hanger.

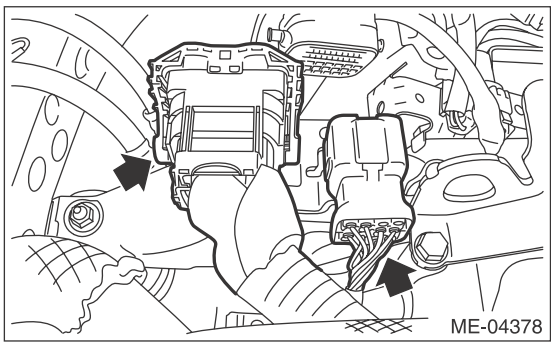

26) Disconnect the connectors from the engine coolant temperature sensor (A), oil pressure switch (B) and crankshaft position sensor (C).

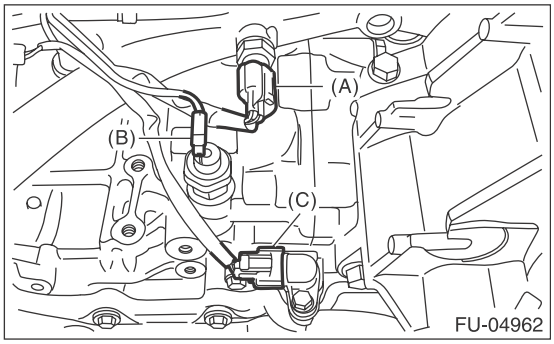

27) Disconnect the connectors from front oxygen (A/F) sensor (A) and rear oxygen sensor (B).

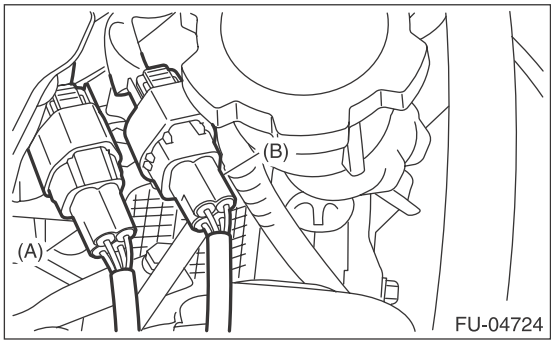

28) Remove the clip which secure the generator cord to the intake manifold protector LH.

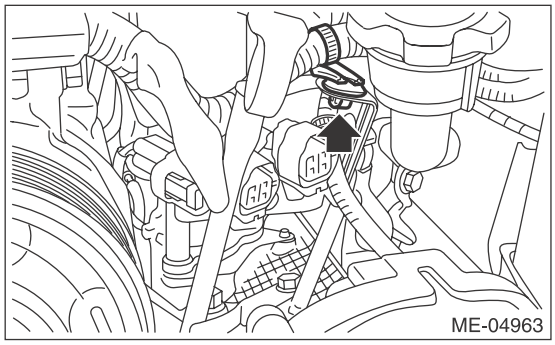

29) Disconnect the connector from the knock sensor.

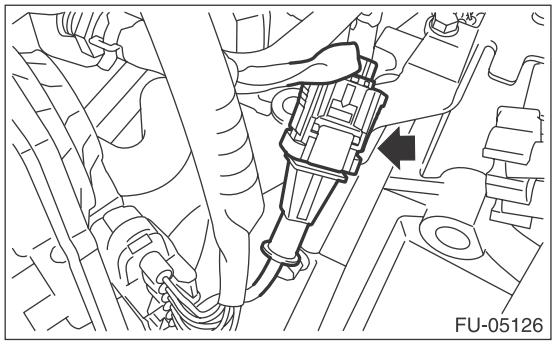

30) Disconnect the connector from the intake camshaft position sensor.

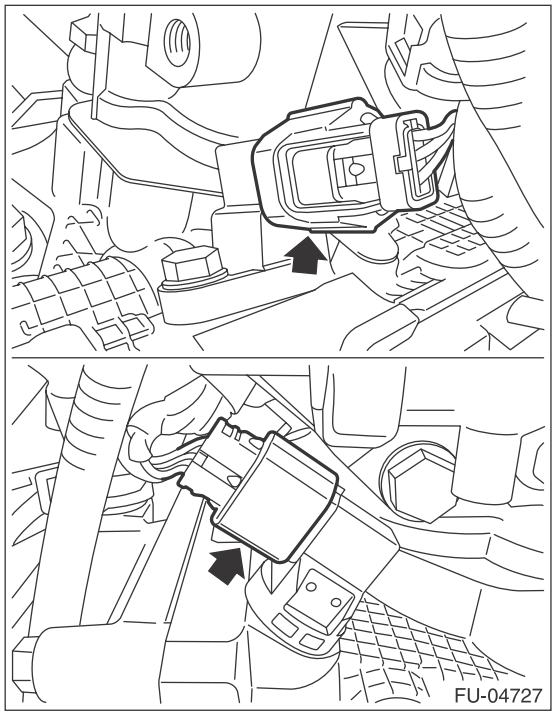

31) Disconnect the connectors from the intake oil flow control solenoid valve.

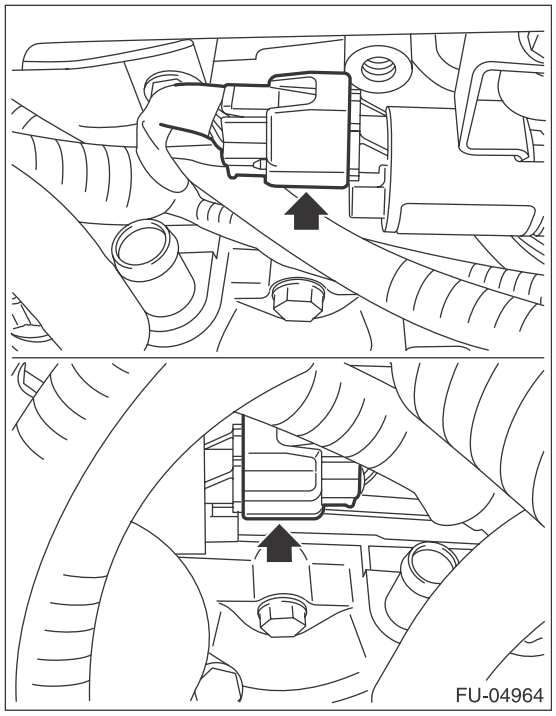

32) Disconnect the connector (A) from oil level switch.

33) Disconnect the connector (B) from ignition coil, and remove the clips (C) and bolt (D) securing the engine harness or oil level switch harness to the rocker cover.

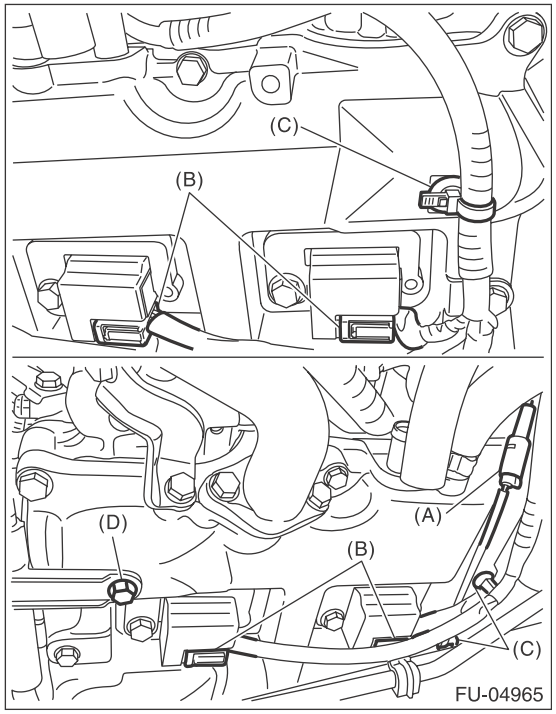

34) Attach ST to the fuel delivery pipe and push ST in the direction of arrow mark to disconnect the fuel delivery hose.

ST 42099AE000 QUICK CONNECTOR RELEASE

CAUTION:
- **Be careful not to spill fuel.**
- **Catch the fuel from hoses using a container or cloth.**

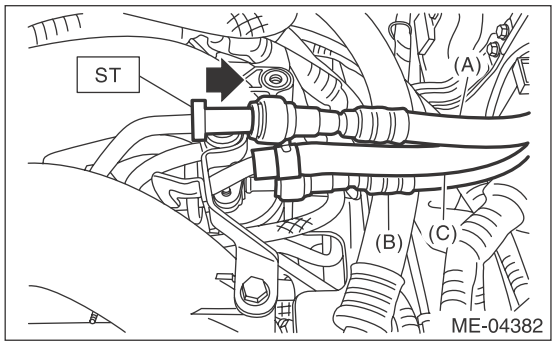

(A) Fuel delivery hose
(B) Fuel return hose
(C) Evaporation hose

35) Disconnect the fuel return hose using the ST.

ST 18371AA000 CONNECTOR REMOVER

CAUTION:
- **Be careful not to spill fuel.**
- **Catch the fuel from hoses using a container or cloth.**

(1) Attach ST to the fuel return pipe as shown in the figure.

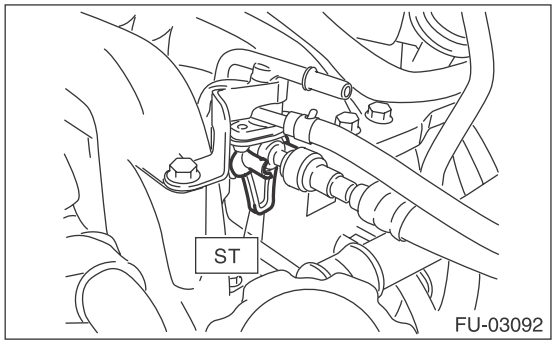

(2) Insert the front side of ST into the quick connector.

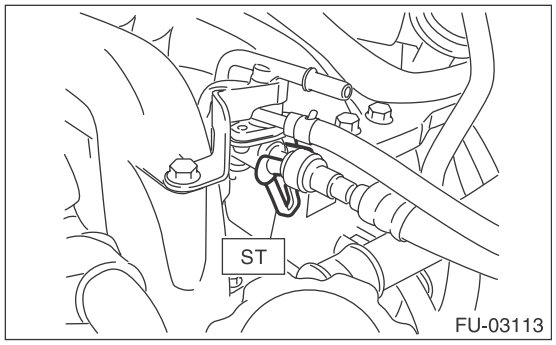

(3) Insert the back side of ST into the quick connector and push ST in the direction of arrow mark to disconnect the fuel return hose.

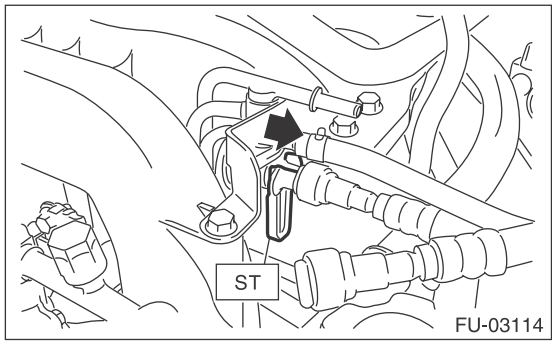

36) Remove the clip and disconnect the evaporation hose from the fuel pipe.

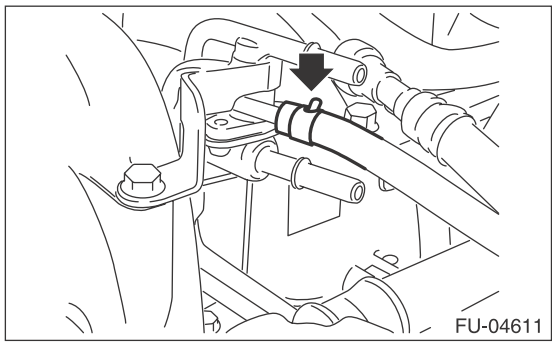

37) Remove the intake manifold from cylinder head.

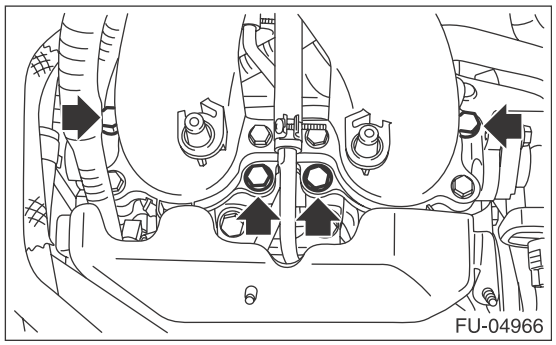

B: INSTALLATION

1) Install the intake manifold onto cylinder heads.

NOTE:
Use a new gasket.

Tightening torque:
25 N·m (2.5 kgf-m, 18.4 ft-lb)

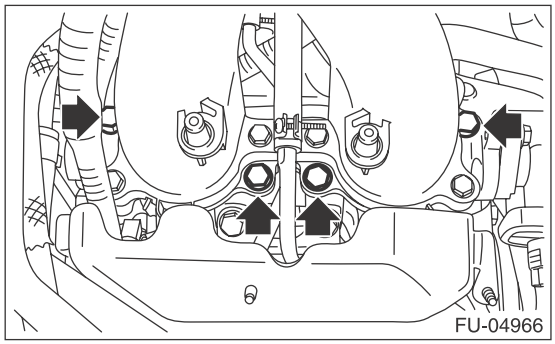

2) Connect the fuel delivery hose, fuel return hose, and evaporation hose.

NOTE:
If fuel hoses or clamps are damaged, replace them with new parts.

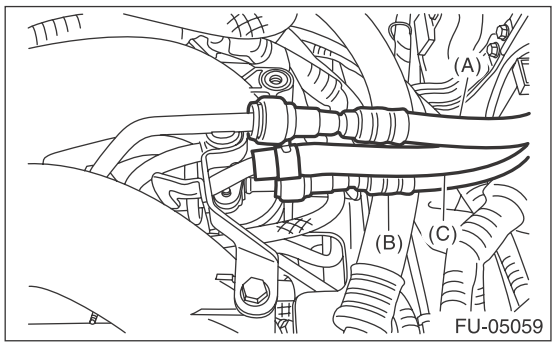

(A) Fuel delivery hose
(B) Fuel return hose
(C) Evaporation hose

3) Connect the connector (A) from oil level switch.
4) Connect the connector (B) to ignition coil, and secure the engine harness or oil level switch harness to the rocker cover with clips (C) and bolt (D).

Tightening torque:
6.4 N·m (0.7 kgf-m, 4.7 ft-lb)

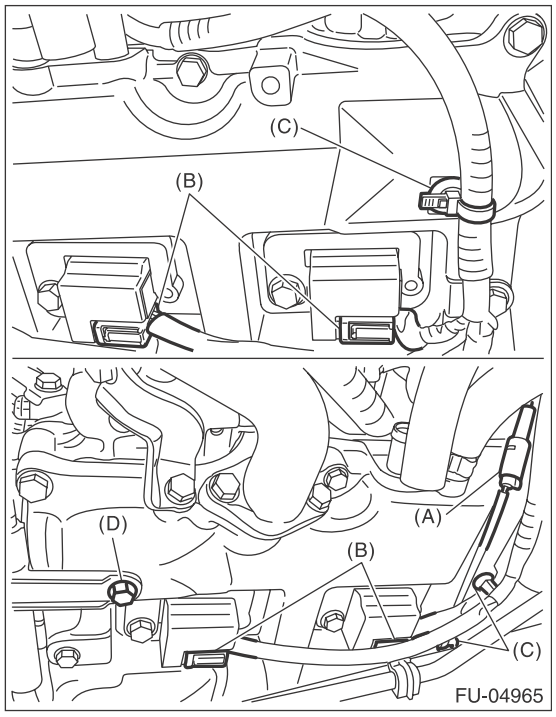

5) Connect the connectors to the intake oil flow control solenoid valve.

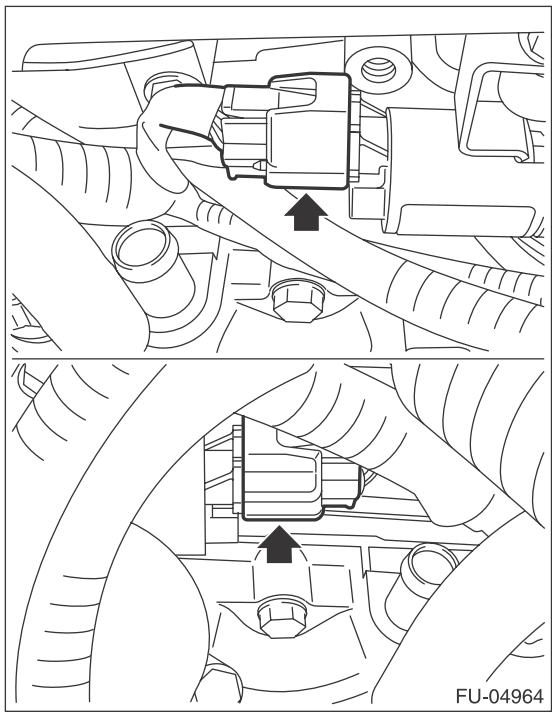

6) Connect the connectors to the intake camshaft position sensor.

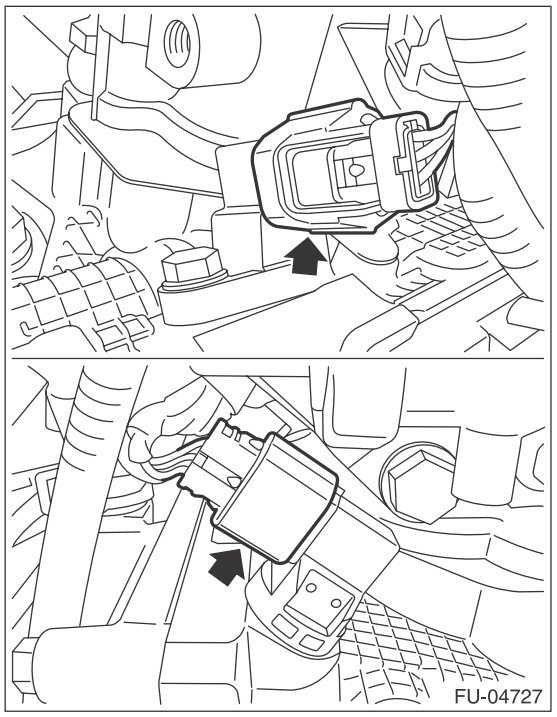

7) Connect the connector to the knock sensor.

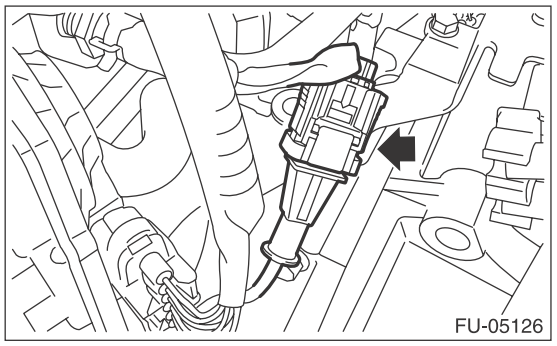

8) Secure the generator cord to the intake manifold protector LH with a clip.

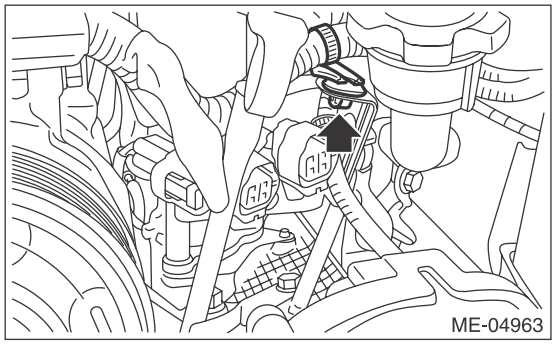

9) Connect the connectors to front oxygen (A/F) sensor (A) and rear oxygen sensor (B).

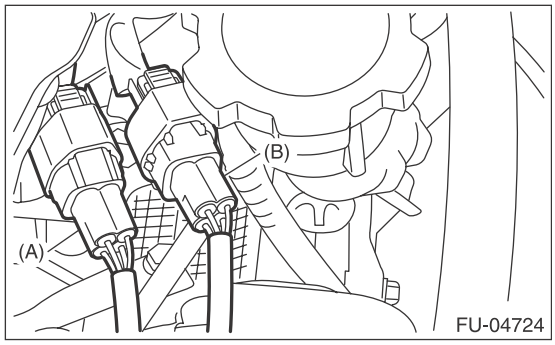

10) Connect the connector to the engine coolant temperature sensor (A), oil pressure switch (B) and crankshaft position sensor (C).

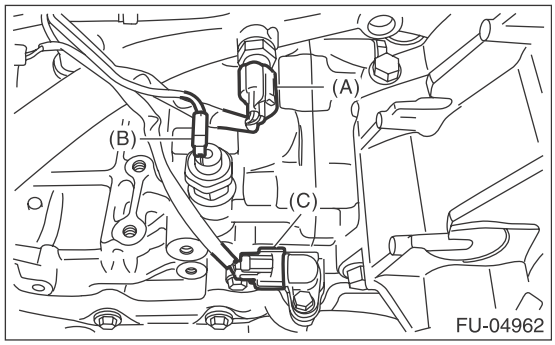

11) Install the engine harness connector to the engine rear hanger.

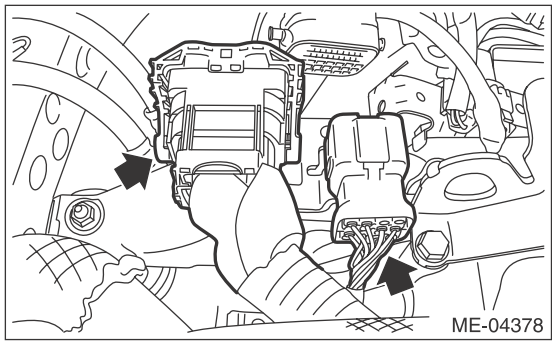

12) Connect the bulkhead harness connector to the engine harness connector (black), and install the bolt securing the bulkhead harness connector bracket.

Tightening torque:
6.4 N·m (0.7 kgf-m, 4.7 ft-lb)

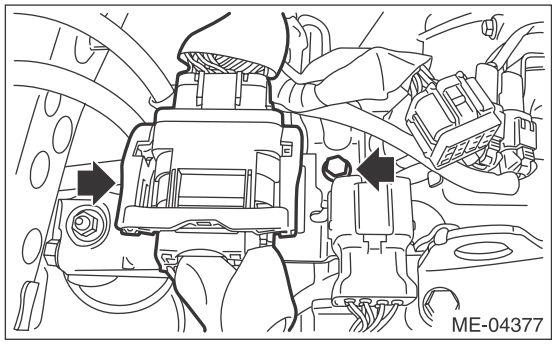

13) Connect the bulkhead harness connector to the engine harness connector (brown).

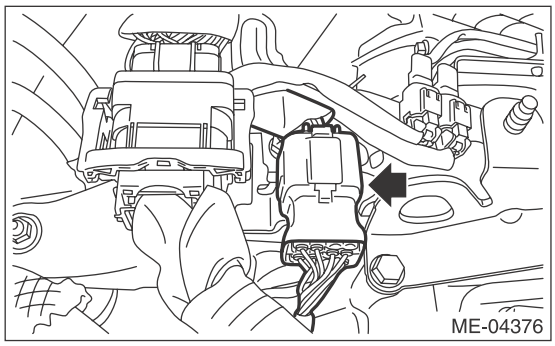

14) Install the nuts securing the PCV pipe to the intake manifold protector RH, and connect the vacuum hose (A) and vacuum control hose (B) to the PCV pipe.

Tightening torque:
6.4 N·m (0.7 kgf-m, 4.7 ft-lb)

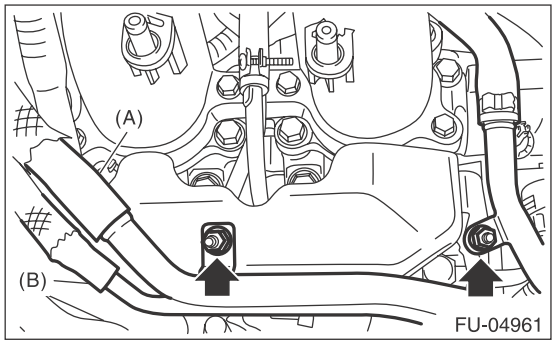

15) Install the blow-by pipe to the intake manifold protector RH, and connect vacuum hose to the blow-by pipe.

Tightening torque:
6.4 N·m (0.7 kgf-m, 4.7 ft-lb)

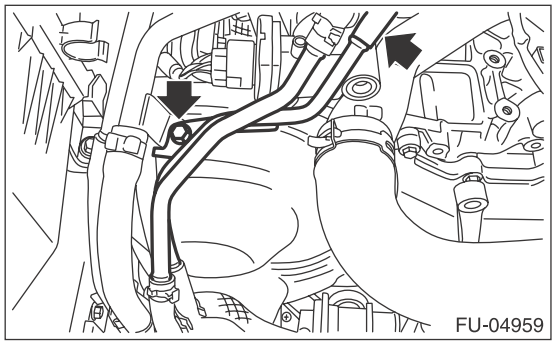

16) Connect the vacuum hose to the rocker cover.

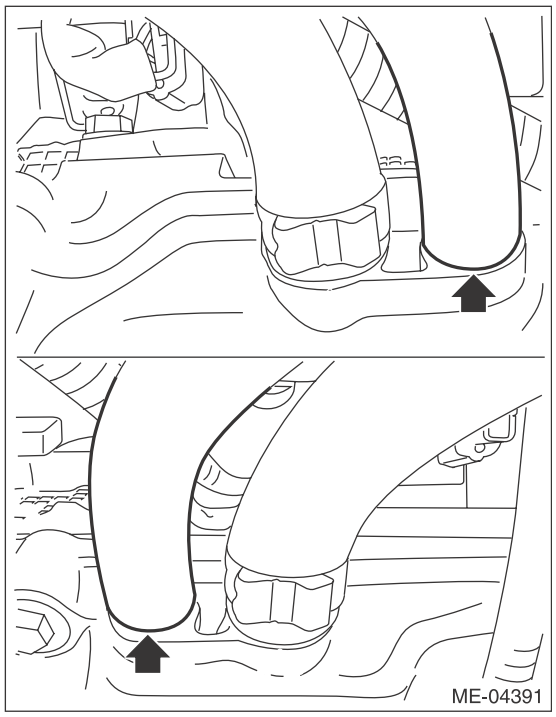

17) Connect the brake booster vacuum hose.

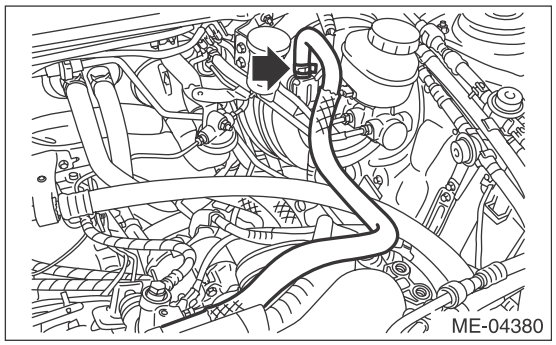

18) Connect the preheater hoses to the throttle body.

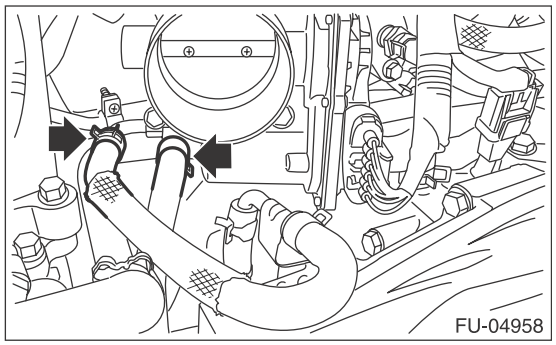

19) Install the intake duct to the throttle body, and install the bolts which secure the engine harness and PCV pipe to the intake manifold.

NOTE:
When installing the intake duct to the throttle body, align the protrusion (a) on the intake duct to the installation position mark (b) on the throttle body to install.

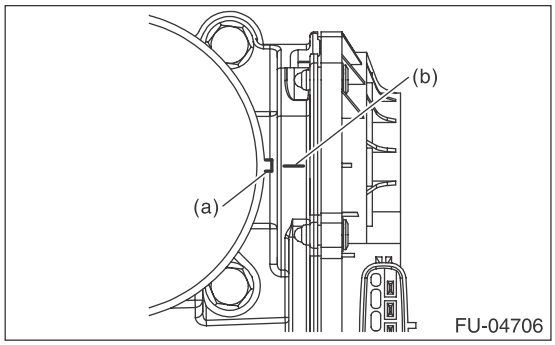

Tightening torque:
T1: 3 N·m (0.3 kgf-m, 2.2 ft-lb)
T2: 6.4 N·m (0.7 kgf-m, 4.7 ft-lb)

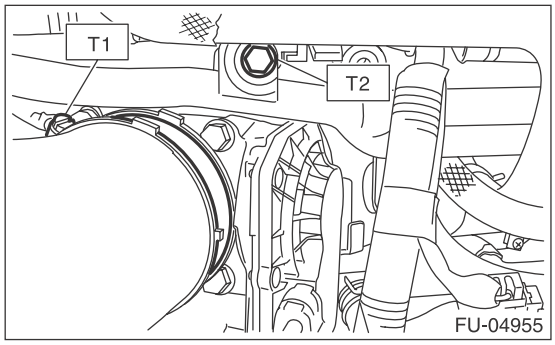

20) Connect the vacuum control hose to the PCV valve.

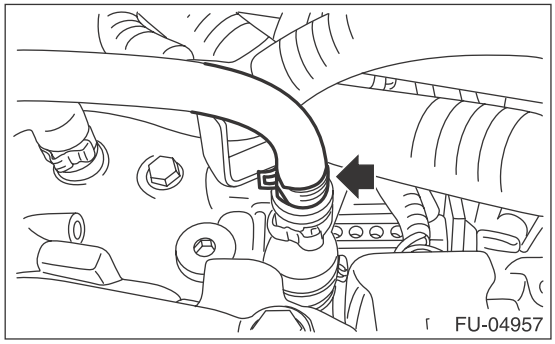

21) Install the A/C pressure hoses to A/C compressor. <Ref. to AC-65, INSTALLATION, Hose and Pipe.>
22) Install the intercooler. <Ref. to IN(H4DOTC)-18, INSTALLATION, Intercooler.>
23) Install the air intake duct. <Ref. to IN(H4DOTC)-12, INSTALLATION, Air Intake Duct.>
24) Lift up the vehicle.

25) Connect the connectors to the wastegate control solenoid valve, and secure the engine harness with clip (A).

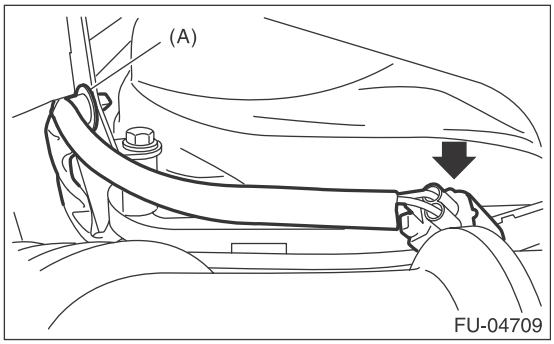

26) Connect the connectors to exhaust oil flow control solenoid valve (A) and exhaust camshaft position sensor (B).

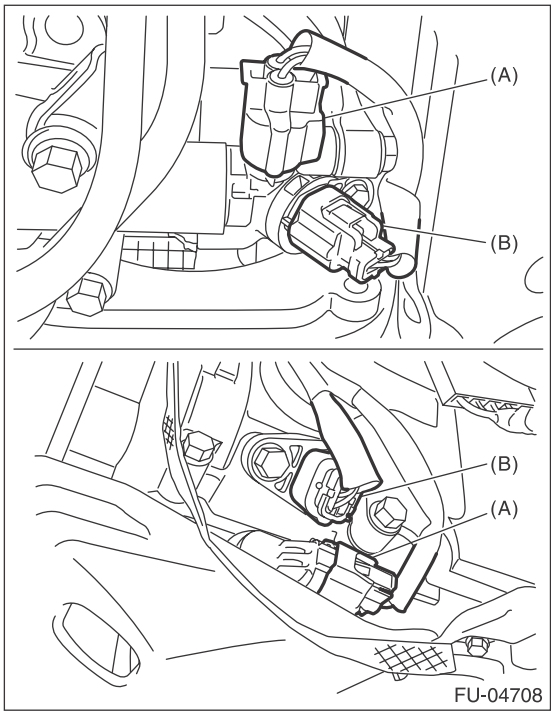

27) Install the under cover. <Ref. to EI-35, INSTALLATION, Front Under Cover.>
28) Lower the vehicle.
29) Connect the ground cable to battery.

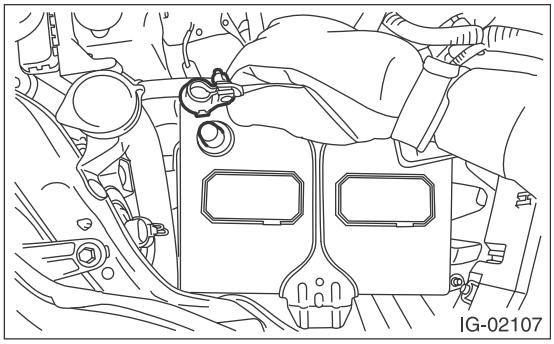

30) Fill engine coolant. <Ref. to CO(H4DOTC)-14, FILLING OF ENGINE COOLANT, REPLACEMENT, Engine Coolant.>
31) Charge the A/C system with refrigerant. <Ref. to AC-19, PROCEDURE, Refrigerant Charging Procedure.>
32) Install the collector cover.

C: DISASSEMBLY

1) Remove the intake manifold protector RH from intake manifold.

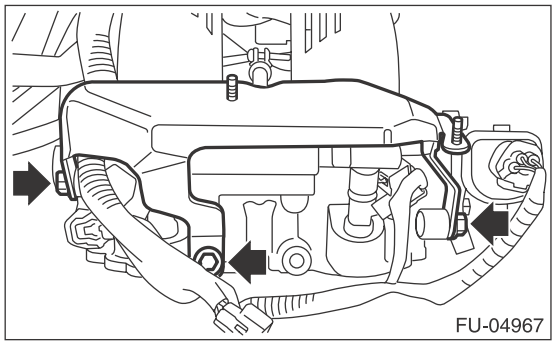

2) Disconnect front oxygen (A/F) sensor connector (A) and rear oxygen sensor connector (B) from the intake manifold protector LH, and also remove clip (C) which holds the engine harness.

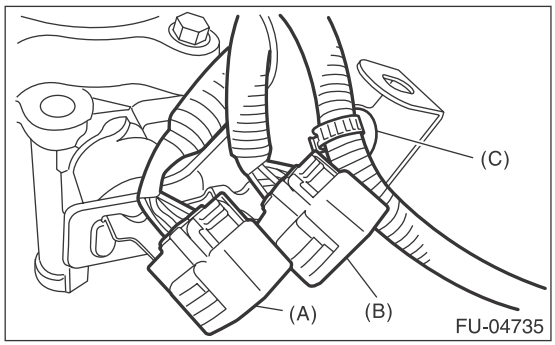

3) Remove the engine ground terminal from the intake manifold protector LH, and remove the intake manifold protector LH from the intake manifold.

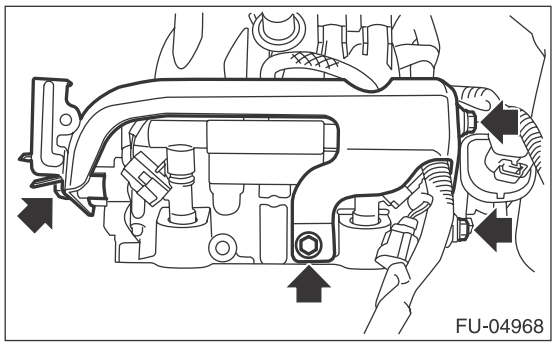

4) Remove the filter assembly.

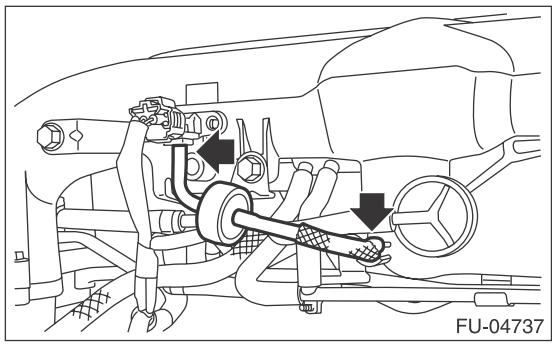

5) Disconnect the vacuum hose from the intake manifold and fuel delivery pipe.

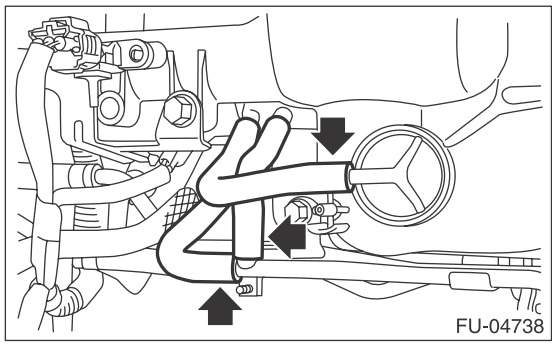

6) Disconnect the connector from the manifold absolute pressure sensor, and remove the solenoid valve bracket assembly from the intake manifold.

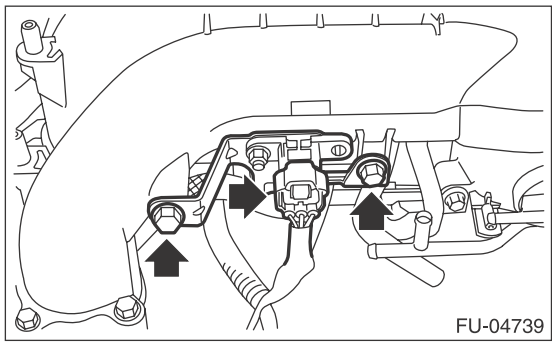

7) Disconnect the connectors from the purge control solenoid valves 1 and 2.

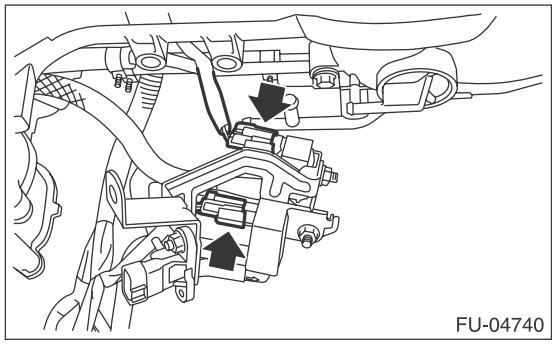

8) Disconnect the connectors from the throttle position sensor.

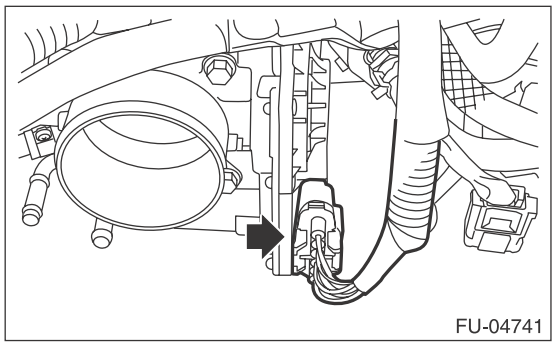

9) Remove the throttle body from the intake manifold.

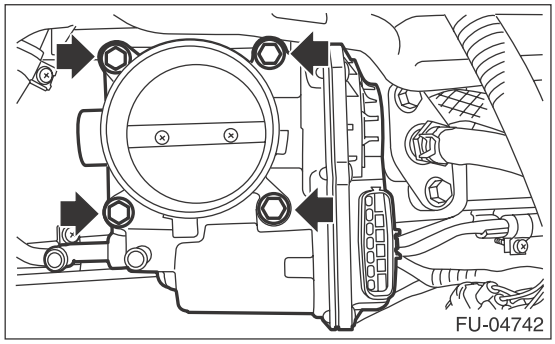

10) Disconnect the connector from the fuel injector and tumble generator valve assembly.

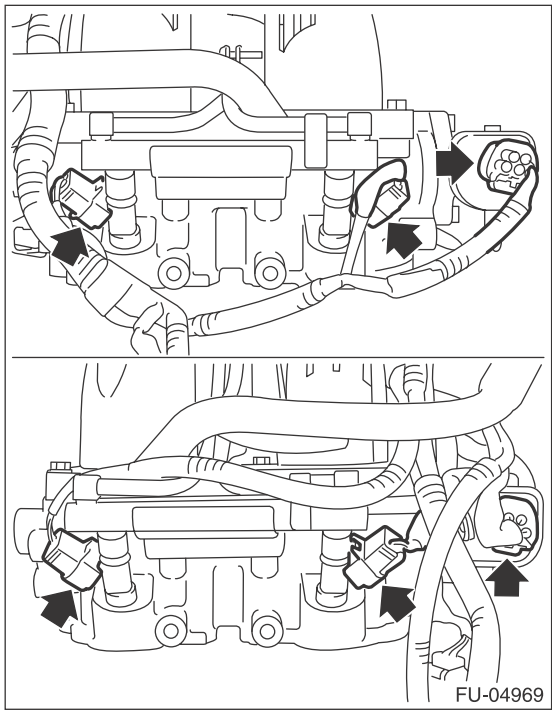

11) Remove the brake booster vacuum hose from the clip (A), and remove PCV pipe (B) and engine harness (C) from the intake manifold.

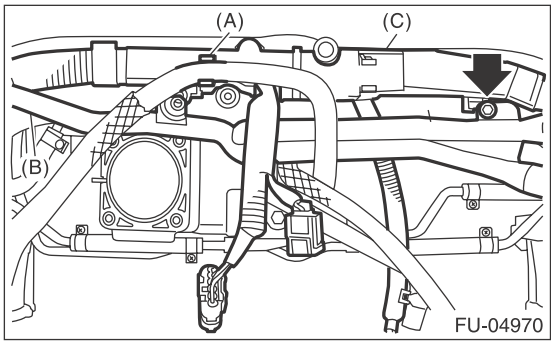

12) Remove the bolts which secure the fuel delivery pipe assembly to the intake manifold, and disconnect the pressure regulator vacuum hose from the intake manifold.

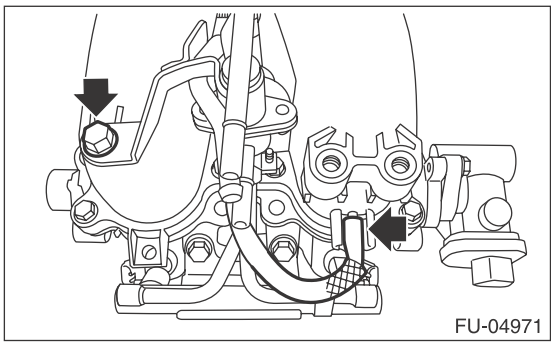

13) Remove the bolt which secures the fuel pipe to the intake manifold.

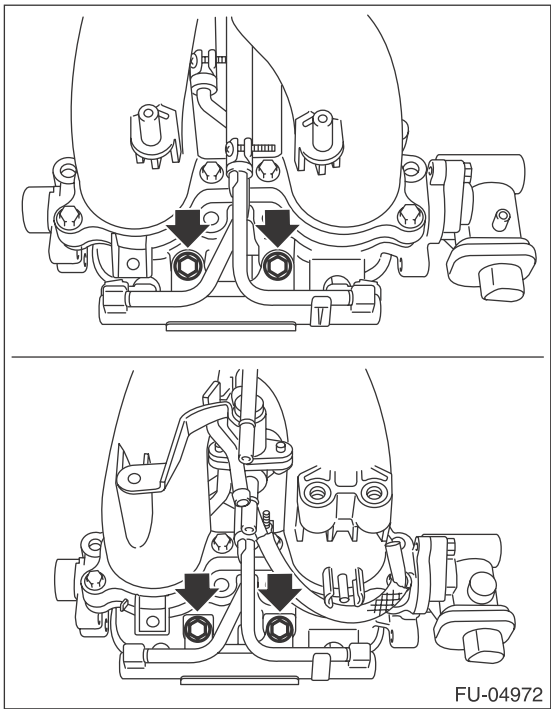

14) Remove the fuel injector.

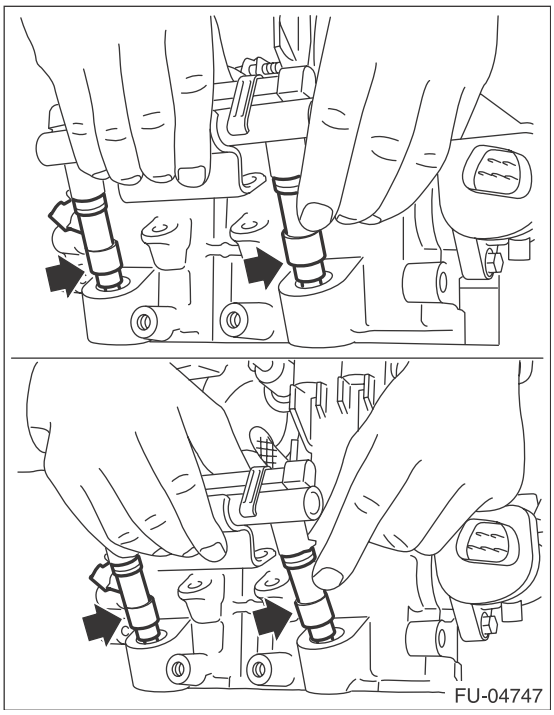

15) Disconnect vacuum hose (A), vacuum control hose (B) and brake booster vacuum hose (C) from the intake manifold.

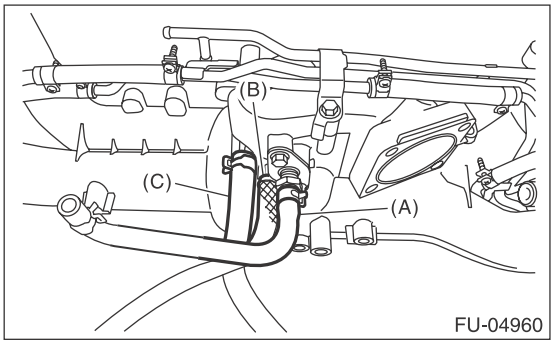

16) Remove the bolts which secure the fuel delivery pipe to the intake manifold, loosen the clamps which hold the fuel hose to the fuel delivery pipe, and remove the fuel delivery pipe and fuel pipe.

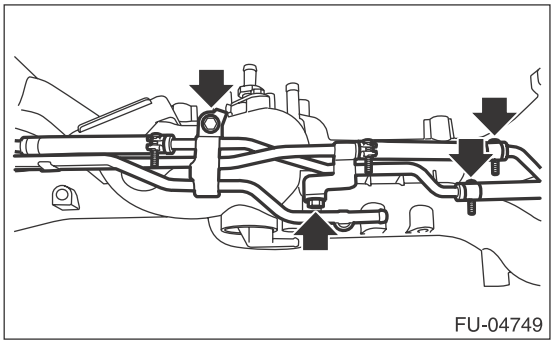

17) Remove the nipple from the intake manifold.

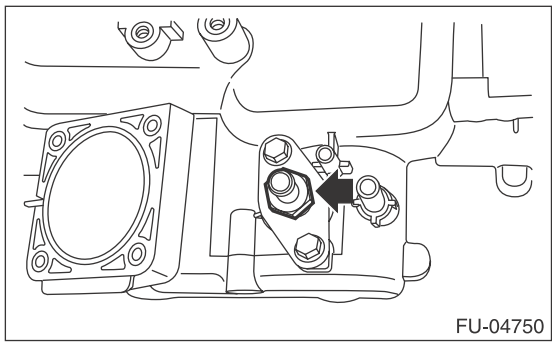

18) Remove the tumble generator valve assembly from the intake manifold.

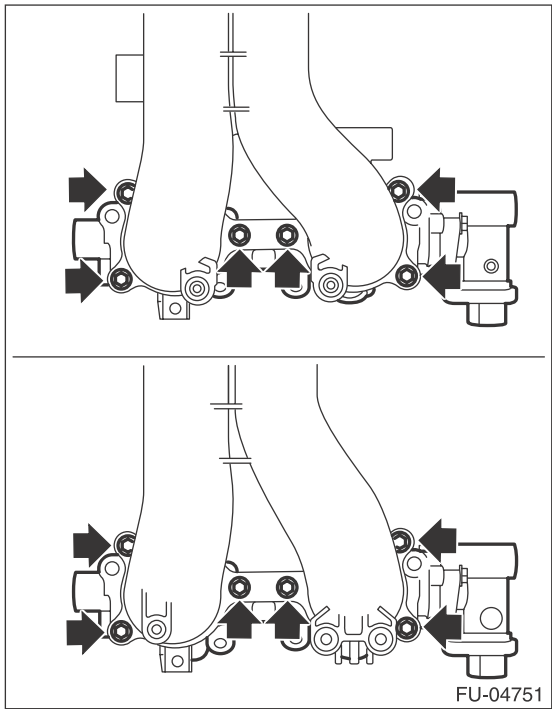

D: ASSEMBLY

1) Install the tumble generator valve assembly onto intake manifold.

NOTE:
Use new O-rings.

Tightening torque:
8.3 N·m (0.8 kgf-m, 6.1 ft-lb)

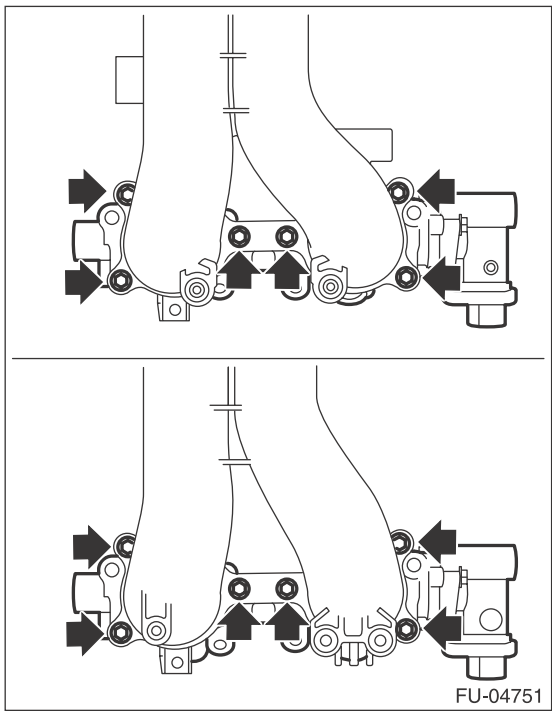

2) Apply liquid gasket to the nipple threads, and install the nipple to the intake manifold.

Liquid gasket:
THREE BOND 1105 (Part No. 004403010) or equivalent

Tightening torque:
23 N·m (2.3 kgf-m, 17.0 ft-lb)

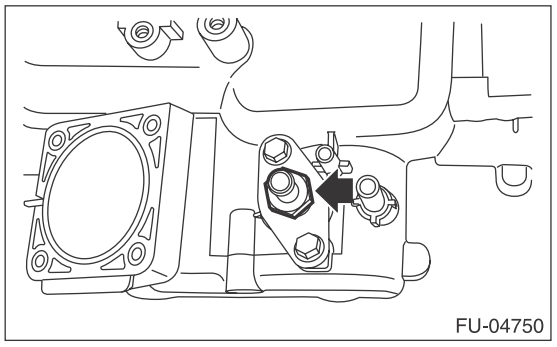

3) Set the fuel delivery pipe and fuel pipe, tighten the clamps which hold the fuel hose to the fuel delivery pipe, and install the fuel delivery pipe to the intake manifold.

Tightening torque:
T1: 1.25 N·m (0.1 kgf-m, 0.9 ft-lb)
T2: 6.4 N·m (0.7 kgf-m, 4.7 ft-lb)

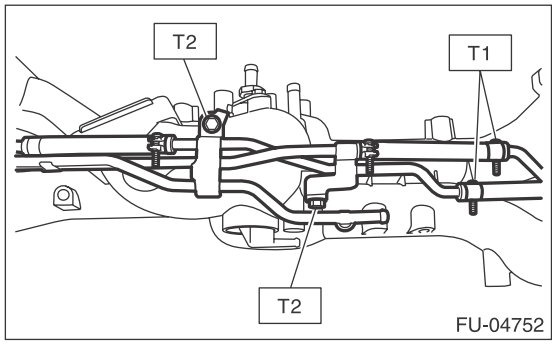

4) Connect vacuum hose (A), vacuum control hose (B) and brake booster vacuum hose (C) to the intake manifold.

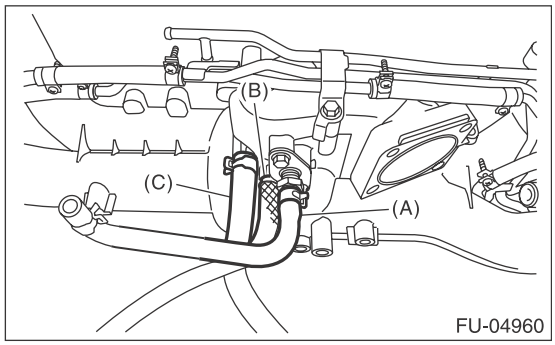

5) Install the fuel injector.

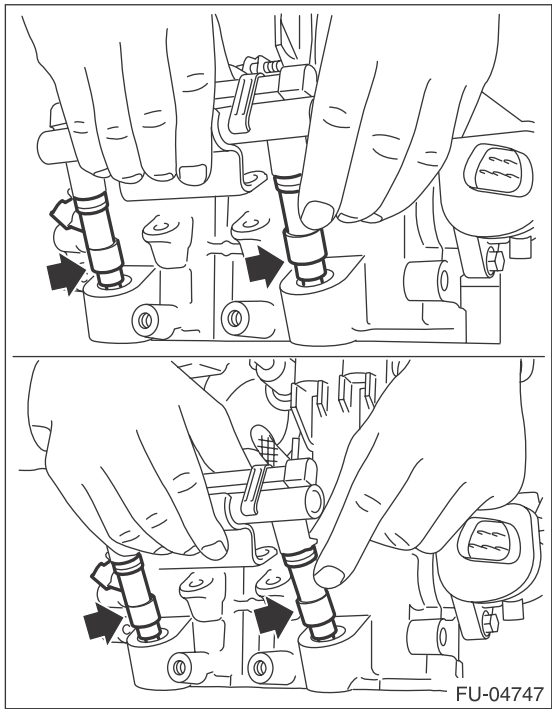

6) Install the bolts which secure fuel pipe to the intake manifold.

Tightening torque:
19 N·m (1.9 kgf-m, 14.0 ft-lb)

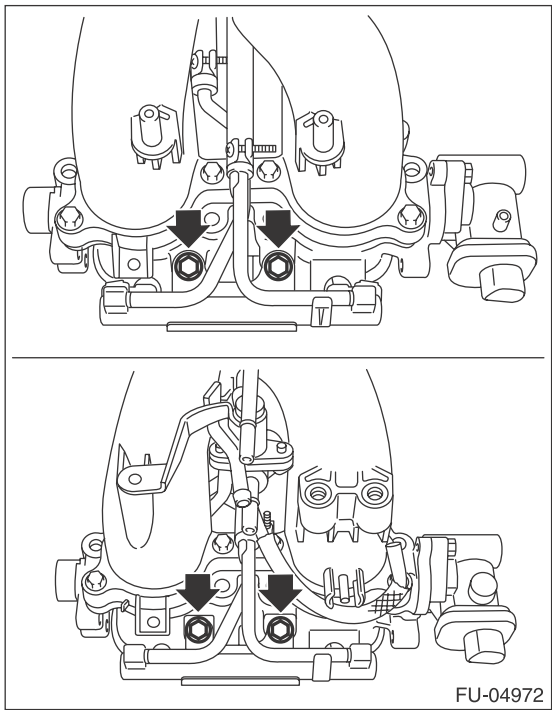

7) Install the bolts which secure fuel delivery pipe to the intake manifold, and connect the pressure regulator vacuum hose to the intake manifold.

Tightening torque:
6.4 N·m (0.7 kgf-m, 4.7 ft-lb)

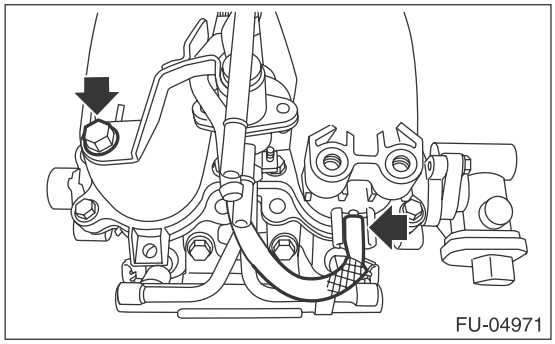

8) Install PCV pipe (B) and engine harness (C) to the intake manifold, and install the brake booster vacuum hose to the clip (A).

Tightening torque:
6.4 N·m (0.7 kgf-m, 4.7 ft-lb)

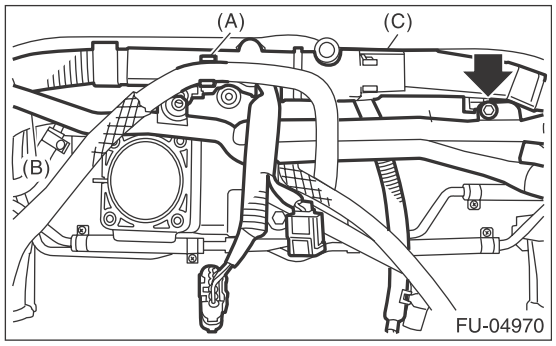

9) Connect the connector to the fuel injector and the tumble generator valve assembly.

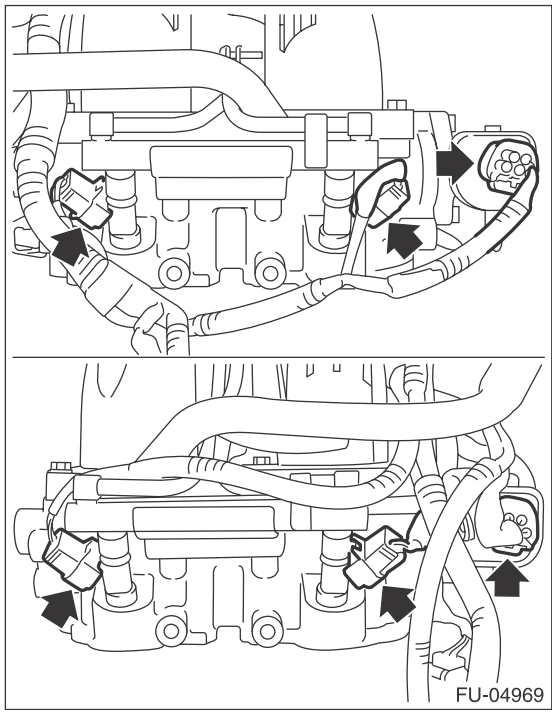

10) Install the throttle body to the intake manifold.

NOTE:
Use new O-rings.

Tightening torque:
8 N·m (0.8 kgf-m, 5.9 ft-lb)

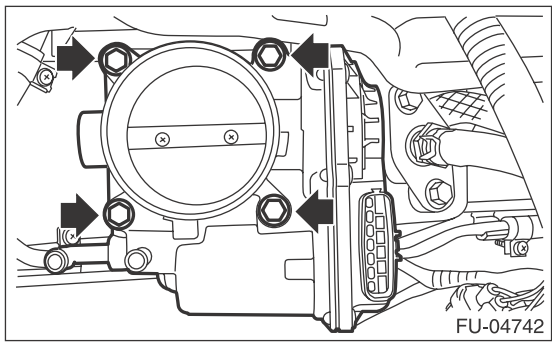

11) Connect the connector to the throttle position sensor.

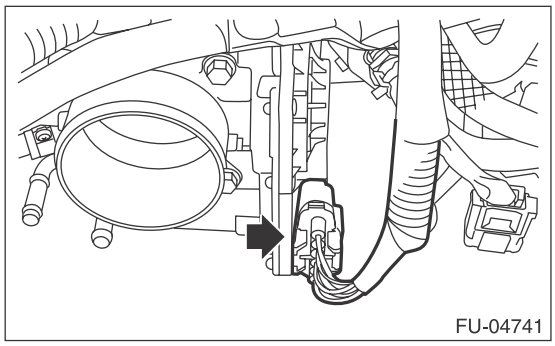

12) Connect the connectors to the purge control solenoid valves 1 and 2.

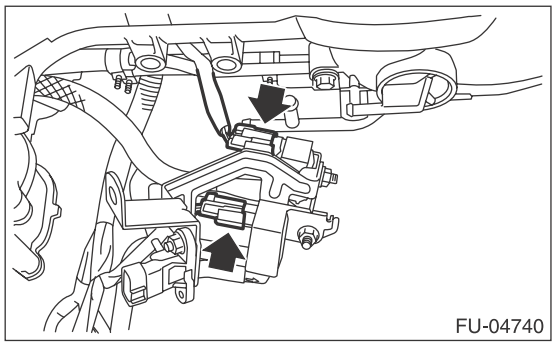

13) Install the solenoid valve bracket assembly to the intake manifold, and connect the connector to the manifold absolute pressure sensor.

Tightening torque:
19 N·m (1.9 kgf-m, 14.0 ft-lb)

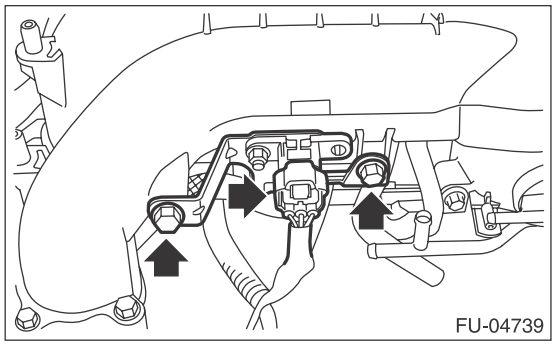

14) Connect the vacuum hose to the intake manifold and fuel delivery pipe.

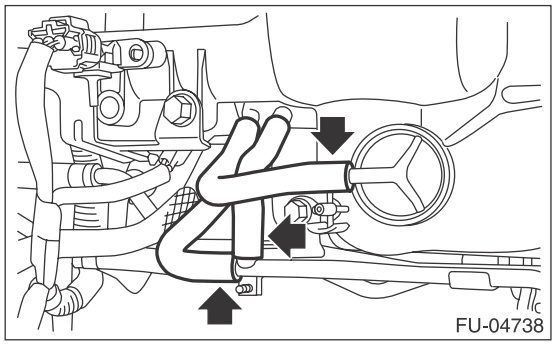

15) Install the filter assembly.

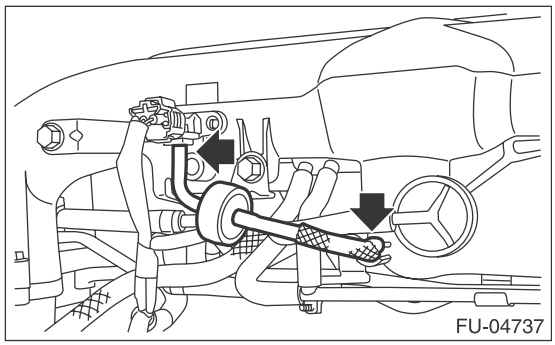

16) Install the intake manifold protector LH to the intake manifold, and install the engine ground terminal to the intake manifold protector.

NOTE:
Route the from front oxygen (A/F) sensor connector and rear oxygen sensor connector inside the intake manifold protector, as shown in the figure.

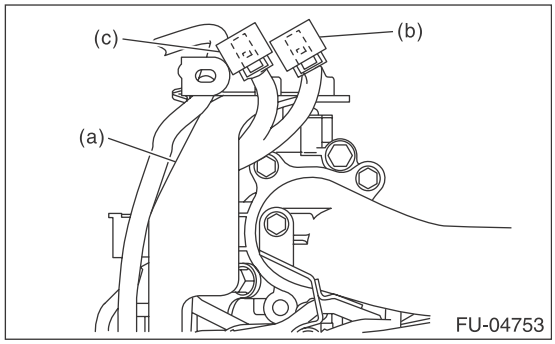

(a) Intake manifold protector
(b) Front oxygen (A/F) sensor connector
(c) Rear oxygen sensor connector

Tightening torque:
19 N·m (1.9 kgf-m, 14.0 ft-lb)

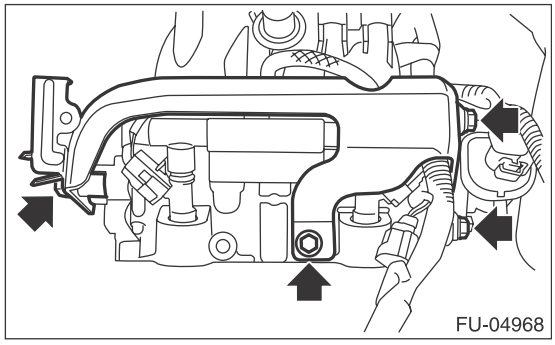

17) Install front oxygen (A/F) sensor connector (A) and rear oxygen sensor connector (B) to the intake manifold protector LH, and also install clip (C) which holds the engine harness.

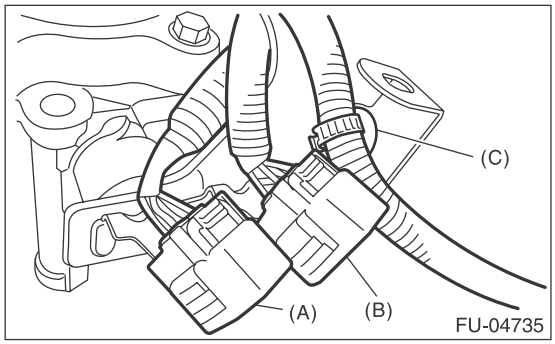

18) Install the intake manifold protector RH to the intake manifold.

Tightening torque:
19 N·m (1.9 kgf-m, 14.0 ft-lb)

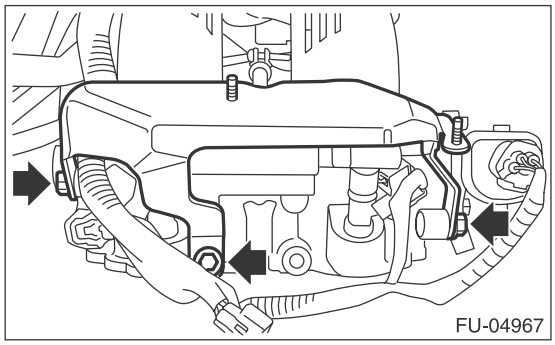

E: INSPECTION

1) Check that the intake manifold and fuel pipe have no deformation, cracks and other damages.
2) Check that the hose has no cracks, damage or loose part.

4. Engine Coolant Temperature Sensor

A: REMOVAL

1) Remove the collector cover.
2) Disconnect the ground cable from battery.

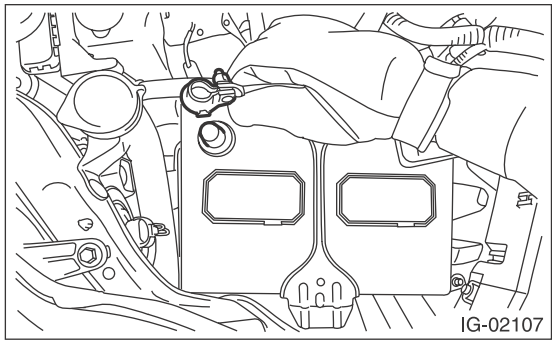

3) Remove the generator. <Ref. to SC(H4SO)-18, REMOVAL, Generator.>
4) Drain engine coolant. <Ref. to CO(H4DOTC)-14, DRAINING OF ENGINE COOLANT, REPLACEMENT, Engine Coolant.>
5) Disconnect the connector from the engine coolant temperature sensor, and remove the engine coolant temperature sensor.

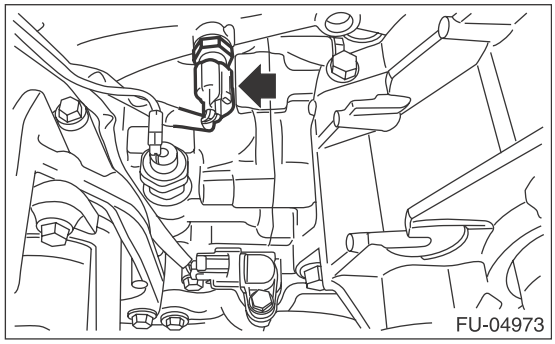

B: INSTALLATION

Install in the reverse order of removal.

NOTE:
Use a new gasket.

Tightening torque:
18 N·m (1.8 kgf-m, 13.3 ft-lb)

C: INSPECTION

1) Check that the engine coolant temperature sensor has no deformation, cracks or other damages.
2) Immerse the engine coolant temperature sensor and a thermometer in water.

CAUTION:
Take care not to allow water to get into the engine coolant temperature sensor connector. Completely remove any water inside.

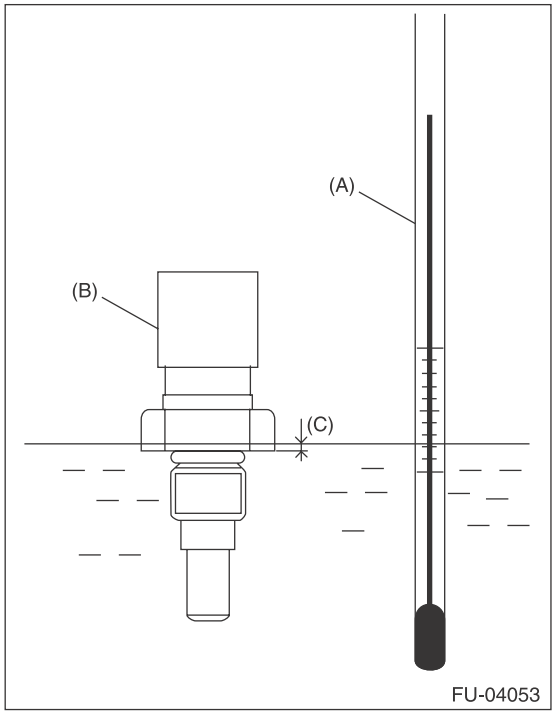

(A) Thermometer
(B) Engine coolant temperature sensor
(C) Hexagonal part height: To approx. $^1/_3$

3) Raise water temperature gradually, measure the resistance between the engine coolant temperature sensor terminals when the temperature is 20°C (68°F) and 80°C (176°F).

NOTE:
Agitate the water for even temperature distribution.

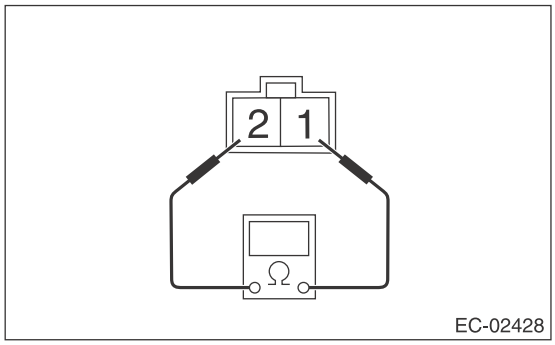

Water temperature	Terminal No.	Standard
20°C (68°F)	1 and 2	2.45±0.2 kΩ
80°C (176°F)		0.318±0.013 kΩ

5. Crankshaft Position Sensor

A: REMOVAL

1) Remove the collector cover.
2) Disconnect the ground cable from battery.

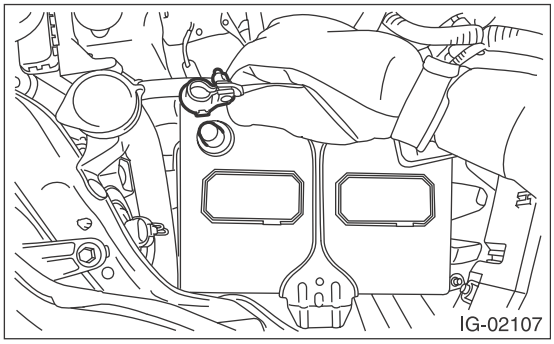

3) Remove the bolt which secures crankshaft position sensor to oil pump.

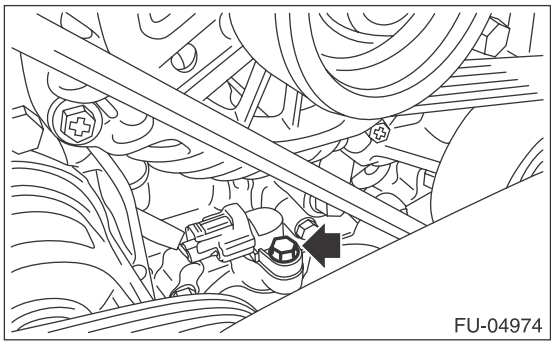

4) Remove the crankshaft position sensor, and disconnect the connector from the crankshaft position sensor.

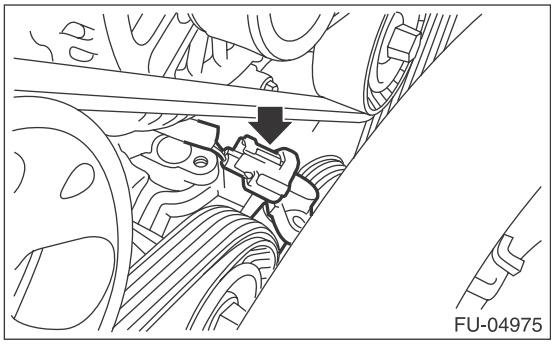

B: INSTALLATION

Install in the reverse order of removal.

Tightening torque:
6.4 N·m (0.7 kgf-m, 4.7 ft-lb)

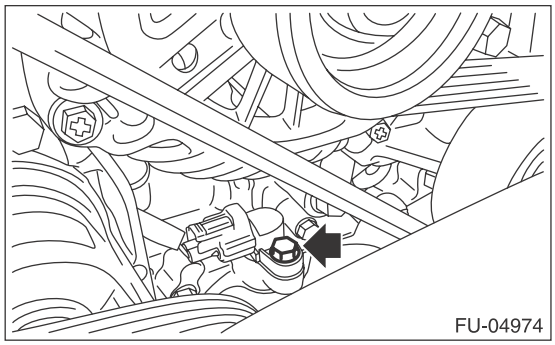

C: INSPECTION

1. CRANKSHAFT POSITION SENSOR (METHOD WITH CIRCUIT TESTER)

1) Measure the resistance between crankshaft position sensor terminals.

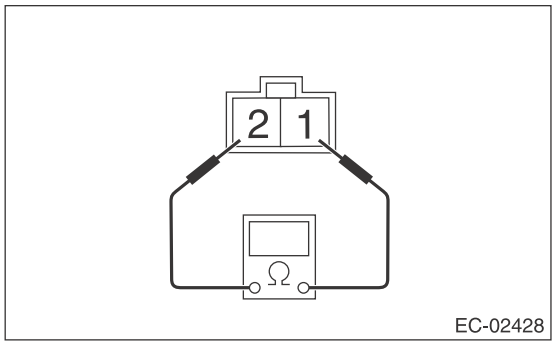

Terminal No.	Standard
1 and 2	2.04±0.204 kΩ

2. CRANKSHAFT POSITION SENSOR (METHOD WITH OSCILLOSCOPE)

1) Prepare an oscilloscope.
2) Remove the glove box lid assembly. <Ref. to EI-65, REMOVAL, Glove Box.>

3) Connect the probe to ECM connector.

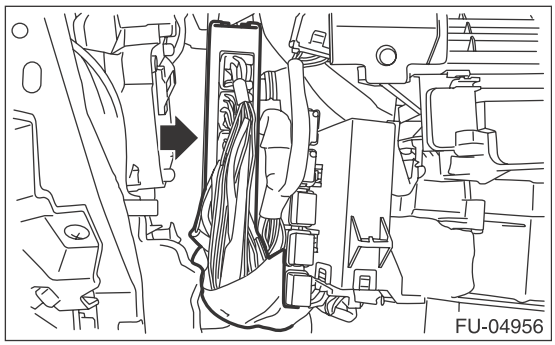

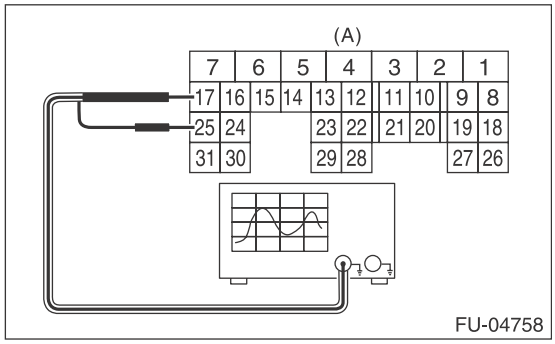

(A) To ECM connector

Terminal No.	Probe
17	+
25	–

4) Start the engine and let it idle.
5) Check that the pattern is the same as the waveform and voltage shown below.

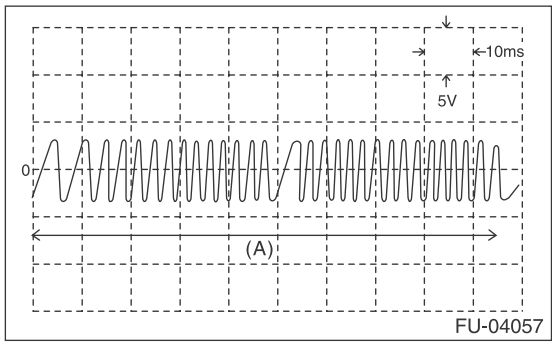

(A) One crankshaft rotation

6) After inspection, install the related parts in the reverse order of removal.

3. OTHER INSPECTIONS

Check that the crankshaft position sensor has no deformation, cracks or other damages.

6. Camshaft Position Sensor

A: REMOVAL

1. INTAKE SIDE

• Camshaft position sensor RH

1) Disconnect the ground cable from battery.

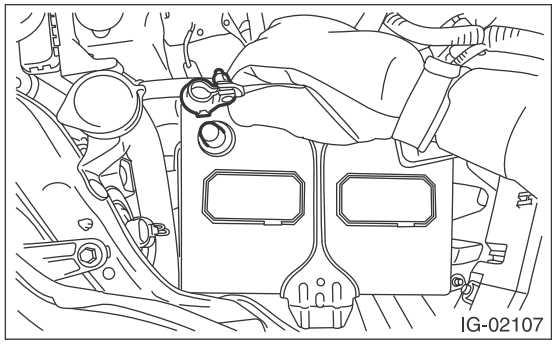

2) Disconnect the connector from the camshaft position sensor RH, and remove the camshaft position sensor RH.

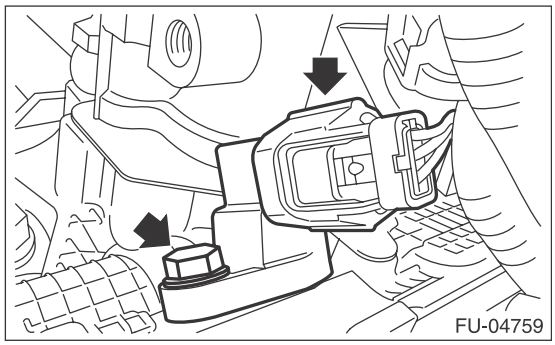

• Camshaft position sensor LH

1) Disconnect the ground cable from battery.

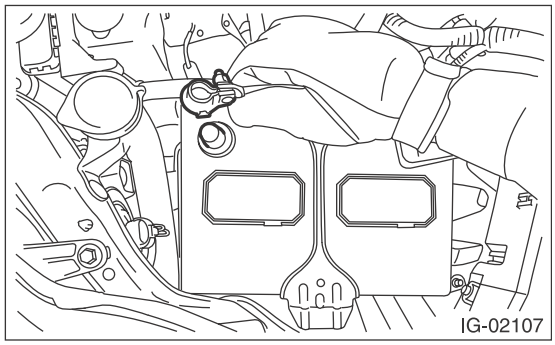

2) Remove the intake manifold. <Ref. to FU(H4DOTC)-17, REMOVAL, Intake Manifold.>

3) Remove the camshaft position sensor LH.

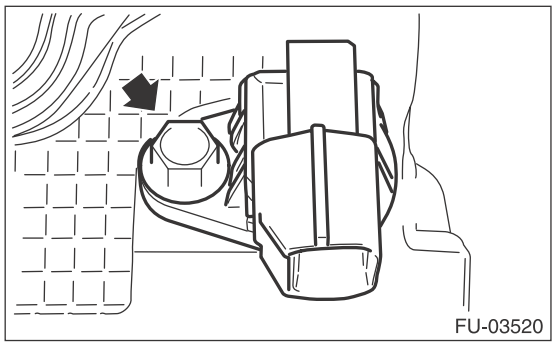

2. EXHAUST SIDE

1) Disconnect the ground cable from battery.

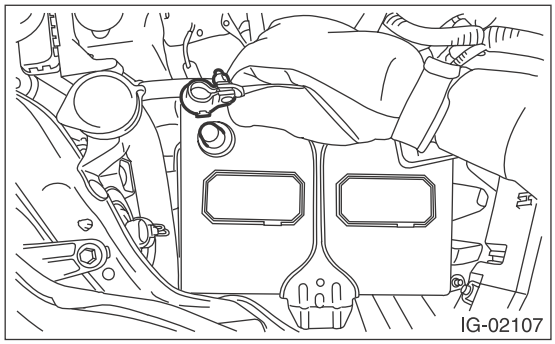

2) Lift up the vehicle.
3) Remove the under cover. <Ref. to EI-35, REMOVAL, Front Under Cover.>
4) Disconnect the connector from the camshaft position sensor, and remove the camshaft position sensor.

• RH side

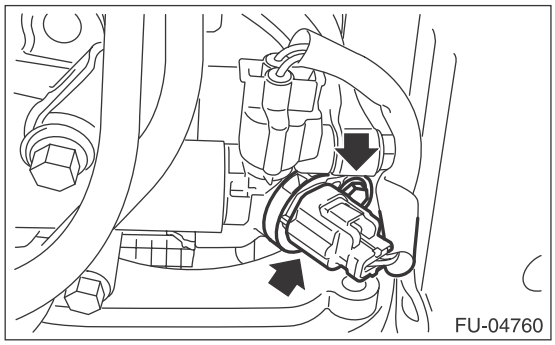

• LH side

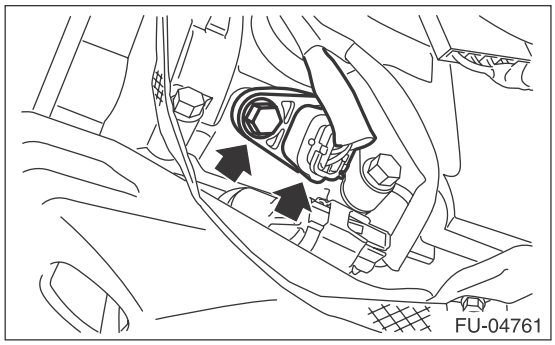

B: INSTALLATION

1. INTAKE SIDE

Install in the reverse order of removal.

Tightening torque:
6.4 N·m (0.7 kgf-m, 4.7 ft-lb)

2. EXHAUST SIDE

Install in the reverse order of removal.

Tightening torque:
6.4 N·m (0.7 kgf-m, 4.7 ft-lb)

C: INSPECTION

1. CAMSHAFT POSITION SENSOR (METHOD WITH OSCILLOSCOPE)

1) Prepare an oscilloscope.
2) Remove the glove box lid assembly. <Ref. to EI-65, REMOVAL, Glove Box.>
3) Connect the probe to ECM connector.

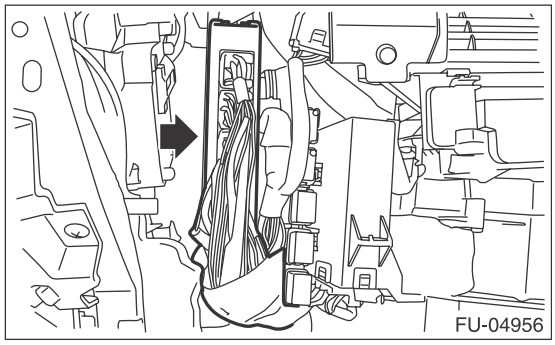

- Intake camshaft position sensor

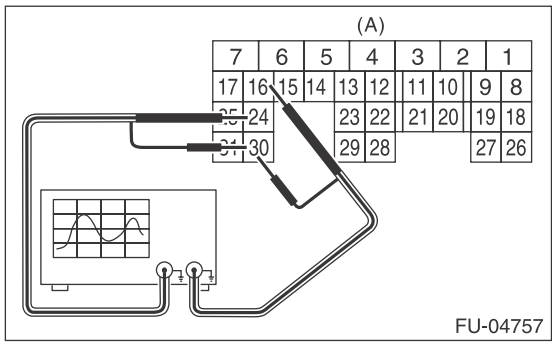

(A) To ECM connector

- Exhaust camshaft position sensor

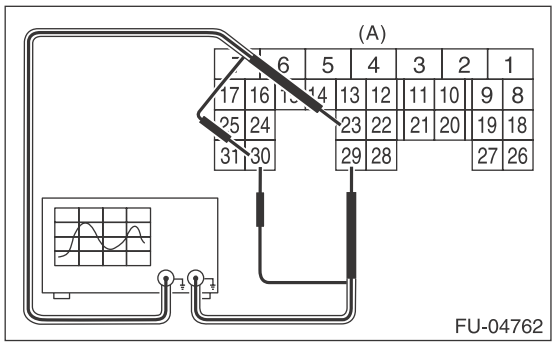

(A) To ECM connector

Camshaft position sensor		Terminal No.	Probe
Intake	RH	24	+
	LH	16	+
Exhaust	RH	23	+
	LH	29	+
RH and LH		30	–

4) Start the engine and let it idle.
5) Check that the pattern is the same as the waveform and voltage shown below.

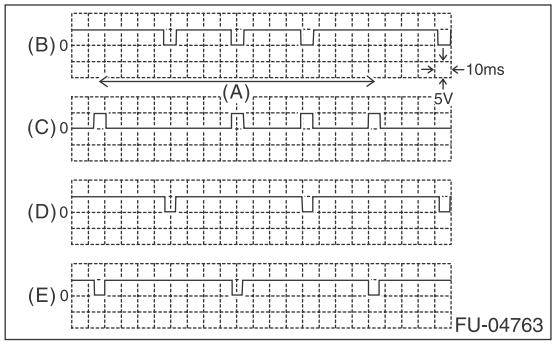

(A) One camshaft rotation
(B) Intake camshaft position sensor RH
(C) Intake camshaft position sensor LH
(D) Exhaust camshaft position sensor RH
(E) Exhaust camshaft position sensor LH

6) After inspection, install the related parts in the reverse order of removal.

2. OTHER INSPECTIONS

Check that the camshaft position sensor has no deformation, cracks or other damages.

7. Knock Sensor

A: REMOVAL

1) Remove the collector cover.
2) Disconnect the ground cable from battery.

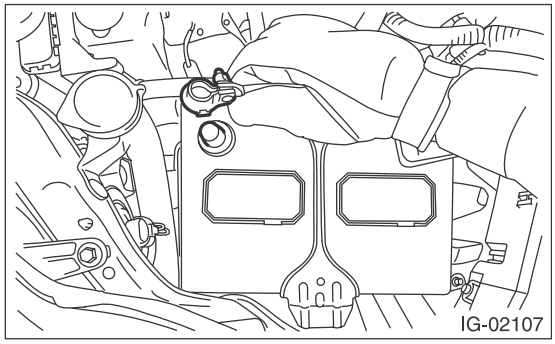

3) Remove the intercooler. <Ref. to IN(H4DOTC)-17, REMOVAL, Intercooler.>
4) Disconnect the connector from the knock sensor.

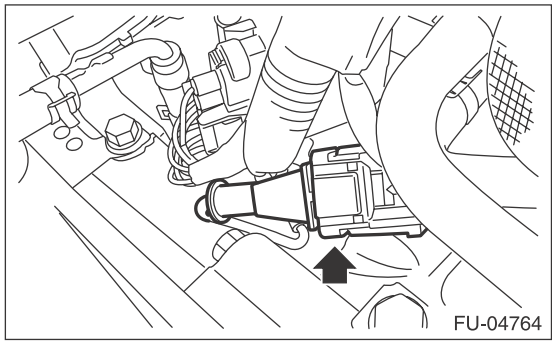

5) Remove the knock sensor from cylinder block.

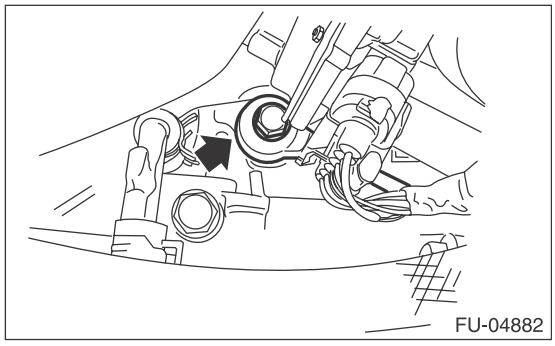

B: INSTALLATION

1) Install the knock sensor to the cylinder block.

NOTE:
The portion of the knock sensor cord that is pulled out must be positioned at a 60° angle relative to the engine rear.

Tightening torque:
24 N·m (2.4 kgf-m, 17.7 ft-lb)

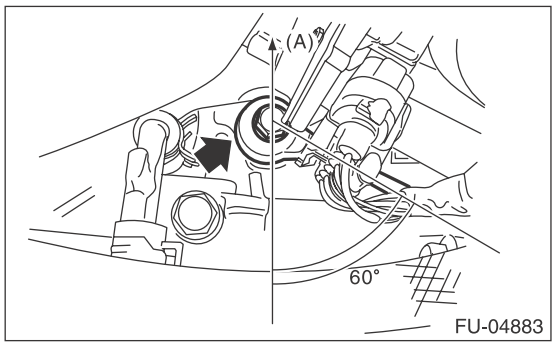

(A) Front side of vehicle

2) Connect the connector to the knock sensor.

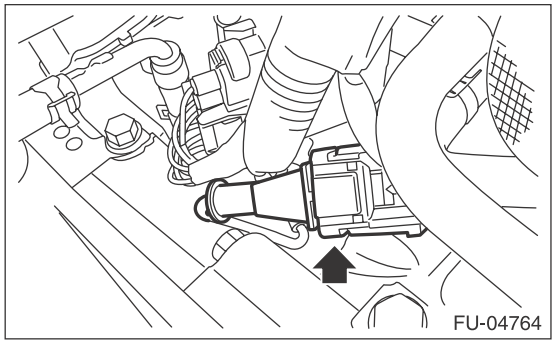

3) Install the intercooler. <Ref. to IN(H4DOTC)-18, INSTALLATION, Intercooler.>
4) Connect the ground cable to battery.

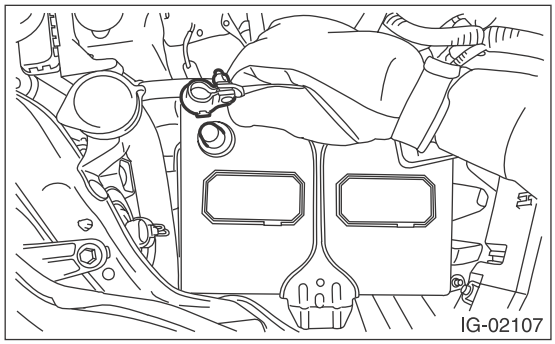

5) Install the collector cover.

C: INSPECTION

1) Check that the knock sensor has no deformation, cracks or other damages.
2) Measure the resistance between knock sensor terminals.

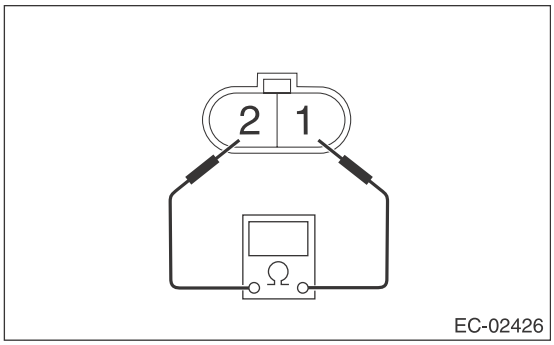

Terminal No.	Standard
1 and 2	560±28 kΩ

8. Throttle Position Sensor

A: SPECIFICATION

Throttle body is a non-disassembled part, so do not remove the throttle position sensor from throttle body.
Refer to “Throttle Body” for removal and installation procedure. <Ref. to FU(H4DOTC)-15, REMOVAL, Throttle Body.> <Ref. to FU(H4DOTC)-15, INSTALLATION, Throttle Body.>

9. Mass Air Flow and Intake Air Temperature Sensor

A: REMOVAL

1) Disconnect the ground cable from battery.

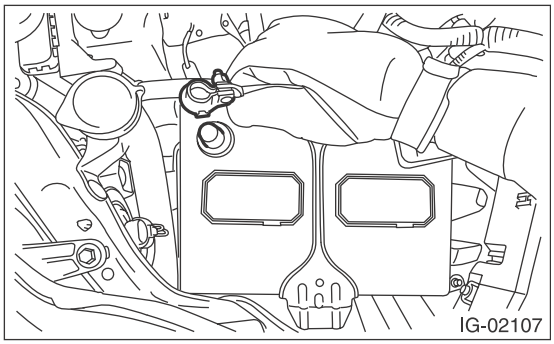

2) Disconnect the connector from the mass air flow and intake air temperature sensor, and remove the mass air flow and intake air temperature sensor.

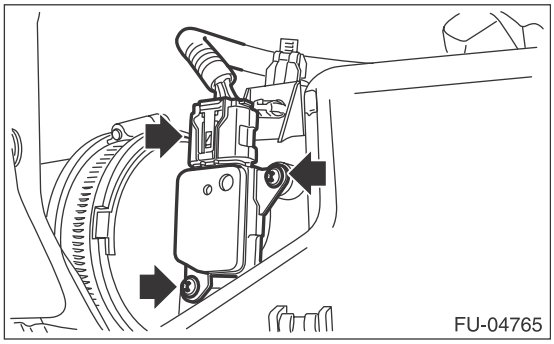

B: INSTALLATION

Install in the reverse order of removal.

Tightening torque:
1 N·m (0.1 kgf-m, 0.7 ft-lb)

C: INSPECTION

1. CHECK MASS AIR FLOW SENSOR UNIT

1) Connect battery positive terminal to terminal No. 3 and battery ground terminal to terminal No. 4, circuit tester positive terminal to terminal No. 5 and the circuit tester negative terminal to terminal No. 4.

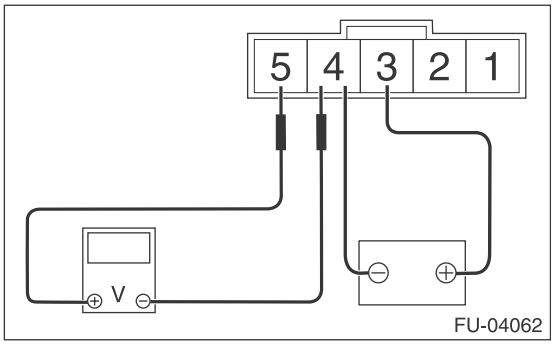

2) Check that the voltage changes when air is blown to the mass air flow sensor unit from arrow direction.

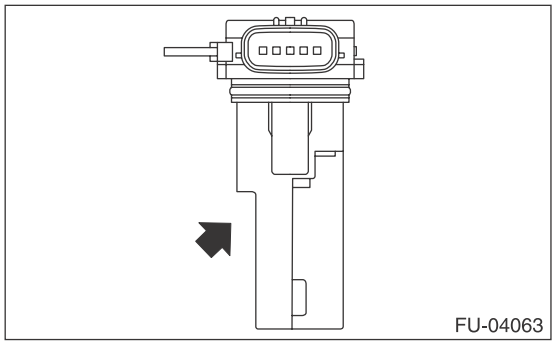

2. CHECK INTAKE AIR TEMPERATURE SENSOR UNIT

Measure the resistance between intake air temperature sensor terminals.

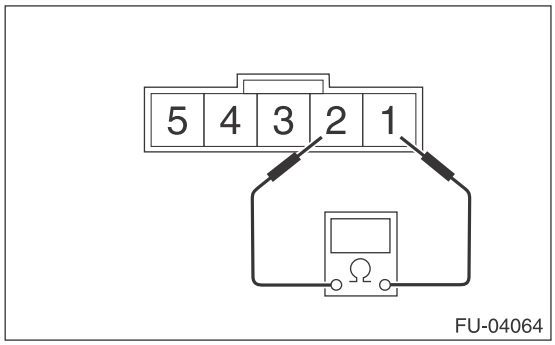

Temperature	Terminal No.	Standard
–20°C (–4°F)	1 and 2	16.0±2.4 kΩ
20°C (68°F)		2.45±0.24 kΩ
60°C (140°F)		0.580±0.087 kΩ

3. OTHER INSPECTIONS

1) Check that the mass air flow and intake air temperature sensor has no deformation, cracks or other damages.
2) Check that the mass air flow and intake air temperature sensor has no dirt.

10. Manifold Absolute Pressure Sensor

A: REMOVAL

1) Remove the collector cover.
2) Disconnect the ground cable from battery.

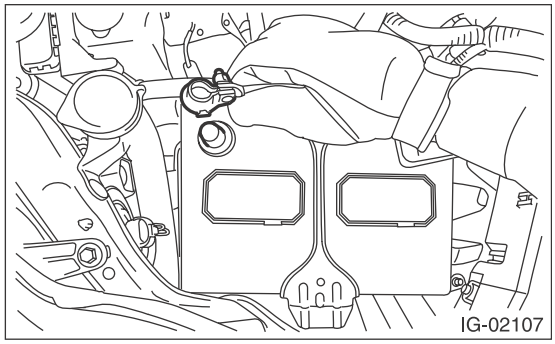

3) Disconnect the connector from manifold absolute pressure sensor (A), and remove the filter assembly (B) from intake manifold.
4) Remove the manifold absolute pressure sensor from the solenoid valve bracket.

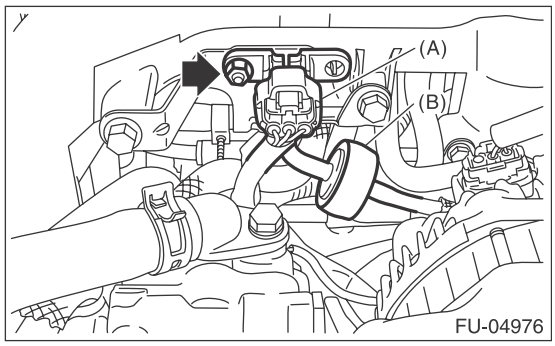

B: INSTALLATION

Install in the reverse order of removal.

Tightening torque:
6.4 N·m (0.7 kgf-m, 4.7 ft-lb)

C: INSPECTION

1) Check that the manifold absolute pressure sensor has no deformation, cracks or other damages.
2) Connect dry-cell battery positive terminal to terminal No. 3 and dry-cell battery ground terminal to terminal No. 1, circuit tester positive terminal to terminal No. 2 and the circuit tester negative terminal to terminal No. 1.

NOTE:
- Use new dry-cell batteries.
- Using circuit tester, check the voltage of a single dry-cell battery is 1.6 V or more. And also check the voltage of three batteries in series is between 4.8 V and 5.2 V.

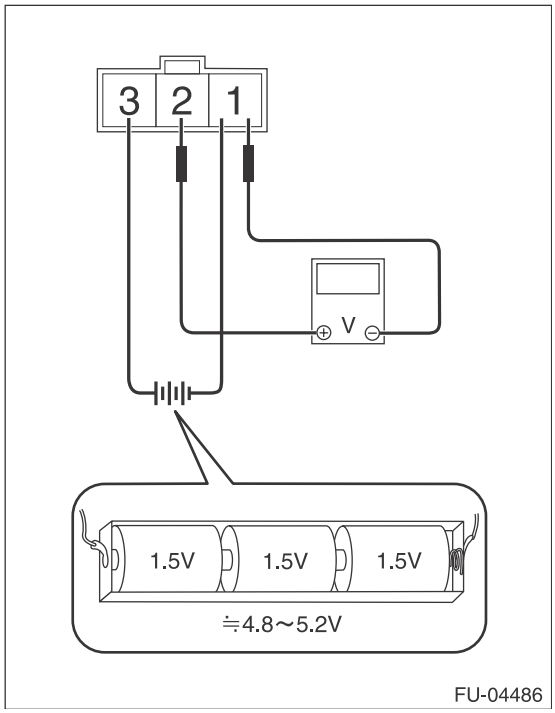

3) Check the voltage at a normal atmospheric pressure.

NOTE:
The atmospheric pressure at higher altitude is lower than normal. Therefore, the voltage is lower than the standard value.

Terminal No.	Standard
2 (+) and 1 (–)	Approx. 2.2 V (when 25°C (77°F))

4) Connect the Mighty Vac to the pressure port (A) of manifold absolute pressure sensor.

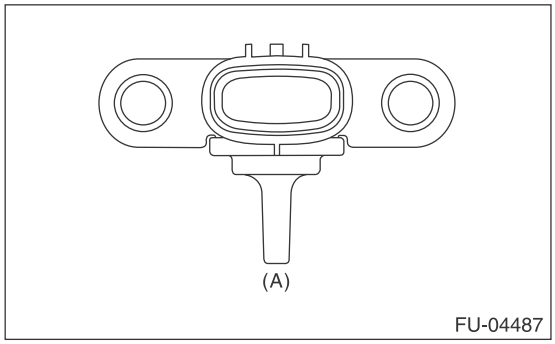

5) Check the voltage when generating vacuum and positive pressure using Mighty Vac.

CAUTION:
Do not apply vacuum of less than –88 — 200 kPa (–0.9 — 2.04 kgf/cm^2, –12.8 — 29.0 psi). Doing so may damage the manifold absolute pressure sensor.

NOTE:
When vacuum occurs at the pressure port of manifold absolute pressure sensor, the voltage will drop from the value as in step 3). When positive pressure occurs, on the other hand, the voltage will rise.

Pressure	Terminal No.	Standard
–88 kPa (–0.9 kgf/cm^2, –12.8 psi)	2 (+) and 1 (–)	Approx. 1.0 V (when 25°C (77°F))
152 kPa (1.55 kgf/cm^2, 22.0 psi)		Approx. 4.5 V (when 25°C (77°F))

11.Fuel Injector

A: REMOVAL

1. RH SIDE

1) Release the fuel pressure. <Ref. to FU(H4DOTC)-65, RELEASING OF FUEL PRESSURE, PROCEDURE, Fuel.>
2) Remove the collector cover.
3) Disconnect the ground cable from battery.

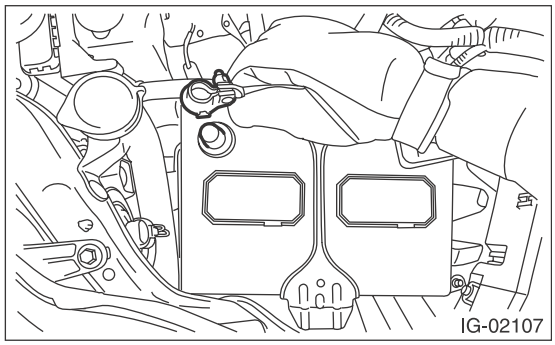

4) Open the fuel filler lid and remove the fuel filler cap.
5) Remove the intake manifold. <Ref. to FU(H4DOTC)-17, REMOVAL, Intake Manifold.>
6) Remove the intake manifold protector RH from intake manifold.

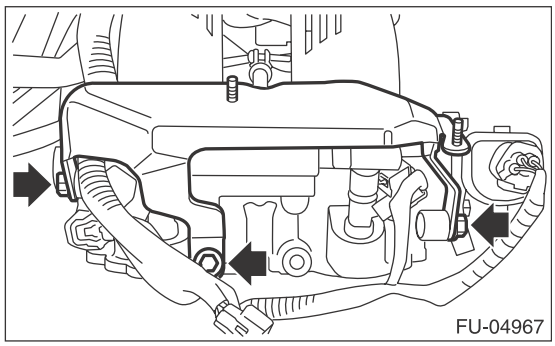

7) Disconnect the connector from the fuel injector and tumble generator valve assembly.

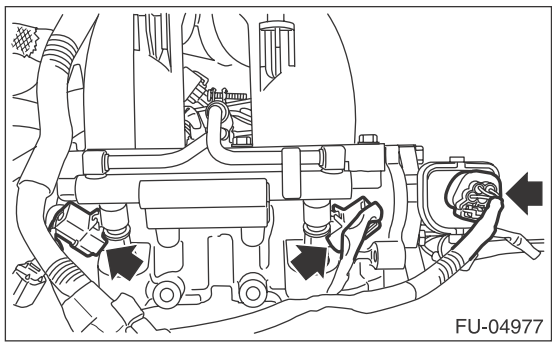

8) Remove the bolt which secures the fuel pipe to the intake manifold.

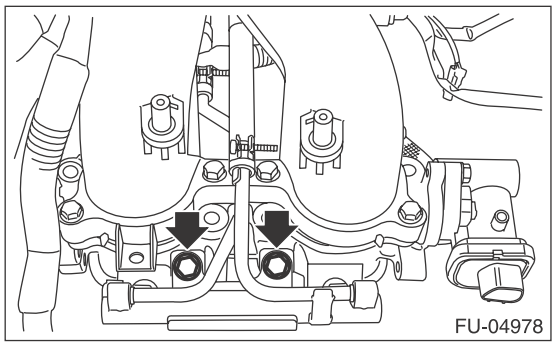

9) Remove the fuel injector.

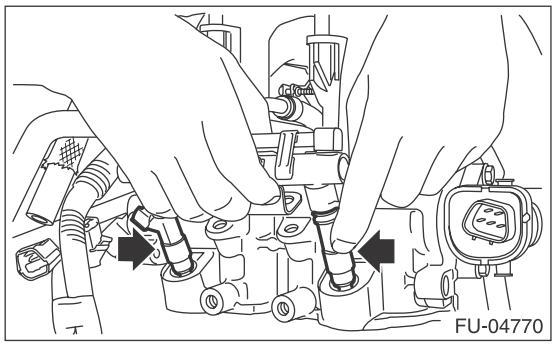

2. LH SIDE

1) Release the fuel pressure. <Ref. to FU(H4DOTC)-65, RELEASING OF FUEL PRESSURE, PROCEDURE, Fuel.>
2) Remove the collector cover.
3) Disconnect the ground cable from battery.

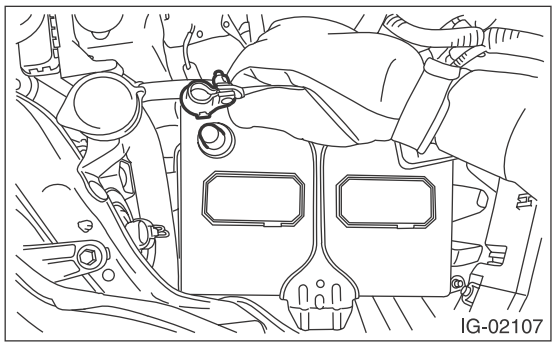

4) Open the fuel filler lid and remove the fuel filler cap.
5) Remove the intake manifold. <Ref. to FU(H4DOTC)-17, REMOVAL, Intake Manifold.>

6) Disconnect front oxygen (A/F) sensor connector (A) and rear oxygen sensor connector (B) from the intake manifold protector LH, and also remove clip (C) which holds the engine harness.

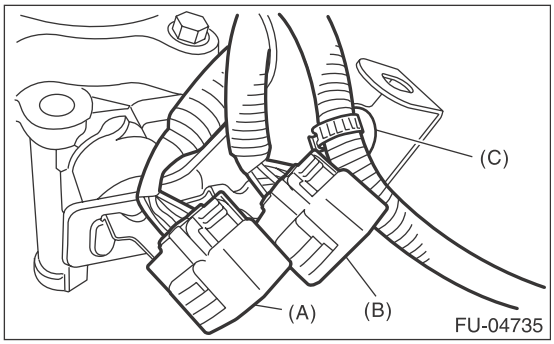

7) Remove the engine ground terminal from the intake manifold protector LH, and remove the intake manifold protector LH from the intake manifold.

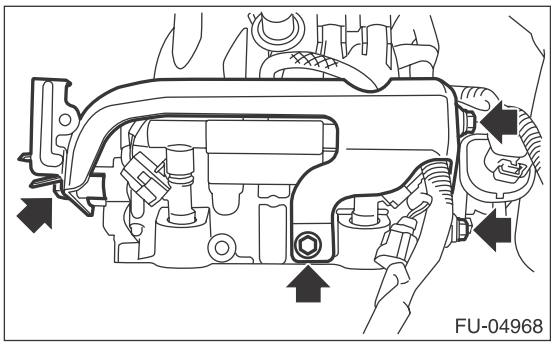

8) Disconnect the connector from fuel injector.

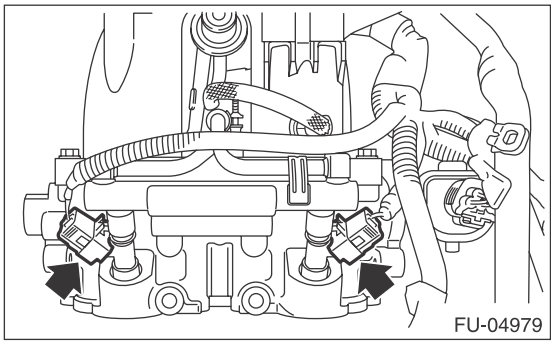

9) Remove the bolt which secures the fuel delivery pipe to the intake manifold.

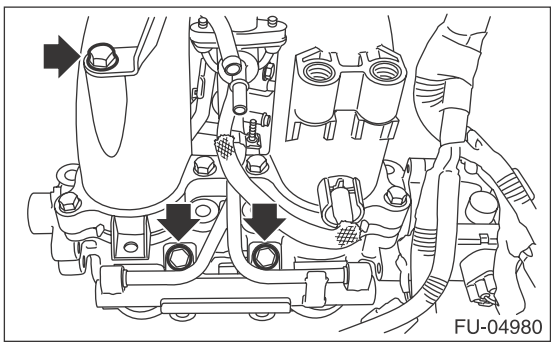

10) Remove the fuel injector.

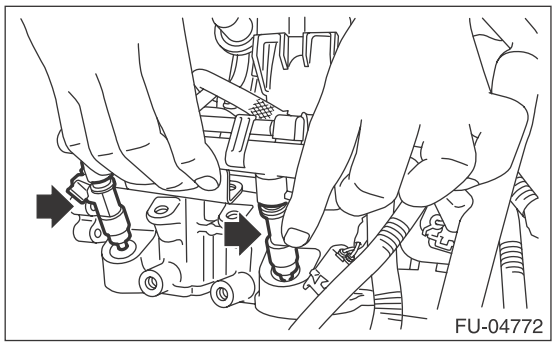

B: INSTALLATION

1. RH SIDE

Install in the reverse order of removal.

NOTE:
Use new O-rings and seal rings.

Tightening torque:
19 N·m (1.9 kgf-m, 14.0 ft-lb)

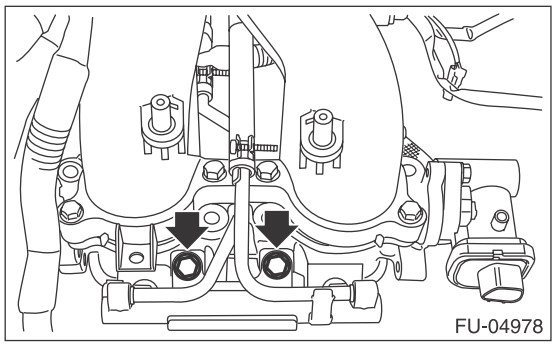

Tightening torque:
19 N·m (1.9 kgf-m, 14.0 ft-lb)

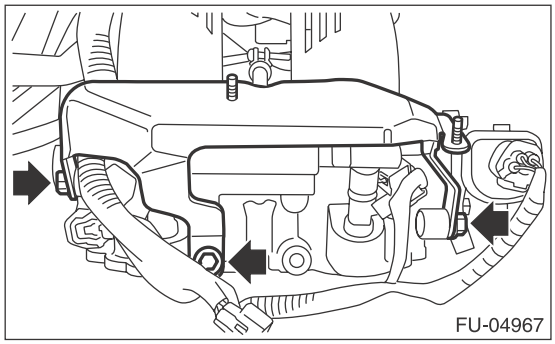

2. LH SIDE

Install in the reverse order of removal.

NOTE:
Use new O-rings and seal rings.

Tightening torque:
T1: 6.4 N·m (0.7 kgf-m, 4.7 ft-lb)
T2: 19 N·m (1.9 kgf-m, 14.0 ft-lb)

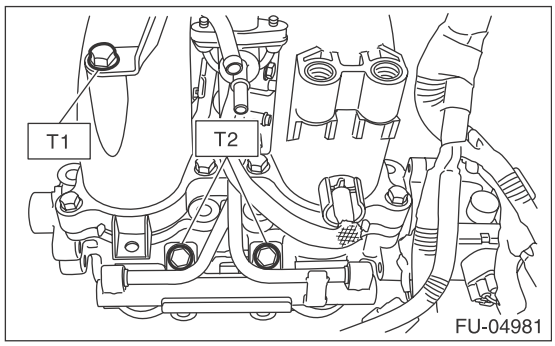

Tightening torque:
19 N·m (1.9 kgf-m, 14.0 ft-lb)

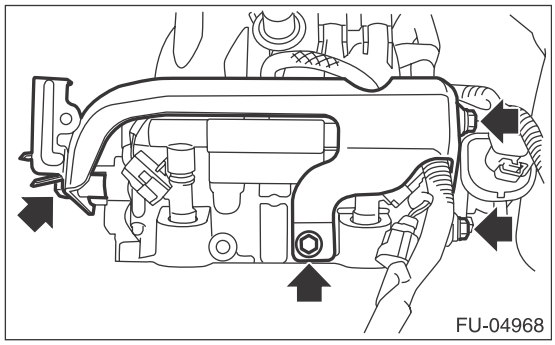

C: INSPECTION

1) Check that the fuel injector has no deformation, cracks or other damages.
2) Measure the resistance between fuel injector terminals.

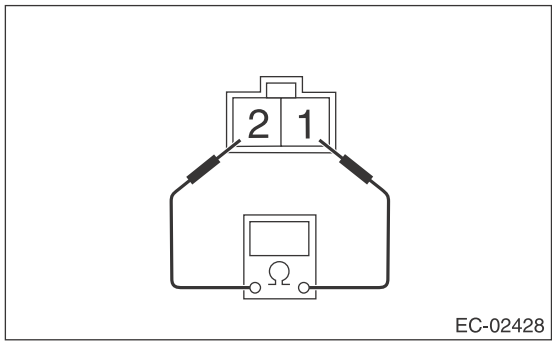

Terminal No.	Standard
1 and 2	Approx. 12.0 Ω (when 20°C (68°F))

12. Tumble Generator Valve Assembly

A: REMOVAL

1) Release the fuel pressure. <Ref. to FU(H4DOTC)-65, RELEASING OF FUEL PRESSURE, PROCEDURE, Fuel.>
2) Remove the collector cover.
3) Disconnect the ground cable from battery.

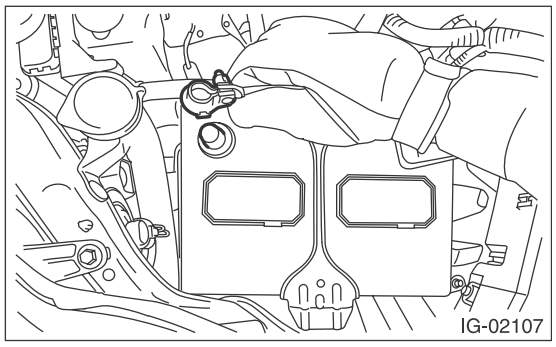

4) Open the fuel filler lid and remove the fuel filler cap.
5) Remove the intake manifold. <Ref. to FU(H4DOTC)-17, REMOVAL, Intake Manifold.>
6) Disconnect the connector from the tumble generator valve assembly.

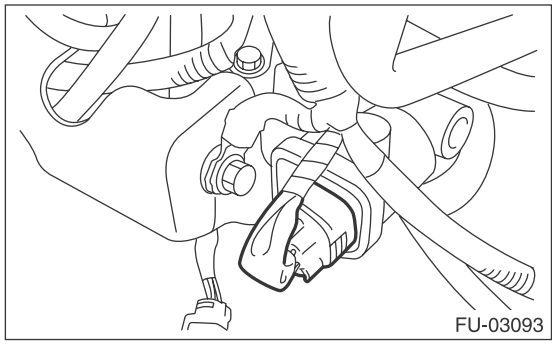

7) Remove the fuel injector. <Ref. to FU(H4DOTC)-43, REMOVAL, Fuel Injector.>
8) Remove the tumble generator valve assembly from the intake manifold.

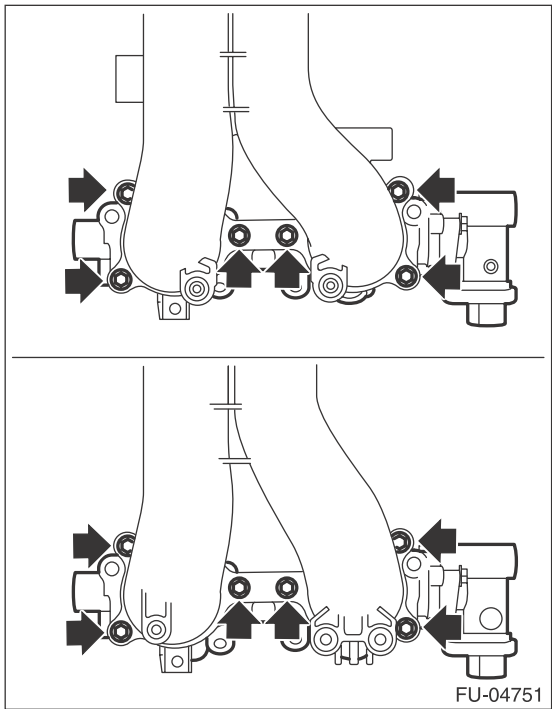

B: INSTALLATION

Install in the reverse order of removal.

NOTE:
Use a new gasket.

Tightening torque:
8.3 N·m (0.8 kgf-m, 6.1 ft-lb)

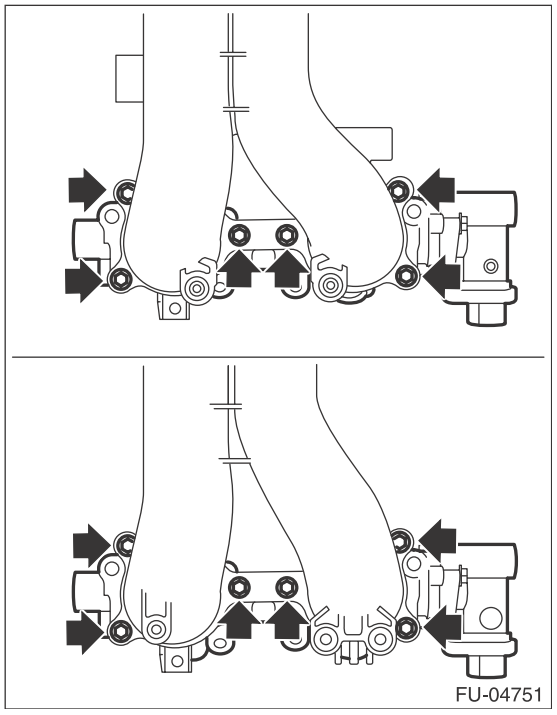

C: INSPECTION

1) Check that the tumble generator valve assembly has no deformation, cracks or other damages.
2) Check tumble generator valve for contamination or clogging.

13. Tumble Generator Valve Actuator

A: SPECIFICATION

The tumble generator valve assembly cannot be disassembled.
Refer to “Tumble Generator Valve Assembly” for removal and installation procedures. <Ref. to FU(H4DOTC)-46, REMOVAL, Tumble Generator Valve Assembly.> <Ref. to FU(H4DOTC)-46, INSTALLATION, Tumble Generator Valve Assembly.>

14. Oil Flow Control Solenoid Valve

A: REMOVAL

1. INTAKE SIDE

Oil flow control solenoid valve is a unit with front camshaft cap.
Refer to “Camshaft” for the removal procedure. <Ref. to ME(H4DOTC)-62, REMOVAL, Camshaft.>

2. EXHAUST SIDE

1) Disconnect the ground cable from battery.

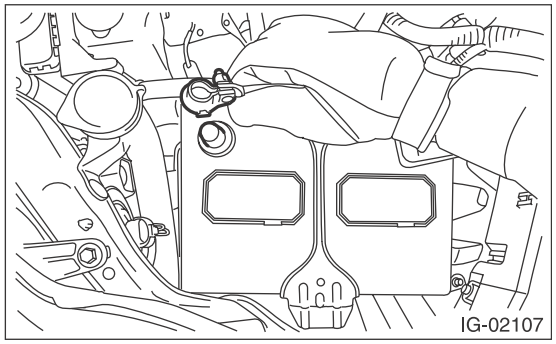

2) Lift up the vehicle.
3) Remove the under cover. <Ref. to EI-35, REMOVAL, Front Under Cover.>
4) Remove the center exhaust pipe. (LH side only) <Ref. to EX(H4DOTC)-12, REMOVAL, Center Exhaust Pipe.>
5) Remove ground cable (A) from the engine harness cover, and remove the engine harness cover from the engine. (LH side only)

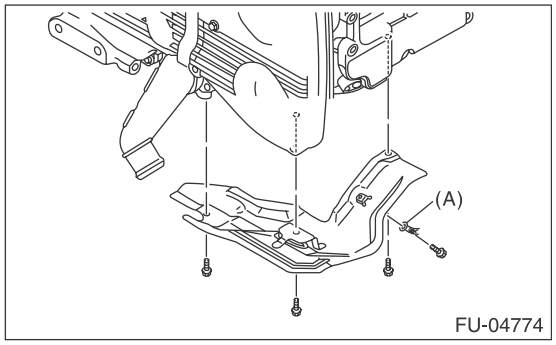

6) Disconnect the connector from the oil flow control solenoid valve, and remove the oil flow control solenoid valve from the cylinder head.

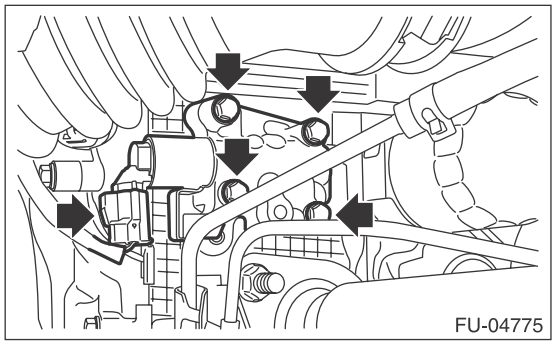

B: INSTALLATION

1. INTAKE SIDE

Refer to “Camshaft” for installation procedure. <Ref. to ME(H4DOTC)-65, INSTALLATİON, Camshaft.>

2. EXHAUST SIDE

Install in the reverse order of removal.

NOTE:
Use a new gasket.

Tightening torque:
10 N·m (1.0 kgf-m, 7.4 ft-lb)

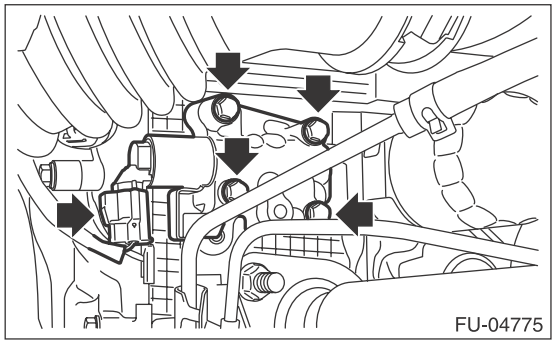

Tightening torque:
T1: 6.4 N·m (0.7 kgf-m, 4.7 ft-lb)
T2: 7 N·m (0.7 kgf-m, 5.2 ft-lb)

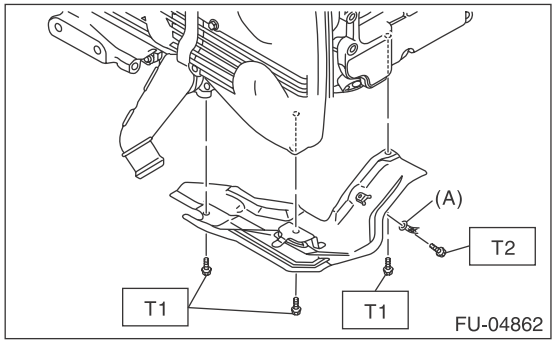

C: DISASSEMBLY

1. INTAKE SIDE

1) Remove the two bolts which secure the oil return cover, and remove the oil return cover and gasket.
2) Remove the bolt which secures the oil flow control solenoid valve and remove the oil flow control solenoid valve.

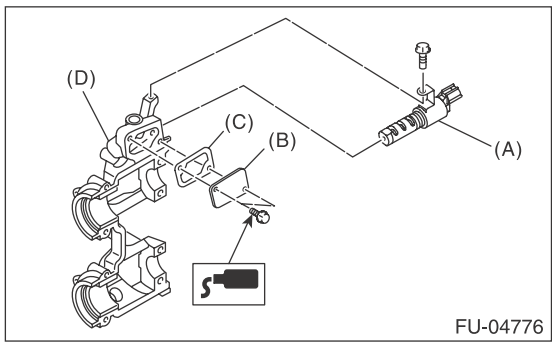

(A) Oil flow control solenoid valve
(B) Oil return cover
(C) Gasket
(D) Front camshaft cap

2. EXHAUST SIDE

The oil flow control solenoid valve on exhaust side cannot be disassembled.

D: ASSEMBLY

1. INTAKE SIDE

1) Install the oil flow control solenoid valve.

Tightening torque:
6.4 N·m (0.7 kgf-m, 4.7 ft-lb)

2) Apply liquid gasket to the two bolts which secure the oil return cover.

Liquid gasket:
THREE BOND 1324 (Part No. 004403042) or equivalent

3) Install the oil return cover and gasket.

NOTE:
Use a new gasket.

Tightening torque:
9 N·m (0.9 kgf-m, 6.6 ft-lb)

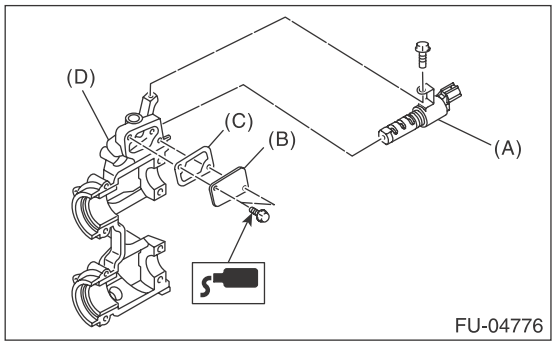

(A) Oil flow control solenoid valve
(B) Oil return cover
(C) Gasket
(D) Front camshaft cap

2. EXHAUST SIDE

The oil flow control solenoid valve on exhaust side cannot be disassembled.

E: INSPECTION

1) Check that the oil flow control solenoid valve has no deformation, cracks or other damages.
2) Measure the resistance between the oil flow control solenoid valve terminals.

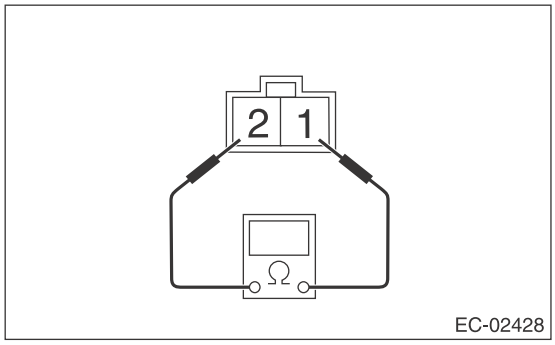

Terminal No.	Standard
1 and 2	7.4±0.5 Ω (when 20°C (68°F))

15. Wastegate Control Solenoid Valve

A: REMOVAL

1) Disconnect the ground cable from battery.

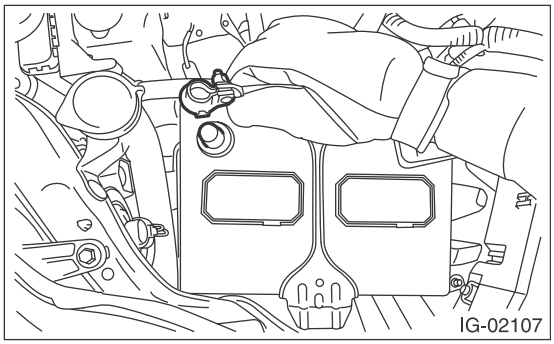

2) Remove the radiator sub fan motor assembly. <Ref. to CO(H4DOTC)-27, REMOVAL, Radiator Sub Fan and Fan Motor.>
3) Remove the screws which hold the wastegate control solenoid valve to the intake duct.

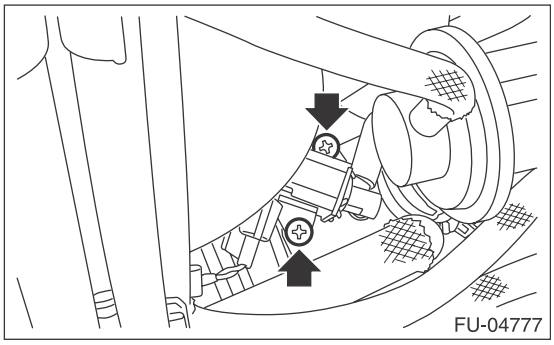

4) Lift up the vehicle.
5) Remove the under cover. <Ref. to EI-35, REMOVAL, Front Under Cover.>
6) Disconnect the connector and air control hose from the wastegate control solenoid valve, and remove the wastegate control solenoid valve from the intake duct.

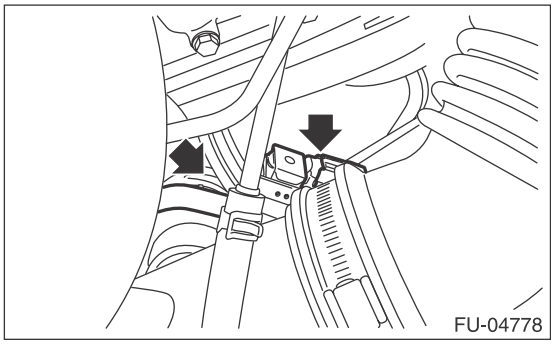

B: INSTALLATION

Install in the reverse order of removal.

NOTE:
Use new O-rings.

Tightening torque:
1 N·m (0.1 kgf-m, 0.7 ft-lb)

C: INSPECTION

1) Check that the wastegate control solenoid valve has no deformation, cracks or other damages.
2) Check the resistance between the wastegate control solenoid valve terminals.

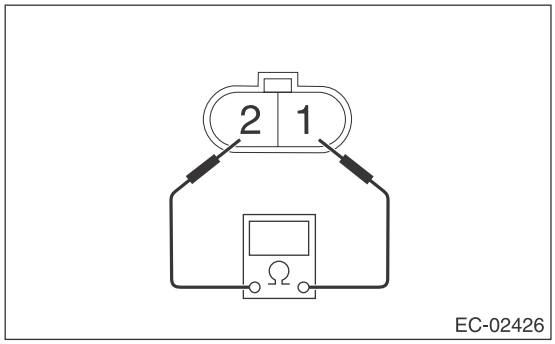

Terminal No.	Standard
1 and 2	24±3 Ω (when 20°C (68°F))

3) Check that air does not come out from (B) when air is blown into (A).

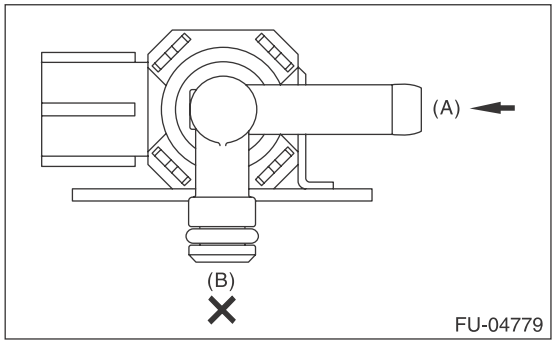

4) With terminal No. 1 connected to the battery positive terminal and terminal No. 2 to the battery ground terminal, check that air comes out from (B) when air is blown into (A).

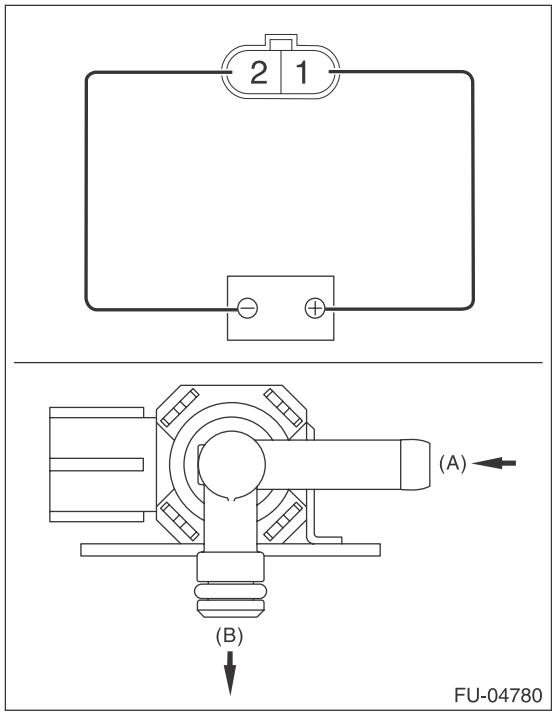

16.Front Oxygen (A/F) Sensor

A: REMOVAL

1) Disconnect the ground cable from battery.

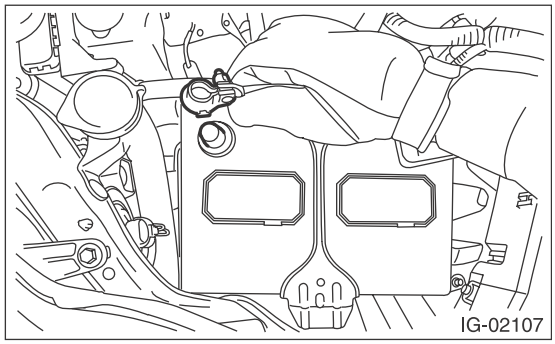

2) Remove the radiator main fan motor assembly. <Ref. to CO(H4DOTC)-27, REMOVAL, Radiator Sub Fan and Fan Motor.>

3) Disconnect the connector from the front oxygen (A/F) sensor, and remove the clip (A) holding the front oxygen (A/F) sensor harness.

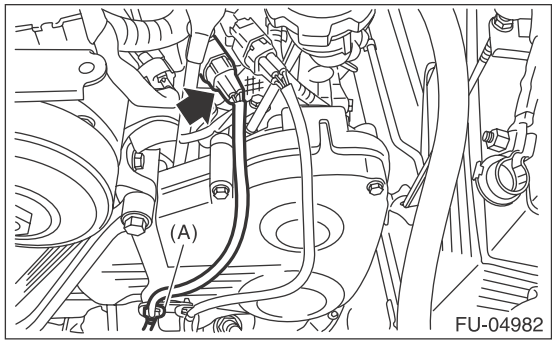

4) Apply spray-type lubricant to the threaded portion of front oxygen (A/F) sensor, and leave it for one minute or more.

5) Remove the front oxygen (A/F) sensor by using a sensor socket.

CAUTION:
When removing the front oxygen (A/F) sensor, wait until exhaust pipe cools, otherwise it will damage the exhaust pipe.

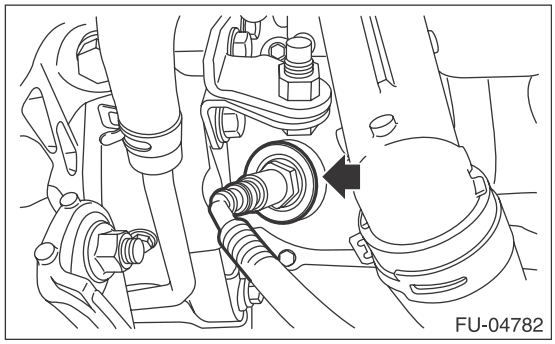

B: INSTALLATION

CAUTION:
If lubricant is spilt over the exhaust pipe, wipe it off with cloth to avoid emission of smoke or causing a fire.

1) Before installing front oxygen (A/F) sensor, apply anti-seize compound only to the threaded portion of front oxygen (A/F) sensor to make the next removal easier.

CAUTION:
Never apply anti-seize compound to the protector of front oxygen (A/F) sensor.

Anti-seize compound:
NEVER-SEEZ NSN, JET LUBE SS-30 or equivalent

2) Install the front oxygen (A/F) sensor.

Tightening torque:
30 N·m (3.1 kgf-m, 22.1 ft-lb)

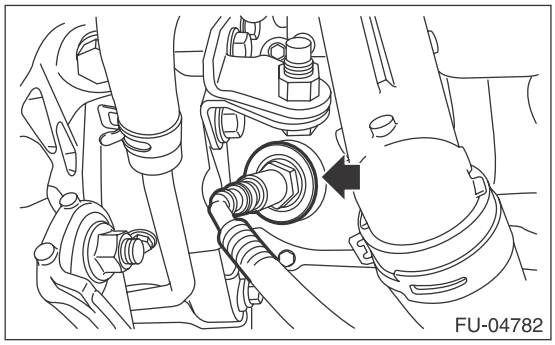

3) Connect the front oxygen (A/F) sensor connector, and secure the front oxygen (A/F) sensor harness by using the clip (A).

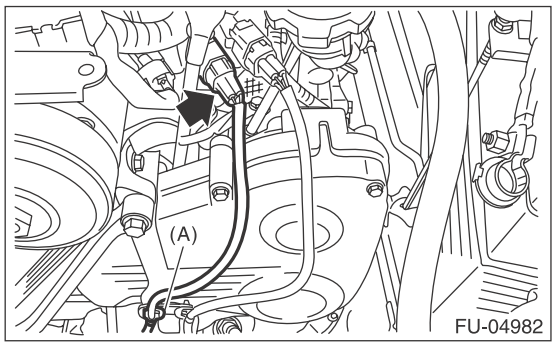

4) Install the radiator main fan motor assembly. <Ref. to CO(H4DOTC)-27, INSTALLATION, Radiator Sub Fan and Fan Motor.>

5) Connect the ground cable to battery.

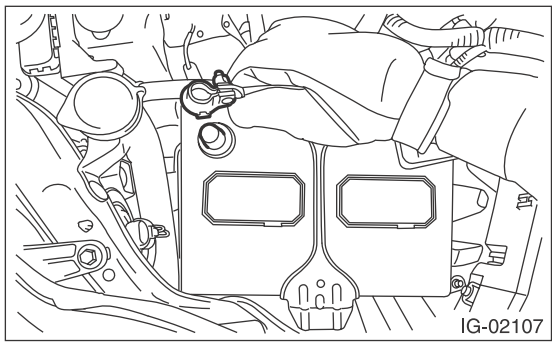

C: INSPECTION

1) Check that the front oxygen (A/F) sensor has no deformation, cracks or other damages.
2) Measure the resistance between front oxygen (A/F) sensor terminals.

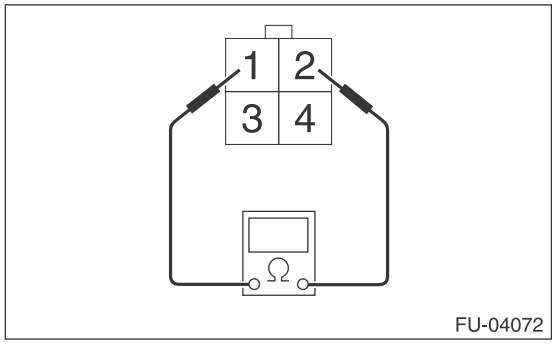

Terminal No.	Standard
1 and 2	2.4±0.24 Ω (when 20°C (68°F))

17.Rear Oxygen Sensor

A: REMOVAL

1) Disconnect the ground cable from battery.

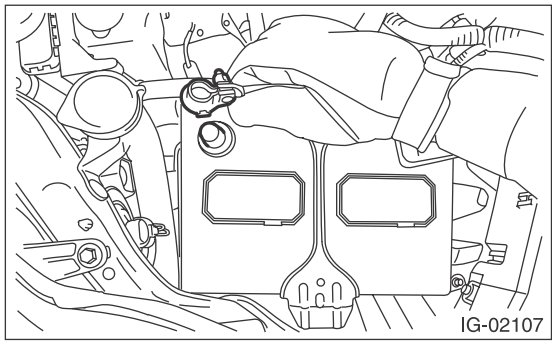

2) Remove the radiator main fan motor assembly. <Ref. to CO(H4DOTC)-27, REMOVAL, Radiator Sub Fan and Fan Motor.>

3) Disconnect the connector from the rear oxygen sensor, and remove the clip (A) holding the rear oxygen sensor harness.

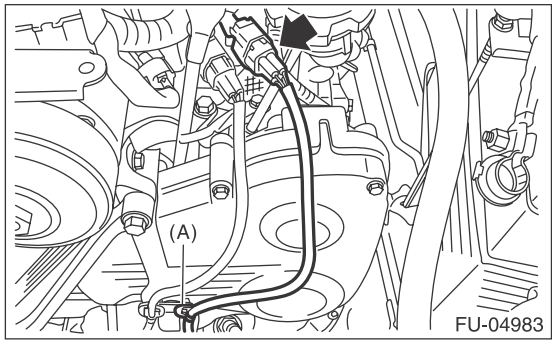

4) Apply spray-type lubricant to the threaded portion of rear oxygen sensor, and leave it for one minute or more.

5) Remove the rear oxygen (A/F) sensor by using a sensor socket.

CAUTION:
When removing the rear oxygen sensor, wait until exhaust pipe cools, otherwise it will damage the exhaust pipe.

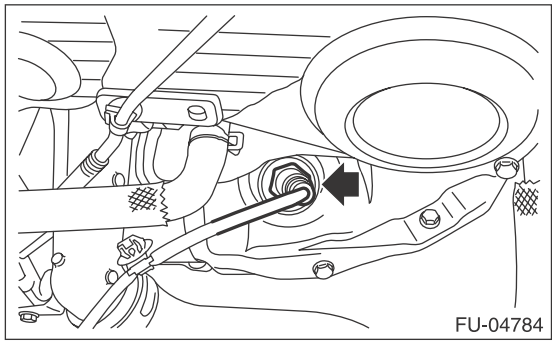

B: INSTALLATION

CAUTION:
If lubricant is spilt over the exhaust pipe, wipe it off with cloth to avoid emission of smoke or causing a fire.

1) Before installing rear oxygen sensor, apply the anti-seize compound only to the threaded portion of rear oxygen sensor to make the next removal easier.

CAUTION:
Never apply anti-seize compound to the protector of rear oxygen sensor.

Anti-seize compound:
NEVER-SEEZ NSN, JET LUBE SS-30 or equivalent

2) Install the rear oxygen sensor.

Tightening torque:
30 N·m (3.1 kgf-m, 22.1 ft-lb)

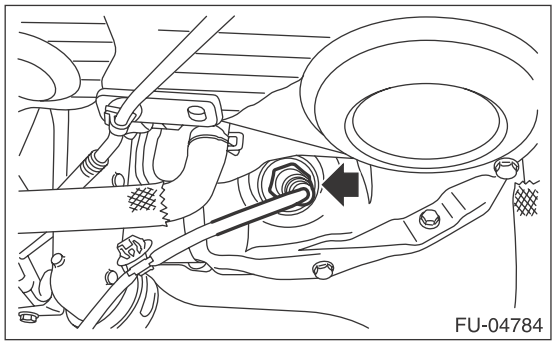

3) Connect the connector to the rear oxygen sensor, and hold the rear oxygen sensor harness with clip (A).

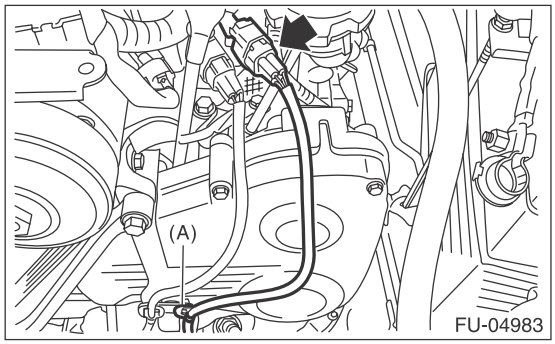

4) Install the radiator main fan motor assembly. <Ref. to CO(H4DOTC)-27, INSTALLATION, Radiator Sub Fan and Fan Motor.>

5) Connect the ground cable to battery.

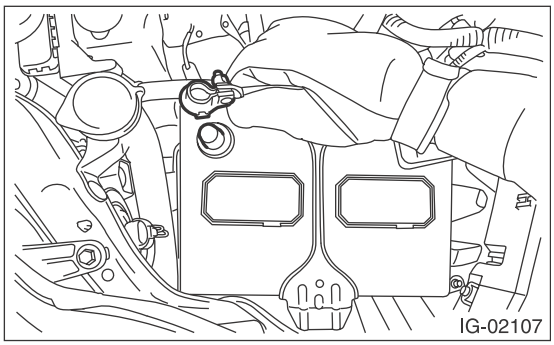

C: INSPECTION

1) Check that the rear oxygen sensor has no deformation, cracks or other damages.
2) Measure the resistance between rear oxygen sensor terminals.

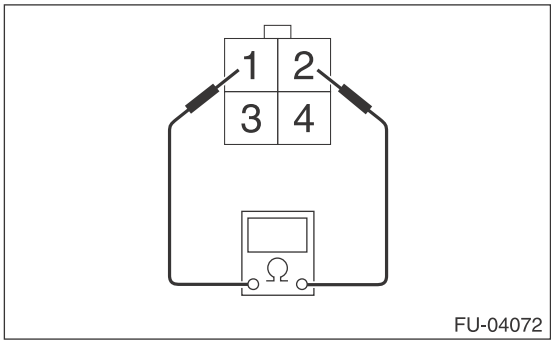

Terminal No.	Standard
1 and 2	$5.6^{+0.8}_{-0.6}$ Ω (when 20°C (68°F))

18.Engine Control Module (ECM)

A: REMOVAL

1) Disconnect the ground cable from battery.

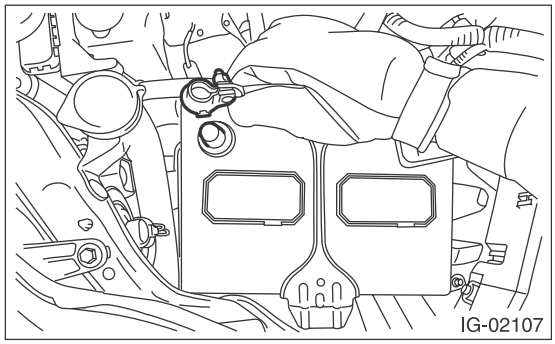

2) Remove the glove box lid assembly. <Ref. to EI-65, REMOVAL, Glove Box.>
3) Remove the connectors from ECM.

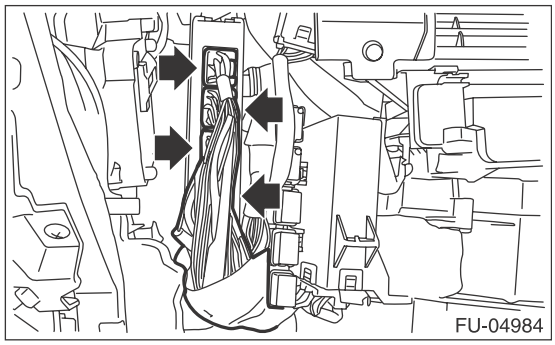

4) Remove the ECM from vehicle.

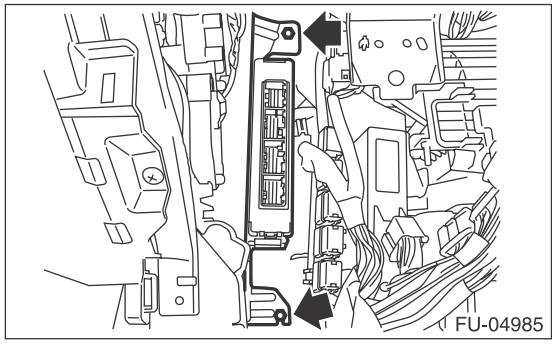

B: INSTALLATION

Install in the reverse order of removal.

CAUTION:
• When the ECM of model with immobilizer has been replaced, be sure to perform the registration of immobilizer system. (Refer to "PC application help for Subaru Select Monitor".)
• If replacing ECM or the bracket, replace both parts with new parts at a time.
• After installing the bracket to ECM, do not separate the bracket.
• If the bracket has been installed to ECM in the wrong direction, replace both parts to new parts.

NOTE:
When replacing the ECM, be careful not to use the wrong spec. ECM to avoid any damage on the fuel injection system.

Tightening torque:
7.5 N·m (0.8 kgf-m, 5.5 ft-lb)

C: INSPECTION

Check that the ECM has no deformation, cracks or other damages.

19.Main Relay

A: REMOVAL

1) Disconnect the ground cable from battery.

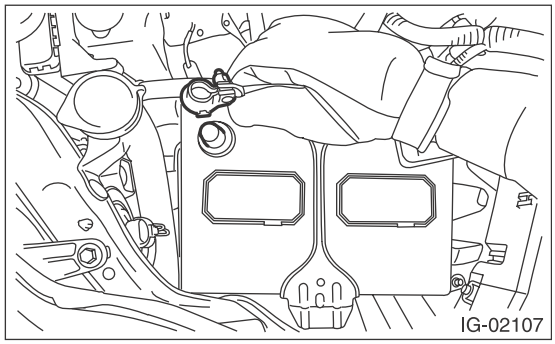

2) Remove the glove box lid assembly. <Ref. to EI-65, REMOVAL, Glove Box.>
3) Remove the main relay from the relay holder.

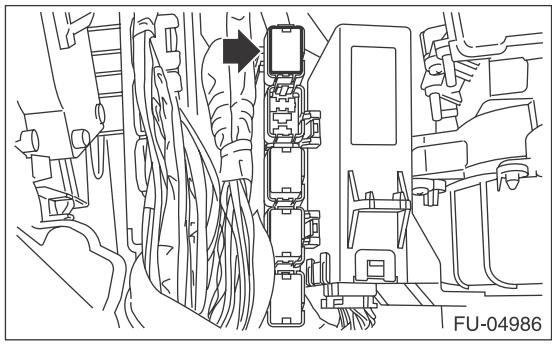

B: INSTALLATION

Install in the reverse order of removal.

C: INSPECTION

1) Check that the main relay has no deformation, cracks or other damages.
2) Measure the resistance between main relay terminals.

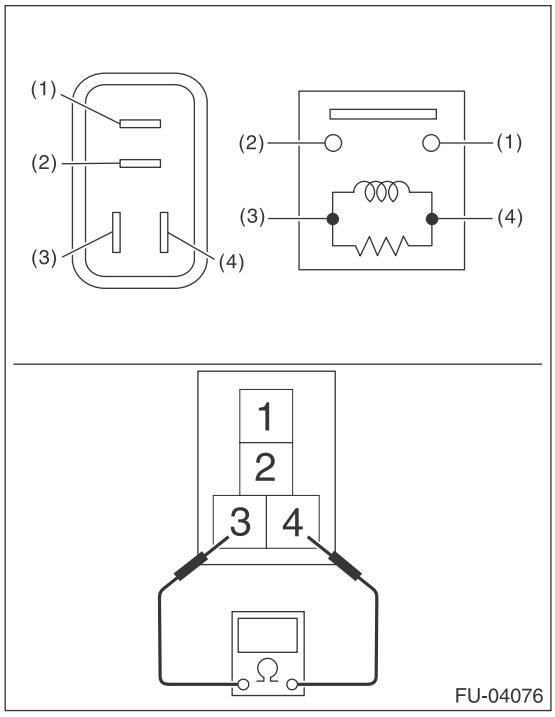

Terminal No.	Standard
1 and 2	1 MΩ or more
3 and 4	130.4 — 230.8 Ω (When 20°C (68°F))

3) Connect battery positive terminal to terminal No. 3 and battery ground terminal to terminal No. 4, and measure the resistance between the main relay terminals.

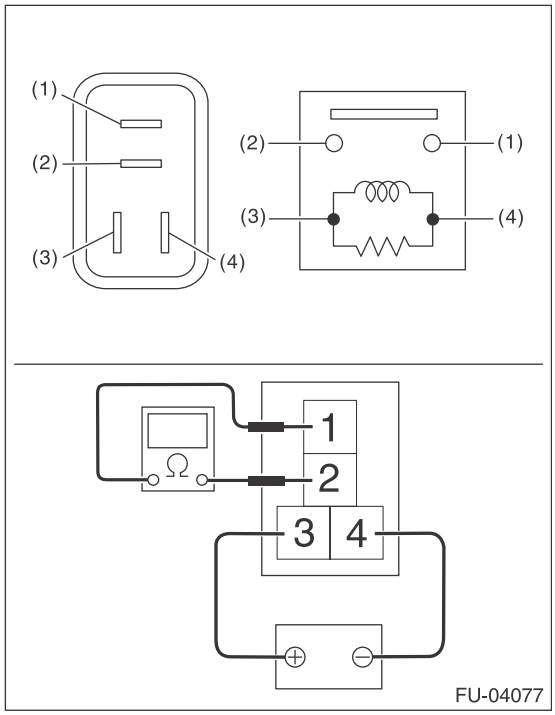

Terminal No.	Standard
1 and 2	Less than 1 Ω

20.Fuel Pump Relay

A: REMOVAL

1) Disconnect the ground cable from battery.

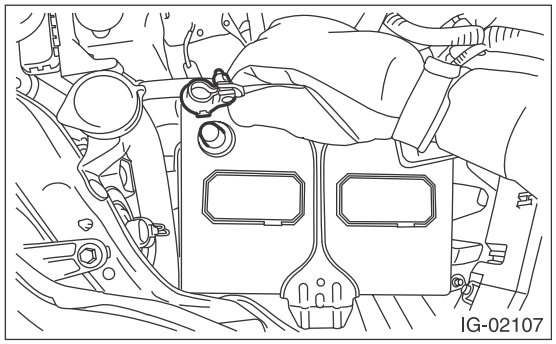

2) Remove the glove box lid assembly. <Ref. to EI-65, REMOVAL, Glove Box.>
3) Remove the fuel pump relay from the relay holder.

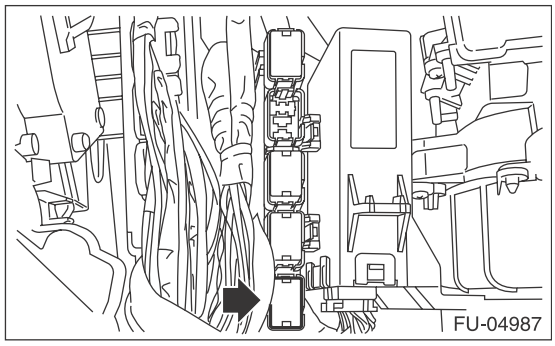

B: INSTALLATION

Install in the reverse order of removal.

C: INSPECTION

1) Check that the fuel pump relay has no deformation, cracks or other damages.
2) Measure the resistance between fuel pump relay terminals.

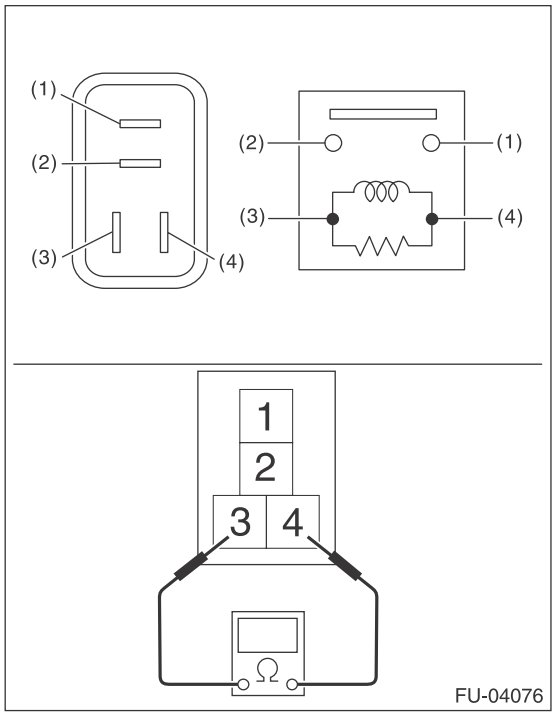

Terminal No.	Standard
1 and 2	1 MΩ or more
3 and 4	93.8 — 136.4 Ω (When 20°C (68°F))

3) Connect battery positive terminal to terminal No. 3 and battery ground terminal to terminal No. 4, and measure the resistance between the fuel pump relay terminals.

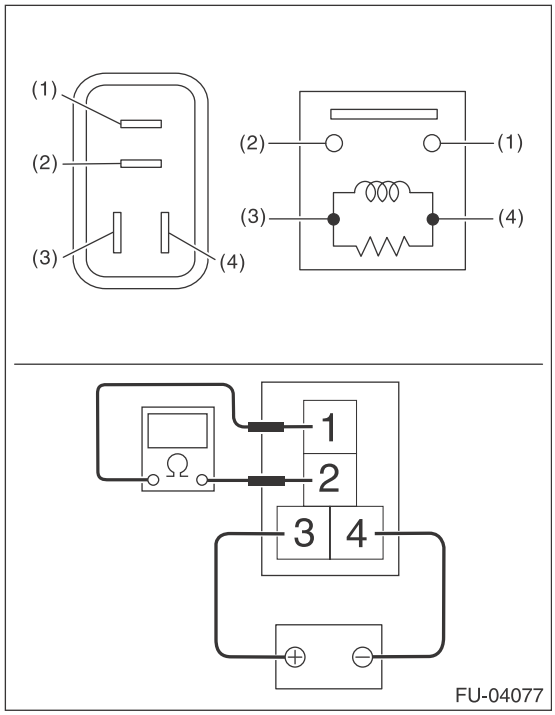

Terminal No.	Standard
1 and 2	Less than 1 Ω

21.Electronic Throttle Control Relay

A: REMOVAL

1) Disconnect the ground cable from battery.

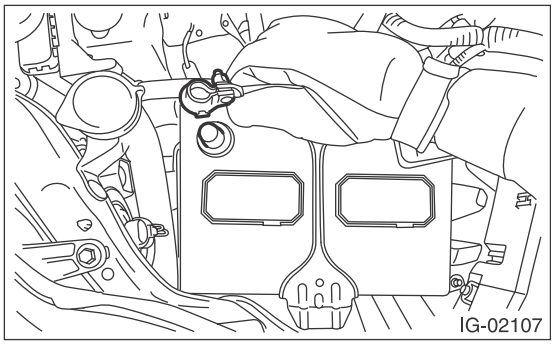

2) Remove the glove box lid assembly. <Ref. to EI-65, REMOVAL, Glove Box.>
3) Remove the electronic throttle control relay from the relay holder.

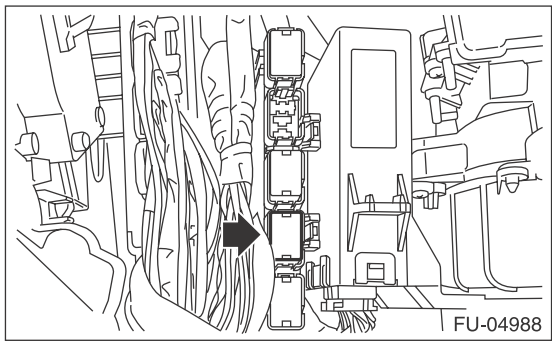

B: INSTALLATION

Install in the reverse order of removal.

C: INSPECTION

1) Check that the electronic throttle control relay has no deformation, cracks or other damages.
2) Measure the resistance between electronic throttle control relay terminals.

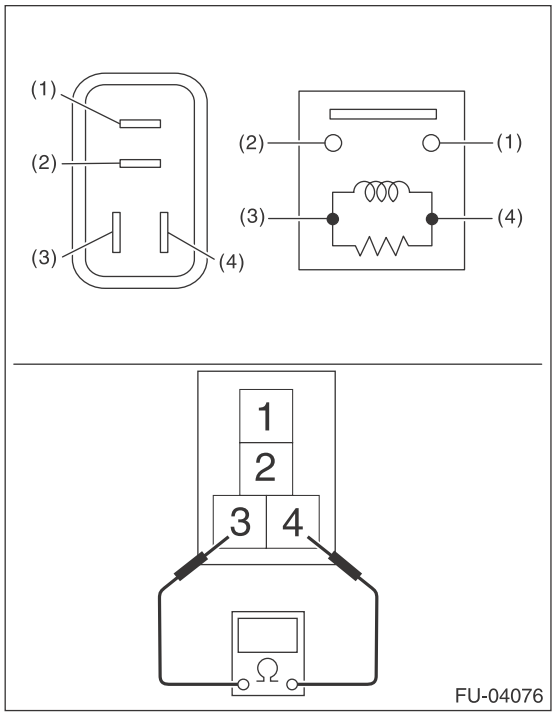

Terminal No.	Standard
1 and 2	1 MΩ or more
3 and 4	93.8 — 136.4 Ω (When 20°C (68°F))

3) Connect battery positive terminal to terminal No. 3 and battery ground terminal to terminal No. 4, and measure the resistance between the electronic throttle control relay terminals.

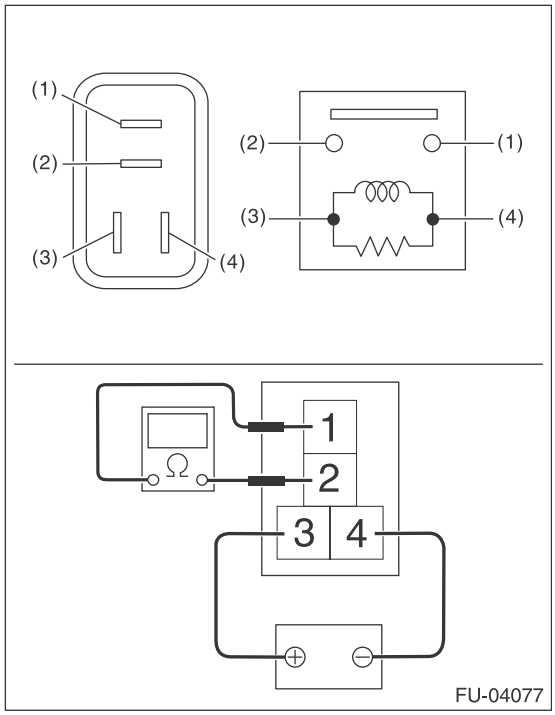

Terminal No.	Standard
1 and 2	Less than 1 Ω

22.Fuel Pump Control Unit

A: REMOVAL

1) Disconnect the ground cable from battery.

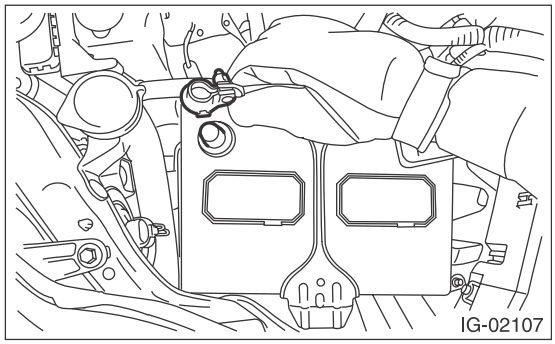

2) Remove the trunk trim panel assembly-side RH. <Ref. to EI-109, REMOVAL, Rear Quarter Trim.>

3) Remove the fuel pump control unit.

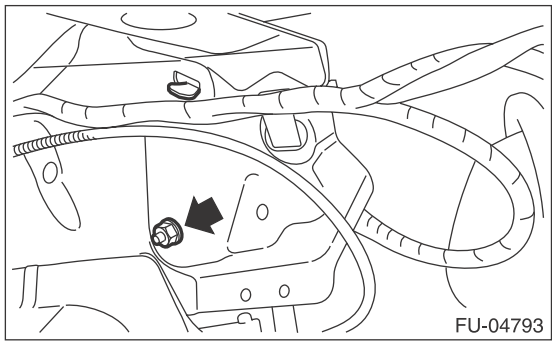

4) Disconnect the connector from fuel pump control unit.

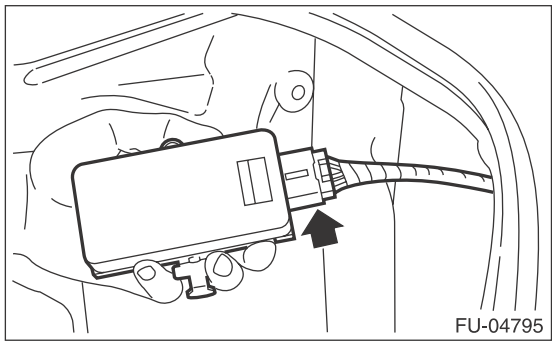

B: INSTALLATION

Install in the reverse order of removal.

Tightening torque:
5 N·m (0.5 kgf-m, 3.7 ft-lb)

C: INSPECTION

Check that the fuel pump control unit has no deformation, cracks or other damages.

23.Fuel

A: PROCEDURE

1. RELEASING OF FUEL PRESSURE

WARNING:
Place “NO OPEN FLAMES” signs near the working area.

CAUTION:
Be careful not to spill fuel.
1) Remove the fuse of fuel pump from main fuse box.

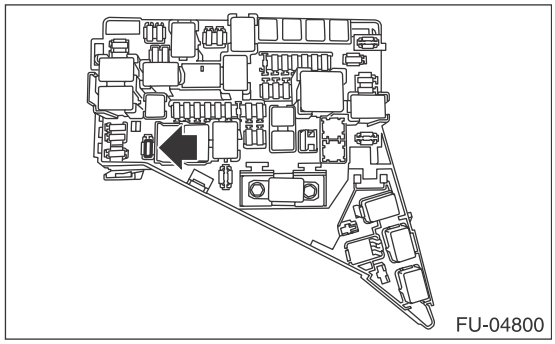

2) Start the engine and run it until it stalls.
3) After the engine stalls, crank it for five more seconds.
4) Turn the ignition switch to OFF.
5) Install the fuse of fuel pump to the main fuse box.

2. DRAINING FUEL (WITH SUBARU SELECT MONITOR)

WARNING:
Place “NO OPEN FLAMES” signs near the working area.

CAUTION:
Be careful not to spill fuel.

NOTE:
• If the fuel pump cannot be driven, refer to the procedures for draining from the fuel filler hose. <Ref. to FU(H4DOTC)-65, DRAINING FUEL (THROUGH THE FUEL FILLER HOSE), PROCEDURE, Fuel.>
• Be careful not to let the battery run-out.
1) Release the fuel pressure. <Ref. to FU(H4DOTC)-65, RELEASING OF FUEL PRESSURE, PROCEDURE, Fuel.>
2) Attach ST to the fuel delivery pipe and push ST in the direction of arrow mark to disconnect the fuel delivery hose.
ST 42099AE000 QUICK CONNECTOR RELEASE

CAUTION:
• Be careful not to spill fuel.
• Catch the fuel from hoses using a container or cloth.

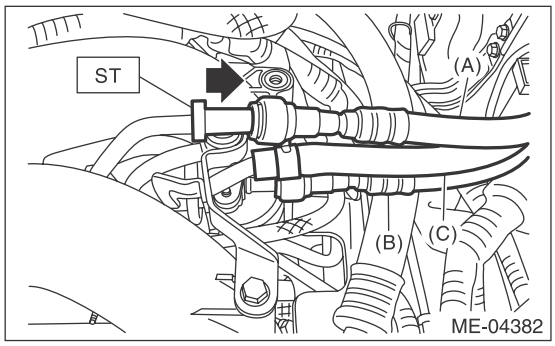

(A) Fuel delivery hose
(B) Fuel return hose
(C) Evaporation hose

3) Connect ST to the fuel delivery hose.
ST 18471AA000 FUEL PIPE ADAPTER
4) Connect the gasoline proof hose to ST and put the end of the hose in the container.
5) Drive the fuel pump and drain the fuel using Subaru Select Monitor. (Refer to “PC application help for Subaru Select Monitor”.)

CAUTION:
Be careful not to spill fuel.
6) Install the related parts in the reverse order after draining the fuel.

3. DRAINING FUEL (THROUGH THE FUEL FILLER HOSE)

WARNING:
Place “NO OPEN FLAMES” signs near the working area.

CAUTION:
• Be careful not to spill fuel.
• Fuel may remain in the fuel filler pipe. Draining the fuel from the fuel filler pipe through the fill opening using the gasoline proof pump and the gasoline proof hose (ø10 or less) before the operation.
1) Lift up the vehicle.
2) Remove the rear exhaust pipe and muffler. <Ref. to EX(H4DOTC)-15, REMOVAL, Rear Exhaust Pipe.> <Ref. to EX(H4DOTC)-16, REMOVAL, Muffler.>
3) Remove the rear sub frame. <Ref. to RS-17, REMOVAL, Rear Sub Frame.>
4) Open the fuel filler lid and remove the fuel filler cap.
5) Drain the fuel from the fuel filler pipe through the filler opening using the gasoline proof pump and the gasoline proof hose (ø10 or less).
6) Disconnect the fuel filler hose from the fuel filler pipe assembly.

CAUTION:
- **Be careful not to spill fuel.**
- **Catch the fuel from hoses using a container or cloth.**

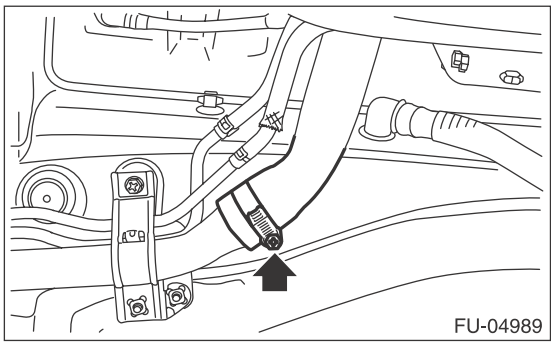

7) Set the container under the vehicle and insert the gasoline proof hose (ø10 or less) into the fuel filler hose to drain the fuel.

CAUTION:
Be careful not to spill fuel.

8) Install the related parts in the reverse order after draining the fuel.

Tightening torque:
2.5 N·m (0.3 kgf-m, 1.8 ft-lb)

24.Fuel Tank

A: REMOVAL

WARNING:
Place “NO OPEN FLAMES” signs near the working area.

CAUTION:
Be careful not to spill fuel.

1) Release the fuel pressure. <Ref. to FU(H4DOTC)-65, RELEASING OF FUEL PRESSURE, PROCEDURE, Fuel.>
2) Drain fuel. <Ref. to FU(H4DOTC)-65, DRAINING FUEL (WITH SUBARU SELECT MONITOR), PROCEDURE, Fuel.>
3) Disconnect the ground cable from battery.

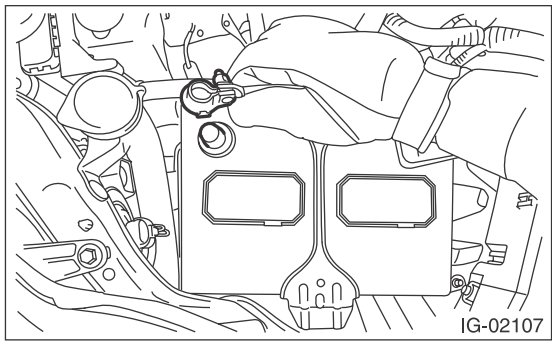

4) Remove the rear seat cushion. <Ref. to SE-32, REMOVAL, Rear Seat.>
5) Remove the clips (A) and seat cushion hooks (B), and turn over the floor mat (C).

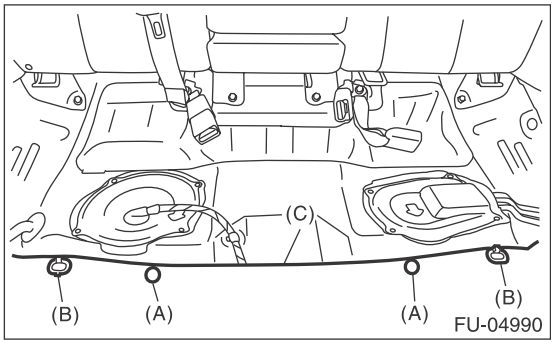

6) Remove the service hole cover of fuel pump.
(1) Disconnect the fuel cord connector (A), and remove the clip (B).
(2) Remove the screw (C).
(3) Push the grommet (D) down and remove the service hole cover.

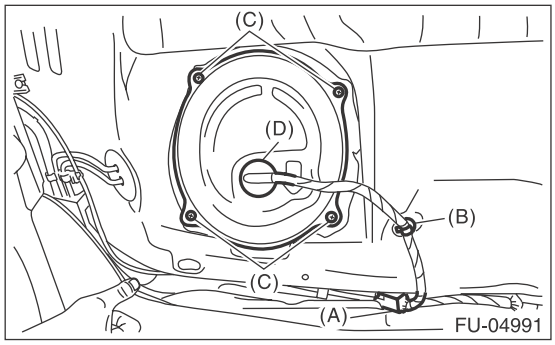

7) Remove the service hole cover of fuel sub level sensor.

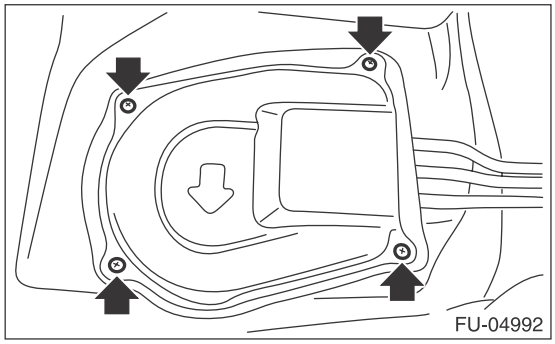

8) Disconnect the quick connector of fuel delivery tube (A) and fuel return tube (B). <Ref. to FU(H4DOTC)-87, REMOVAL, Fuel Delivery, Return and Evaporation Lines.>

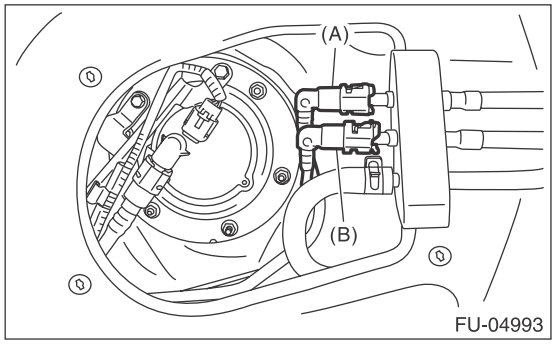

9) Remove the rear wheels.
10) Lift up the vehicle.
11) Remove the rear ABS wheel speed sensor from the rear housing.

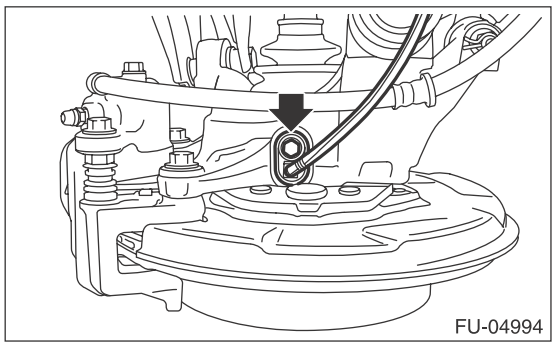

12) Remove the rear ABS wheel speed sensor harness bracket from the upper arm.

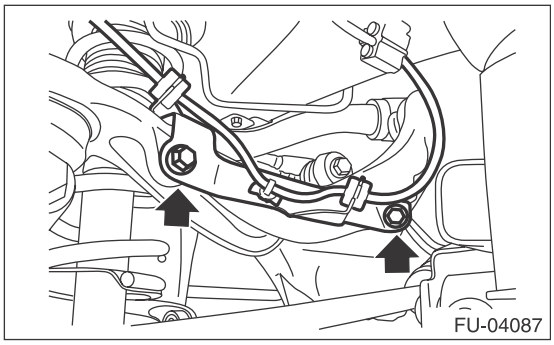

13) Remove the rear brake hose bracket from rear housing.

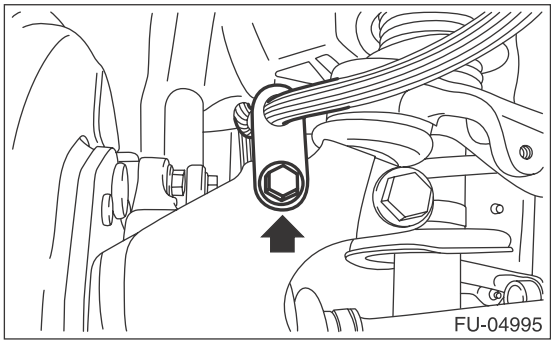

14) Remove the rear disc brake assembly and tie it to the body side of the vehicle.

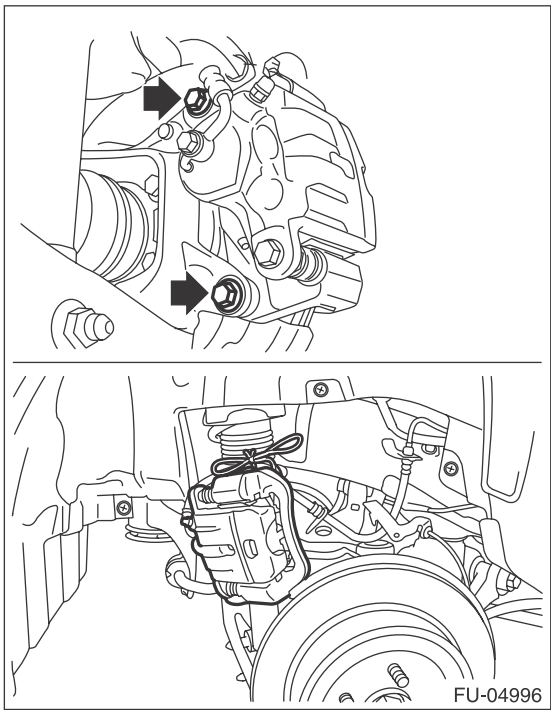

15) Remove the parking brake cable from parking brake assembly. <Ref. to PB-6, REMOVAL, Parking Brake Assembly (Rear Disc Brake).>

16) Remove the rear exhaust pipe and muffler. <Ref. to EX(H4DOTC)-15, REMOVAL, Rear Exhaust Pipe.> <Ref. to EX(H4DOTC)-16, REMOVAL, Muffler.>

17) Remove the propeller shaft. <Ref. to DS-10, REMOVAL, Propeller Shaft.>

18) Remove the clip (A) securing the fuel tank protector and heat shield cover.

19) Remove the bolts (B) and nuts (C) securing the fuel tank protector, and remove the fuel tank protector.

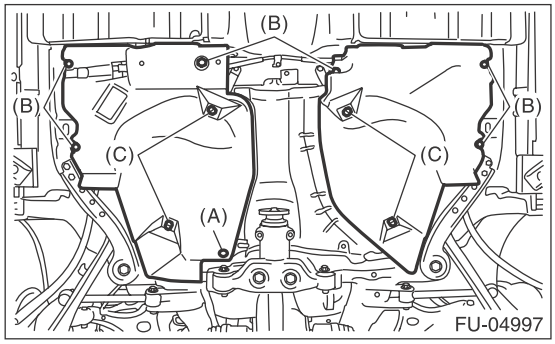

20) Remove the bolts and nuts securing the heat shield cover and remove the heat shield cover.

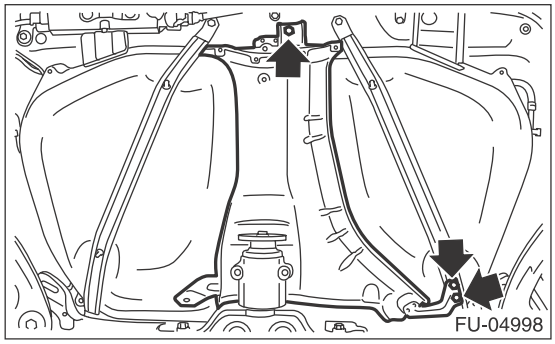

21) Remove the rear suspension assembly.

WARNING:
A helper is required to perform this work.

(1) Support the rear differential with the transmission jack.

(2) Remove the bolt and nut which secure rear shock absorber to rear suspension arm.

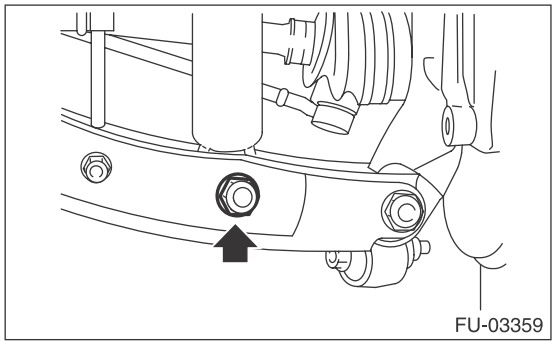

(3) Remove the bolts which secure the rear suspension assembly to the body.

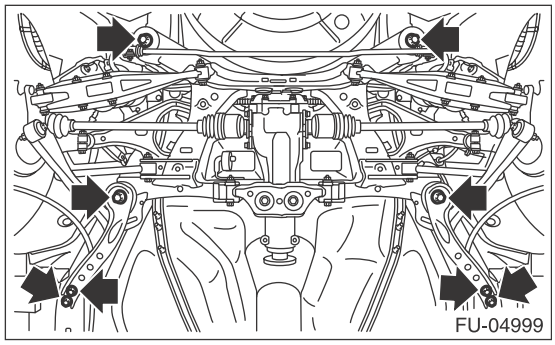

(4) Remove the rear suspension assembly.

22) Disconnect the PCV drain hose (A) and PCV outlet hose (B) from the pressure control solenoid valve.

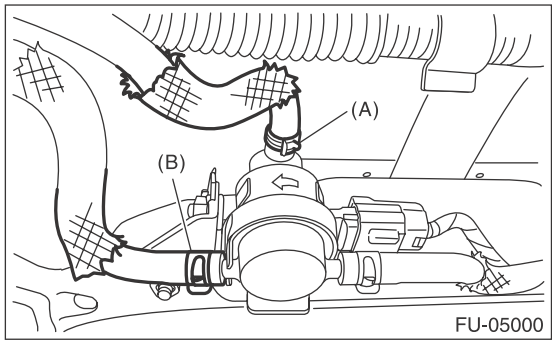

23) Disconnect the air vent hose from the fuel tank.

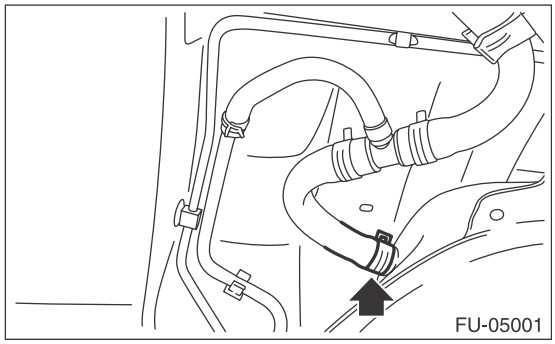

24) Disconnect the quick connector of the circulate tube from evaporation pipe.

NOTE:
Disconnect the quick connector as shown in the figure.

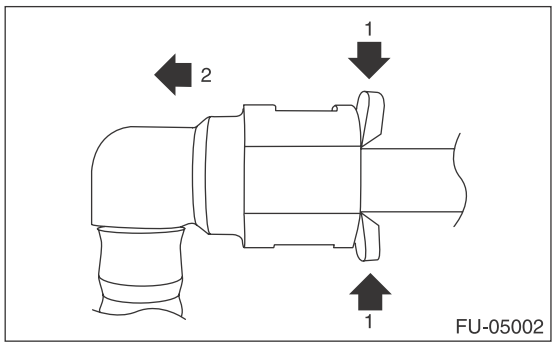

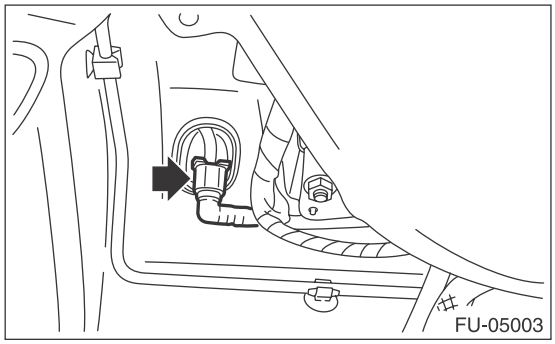

25) Disconnect the fuel filler hose (A), PCV inlet hose (B) and circulate hose (C) from the fuel filler pipe assembly.

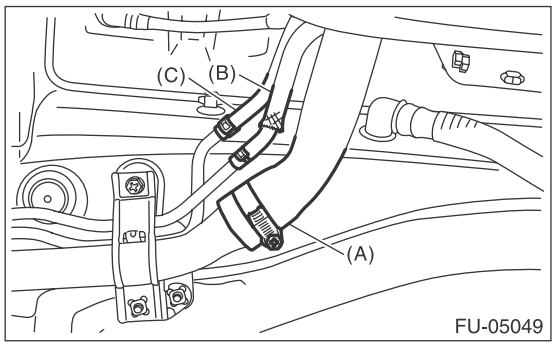

26) Support the fuel tank with a transmission jack, remove the bolts from the fuel tank band, and remove the fuel tank from the vehicle.

WARNING:
- **A helper is required to perform this work.**

• Fuel may remain in the fuel tank. This will cause the left and right sides to be unbalanced. Be careful not to drop the fuel tank when removing.

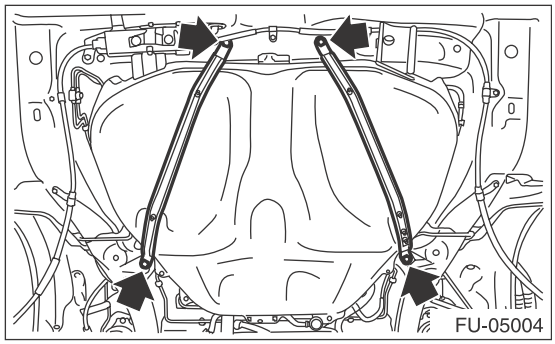

B: INSTALLATION

1) Support the fuel tank with a transmission jack, set the fuel tank in place, and temporarily tighten the bolts of the fuel tank band.

WARNING:
A helper is required to perform this work.

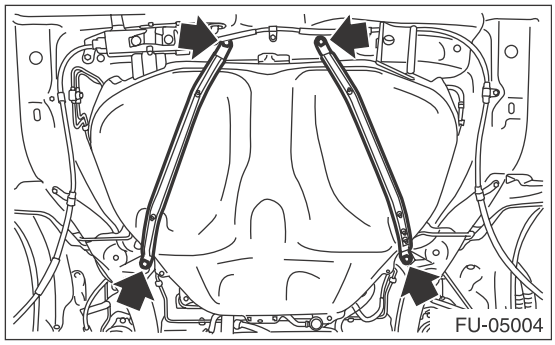

2) Securely insert the fuel filler hose (A), PCV inlet hose (B) and circulate hose (C) to the spool or stopper, then attach the clamp or clip as shown in the figure.

Tightening torque:
2.5 N·m (0.3 kgf-m, 1.8 ft-lb)

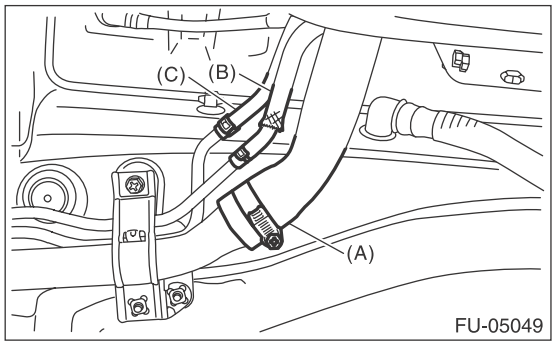

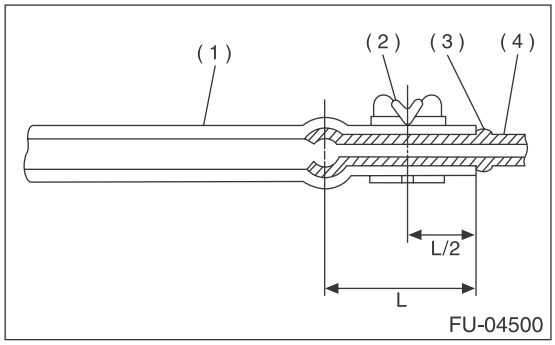

(1) Hose
(2) Clamp or clip
(3) Spool or stopper
(4) Pipe

3) Connect the quick connector of the circulate tube to the evaporation pipe as shown in the figure.

CAUTION:
• Check that there is no damage or dust on the quick connector. If necessary, clean the seal surface of the pipe.

• **Make sure that the quick connector is securely connected.**

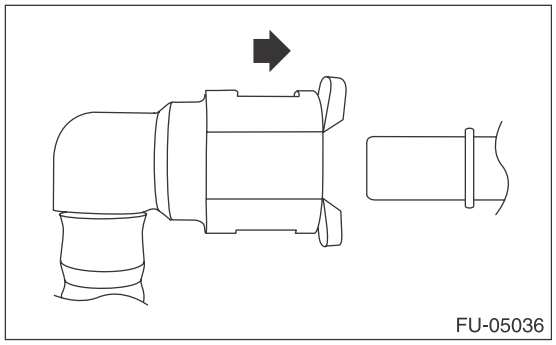

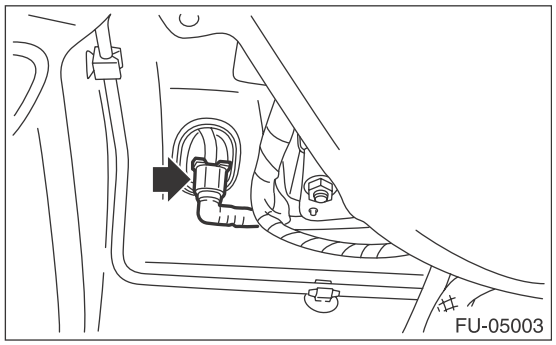

4) Connect the air vent hose to fuel tank.

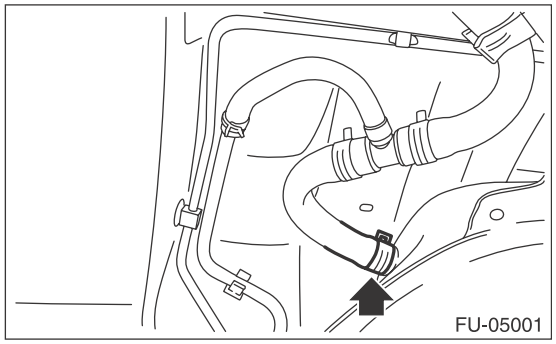

5) Connect the PCV drain hose (A) and PCV outlet hose (B) to the pressure control solenoid valve.

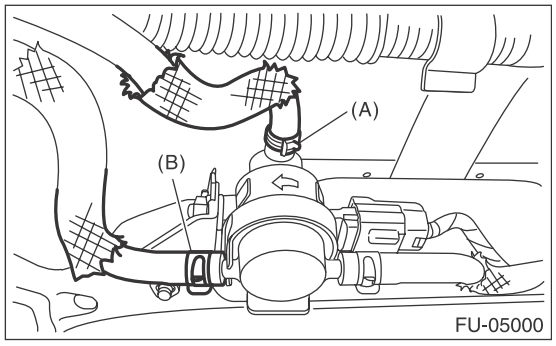

6) Tighten the bolts of the fuel tank band in the order shown in the figure.

Tightening torque:
33 N·m (3.4 kgf-m, 24.3 ft-lb)

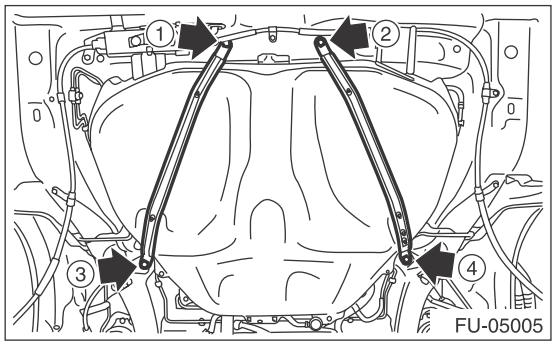

7) Install the rear suspension assembly.

WARNING:
A helper is required to perform this work.

(1) Support the rear differential with the transmission jack.
(2) While supporting the rear suspension assembly, install the rear suspension assembly to the body.

Tightening torque:
T1: 70 N·m (7.1 kgf-m, 51.6 ft-lb)
T2: 200 N·m (20.4 kgf-m, 147.5 ft-lb)

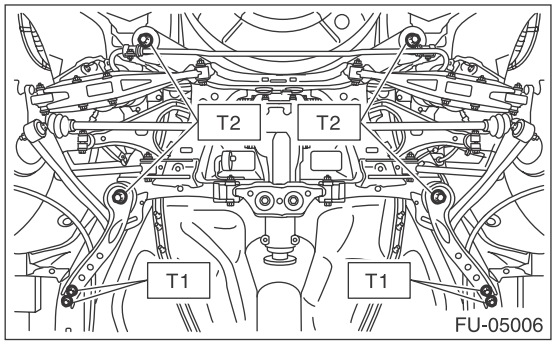

(3) Install the rear shock absorber to the rear suspension arm.

NOTE:
Use a new self-locking nut.

Tightening torque:
120 N·m (12.2 kgf-m, 88.5 ft-lb)

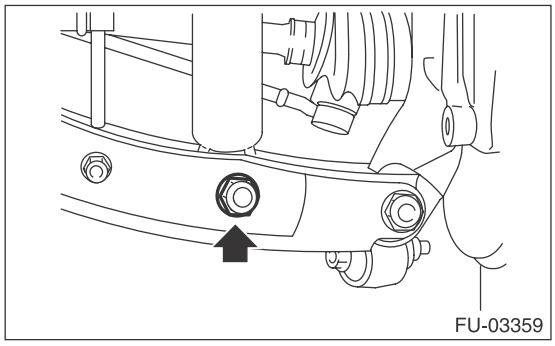

8) Install the heat shield cover.

Tightening torque:
18 N·m (1.8 kgf-m, 13.3 ft-lb)

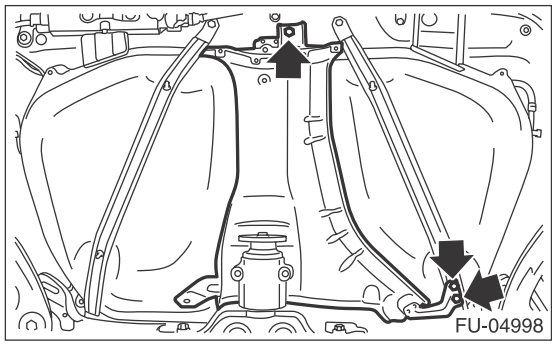

9) Install the bolts (B) and nuts (C) securing the fuel tank protector and install the clip (A) securing the fuel tank protector and heat shield cover.

Tightening torque:
Nut (C): 9 N·m (0.9 kgf-m, 6.6 ft-lb)
Bolt (B): 18 N·m (1.8 kgf-m, 13.3 ft-lb)

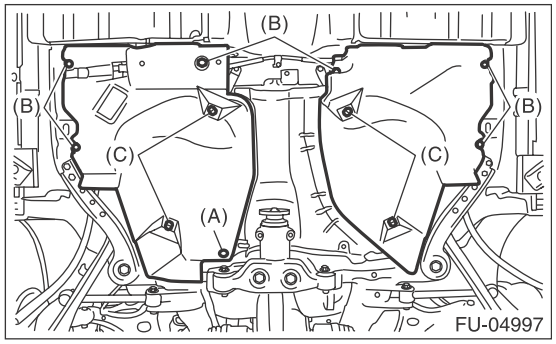

10) Install the propeller shaft. <Ref. to DS-10, INSTALLATION, Propeller Shaft.>
11) Install the rear exhaust pipe and muffler. <Ref. to EX(H4DOTC)-15, INSTALLATION, Rear Exhaust Pipe.> <Ref. to EX(H4DOTC)-16, INSTALLATION, Muffler.>
12) Lower the vehicle.
13) Connect the parking brake cable to the parking brake assembly. <Ref. to PB-7, INSTALLATION, Parking Brake Assembly (Rear Disc Brake).>
14) Install the rear disc brake assembly.

Tightening torque:
66 N·m (6.7 kgf-m, 48.7 ft-lb)

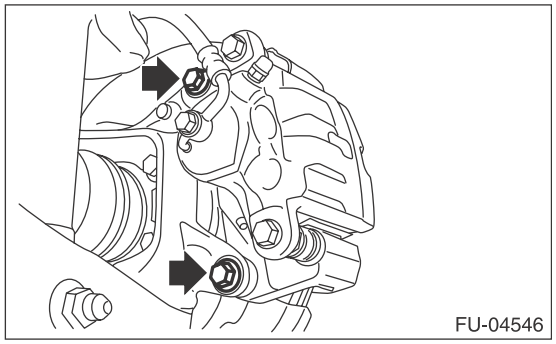

15) Install the rear brake hose bracket to the rear housing.

Tightening torque:
33 N·m (3.4 kgf-m, 24.3 ft-lb)

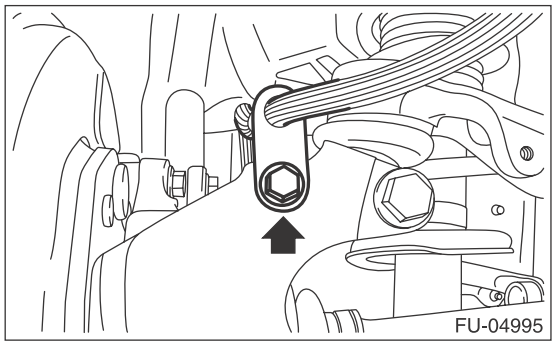

16) Install the rear ABS wheel speed sensor harness bracket to the upper arm.

Tightening torque:
7.5 N·m (0.8 kgf-m, 5.5 ft-lb)

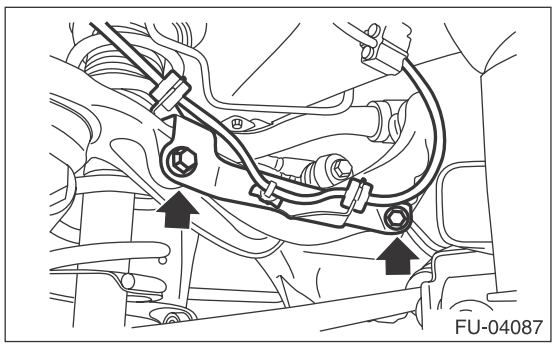

17) Install the rear ABS wheel speed sensor to the rear housing.

Tightening torque:
7.5 N·m (0.8 kgf-m, 5.5 ft-lb)

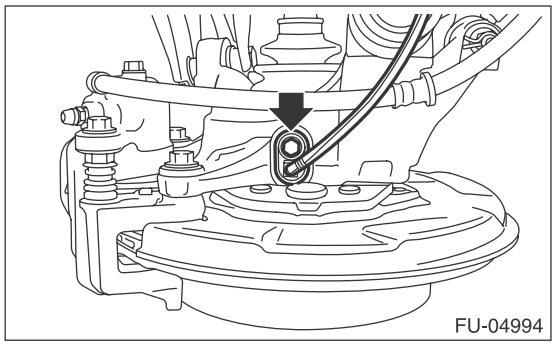

18) Install the rear wheels.

Tightening torque:
120 N·m (12.2 kgf-m, 88.5 ft-lb)

19) Connect the quick connector of fuel delivery tube (A) and fuel return tube (B). <Ref. to FU(H4DOTC)-89, INSTALLATION, Fuel Delivery, Return and Evaporation Lines.>

NOTE:
When connecting, be careful not to reverse the delivery side and return side.

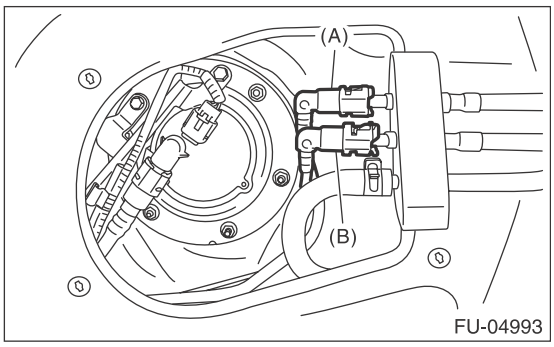

20) Install the service hole cover of fuel sub level sensor.

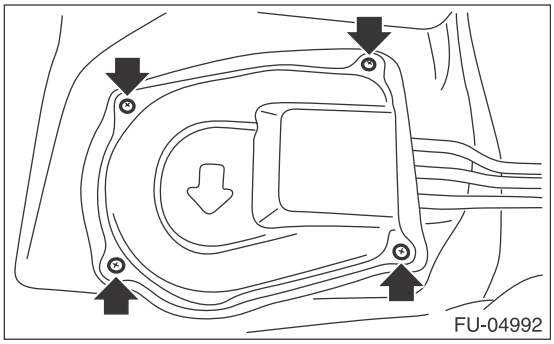

21) Install the service hole cover of the fuel pump, and install the connector and clip.

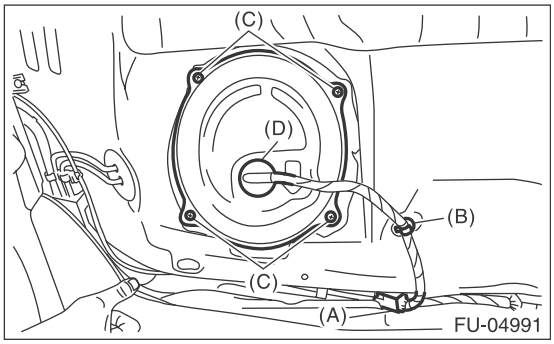

(A) Connector
(B) Clip
(C) Screw
(D) Grommet

22) Set the floor mat (C), and install clips (A) and seat cushion hooks (B).

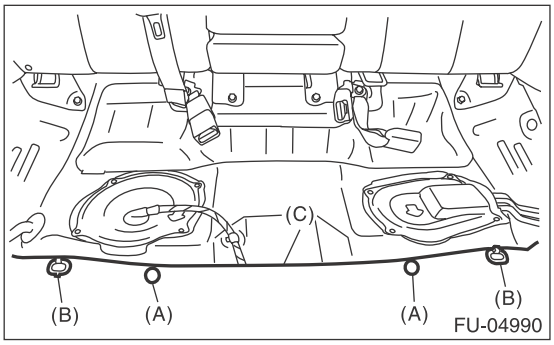

23) Install the rear seat cushion. <Ref. to SE-47, INSTALLATION, Rear Seat.>
24) Connect the ground cable to battery.

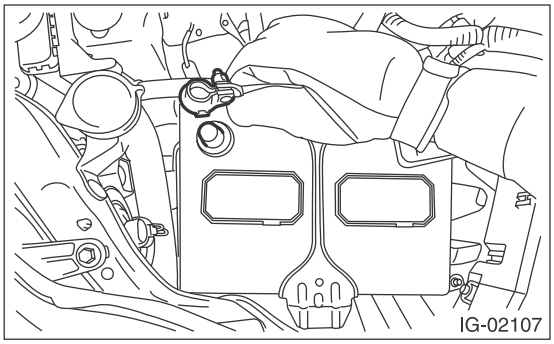

25) Inspect the wheel alignment and adjust if necessary.

C: INSPECTION

1) Check that the fuel tank and fuel pipe have no deformation, cracks and other damages.
2) Check that the fuel hose has no cracks, damage or loose part.

25.Fuel Filler Pipe

A: REMOVAL

WARNING:
Place “NO OPEN FLAMES” signs near the working area.

CAUTION:
Be careful not to spill fuel.

1) Release the fuel pressure. <Ref. to FU(H4DOTC)-65, RELEASING OF FUEL PRESSURE, PROCEDURE, Fuel.>
2) Drain fuel. <Ref. to FU(H4DOTC)-65, DRAINING FUEL (WITH SUBARU SELECT MONITOR), PROCEDURE, Fuel.>
3) Disconnect the ground cable from battery.

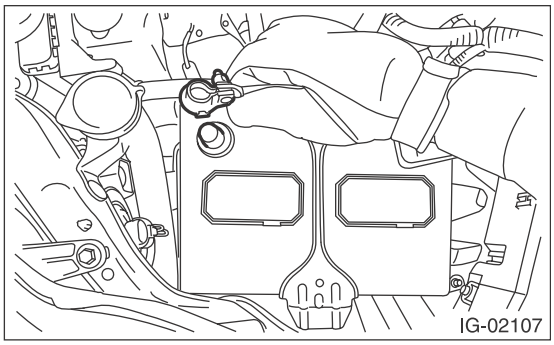

4) Open the fuel filler lid, and remove the filler cap.
5) Turn the fuel filler pipe protector in the direction of the arrow to unlock and remove it.

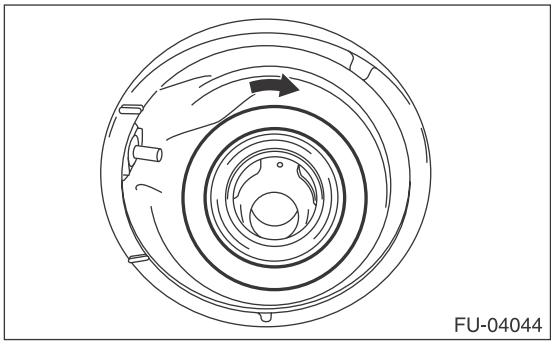

6) Remove the rear wheel RH.
7) Lift up the vehicle.
8) Remove the rear mud guard RH. <Ref. to EI-38, REMOVAL, Mud Guard.>
9) Remove the rear sub frame. <Ref. to RS-17, REMOVAL, Rear Sub Frame.>
10) Disconnect the fuel filler hose (A), PCV inlet hose (B) and circulate hose (C) from the fuel filler pipe assembly.

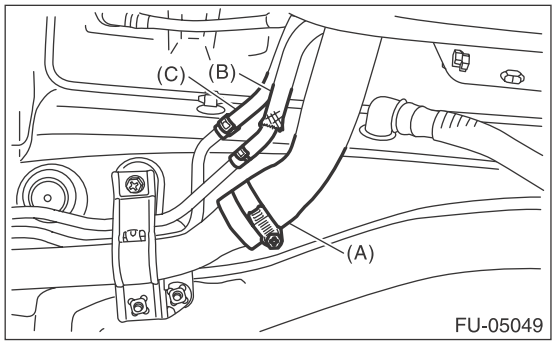

11) Disconnect the evaporation hose (A) from fuel filler pipe assembly and remove the bolts and nuts securing the fuel filler pipe assembly to the vehicle body.

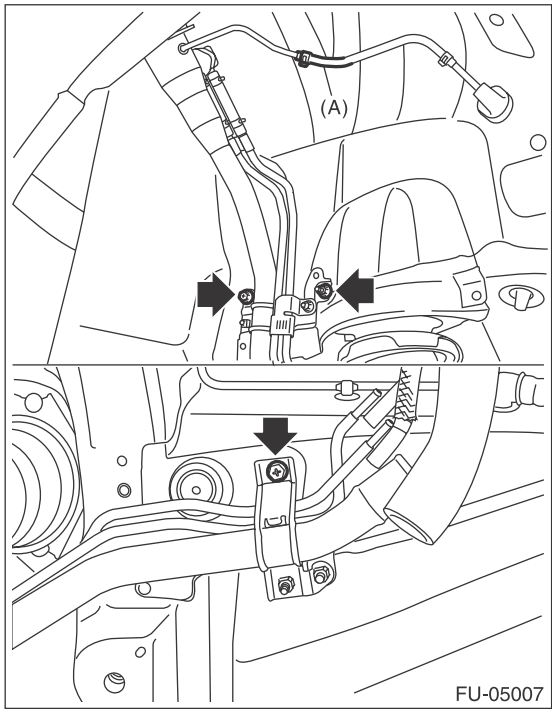

12) Remove the fuel filler pipe assembly from the underside of the vehicle.

B: INSTALLATION

1) Open the fuel filler lid.
2) Insert the fuel filler pipe assembly into the rubber saucer from inside of the rear fender.
3) Install the fuel filler pipe assembly to the vehicle body and connect the evaporation hose (A) to the fuel filler pipe assembly.

Tightening torque:
7.5 N·m (0.8 kgf-m, 5.5 ft-lb)

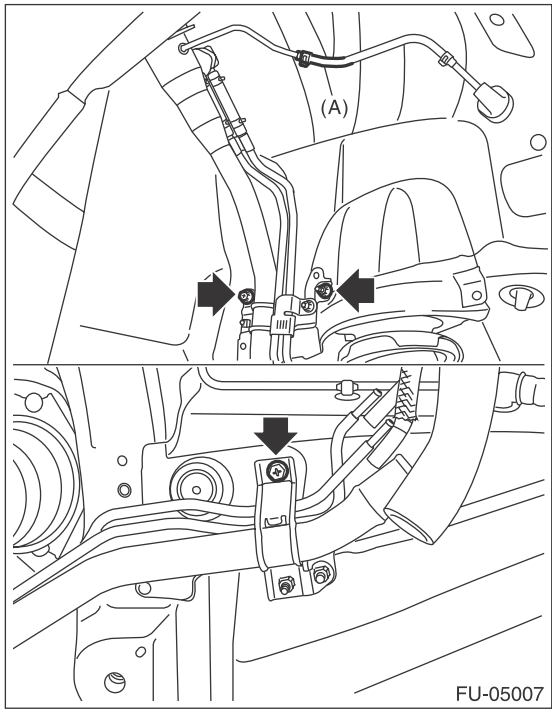

4) Align the cutout on the fuel filler pipe protector and the protrusion of the neck holder and insert them all the way, and then turn the fuel filler pipe protector in the direction of the arrow until it is locked.

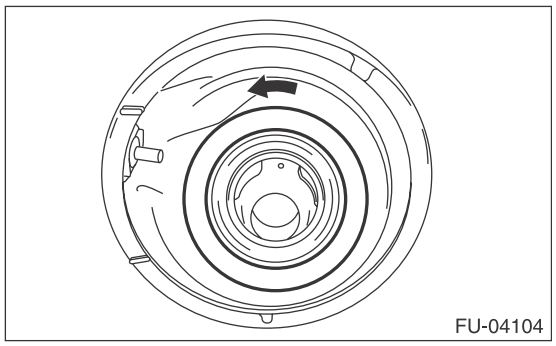

5) Securely insert the fuel filler hose (A), PCV inlet hose (B) and circulate hose (C) to the spool or stopper, then attach the clamp or clip as shown in the figure.

Tightening torque:
2.5 N·m (0.3 kgf-m, 1.8 ft-lb)

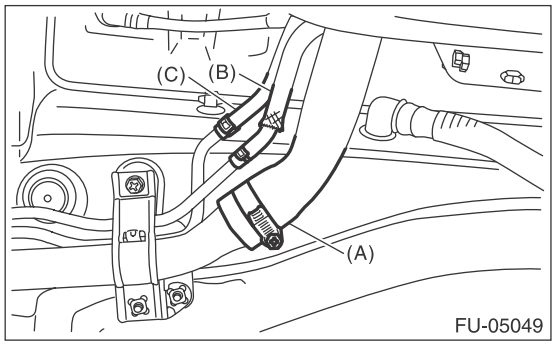

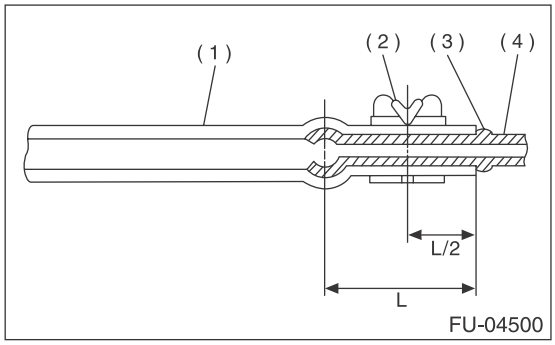

(1) Hose
(2) Clamp or clip
(3) Spool or stopper
(4) Pipe

6) Install the rear sub frame. <Ref. to RS-18, INSTALLATION, Rear Sub Frame.>
7) Install the rear mud guard RH. <Ref. to EI-38, INSTALLATION, Mud Guard.>
8) Lower the vehicle.
9) Install the rear wheel RH.

Tightening torque:
120 N·m (12.2 kgf-m, 88.5 ft-lb)

10) Connect the ground cable to battery.

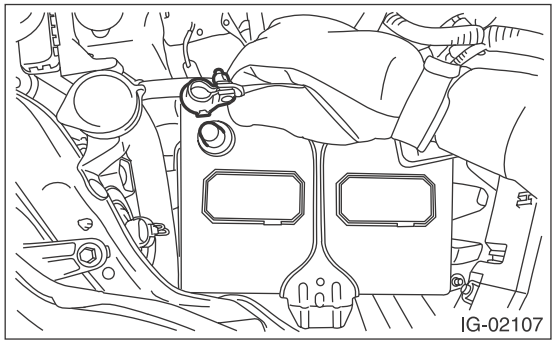

11) Inspect the wheel alignment and adjust if necessary.

C: DISASSEMBLY

1) Remove the shut valve from the fuel filler pipe. <Ref. to EC(H4DOTC)-21, REMOVAL, Shut Valve.>
2) Remove the evaporation pipe from the fuel filler pipe.

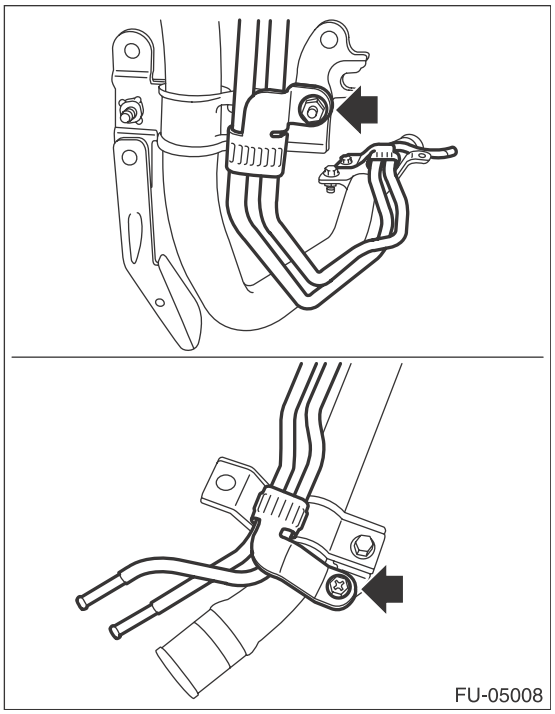

3) Remove the fuel filler pipe bracket from the fuel filler pipe.

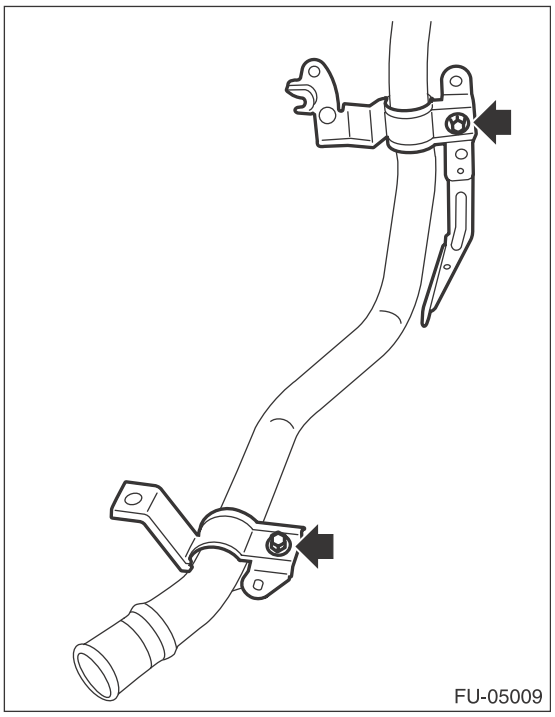

D: ASSEMBLY

1) Temporarily tighten the bolts securing the fuel filler pipe bracket to the fuel filler pipe.

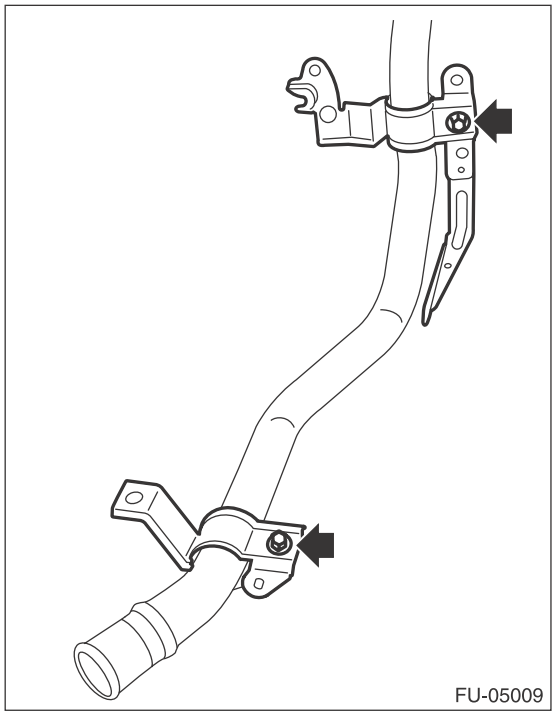

2) Install the evaporation pipe to the fuel filler pipe.

Tightening torque:
7.5 N·m (0.8 kgf-m, 5.5 ft-lb)

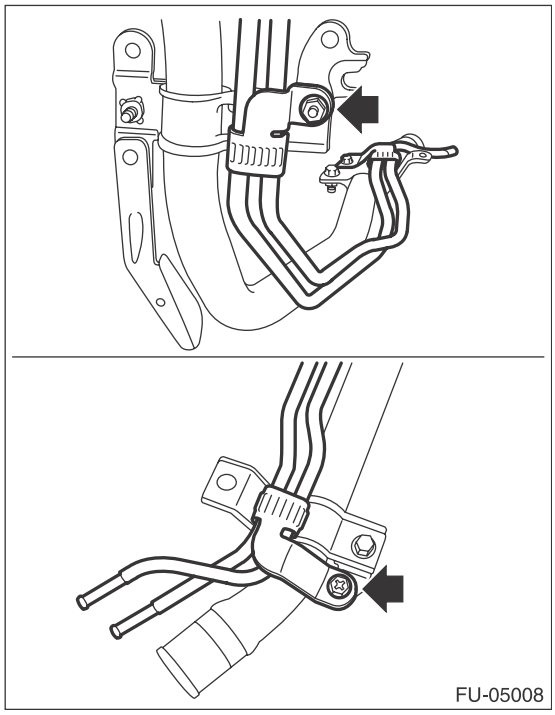

3) Tighten the bolts securing the fuel filler pipe bracket to the fuel filler pipe.

Tightening torque:
7.35 N·m (0.7 kgf-m, 5.4 ft-lb)

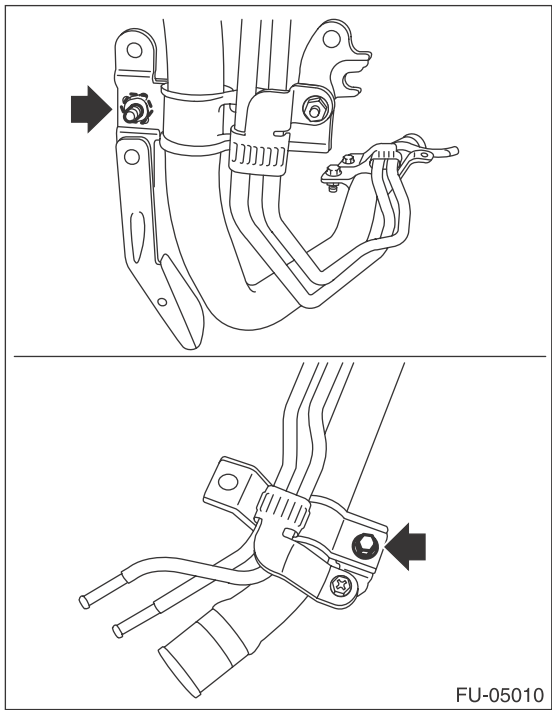

4) Install the shut valve to the fuel filler pipe. <Ref. to EC(H4DOTC)-21, INSTALLATION, Shut Valve.>

E: INSPECTION

1) Check that the fuel filler pipe and evaporation pipe do not have deformation, cracks or other damages.
2) Check that the hose has no cracks, damage or loose part.

26.Fuel Pump

A: REMOVAL

WARNING:
Place “NO OPEN FLAMES” signs near the working area.

CAUTION:
- **Be careful not to spill fuel.**
- **If the fuel gauge indicates that two thirds or more of the fuel is remaining, be sure to drain fuel before starting work to avoid the fuel to spill.**

NOTE:
Fuel pump assembly consists of fuel pump, fuel filter, fuel chamber and fuel level sensor.

1) Release the fuel pressure. <Ref. to FU(H4DOTC)-65, RELEASING OF FUEL PRESSURE, PROCEDURE, Fuel.>
2) Drain fuel. <Ref. to FU(H4DOTC)-65, DRAINING FUEL (WITH SUBARU SELECT MONITOR), PROCEDURE, Fuel.>
3) Disconnect the ground cable from battery.

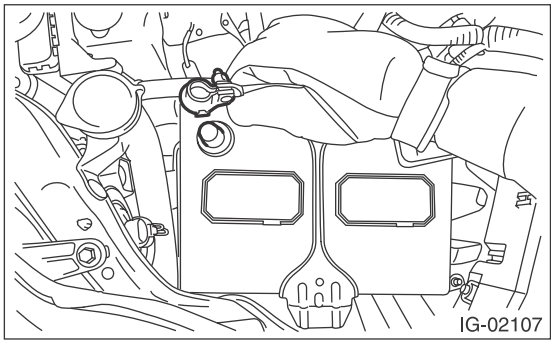

4) Remove the rear seat cushion. <Ref. to SE-32, REMOVAL, Rear Seat.>
5) Remove the clips (A) and seat cushion hooks (B), and turn over the floor mat (C).

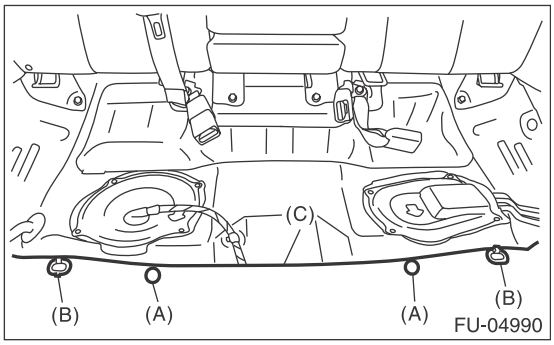

6) Remove the service hole cover.
(1) Disconnect the fuel cord connector (A), and remove the clip (B).
(2) Remove the screw (C).
(3) Push the grommet (D) down and remove the service hole cover.

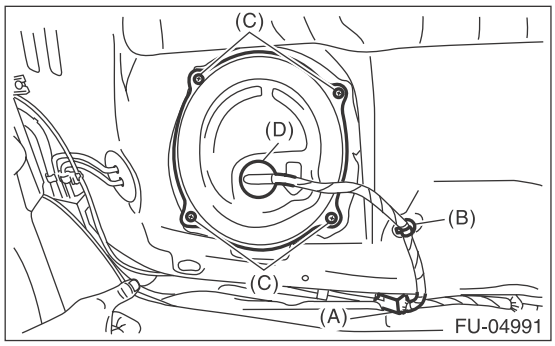

7) Disconnect the connector (A) from fuel pump, and remove the clip (B) securing the harness.
8) Disconnect the quick connector of fuel delivery tube (C), fuel return tube (D) and fuel sub delivery tube (E). <Ref. to FU(H4DOTC)-87, REMOVAL, Fuel Delivery, Return and Evaporation Lines.>
9) Remove the rubber cap (F) from nut.

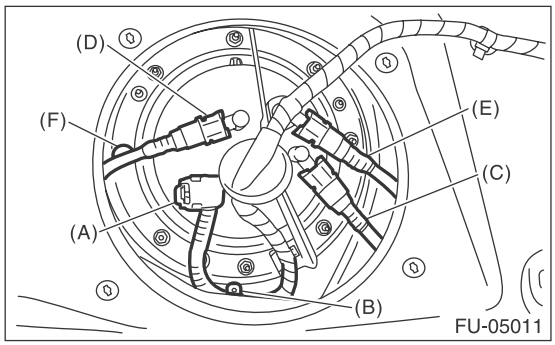

10) Remove the nuts securing the fuel pump upper plate to the fuel tank and remove the fuel pump upper plate.

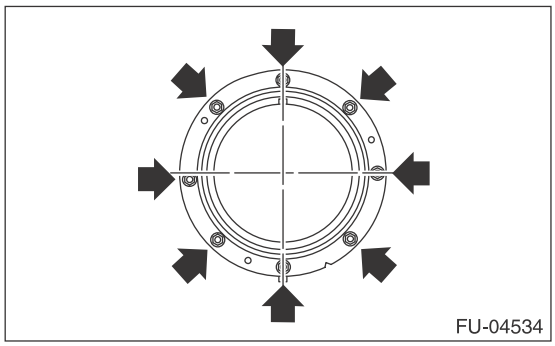

11) Remove the fuel pump assembly from the fuel tank.

B: INSTALLATION

Install in the reverse order of removal while being careful of the following.

- Make sure the sealing portion is free from fuel or foreign matter before installation.
- Align protrusion (A) of the gasket to the position shown in the figure.
- Insert the protrusion (B) of gasket to the fuel pump upper plate. (3 places)
- Align the protrusion (C) of fuel pump assembly with the cutout on the fuel pump upper plate.
- Tighten the nuts to the specified torque in the order as shown in the figure.
- After assembly, install the rubber cap (D) to the position shown in the figure.

NOTE:

- Use a new gasket and retainer.
- Do not forget to install the rubber cap (D).

Tightening torque:
4.4 N·m (0.4 kgf-m, 3.2 ft-lb)

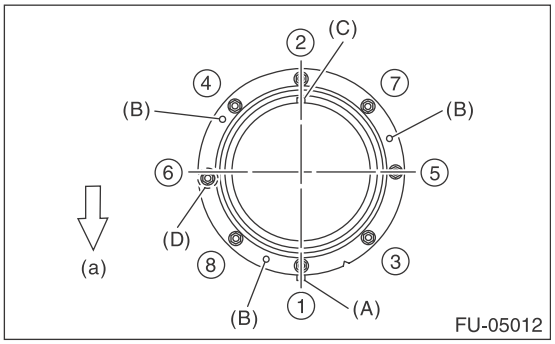

(a) Front side of vehicle

C: INSPECTION

1) Check that the fuel pump has no deformation, cracks or other damages.
2) Connect battery positive terminal to terminal No. 5 and battery ground terminal to terminal No. 6, and inspect the fuel pump operation.

WARNING:

- **Wipe off fuel completely.**
- **Keep the battery as far apart from fuel pump as possible.**
- **Do not run the fuel pump for a long time under non-load condition.**

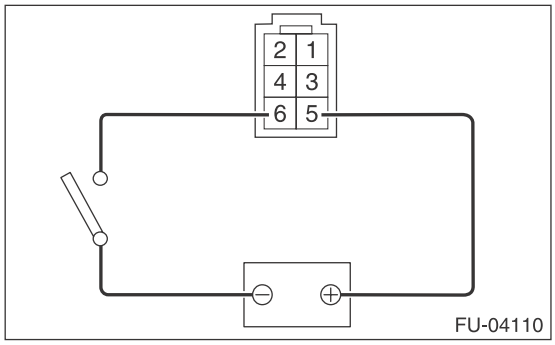

27.Fuel Level Sensor

A: REMOVAL

WARNING:
Place “NO OPEN FLAMES” signs near the working area.

CAUTION:
- **Be careful not to spill fuel.**
- **If the fuel gauge indicates that two thirds or more of the fuel is remaining, be sure to drain fuel before starting work to avoid the fuel to spill.**

NOTE:
The fuel level sensor is built in fuel pump assembly.
1) Remove the fuel pump assembly. <Ref. to FU(H4DOTC)-78, REMOVAL, Fuel Pump.>
2) Disconnect the connector from the fuel filter assembly.

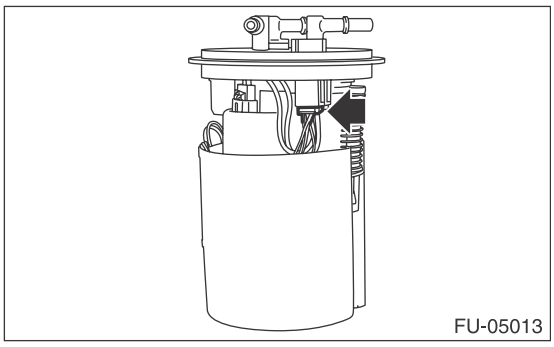
FU-05013

3) Remove the harness from the hooks (A) on the fuel chamber assembly and remove the fuel temperature sensor (B) from fuel chamber assembly.

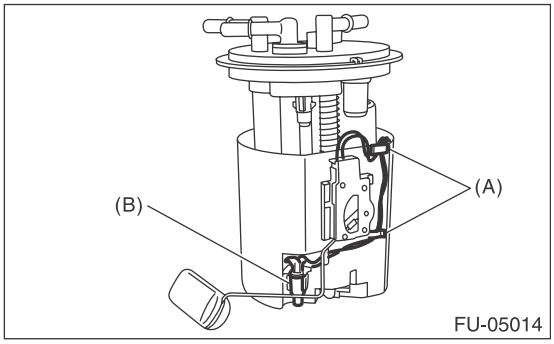

FU-05014

4) Press two claws (A) of the fuel level sensor, and slide the fuel level sensor in the direction of the arrow to remove the fuel level sensor.

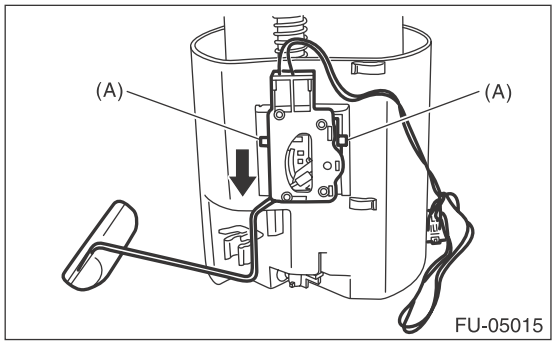

FU-05015

B: INSTALLATION

Install in the reverse order of removal.

C: INSPECTION

1) Check that the fuel level sensor has no damage.
2) Measure the fuel level sensor float position.

NOTE:
When inspecting the fuel level sensor, perform the work with the sensor installed to the fuel pump.
- Model with fuel level sensor bent in 3 locations

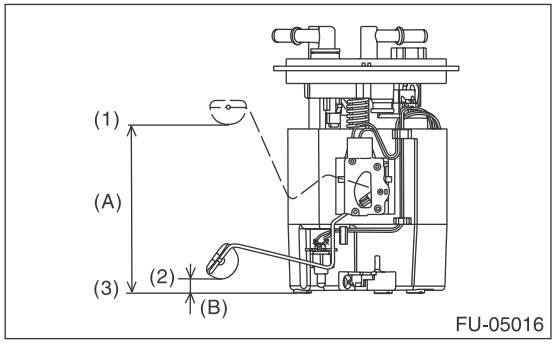

FU-05016

(1) FULL
(2) EMPTY
(3) Fuel tank seating surface

Float position	Standard
FULL to Fuel tank seating surface (A)	126.4±4 mm (4.976±0.157 in)
EMPTY to Fuel tank seating surface (B)	11.0±4 mm (0.433±0.157 in)

• Model with fuel level sensor bent in 2 locations

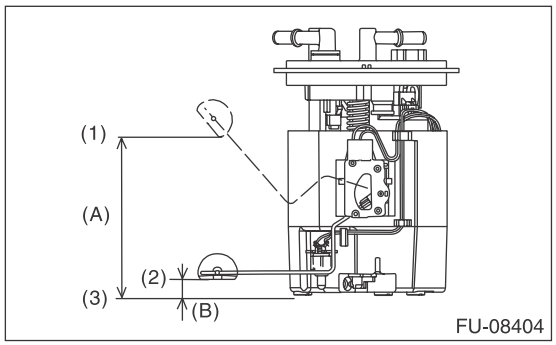

(1) FULL
(2) EMPTY
(3) Fuel tank seating surface

Float position	Standard
FULL to Fuel tank seating surface (A)	120.9±4 mm (4.759±0.157 in)
EMPTY to Fuel tank seating surface (B)	14.8±4 mm (0.583±0.157 in)

3) Measure the resistance between fuel level sensor terminals.

• Model with fuel level sensor bent in 3 locations

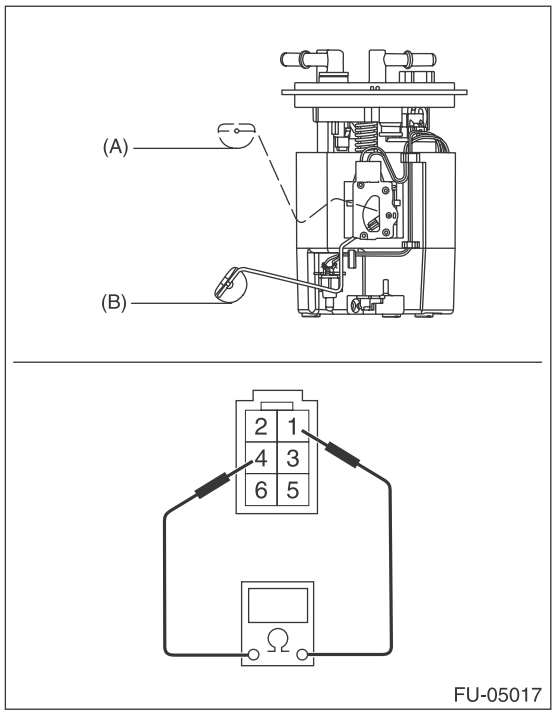

• Model with fuel level sensor bent in 2 locations

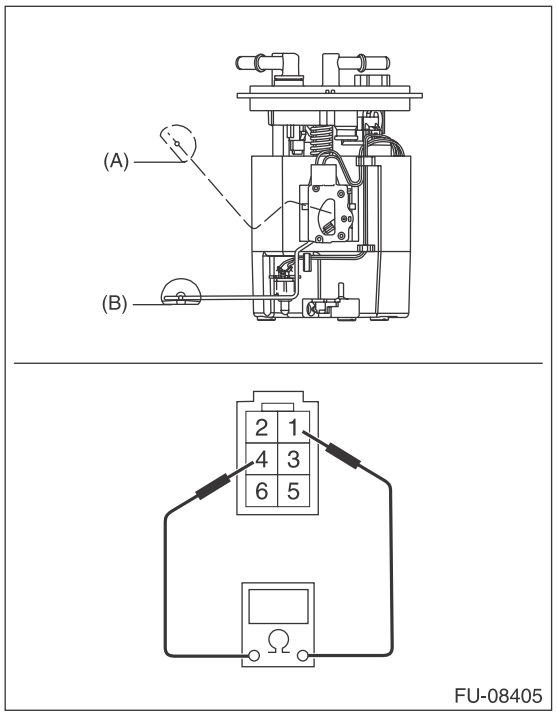

Float position	Terminal No.	Standard
FULL (A)	1 and 4	2.0±1.0 Ω
EMPTY (B)		31.9±1.0 Ω

28.Fuel Sub Level Sensor

A: REMOVAL

WARNING:
Place “NO OPEN FLAMES” signs near the working area.

CAUTION:
- **Be careful not to spill fuel.**
- **If the fuel gauge indicates that two thirds or more of the fuel is remaining, be sure to drain fuel before starting work to avoid the fuel to spill.**

1) Release the fuel pressure. <Ref. to FU(H4DOTC)-65, RELEASING OF FUEL PRESSURE, PROCEDURE, Fuel.>
2) Drain fuel. <Ref. to FU(H4DOTC)-65, DRAINING FUEL (WITH SUBARU SELECT MONITOR), PROCEDURE, Fuel.>
3) Disconnect the ground cable from battery.

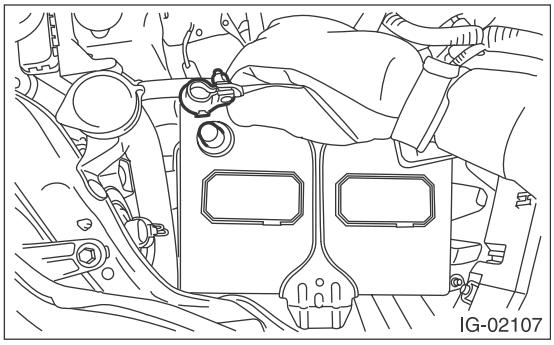
IG-02107

4) Remove the rear seat cushion. <Ref. to SE-32, REMOVAL, Rear Seat.>
5) Remove the service hole cover.

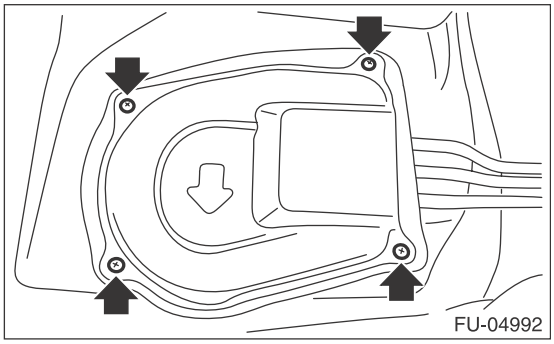
FU-04992

6) Disconnect the connector (A) from fuel sub level sensor, and remove the clip (B) securing the fuel cord from fuel sub level sensor protector.

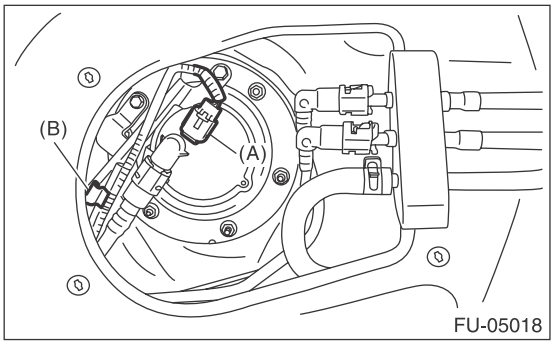

FU-05018

7) Remove the bolts (A) securing the fuel sub level sensor protector to the fuel sub level sensor upper plate, and remove the fuel sub level sensor protector.
8) Disconnect the quick connector on the fuel sub delivery tube (B). <Ref. to FU(H4DOTC)-87, REMOVAL, Fuel Delivery, Return and Evaporation Lines.>

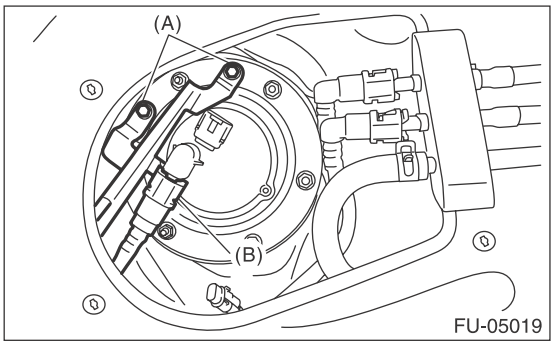

FU-05019

9) Remove the nuts securing the fuel sub level sensor upper plate to the fuel tank and remove the fuel sub level sensor upper plate.

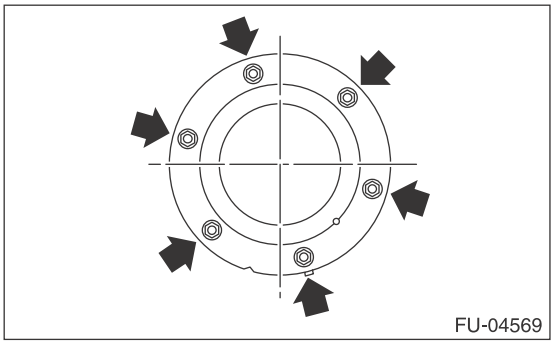
FU-04569

10) Remove the fuel sub level sensor from the fuel tank.

B: INSTALLATION

Install in the reverse order of removal while being careful of the following.

- Make sure the sealing portion is free from fuel or foreign matter before installation.
- Align protrusion (A) of the gasket to the position shown in the figure.
- Align protrusion (B) of the fuel sub level sensor to the cutout in the fuel sub level sensor upper plate.
- After tightening the bolts to the specified torque in the order indicated in the figure, install the fuel sub level sensor protector.

NOTE:
Use a new gasket and retainer.

Tightening torque:
4.4 N·m (0.4 kgf-m, 3.2 ft-lb)

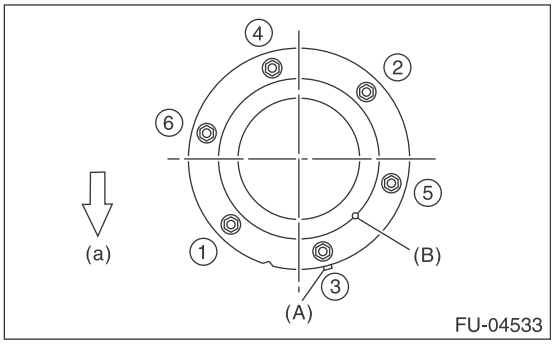

(a) Front side of vehicle

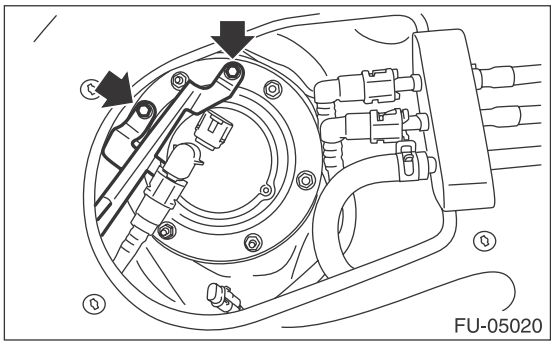

C: INSPECTION

1) Check that the fuel sub level sensor has no damage.
2) Measure the fuel sub level sensor float position.

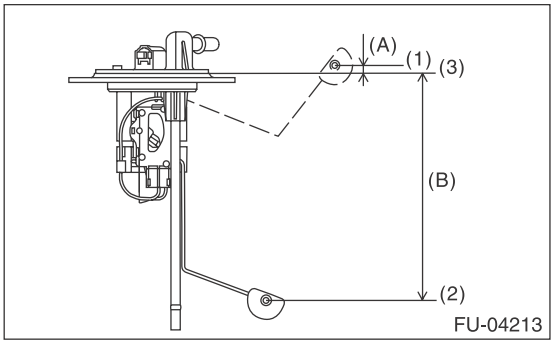

(1) FULL
(2) EMPTY
(3) Datum points

Float position	Standard
FULL to Datum point (A)	6.4±3.5 mm (0.252±0.138 in)
EMPTY to Datum point (B)	163.3±3.5 mm (6.429±0.138 in)

3) Measure the resistance between fuel sub level sensor terminals.

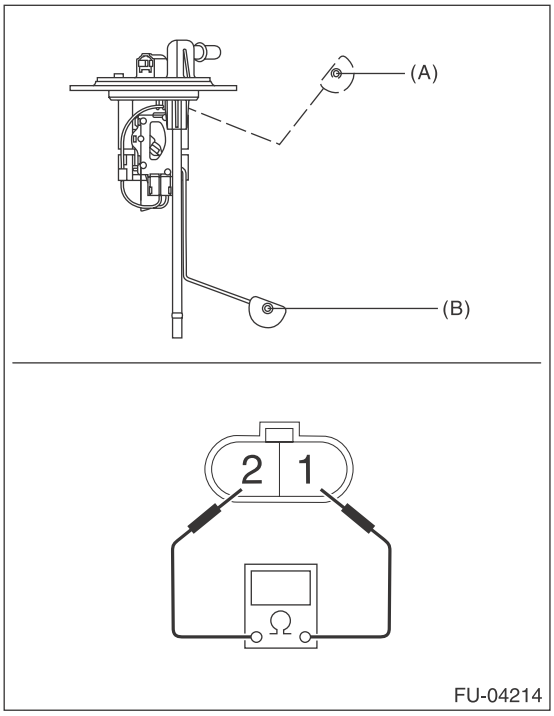

Float position	Terminal No.	Standard
FULL (A)	1 and 2	2.0±1.0 Ω
EMPTY (B)		62.1±1.0 Ω

29.Fuel Filter

A: REMOVAL

WARNING:
Place “NO OPEN FLAMES” signs near the working area.

CAUTION:
- **Be careful not to spill fuel.**
- **If the fuel gauge indicates that two thirds or more of the fuel is remaining, be sure to drain fuel before starting work to avoid the fuel to spill.**
- **Be careful not to drop or apply any impact to the fuel pump during work. This may deteriorate its performance.**

NOTE:
The fuel filter is built in fuel pump assembly.
1) Remove the fuel pump assembly. <Ref. to FU(H4DOTC)-78, REMOVAL, Fuel Pump.>
2) Remove the fuel level sensor and fuel temperature sensor. <Ref. to FU(H4DOTC)-80, REMOVAL, Fuel Level Sensor.>
3) Disconnect the connector from the fuel filter assembly.

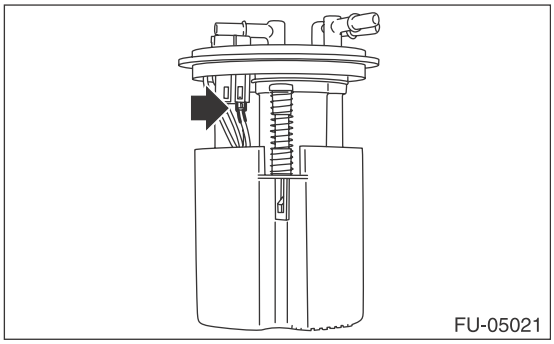
FU-05021

4) Disengage the claw connecting the fuel filter assembly and fuel chamber assembly, and separate fuel filter assembly and fuel chamber assembly.

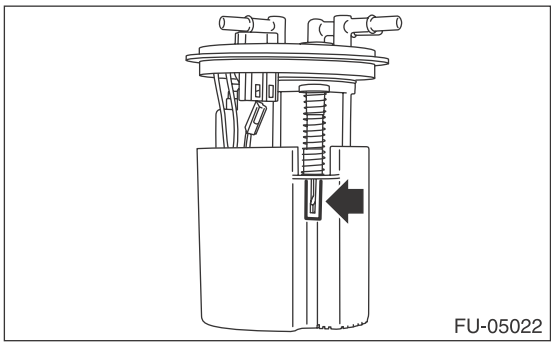
FU-05022

5) Remove the fuel pump holder from the fuel filter assembly.

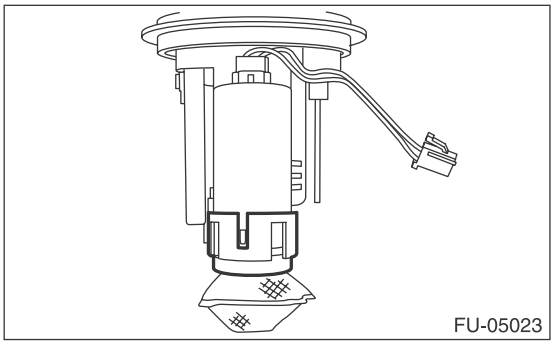
FU-05023

6) Remove the fuel pump from the fuel filter assembly.

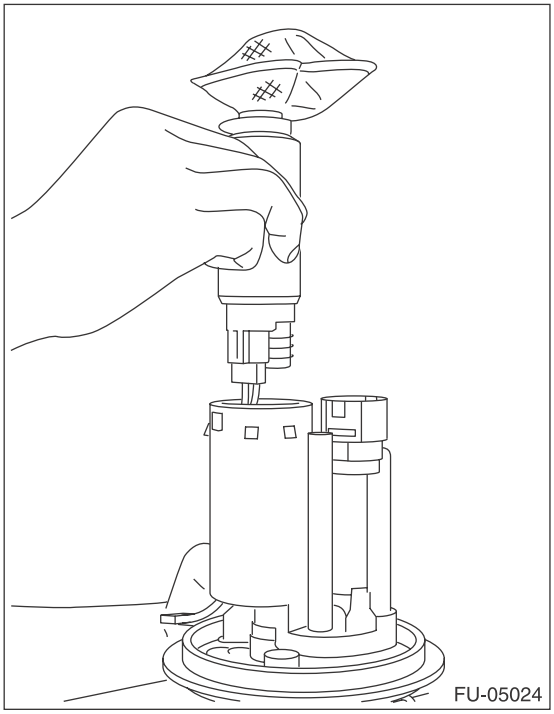
FU-05024

B: INSTALLATION

1) Assemble the gasket spacer (A) and support rubber cushion (B) to the fuel pump, and install the fuel pump to the fuel filter assembly.

NOTE:
- Use a new gasket spacer.
- Use a new support rubber cushion.
- Apply gasoline to the surface of gasket spacer and support rubber cushion.

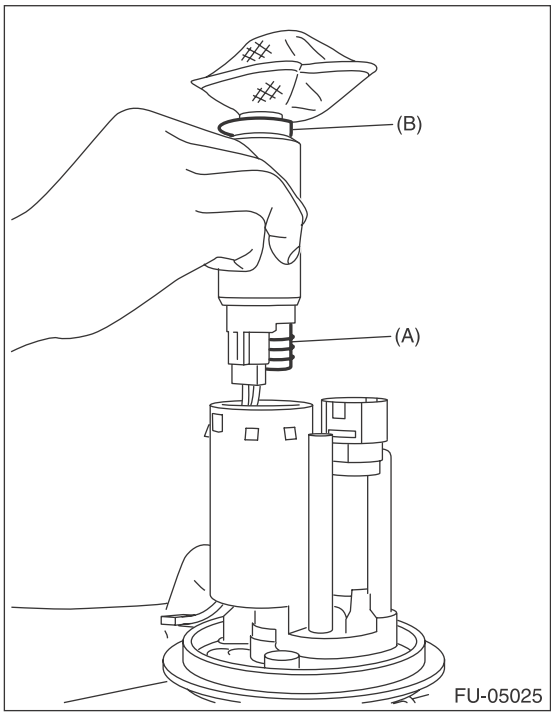

2) Install the fuel pump holder to the fuel filter assembly.

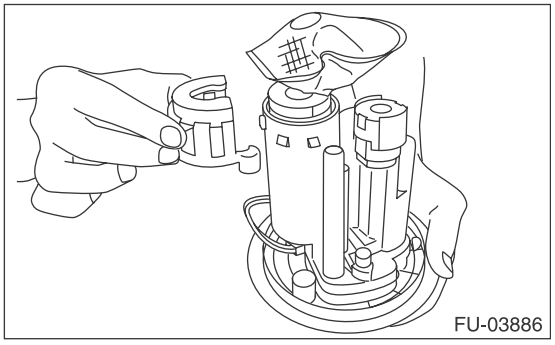

3) Install the pump module spring (A) to fuel filter assembly, and install the fuel chamber assembly (B).

NOTE:
- Use a new fuel chamber assembly.
- Check that the claw connecting the fuel filter assembly and fuel chamber assembly is securely fastened.

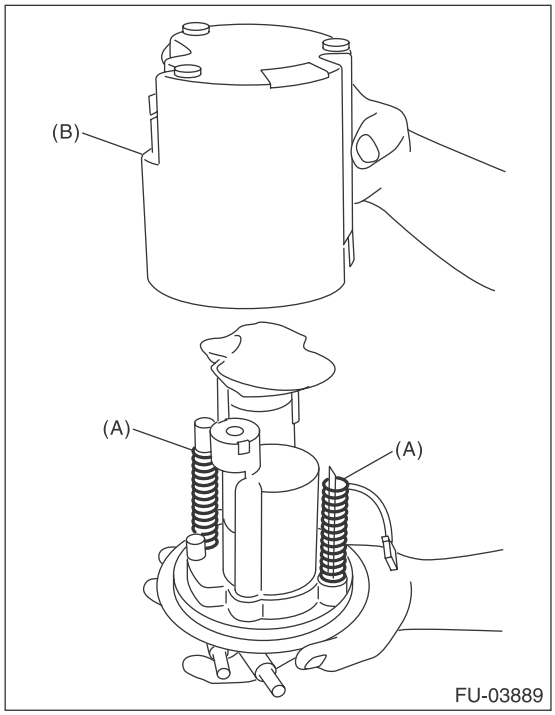

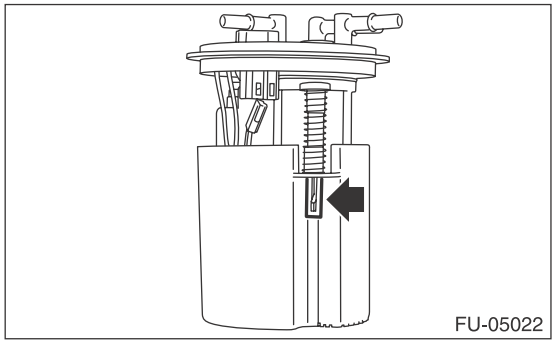

4) Connect the fuel pump connector.

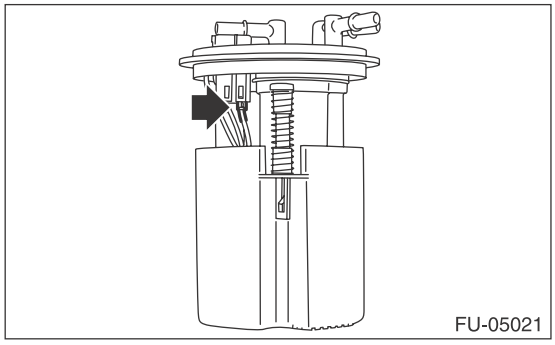

5) Install the fuel level sensor and fuel temperature sensor. <Ref. to FU(H4DOTC)-80, INSTALLATION, Fuel Level Sensor.>

6) Inspect the fuel level sensor. <Ref. to FU(H4DOTC)-80, INSPECTION, Fuel Level Sensor.>

7) Install the fuel pump assembly. <Ref. to FU(H4DOTC)-79, INSTALLATION, Fuel Pump.>

30.Fuel Damper

A: REMOVAL

WARNING:
Place "NO OPEN FLAMES" signs near the working area.

CAUTION:
- **Be careful not to spill fuel.**
- **Catch the fuel from hoses using a container or cloth.**

1) Release the fuel pressure. <Ref. to FU(H4DOTC)-65, RELEASING OF FUEL PRESSURE, PROCEDURE, Fuel.>
2) Disconnect the fuel delivery hose (A) and fuel return hose (B) from the fuel damper, and remove the fuel damper.

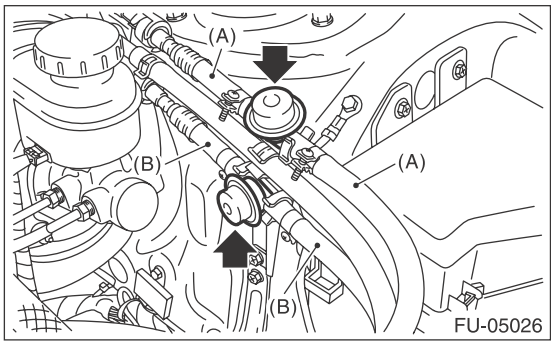

B: INSTALLATION

Install in the reverse order of removal.

NOTE:
If fuel hoses or clamps are damaged, replace them with new parts.

Tightening torque:
1.25 N·m (0.1 kgf-m, 0.9 ft-lb)

C: INSPECTION

1) Check that the fuel damper has no deformation, cracks or other damages.
2) Check that the fuel hose has no cracks, damage or loose part.

31.Fuel Delivery, Return and Evaporation Lines

A: REMOVAL

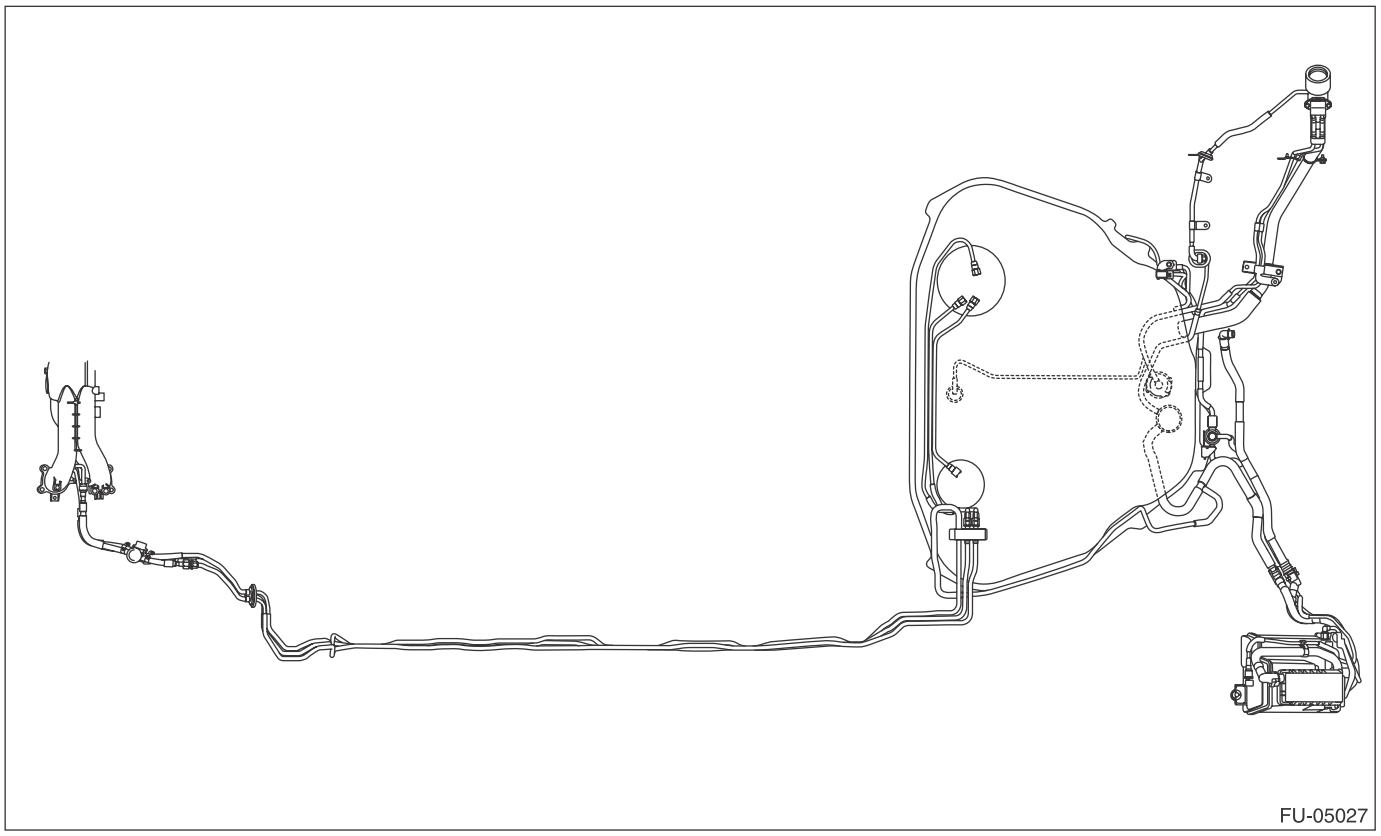

WARNING:
Place "NO OPEN FLAMES" signs near the working area.

CAUTION:
Be careful not to spill fuel.

1) Set the vehicle on a lift.
2) Release the fuel pressure. <Ref. to FU(H4DOTC)-65, RELEASING OF FUEL PRESSURE, PROCEDURE, Fuel.>
3) Open the fuel filler lid and remove the fuel filler cap.
4) Remove the floor mat. <Ref. to EI-162, REMOVAL, Floor Mat.>
5) In the engine compartment, disconnect the fuel delivery hoses, fuel return hoses and evaporation hoses.

CAUTION:
- **Be careful not to spill fuel.**
- **Catch the fuel from hoses using a container or cloth.**

(1) Remove the connect check cover from the fuel delivery hose and fuel return hose.

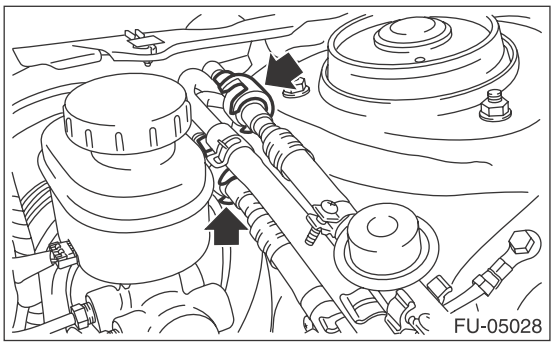

(2) Install the ST to the fuel pipe.

ST 42099AE000 QUICK CONNECTOR RELEASE

(3) Disconnect the quick connector of the fuel delivery hose and fuel return hose by pushing the ST in the direction of the arrow.

(4) Remove the clip and disconnect the evaporation hose from the fuel pipe.

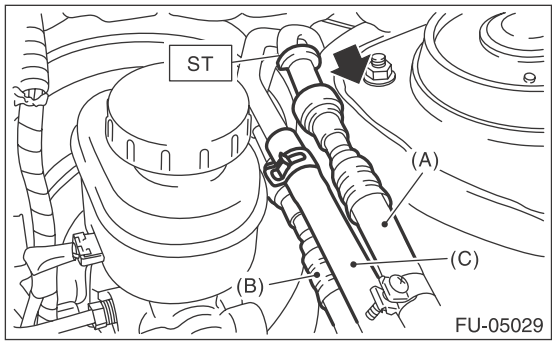

(A) Fuel delivery hose
(B) Fuel return hose
(C) Evaporation hose

6) Remove the fuel tank. <Ref. to FU(H4DOTC)-67, REMOVAL, Fuel Tank.>
7) Remove the rear mud guard LH. <Ref. to EI-38, REMOVAL, Mud Guard.>
8) Remove the purge hose (A), purge pipe (B), air vent hose (C), PCV outlet hose (D), PCV drain hose (E) and drain tube assembly (F).

NOTE:
Disconnect the quick connector as shown in the figure.

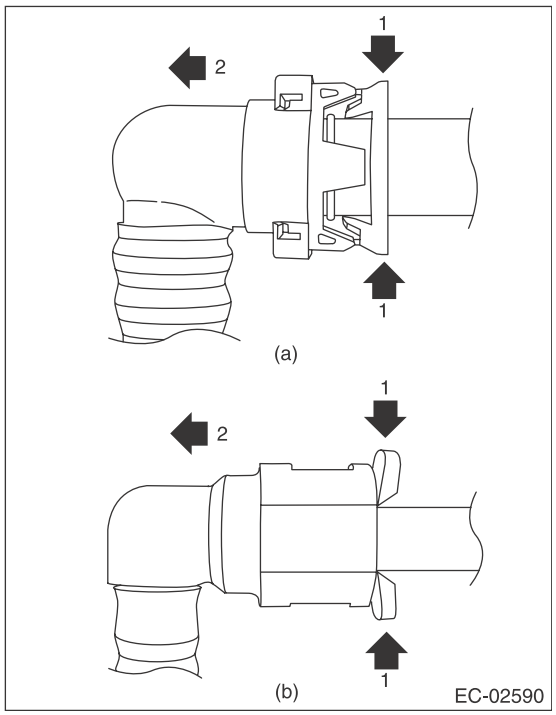

(a) Air vent hose (C), drain tube ASSY (F)
(b) PCV outlet hose (D), PCV drain hose (E)

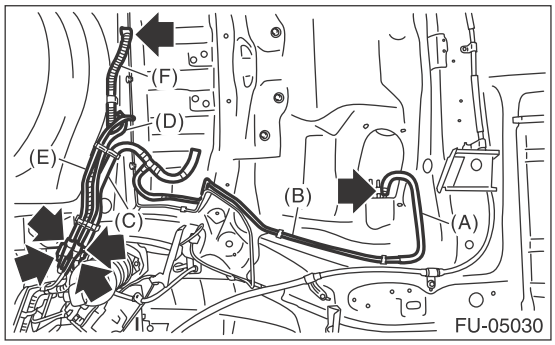

9) Remove the fuel pipe assembly from vehicle.
10) Disconnect the quick connector, then disconnect the fuel delivery tube, fuel return tube and fuel sub delivery tube.
(1) Push the retainer in the direction of the arrow, disconnect the quick connector from pipe.

NOTE:
Clean the pipe and quick connector, if they are covered with dust.

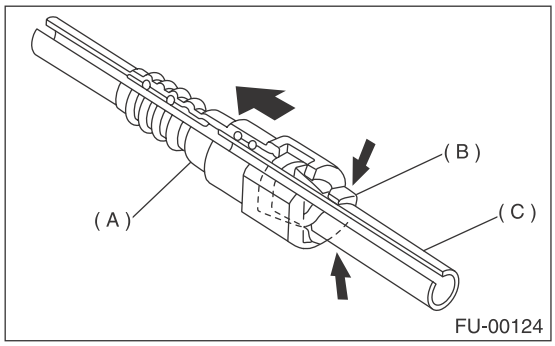

(A) Quick connector
(B) Retainer
(C) Pipe

(2) To prevent from damaging or entering foreign matter, wrap the pipes and quick connectors with plastic bag etc.

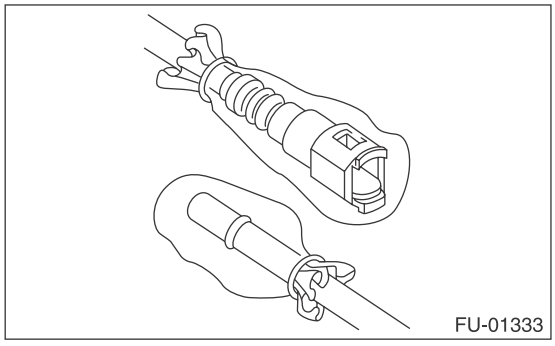

11) Remove the evaporation pipe.
(1) Remove the rear mud guard RH. <Ref. to EI-38, REMOVAL, Mud Guard.>

(2) Remove the evaporation hose.

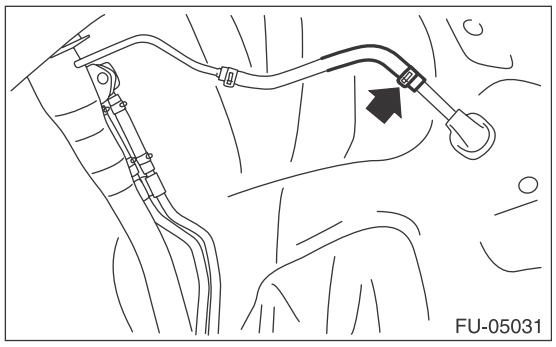

(3) Remove the trunk side trim panel assembly - side on RH. <Ref. to EI-109, REMOVAL, Rear Quarter Trim.>

(4) Remove the evaporation pipe protector.

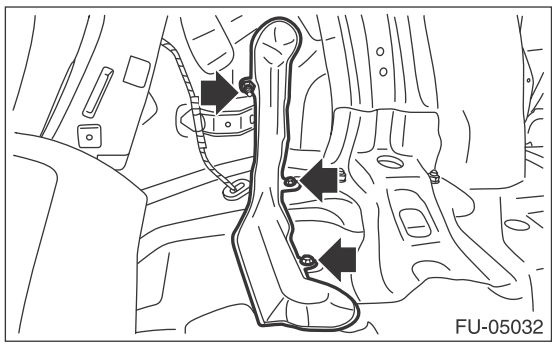

(5) Remove the evaporation pipe from the vehicle.

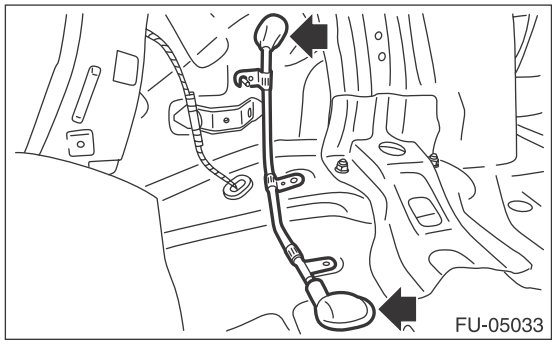

B: INSTALLATION

Install in the reverse order of removal while being careful of the following.

1. INSTALLATION OF EVAPORATION PIPE

1) Install the evaporation pipe to the vehicle.

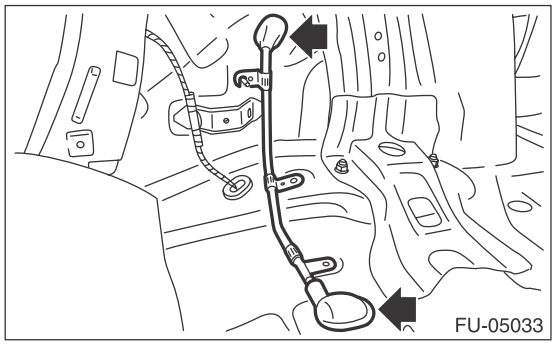

2) Install the evaporation pipe protector.

Tightening torque:
T1: 1 N·m (0.1 kgf-m, 0.7 ft-lb)
T2: 7.5 N·m (0.7 kgf-m, 5.4 ft-lb)

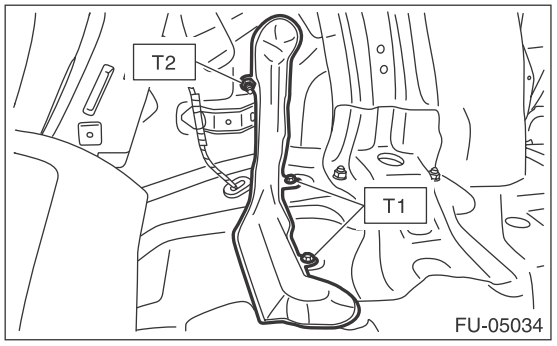

3) Install the trunk side trim panel assembly - side on RH. <Ref. to EI-119, INSTALLATION, Rear Quarter Trim.>

4) Install the evaporation hose.

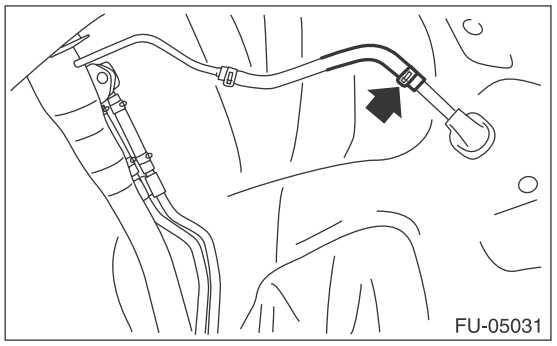

5) Install the rear mud guard RH. <Ref. to EI-38, INSTALLATION, Mud Guard.>

2. CONNECTING THE FUEL LINE QUICK CONNECTOR

CAUTION:
Make sure there are no damage or dust on connections. If necessary, clean seal surface of pipe.

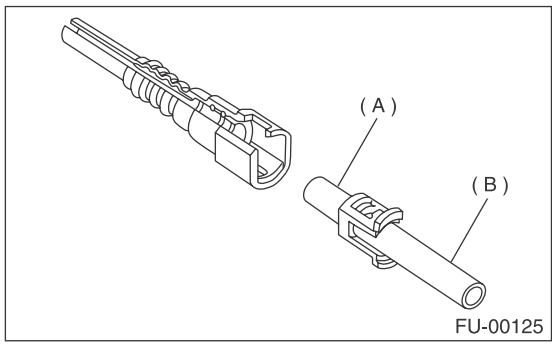

(A) Seal surface
(B) Pipe

1) Set the retainer to quick connector.

NOTE:
Use a new retainer.
2) Connect the quick connector to pipe.

CAUTION:
• Make sure that the quick connector is securely connected.

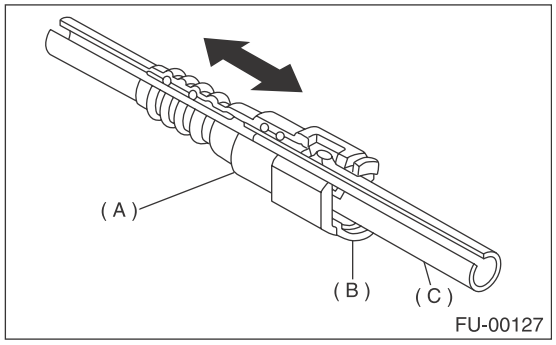

(A) Quick connector
(B) Retainer
(C) Pipe

• Make sure the two retainer pawls are engaged in their mating positions in the quick connector.

• Be sure to inspect tubes and their connections for any leakage of fuel.

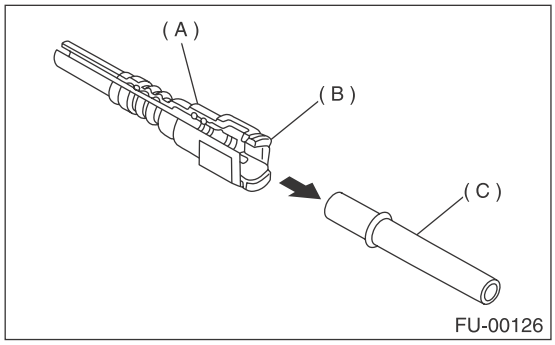

(A) Quick connector
(B) Retainer
(C) Pipe

3. CONNECT FUEL DELIVERY HOSE AND FUEL RETURN HOSE.

Connect the fuel delivery hose and fuel return hose as shown in the figure.

CAUTION:
• If the connection portion has a spool or stopper, do not allow the end of the hose to bend or ride over by inserting the hose too deep.
• Be sure to inspect hoses and their connections for any leakage of fuel.

Tightening torque:
1.25 N·m (0.1 kgf-m, 0.9 ft-lb)

L1: 2.5±1.5 mm (0.098±0.059 in)

L2: 22.5±2.5 mm (0.886±0.098 in)

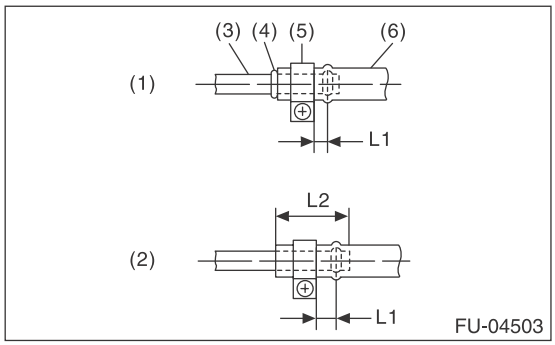

(1) When there is a spool or stopper
(2) When there is no spool or stopper
(3) Pipe
(4) Spool or stopper
(5) Clamp
(6) Hose

4. EVAPORATION HOSE CONNECTION

Connect the evaporation hose to the pipe with an overlap of 15 to 20 mm (0.59 to 0.79 in).

L = 17.5±2.5 mm (0.689±0.098 in)

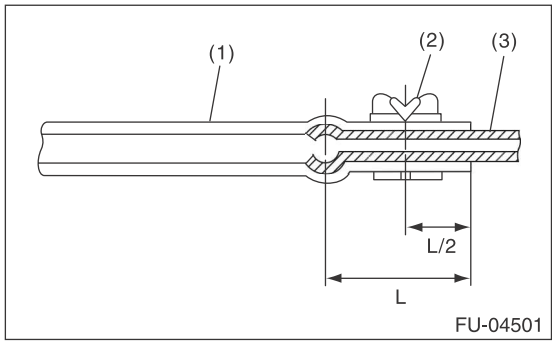

(1) Hose
(2) Clip
(3) Pipe

5. CONNECTING THE EVAPORATION LINE QUICK CONNECTOR

CAUTION:
• Make sure there are no damage or dust on connections. If necessary, clean the seal surface of the pipe.
• Make sure that the quick connector is securely connected.

Connect the quick connector as shown in the figure.

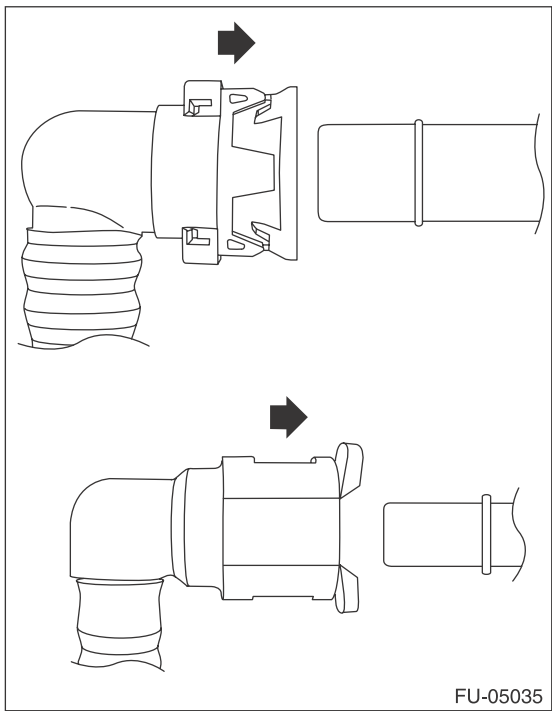

C: INSPECTION

1) Check that the fuel pipe has no deformation, cracks or other damages.
2) Check that the hose and tube have no cracks, damage or loose part.

32.Fuel System Trouble in General

A: INSPECTION

Trouble	Possible cause	Corrective action
Insufficient fuel supply to injector	a. Fuel pump does not operate.	
	❍ Defective terminal contact	Inspect contact, especially ground, and tighten it securely.
	❍ Trouble in electromagnetic or electronic circuit parts	Replace the faulty parts.
	b. Decline of fuel pump function	Replace the fuel pump.
	c. Clogged fuel filter	Replace the fuel filter. Clean or replace the fuel tank if necessary.
	d. Clogged or bent pipe, hose or tube of fuel line	Clean, correct or replace the pipe, hose or tube of the fuel line.
	e. Air is mixed in fuel system.	Check the fuel line connections, and repair or replace the defective part.
	f. Damaged diaphragm of pressure regulator	Replace the pressure regulator.
Leakage or run-out of fuel	a. Loose connection in pipe, hose or tube of fuel line	Check the fuel line connections, and repair or replace the defective part.
	b. Cracks in pipe, hose or tube of fuel line	Replace the pipe, hose or tube of the fuel line.
	c. Cracks or defective welded part of fuel tank	Replace the fuel tank.
	d. Clogged or bent pipe, hose or tube of fuel line	Clean, correct or replace the pipe, hose or tube of the fuel line.
Gasoline smell inside of compartment	a. Loose connection in pipe, hose or tube of fuel line	Check the fuel line connections, and repair or replace the defective part.
	b. Improper installation of rubber saucer	Correct or replace the rubber saucer.
	c. Defective canister	Replace the canister.
Defective fuel gauge	a. Defective operation of fuel level sensor	Replace the fuel level sensor.
	b. Defective operation of combination meter	Replace the combination meter.
Noise	a. Big operation noise or vibration from fuel pump	Replace the fuel pump.

NOTE:
• When the vehicle is left unattended for an extended period of time, water may accumulate in the fuel tank. Fill fuel fully to prevent the problem.
• In snow-covered areas, mountainous areas, skiing areas, etc. where ambient temperatures drop to 0°C (32°F) or less throughout the winter season, use a water removing agent in the fuel system to prevent freezing fuel system and accumulating water.
• When water is accumulated in fuel filter, fill the water removing agent in the fuel tank.
• Before using water removing agent, follow the cautions noted on the bottle.

EMISSION CONTROL (AUX. EMISSION CONTROL DEVICES)

EC(H4DOTC)

		Page
1.	General Description	2
2.	Front Catalytic Converter	3
3.	Rear Catalytic Converter	4
4.	Canister	5
5.	Purge Control Solenoid Valve	9
6.	Fuel Level Sensor	14
7.	Fuel Temperature Sensor	15
8.	Fuel Sub Level Sensor	16
9.	Fuel Tank Pressure Sensor	17
10.	Pressure Control Solenoid Valve	19
11.	Drain Filter	20
12.	Shut Valve	21
13.	Drain Valve	22
14.	PCV Hose Assembly	23
15.	PCV Valve	24

1. General Description

A: CAUTION

• Wear appropriate work clothing, including a cap, protective goggles and protective shoes when performing any work.
• Remove contamination including dirt and corrosion before removal, installation or disassembly.
• Keep the disassembled parts in order and protect them from dust and dirt.
• Before removal, installation or disassembly, be sure to clarify the failure. Avoid unnecessary removal, installation, disassembly and replacement.
• Vehicle components are extremely hot after driving. Be wary of receiving burns from heated parts.
• Be sure to tighten fasteners including bolts and nuts to the specified torque.
• Place shop jacks or rigid racks at the specified points.
• Before disconnecting connectors of sensors or units, be sure to disconnect the ground cable from the battery.

B: PREPARATION TOOL

1. SPECIAL TOOL

ILLUSTRATION	TOOL NUMBER	DESCRIPTION	REMARKS
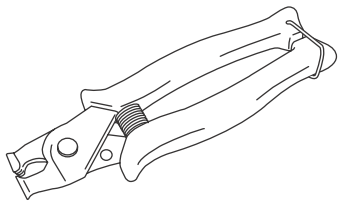 ST18353AA000	18353AA000	CLAMP PLIERS	• Used for removing and installing the PCV hose. • This tool is made by the French company CAILLAU. (code) 54.0.000.205 To make it easier to obtain, it has been provided with a tool number.

2. GENERAL TOOL

TOOL NAME	REMARKS
Circuit tester	Used for measuring resistance and voltage.
Mighty Vac	Used for inspecting the fuel tank pressure sensor.

2. Front Catalytic Converter

A: REMOVAL

The front catalytic converter is integrated into the center exhaust pipe (front). Refer to “Center Exhaust Pipe” for removal procedures. <Ref. to EX(H4DOTC)-12, REMOVAL, Center Exhaust Pipe.>

B: INSTALLATION

The front catalytic converter is integrated into the center exhaust pipe (front). Refer to “Center Exhaust Pipe” for installation procedures. <Ref. to EX(H4DOTC)-13, INSTALLATION, Center Exhaust Pipe.>

C: INSPECTION

1) Check the connections and welds for exhaust leaks.
2) Make sure there are no holes or rusting.

3. Rear Catalytic Converter

A: REMOVAL

The rear catalytic converter is integrated into the center exhaust pipe (front). Refer to “Center Exhaust Pipe” for removal procedures. <Ref. to EX(H4DOTC)-12, REMOVAL, Center Exhaust Pipe.>

B: INSTALLATION

The rear catalytic converter is integrated into the center exhaust pipe (front). Refer to “Center Exhaust Pipe” for installation procedures. <Ref. to EX(H4DOTC)-13, INSTALLATION, Center Exhaust Pipe.>

C: INSPECTION

1) Check the connections and welds for exhaust leaks.
2) Make sure there are no holes or rusting.

4. Canister

A: REMOVAL

1) Remove the rear wheel LH.
2) Lift up the vehicle.
3) Remove the rear mud guard LH. <Ref. to EI-38, REMOVAL, Mud Guard.>
4) Disconnect the quick connectors of the vent tube (A), canister drain tube (B), charge tube (C) and PCV drain tube (D), and remove the tubes from clips (E).

NOTE:
Disconnect the quick connector as shown in the figure.

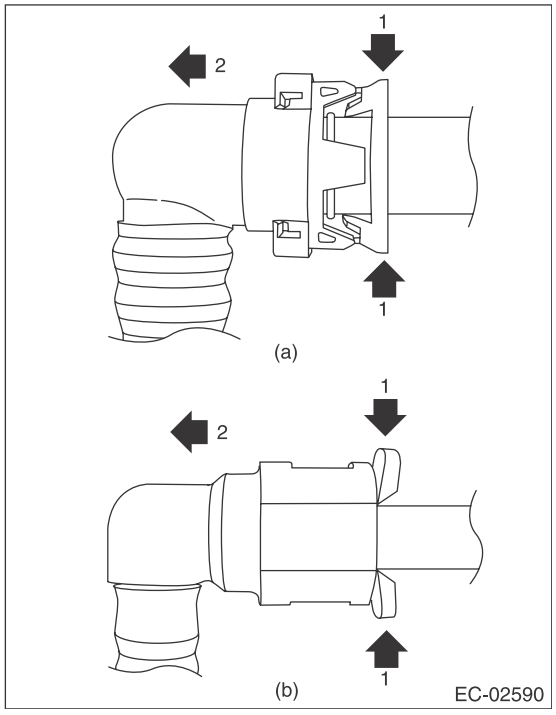

(a) Vent tube (A) and canister drain tube (B)
(b) Charge tube (C) and PCV drain tube (D)

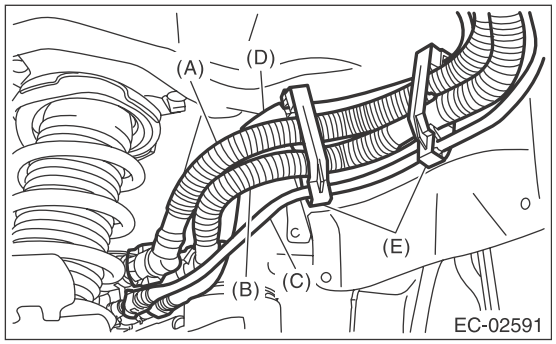

5) Remove the clip holding the rear wiring harness.

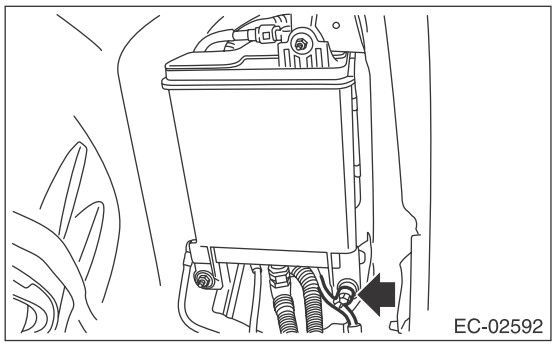

6) Remove the canister from vehicle.

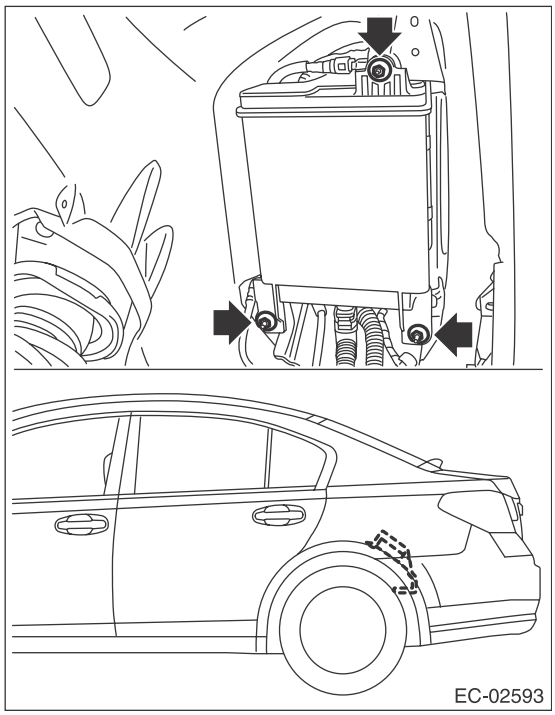

7) Disconnect the connector from drain valve.

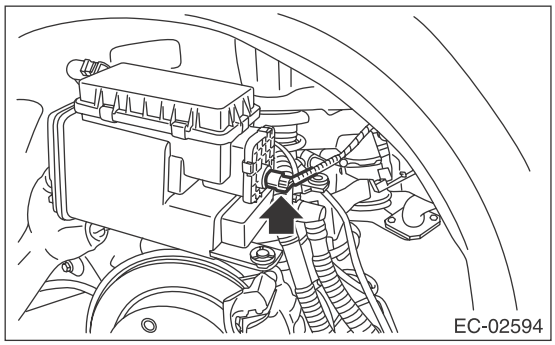

8) Disconnect the vent tube (A), canister drain tube (B), charge tube (C) and PCV drain tube (D) from canister, and remove the canister drain tube and PCV drain tube (D) from clip (E).

NOTE:
Disconnect the quick connector as shown in the figure.

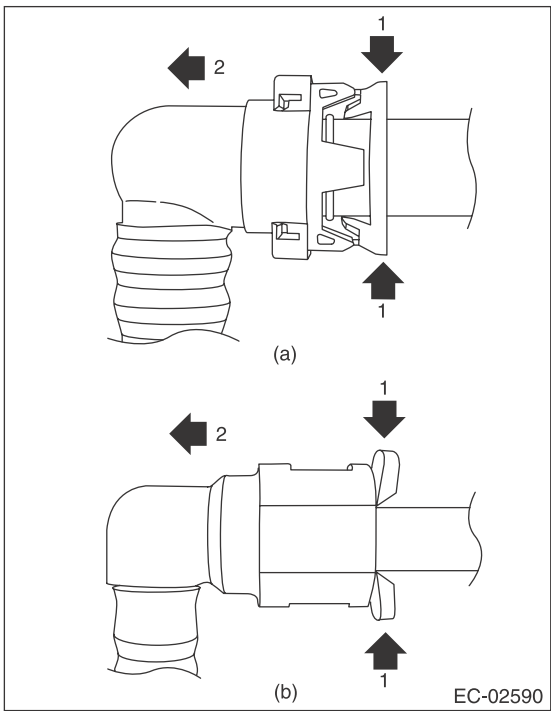

(a) Vent tube (A) and canister drain tube (B)
(b) Charge tube (C) and PCV drain tube (D)

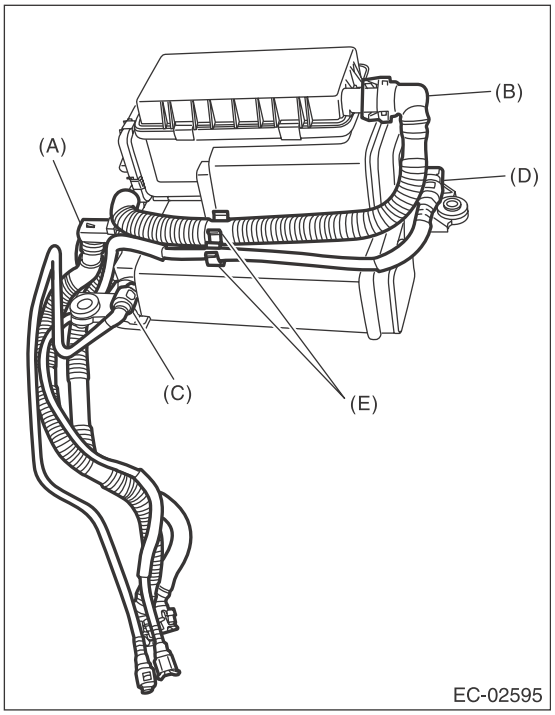

B: INSTALLATION

1) Connect the vent tube (A), canister drain tube (B), charge tube (C) and PCV drain tube (D) to canister, and install the canister drain tube (B) and PCV drain tube (D) to clips (E).

CAUTION:
• Make sure there are no damage or dust on connections. If necessary, clean the seal surface of the pipe.
• Make sure that the quick connector is securely connected.

NOTE:
Connect the quick connector as shown in the figure.

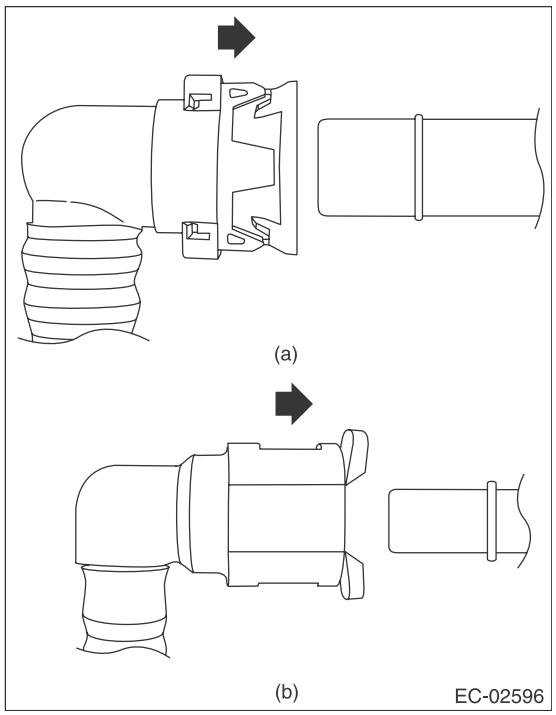

(a) Vent tube (A) and canister drain tube (B)
(b) Charge tube (C) and PCV drain tube (D)

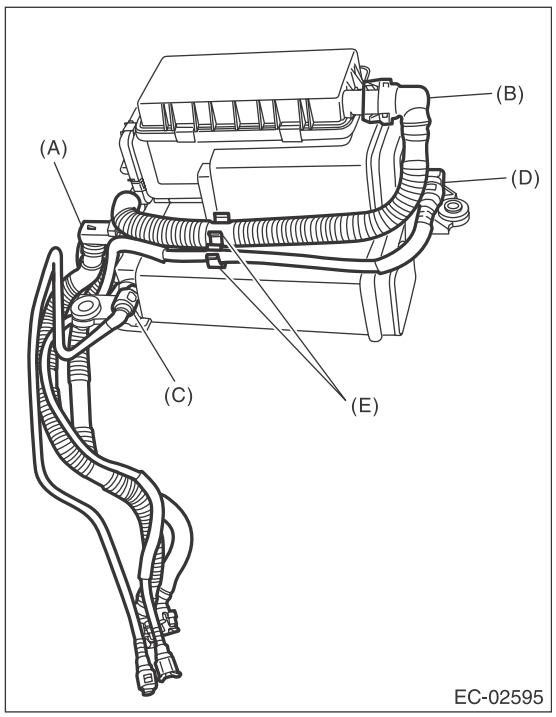

2) Connect the connector to the drain valve.

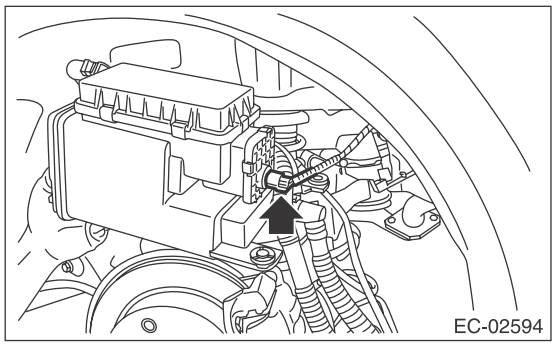

3) Install the canister to the vehicle.

Tightening torque:
8 N·m (0.8 kgf-m, 5.9 ft-lb)

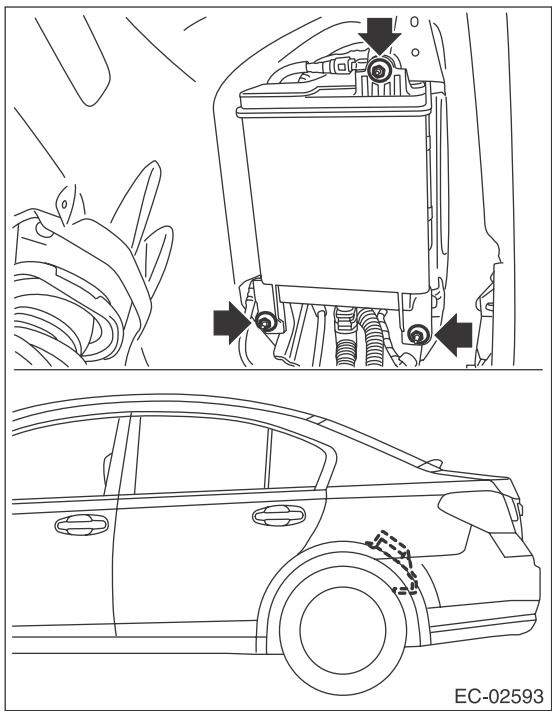

4) Secure the rear wiring harness with clip.

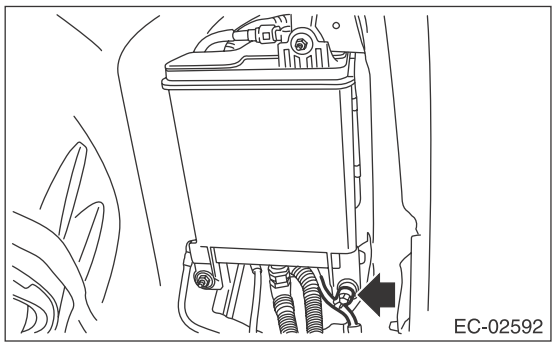

5) Attach all tubes to clips (E), and connect the quick connectors of the vent tube (A), canister drain tube (B), charge tube (C) and PCV drain tube (D).

CAUTION:
• Make sure there are no damage or dust on connections. If necessary, clean the seal surface of the pipe.
• Make sure that the quick connector is securely connected.

NOTE:
Connect the quick connector as shown in the figure.

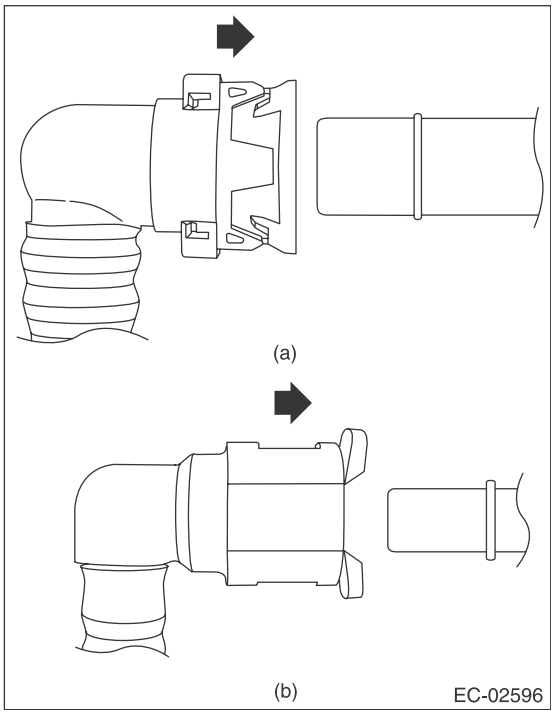

(a) Vent tube (A) and canister drain tube (B)
(b) Charge tube (C) and PCV drain tube (D)

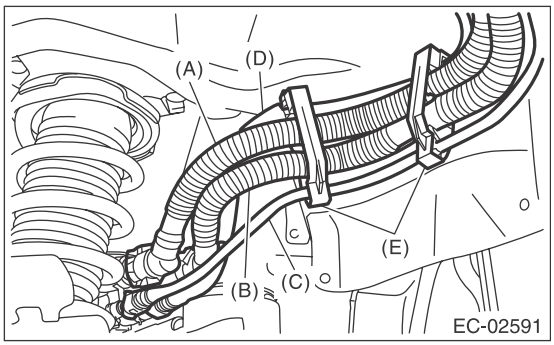

6) Install the rear mud guard LH. <Ref. to EI-38, INSTALLATION, Mud Guard.>
7) Lower the vehicle.
8) Install the rear wheel LH.

Tightening torque:
120 N·m (12.2 kgf-m, 88.5 ft-lb)

C: INSPECTION

1) Check that the canister has no deformation, cracks or other damages.
2) Check that the tube has no cracks, damage or loose part.

5. Purge Control Solenoid Valve

A: REMOVAL

1. PURGE CONTROL SOLENOID VALVE 1

1) Remove the collector cover.
2) Disconnect the ground cable from battery.

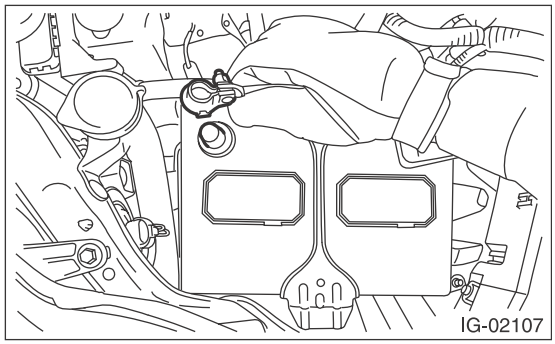

3) Remove the intercooler. <Ref. to IN(H4DOTC)-17, REMOVAL, Intercooler.>
4) Remove the bolt securing the solenoid valve bracket assembly from intake manifold.

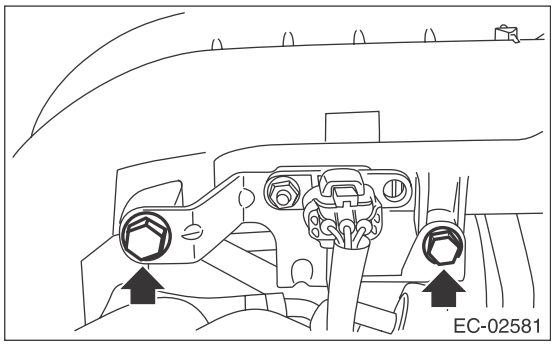

5) Remove the bolts securing the PCV pipe and engine harness from intake manifold.

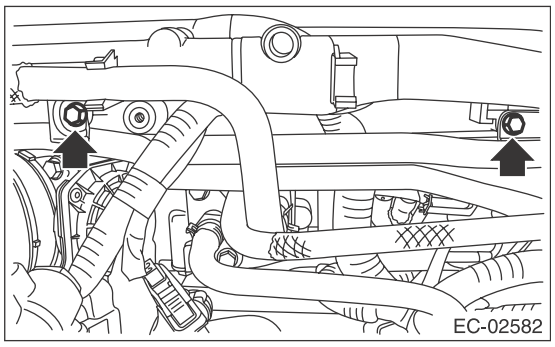

6) Remove the nut securing the purge control solenoid valve 1 to the solenoid valve bracket assembly.

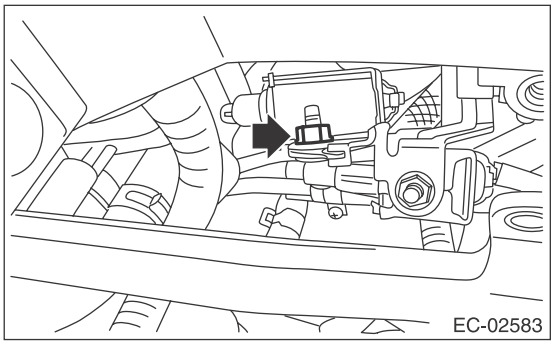

7) Disconnect the connector (A) and evaporation hose (B), and then remove the purge control solenoid valve 1.

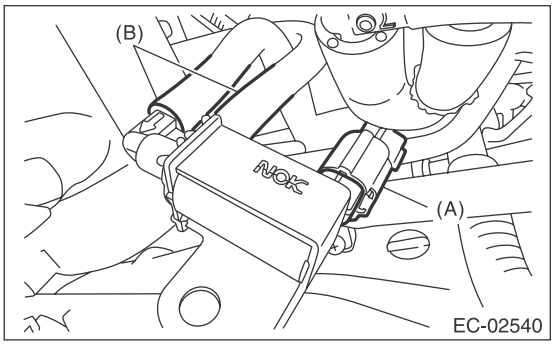

2. PURGE CONTROL SOLENOID VALVE 2

1) Remove the collector cover.
2) Disconnect the ground cable from battery.

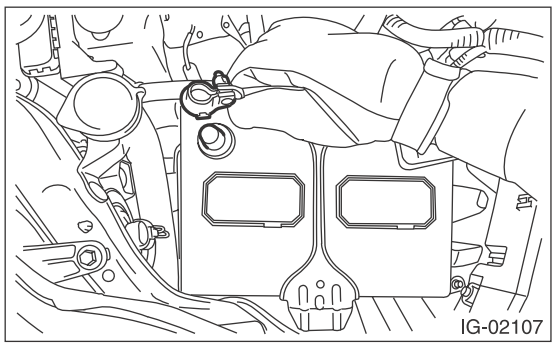

3) Remove the intercooler. <Ref. to IN(H4DOTC)-17, REMOVAL, Intercooler.>

4) Remove the bolt securing the solenoid valve bracket assembly from intake manifold.

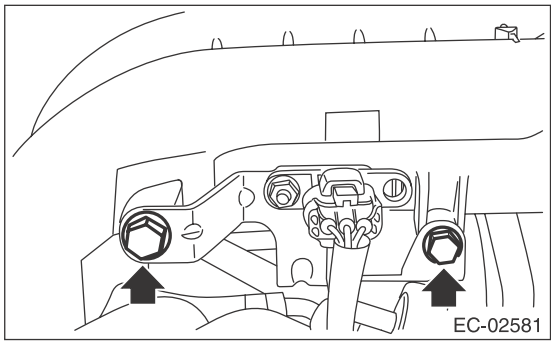

5) Remove the bolts securing the PCV pipe and engine harness from intake manifold.

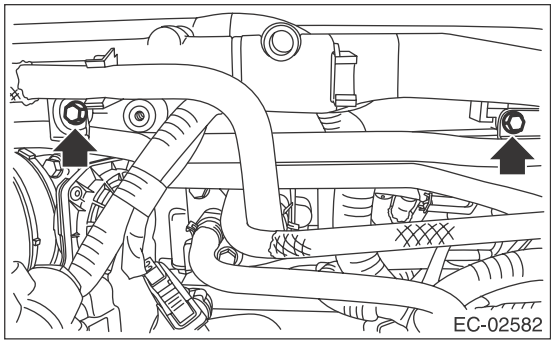

6) Remove the nut securing the purge control solenoid valve 2 to the solenoid valve bracket assembly.

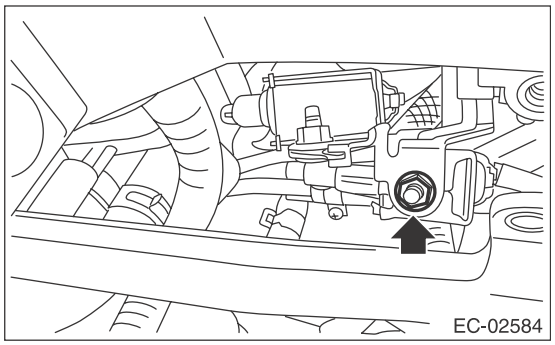

7) Disconnect the connector (A) and evaporation hose (B), and then remove the purge control solenoid valve 2.

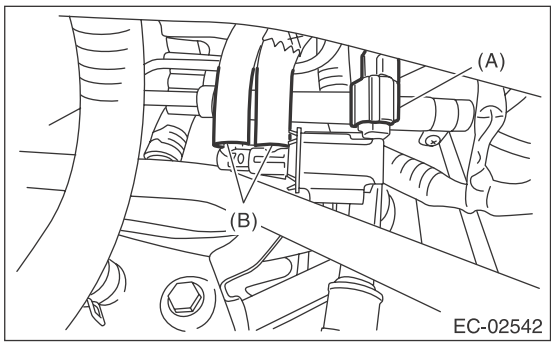

B: INSTALLATION

1. PURGE CONTROL SOLENOID VALVE 1

Install in the reverse order of removal.

NOTE:
Connect the evaporation hose as shown in the figure.

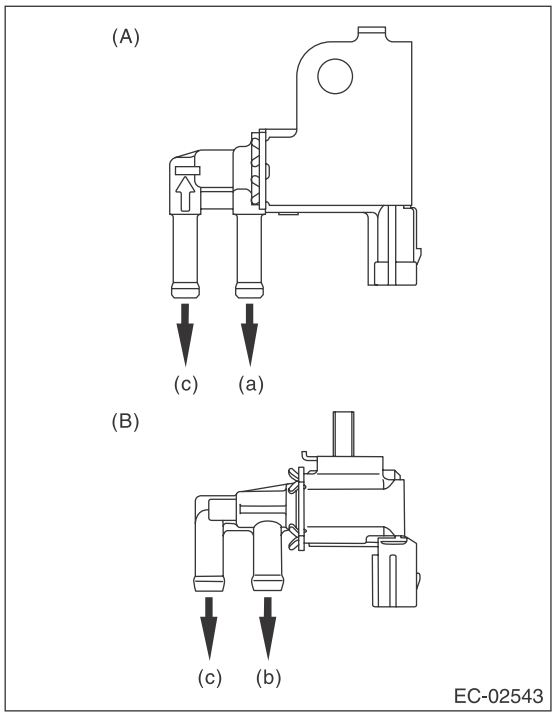

(A) Purge control solenoid valve 1
(B) Purge control solenoid valve 2
(a) To intake manifold
(b) To intake duct
(c) To fuel pipe

Tightening torque:
6.4 N·m (0.7 kgf-m, 4.7 ft-lb)

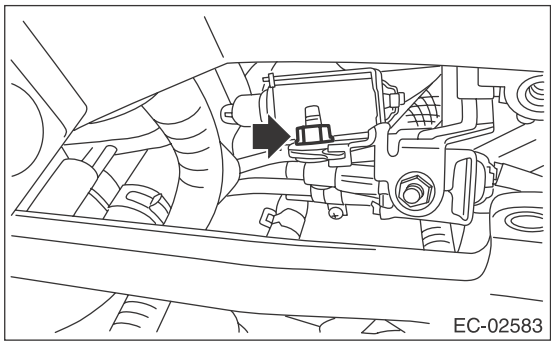

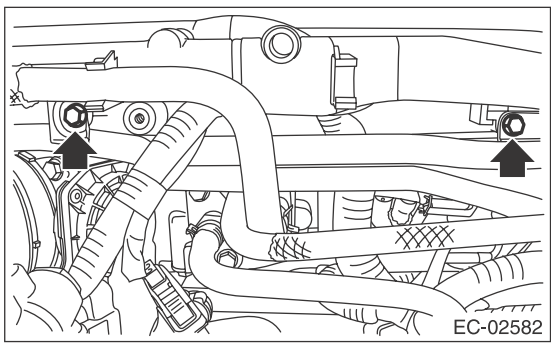

Tightening torque:
19 N·m (1.9 kgf-m, 14.0 ft-lb)

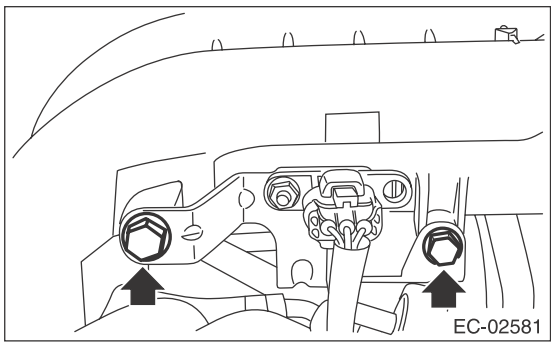

2. PURGE CONTROL SOLENOID VALVE 2

Install in the reverse order of removal.

NOTE:
Connect the evaporation hose as shown in the figure.

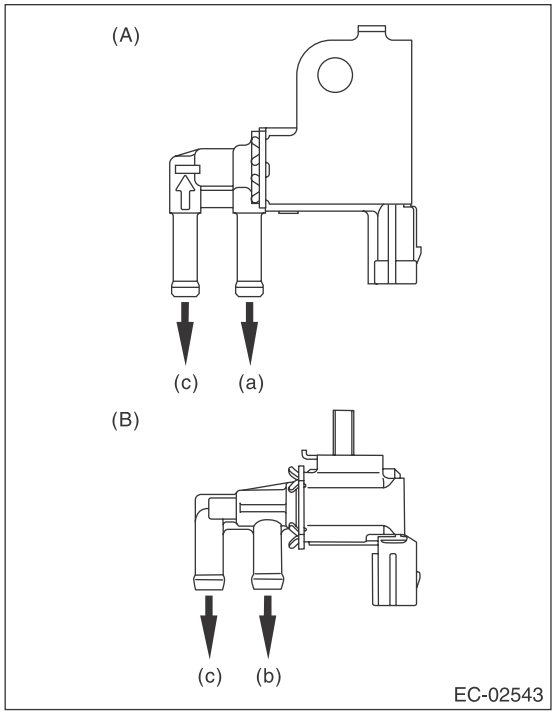

(A) Purge control solenoid valve 1
(B) Purge control solenoid valve 2
(a) To intake manifold
(b) To intake duct
(c) To fuel pipe

Tightening torque:
6.4 N·m (0.7 kgf-m, 4.7 ft-lb)

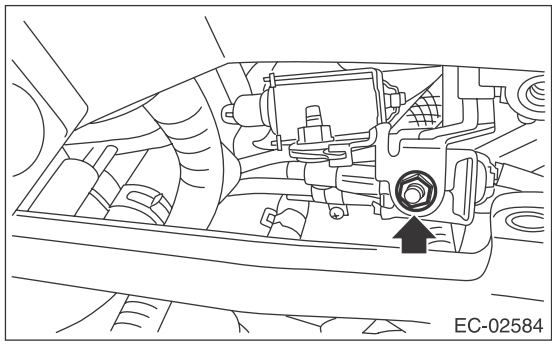

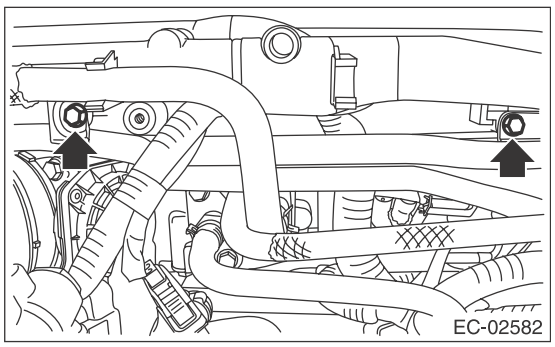

Tightening torque:
19 N·m (1.9 kgf-m, 14.0 ft-lb)

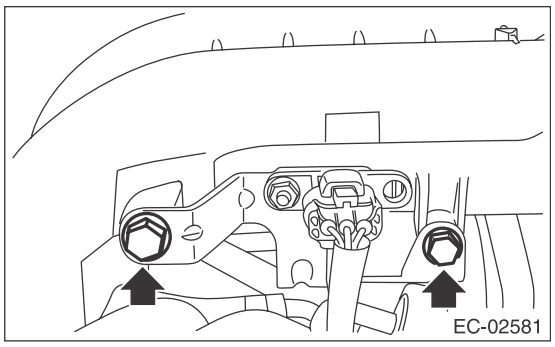

C: INSPECTION

1. PURGE CONTROL SOLENOID VALVE

1) Check that the purge control solenoid valve has no deformation, cracks or other damages.
2) Measure the resistance between the purge control solenoid valve terminals.

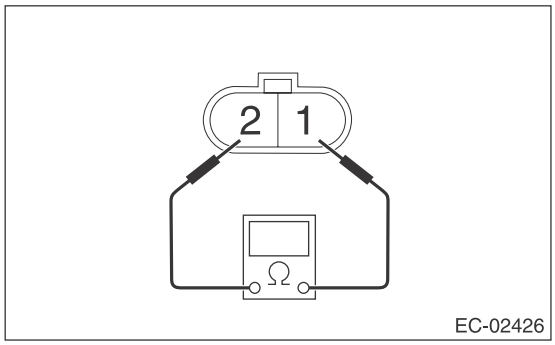

	Terminal No.	Standard
Purge control solenoid valve 1	1 and 2	32 ±2 Ω (when 20°C (68°F))
Purge control solenoid valve 2		24 ±3 Ω (when 20°C (68°F))

3) Check that air does not come out from (B) when air is blown into (A).

- Purge control solenoid valve 1

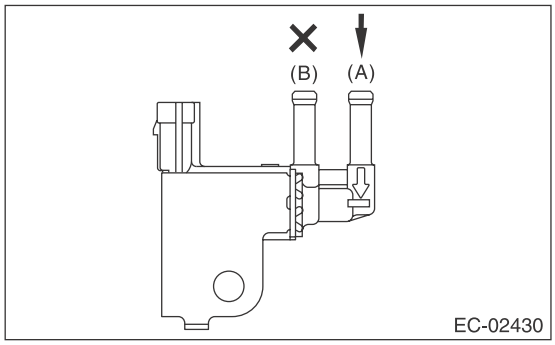

- Purge control solenoid valve 2

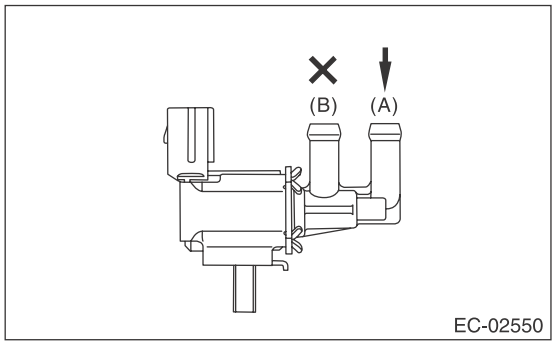

4) With terminal No. 1 connected to the battery positive terminal and terminal No. 2 to the battery ground terminal, check that air comes out from (B) when air is blown into (A).

- Purge control solenoid valve 1

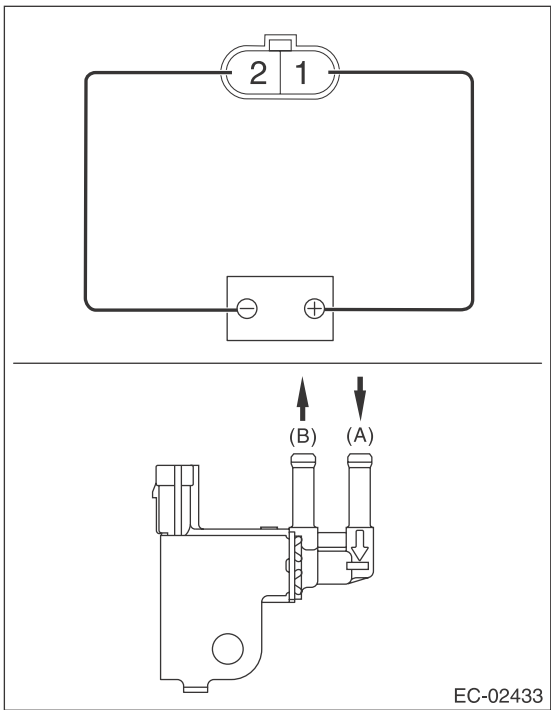

- Purge control solenoid valve 2

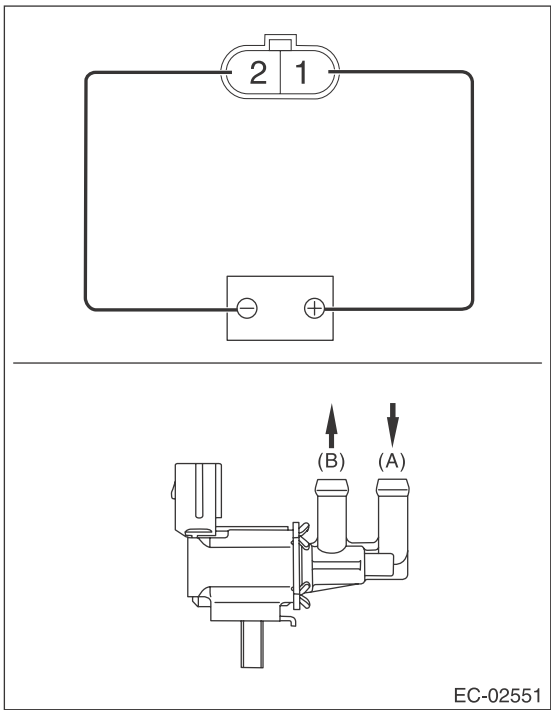

2. OTHER INSPECTIONS

Check that the evaporation hose has no cracks, damage or loose part.

6. Fuel Level Sensor

A: REMOVAL

For removal procedures, refer to the “FU (H4DOTC)” section. <Ref. to FU(H4DOTC)-80, REMOVAL, Fuel Level Sensor.>

B: INSTALLATION

For installation procedures, refer to the “FU (H4DOTC)” section. <Ref. to FU(H4DOTC)-80, INSTALLATION, Fuel Level Sensor.>

C: INSPECTION

For inspection procedures, refer to the “FU(H4DOTC)” section. <Ref. to FU(H4DOTC)-80, INSPECTION, Fuel Level Sensor.>

7. Fuel Temperature Sensor

A: REMOVAL

Fuel temperature sensor is integrated with the fuel level sensor. Refer to “Fuel Level Sensor” for removal procedure. <Ref. to FU(H4DOTC)-80, REMOVAL, Fuel Level Sensor.>

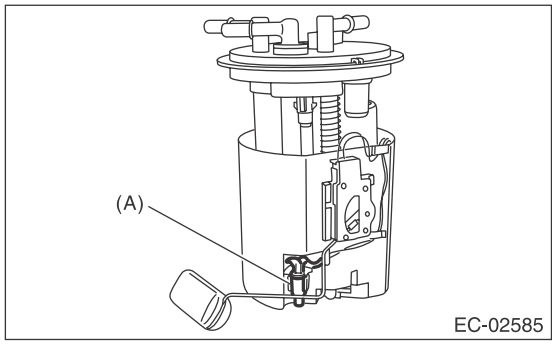

(A) Fuel temperature sensor

B: INSTALLATION

Refer to “Fuel Level Sensor” for the installation procedure. <Ref. to FU(H4DOTC)-80, INSTALLATION, Fuel Level Sensor.>

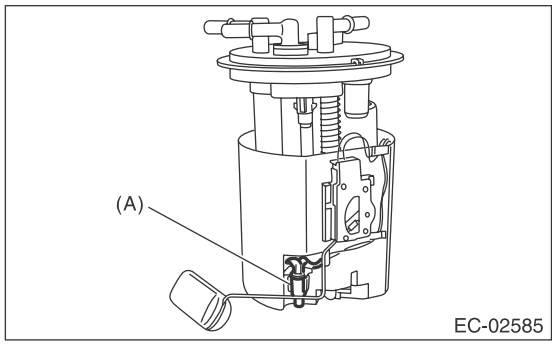

(A) Fuel temperature sensor

C: INSPECTION

1) Check the fuel temperature sensor for deformation, cracks or other damages.
2) Measure the resistance between fuel temperature sensor terminals.

CAUTION:
Make sure of the circuit tester spec and do not apply a voltage of 3 V or more when measuring the resistance. Otherwise the fuel temperature sensor will be damaged.

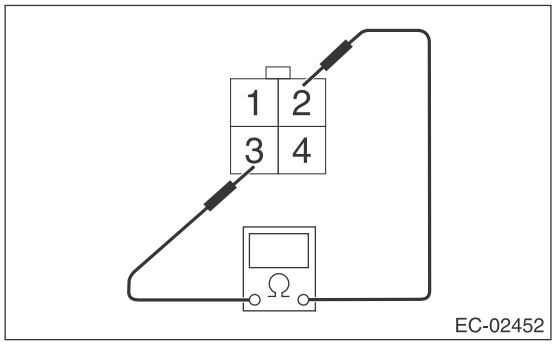

Temperature	Terminal No.	Standard
–10°C (14°F)	2 and 3	9.2±2.2 kΩ (at a set current of 0.5 mA)
20°C (68°F)		2.5±0.2 kΩ (at a set current of 1.0 mA)
50°C (122°F)		$0.84^{+0.06}_{-0.05}$ kΩ (at a set current of 1.0 mA)

8. Fuel Sub Level Sensor

A: REMOVAL

For removal procedures, refer to the “FU (H4DOTC)” section. <Ref. to FU(H4DOTC)-82, REMOVAL, Fuel Sub Level Sensor.>

B: INSTALLATION

For installation procedures, refer to the “FU(H4DOTC)” section. <Ref. to FU(H4DOTC)-83, INSTALLATION, Fuel Sub Level Sensor.>

C: INSPECTION

For inspection procedures, refer to the “FU(H4DOTC)” section. <Ref. to FU(H4DOTC)-83, INSPECTION, Fuel Sub Level Sensor.>

9. Fuel Tank Pressure Sensor

A: REMOVAL

WARNING:
Place "NO OPEN FLAMES" signs near the working area.

1) Disconnect the ground cable from battery.

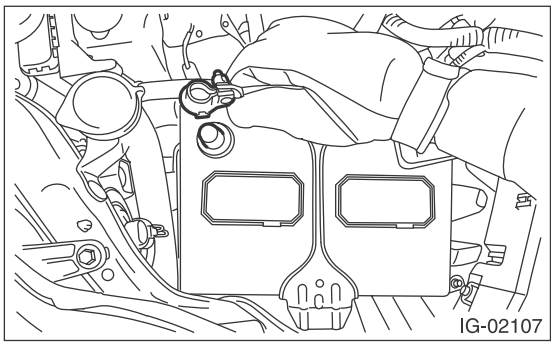

2) Open the fuel filler lid and remove the fuel filler cap.
3) Lift up the vehicle.
4) Disconnect connector (A) from fuel tank pressure sensor.
5) Pull out the vacuum hose (B) from vehicle.
6) Remove the fuel tank pressure sensor from the bracket.

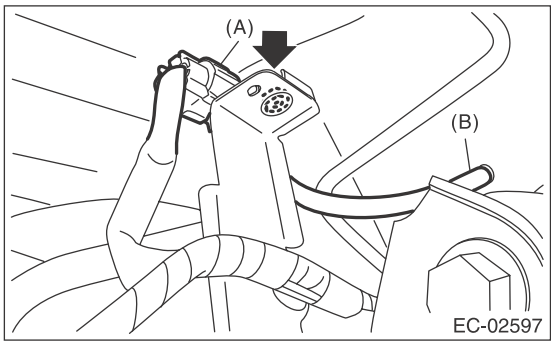

7) Disconnect the pressure hose from fuel tank pressure sensor and remove the fuel tank pressure sensor.

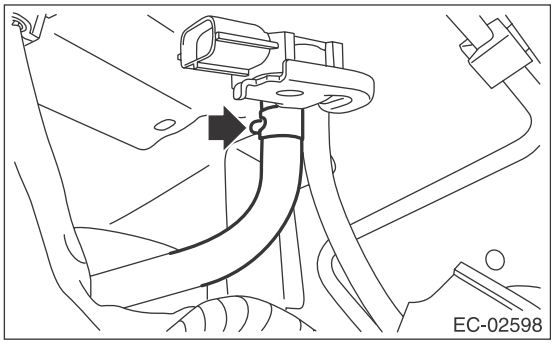

B: INSTALLATION

Install in the reverse order of removal.

Tightening torque:
7.35 N·m (0.7 kgf-m, 5.4 ft-lb)

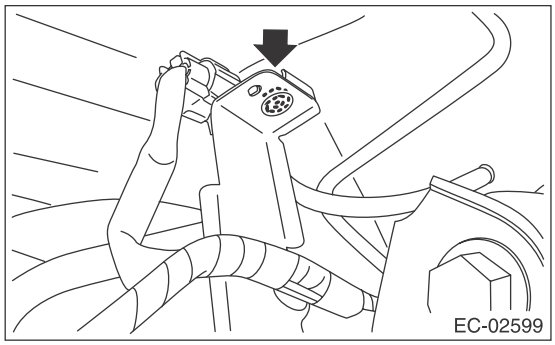

C: INSPECTION

1. FUEL TANK PRESSURE SENSOR

1) Check that the fuel tank pressure sensor does not have deformation, cracks or other damages.
2) Connect dry-cell battery positive terminal to terminal No. 3 and dry-cell battery ground terminal to terminal No. 1, circuit tester positive terminal to terminal No. 2 and the circuit tester negative terminal to terminal No. 1.

NOTE:
- Use new dry-cell batteries.
- Using circuit tester, check the voltage of a single dry-cell battery is 1.6 V or more. And also check the voltage of three batteries in series is between 4.8 V and 5.2 V.

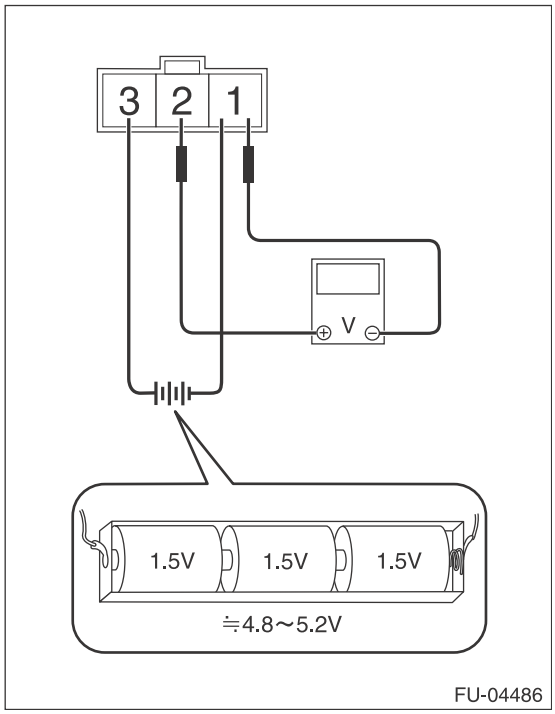

3) Check the voltage at a normal atmospheric pressure.

NOTE:
The atmospheric pressure at higher altitude is lower than normal. Therefore, the voltage is lower than the standard value.

Terminal No.	Standard
2 (+) and 1 (–)	Approx. 2.5 V (when 25°C (77°F))

4) Connect the Mighty Vac to the pressure port (A) on the fuel tank pressure sensor.

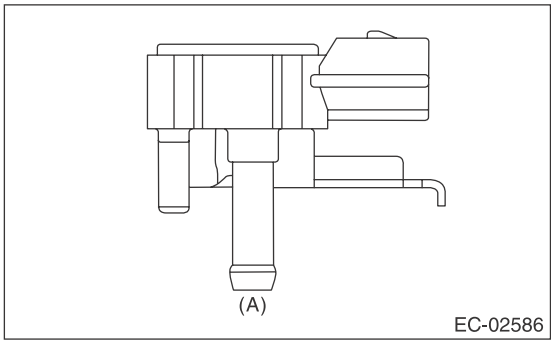

5) Check the voltage when generating vacuum and positive pressure using Mighty Vac.

CAUTION:
Be sure to apply pressure within a range of –10 — 20 kPa (–0.1 — 0.2 kgf/cm^2, –1.45 — 2.90 psi). Otherwise the fuel tank pressure sensor will be damaged.

Pressure	Terminal No.	Standard
–6.67 kPa (–0.07 kgf/cm^2, –0.97 psi)	2 (+) and 1 (–)	Approx. 0.5 V (when 25°C (77°F))
6.67 kPa (0.07 kgf/cm^2, 0.97 psi)		Approx. 4.5 V (when 25°C (77°F))

2. OTHER INSPECTIONS

Check that the hose has no cracks, damage or loose part.

10.Pressure Control Solenoid Valve

A: REMOVAL

1) Disconnect the ground cable from battery.

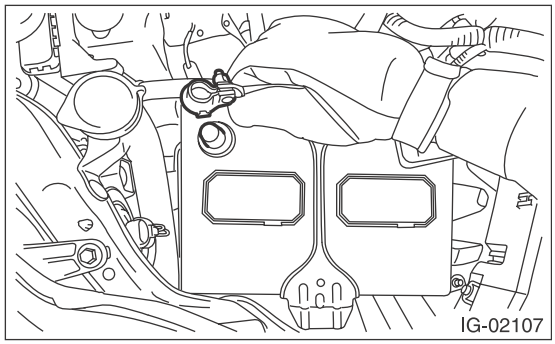

2) Lift up the vehicle.
3) Disconnect connector (A) from the pressure control solenoid valve.
4) Disconnect the PCV drain hose (B), PCV inlet hose (C) and PCV outlet hose (D) from the pressure control solenoid valve.
5) Remove the nuts securing the bracket to the fuel tank and remove the pressure control solenoid valve together with the bracket.

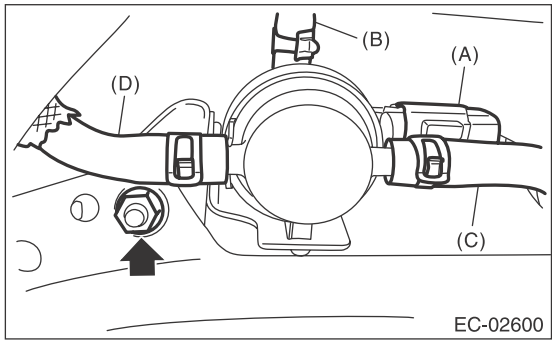

6) Remove the pressure control solenoid valve from the bracket.

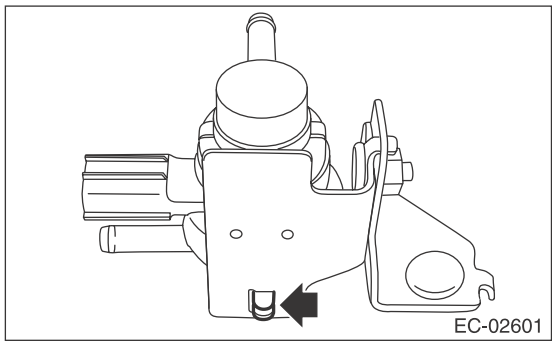

B: INSTALLATION

Install in the reverse order of removal.

Tightening torque:
7.35 N·m (0.7 kgf-m, 5.4 ft-lb)

C: INSPECTION

1. PRESSURE CONTROL SOLENOID VALVE

1) Check that the pressure control solenoid valve does not have deformation, cracks or other damages.
2) Measure the resistance between pressure control solenoid valve terminals.

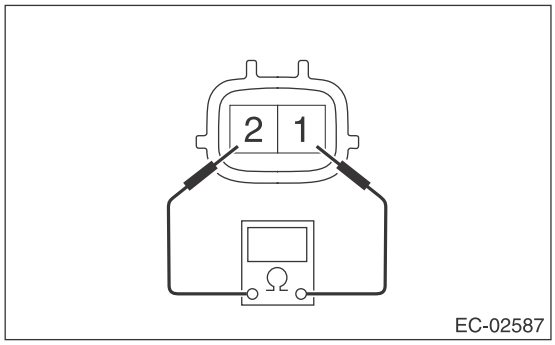

Terminal No.	Standard
1 and 2	20 — 30 Ω

2. OTHER INSPECTIONS

Check that the evaporation hose has no cracks, damage or loose part.

11.Drain Filter

A: SPECIFICATION

Drain valve is a non-disassembled part, so do not remove the drain filter from drain valve. Refer to “Canister” for removal and installation procedures. <Ref. to EC(H4DOTC)-5, REMOVAL, Canister.> <Ref. to EC(H4DOTC)-6, INSTALLATION, Canister.>

12.Shut Valve

A: REMOVAL

WARNING:
Place “NO OPEN FLAMES” signs near the working area.

CAUTION:
Be careful not to spill fuel.

1) Remove the fuel filler pipe. <Ref. to FU(H4DOTC)-74, REMOVAL, Fuel Filler Pipe.>
2) Remove the shut valve from the fuel filler pipe.

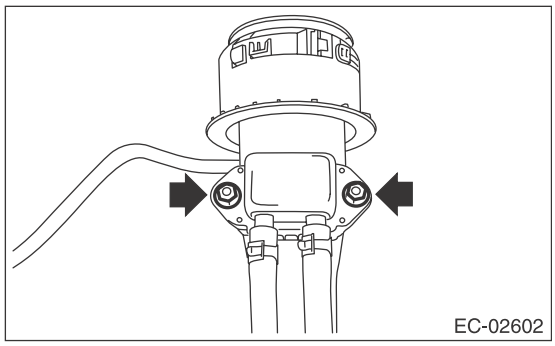

3) Disconnect the evaporation hose from shut valve and remove the shut valve.

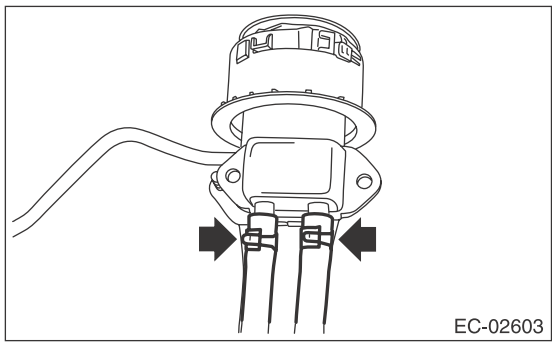

B: INSTALLATION

Install in the reverse order of removal.

Tightening torque:
4.5 N·m (0.5 kgf-m, 3.3 ft-lb)

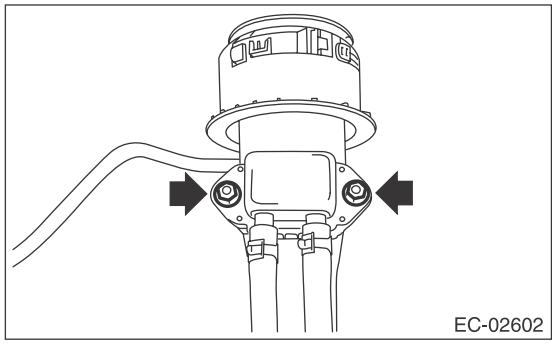

C: INSPECTION

1) Check that the shut valve does not have deformation, cracks or other damages.
2) Check that the evaporation hose has no cracks, damage or loose part.

13.Drain Valve

A: REMOVAL

Drain valve is integrated with canister. Refer to “Canister” for removal procedure. <Ref. to EC(H4DOTC)-5, REMOVAL, Canister.>

B: INSTALLATION

Refer to “Canister” for the installation procedure. <Ref. to EC(H4DOTC)-6, INSTALLATION, Canister.>

C: INSPECTION

Measure the resistance between drain valve terminals.

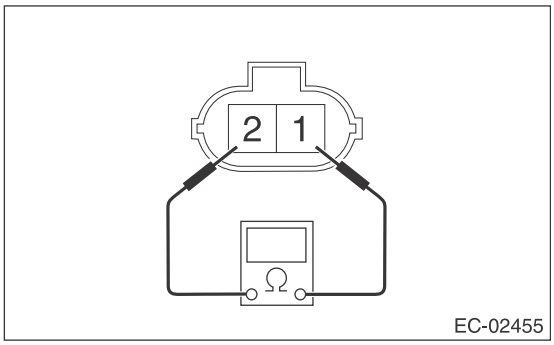

Terminal No.	Standard
1 and 2	20 — 30 Ω

14.PCV Hose Assembly

A: REMOVAL

CAUTION:
Do not remove except when the hose is broken.
1) Remove the collector cover.
2) Remove the intercooler. <Ref. to IN(H4DOTC)-17, REMOVAL, Intercooler.>
3) Disconnect the vacuum hose from intake manifold and remove the PCV hose assembly from cylinder block RH and blow-by pipe assembly.

NOTE:
Pinch the clamp of the PCV hose assembly by fitting the cut out in the ST with the protrusion on the clamp as shown in the figure, and unlock the clamp.
ST 18353AA000 CLAMP PLIERS

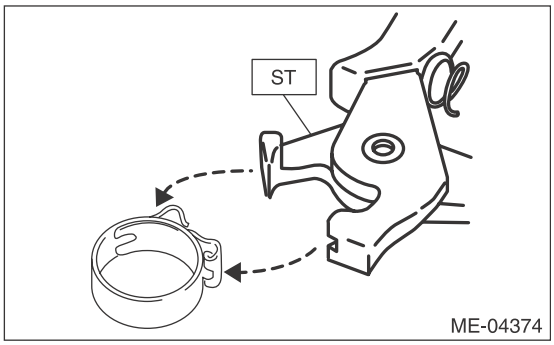

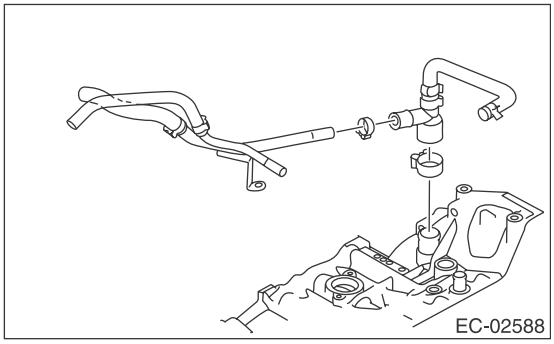

B: INSTALLATION

1) Install the PCV hose assembly to the cylinder block RH and blow-by pipe assembly and connect the vacuum hose to the intake manifold.

NOTE:
Use a new clamp for the PCV hose assembly, fit the cut out in the ST with the protrusion on the clamp as shown in the figure, and lock the clamp.
ST 18353AA000 CLAMP PLIERS

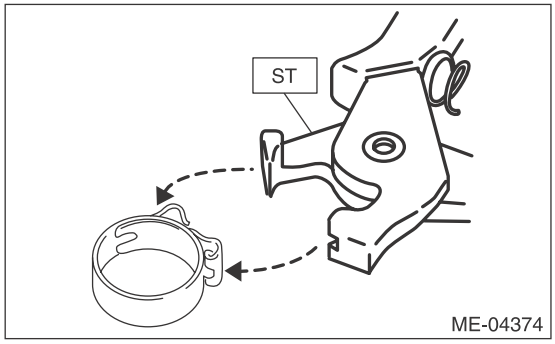

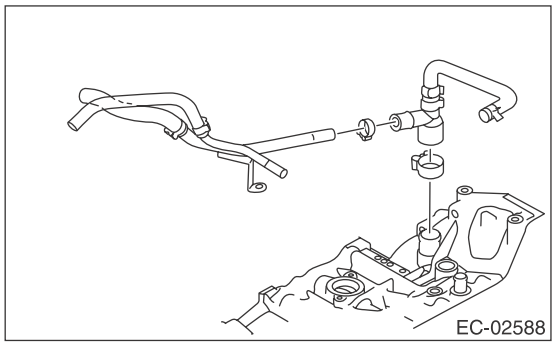

2) Install the intercooler. <Ref. to IN(H4DOTC)-18, INSTALLATION, Intercooler.>
3) Install the collector cover.

C: INSPECTION

Check the PCV hose assembly for cracks, damage or looseness.

15.PCV Valve

A: REMOVAL

1) Remove the collector cover.
2) Remove the intercooler. <Ref. to IN(H4DOTC)-17, REMOVAL, Intercooler.>
3) Disconnect the vacuum hose (A) and vacuum hose (B) from the PCV valve and remove the PCV valve.

NOTE:
Pinch the clamp of the vacuum hose (B) by fitting the cut out in the ST with the protrusion on the clamp as shown in the figure, and unlock the clamp.
ST 18353AA000 CLAMP PLIERS

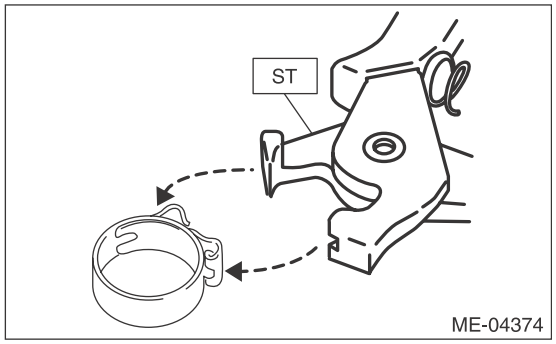

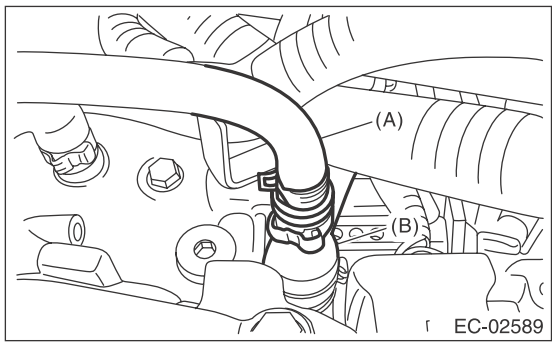

B: INSTALLATION

1) Connect the vacuum hose (A) and vacuum hose (B) to the PCV valve.

NOTE:
Use a new clamp for the vacuum hose (B), fit the cut out in the ST with the protrusion on the clamp as shown in the figure, and lock the clamp.
ST 18353AA000 CLAMP PLIERS

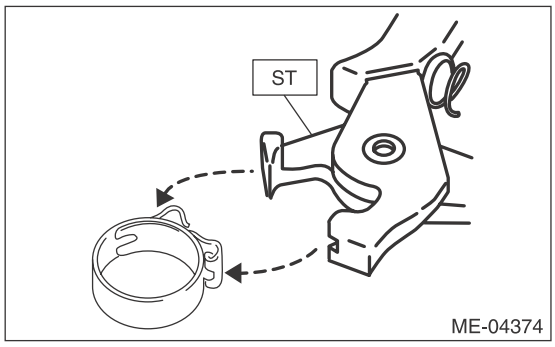

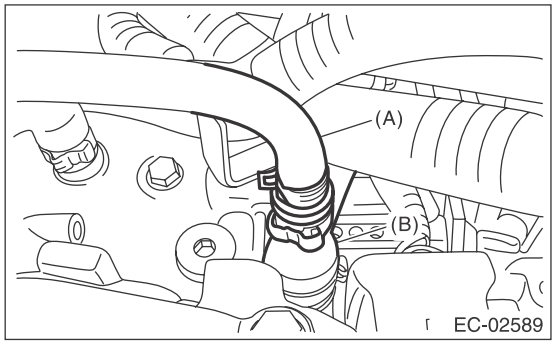

2) Install the intercooler. <Ref. to IN(H4DOTC)-18, INSTALLATION, Intercooler.>
3) Install the collector cover.

C: INSPECTION

1. PCV VALVE

1) Check that the PCV valve has no deformation, cracks or other damages.
2) Check that air is discharged from (B) when air is blown into (A).

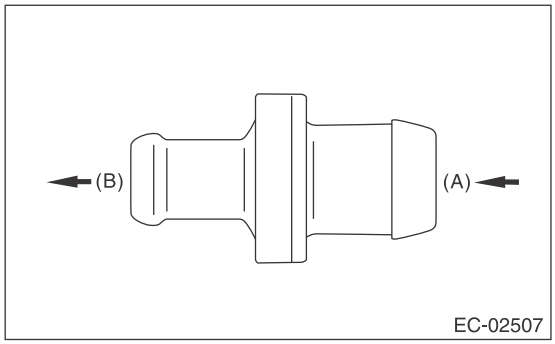

3) Check that air does not come out from (B) when air is blown into (A).

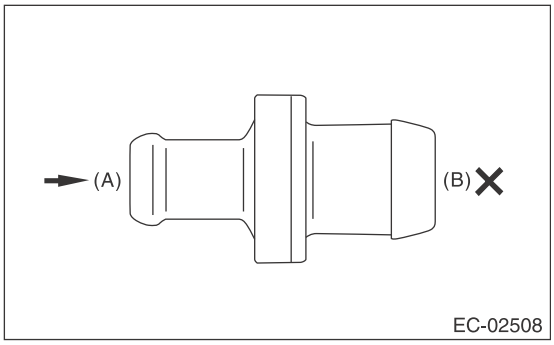

2. OTHER INSPECTIONS

Check the vacuum hose for cracks, damage or looseness.

INTAKE (INDUCTION)

IN(H4DOTC)

		Page
1.	General Description	2
2.	Air Cleaner Element	7
3.	Air Cleaner Case	8
4.	Air Intake Boot	10
5.	Air Intake Duct	12
6.	Intake Duct	13
7.	Intercooler	17
8.	Turbocharger	20
9.	Oil Catch Tank	23
10.	Scavenge Pump	24
11.	Air By-pass Valve	25
12.	Resonator Chamber	27

1. General Description

A: COMPONENT

1. AIR CLEANER

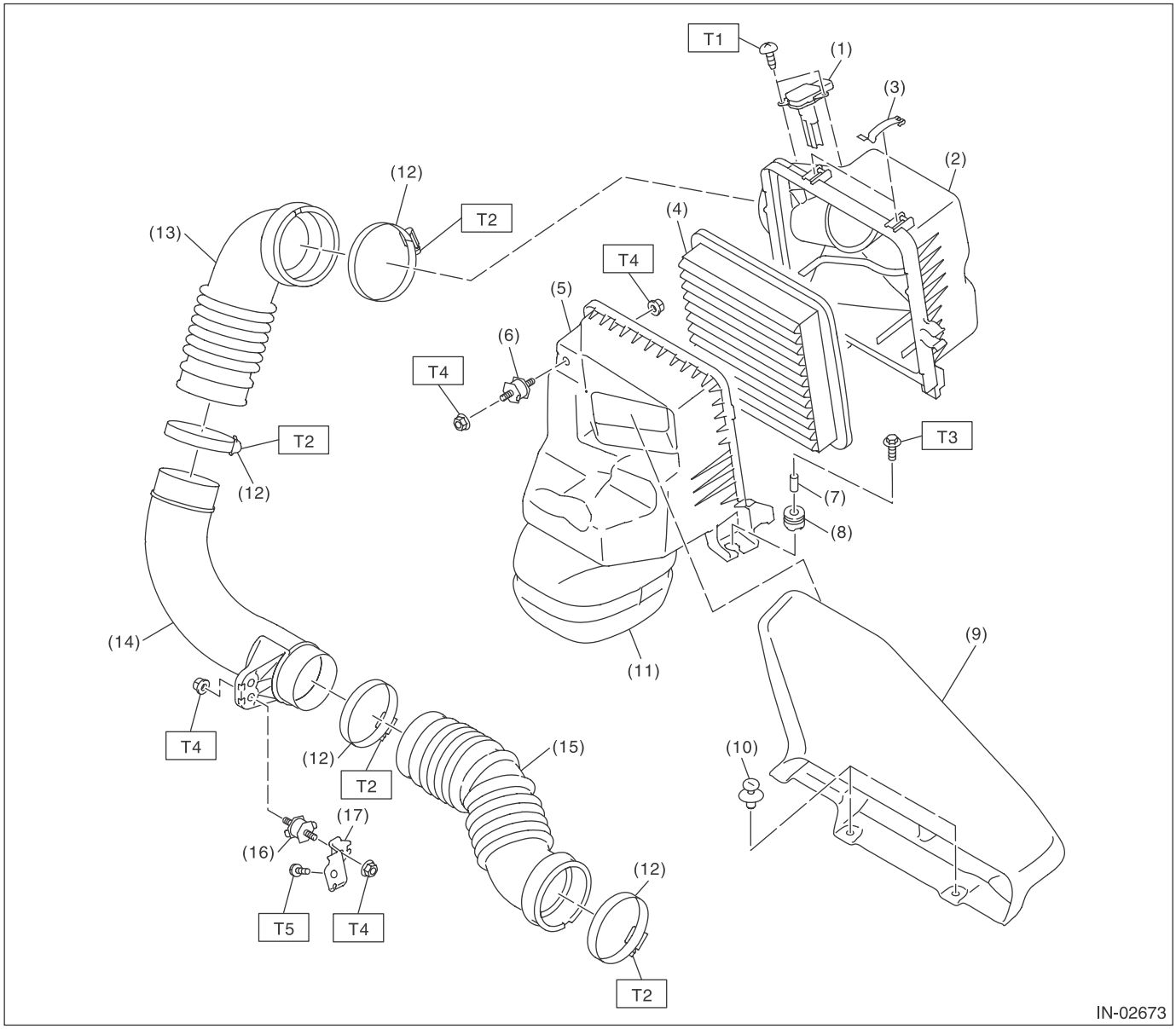

(1)	Mass air flow and intake air temperature sensor	(9)	Air intake duct	(17)	Duct bracket
(2)	Air cleaner case (rear)	(10)	Clip		
(3)	Clip	(11)	Resonator chamber	***Tightening torque:N·m (kgf-m, ft-lb)***	
(4)	Air cleaner element	(12)	Clamp	***T1:***	***1 (0.1, 0.7)***
(5)	Air cleaner case (front)	(13)	Air intake boot A	***T2:***	***2.5 (0.3, 1.8)***
(6)	Cushion	(14)	Turbo duct	***T3:***	***6 (0.6, 4.4)***
(7)	Spacer	(15)	Air intake boot B	***T4:***	***7.5 (0.8, 5.5)***
(8)	Cushion	(16)	Cushion	***T5:***	***18 (0.8, 13.3)***

2. INTAKE DUCT

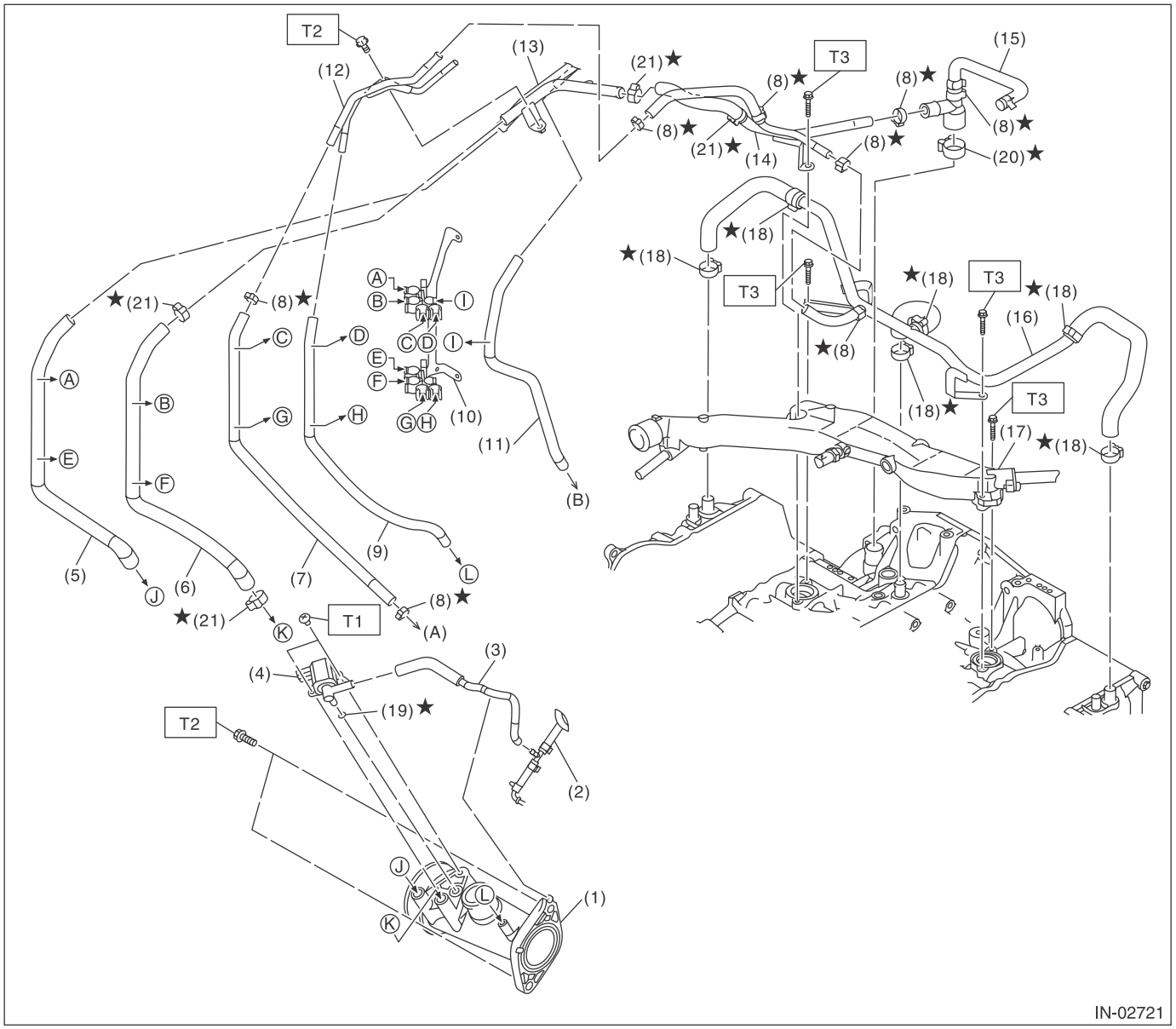

(A)	To Oil catch tank	(B)	To air by-pass valve		
(1)	Intake duct	(10)	Hose clip stay ASSY	(19)	O-ring
(2)	Boost hose ASSY	(11)	Vacuum control hose	(20)	Clamp
(3)	Air control hose	(12)	Blow-by pipe	(21)	Clamp
(4)	Wastegate control solenoid valve	(13)	PCV pipe		
(5)	Vacuum hose A	(14)	Blow-by pipe ASSY A		
(6)	Vacuum hose B	(15)	PCV hose ASSY		
(7)	Vacuum hose C	(16)	Blow-by pipe ASSY B		
(8)	Clamp	(17)	Water pipe ASSY		
(9)	Vacuum hose D	(18)	Clamp		

Tightening torque:N·m (kgf-m, ft-lb)	
T1:	*1 (0.1, 0.7)*
T2:	*6.4 (0.7, 4.7)*
T3:	*6.5 (0.7, 4.8)*

3. INTERCOOLER

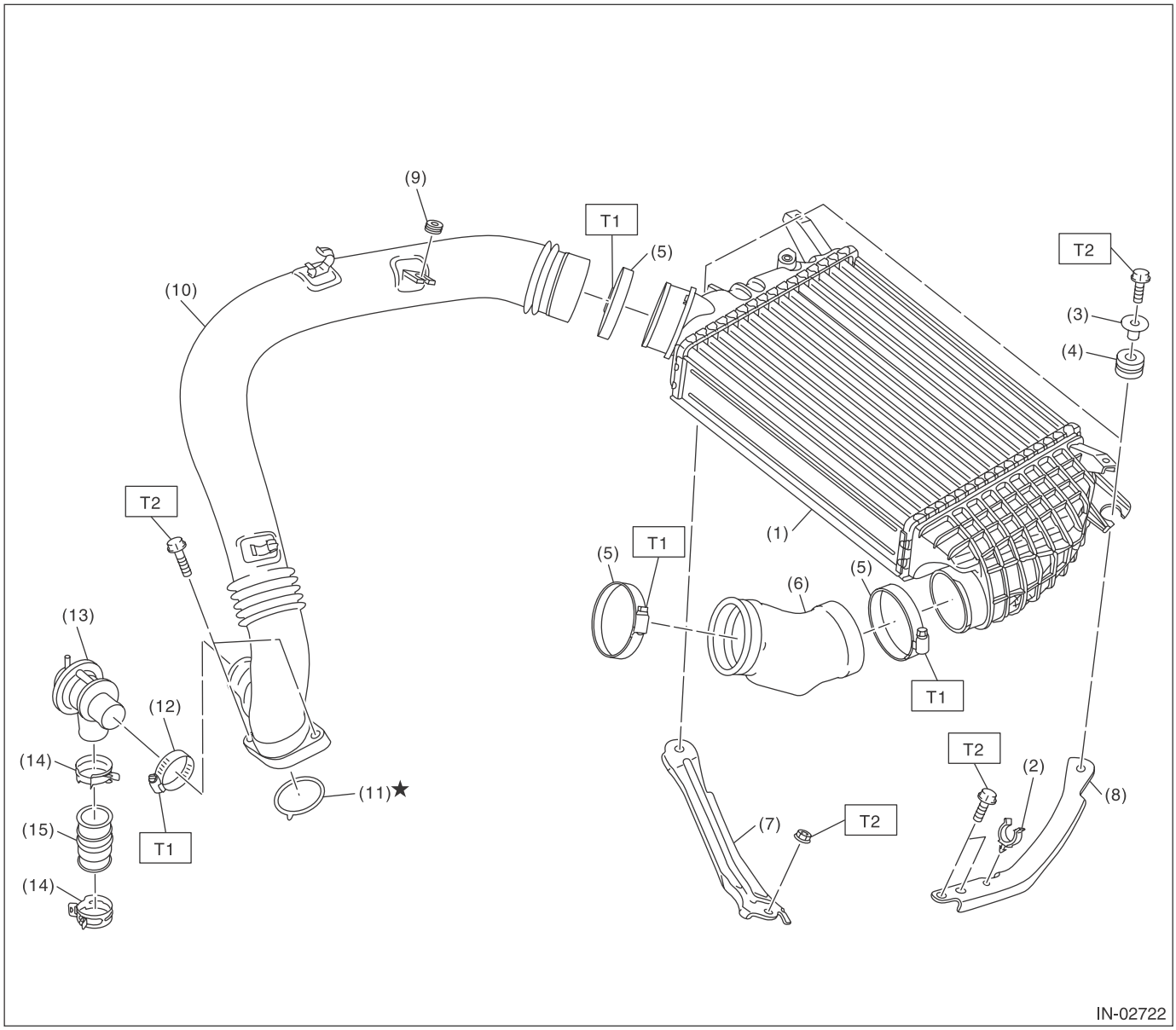

(1) Intercooler
(2) Clip
(3) SPACER
(4) Cushion
(5) Clamp
(6) Intake duct A
(7) Intercooler stay RH
(8) Intercooler stay LH
(9) Cushion
(10) Intake duct B
(11) O-ring
(12) Clamp
(13) Air by-pass valve
(14) Clip
(15) Intake boot

Tightening torque:N·m (kgf-m, ft-lb)
T1: 3 (0.3, 2.2)
T2: 16 (1.6, 11.8)

4. TURBOCHARGER

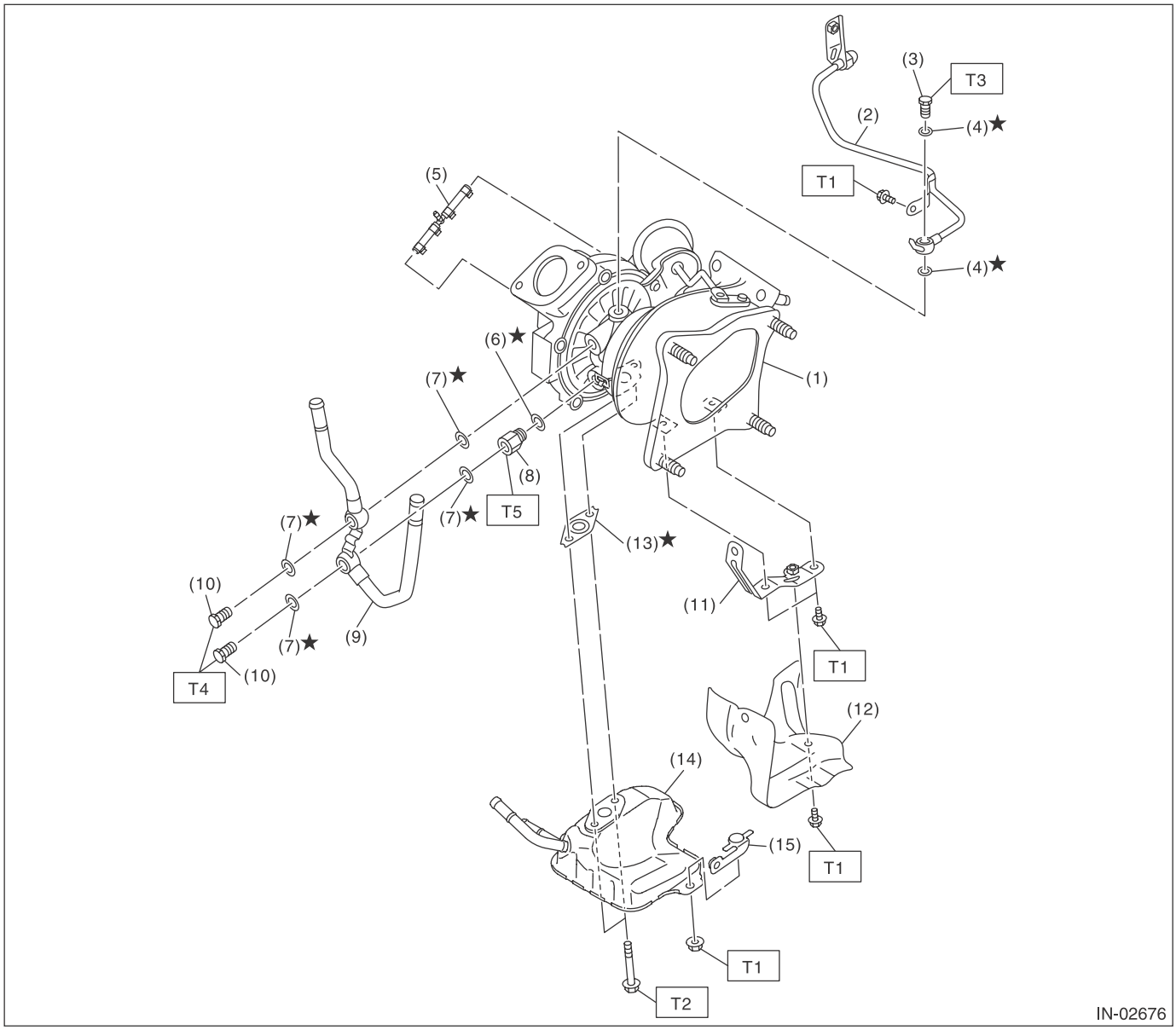

(1) Turbocharger
(2) Oil inlet pipe
(3) Union bolt
(4) Gasket
(5) Boost hose ASSY
(6) Gasket
(7) Gasket
(8) Water pipe connector
(9) Water pipe
(10) Union bolt
(11) Exhaust stay
(12) Exhaust cover
(13) Gasket
(14) Oil catch tank
(15) Oil catch tank stay

Tightening torque:N·m (kgf-m, ft-lb)
T1: 6.4 (0.7, 4.7)
T2: 10.5 (1.1, 7.7)
T3: 16 (1.6, 11.8)
T4: 31.5 (3.2, 23.2)
T5: 36.5 (3.7, 26.9)

B: CAUTION

• Wear appropriate work clothing, including a cap, protective goggles and protective shoes when performing any work.
• Remove contamination including dirt and corrosion before removal, installation or disassembly.
• Keep the disassembled parts in order and protect them from dust and dirt.
• Before removal, installation or disassembly, be sure to clarify the failure. Avoid unnecessary removal, installation, disassembly and replacement.
• Vehicle components are extremely hot after driving. Be wary of receiving burns from heated parts.
• Be sure to tighten fasteners including bolts and nuts to the specified torque.
• Place shop jacks or rigid racks at the specified points.
• Before disconnecting connectors of sensors or units, be sure to disconnect the ground cable from the battery.

C: PREPARATION TOOL

1. SPECIAL TOOL

ILLUSTRATION	TOOL NUMBER	DESCRIPTION	REMARKS
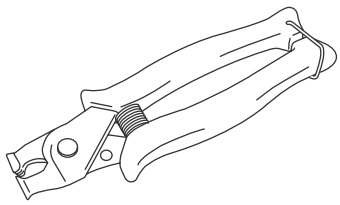 ST18353AA000	18353AA000	CLAMP PLIERS	• Used for removing and installing the PCV hose. • This tool is made by the French company CAILLAU. (code) 54.0.000.205 To make it easier to obtain, it has been provided with a tool number.

2. GENERAL TOOL

TOOL NAME	REMARKS
Mighty Vac	Used for checking waste gate actuator and air by-pass valve.

2. Air Cleaner Element

A: REMOVAL

1) Remove the suction hose from intake duct and air cleaner case (rear).

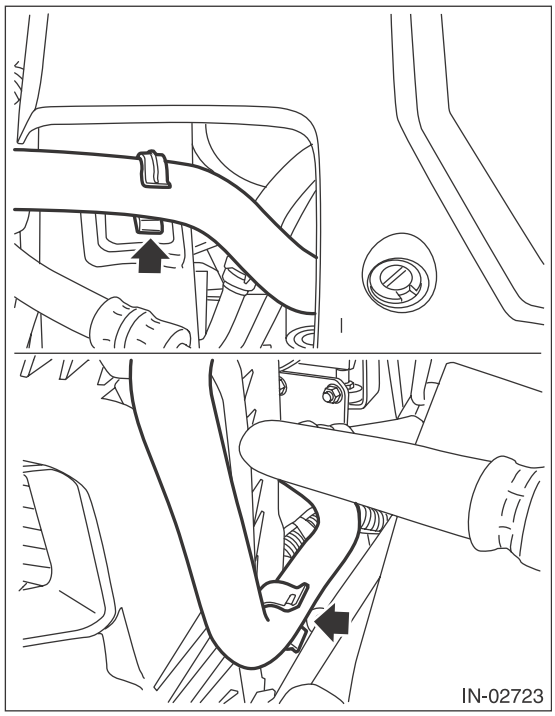

2) Remove the clip (A) from the air cleaner case (front).

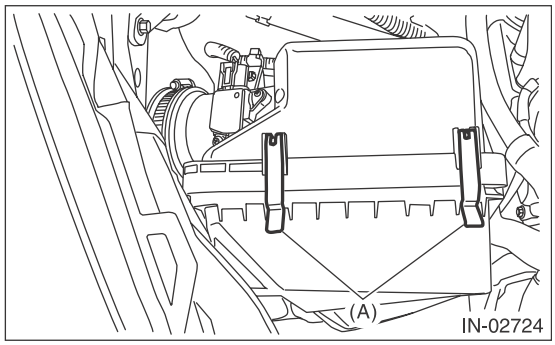

3) Open the air cleaner case to remove the air cleaner element.

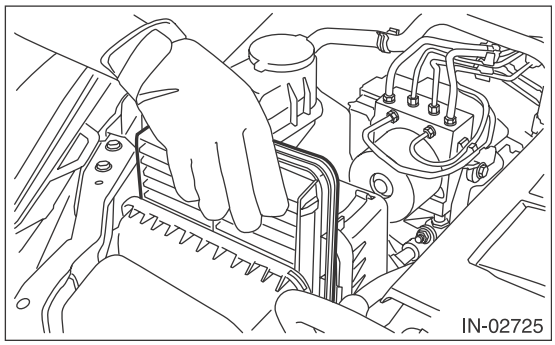

B: INSTALLATION

Install in the reverse order of removal.

CAUTION:
Be sure to use SUBARU genuine air cleaner element depending on the engine type when replacing the air cleaner elements. Using other air cleaner element may affect the engine performance.

NOTE:
- Check that there are no foreign objects in the air cleaner case.
- If the protrusion of the air cleaner case (rear) is removed when removing the air cleaner element, align the protrusion of the air cleaner case (rear) to the hole on the air cleaner case (front) to install.

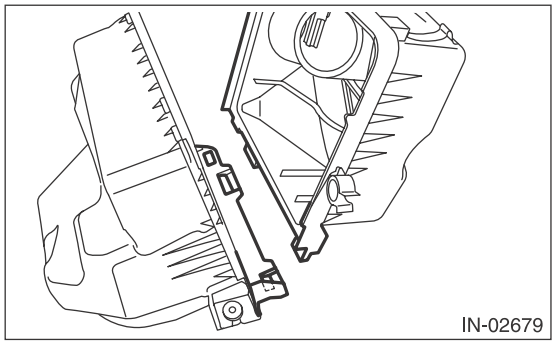

C: INSPECTION

1) Check that the air cleaner element has no deformation, cracks or other damages.
2) Check the air cleaner element for excessive dirt.

3. Air Cleaner Case

A: REMOVAL

1) Disconnect the ground cable from battery.

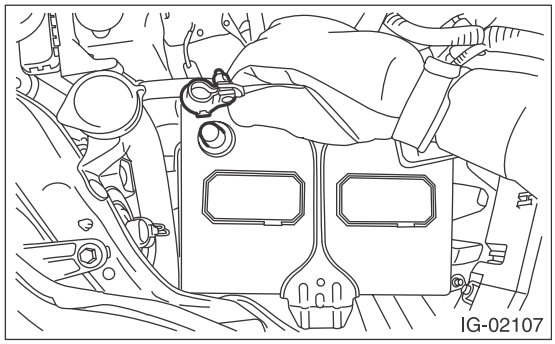

2) Remove the air intake duct. <Ref. to IN(H4DOTC)-12, REMOVAL, Air Intake Duct.>
3) Remove the suction hose from intake duct and air cleaner case (rear).

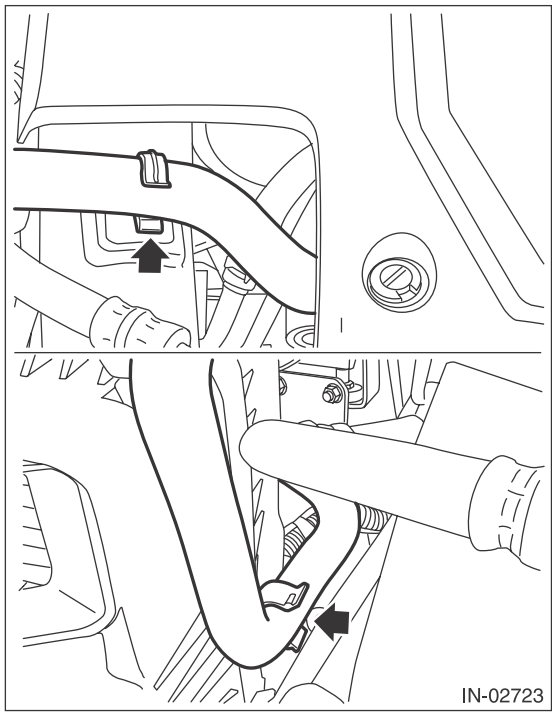

4) Disconnect the connector (A) from the mass air flow and intake air temperature sensor, and remove the clip (B) which holds the mass air flow and intake air temperature sensor harness.
5) Loosen the clamp (C) which holds the air intake boot.
6) Remove the clip (D) from the air cleaner case (front), and remove the air cleaner case (rear).

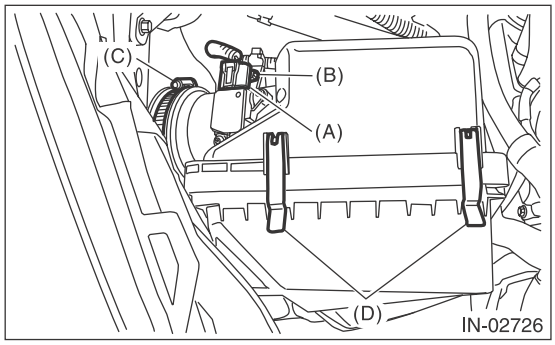

7) Remove the air cleaner element.
8) Remove bolts (A) and nuts (B) which secure the air cleaner case (front) to the body, and remove the air cleaner case (front).

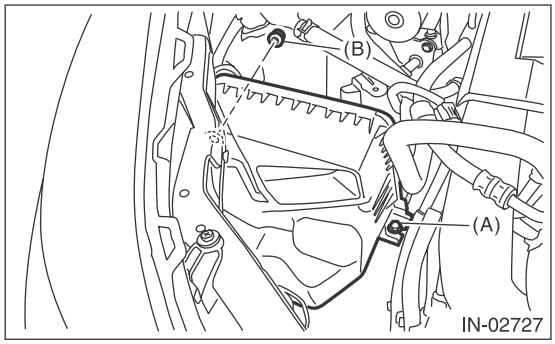

B: INSTALLATION

1) Install the bolt (A) and nut (B) which secure the air cleaner case (front) to the body.

Tightening torque:
Bolt (A)
6 N·m (0.6 kgf-m, 4.4 ft-lb)
Nut (B)
7.5 N·m (0.8 kgf-m, 5.5 ft-lb)

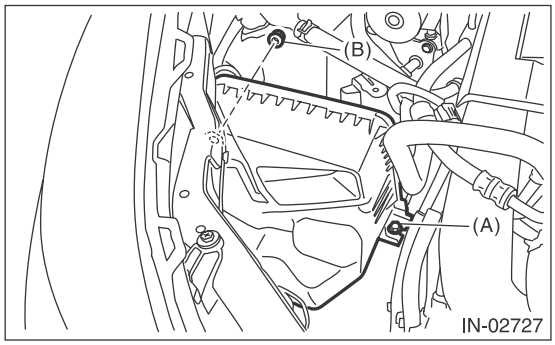

2) Install the air cleaner element.
3) Install the air intake case (rear).

NOTE:
When installing the air cleaner case (rear), align the protrusion of the air cleaner case (rear) to the hole on the air cleaner case (front) to install.

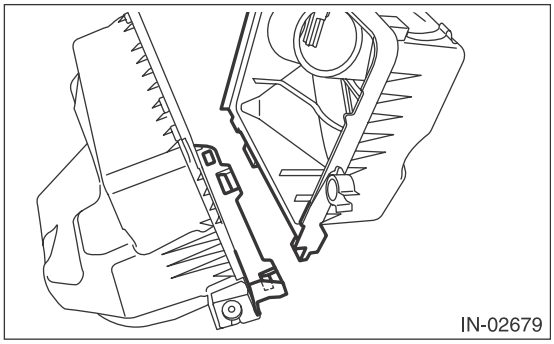

4) Install the clip (A) to the air cleaner case (front).
5) Hold the mass air flow and intake air temperature sensor harness with the clip (B), and connect the connector (C) to the mass air flow and intake air temperature sensor.

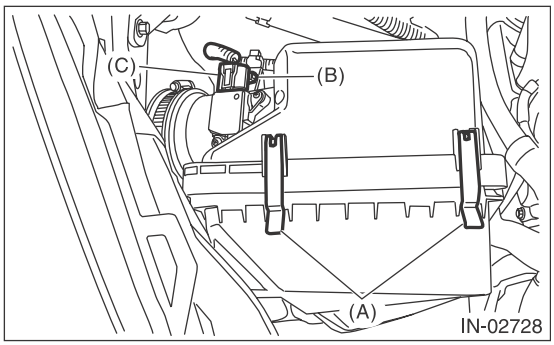

6) Tighten the clamp which secures the air intake boot.

Tightening torque:
2.5 N·m (0.3 kgf-m, 1.8 ft-lb)

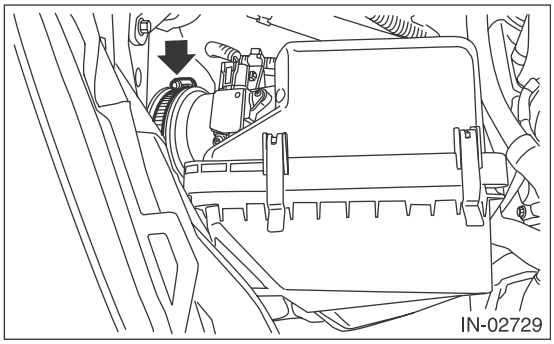

7) Install the suction hose to intake duct and air cleaner case (rear).

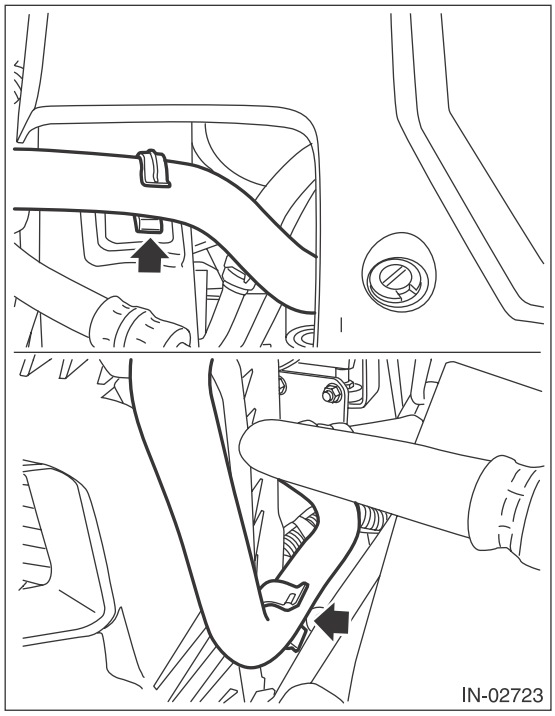

8) Install the air intake duct. <Ref. to IN(H4DOTC)-12, INSTALLATION, Air Intake Duct.>
9) Connect the ground cable to battery.

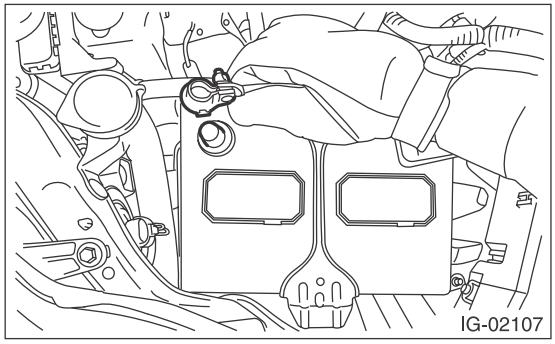

C: INSPECTION

Check that the air cleaner case has no deformation, cracks or other damages.

4. Air Intake Boot

A: REMOVAL

1) Disconnect the ground cable from battery.

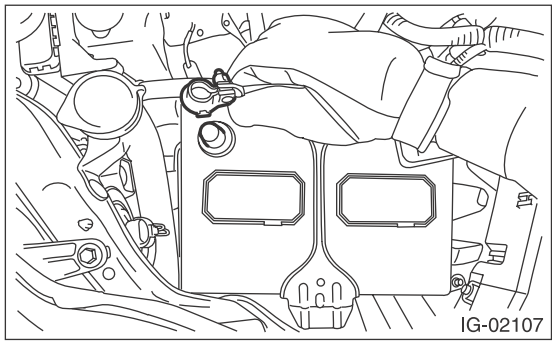

2) Remove the air intake duct. <Ref. to IN(H4DOTC)-12, REMOVAL, Air Intake Duct.>
3) Remove the air cleaner case. <Ref. to IN(H4DOTC)-8, REMOVAL, Air Cleaner Case.>
4) Lift up the vehicle.
5) Remove the under cover. <Ref. to EI-35, REMOVAL, Front Under Cover.>
6) Remove the intake duct from the air intake boot.

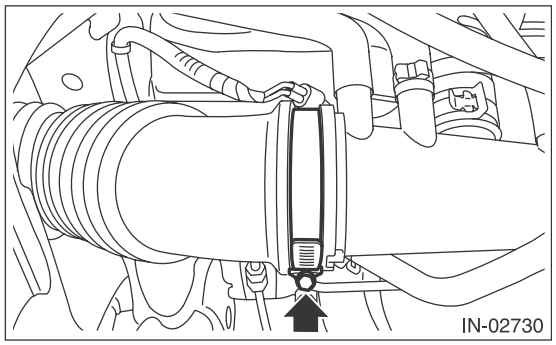

7) Lower the vehicle.
8) Remove the nuts which secure the air intake boot to the vehicle, and remove the air intake boot from the upper side of the vehicle.

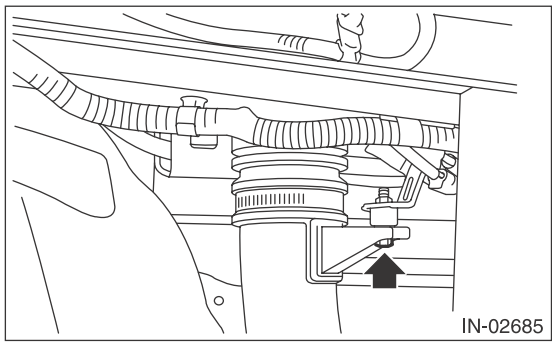

B: INSTALLATION

Install in the reverse order of removal.

NOTE:
When installing the air intake boot to the vehicle, pay attention to the mounting hole position, and align the protrusion for stopping rotation of cushion to the cutout portion on the turbo duct.

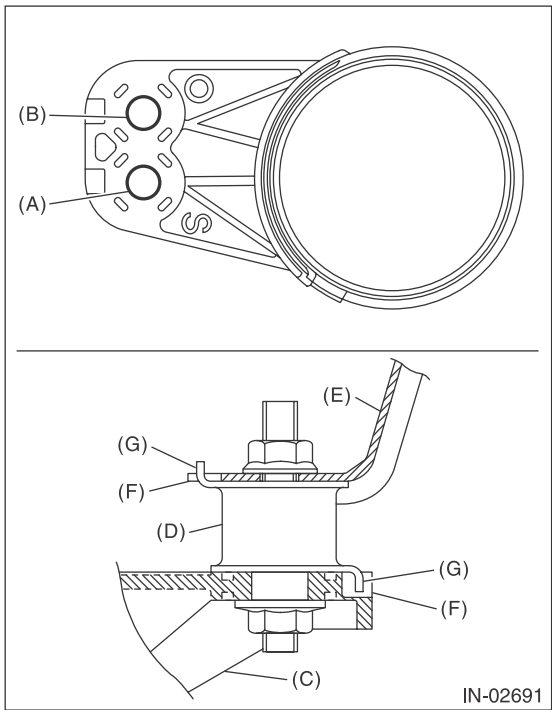

(A) Attachment hole
(B) Not used
(C) Turbo duct
(D) Cushion
(E) Duct bracket
(F) Cutout portion
(G) Protrusion portion

Tightening torque:
7.5 N·m (0.8 kgf-m, 5.5 ft-lb)

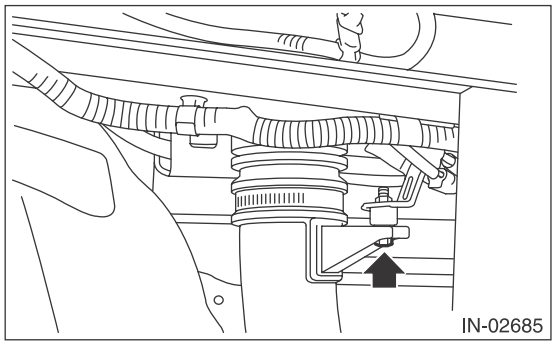

Tightening torque:
2.5 N·m (0.3 kgf-m, 1.8 ft-lb)

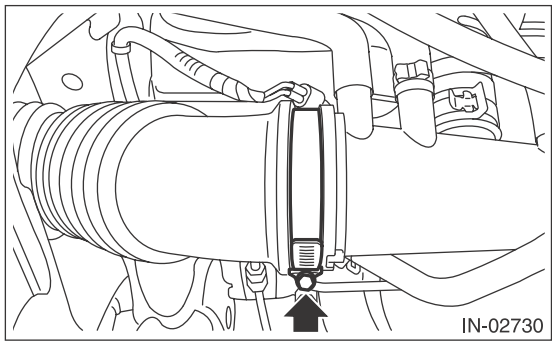

C: DISASSEMBLY

Remove the air intake boot from the turbo duct.

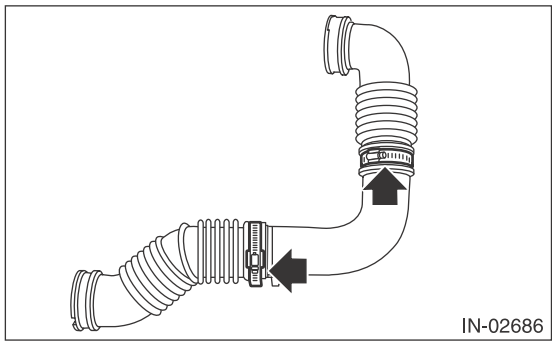

D: ASSEMBLY

Install the air intake boot to the turbo duct.

Tightening torque:
2.5 N·m (0.3 kgf-m, 1.8 ft-lb)

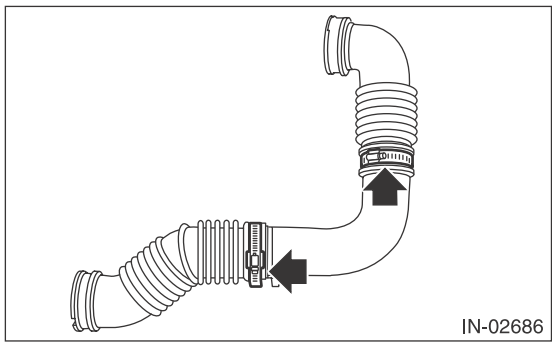

E: INSPECTION

Check that the air intake boot and turbo duct have no cracks, damage or loose part.

5. Air Intake Duct

A: REMOVAL

Remove the clip which secures air intake duct then remove the air intake duct.

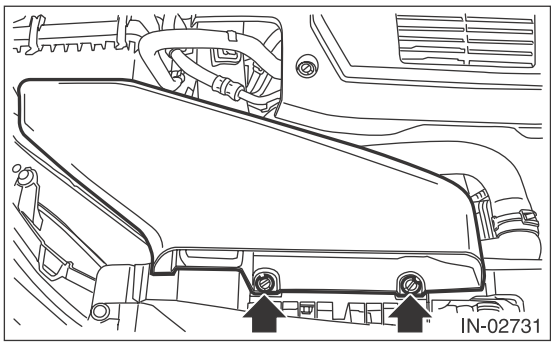

B: INSTALLATION

Install in the reverse order of removal.

C: INSPECTION

1) Check that the air intake duct has no deformation, cracks or other damages.
2) Inspect that no foreign objects are mixed in the air intake duct.

6. Intake Duct

A: REMOVAL

1) Remove the collector cover.
2) Disconnect the ground cable from battery.

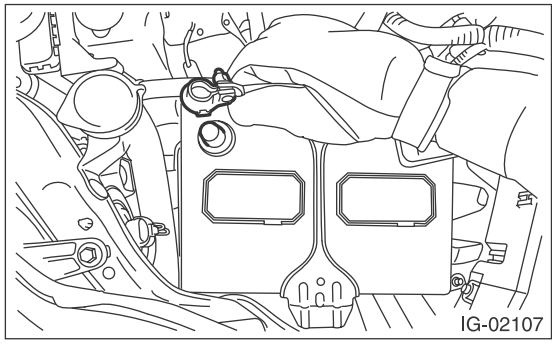

3) Disconnect the vacuum hose from PCV pipe.

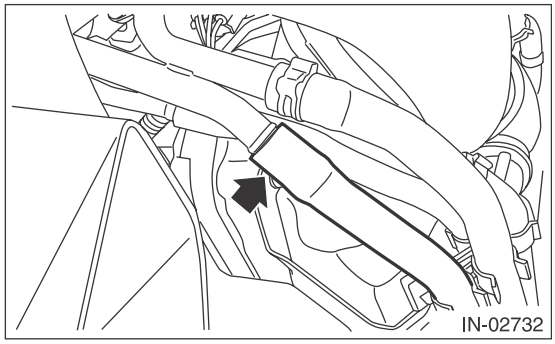

4) Disconnect the vacuum hose (A) from blow-by pipe and remove the vacuum hose (A) and vacuum hose (C).

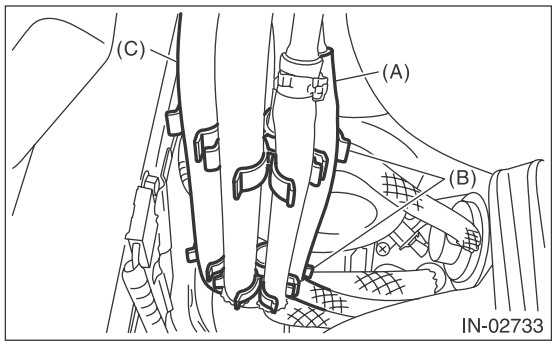

5) Lift up the vehicle.
6) Remove the under cover. <Ref. to EI-35, REMOVAL, Front Under Cover.>
7) Disconnect the connector from the wastegate control solenoid valve.

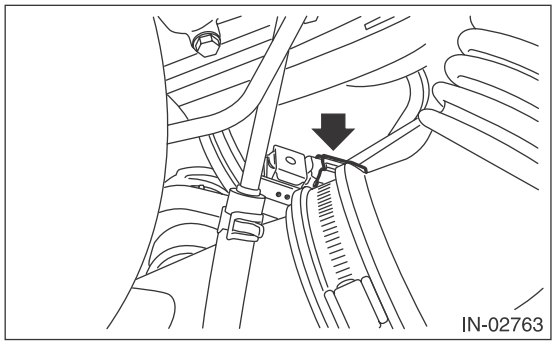

8) Loosen the clamp (A) securing the air intake boot to the intake duct, and remove the air intake boot from intake duct.
9) Disconnect the vacuum hose (B) from intake duct, and unlock the clip (C) securing the air by-pass valve to the intake duct.

NOTE:
Pinch the clamp of the vacuum hose (B) by fitting the cut out in the ST with the protrusion on the clamp as shown in the figure, and unlock the clamp.
ST 18353AA000 CLAMP PLIERS

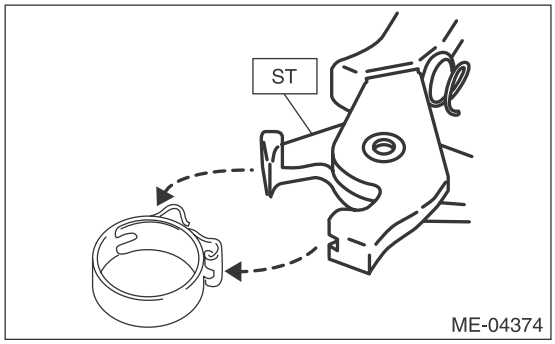

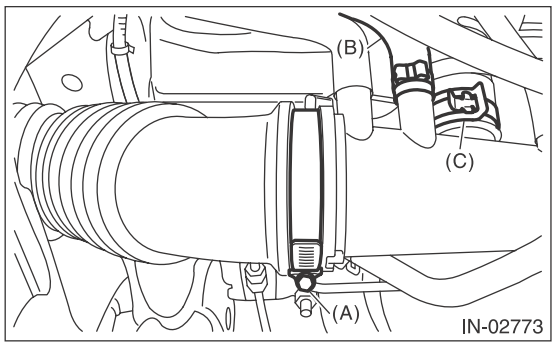

10) Disconnect the air control hose (A).

11) Remove the bolts which secure the intake duct to the turbocharger, and remove the intake duct.

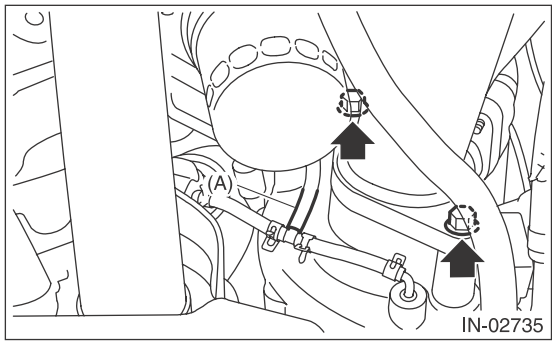

B: INSTALLATION

1) Install the bolts which secure the intake duct to the turbocharger, and connect the air control hose (A).

NOTE:
- Use new O-rings.
- Be careful not to pinch the O-ring.

Tightening torque:
6.4 N·m (0.7 kgf-m, 4.7 ft-lb)

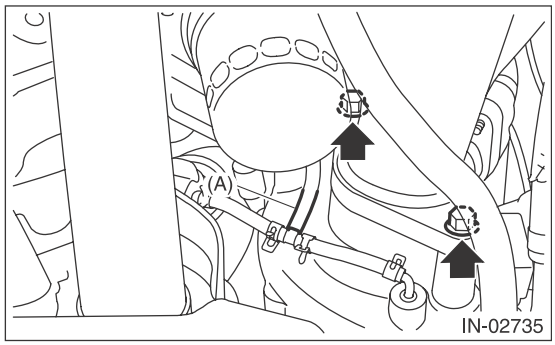

2) Install the air by-pass valve and air intake boot to the intake duct, and connect the vacuum hose to the intake duct.

NOTE:
Use a new clamp for the vacuum hose, fit the cut out in the ST with the protrusion on the clamp as shown in the figure, and lock the clamp.
ST 18353AA000 CLAMP PLIERS

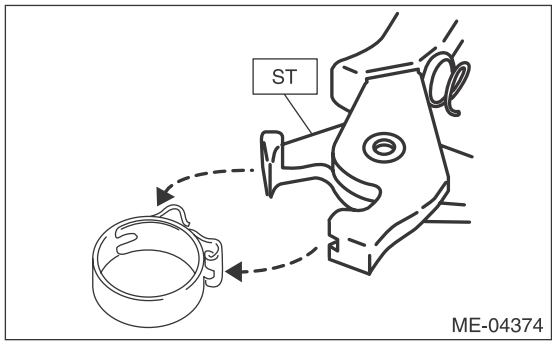

Tightening torque:
2.5 N·m (0.3 kgf-m, 1.8 ft-lb)

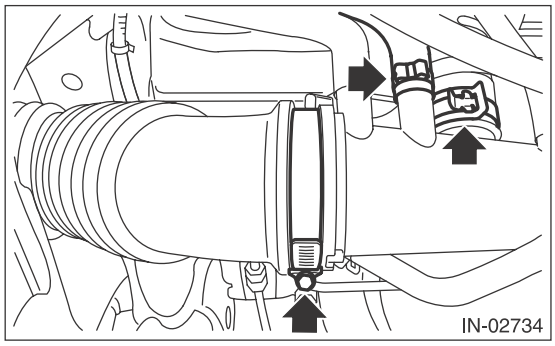

3) Connect the connector to the wastegate control solenoid valve.

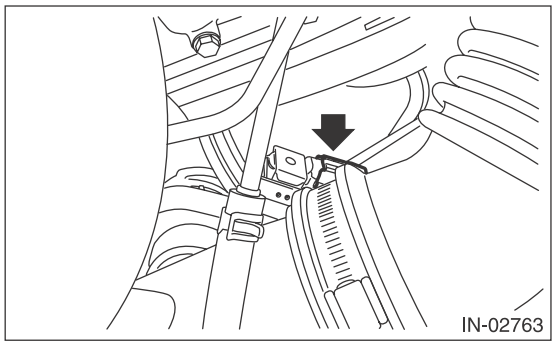

4) Install the under cover. <Ref. to EI-35, INSTALLATION, Front Under Cover.>
5) Lower the vehicle.
6) Install the vacuum hose (A) and vacuum hose (C) to the clip (B), and connect the vacuum hose (A) to the blow-by pipe.

NOTE:
Install the vacuum hose as shown in the figure.

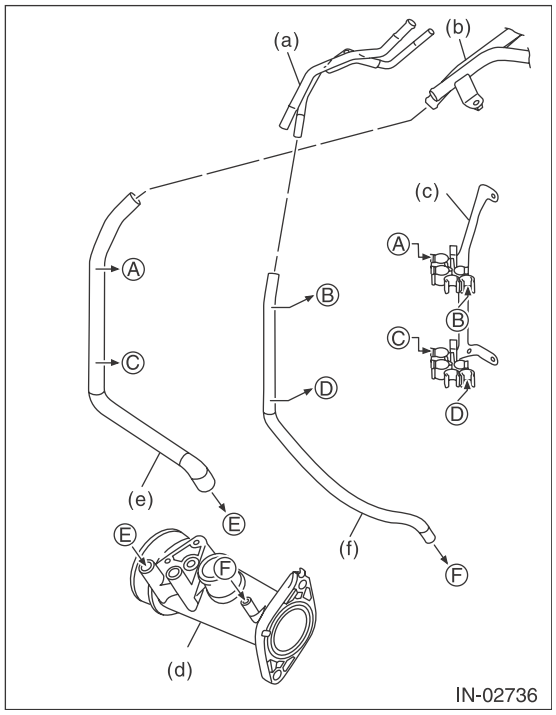

(a) Blow-by pipe
(b) PCV pipe
(c) Hose clip stay ASSY
(d) Intake duct
(e) Vacuum hose (C)
(f) Vacuum hose (A)

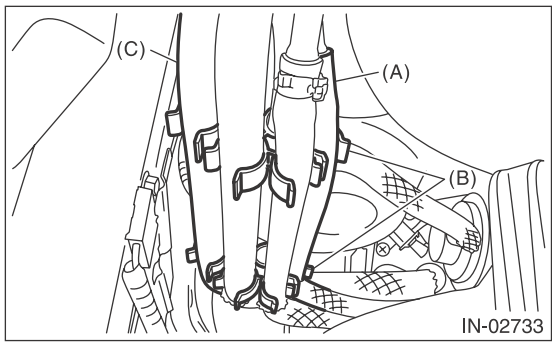

7) Connect the vacuum hose to PCV pipe.

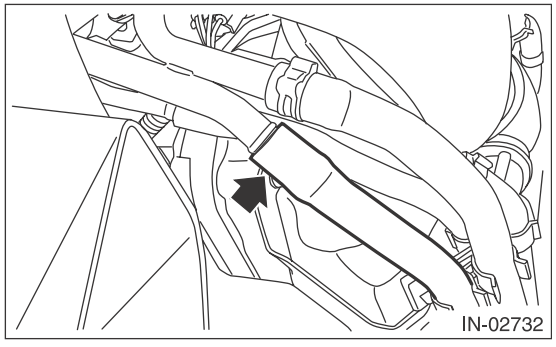

8) Connect the ground cable to battery.

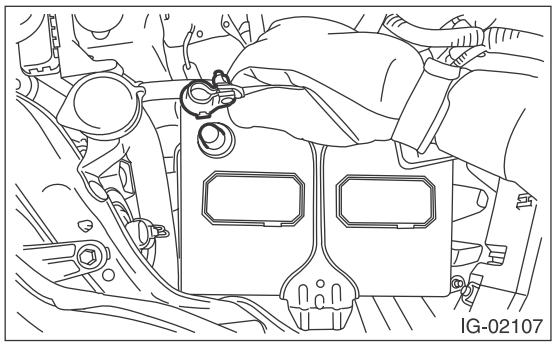

9) Install the collector cover.

C: DISASSEMBLY

1) Remove the vacuum hose (A) and vacuum hose (B) from intake duct.

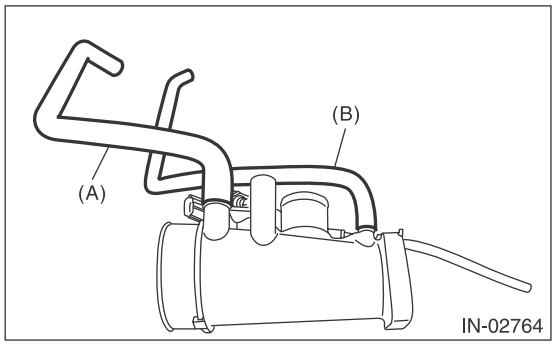

2) Remove the wastegate control solenoid valve and air control hose from the intake duct.

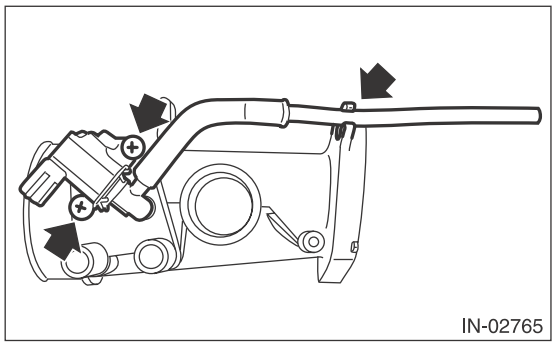

D: ASSEMBLY

1) Install the wastegate control solenoid valve and air control hose to the intake duct.

NOTE:
Use new O-rings.

Tightening torque:
1 N·m (0.1 kgf-m, 0.7 ft-lb)

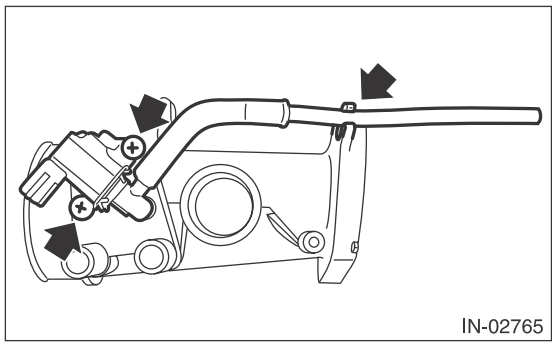

2) Install the vacuum hose (A) and vacuum hose (B) from intake duct.

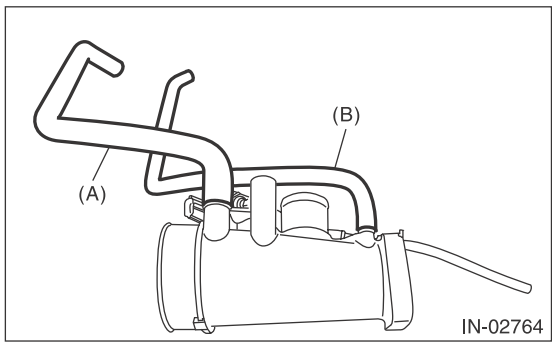

E: INSPECTION

1) Check that the intake duct, PCV pipe and blow-by pipe have no deformation, cracks or other damages.
2) Check that the vacuum hose and air control hose have no cracks, damage or loose part.

7. Intercooler

A: REMOVAL

1) Remove the collector cover.
2) Remove the clamp (A) which holds the intake duct to the intercooler, and remove bolts which secure the intercooler to the intercooler stay LH.

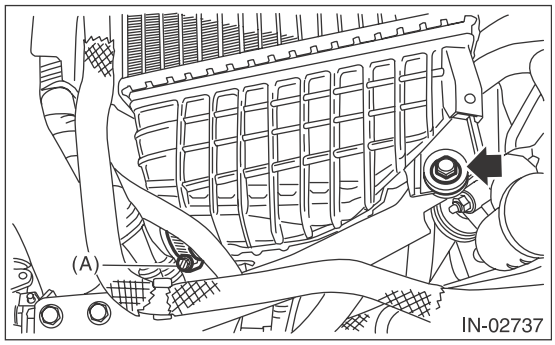

3) Loosen the clamp (A) securing the intake duct to the intercooler, and remove the bolt securing the intercooler to the intercooler stay RH to remove the intercooler.

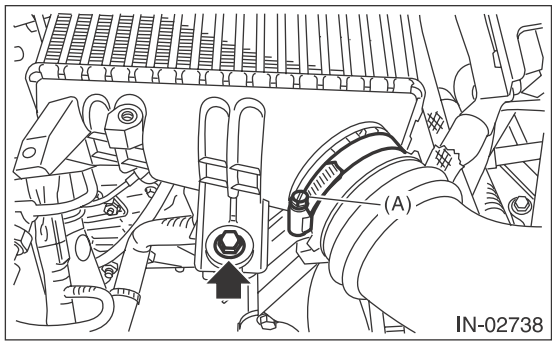

4) Remove the brake booster vacuum hose from the clip (A), and remove the intercooler stay RH and intercooler stay LH.

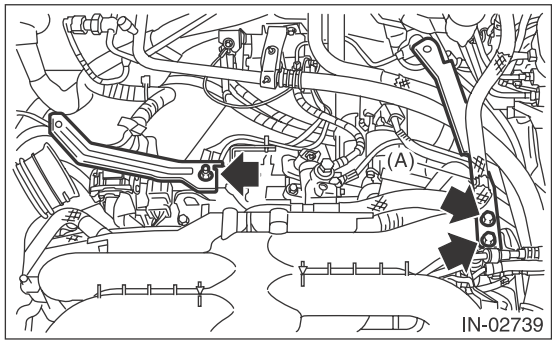

5) Remove the V-belts. <Ref. to ME(H4DOTC)-42, REMOVAL, V-belt.>
6) Remove the generator. <Ref. to SC(H4SO)-18, REMOVAL, Generator.>
7) Remove the power steering pump.
(1) Remove the suction hose from intake duct.

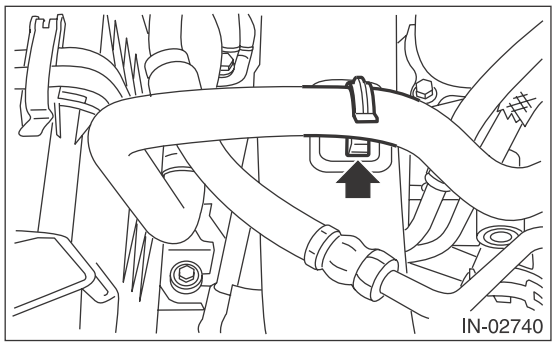

(2) Disconnect the connector (A) from power steering pump, and remove the power steering pump together with the power steering pump bracket from engine and stopper rod.

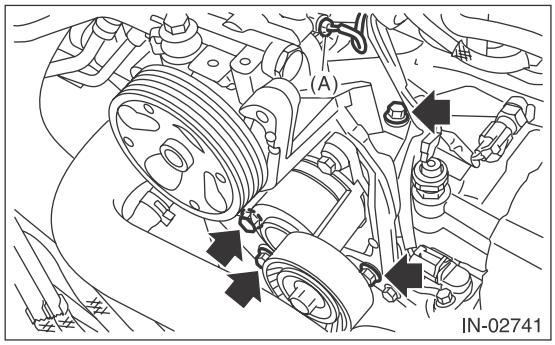

(3) Mount the power steering pump together with the power steering pump bracket on RH side wheel apron.
8) Remove the radiator sub fan motor assembly. <Ref. to CO(H4DOTC)-27, REMOVAL, Radiator Sub Fan and Fan Motor.>
9) Remove the engine coolant hose from the clip (A).
10) Remove the bolts which secure the intake duct to the turbocharger, and remove the air by-pass valve from the intake duct.

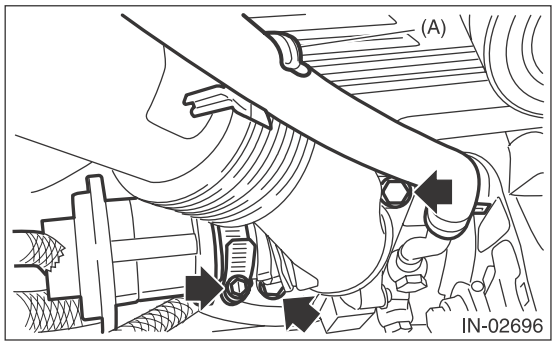

11) Remove the intake duct from intake manifold.

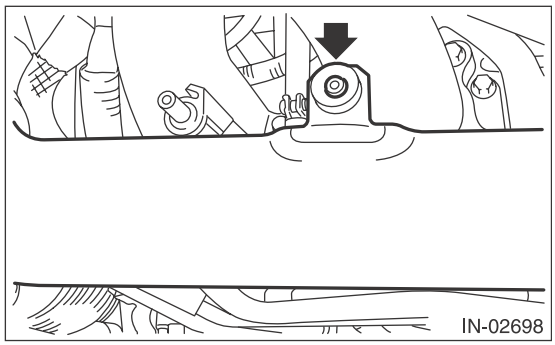

B: INSTALLATION

1) Install the intake duct to the intake manifold.

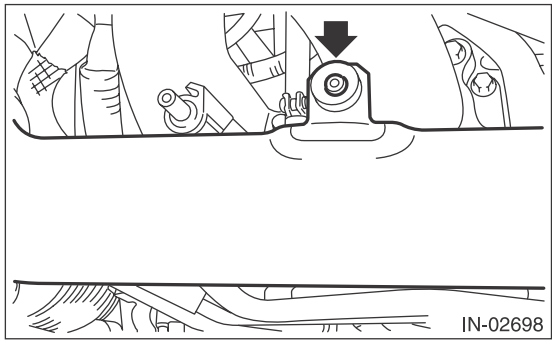

2) Attach the engine coolant hose to the clip (A).
3) Install the air by-pass valve to the intake duct, and install the bolts which secure the intake duct to the turbocharger.

NOTE:
- Use new O-rings.
- Be careful not to pinch the O-ring.

Tightening torque:
T1: 3 N·m (0.3 kgf-m, 2.2 ft-lb)
T2: 16 N·m (1.6 kgf-m, 11.8 ft-lb)

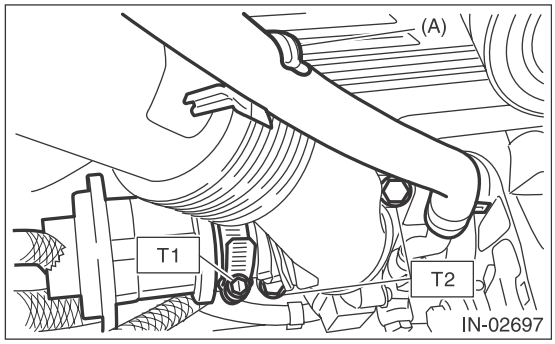

4) Install the radiator sub fan motor assembly. <Ref. to CO(H4DOTC)-27, INSTALLATION, Radiator Sub Fan and Fan Motor.>
5) Install the power steering pump.
(1) Install the power steering pump together with the power steering pump bracket to engine and stopper rod, and connect the connector (A) to the power steering pump.

Tightening torque:
Refer to "COMPONENT" of "STARTING/ CHARGING SYSTEMS" for the tightening torque. <Ref. to SC(H4SO)-5, GENERATOR, COMPONENT, General Description.>

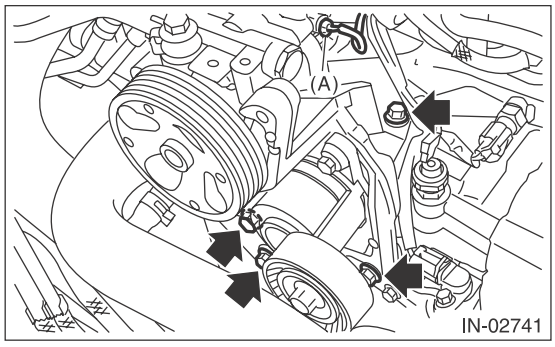

(2) Install the suction hose to the intake duct.

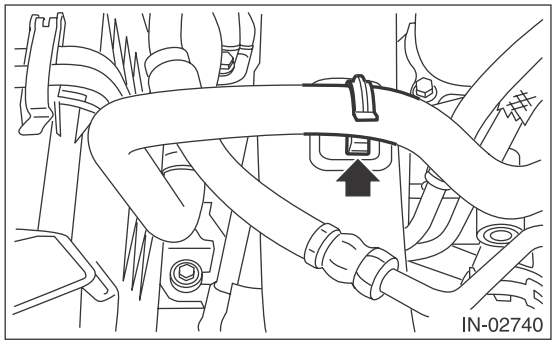

6) Install the generator. <Ref. to SC(H4SO)-18, INSTALLATION, Generator.>
7) Install the V-belts. <Ref. to ME(H4DOTC)-42, INSTALLATION, V-belt.>
8) Install the intercooler stay RH and intercooler stay LH, and install the brake booster vacuum hose to the clip (A).

Tightening torque:
16 N·m (1.6 kgf-m, 11.8 ft-lb)

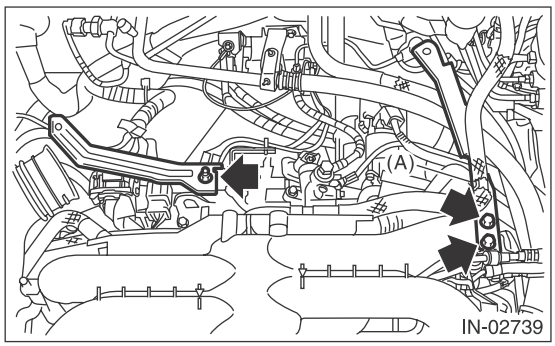

9) Place the intercooler and attach the bolt to secure the intercooler to the intercooler stay RH. And tighten the clamp to secure the intake duct to the intercooler.

Tightening torque:
T1: 3 N·m (0.3 kgf-m, 2.2 ft-lb)
T2: 16 N·m (1.6 kgf-m, 11.8 ft-lb)

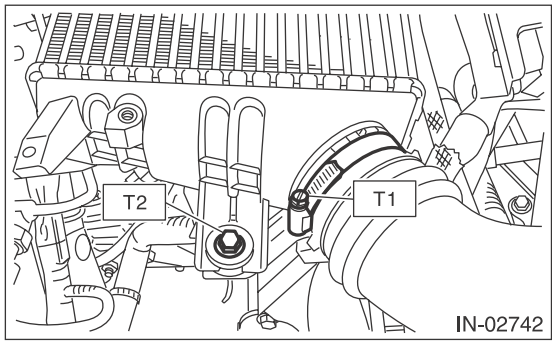

10) Install the bolts which secure the intercooler to the intercooler stay LH, and tighten the clamp which holds the intake duct to the intercooler.

Tightening torque:
T1: 3 N·m (0.3 kgf-m, 2.2 ft-lb)
T2: 16 N·m (1.6 kgf-m, 11.8 ft-lb)

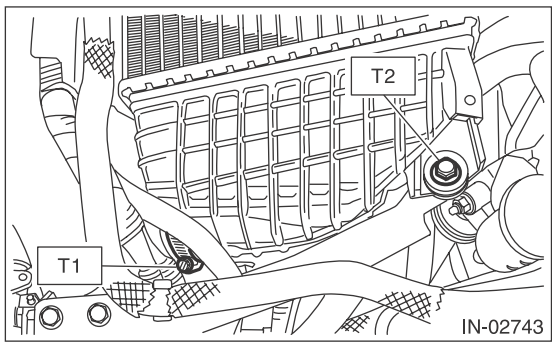

11) Install the collector cover.

C: INSPECTION

1) Check that the intercooler and intercooler stay have no deformation, cracks or other damages.
2) Check that the intake duct has no cracks, damage or loose part.

8. Turbocharger

A: REMOVAL

Remove the turbo charger and front exhaust pipe as a unit. Refer to “Front Exhaust Pipe” for the removal procedure. <Ref. to EX(H4DOTC)-5, REMOVAL, Front Exhaust Pipe.> <Ref. to EX(H4DOTC)-10, DISASSEMBLY, Front Exhaust Pipe.>

B: INSTALLATION

Refer to “Front Exhaust Pipe” for the installation procedure. <Ref. to EX(H4DOTC)-7, INSTALLATION, Front Exhaust Pipe.> <Ref. to EX(H4DOTC)-10, ASSEMBLY, Front Exhaust Pipe.>

C: DISASSEMBLY

1) Remove the oil inlet pipe from the turbocharger.

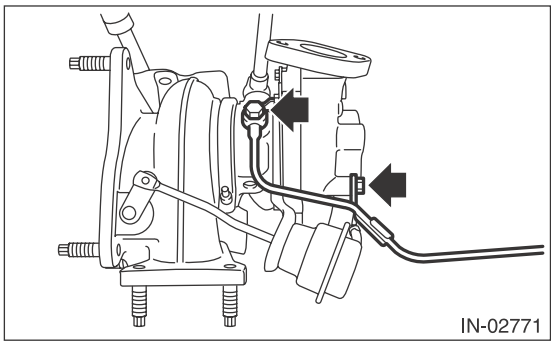

2) Remove the water pipe from the turbocharger.

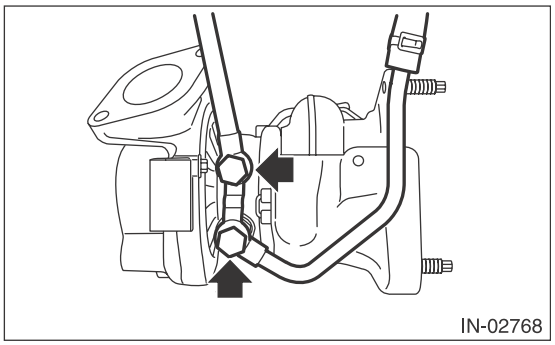

3) Remove the water pipe connector from the turbocharger.

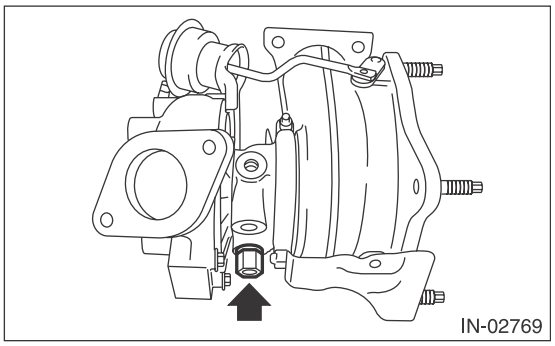

4) Remove the exhaust cover from the turbocharger.

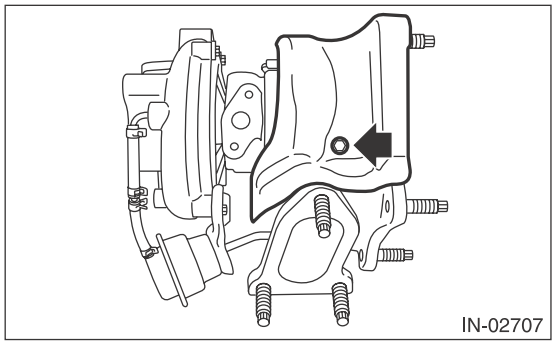

5) Remove the exhaust stay from the turbocharger.

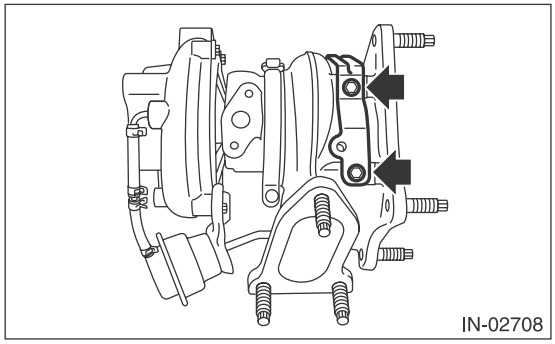

D: ASSEMBLY

1) Install the exhaust stay to the turbocharger.

Tightening torque:
6.4 N·m (0.7 kgf-m, 4.7 ft-lb)

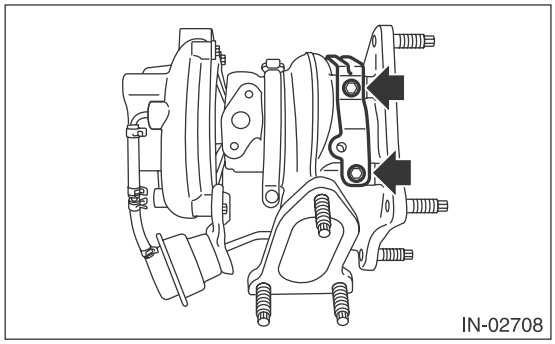

2) Install the exhaust cover to the turbocharger.

Tightening torque:
6.4 N·m (0.7 kgf-m, 4.7 ft-lb)

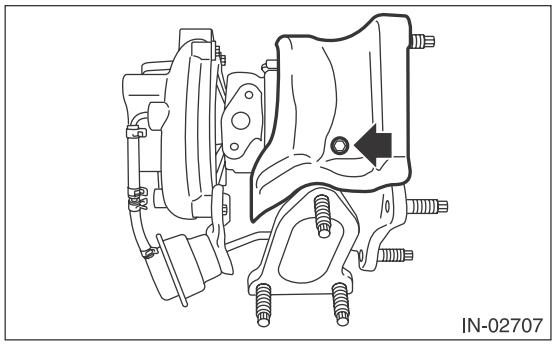

3) Install the water pipe connector to the turbocharger.

NOTE:
Use a new gasket.

Tightening torque:
36.5 N·m (3.7 kgf-m, 26.9 ft-lb)

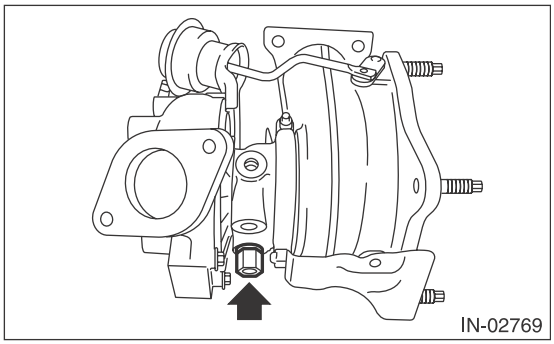

4) Install the water pipe to the turbocharger.

NOTE:
Use a new gasket.

Tightening torque:
31.5 N·m (3.2 kgf-m, 23.2 ft-lb)

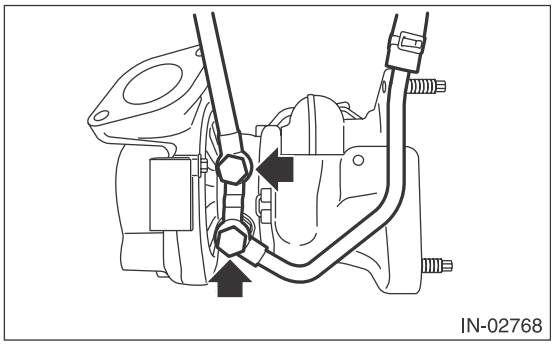

5) Install the oil inlet pipe to the turbocharger.

NOTE:
Use a new gasket.

Tightening torque:
T1: 6.4 N·m (0.7 kgf-m, 4.7 ft-lb)
T2: 16 N·m (1.6 kgf-m, 11.8 ft-lb)

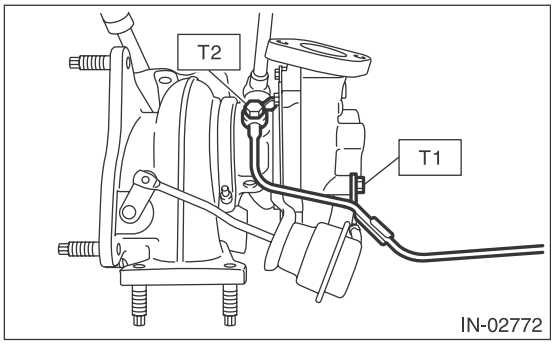

E: INSPECTION

1. WASTE GATE ACTUATOR

1) Remove the collector cover.
2) Remove the front exhaust pipe. <Ref. to EX(H4DOTC)-5, REMOVAL, Front Exhaust Pipe.>
3) Remove the exhaust pipe cover.

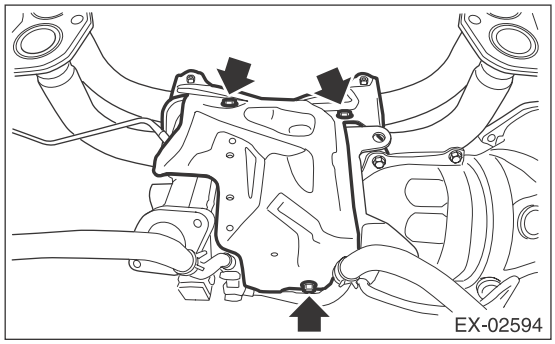

4) Remove the boost hose (B) from the waste gate actuator (A) of the turbocharger, and connect the Mighty Vac to the waste gate actuator (A).

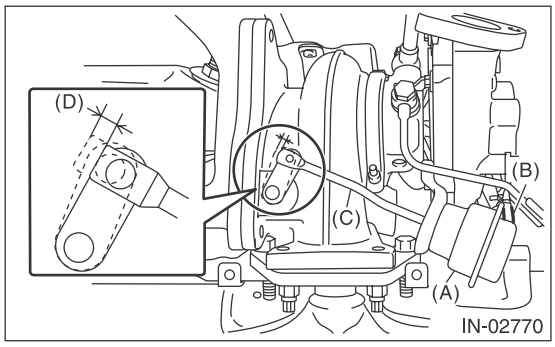

(A) Waste gate actuator
(B) Boost hose
(C) Control rod
(D) Control rod stroke

5) Pressurize slowly with the Mighty Vac, and check the pressure when the control rod stroke (D) becomes 2 mm (0.08 in). If it is not within the standard, replace the turbocharger assembly.

CAUTION:
Do not pressurize over 85.2 kPa (0.87 kgf/cm^2, 12.35 psi) to prevent damaging the waste gate actuator.

Operating pressure (control rod stroke 2 mm (0.08 in)):
Standard
70.8 — 76.7 kPa (0.72 — 0.78 kgf/cm^2, 10.27 — 11.12 psi)

6) After inspection, install the related parts in the reverse order of removal.

Tightening torque:
6.4 N·m (0.7 kgf-m, 4.7 ft-lb)

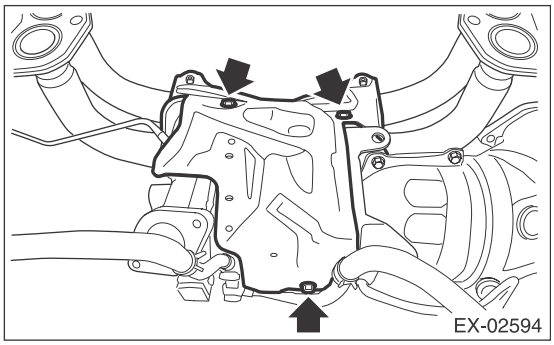

2. OTHER INSPECTIONS

1) Check that the turbocharger and pipe have no deformation, cracks or other damages.
2) Check that the hose has no cracks, damage or loose part.
3) Check that there are no oil leaks or water leaks from the pipe attachment section.

9. Oil Catch Tank

A: REMOVAL

1) Lift up the vehicle.
2) Remove the under cover. <Ref. to EI-35, REMOVAL, Front Under Cover.>
3) Remove the engine cover.

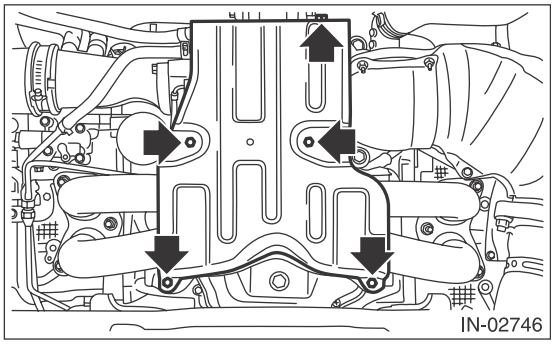

4) Disconnect vacuum hose (A) and oil outlet hose (B) from the oil catch tank.

NOTE:
Pinch the clamp of the vacuum hose (A) by fitting the cut out in the ST with the protrusion on the clamp as shown in the figure, and unlock the clamp.
ST 18353AA000 CLAMP PLIERS

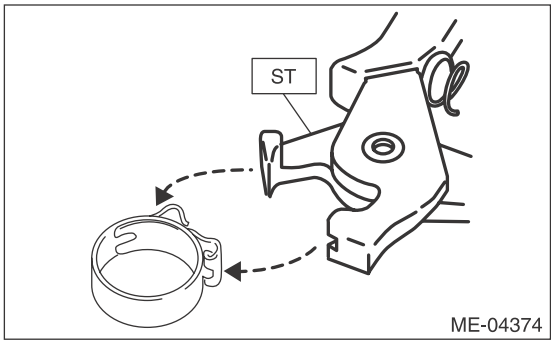

5) Remove bolts and nuts which secure the oil catch tank to the turbocharger and oil catch tank stay, and remove the oil catch tank.

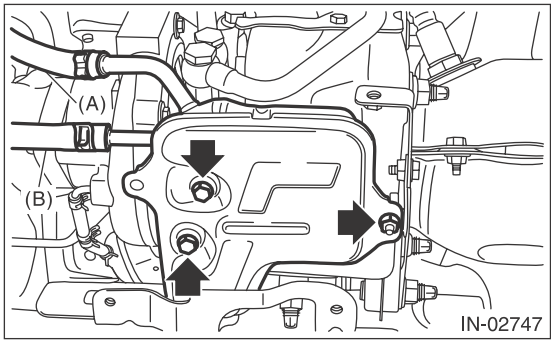

B: INSTALLATION

Install in the reverse order of removal.

NOTE:
- Use a new gasket.
- When installing the oil catch tank, tighten to the specified torque in the alphabetical order shown in the figure.
- Use a new clamp for the vacuum hose, fit the cut out in the ST with the protrusion on the clamp as shown in the figure, and lock the clamp.

ST 18353AA000 CLAMP PLIERS

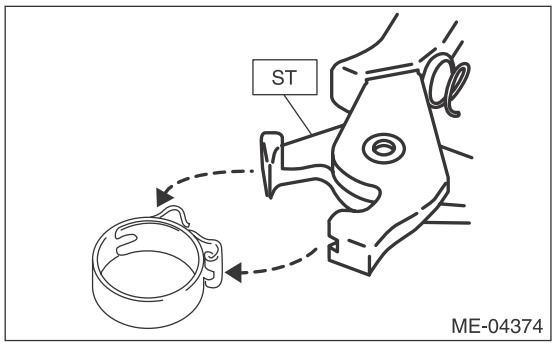

Tightening torque:
T1: 6.4 N·m (0.7 kgf-m, 4.7 ft-lb)
T2: 10.5 N·m (1.1 kgf-m, 7.7 ft-lb)

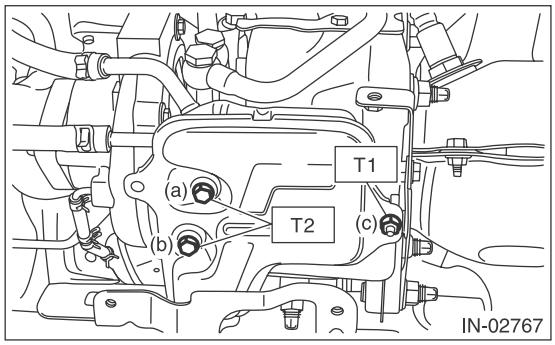

Tightening torque:
6.4 N·m (0.7 kgf-m, 4.7 ft-lb)

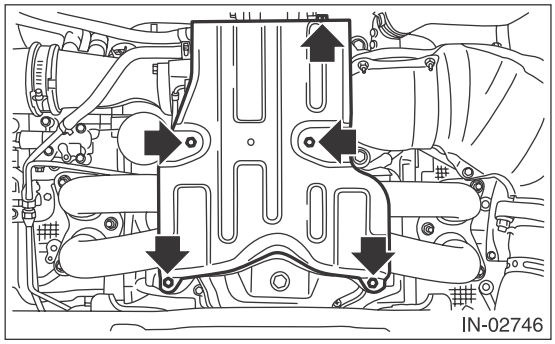

C: INSPECTION

1) Check that the oil catch tank does not have deformation, cracks or damage.
2) Check that the vacuum hose and oil outlet hose have no cracks, damage or loose part.

10.Scavenge Pump

A: REMOVAL

For removal procedures, refer to LU (H4SO) section. <Ref. to LU(H4SO)-28, REMOVAL, Scavenge Pump.>

B: INSTALLATION

For installation procedures, refer to LU (H4SO) section. <Ref. to LU(H4SO)-28, INSTALLATION, Scavenge Pump.>

C: INSPECTION

Refer to LU (H4SO) for inspection procedures. <Ref. to LU(H4SO)-28, INSPECTION, Scavenge Pump.>

11.Air By-pass Valve

A: REMOVAL

1) Remove the collector cover.
2) Disconnect the vacuum control hose from the PCV pipe, and remove the vacuum control hose from the clip (A).

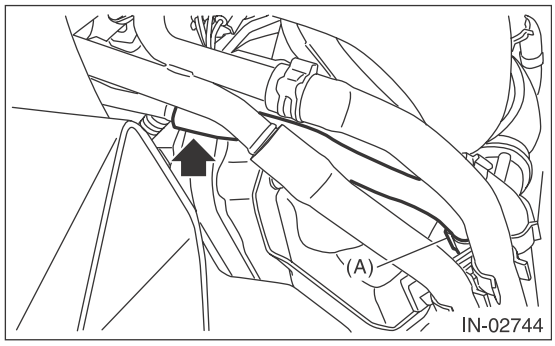

3) Loosen the clamp which holds the air by-pass valve to the intake duct.

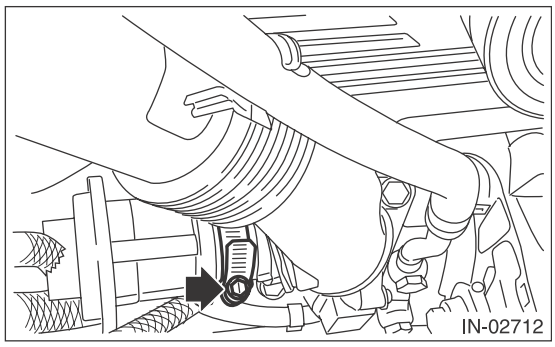

4) Lift up the vehicle.
5) Remove the under cover. <Ref. to EI-35, REMOVAL, Front Under Cover.>
6) Remove the air by-pass valve from the intake duct.

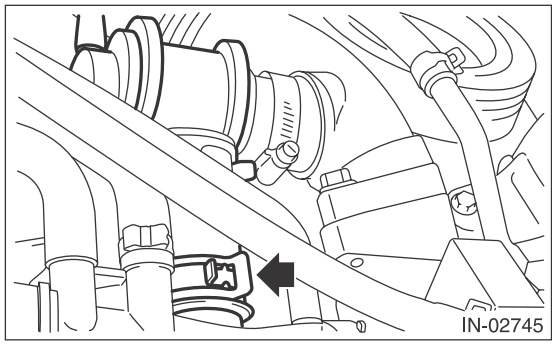

B: INSTALLATION

Install in the reverse order of removal.

Tightening torque:
3 N·m (0.3 kgf-m, 2.2 ft-lb)

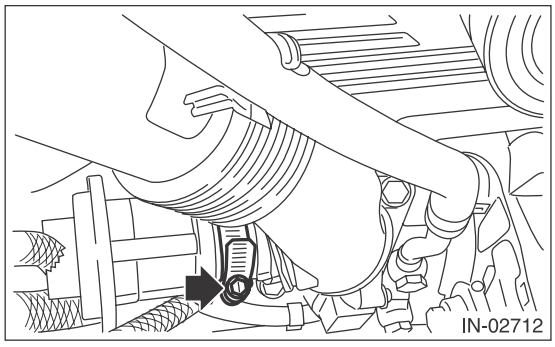

C: INSPECTION

1. AIR BY-PASS VALVE

1) Check that the air by-pass valve has no deformation, cracks or other damages.
2) Connect the Mighty Vac to the nipple (A) of the air by-pass valve.

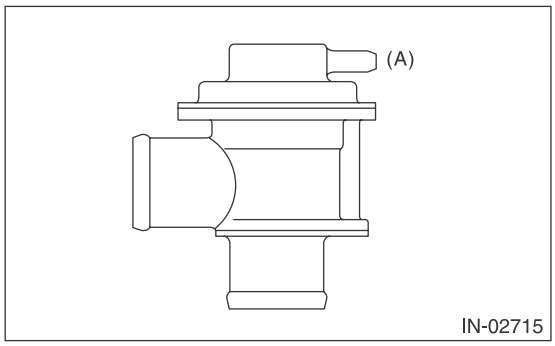

3) Using the Mighty Vac, generate the negative pressure to –93.3 kPa (–0.95 kgf/cm^2, –13.5 psi). Check that the Mighty Vac gauge needle holds 10 seconds without falling by –92.6 kPa (–0.94 kgf/cm^2, –13.4 psi).

4) Set a dial gauge to the end of valve rod of the air by-pass valve.

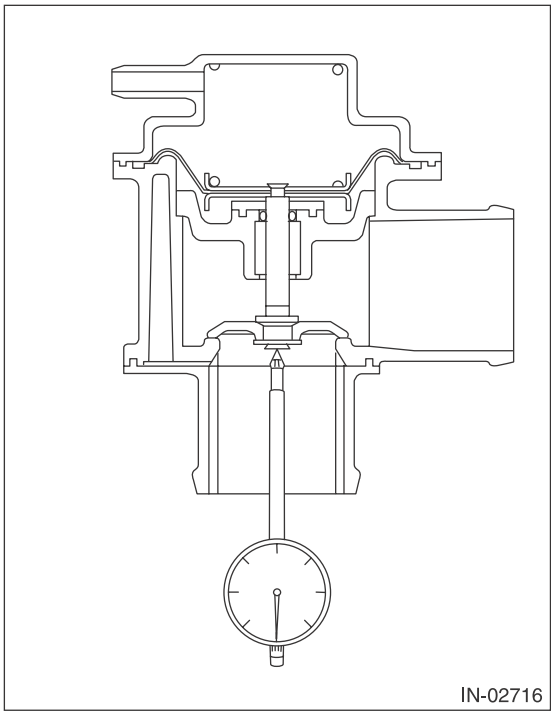

5) Using the Mighty Vac, generate the negative pressure, and check the pressure when dial gauge needle (valve stroke) shows 0.5 mm (0.02 in). If it is not within the standard, replace the air by-pass valve.

Opening pressure (valve stroke 0.5 mm (0.02 in)):

Standard

–49.3 — –57.3 kPa (–0.50 — –0.58 kgf/cm^2, –7.15 — –8.31 psi)

2. OTHER INSPECTIONS

Check that the vacuum hose and air by-pass pipe have no cracks, damage or loose part.

12.Resonator Chamber

A: REMOVAL

The resonator chamber and air cleaner case are integrated into one unit; therefore, refer to “Air Cleaner Case” for removal procedure. <Ref. to IN(H4DOTC)-8, REMOVAL, Air Cleaner Case.>

B: INSTALLATION

The resonator chamber and air cleaner case are integrated into one unit; therefore, refer to “Air Cleaner Case” for installation procedure. <Ref. to IN(H4DOTC)-8, INSTALLATION, Air Cleaner Case.>

C: INSPECTION

Check that the resonator chamber has no deformation, cracks or other damages.

MECHANICAL

ME(H4DOTC)

		Page
1.	General Description	2
2.	Compression	21
3.	Idle Speed	22
4.	Ignition Timing	23
5.	Intake Manifold Vacuum	24
6.	Engine Oil Pressure	25
7.	Fuel Pressure	26
8.	Valve Clearance	27
9.	Engine Assembly	31
10.	Engine Mounting	38
11.	Preparation for Overhaul	41
12.	V-belt	42
13.	Crank Pulley	44
14.	Timing Belt Cover	46
15.	Timing Belt	51
16.	Cam Sprocket	60
17.	Crank Sprocket	61
18.	Camshaft	62
19.	Cylinder Head	72
20.	Cylinder Block	81
21.	Intake and Exhaust Valve	105
22.	Piston	106
23.	Connecting Rod	107
24.	Crankshaft	108
25.	Engine Trouble in General	109
26.	Engine Noise	115

1. General Description

A: SPECIFICATION

Engine	Model				2.5 L
	Cylinder arrangement				Horizontally opposed, liquid cooled, 4-cylinder, 4-stroke gasoline engine
	Valve system mechanism				Belt driven, double overhead camshaft, 4-valve/cylinder
	Bore × Stroke mm (in)				99.5 × 79.0 (3.92 × 3.11)
	Displacement cm^3 (cu in)				2,457 (149.94)
	Compression ratio				9.5
	Compression pressure (at 200 — 300 rpm) kPa (kg/cm^2, psi)			Standard	981 — 1,177 (10 — 12, 142 — 171)
	Number of piston rings				Pressure ring: 2, Oil ring: 1
	Intake valve timing		Open	Max. retard	ATDC 5°
				Min. advance	BTDC 35°
			Close	Max. retard	ABDC 65°
				Min. advance	ABDC 25°
	Exhaust valve timing		Open	Max. retard	BBDC 32°
				Min. advance	BBDC 72°
			Close	Max. retard	ATDC 28°
				Min. advance	BTDC 12°
	Valve clearance mm (in)	Inspection value	Intake		$0.20^{+0.04}_{-0.06}$ ($0.0079^{+0.0016}_{-0.0024}$)
			Exhaust		0.35±0.05 (0.0138±0.0020)
		Adjustment value	Intake		$0.20^{+0.01}_{-0.03}$ ($0.0079^{+0.0004}_{-0.0012}$)
			Exhaust		0.35±0.02 (0.0138±0.0008)
	Idle speed (gear shift lever in neutral position) rpm		No load	Standard	700±100
			A/C ON	Standard	700 — 850±100
	Ignition order				1 → 3 → 2 → 4
	Ignition timing BTDC/rpm			Standard	15°±10°/700

NOTE:
OS: Oversize US: Undersize

Belt tension adjuster	Adjuster rod protrusion amount		mm (in)	5.2 — 6.2 (0.205 — 0.244)
Camshaft	Bending limit		mm (in)	0.020 (0.00079)
	Cam lobe height mm (in)	Intake	Standard	46.55 — 46.65 (1.833 — 1.837)
		Exhaust	Standard	45.85 — 45.95 (1.805 — 1.809)
	Cam base circle diameter mm (in)		Standard	37.0 (1.457)
	Journal O.D. mm (in)	Front	Standard	37.946 — 37.963 (1.4939 — 1.4946)
		Center, rear	Standard	29.946 — 29.963 (1.1790 — 1.1796)
	Oil clearance mm (in)		Standard	0.037 — 0.072 (0.0015 — 0.0028)
	Thrust clearance mm (in)		Standard	0.068 — 0.116 (0.0027 — 0.0047)
Cylinder head	Warping limit (Mating surface with cylinder block)		mm (in)	0.035 (0.0014)
	Grinding limit		mm (in)	0.3 (0.012)
	Standard height		mm (in)	127.5 (5.02)
Valve seat	Seating angle between valve and valve seat			90°
	Contacting width of valve and valve seat mm (in)	Intake	Standard	0.6 — 1.4 (0.024 — 0.055)
		Exhaust	Standard	1.2 — 1.8 (0.047 — 0.071)
Valve guide	Clearance between the valve guide and valve stem mm (in)	Intake	Standard	0.030 — 0.057 (0.0012 — 0.0022)
		Exhaust	Standard	0.040 — 0.067 (0.0016 — 0.0026)
	Inside diameter		mm (in)	6.000 — 6.012 (0.2362 — 0.2367)
	Valve stem outer diameter mm (in)	Intake		5.955 — 5.970 (0.2344 — 0.2350)
		Exhaust		5.945 — 5.960 (0.2341 — 0.2346)
	Valve guide protrusion amount		mm (in)	15.8 — 16.2 (0.622 — 0.638)
Valve	Head edge thickness mm (in)	Intake	Standard	1.0 — 1.4 (0.039 — 0.055)
		Exhaust	Standard	1.3 — 1.7 (0.051 — 0.067)
	Overall length mm (in)	Intake		104.4 (4.110)
		Exhaust		104.65 (4.1201)
Valve spring	Free length		mm (in)	47.32 (1.863)
	Tension/spring height N (kgf, lb)/mm (in)		Set	205 — 235 (20.90 — 23.96, 46.09 — 52.84)/36.0 (1.417)
			Lift	426 — 490 (43.44 — 49.96, 95.78 — 110.17)/26.5 (1.043)
	Squareness			2.5°, 2.1 mm (0.083 in) or less
Valve lifter	Outer diameter mm (in)		Standard	34.959 — 34.975 (1.3763 — 1.3770)
	Inner diameter of valve lifter mating surface mm (in)		Standard	34.994 — 35.016 (1.3777 — 1.3786)
	Clearance between valve lifter and valve lifter mating surface mm (in)		Standard	0.019 — 0.057 (0.0007 — 0.0022)
Cylinder block	Warping limit (Mating surface with cylinder head)		mm (in)	0.025 (0.0098)
	Grinding limit		mm (in)	0.1 (0.004)
	Standard height		mm (in)	201.0 (7.91)
	Taper mm (in)		Standard	0.015 (0.0006)
	Out-of-roundness mm (in)		Standard	0.010 (0.0004)
	Cylinder to piston clearance at 20°C (68°F): mm (in)		Standard	–0.010 — 0.010 (–0.00039 — 0.00039)
	Cylinder inner diameter boring limit (diameter)		mm (in)	To 100.005 (3.9372)

Piston	Piston grade point mm (in)			38.2 (1.50)
	Outer diameter mm (in)	Standard	A	99.505 — 99.515 (3.9175 — 3.9179)
			B	99.495 — 99.505 (3.9171 — 3.9175)
		0.25 (0.0098) OS		99.745 — 99.765 (3.9270 — 3.9278)
		0.50 (0.0197) OS		99.995 — 100.015 (3.9368 — 3.9376)
Piston pin	Degree of fit			Piston pin must be fitted into position with thumb at 20°C (68°F).
	Clearance between piston pin hole and piston pin mm (in)		Standard	0.004 — 0.008 (0.0002 — 0.0003)
Piston ring	Piston ring gap mm (in)	Top ring	Standard	0.20 — 0.25 (0.0079 — 0.0098)
		Second ring	Standard	0.37 — 0.52 (0.015 — 0.0203)
		Oil ring	Standard	0.20 — 0.50 (0.0079 — 0.0197)
	Clearance between piston ring and piston ring groove mm (in)	Top ring	Standard	0.040 — 0.080 (0.0016 — 0.0031)
		Second ring	Standard	0.030 — 0.070 (0.0012 — 0.0028)
Connecting rod and connecting rod bearing	Bend or twist per 100 mm (3.94 in) in length mm (in)		Service limit	0.1 (0.0039)
	Thrust clearance mm (in)		Standard	0.070 — 0.330 (0.0028 — 0.0130)
	Oil clearance mm (in)		Standard	0.017 — 0.045 (0.0007 — 0.0018)
	Bearing size (Thickness at center) mm (in)	Standard		1.490 — 1.506 (0.0587 — 0.0593)
		0.03 (0.0012) US		1.504 — 1.512 (0.0592 — 0.0595)
		0.05 (0.0020) US		1.514 — 1.522 (0.0596 — 0.0599)
		0.25 (0.0098) US		1.614 — 1.622 (0.0635 — 0.0639)
Bushing of small end	Clearance between piston pin and bushing mm (in)		Standard	0 — 0.022 (0 — 0.0009)
Crankshaft and crankshaft bearing	Bending limit mm (in)			0.035 (0.0014)
	Crank pin	Out-of-roundness mm (in)		0.003 (0.0001)
		Cylindricality mm (in)		0.004 (0.0002)
		Grinding limit (dia.) mm (in)		To 51.750 (2.0374)
	Crank journal	Out-of-roundness mm (in)		0.005 (0.0002)
		Cylindricality mm (in)		0.006 (0.0002)
		Grinding limit (dia.) mm (in)		To 59.758 (2.3527)
	Crank pin outer diameter mm (in)	Standard		51.976 — 52.000 (2.0463 — 2.0472)
		0.03 (0.0012) US		51.954 — 51.970 (2.0454 — 2.0461)
		0.05 (0.0020) US		51.934 — 51.950 (2.0447 — 2.0453)
		0.25 (0.0098) US		51.734 — 51.750 (2.0368 — 2.0374)
	Crank journal outer diameter mm (in)	Standard		59.984 — 60.008 (2.3616 — 2.3625)
		0.03 (0.0012) US		59.962 — 59.978 (2.3607 — 2.3613)
		0.05 (0.0020) US		59.942 — 59.958 (2.3599 — 2.3605)
		0.25 (0.0098) US		59.742 — 59.758 (2.3520 — 2.3527)
	Bearing size (Thickness at center) mm (in)	#1, #3 Standard		1.998 — 2.015 (0.0787 — 0.0793)
		#1, #3 0.03 (0.0012) US		2.017 — 2.020 (0.0794 — 0.0795)
		#1, #3 0.05 (0.0020) US		2.027 — 2.030 (0.0798 — 0.0799)
		#1, #3 0.25 (0.0098) US		2.127 — 2.130 (0.0837 — 0.0839)
		#2, #4, #5 Standard		2.000 — 2.017 (0.0787 — 0.0794)
		#2, #4, #5 0.03 (0.0012) US		2.019 — 2.022 (0.0795 — 0.0796)
		#2, #4, #5 0.05 (0.0020) US		2.029 — 2.032 (0.0799 — 0.0800)
		#2, #4, #5 0.25 (0.0098) US		2.129 — 2.132 (0.0838 — 0.0839)
	Thrust clearance mm (in)		Standard	0.030 — 0.115 (0.0012 — 0.0045)
	Oil clearance mm (in)		Standard	0.010 — 0.030 (0.00039 — 0.0012)

B: COMPONENT

1. V-BELT

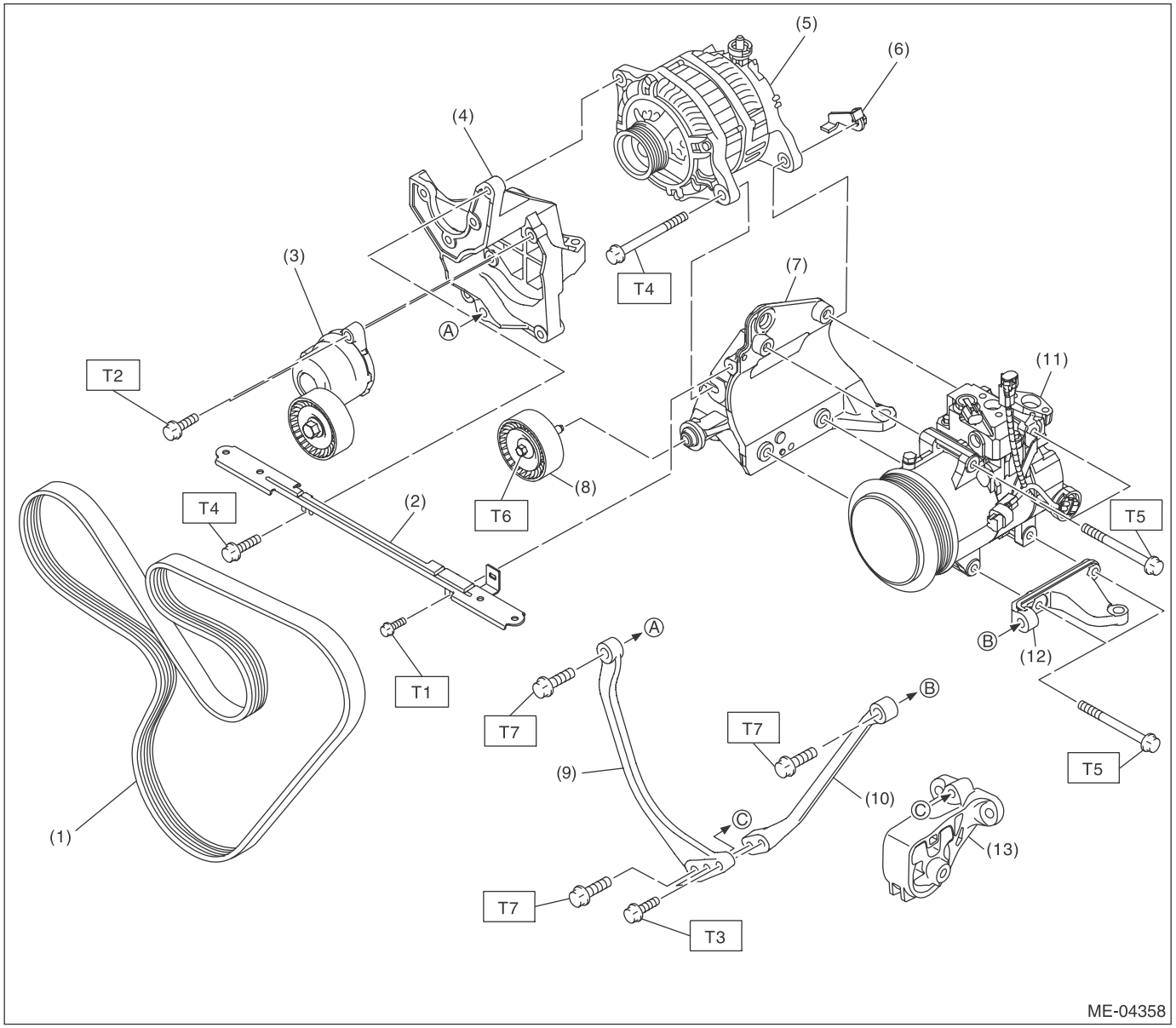

(1)	V-belt	(8)	Idler pulley ASSY
(2)	Collector cover bracket	(9)	Stopper rod RH
(3)	V-belt tensioner ASSY	(10)	Stopper rod LH
(4)	Power steering pump bracket	(11)	A/C compressor
(5)	Generator	(12)	A/C compressor bracket B
(6)	Generator plate	(13)	Front cushion rubber
(7)	A/C compressor bracket A		

Tightening torque:N·m (kgf-m, ft-lb)

T1: 6.4 (0.7, 4.7)
T2: 20 (2.0, 14.8)
T3: 22 (2.2, 16.2)
T4: 25 (2.5, 18.4)
T5: 26.5 (2.7, 19.5)
T6: 33 (3.4, 24.3)
T7: 36 (3.7, 26.6)

2. TIMING BELT

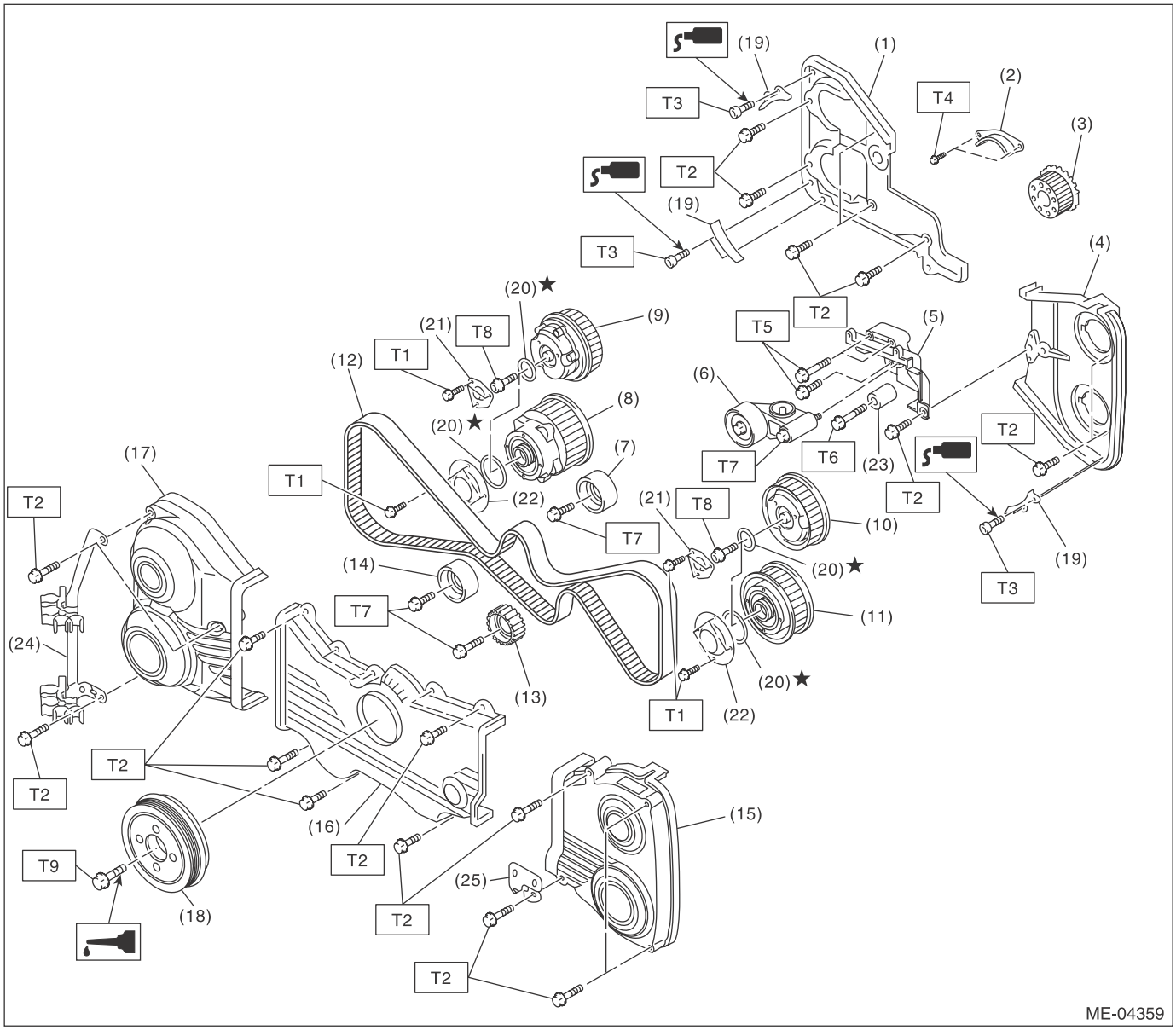

(1)	Timing belt cover No. 2 RH	(13)	Belt idler No. 2	(25)	Oxygen sensor bracket
(2)	Timing belt guide	(14)	Belt idler		
(3)	Crank sprocket	(15)	Timing belt cover LH	***Tightening torque:N·m (kgf-m, ft-lb)***	
(4)	Timing belt cover No. 2 LH	(16)	Front belt cover	***T1:***	***3.4 (0.3, 2.5)***
(5)	Tensioner bracket	(17)	Timing belt cover RH	***T2:***	***5 (0.5, 3.7)***
(6)	Automatic belt tension adjuster ASSY	(18)	Crank pulley	***T3:***	***6.4 (0.7, 4.7)***
(7)	Belt idler	(19)	Timing belt guide	***T4:***	***9.75 (1.0, 7.2)***
(8)	Exhaust cam sprocket RH	(20)	O-ring	***T5:***	***24.5 (2.5, 18.1)***
(9)	Intake cam sprocket RH	(21)	Intake actuator cover	***T6:***	***25 (2.5, 18.4)***
(10)	Intake cam sprocket LH	(22)	Exhaust actuator cover	***T7:***	***39 (4.0, 28.8)***
(11)	Exhaust cam sprocket LH	(23)	Belt idler	***T8:***	***<Ref. to ME(H4DOTC)-60, INSTALLATION, Cam Sprocket.>***
(12)	Timing belt	(24)	Hose clip stay ASSY	***T9:***	***<Ref. to ME(H4DOTC)-44, INSTALLATION, Crank Pulley.>***

3. CYLINDER HEAD AND CAMSHAFT

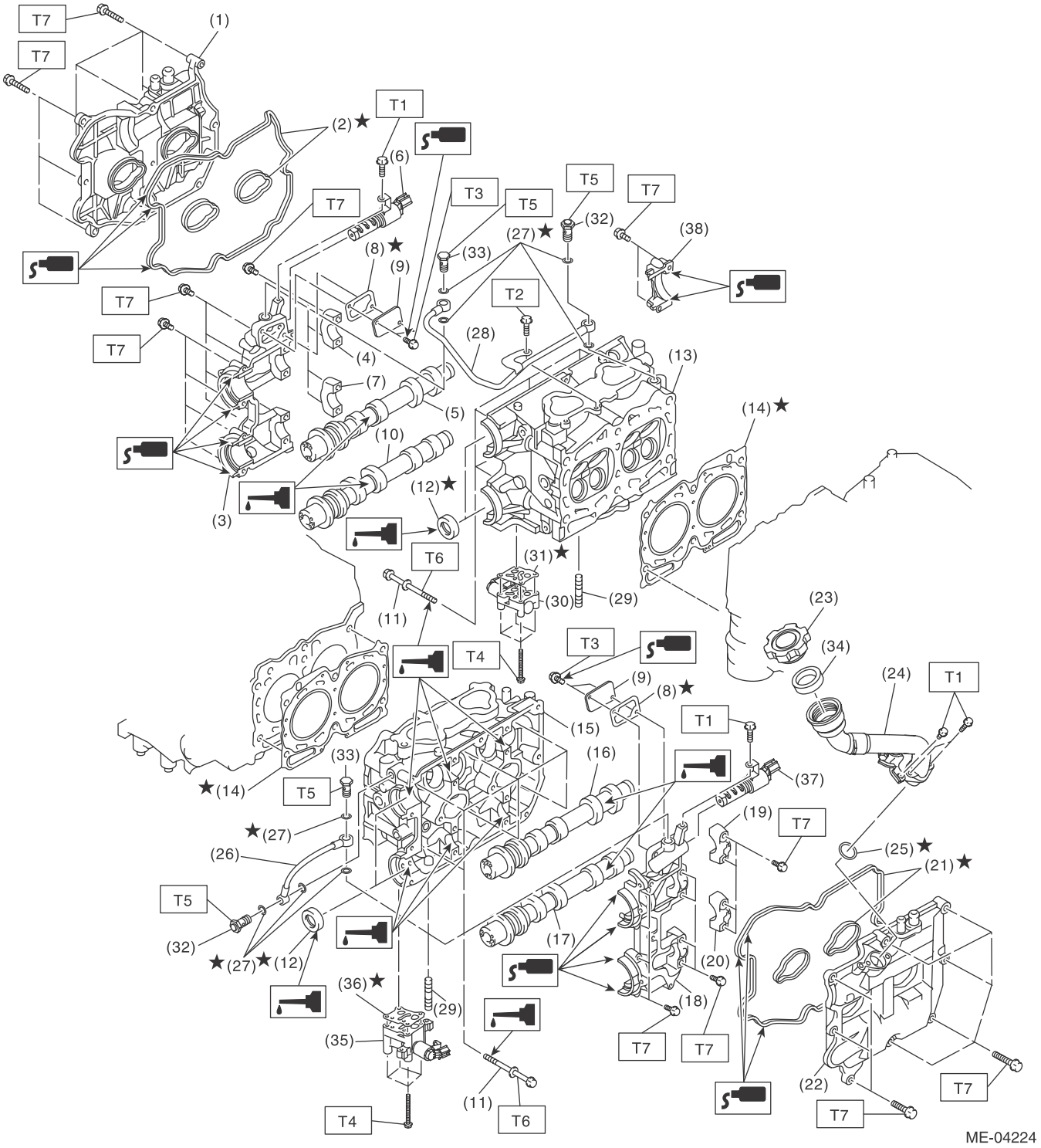

(1) Rocker cover RH
(2) Rocker cover gasket RH
(3) Front camshaft cap RH
(4) Intake camshaft cap RH
(5) Intake camshaft RH
(6) Intake oil flow control solenoid valve RH
(7) Exhaust camshaft cap RH
(8) Gasket
(9) Oil return cover
(10) Exhaust camshaft RH
(11) Cylinder head bolt
(12) Oil seal
(13) Cylinder head RH
(14) Cylinder head gasket
(15) Cylinder head LH
(16) Intake camshaft LH
(17) Exhaust camshaft LH
(18) Front camshaft cap LH
(19) Intake camshaft cap LH
(20) Exhaust camshaft cap LH
(21) Rocker cover gasket LH
(22) Rocker cover LH
(23) Oil filler cap
(24) Oil filler duct
(25) O-ring
(26) Oil pipe LH
(27) Gasket
(28) Oil pipe RH
(29) Stud bolt
(30) Exhaust oil flow control solenoid valve RH
(31) Gasket (RH)
(32) Union bolt with filter (with protrusion)
(33) Union bolt without filter (without protrusion)
(34) Gasket
(35) Exhaust oil flow control solenoid valve LH
(36) Gasket (LH)
(37) Intake oil flow control solenoid valve LH
(38) Rear camshaft cap

Tightening torque:N·m (kgf-m, ft-lb)

T1:	***6.4 (0.7, 4.7)***
T2:	***8 (0.8, 5.9)***
T3:	***9 (0.9, 6.6)***
T4:	***10 (1.0, 7.4)***
T5:	***29 (3.0, 21.4)***
T6:	***<Ref. to ME(H4DOTC)-73, INSTALLATION, Cylinder Head.>***
T7:	***<Ref. to ME(H4DOTC)-65, INSTALLATION, Camshaft.>***

4. CYLINDER HEAD AND VALVE ASSEMBLY

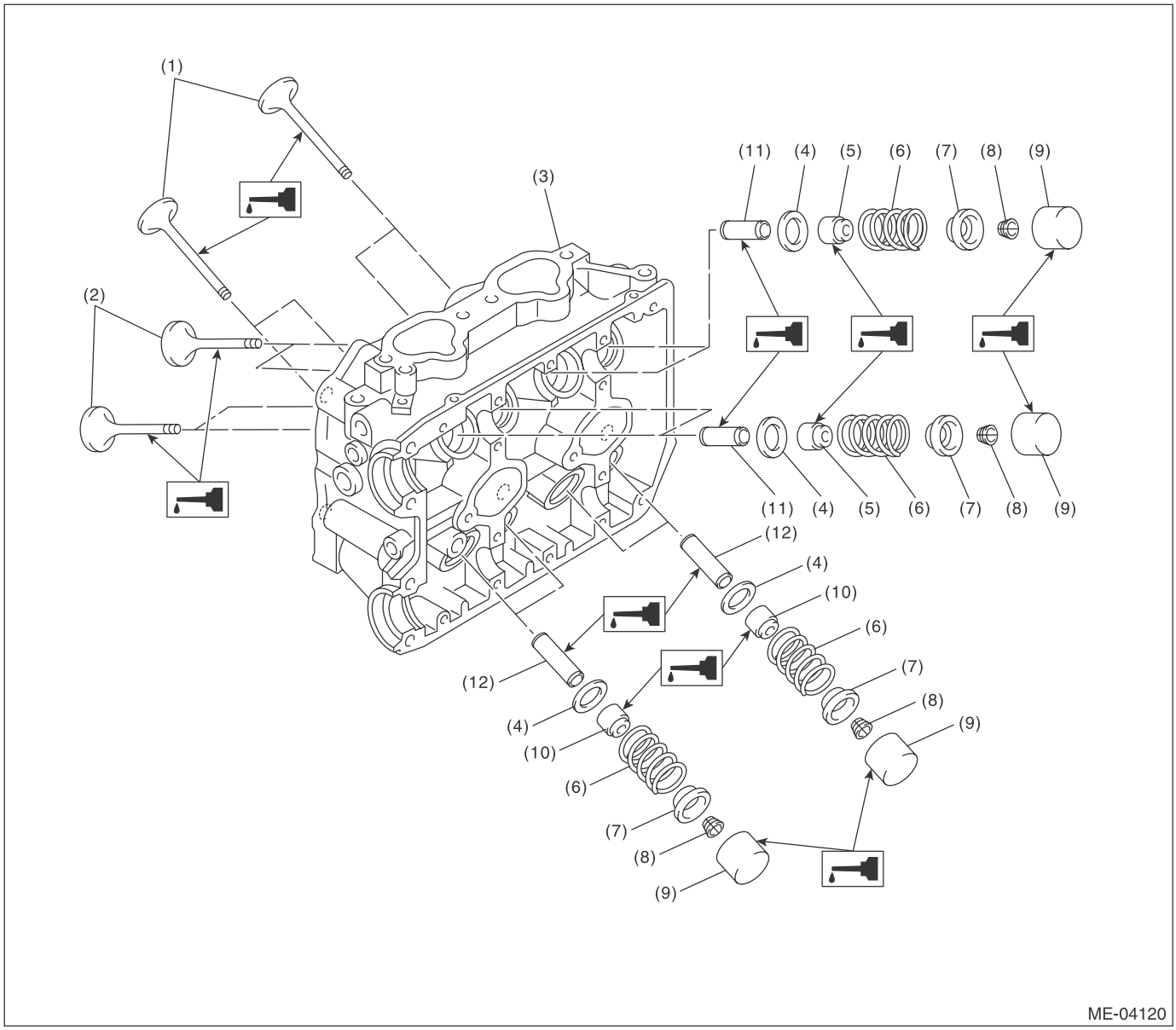

(1) Exhaust valve
(2) Intake valve
(3) Cylinder head
(4) Valve spring seat
(5) Intake valve oil seal
(6) Valve spring
(7) Retainer
(8) Retainer key
(9) Valve lifter
(10) Exhaust valve oil seal
(11) Intake valve guide
(12) Exhaust valve guide

5. CYLINDER BLOCK

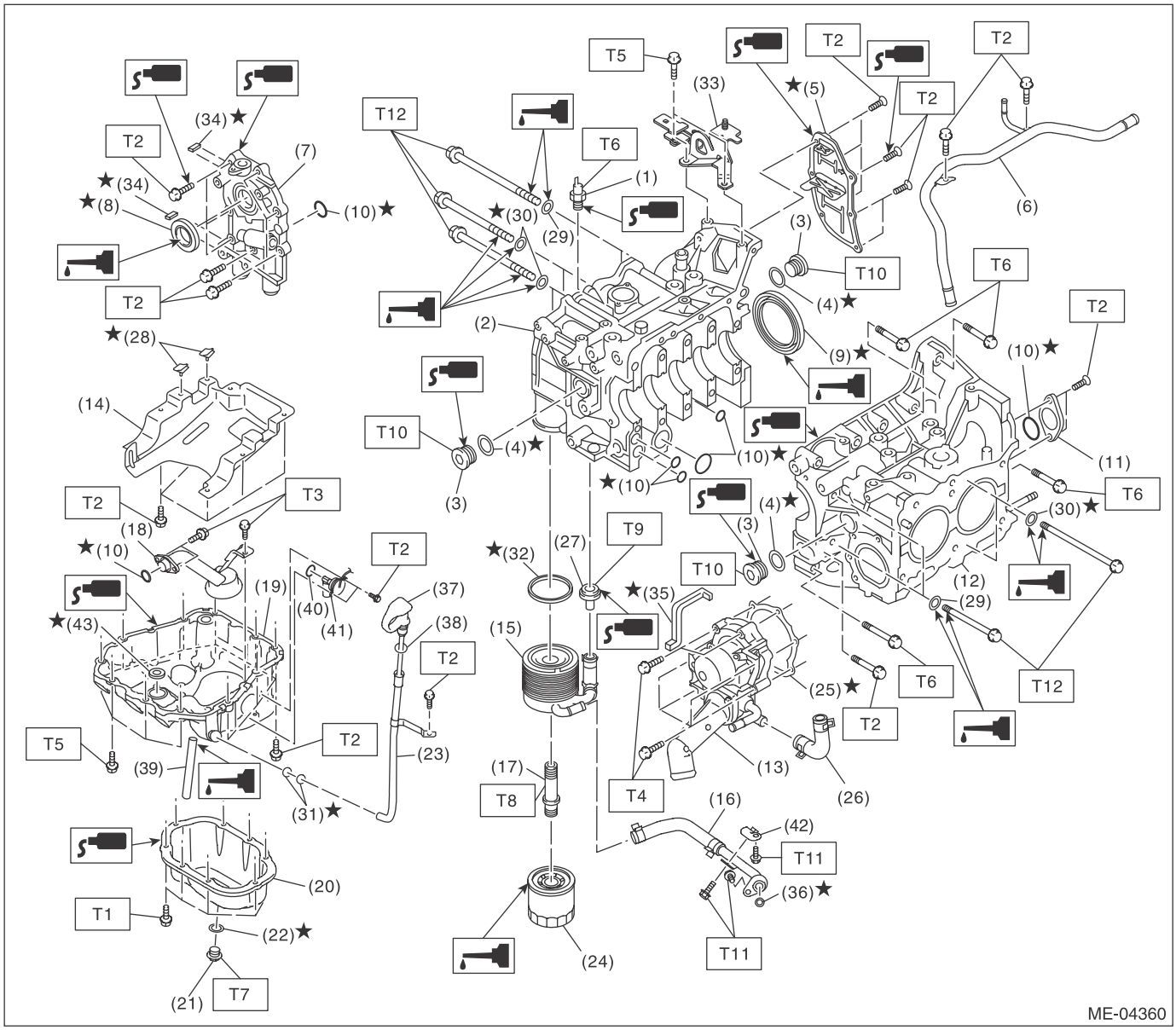

(1) Oil pressure switch
(2) Cylinder block RH
(3) Service hole plug
(4) Gasket
(5) Oil separator cover
(6) Water by-pass pipe
(7) Oil pump
(8) Front oil seal
(9) Rear oil seal
(10) O-ring
(11) Service hole cover
(12) Cylinder block LH
(13) Water pump
(14) Baffle plate
(15) Oil cooler
(16) Oil cooler pipe
(17) Connector
(18) Oil strainer
(19) Cylinder block lower
(20) Oil pan
(21) Drain plug
(22) Drain plug gasket
(23) Oil level gauge guide
(24) Oil filter
(25) Gasket
(26) Water pump hose
(27) Nipple
(28) Seal
(29) Washer
(30) Seal washer
(31) O-ring
(32) Gasket
(33) Engine rear hanger
(34) Oil pump seal
(35) Water pump sealing
(36) O-ring
(37) Oil level gauge
(38) O-ring
(39) Oil drain pipe
(40) O-ring
(41) Oil level switch
(42) Oil cooler pipe stay
(43) O-ring

Tightening torque:N·m (kgf-m, ft-lb)	
T1:	*5 (0.5, 3.7)*
T2:	*6.4 (0.7, 4.7)*
T3:	*10 (1.0, 7.4)*
T4:	*First 12 (1.2, 8.9)*
	Second 12 (1.2, 8.9)
T5:	*16 (1.6, 11.8)*
T6:	*25 (2.5, 18.4)*
T7:	*41.7 (4.3, 30.8)*
T8:	*54 (5.5, 39.8)*
T9:	*69 (7.0, 50.9)*
T10:	*70 (7.1, 51.6)*
T11:	*<Ref. to LU(H4SO)-26, INSTALLATION, Engine Oil Cooler.>*
T12:	*<Ref. to ME(H4DOTC)-86, INSTALLATION, Cylinder Block.>*

6. CRANKSHAFT AND PISTON

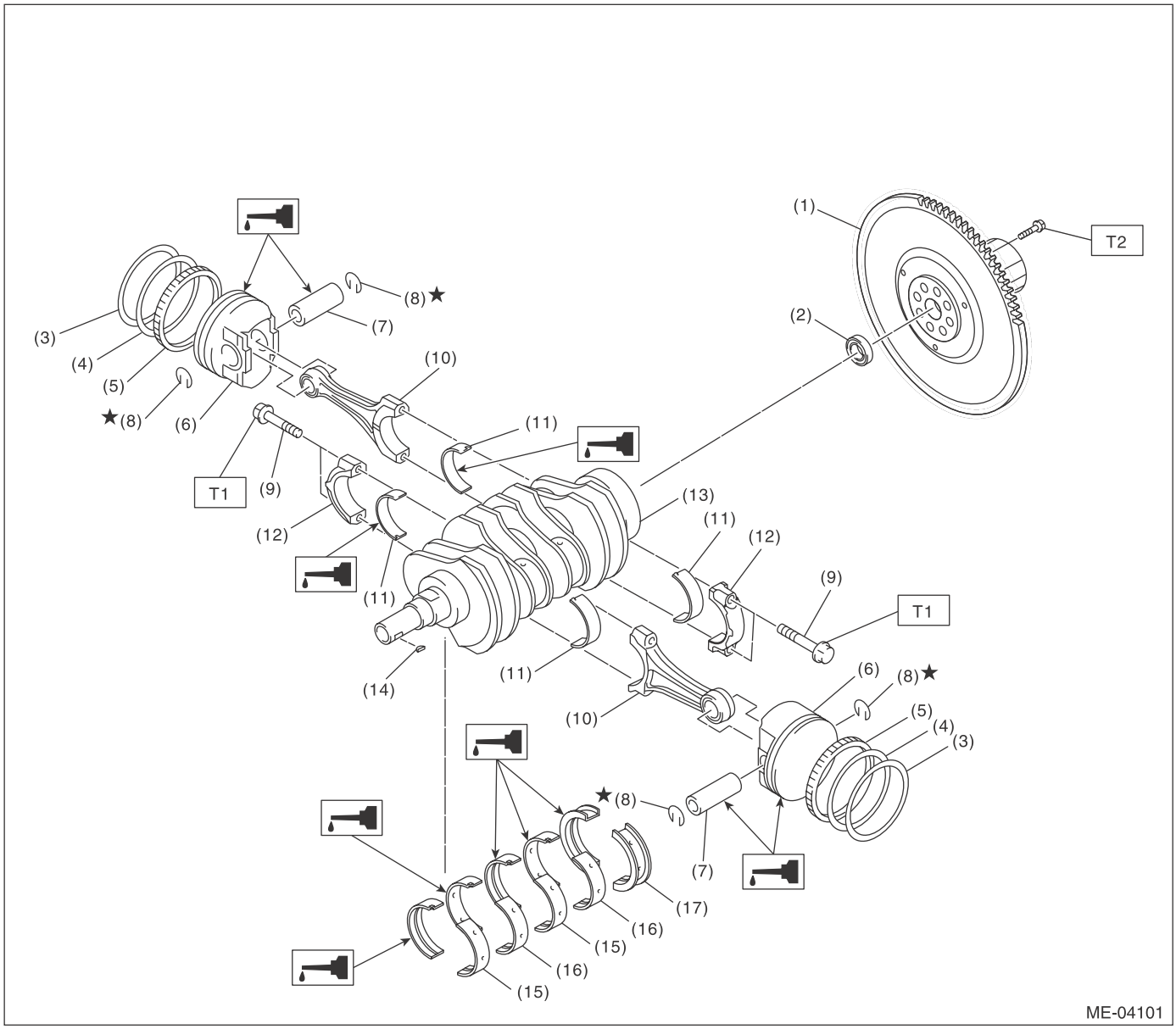

(1) Flywheel
(2) Ball bearing
(3) Top ring
(4) Second ring
(5) Oil ring
(6) Piston
(7) Piston pin
(8) Snap ring
(9) Connecting rod bolt
(10) Connecting rod
(11) Connecting rod bearing
(12) Connecting rod cap
(13) Crankshaft
(14) Woodruff key
(15) Crankshaft bearing #1, #3
(16) Crankshaft bearing #2, #4
(17) Crankshaft bearing #5

Tightening torque:N·m (kgf-m, ft-lb)
T1: 52 (5.3, 38.4)
T2: <Ref. to CL-14, INSTALLATION, Flywheel.>

7. ENGINE MOUNTING

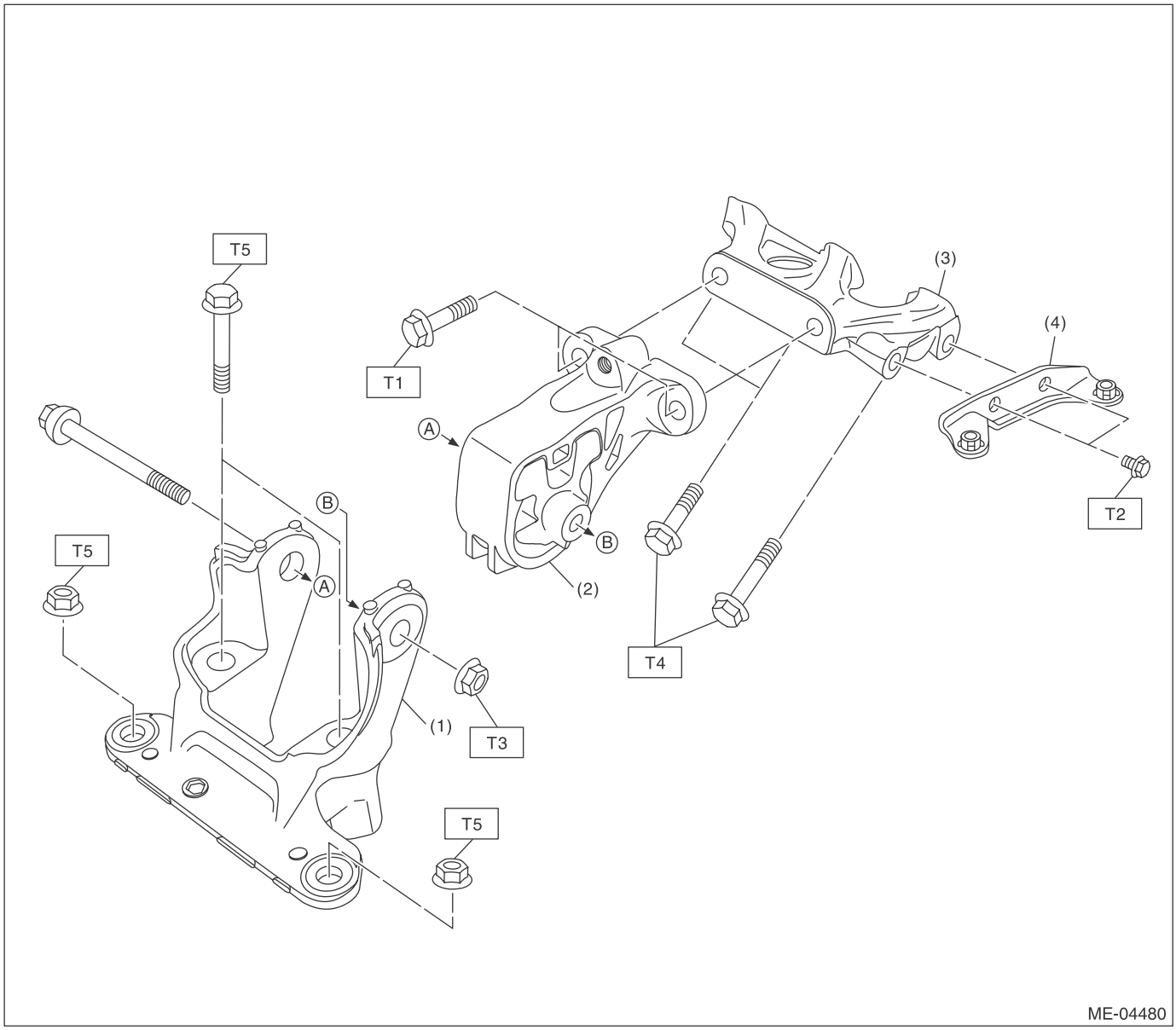

(1) Front mounting bracket
(2) Front cushion rubber
(3) Engine mounting bracket
(4) Turbocharger upper stay

Tightening torque:N·m (kgf-m, ft-lb)
T1: 25 (2.5, 18.4)
T2: 33 (3.4, 24.3)
T3: 45 (4.6, 33.2)
T4: 58 (5.9, 42.8)
T5: 60 (6.1, 44.3)

C: CAUTION

- Wear appropriate work clothing, including a cap, protective goggles and protective shoes when performing any work.
- Remove contamination including dirt and corrosion before removal, installation or disassembly.
- Keep the disassembled parts in order and protect them from dust and dirt.
- Before removal, installation or disassembly, be sure to clarify the failure. Avoid unnecessary removal, installation, disassembly and replacement.
- Vehicle components are extremely hot after driving. Be wary of receiving burns from heated parts.
- Be sure to tighten fasteners including bolts and nuts to the specified torque.
- Place shop jacks or rigid racks at the specified points.
- Before disconnecting connectors of sensors or units, be sure to disconnect the ground cable from the battery.
- All parts should be thoroughly cleaned, paying special attention to engine oil passages, pistons and bearings.
- Rotating parts and sliding parts such as piston, bearing and gear should be coated with oil prior to assembly.
- Be careful not to let oil, grease or engine coolant contact the timing belt, clutch disc and flywheel.
- All removed parts, if to be reused, should be reinstalled in the original positions and directions.
- Bolts, nuts and washers should be replaced with new parts as required.
- Even if necessary inspections have been made in advance, proceed with assembly work while making rechecks.
- Remove or install the engine in an area where chain hoists, lifting devices, etc. are available for ready use.
- Be sure not to damage coated surfaces of body panels with tools, or not to stain seats and windows with coolant or oil. Place a cover over fender, as required, for protection.
- Prior to starting work, prepare the following:

Service tools, clean cloth, containers to catch coolant and oil, wire ropes, chain hoist, transmission jacks, etc.

- Lift up or lower the vehicle when necessary. Make sure to support the correct positions.

D: PREPARATION TOOL

1. SPECIAL TOOL

ILLUSTRATION	TOOL NUMBER	DESCRIPTION	REMARKS
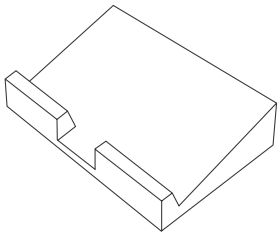 ST-498267600	498267600	CYLINDER HEAD TABLE	• Used for replacing valve guides. • Used for removing and installing valve spring.
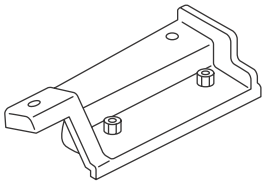 ST-498457000	498457000	ENGINE STAND ADAPTER RH	Used together with ENGINE STAND (499817100).
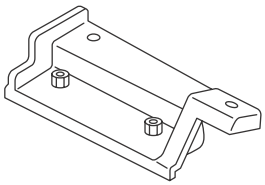 ST-498457100	498457100	ENGINE STAND ADAPTER LH	Used together with ENGINE STAND (499817100).
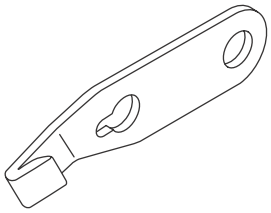 ST-498497100	498497100	CRANKSHAFT STOPPER	Used for removing and installing flywheel.

ILLUSTRATION	TOOL NUMBER	DESCRIPTION	REMARKS
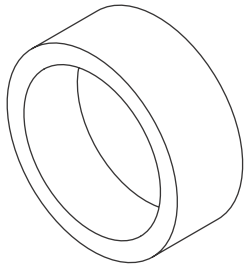 ST-498747300	498747300	PISTON GUIDE	Used for installing piston to cylinder.
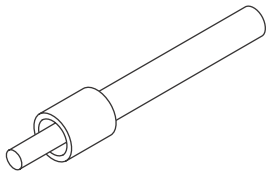 ST-498857100	498857100	VALVE OIL SEAL GUIDE	Used for press-fitting of intake and exhaust valve guide oil seals.
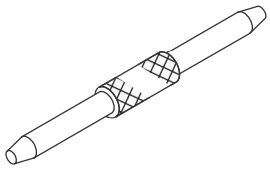 ST-499017100	499017100	PISTON PIN GUIDE	Used for installing piston pin, piston and connecting rod.
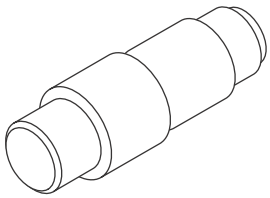 ST-499037100	499037100	CONNECTING ROD BUSHING REMOVER AND INSTALLER	Used for removing and installing connecting rod bushing.
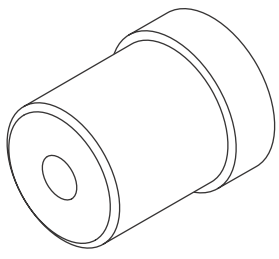 ST-499587100	499587100	OIL SEAL INSTALLER	Used for installing oil pump oil seal.

ILLUSTRATION	TOOL NUMBER	DESCRIPTION	REMARKS
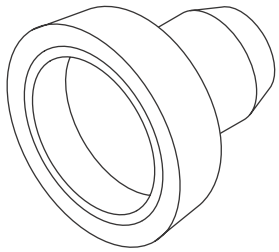 ST-499587200	499587200	CRANKSHAFT OIL SEAL INSTALLER	• Used for installing crankshaft oil seal. • Used together with CRANKSHAFT OIL SEAL GUIDE (499597100).
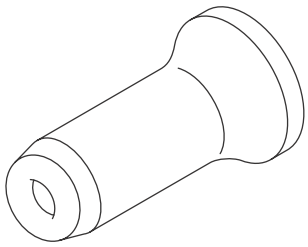 ST-499587600	499587600	OIL SEAL INSTALLER	Used for installing the camshaft oil seal.
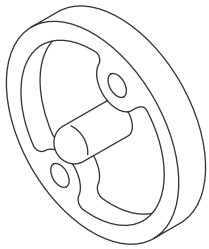 ST-499597100	499597100	CRANKSHAFT OIL SEAL GUIDE	• Used for installing crankshaft oil seal. • Used together with CRANKSHAFT OIL SEAL INSTALLER (499587200).
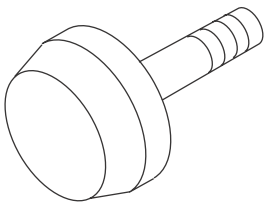 ST-499597200	499597200	OIL SEAL GUIDE	• Used for installing the camshaft oil seal. • Used together with OIL SEAL INSTALLER (499587600).
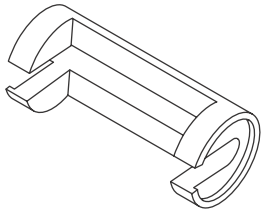 ST-499718000	499718000	VALVE SPRING REMOVER	Used for removing and installing valve spring.

ILLUSTRATION	TOOL NUMBER	DESCRIPTION	REMARKS
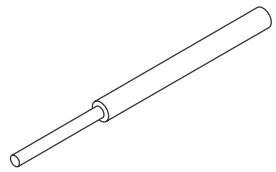 ST-499767200	499767200	VALVE GUIDE REMOVER	Used for removing valve guides.
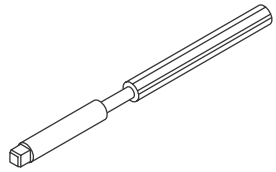 ST-499767400	499767400	VALVE GUIDE REAMER	Used for reaming valve guides.
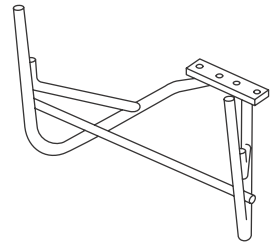 ST-499817100	499817100	ENGINE STAND	• Used for disassembling and assembling engine. • Used together with ENGINE STAND ADAPTER RH (498457000) & LH (498457100).
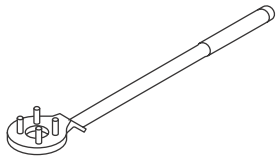 ST-499977100	499977100	CRANK PULLEY WRENCH	Used for removing and installing the crank pulley.
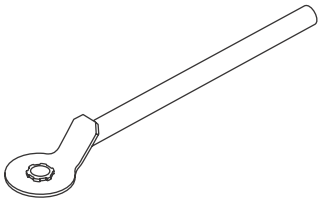 ST-499977500	499977500	CAM SPROCKET WRENCH	Used for removing and installing intake cam sprocket and exhaust cam sprocket.

ILLUSTRATION	TOOL NUMBER	DESCRIPTION	REMARKS
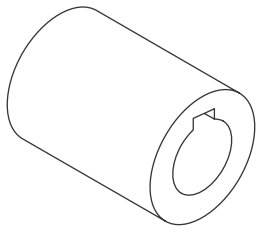 ST-499987500	499987500	CRANKSHAFT SOCKET	Used for rotating crankshaft.
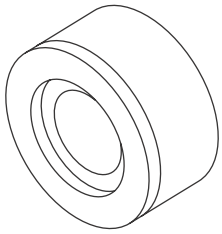 ST18251AA020	18251AA020	VALVE GUIDE ADJUSTER	Used for installing intake and exhaust valve guides.
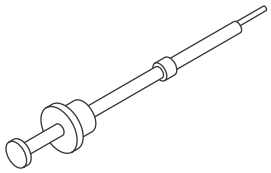 ST-499097700	499097700	PISTON PIN REMOVER ASSY	Used for removing piston pin.
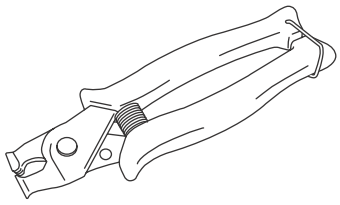 ST18353AA000	18353AA000	CLAMP PLIERS	• Used for removing and installing the PCV hose. • This tool is made by the French company CAILLAU. (code) 54.0.000.205 To make it easier to obtain, it has been provided with a tool number.
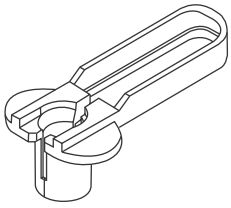 ST18371AA000	18371AA000	CONNECTOR REMOVER	Used for disconnecting the quick connector on the fuel return hose of the engine compartment (intake manifold).

ILLUSTRATION	TOOL NUMBER	DESCRIPTION	REMARKS
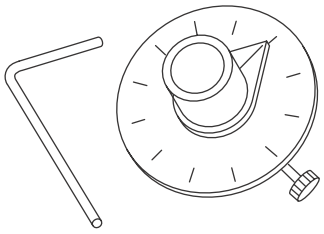 ST18854AA000	18854AA000	ANGLE GAUGE	Used for installing the crank pulley.
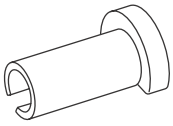 ST42099AE000	42099AE000	QUICK CONNECTOR RELEASE	Used for disconnecting quick connector of the engine compartment.
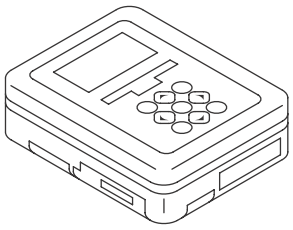 ST1B022XU0	1B022XU0	SUBARU SELECT MONITOR III KIT	Used for each inspection.

2. GENERAL TOOL

TOOL NAME	REMARKS
Compression gauge	Used for measuring compression.
Timing light	Used for measuring ignition timing.
Vacuum gauge	Used for measuring intake manifold vacuum.
Oil pressure gauge	Used for measuring engine oil pressure.
Fuel pressure gauge	Used for measuring fuel pressure.

2. Compression

A: INSPECTION

CAUTION:
After warming-up, engine becomes very hot. Be careful not to burn yourself during measurement.

1) Remove the collector cover.
2) After warming-up the engine, turn the ignition switch to OFF.
3) Make sure that the battery is fully charged.
4) Remove the fuse of fuel pump from main fuse box.

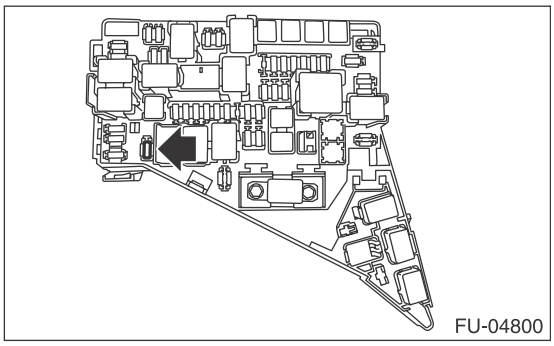

5) Start the engine and run it until it stalls.
6) After the engine stalls, crank it for five more seconds.
7) Turn the ignition switch to OFF.
8) Remove all spark plugs. <Ref. to IG(H4DOTC)-4, REMOVAL, Spark Plug.>
9) Fully open the throttle valve.
10) Check the starter motor for satisfactory performance and operation.
11) Install the compression gauge to the spark plug hole.

NOTE:
When using a screw-in type compression gauge, the screw should be less than 18 mm (0.71 in) long.

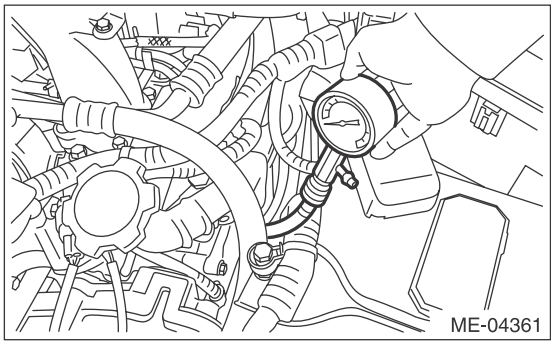

12) Crank the engine by starter motor and read the value when the needle of the compression gauge becomes stable.

NOTE:
• Perform at least two measurements per cylinder, and make sure that the values are correct.
• If the compression pressure is out of standard, check or adjust the pistons, valves and cylinders.

Compression (fully open throttle):
Standard
981 — 1,177 kPa (10 — 12 kgf/cm^2, 142 — 171 psi)
Difference between cylinders
49 kPa (0.5 kgf/cm^2, 7 psi) or less

13) After inspection, install the related parts in the reverse order of removal.

3. Idle Speed

A: INSPECTION

1) Before checking the idle speed, check the following item:
   (1) Check the air cleaner element is free from clogging, ignition timing is correct, spark plugs are in good condition, and hoses are connected properly.
   (2) Check the malfunction indicator light does not illuminate.
2) Warm up the engine.
3) Read the engine idle speed using Subaru Select Monitor. <Ref. to EN(H4DOTC)(diag)-37, READ CURRENT DATA FOR ENGINE (NORMAL MODE), OPERATION, Subaru Select Monitor.>

NOTE:
• Idle speed cannot be adjusted manually, because the idle speed is automatically adjusted.
• If idle speed is out of standard, refer to the General Diagnosis Table under “Engine Control System”. <Ref. to EN(H4DOTC)(diag)-2, Basic Diagnostic Procedure.>
   (1) Check the idle speed when no-loaded. (Headlight, heater fan, rear defroster, radiator fan, A/C and etc. are OFF)

Idle speed (No load and gear shift lever in neutral position):
Standard
700±100 rpm
   (2) Check the idle speed when loaded. (Turn the A/C switch to “ON” and operate the compressor for at least one minute before measurement.)

Idle speed (A/C ON and gear shift lever in neutral position):
Standard
700 — 850±100 rpm

4. Ignition Timing

A: INSPECTION

CAUTION:
After warming-up, engine becomes very hot. Be careful not to burn yourself at measurement.

1. METHOD WITH SUBARU SELECT MONITOR

1) Before checking the ignition timing, check the following item:
   (1) Check the air cleaner element is free from clogging, spark plugs are in good condition, and hoses are connected properly.
   (2) Check the malfunction indicator light does not illuminate.
2) Warm up the engine.
3) Read the ignition timing using Subaru Select Monitor. <Ref. to EN(H4DOTC)(diag)-37, READ CURRENT DATA FOR ENGINE (NORMAL MODE), OPERATION, Subaru Select Monitor.>

NOTE:
If ignition timing is out of standard, check the ignition control system. Refer to “Engine Control System”. <Ref. to EN(H4DOTC)(diag)-2, Basic Diagnostic Procedure.>

Ignition timing [BTDC/rpm]:
Standard
15°±10°/700

2. METHOD WITH TIMING LIGHT

1) Before checking the ignition timing, check the following item:
   (1) Check the air cleaner element is free from clogging, spark plugs are in good condition, and hoses are connected properly.
   (2) Check the malfunction indicator light does not illuminate.
2) Warm up the engine.
3) Stop the engine, and turn the ignition switch to OFF.
4) Remove the collector cover.
5) Disconnect the ground cable from battery.

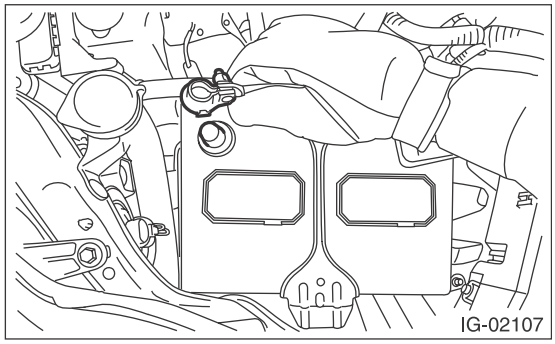

6) Remove the air intake duct. <Ref. to IN(H4DOTC)-12, REMOVAL, Air Intake Duct.>
7) Remove the air cleaner case. <Ref. to IN(H4DOTC)-8, REMOVAL, Air Cleaner Case.>
8) Connect the timing light to the power wire of #1 ignition coil.
9) Install the air cleaner case. <Ref. to IN(H4DOTC)-8, INSTALLATION, Air Cleaner Case.>
10) Connect the ground cable to battery.

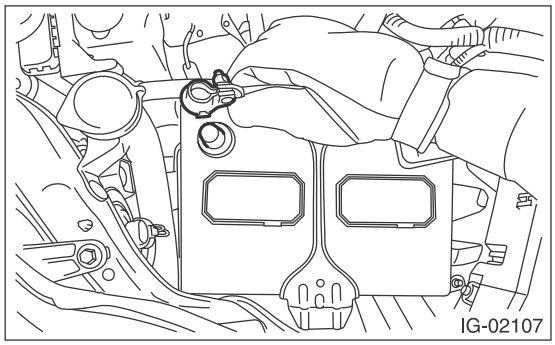

11) Start the engine, turn the timing light to the crank pulley, and check the ignition timing through the timing belt cover gauge.

NOTE:
If ignition timing is out of standard, check the ignition control system. Refer to “Engine Control System”. <Ref. to EN(H4DOTC)(diag)-2, Basic Diagnostic Procedure.>

Ignition timing [BTDC/rpm]:
Standard
15°±10°/700
12) After inspection, install the related parts in the reverse order of removal.

5. Intake Manifold Vacuum

A: INSPECTION

1) Warm up the engine.
2) Remove the collector cover.
3) Remove the intercooler. <Ref. to IN(H4DOTC)-17, REMOVAL, Intercooler.>
4) Disconnect the brake booster vacuum hose from the intake manifold, and attach the vacuum gauge.

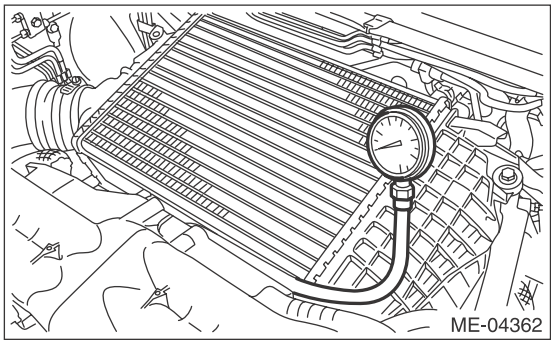

5) Install the intercooler. <Ref. to IN(H4DOTC)-18, INSTALLATION, Intercooler.>
6) Keep the engine at idle speed and read the vacuum gauge indication.

NOTE:
Condition of engine inside can be diagnosed by observing the behavior of the vacuum gauge needle as described in table below.

Intake manifold vacuum (at idling, A/C OFF):
Standard
–66.7 kPa (–500 mmHg, –19.70 inHg) or more

7) After inspection, install the related parts in the reverse order of removal.

Diagnosis of engine condition by inspection of intake manifold vacuum	
Vacuum gauge needle behavior	Possible engine condition
1. Needle is steady but lower than standard value. This tendency becomes more evident as engine temperature rises.	Leakage around intake manifold gasket, or disconnected or damaged vacuum hose
2. Needle intermittently drops to position lower than standard value.	Leakage around cylinder
3. Needle drops suddenly and intermittently from standard value.	Sticky valve
4. When engine speed is gradually increased, needle begins to vibrate rapidly at certain speed, and then vibration increases as engine speed increases.	Weak or broken valve springs
5. Needle vibrates above and below standard value in narrow range.	Defective ignition system

6. Engine Oil Pressure

A: INSPECTION

1) Remove the collector cover.
2) Disconnect the ground cable from battery.

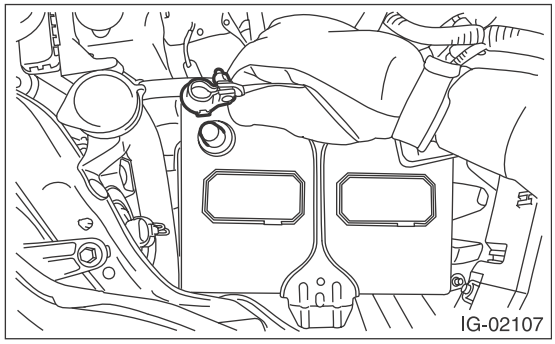

3) Remove the oil pressure switch. <Ref. to LU(H4SO)-23, REMOVAL, Oil Pressure Switch.>
4) Attach the oil pressure gauge to the cylinder block.

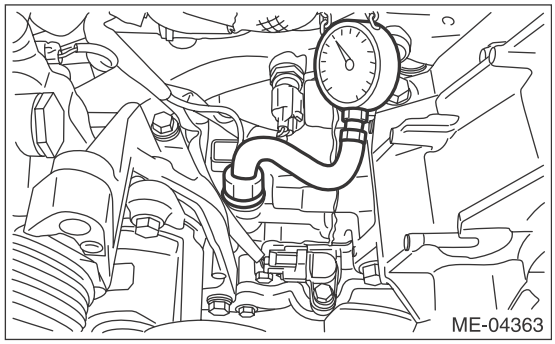

5) Connect the ground cable to battery.

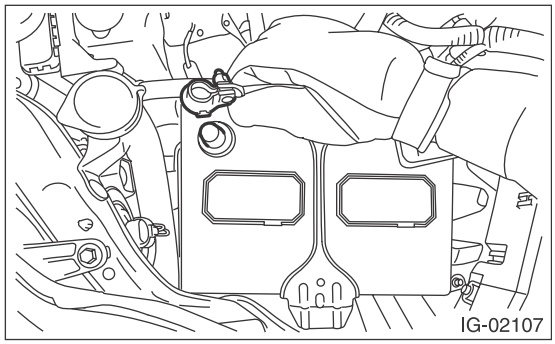

6) Start the engine, and measure the oil pressure.

NOTE:
• Standard value is based on an engine oil temperature of 80°C (176°F).
• If the oil pressure is out of specification, check oil pump, oil filter and lubrication line. <Ref. to LU(H4SO)-42, INSPECTION, Engine Lubrication System Trouble in General.>
• If the oil pressure warning light is ON and oil pressure is within specification, check the oil pressure switch. <Ref. to LU(H4SO)-42, INSPECTION, Engine Lubrication System Trouble in General.>

Engine oil pressure:
Standard
98 kPa (1.0 kgf/cm^2, 14 psi) or more (at 600 rpm)
392 kPa (4.0 kgf/cm^2, 57 psi) or more (at 6,000 rpm)

7) After inspection, install the related parts in the reverse order of removal.

7. Fuel Pressure

A: INSPECTION

CAUTION:
• Before removing the fuel pressure gauge, release the fuel pressure.
• Be careful not to spill fuel.
• Catch the fuel from hoses using a container or cloth.

1) Remove the collector cover.
2) Release the fuel pressure. <Ref. to FU(H4DOTC)-65, RELEASING OF FUEL PRESSURE, PROCEDURE, Fuel.>
3) Open the fuel filler lid and remove the fuel filler cap.
4) Disconnect the fuel delivery hose from the fuel damper, and connect the fuel pressure gauge.

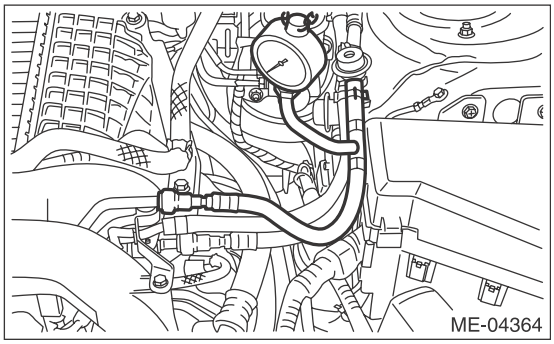

5) Start the engine.
6) Measure the fuel pressure while disconnecting pressure regulator vacuum hose from intake manifold.

NOTE:
• The fuel pressure gauge registers 10 to 20 kPa (0.1 to 0.2 kgf/cm^2, 1 to 3 psi) higher than standard values during high-altitude operations.
• If the fuel pressure is out of specification, check or replace the fuel pump, fuel line, pressure regulator and pressure regulator vacuum hose.

Fuel pressure:
Standard
328 — 358 kPa (3.3 — 3.7 kgf/cm^2, 48 — 52 psi)

7) After connecting the vacuum hose to the pressure regulator, measure the fuel pressure again.

NOTE:
• The fuel pressure gauge registers 10 to 20 kPa (0.1 to 0.2 kgf/cm^2, 1 to 3 psi) higher than standard values during high-altitude operations.
• If the fuel pressure is out of specification, check or replace the fuel pump, fuel line, pressure regulator and pressure regulator vacuum hose.

Fuel pressure:
Standard
274 — 304 kPa (2.8 — 3.1 kgf/cm^2, 40 — 44 psi)

8) After inspection, install the related parts in the reverse order of removal.

8. Valve Clearance

A: INSPECTION

1) Remove the collector cover.
2) Disconnect the ground cable from battery.

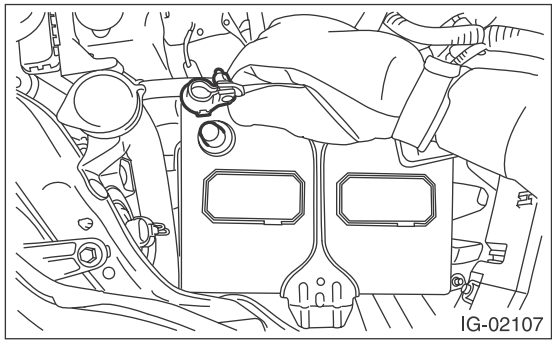

3) Remove the engine from vehicle. <Ref. to ME(H4DOTC)-31, REMOVAL, Engine Assembly.>
4) When inspecting #1 and #3 cylinders
   (1) Remove the timing belt cover RH. <Ref. to ME(H4DOTC)-51, TIMING BELT, REMOVAL, Timing Belt.>
   (2) Disconnect the connectors from exhaust oil flow control solenoid valve RH (A) and exhaust camshaft position sensor RH (B).

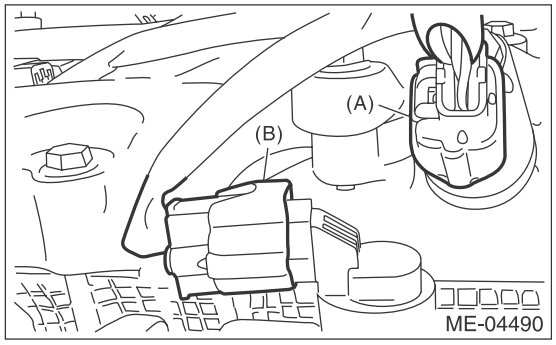

   (3) Remove the clip which holds the engine harness to the rocker cover.

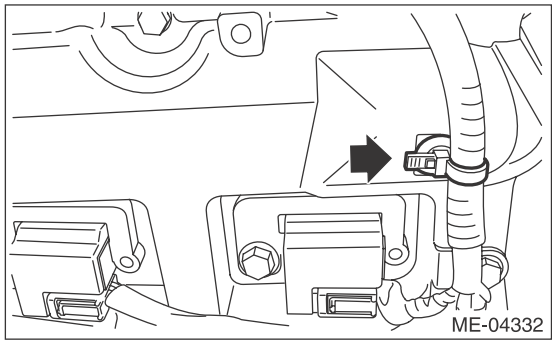

   (4) Remove the ignition coil. <Ref. to IG(H4DOTC)-6, REMOVAL, Ignition Coil.>
   (5) Disconnect PCV hose and vacuum hose from the rocker cover RH.

NOTE:
Pinch the clamp of the PCV hose by fitting the cut out in the ST with the protrusion on the clamp as shown in the figure, and unlock the clamp.
ST 18353AA000 CLAMP PLIERS

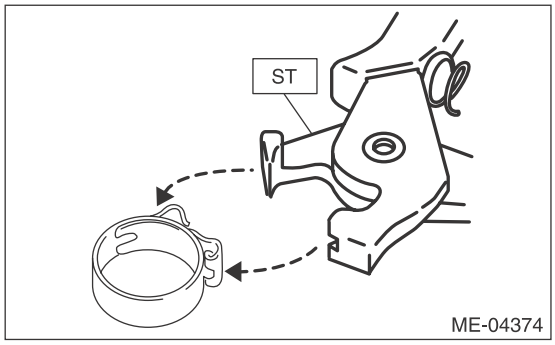

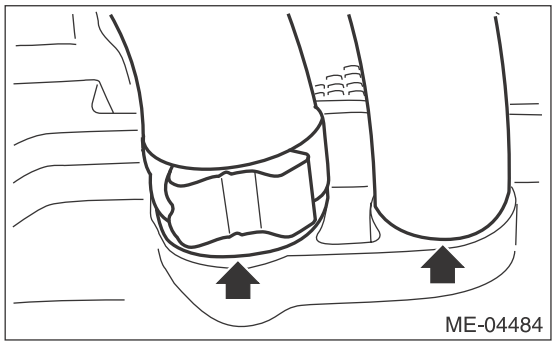

   (6) Remove the rocker cover RH.
5) When inspecting #2 and #4 cylinders
   (1) Remove the timing belt cover LH. <Ref. to ME(H4DOTC)-51, REMOVAL, Timing Belt.>
   (2) Disconnect the connectors from exhaust oil flow control solenoid valve LH (A) and exhaust camshaft position sensor LH (B).

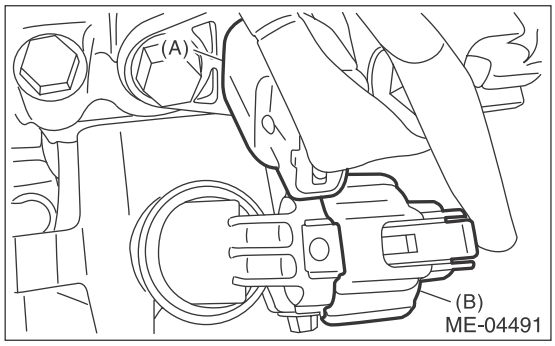

   (3) Disconnect the oil level switch connector.

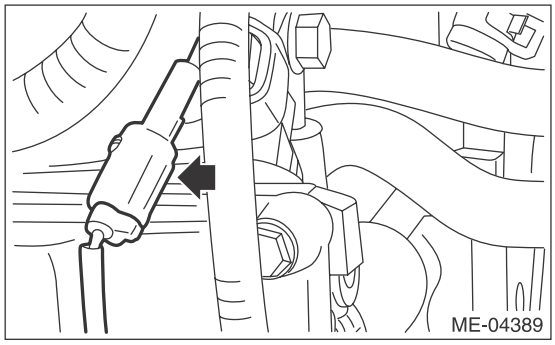

(4) Remove the clip (A) and bolt (B) securing the engine harness or oil level switch harness to the rocker cover LH.

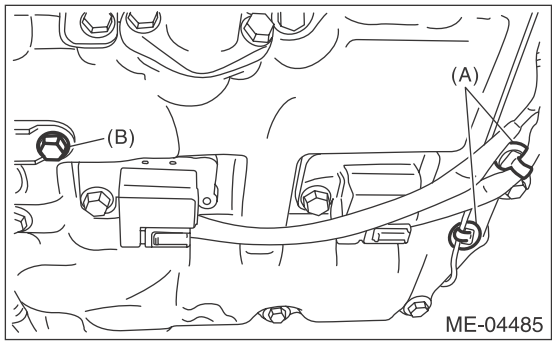

(5) Remove the ignition coil. <Ref. to IG(H4DOTC)-6, REMOVAL, Ignition Coil.>
(6) Disconnect PCV hose and vacuum hose from the rocker cover LH.

NOTE:
Pinch the clamp of the PCV hose by fitting the cut out in the ST with the protrusion on the clamp as shown in the figure, and unlock the clamp.
ST 18353AA000 CLAMP PLIERS

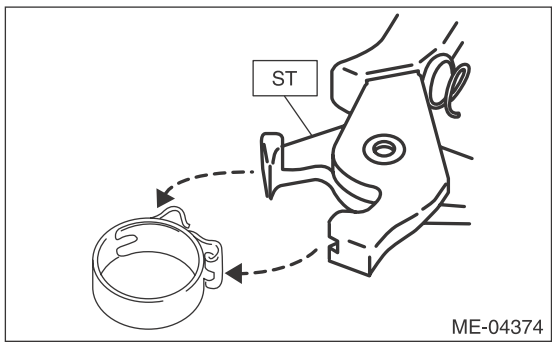

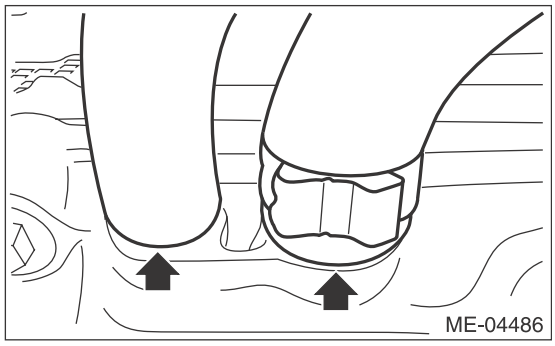

(7) Remove the rocker cover LH.

6) Turn the crank pulley clockwise until the round mark on the cam sprocket are set to position shown in the figure.

NOTE:
Turn the crank pulley using a socket wrench.

• Measuring the clearance of #1 cylinder of intake valve and #3 cylinder of exhaust valve

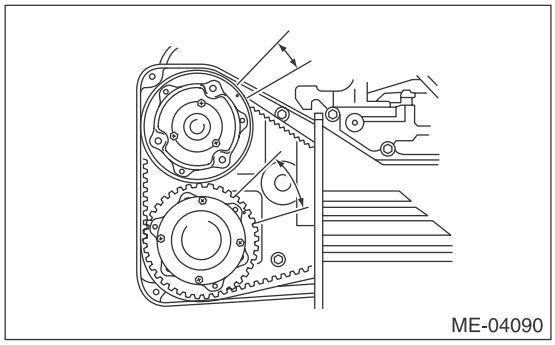

• Measuring the clearance of #2 cylinder of exhaust valve and #3 cylinder of intake valve

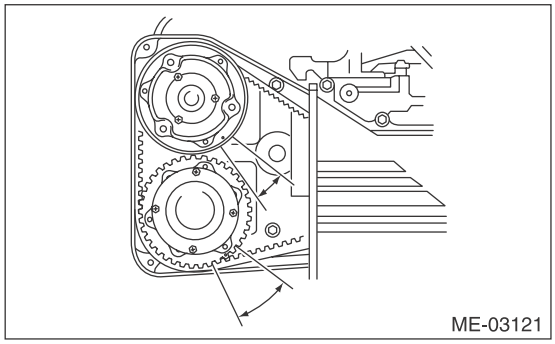

• Measuring the clearance of #2 cylinder of intake valve and #4 cylinder of exhaust valve

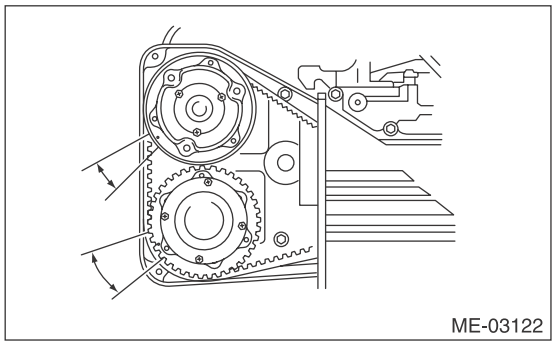

• Measuring the clearance of #1 cylinder of exhaust valve and #4 cylinder of intake valve

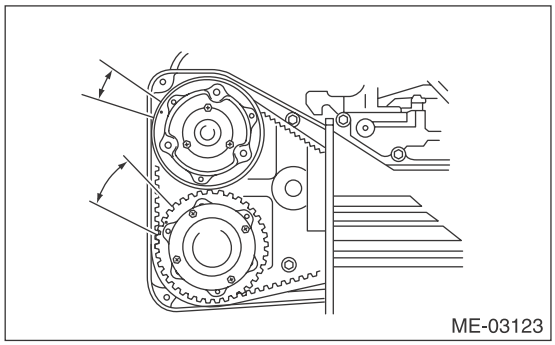

7) Measure the clearance of intake valve and exhaust valve using thickness gauge (A).

NOTE:
• Insert a thickness gauge in a direction as horizontal as possible with respect to the valve lifter.

• Lift up the vehicle, and then measure the exhaust valve clearances.
• If the measured value is not within the inspection value, take notes of the value in order to adjust the valve clearance later on.

Valve clearance (inspection value):
Intake
$0.20^{+0.04}_{-0.06}$ mm ($0.0079^{+0.0016}_{-0.0024}$ in)
Exhaust
0.35±0.05 mm (0.0138±0.0020 in)

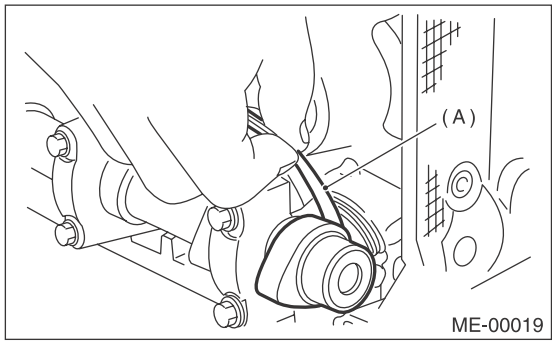

8) If necessary, adjust the valve clearance. <Ref. to ME(H4DOTC)-29, ADJUSTMENT, Valve Clearance.>
9) After inspection, install the related parts in the reverse order of removal.

NOTE:
• Refer to “Camshaft” when installing the rocker cover. <Ref. to ME(H4DOTC)-65, INSTALLATION, Camshaft.>
• Use a new clamp for the PCV hose clamp, fit the cut out in the ST with the protrusion on the clamp as shown in the figure, and lock the clamp.
ST 18353AA000 CLAMP PLIERS

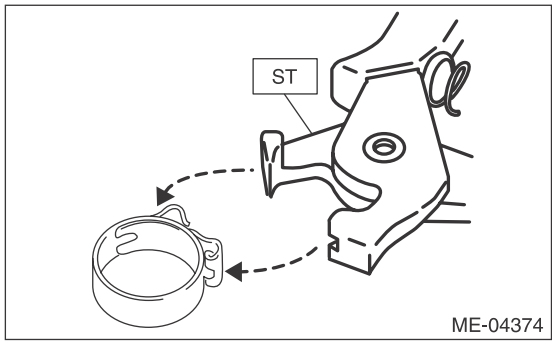

Tightening torque:
6.4 N·m (0.7 kgf-m, 4.7 ft-lb)

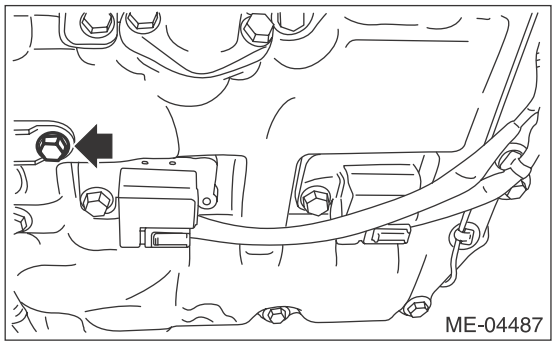

B: ADJUSTMENT

1) Measure all the valve clearances. <Ref. to ME(H4DOTC)-27, INSPECTION, Valve Clearance.>

NOTE:
Record the measured value of each valve clearance.

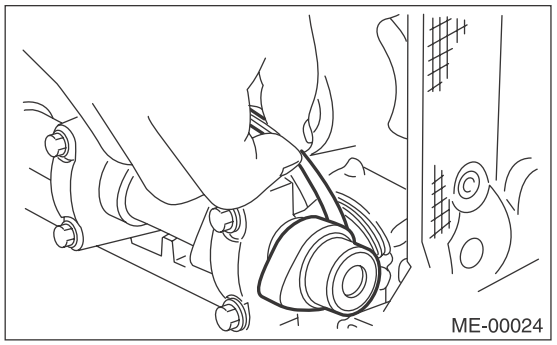

2) Remove the camshaft. <Ref. to ME(H4DOTC)-62, REMOVAL, Camshaft.>
3) Remove the valve lifter.
4) Measure the thickness of valve lifter using micrometer.

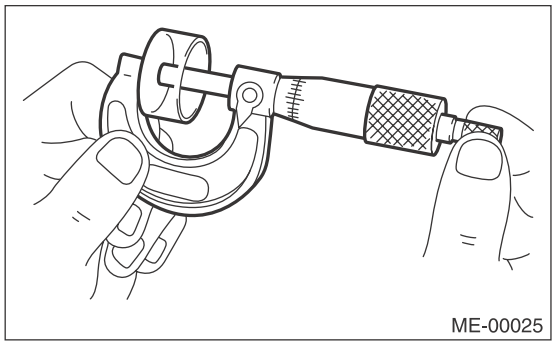

5) Select a valve lifter of suitable thickness using the measured valve clearance and valve lifter thickness, and install it.

NOTE:
Use a new valve lifter.

Unit: mm (in)
Intake valve: S = (V + T) – 0.19 (0.0075) Exhaust valve: S = (V + T) – 0.35 (0.0138)
S: Valve lifter thickness required V: Measured valve clearance T: Valve lifter thickness to be used

6) Install the camshaft. <Ref. to ME(H4DOTC)-65, INSTALLATION, Camshaft.>
7) Install the cam sprocket. <Ref. to ME(H4DOTC)-60, INSTALLATION, Cam Sprocket.>
8) Install the timing belt. <Ref. to ME(H4DOTC)-54, TIMING BELT, INSTALLATION, Timing Belt.>
9) Measure all valves for valve clearance again at this time. If the valve clearance is not within the adjustment value, repeat the procedure over again from the first step.

Valve clearance (adjustment value):
Intake
$0.20^{+0.01}_{-0.03}$ mm ($0.0079^{+0.0004}_{-0.0012}$ in)
Exhaust
0.35 ± 0.02 mm (0.0138 ± 0.0008 in)

10) After adjustment, install the related parts in the reverse order of removal.

NOTE:
• Refer to “Camshaft” when installing the rocker cover. <Ref. to ME(H4DOTC)-65, INSTALLATION, Camshaft.>
• Use a new clamp for the PCV hose clamp, fit the cut out in the ST with the protrusion on the clamp as shown in the figure, and lock the clamp.
ST 18353AA000 CLAMP PLIERS

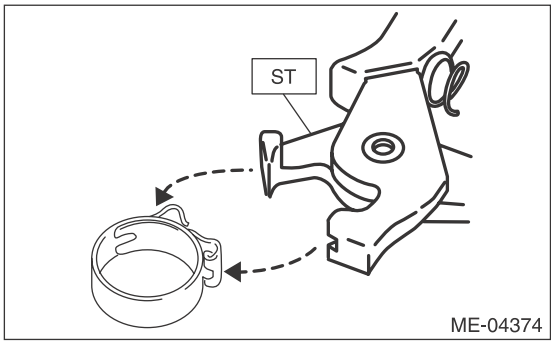

Tightening torque:
6.4 N·m (0.7 kgf-m, 4.7 ft-lb)

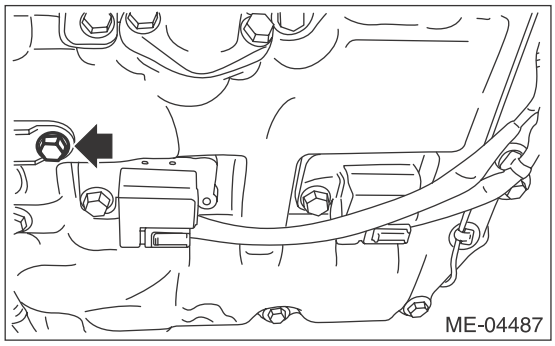

9. Engine Assembly

A: REMOVAL

1) Change the front hood damper mounting position from (A) to (B), and completely open the front hood.

Tightening torque:
20 N·m (2.0 kgf-m, 14.8 ft-lb)

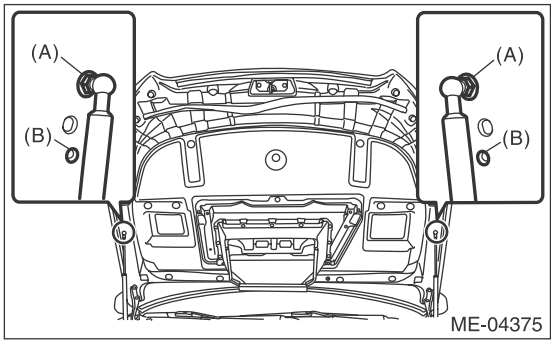

2) Remove the collector cover.
3) Collect the refrigerant from A/C system. <Ref. to AC-18, Refrigerant Recovery Procedure.>
4) Release the fuel pressure. <Ref. to FU(H4DOTC)-65, RELEASING OF FUEL PRESSURE, PROCEDURE, Fuel.>
5) Disconnect the ground cable from battery.

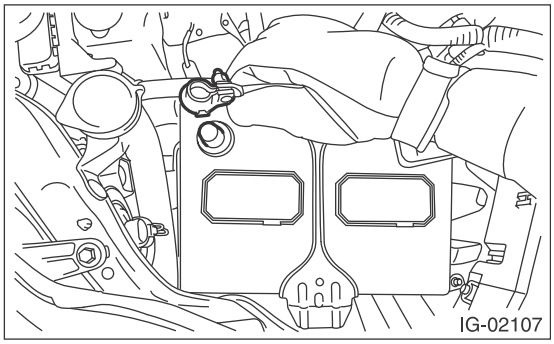

6) Open the fuel filler lid and remove the fuel filler cap.
7) Remove the air intake duct. <Ref. to IN(H4DOTC)-12, REMOVAL, Air Intake Duct.>
8) Remove the intercooler. <Ref. to IN(H4DOTC)-17, REMOVAL, Intercooler.>
9) Remove the air by-pass valve. <Ref. to IN(H4DOTC)-25, REMOVAL, Air By-pass Valve.>
10) Remove the radiator. <Ref. to CO(H4DOTC)-21, REMOVAL, Radiator.>
11) Remove the front exhaust pipe. <Ref. to EX(H4DOTC)-5, REMOVAL, Front Exhaust Pipe.>
12) Lower the vehicle.
13) Disconnect the bulkhead harness connector from the engine harness connector (brown).

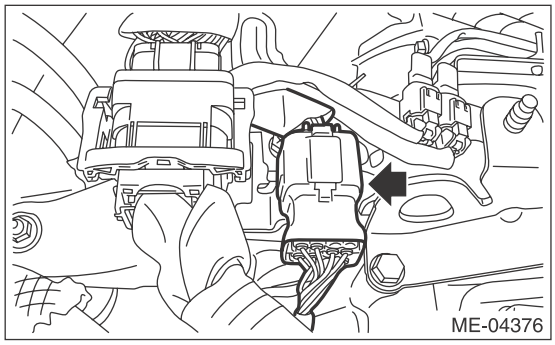

14) Remove the bolt securing the bulkhead harness connector bracket, and disconnect the bulkhead harness connector from the engine harness connector (black).

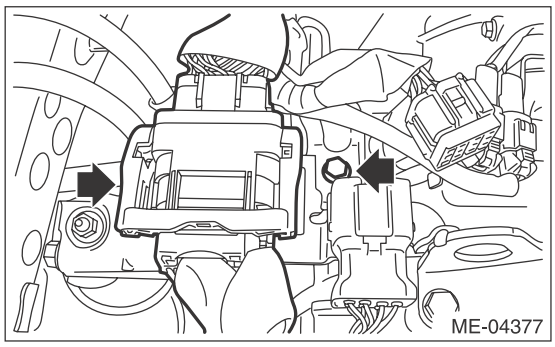

15) Disconnect the connector (A) and connector (B) from A/C compressor, and remove the clip (C) securing the generator cord to the intake manifold protector LH.

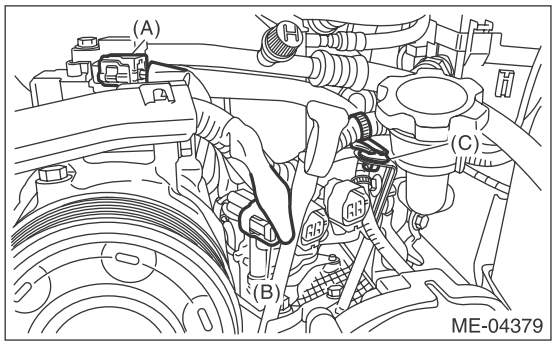

16) Disconnect the following hoses.
(1) A/C pressure hose <Ref. to AC-65, REMOVAL, Hose and Pipe.>

(2) Brake booster vacuum hose

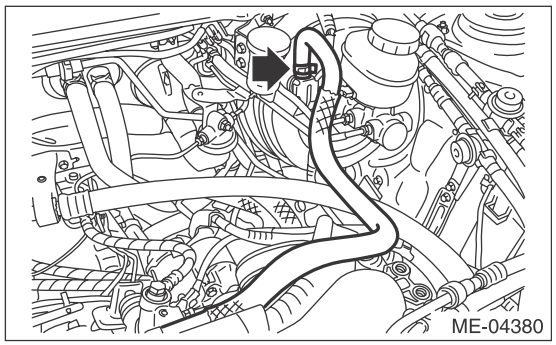

(3) Heater inlet hose and heater outlet hose

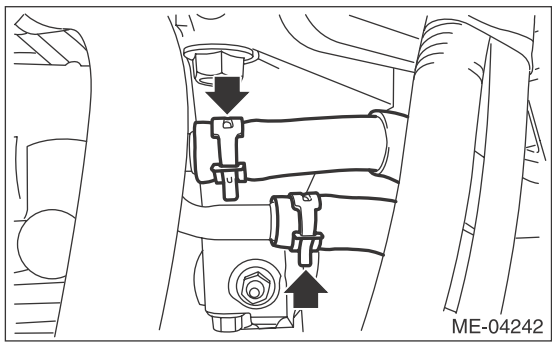

17) Lift up the vehicle.
18) Remove the intake duct from the air intake boot.

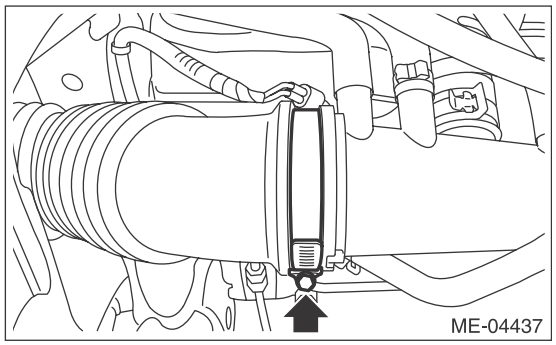

19) Disconnect the ground cable on the engine side, and remove the engine harness cover.

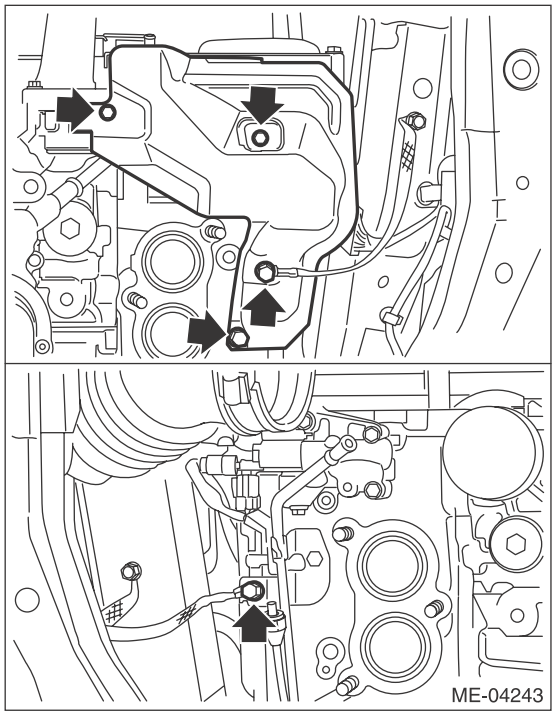

20) Lower the vehicle.
21) Attach ST to the fuel delivery pipe and push ST in the direction of arrow mark to disconnect the fuel delivery hose.
ST 42099AE000 QUICK CONNECTOR RELEASE

CAUTION:
- **Be careful not to spill fuel.**
- **Catch the fuel from hoses using a container or cloth.**

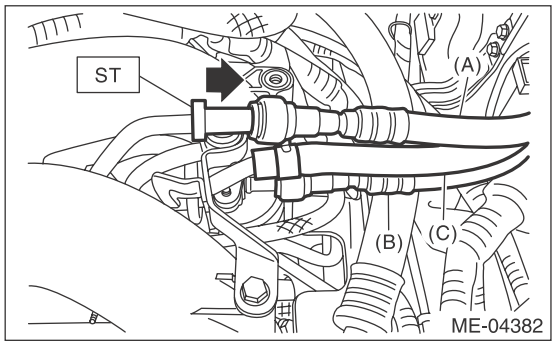

(A) Fuel delivery hose
(B) Fuel return hose
(C) Evaporation hose

22) Disconnect the fuel return hose using the ST.
ST 18371AA000 CONNECTOR REMOVER

CAUTION:
- **Be careful not to spill fuel.**
- **Catch the fuel from hoses using a container or cloth.**

(1) Attach ST to the fuel return pipe as shown in the figure.

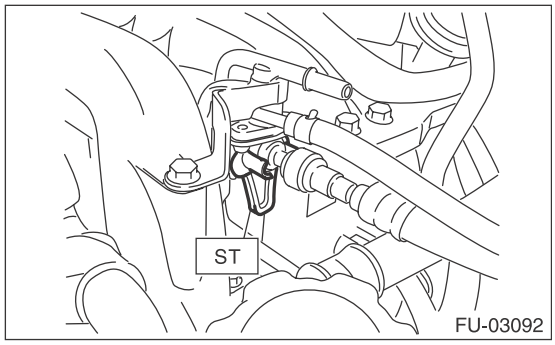

(2) Insert the front side of ST into the quick connector.

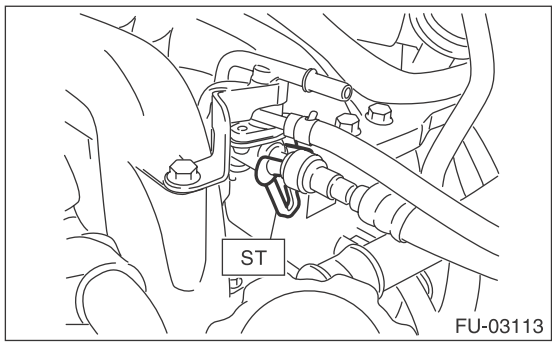

(3) Insert the back side of ST into the quick connector and push ST in the direction of arrow mark to disconnect the fuel return hose.

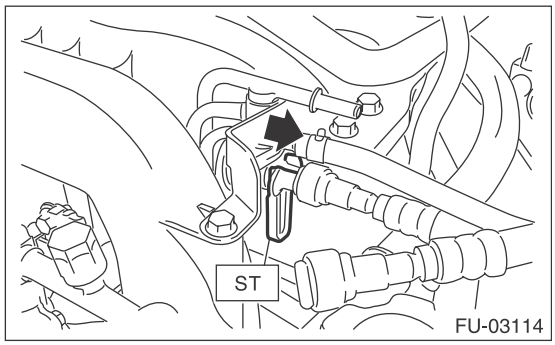

23) Remove the clip and disconnect the evaporation hose from the fuel pipe.

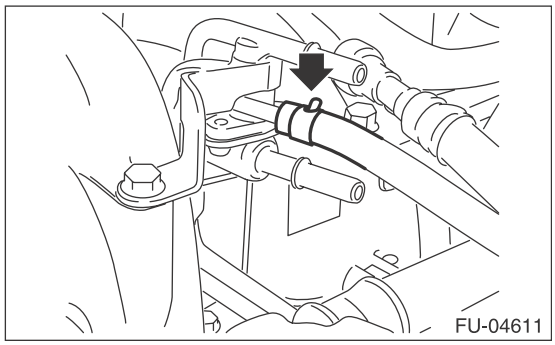

24) Support the engine with a lifting device and wire ropes.

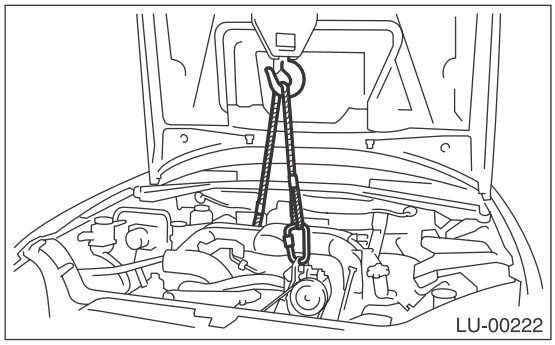

25) Remove the stopper rod.

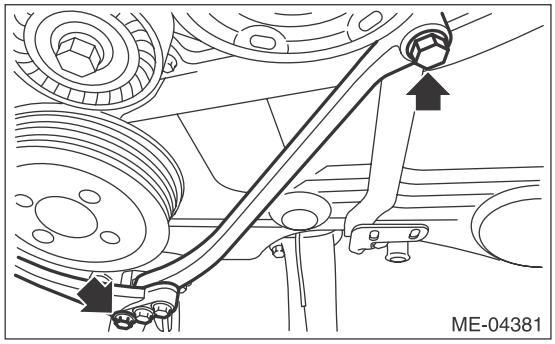

26) Remove the bolt and nut which secure engine mounting to the cradle.

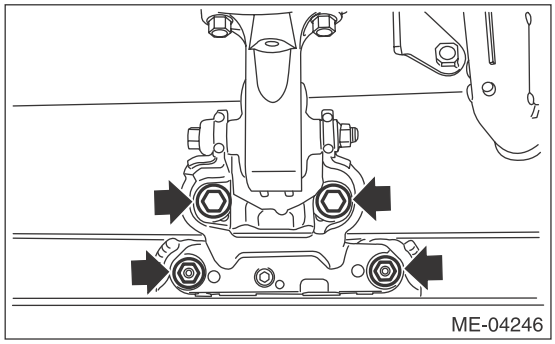

27) Lift up the vehicle.

CAUTION:
When lifting up the vehicle, raise up wire ropes at the same time.

28) Remove the bolts which secure the engine mounting onto the engine, and remove the engine mounting.

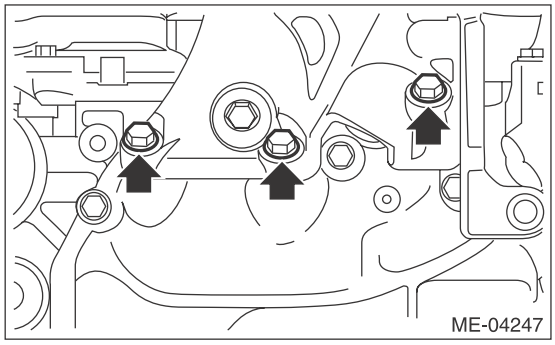

29) Remove the bolts and nuts which hold the lower side of transmission to the engine.

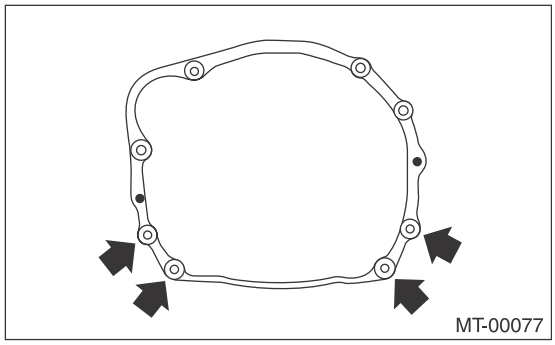

30) Lower the vehicle.

CAUTION:
When lifting down the vehicle, lower wire ropes at the same time.

31) Support the transmission with a garage jack.

NOTE:
Fine adjustment of the transmission height can be performed with this operation.

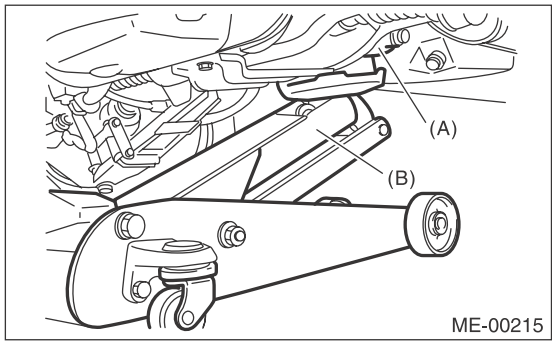

(A) TRANSMISSION
(B) Garage jack

32) Separation of engine and transmission

CAUTION:
Before removing the engine away from transmission, check to be sure no work has been overlooked.

(1) Remove the starter. <Ref. to SC(H4SO)-9, REMOVAL, Starter.>
(2) Remove the bolts which hold the upper side of the transmission to the engine.

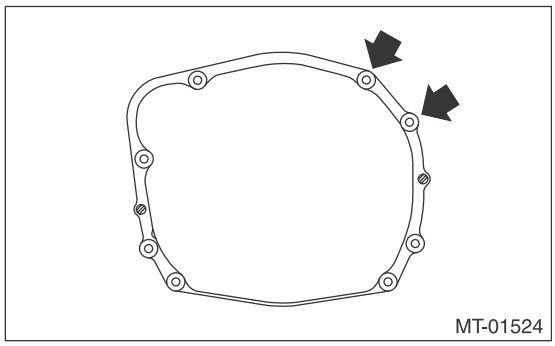

33) Remove the engine from vehicle.
(1) Slightly raise the engine.
(2) Adjust the height of the transmission with garage jack.
(3) Move the engine horizontally until main shaft is withdrawn from clutch cover.
(4) Move the engine from engine compartment slowly.

NOTE:
Be careful not to damage adjacent parts or body panels with crank pulley, oil level gauge, etc.

B: INSTALLATION

1) Apply a small amount of grease to splines of main shaft.

Grease:
NICHIMOLY N-130 or equivalent

2) Position the engine in engine compartment and align it with transmission.

NOTE:
Be careful not to damage adjacent parts or body panels with crank pulley, oil level gauge, etc.

3) Tighten the bolts which hold upper side of transmission to engine.

Tightening torque:
50 N·m (5.1 kgf-m, 36.9 ft-lb)

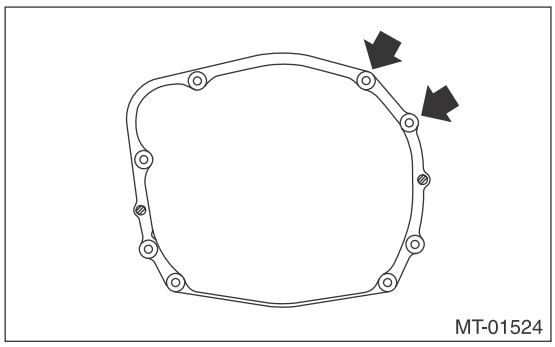

4) Remove the garage jack.
5) Install the starter. <Ref. to SC(H4SO)-9, INSTALLATION, Starter.>
6) Lift up the vehicle.

CAUTION:
When lifting up the vehicle, raise up wire ropes at the same time.

7) Attach the bolts and nuts which hold lower side of the transmission to engine.

Tightening torque:
50 N·m (5.1 kgf-m, 36.9 ft-lb)

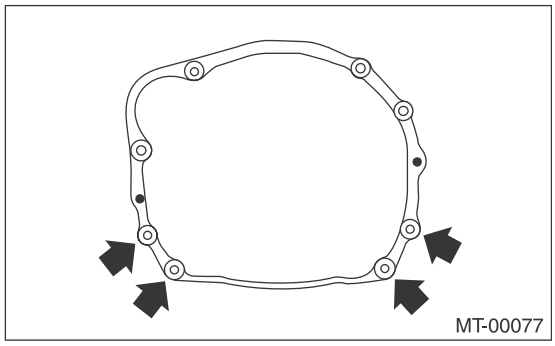

8) Set the engine mounting, and tighten the bolts which hold engine mounting to the engine.

Tightening torque:
58 N·m (5.9 kgf-m, 42.8 ft-lb)

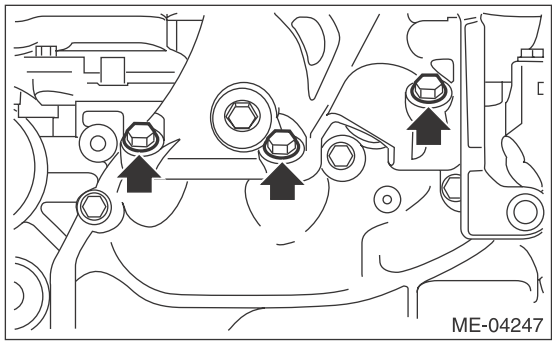

9) Lower the vehicle.

CAUTION:
When lifting down the vehicle, lower wire ropes at the same time.

10) Attach the bolts and nuts which secure engine mounting to the cradle.

Tightening torque:
60 N·m (6.1 kgf-m, 44.3 ft-lb)

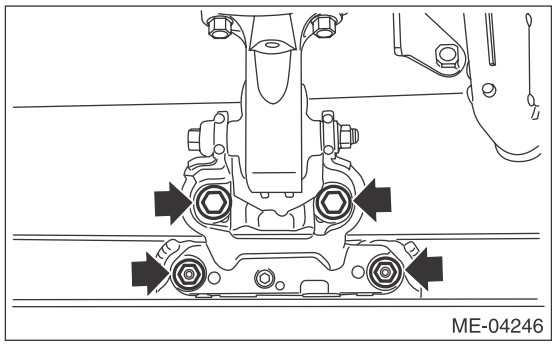

11) Install the stopper rod.

Tightening torque:
36 N·m (3.7 kgf-m, 26.6 ft-lb)

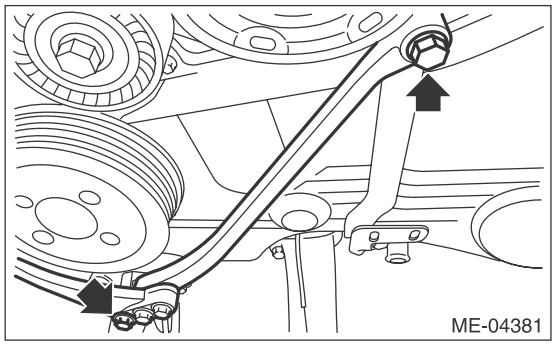

12) Remove the lifting device and wire ropes.

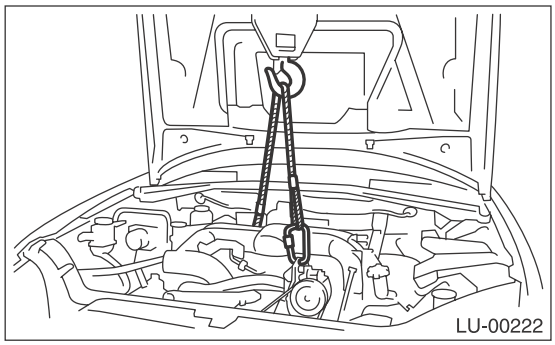

13) Lift up the vehicle.
14) Install the intake duct to the air intake boot.

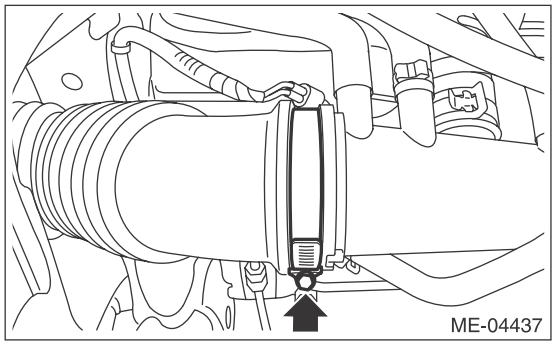

15) Install the engine harness cover, and connect the ground cable.

Tightening torque:
T1: 6.4 N·m (0.7 kgf-m, 4.7 ft-lb)
T2: 7 N·m (0.7 kgf-m, 5.2 ft-lb)

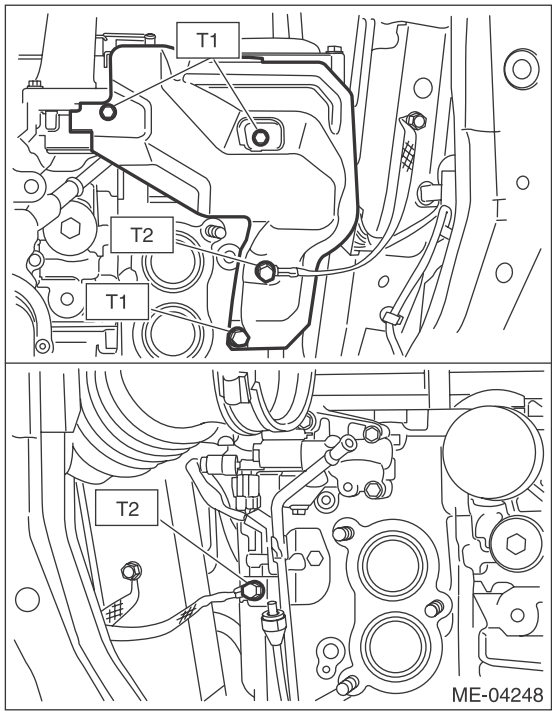

16) Lower the vehicle.
17) Connect the following hoses.
(1) Fuel delivery hose, fuel return hose and evaporation hose
(2) Heater inlet hose and heater outlet hose
(3) Brake booster vacuum hose
(4) A/C pressure hose <Ref. to AC-65, INSTALLATION, Hose and Pipe.>
18) Install the clip (C) securing the generator cord to the intake manifold protector LH, and connect the connector (A) and connector (B) to the A/C compressor.

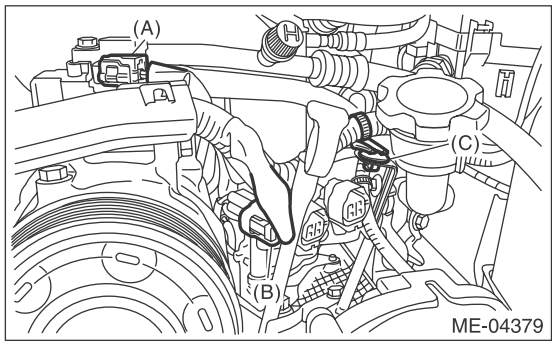

19) Connect the bulkhead harness connector to the engine harness connector (black), and install the bolt securing the bulkhead harness connector bracket.

Tightening torque:
6.4 N·m (0.7 kgf-m, 4.7 ft-lb)

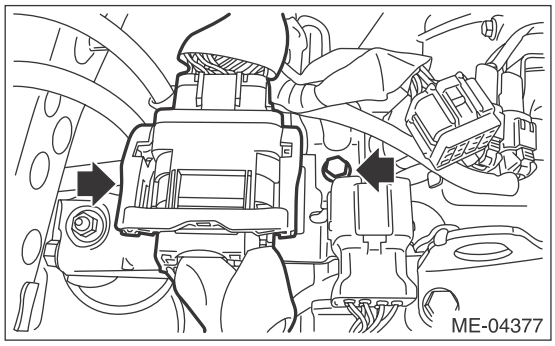

20) Connect the bulkhead harness connector to the engine harness connector (brown).

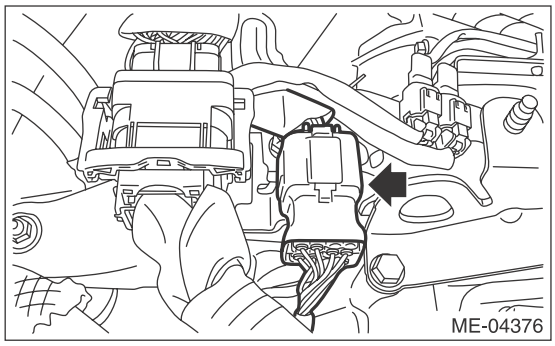

21) Install the front exhaust pipe. <Ref. to EX(H4DOTC)-7, INSTALLATION, Front Exhaust Pipe.>
22) Install the radiator. <Ref. to CO(H4DOTC)-22, INSTALLATION, Radiator.>
23) Install the air by-pass valve. <Ref. to IN(H4DOTC)-25, INSTALLATION, Air By-pass Valve.>
24) Install the intercooler. <Ref. to IN(H4DOTC)-18, INSTALLATION, Intercooler.>
25) Install the air intake duct. <Ref. to IN(H4DOTC)-12, INSTALLATION, Air Intake Duct.>
26) Connect the ground cable to battery.

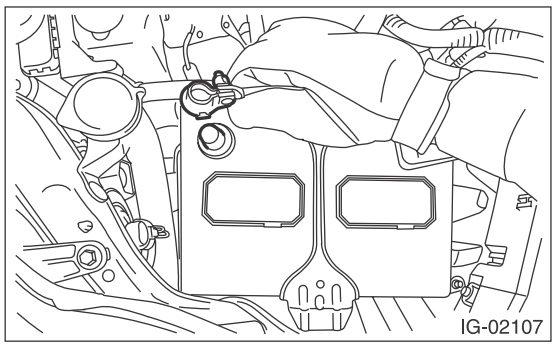

27) Fill engine coolant. <Ref. to CO(H4DOTC)-14, FILLING OF ENGINE COOLANT, REPLACEMENT, Engine Coolant.>
28) Charge the A/C system with refrigerant. <Ref. to AC-19, PROCEDURE, Refrigerant Charging Procedure.>

29) Install the collector cover.
30) Change the front hood damper mounting position from (B) to (A), and close the front hood.

Tightening torque:
20 N·m (2.0 kgf-m, 14.8 ft-lb)

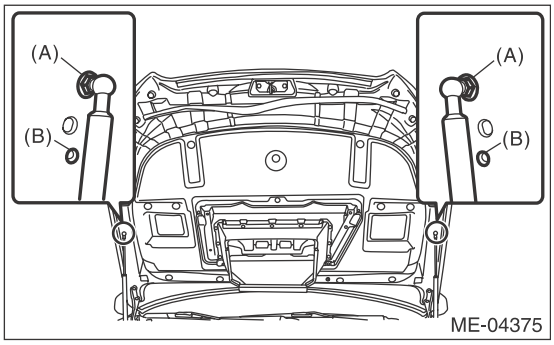

C: INSPECTION

1) Check that the pipes, hoses, connectors and clamps are securely connected.
2) Check that the engine coolant is up to specified level.
3) Start the engine and check for exhaust gas leakage, engine coolant leakage, fuel leakage, noise or vibration.

10.Engine Mounting

A: REMOVAL

1) Change the front hood damper mounting position from (A) to (B), and completely open the front hood.

Tightening torque:
20 N·m (2.0 kgf-m, 14.8 ft-lb)

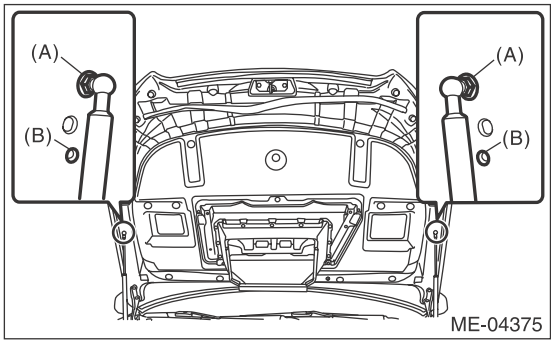

2) Remove the collector cover.
3) Disconnect the ground cable from battery.

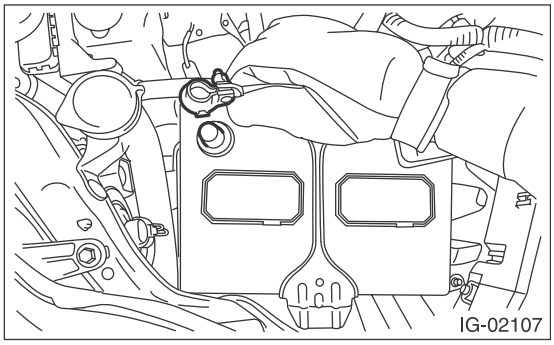

4) Remove the intercooler. <Ref. to IN(H4DOTC)-17, REMOVAL, Intercooler.>
5) Remove the radiator main fan motor assembly and radiator sub fan motor assembly. <Ref. to CO(H4DOTC)-25, REMOVAL, Radiator Main Fan and Fan Motor.> <Ref. to CO(H4DOTC)-27, REMOVAL, Radiator Sub Fan and Fan Motor.>
6) Lift up the vehicle.
7) Remove the under cover. <Ref. to EI-35, REMOVAL, Front Under Cover.>
8) Remove the front exhaust pipe. <Ref. to EX(H4DOTC)-5, REMOVAL, Front Exhaust Pipe.>
9) Lower the vehicle.
10) Support the engine with a lifting device and wire ropes.

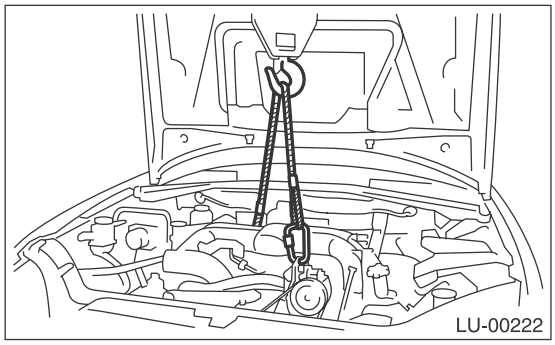

11) Remove the stopper rod.

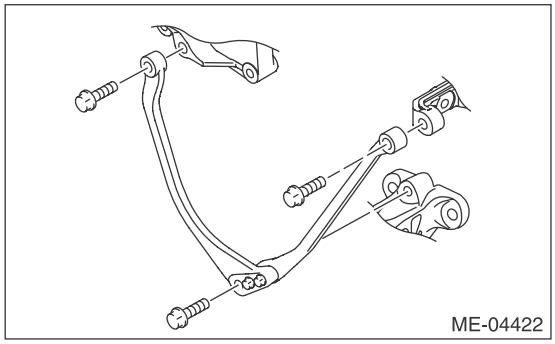

12) Remove the bolt and nut which secure engine mounting to the cradle.

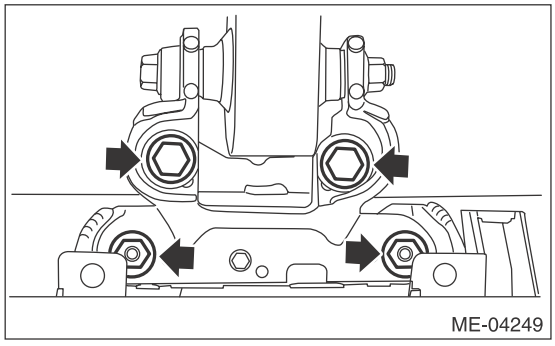

13) Lift up the vehicle.

CAUTION:
When lifting up the vehicle, raise up wire ropes at the same time.

14) Remove the bolts which secure the engine mounting onto the engine, and remove the engine mounting.

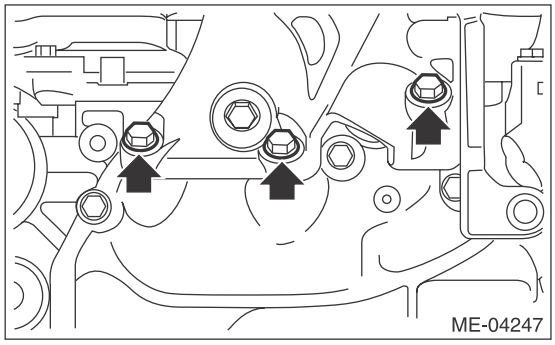

B: INSTALLATION

1) Set the engine mounting, and tighten the bolts which hold engine mounting to the engine.

Tightening torque:
58 N·m (5.9 kgf-m, 42.8 ft-lb)

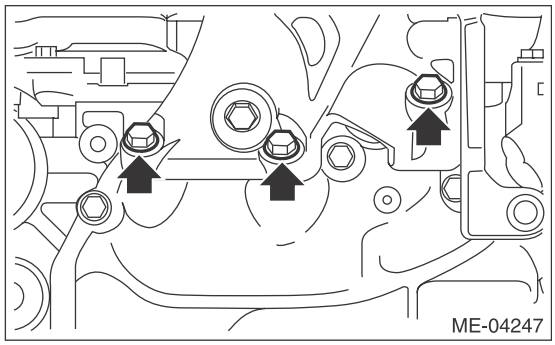

2) Lower the vehicle.

CAUTION:
When lifting down the vehicle, lower wire ropes at the same time.

3) Attach the bolts and nuts which secure engine mounting to the cradle.

Tightening torque:
60 N·m (6.1 kgf-m, 44.3 ft-lb)

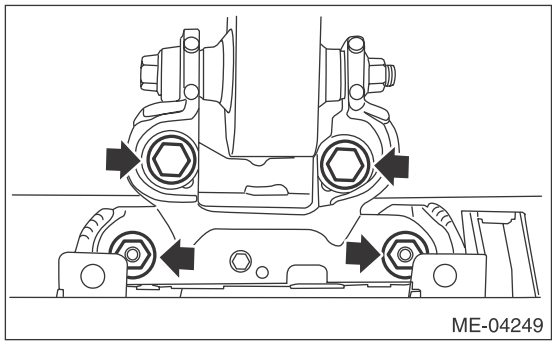

4) Install the stopper rod.

Tightening torque:
36 N·m (3.7 kgf-m, 26.6 ft-lb)

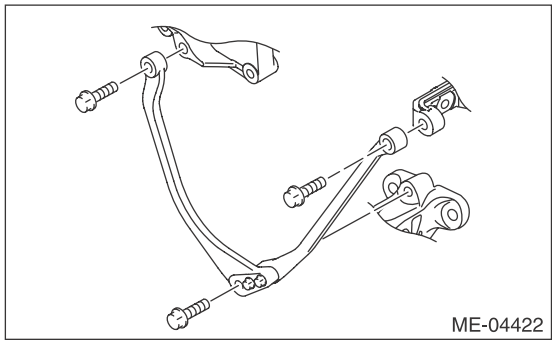

5) Remove the lifting device and wire ropes.

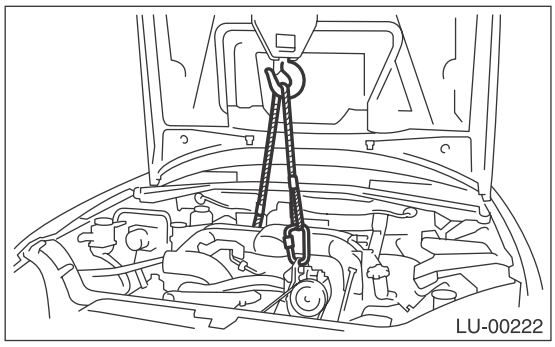

6) Lift up the vehicle.
7) Install the front exhaust pipe. <Ref. to EX(H4DOTC)-7, INSTALLATION, Front Exhaust Pipe.>
8) Install the under cover. <Ref. to EI-35, INSTALLATION, Front Under Cover.>
9) Lower the vehicle.
10) Install the radiator main fan motor assembly and radiator sub fan motor assembly. <Ref. to CO(H4DOTC)-25, INSTALLATION, Radiator Main Fan and Fan Motor.> <Ref. to CO(H4DOTC)-27, INSTALLATION, Radiator Sub Fan and Fan Motor.>
11) Install the intercooler. <Ref. to IN(H4DOTC)-18, INSTALLATION, Intercooler.>
12) Connect the ground cable to battery.

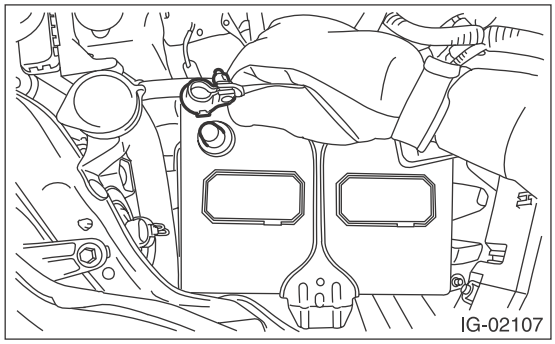

13) Install the collector cover.
14) Change the front hood damper mounting position from (B) to (A), and close the front hood.

Tightening torque:
20 N·m (2.0 kgf-m, 14.8 ft-lb)

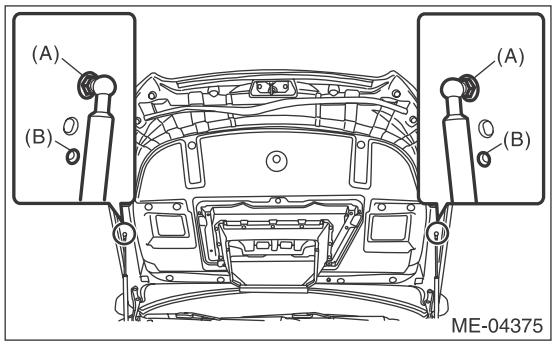

C: DISASSEMBLY

1) Remove the turbocharger upper stay from the engine mounting bracket.

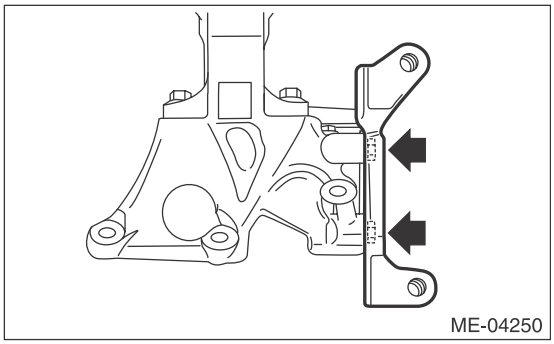

2) Remove the front cushion rubber from the engine mounting bracket.

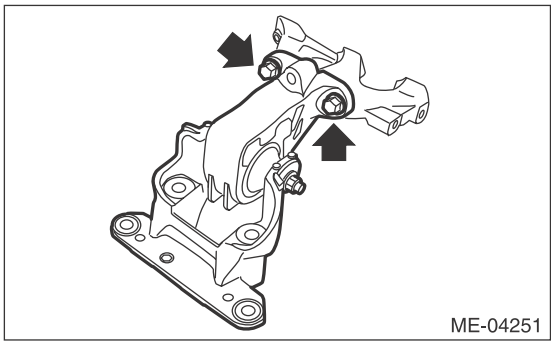

3) Remove the front cushion rubber from the front mounting bracket.

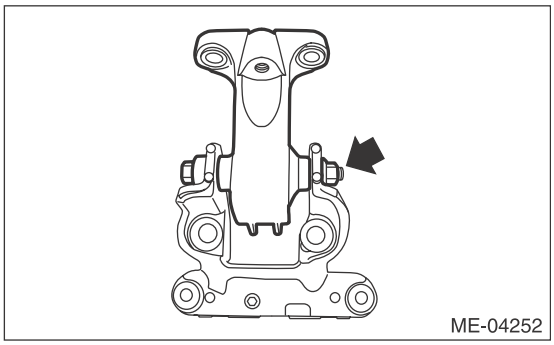

D: ASSEMBLY

1) Install the front cushion rubber to the front mounting bracket.

Tightening torque:
45 N·m (4.6 kgf-m, 33.2 ft-lb)

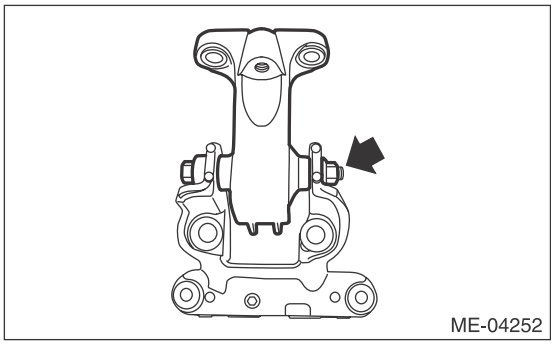

2) Install the front cushion rubber to the engine mounting bracket.

Tightening torque:
25 N·m (2.5 kgf-m, 18.4 ft-lb)

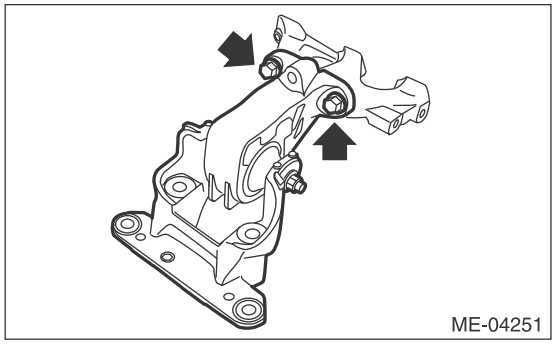

3) Install the turbocharger upper stay to the engine mounting bracket.

Tightening torque:
33 N·m (3.4 kgf-m, 24.3 ft-lb)

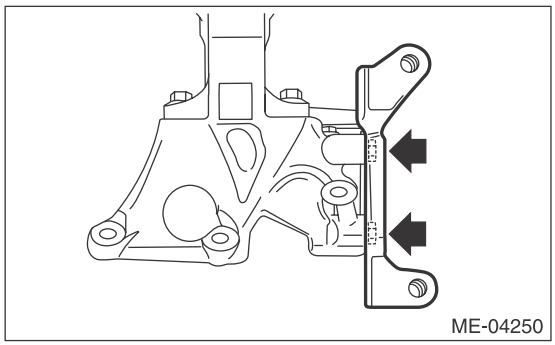

E: INSPECTION

Check that the engine mounting does not have deformation, cracks and any other damage.

11.Preparation for Overhaul

A: PROCEDURE

1) After removing the engine from vehicle body, attach the ST to the engine as shown in the figure.

ST1	498457000	ENGINE STAND ADAPTER RH
ST2	498457100	ENGINE STAND ADAPTER LH
ST3	499817100	ENGINE STAND

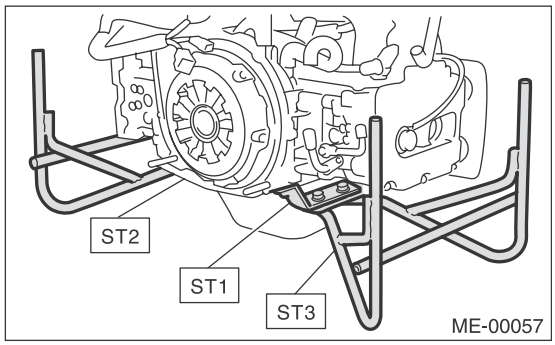

2) In this section the procedures described under each index are all connected and stated in order. Engine overhaul will be completed when you go through all steps in the procedure.
Therefore, in this section, to conduct the particular procedure within the flow of a section, you need to go back and conduct the procedure described previously in order to do that particular procedure.

12.V-belt

A: REMOVAL

NOTE:
When replacing the single part, perform the work with the engine installed to vehicle body.

1. V-BELT

1) Remove the collector cover.
2) Remove the air intake duct. <Ref. to IN(H4DOTC)-12, REMOVAL, Air Intake Duct.>
3) Attach the tool to the V-belt tensioner assembly, and rotate the tool clockwise to loosen and remove the V-belt.

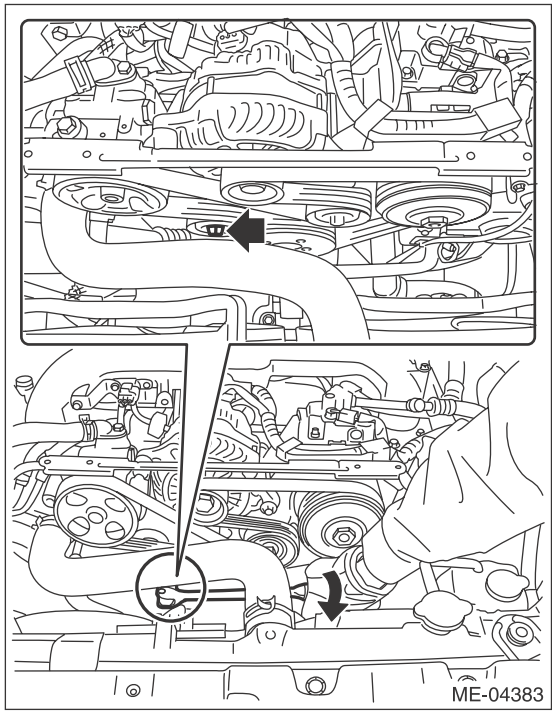

2. V-BELT TENSIONER ASSEMBLY AND IDLER PULLEY

1) Remove the V-belts. <Ref. to ME(H4DOTC)-42, V-BELT, REMOVAL, V-belt.>
2) Remove the bolt securing the V-belt tensioner assembly to the power steering pump bracket, and remove the V-belt tensioner assembly.

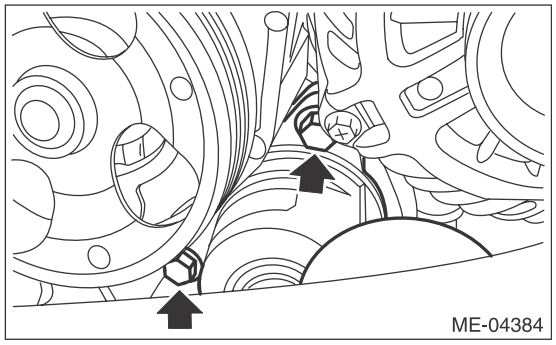

3) Remove the bolt securing the idler pulley to the A/C compressor bracket, and remove the idler pulley.

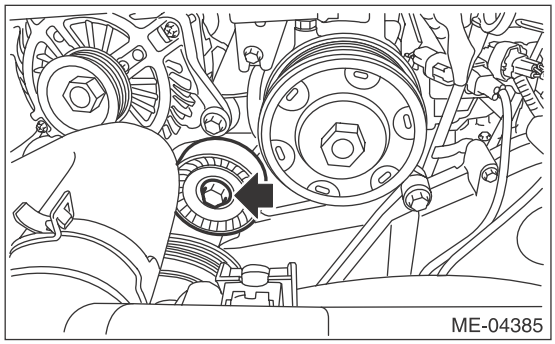

B: INSTALLATION

1. V-BELT

Install in the reverse order of removal.

CAUTION:
• When reusing the V-belt, wipe off dust and water with cloth.
• Do not use the V-belt if there is any oil, grease or coolant on the belt.
• Be careful not to rub the V-belt end surface with bare hands; exposed core may cause injury.
• Wipe off any dust, oil and water on the groove of each pulley with cloth.

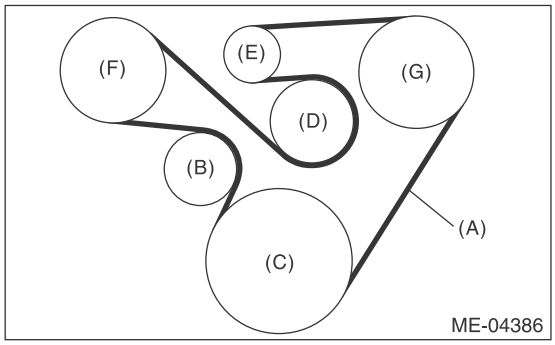

(A) V-belt
(B) V-belt tensioner ASSY
(C) Crank pulley
(D) Idler pulley
(E) Generator pulley
(F) Power steering pump pulley
(G) A/C compressor pulley

2. V-BELT TENSIONER ASSEMBLY AND IDLER PULLEY

Install in the reverse order of removal.

Tightening torque:
33 N·m (3.4 kgf-m, 24.3 ft-lb)

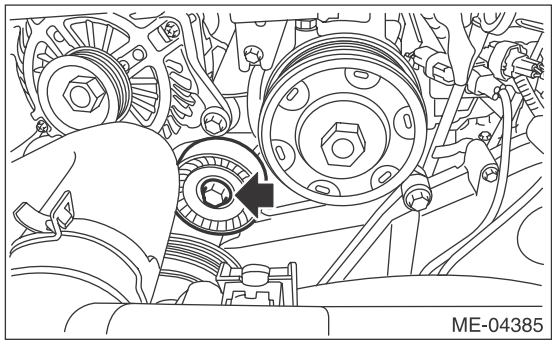

Tightening torque:
20 N·m (2.0 kgf-m, 14.8 ft-lb)

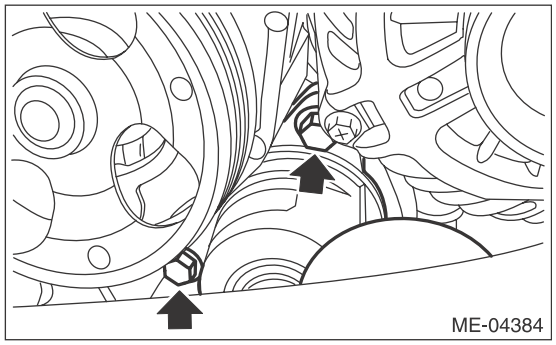

C: INSPECTION

1) Check the V-belt for cracks, tear or wear.
2) Remove the air intake duct. <Ref. to IN(H4DOTC)-12, REMOVAL, Air Intake Duct.>
3) Check that the V-belt tensioner assembly and idler pulley do not have deformation, cracks or other damages.
4) Check the V-belt tension indicator (A) shows within the limit (B).

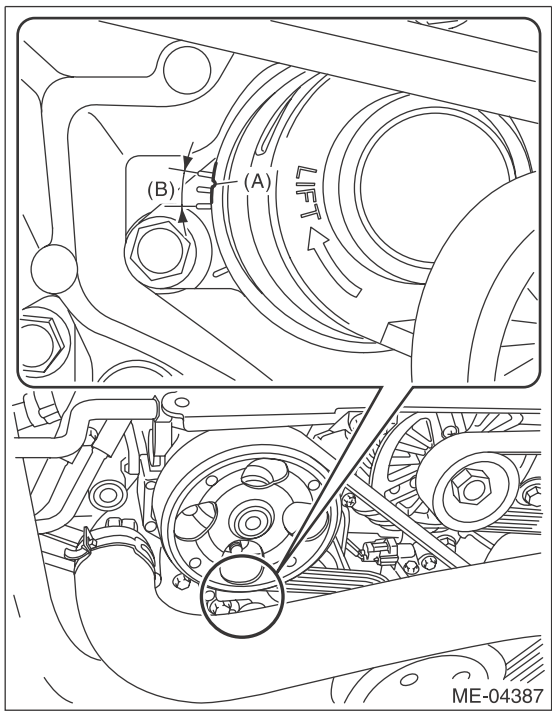

13.Crank Pulley

A: REMOVAL

NOTE:
When replacing the single part, perform the work with the engine installed to vehicle body.
1) Remove the V-belts. <Ref. to ME(H4DOTC)-42, REMOVAL, V-belt.>
2) Use the ST to lock the crank pulley, and remove the crank pulley bolt.
ST 499977100 CRANK PULLEY WRENCH

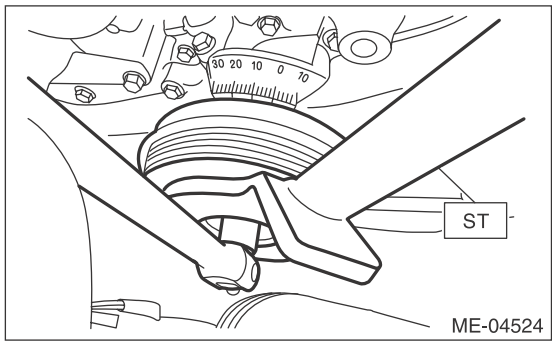

3) Remove the crank pulley.

B: INSTALLATION

1. METHOD WITHOUT ANGLE GAUGE

1) Clean the crankshaft thread using compressed air.
2) Install the crank pulley.
3) Apply engine oil to the crank pulley bolt seat and thread.
4) Tighten the crank pulley bolts.
(1) Use the ST to lock the crank pulley, and temporarily tighten the crank pulley bolt.
ST 499977100 CRANK PULLEY WRENCH

Tightening torque:
47 N·m (4.8 kgf-m, 34.7 ft-lb)

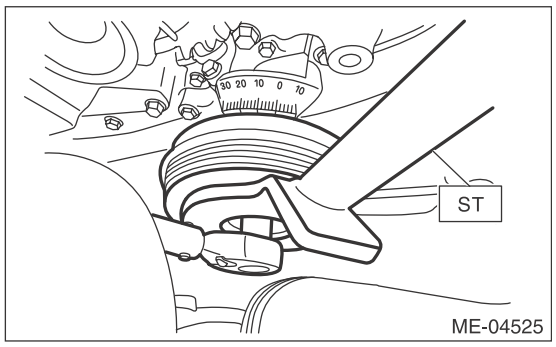

(2) Draw reference lines (A) and (B) using a marker to set the socket to the crank pulley bolt as shown in the figure.
ST 499977100 CRANK PULLEY WRENCH

NOTE:
Set the socket onto the crank pulley bolt so that reference lines (A) and (B) is visible.

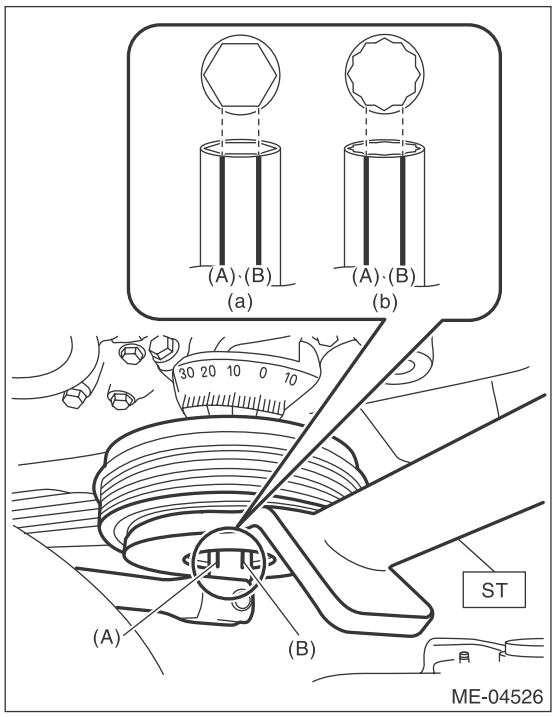

(a) When using 6-point socket
(b) When using 12-point socket

(3) Draw end line (C) on ST using a marker at the same position as reference line (B) was drawn on the socket in step (2).
ST 499977100 CRANK PULLEY WRENCH

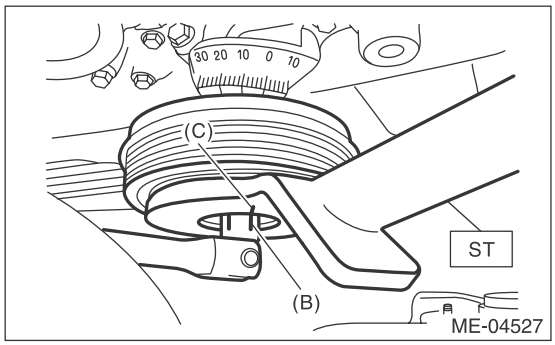

(4) Use the ST to lock the crank pulley, and tighten the crank pulley bolt to the angle where reference line (A) and end line (C) are aligned.
ST 499977100 CRANK PULLEY WRENCH

NOTE:
It should be approx. 60° when reference line (A) and end line (C) are aligned.

Tightening angle:
60°±5°

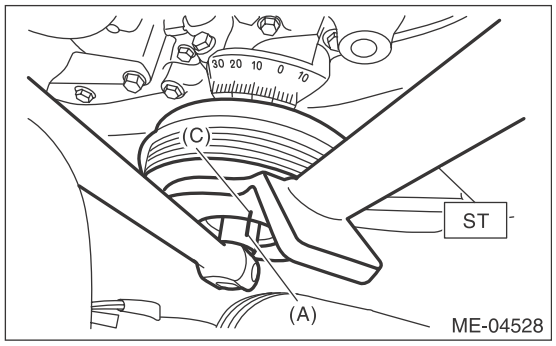

5) Install the V-belts. <Ref. to ME(H4DOTC)-42, INSTALLATION, V-belt.>

2. METHOD WITH ANGLE GAUGE

1) Clean the crankshaft thread using compressed air.
2) Install the crank pulley.
3) Apply engine oil to the crank pulley bolt seat and thread.
4) Tighten the crank pulley bolts.
   (1) Remove the radiator main fan motor assembly and radiator sub motor assembly. <Ref. to CO(H4DOTC)-25, REMOVAL, Radiator Main Fan and Fan Motor.> <Ref. to CO(H4DOTC)-27, REMOVAL, Radiator Sub Fan and Fan Motor.>
   (2) Use the ST1 to lock the crank pulley, and temporarily tighten the crank pulley bolt.

ST1 499977100 CRANK PULLEY WRENCH

Tightening torque:
47 N·m (4.8 kgf-m, 34.7 ft-lb)

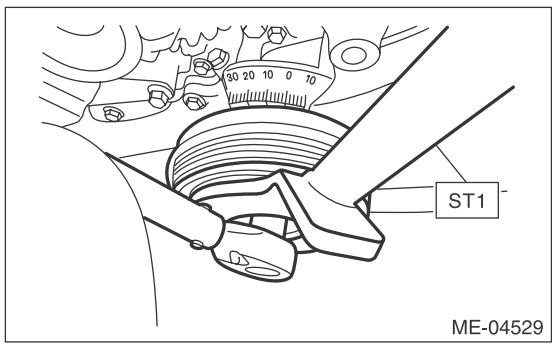

   (3) Set the ST2, use the ST1 to lock the crank pulley, and tighten the crank pulley bolt to the specified angle.

ST1 499977100 CRANK PULLEY WRENCH
ST2 18854AA000 ANGLE GAUGE

NOTE:
Attach the magnet used for securing the ST2 (ANGLE GAUGE) to ST1.

Tightening angle:
60°±5°

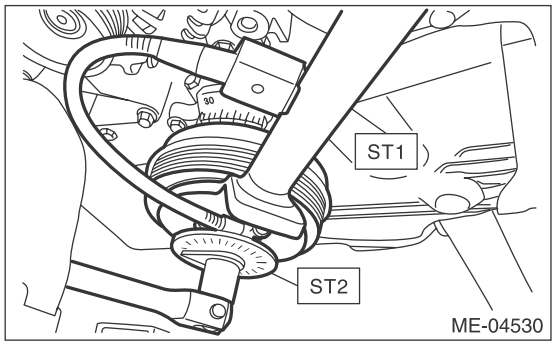

   (4) Install the radiator main fan motor assembly and radiator sub motor assembly. <Ref. to CO(H4DOTC)-25, INSTALLATION, Radiator Main Fan and Fan Motor.> <Ref. to CO(H4DOTC)-27, INSTALLATION, Radiator Sub Fan and Fan Motor.>

5) Install the V-belts. <Ref. to ME(H4DOTC)-42, INSTALLATION, V-belt.>

C: INSPECTION

Check that the crank pulley has no deformation, cracks or other damages.

14.Timing Belt Cover

A: REMOVAL

1. WORK ON THE VEHICLE

1) Remove the collector cover.
2) Disconnect the ground cable from battery.

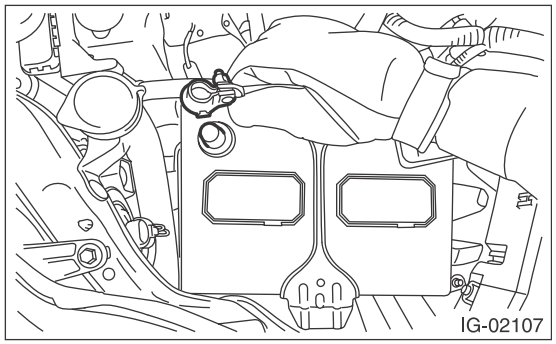

3) When removing the timing belt cover RH
(1) Remove the air intake duct. <Ref. to IN(H4DOTC)-12, REMOVAL, Air Intake Duct.>
(2) Loosen the clamp which holds the intake duct to intercooler.

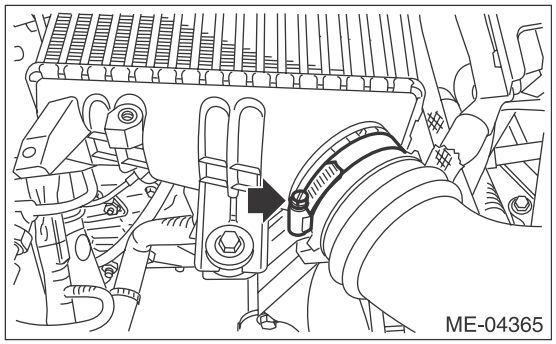

(3) Remove the V-belts. <Ref. to ME(H4DOTC)-42, REMOVAL, V-belt.>
(4) Remove the generator. <Ref. to SC(H4SO)-18, REMOVAL, Generator.>
(5) Remove the suction hose from intake duct.

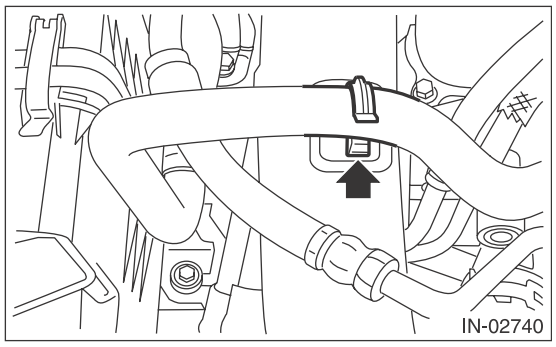

(6) Disconnect the connector (A) from power steering pump, and remove the power steering pump together with the power steering pump bracket from engine and rod stopper.

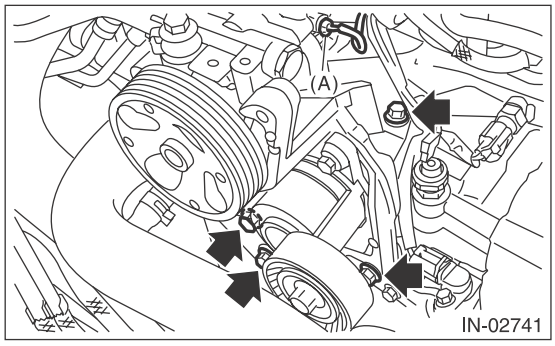

(7) Mount the power steering pump together with the power steering pump bracket on RH side wheel apron.
(8) Remove the radiator sub fan motor assembly. <Ref. to CO(H4DOTC)-27, REMOVAL, Radiator Sub Fan and Fan Motor.>
(9) Remove the engine coolant hose from the clip (A).
(10) Remove the bolts which secure the intake duct to the turbocharger, and remove the air bypass valve from the intake duct.

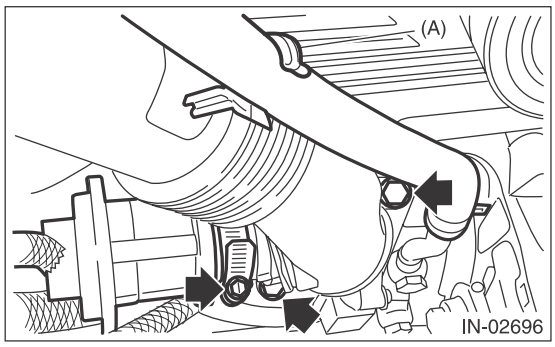

(11) Remove the intake duct from intake manifold.

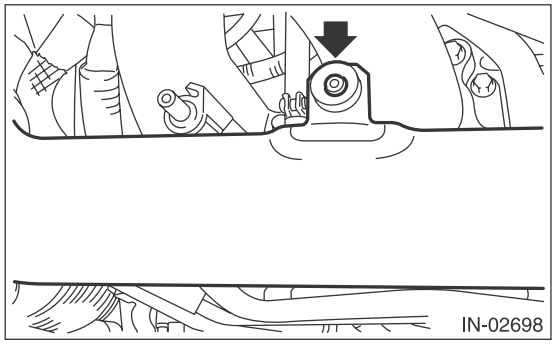

(12) Disconnect the vacuum hose from blow-by pipe, and remove the bolt securing the blow-by pipe from the intake manifold protector RH.

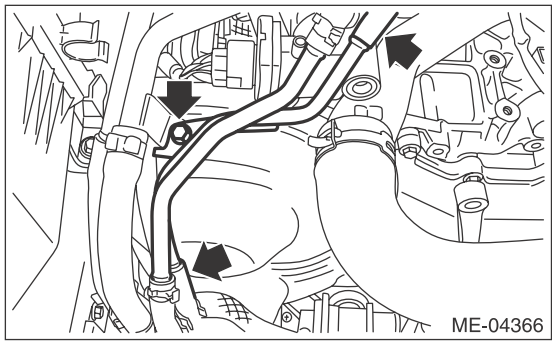

(13) Disconnect the vacuum hose from PCV pipe.

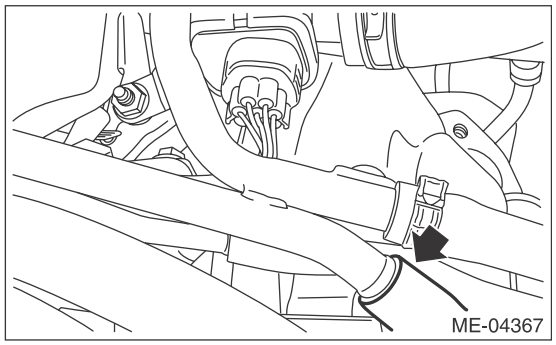

(14) Remove the vacuum hose (A), vacuum hose (B), vacuum hose (C) and vacuum hose (D) from the clip (E).

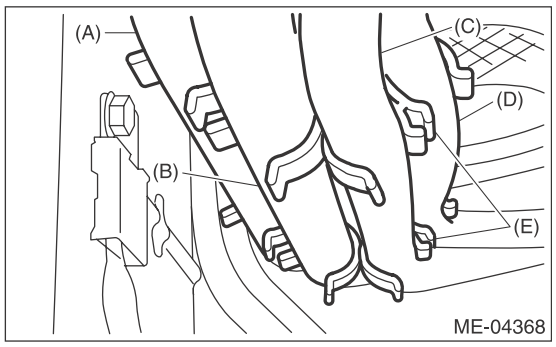

(15) Remove the bolts which secure the upper side of the timing belt cover RH.
(16) Lift up the vehicle.
(17) Remove the under cover. <Ref. to EI-35, REMOVAL, Front Under Cover.>
(18) Remove the air by-pass valve. <Ref. to IN(H4DOTC)-25, REMOVAL, Air By-pass Valve.>
(19) Remove the clip holding the engine harness.

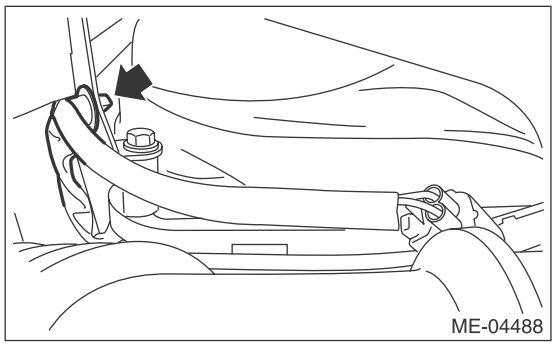

(20) Loosen the remaining bolts which secure timing belt cover RH, and remove the timing belt cover RH together with the hose clip stay assembly.

4) When removing the timing belt cover LH
(1) Disconnect the connectors from front oxygen (A/F) sensor and rear oxygen sensor, and remove the clip (A) securing the front oxygen (A/F) sensor harness and rear oxygen sensor harness.

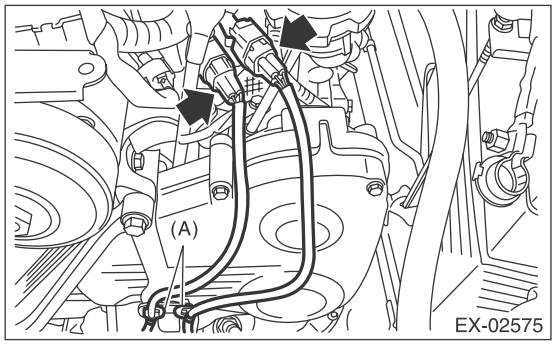

(2) Remove the bolts which secure the upper side of the timing belt cover LH.
(3) Lift up the vehicle.
(4) Remove the under cover. <Ref. to EI-35, REMOVAL, Front Under Cover.>
(5) Loosen the remaining bolts which secure timing belt cover LH, and remove the timing belt cover LH together with the oxygen sensor bracket.

5) When removing the front timing belt cover
(1) Remove the stopper rod.

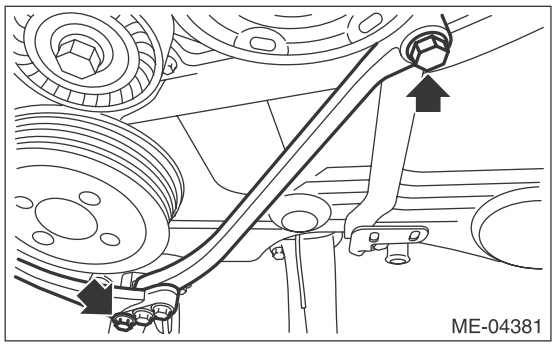

(2) Remove the crank pulley. <Ref. to ME(H4DOTC)-44, REMOVAL, Crank Pulley.>
(3) Remove the timing belt cover RH and timing belt cover LH. Refer to step 3) and step 4) for removal procedures.
(4) Remove the bolts securing the front timing belt cover, and remove the front timing belt cover.

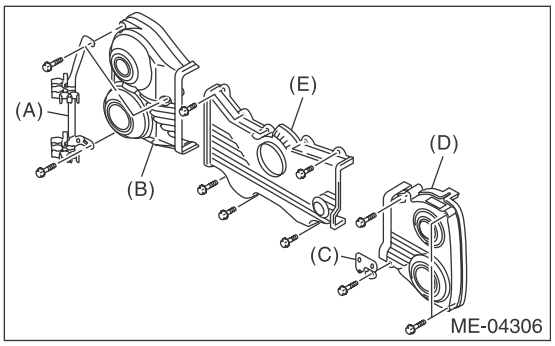

(A) Hose clip stay ASSY
(B) Timing belt cover RH
(C) Oxygen sensor bracket
(D) Timing belt cover LH
(E) Front timing belt cover

2. WORK ON THE ENGINE UNIT ONLY

1) Remove the crank pulley. <Ref. to ME(H4DOTC)-44, REMOVAL, Crank Pulley.>
2) Remove the blow-by pipe from the intake manifold protector RH.

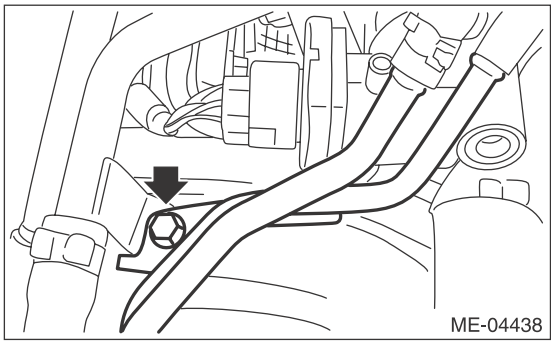

3) Remove the vacuum hose (A), vacuum hose (B), vacuum hose (C) and vacuum hose (D) from the clip (E).

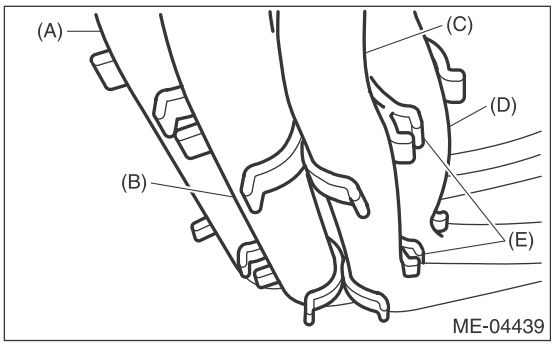

4) Remove the clip which holds the engine harness to the hose clip stay assembly.

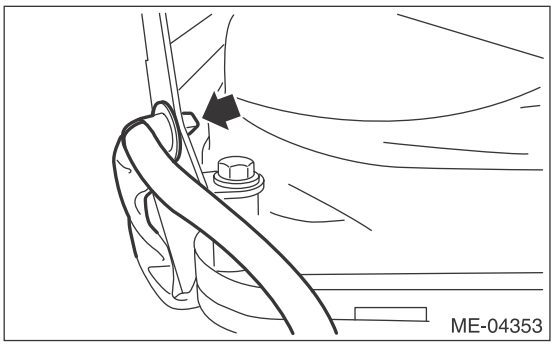

5) Remove timing belt cover RH (B) together with the hose clip stay assembly (A).
6) Remove timing belt cover (LH) (D) together with the oxygen (A/F) sensor bracket (C).
7) Remove front timing belt cover (E).

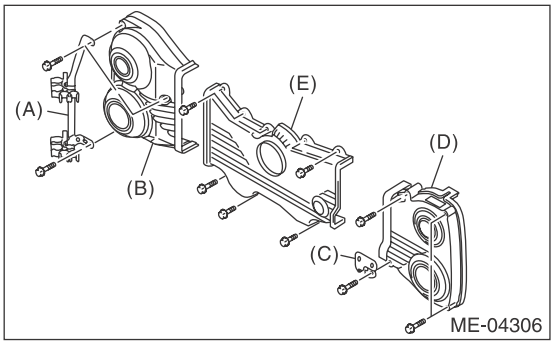

B: INSTALLATION

1. WORK ON THE VEHICLE

Install in the reverse order of removal.

NOTE:
Install the vacuum hose as shown in the figure.

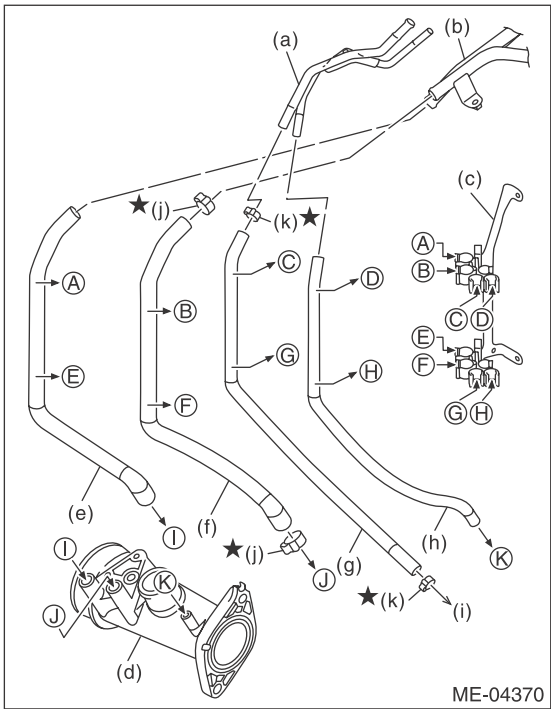

(a) Blow-by pipe
(b) PCV pipe
(c) Hose clip stay ASSY
(d) Intake duct
(e) Vacuum hose (A)
(f) Vacuum hose (B)
(g) Vacuum hose (C)
(h) Vacuum hose (D)
(i) To Oil catch tank
(j) Clamp
(k) Clamp

Tightening torque:
5 N·m (0.5 kgf-m, 3.7 ft-lb)

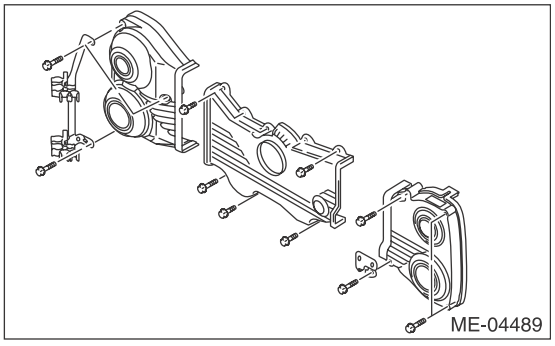

Tightening torque:
6.4 N·m (0.7 kgf-m, 4.7 ft-lb)

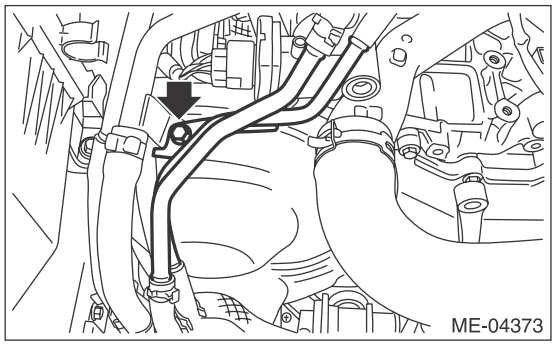

Tightening torque:
T1: 3 N·m (0.3 kgf-m, 2.2 ft-lb)
T2: 16 N·m (1.6 kgf-m, 11.8 ft-lb)

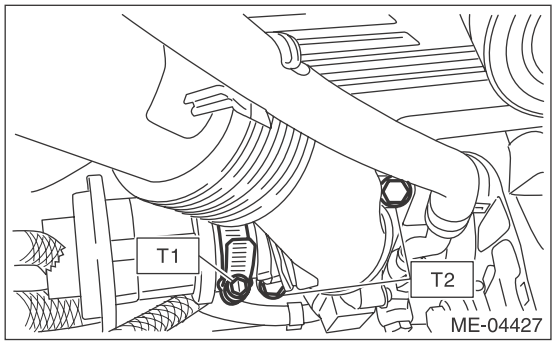

Tightening torque:
Refer to "COMPONENT" of "STARTING/ CHARGING SYSTEMS" for the tightening torque. <Ref. to SC(H4SO)-5, GENERATOR, COMPONENT, General Description.>

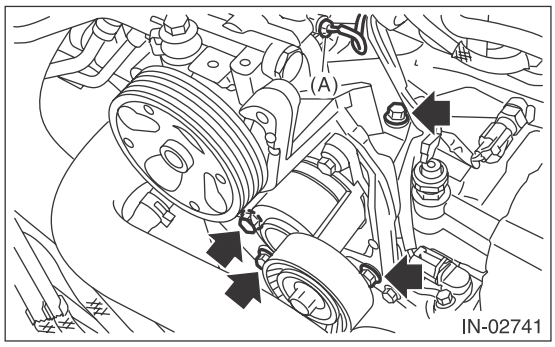

Tightening torque:
3 N·m (0.3 kgf-m, 2.2 ft-lb)

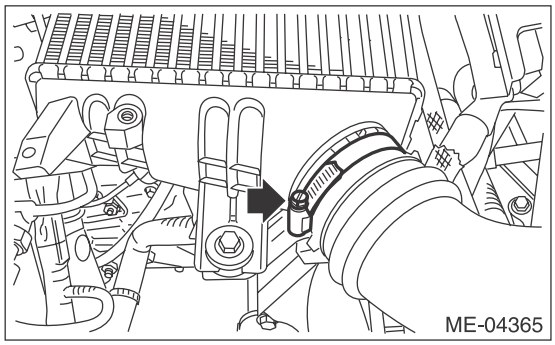

Tightening torque:
36 N·m (3.7 kgf-m, 26.6 ft-lb)

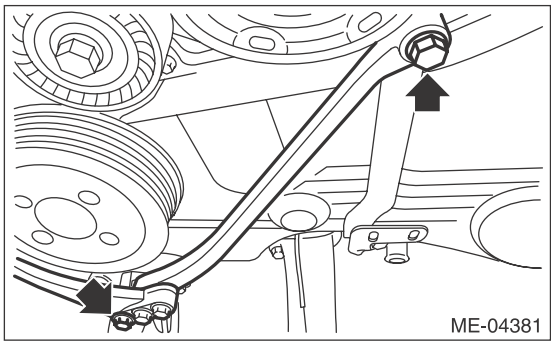

2. WORK ON THE ENGINE UNIT ONLY

Install in the reverse order of removal.

NOTE:
Install the vacuum hose as shown in the figure.

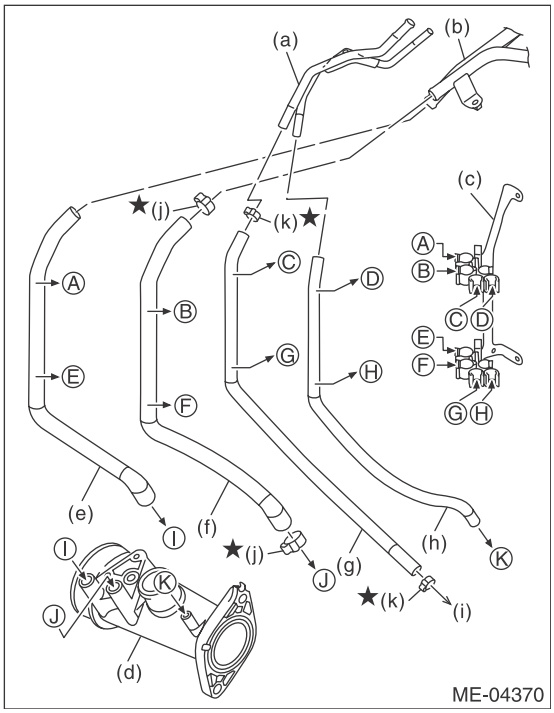

(a) Blow-by pipe
(b) PCV pipe
(c) Hose clip stay ASSY
(d) Intake duct
(e) Vacuum hose (A)
(f) Vacuum hose (B)
(g) Vacuum hose (C)
(h) Vacuum hose (D)
(i) To Oil catch tank
(j) Clamp
(k) Clamp

Tightening torque:
5 N·m (0.5 kgf-m, 3.7 ft-lb)

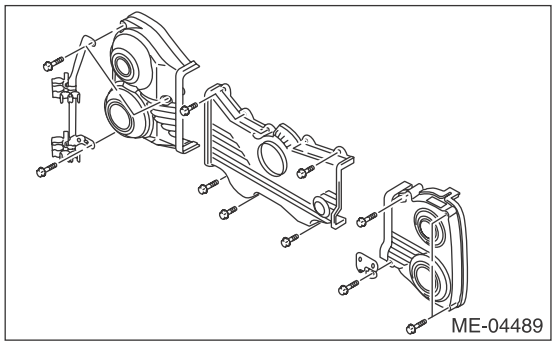

Tightening torque:
6.4 N·m (0.7 kgf-m, 4.7 ft-lb)

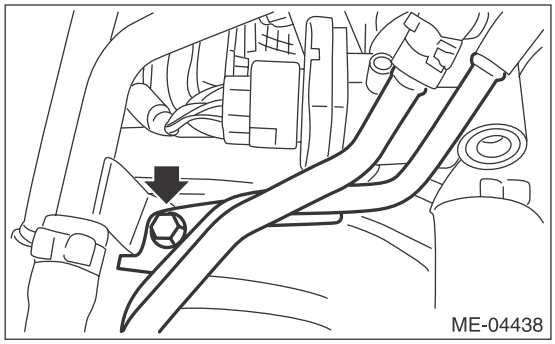

C: INSPECTION

Check that the timing belt cover does not have deformation, cracks and any other damage.

15. Timing Belt

A: REMOVAL

NOTE:
• When replacing the single part, perform the work with the engine installed to vehicle body.
• When performing the work with the engine installed to body, the following parts must also be removed/installed.
  • Radiator main fan motor assembly <Ref. to CO(H4DOTC)-25, REMOVAL, Radiator Main Fan and Fan Motor.> <Ref. to CO(H4DOTC)-25, INSTALLATION, Radiator Main Fan and Fan Motor.>
  • Radiator sub fan motor assembly <Ref. to CO(H4DOTC)-27, REMOVAL, Radiator Sub Fan and Fan Motor.> <Ref. to CO(H4DOTC)-27, INSTALLATION, Radiator Sub Fan and Fan Motor.>
• When performing the work with the engine installed to body, protect the radiator with cardboards or blankets.

1. TIMING BELT

1) Remove the crank pulley. <Ref. to ME(H4DOTC)-44, REMOVAL, Crank Pulley.>
2) Remove the timing belt cover. <Ref. to ME(H4DOTC)-46, REMOVAL, Timing Belt Cover.>
3) Remove the timing belt guide.

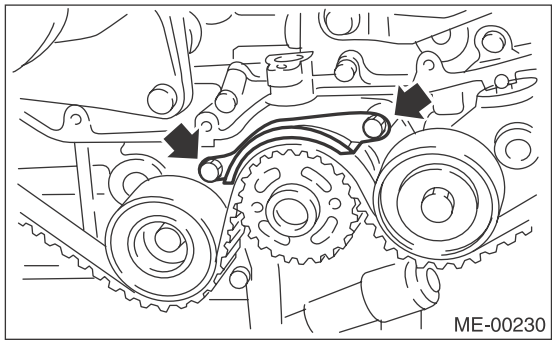
ME-00230

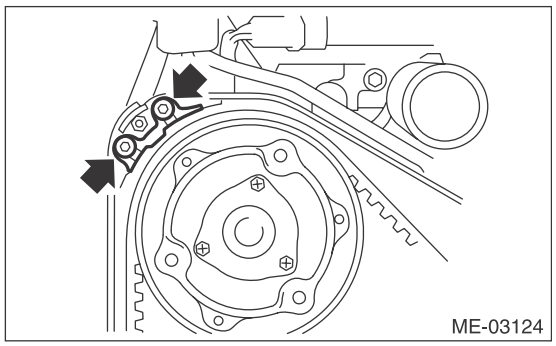
ME-03124

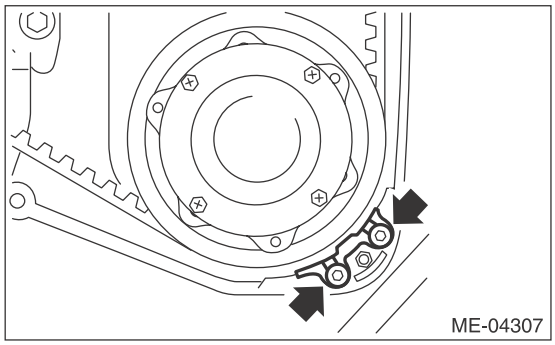
ME-04307

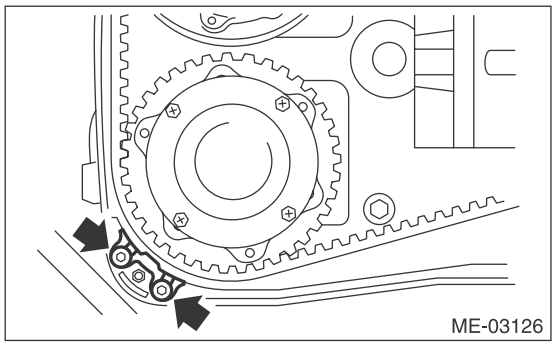
ME-03126

4) If the alignment mark or arrow mark (which indicates the direction of rotation) on timing belt fade away, put new marks before removing the timing belt as shown in procedures below.
  (1) Turn the crankshaft using ST, and align the alignment marks on crank sprocket, intake cam sprocket LH, exhaust cam sprocket LH, intake cam sprocket RH and exhaust cam sprocket RH with marks on oil pump and notches of timing belt cover.

ST 499987500 CRANKSHAFT SOCKET

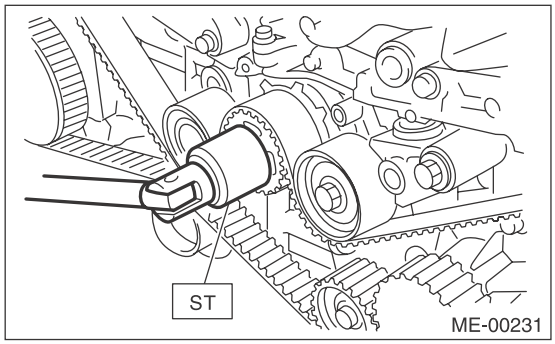

ME-00231

(2) Using white paint, put an alignment mark or an arrow mark on timing belts in relation to the crank sprocket and cam sprockets.

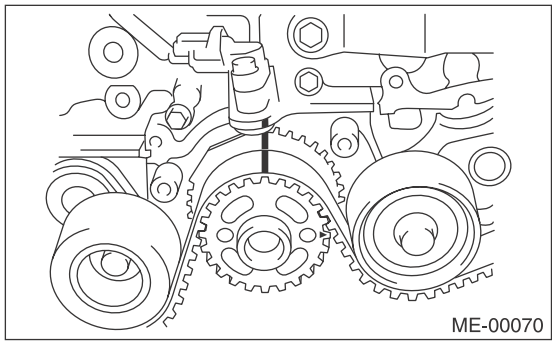
ME-00070

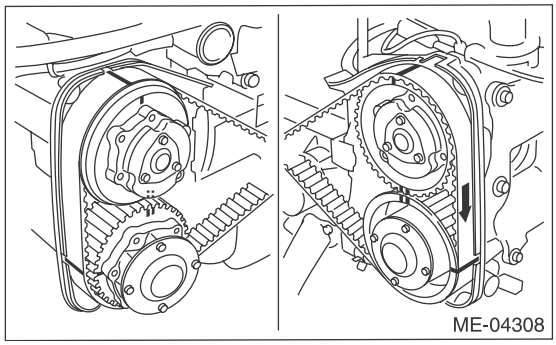
ME-04308

Z_1: 54.5 teeth
Z_2: 51 teeth
Z_3: 28 teeth

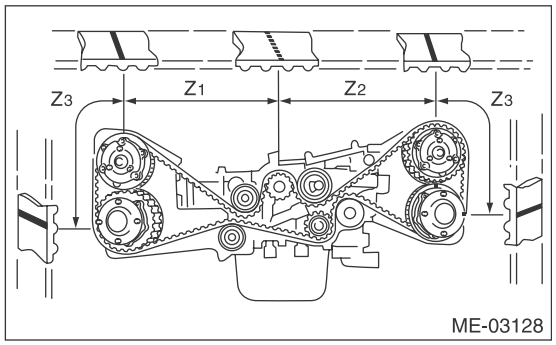

ME-03128

5) Remove the belt idler (A).

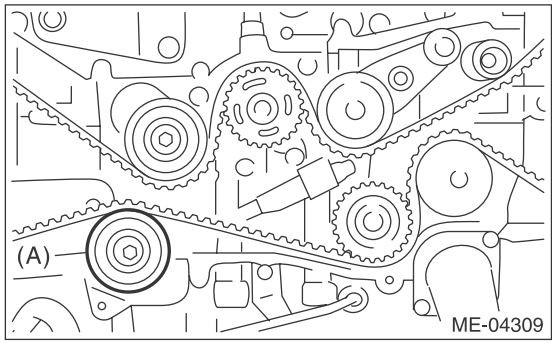

ME-04309

6) Remove the timing belt.

CAUTION:
After the timing belt has been removed, never rotate the intake and exhaust cam sprocket. If the cam sprocket is rotated, the intake and exhaust valve heads strike together and valve stems are bent.

2. AUTOMATIC BELT TENSION ADJUSTER ASSEMBLY AND BELT IDLER

1) Remove the belt idler (A) and (B).

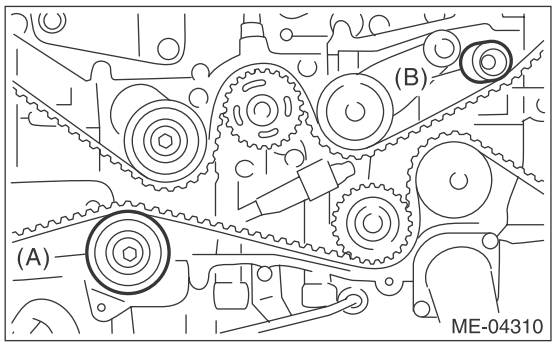

ME-04310

2) Remove the belt idler No. 2.

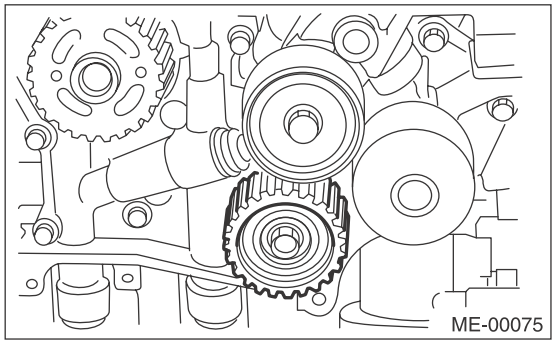
ME-00075

3) Remove the automatic belt tension adjuster assembly.

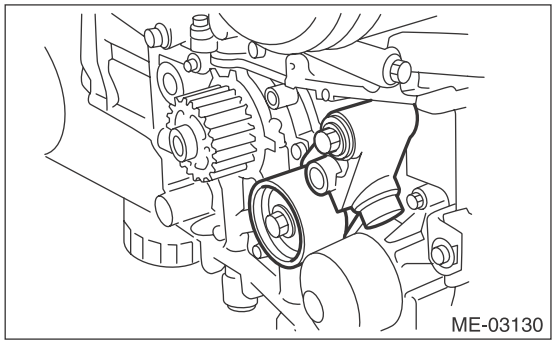
ME-03130

B: INSTALLATION

1. AUTOMATIC BELT TENSION ADJUSTER ASSEMBLY AND BELT IDLER

1) Prepare for installation of the automatic belt tension adjuster assembly.

CAUTION:
• Always use a vertical type pressing tool to move the adjuster rod down.
• Do not use a lateral type vise.
• Push the adjuster rod vertically.
• Press-in the push adjuster rod gradually taking three minutes or more.
• Do not allow press pressure to exceed 9,807 N (1,000 kgf, 2,205 lbf).
• Push in the adjuster rod to the end face of the cylinder. However, do not press the adjuster rod below the end face of the cylinder. Doing so may damage the cylinder.
• Do not release the press pressure until stopper pin is completely inserted.

(1) Attach the automatic belt tension adjuster assembly to vertical pressing tool.
(2) Slowly push in the adjuster rod with a pressure of 165 N (16.8 kgf, 37.1 lbf) or more until the adjuster rod is aligned with the stopper pin hole in the cylinder.

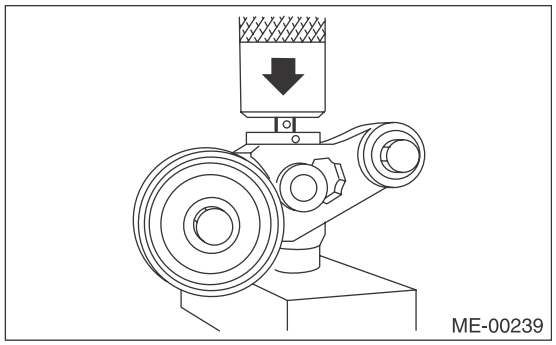
ME-00239

(3) With a 2 mm (0.08 in) dia. stopper pin or a 2 mm (0.08 in) (nominal) dia. hex wrench inserted into the stopper pin hole in cylinder, secure the adjuster rod.

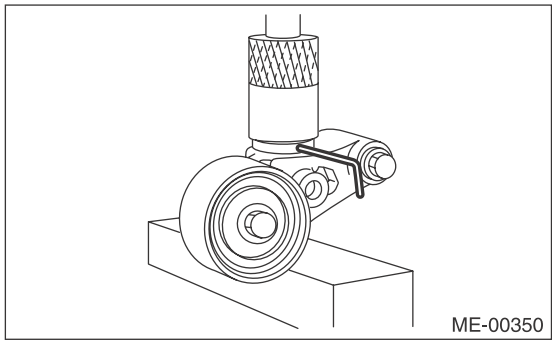
ME-00350

2) Install the automatic belt tension adjuster assembly.

Tightening torque:
39 N·m (4.0 kgf-m, 28.8 ft-lb)

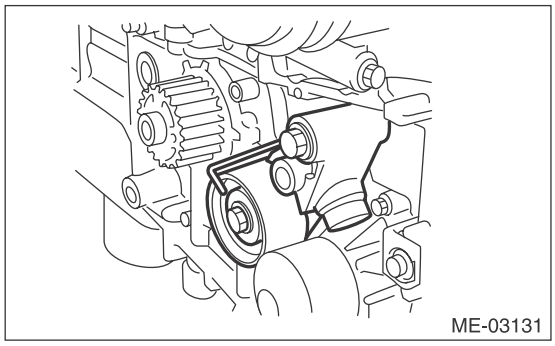
ME-03131

3) Install the belt idler No. 2.

Tightening torque:
39 N·m (4.0 kgf-m, 28.8 ft-lb)

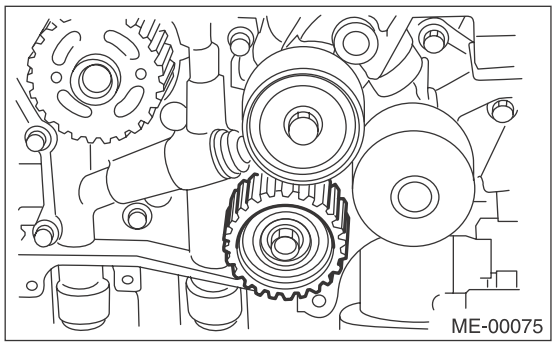
ME-00075

4) Install the belt idlers.

Tightening torque:
39 N·m (4.0 kgf-m, 28.8 ft-lb)

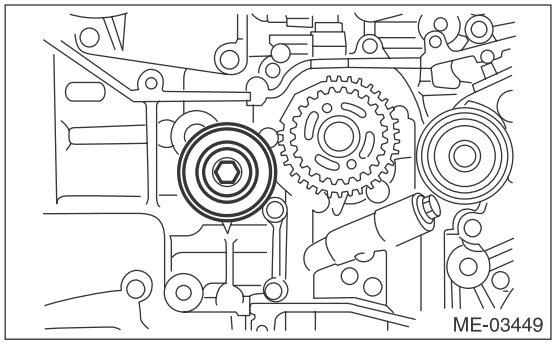
ME-03449

Tightening torque:
25 N·m (2.5 kgf-m, 18.4 ft-lb)

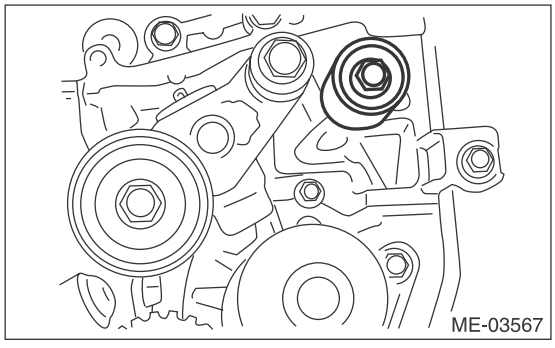
ME-03567

2. TIMING BELT

1) Prepare for installation of the automatic belt tension adjuster assembly. <Ref. to ME(H4DOTC)-53, AUTOMATIC BELT TENSION ADJUSTER ASSEMBLY AND BELT IDLER, INSTALLATION, Timing Belt.>

2) Align the mark (B) on crank sprocket with the mark (A) on oil pump.

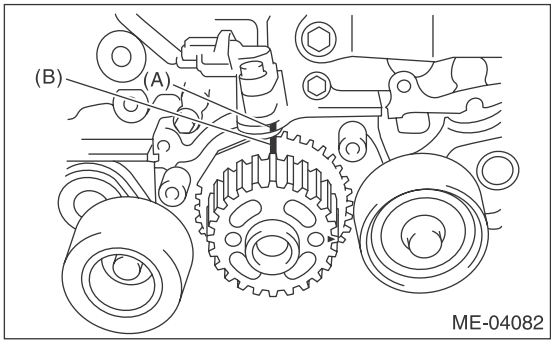

3) Align the single line (B) on the exhaust cam sprocket RH with notch (A) of timing belt cover.

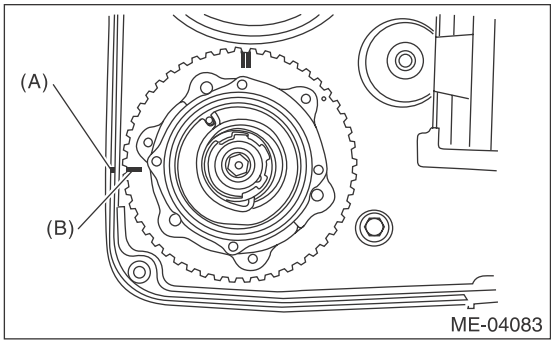

4) Align the single line (B) on the intake cam sprocket RH with notch (A) of timing belt cover. Make sure that the double line marks (C) on intake and exhaust cam sprockets are aligned.

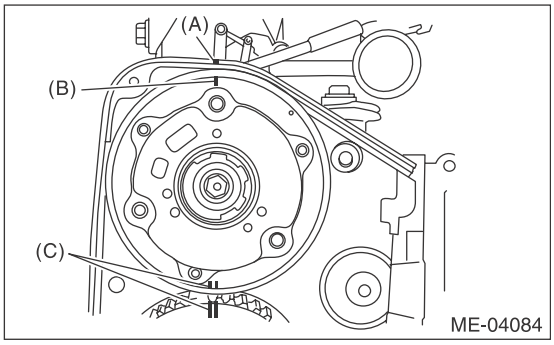

5) Align the single line mark (B) on exhaust cam sprocket LH with notch (A) on the timing belt cover by turning the sprocket counterclockwise (as viewed from front of engine).

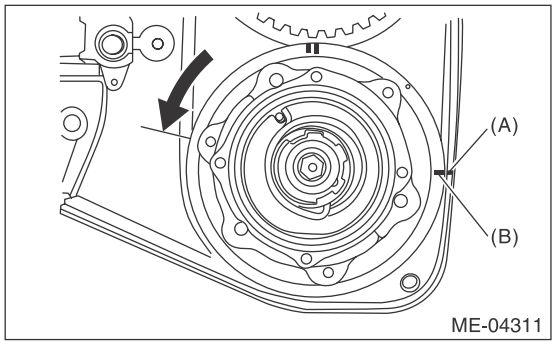

6) Align the single line mark (B) on intake cam sprocket LH with notch (A) on the timing belt cover by turning the sprocket clockwise (as viewed from front of engine). Make sure the double line marks (C) on the intake and exhaust cam sprockets are aligned.

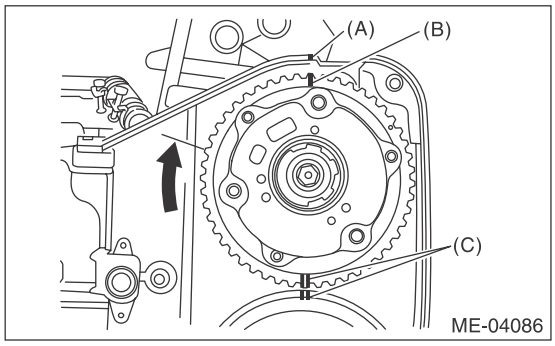

7) Make sure that the cam and crank sprockets are positioned properly.

CAUTION:
• Intake and exhaust camshafts for this DOHC engine can be independently rotated with the timing belts removed. As can be seen from the figure, if the intake and exhaust valves are lifted simultaneously, heads will interfere with each other, resulting in bent valves.

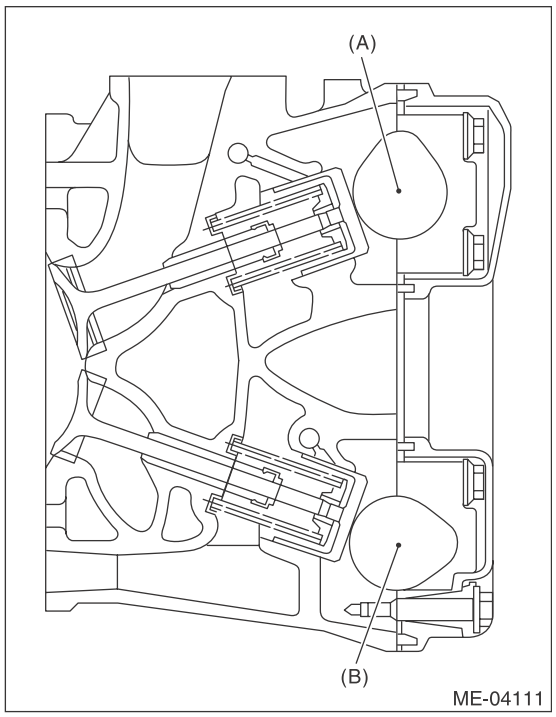

(A) Intake camshaft
(B) Exhaust camshaft

• When the timing belts are not installed, four camshafts are held at the "zero-lift" position, where all cams on camshafts are not pushing down on the intake and exhaust valves. (Under this condition, all valves remain unlifted.)
• When the camshafts are rotated to install the timing belts, #2 intake and #4 exhaust cam of camshaft LH are held, pushing their corresponding valves down. (Under this condition, these valves are held lifted.) Camshaft RH are held so that their cams do not push the valves down.
• Camshafts LH must be rotated from the zero-lift position to the position where the timing belt is to be installed with the smallest possible angle, in order to prevent mutual interference of intake and exhaust valve heads.

• Do not allow the camshafts to rotate in the direction shown in the upper figure. Doing this may cause both the intake and exhaust valves to lift simultaneously, resulting in mutual interference of valve heads.

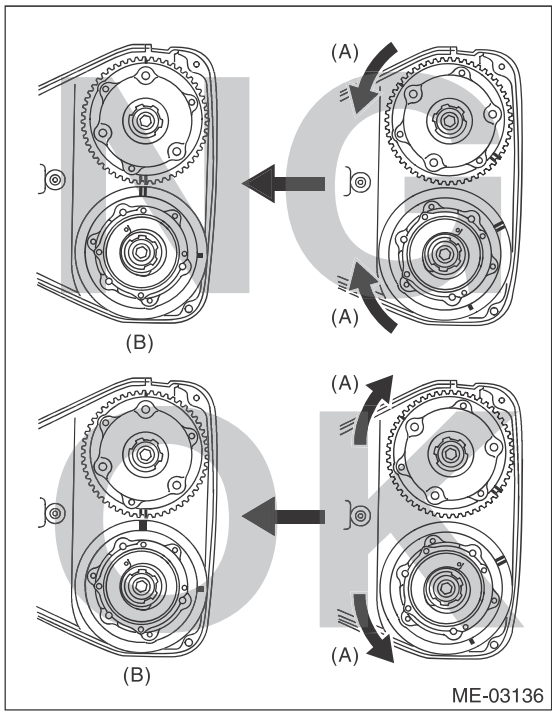

(A) Direction of rotation
(B) Timing belt installation position

8) Align the alignment mark on the timing belt with marks on the sprockets in the alphabetical order shown in the figure. While aligning marks, position the timing belt properly, and install the timing belt.

CAUTION:
- **If the timing belt slips by 1 or more teeth, the valve and piston may hit each other.**
- **Make sure that the direction of belt rotation is correct.**

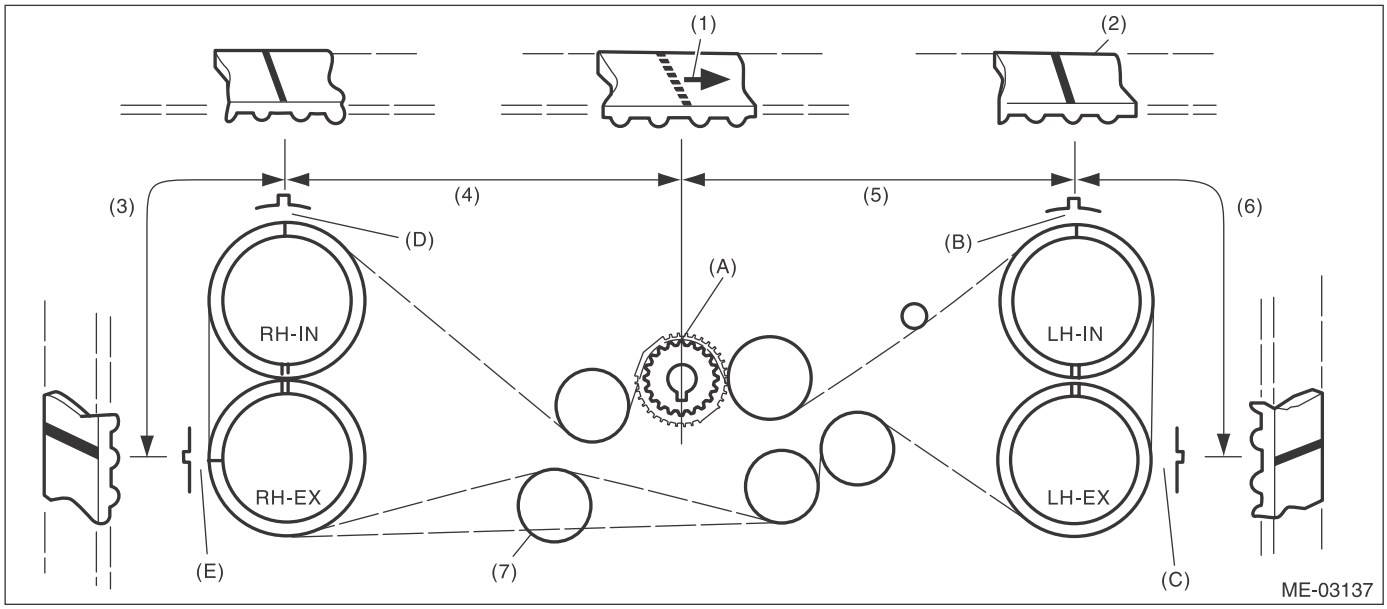

(1) Arrow mark
(2) Timing belt
(3) 28 teeth
(4) 54.5 teeth
(5) 51 teeth
(6) 28 teeth
(7) Install it in the end

9) Install the belt idlers.

Tightening torque:
39 N·m (4.0 kgf-m, 28.8 ft-lb)

NOTE:
Make sure that the marks on the timing belt and sprockets are aligned.

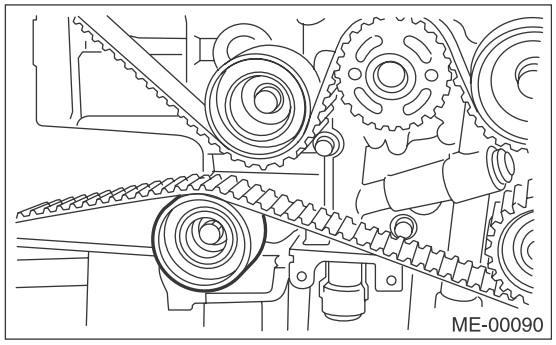

10) After ensuring that the marks on the timing belt and sprockets are aligned, remove the stopper pin from tensioner adjuster.

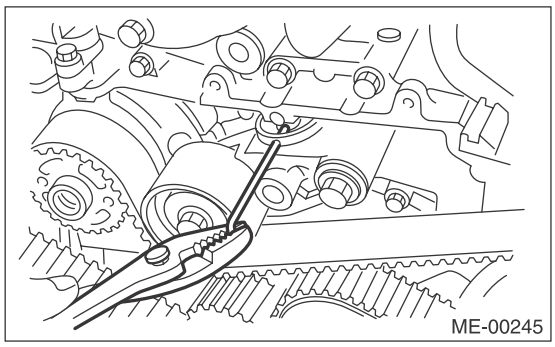

11) Install the timing belt guide.
(1) Temporarily tighten the bolts mounting the timing belt guide.

NOTE:
- Before installing the timing belt guide, clean the timing belt guide mounting bolt holes of the timing belt cover No. 2.
- Apply liquid gasket to the thread of the timing belt guide mounting bolt on the cam sprocket section. (when reusing bolts)

Liquid gasket:
THREE BOND 1324 (Part No. 004403042) or equivalent

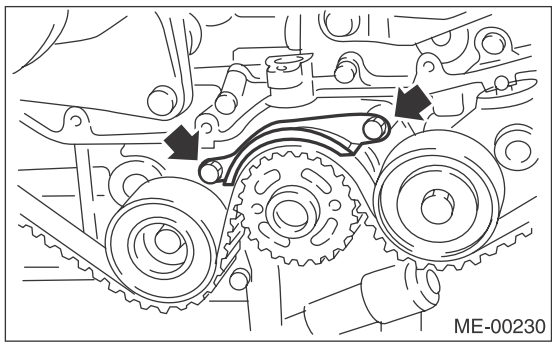

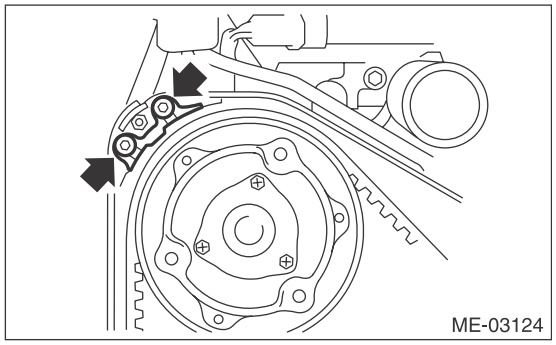

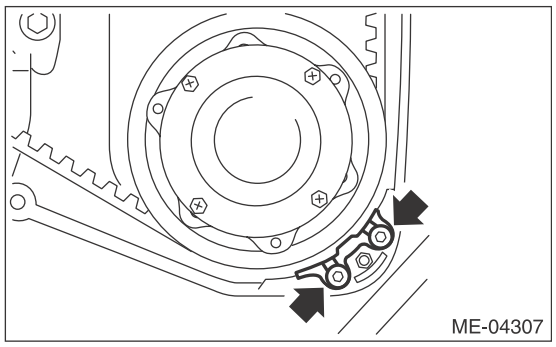

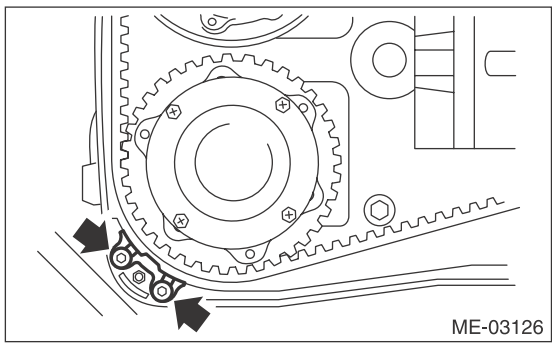

(2) Adjust the clearance between timing belt and timing belt guide using a thickness gauge and tighten.

Clearance:
1.0±0.5 mm (0.039±0.020 in)

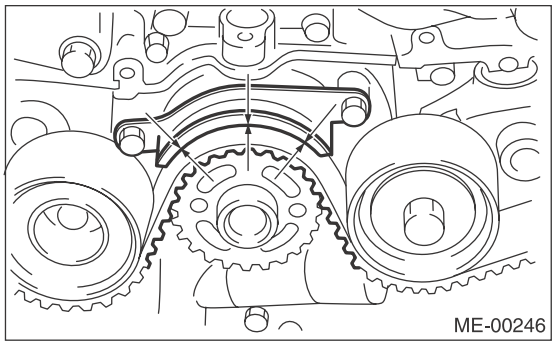

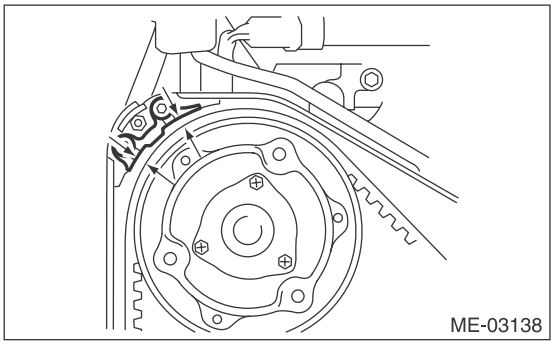

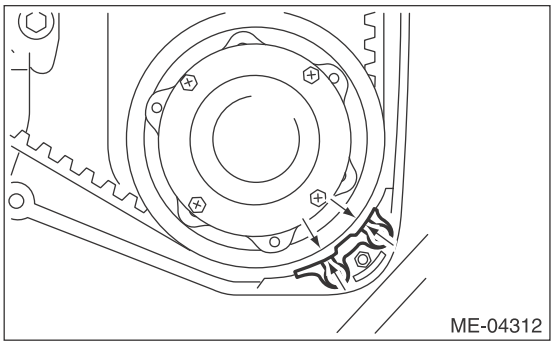

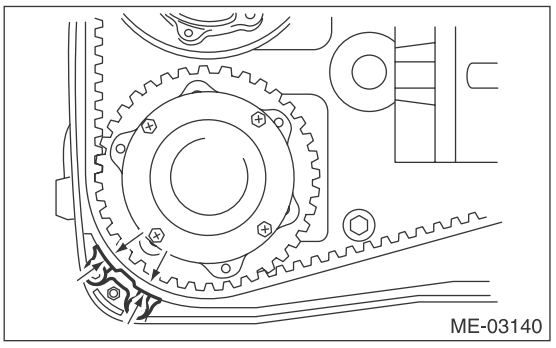

Tightening torque:
9.75 N·m (1.0 kgf-m, 7.2 ft-lb)

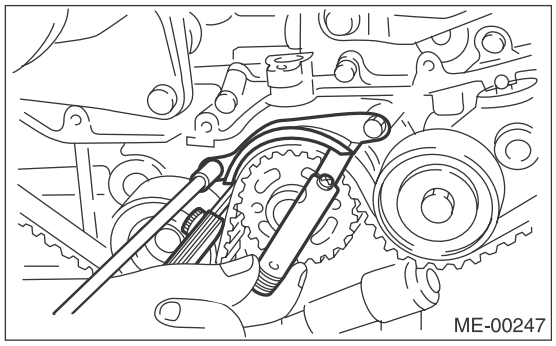

Tightening torque:
6.4 N·m (0.7 kgf-m, 4.7 ft-lb)

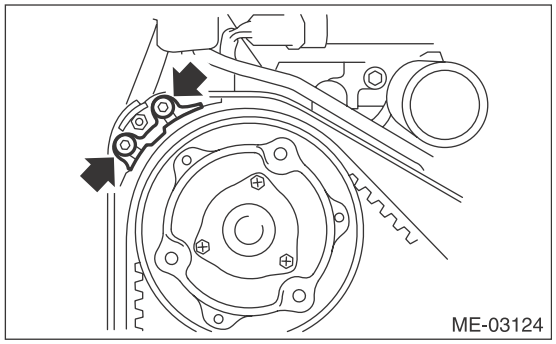

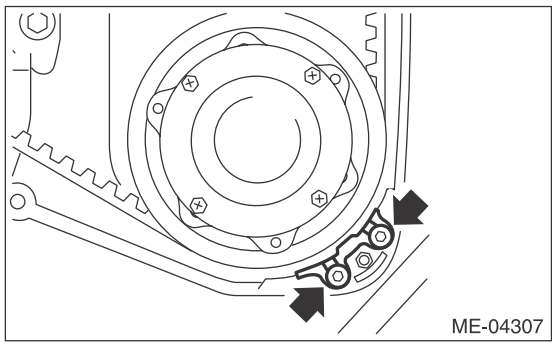

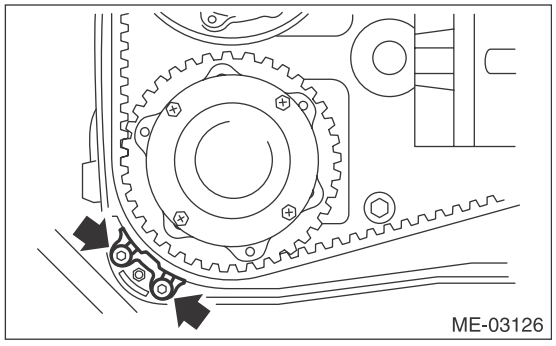

12) Install the timing belt cover. <Ref. to ME(H4DOTC)-49, INSTALLATION, Timing Belt Cover.>
13) Install the crank pulley. <Ref. to ME(H4DOTC)-44, INSTALLATION, Crank Pulley.>

C: INSPECTION

1. TIMING BELT

1) Check the timing belt teeth for breaks, cracks or wear. If any fault is found, replace the timing belt.
2) Check the condition on the back surface of the timing belt. If cracks are found, replace the timing belt.

CAUTION:
• Be careful not to let oil, grease or coolant contact the timing belt. Remove quickly and thoroughly if this happens.
• Do not bend the timing belt sharply.

In radial diameter h:
60 mm (2.36 in) or more

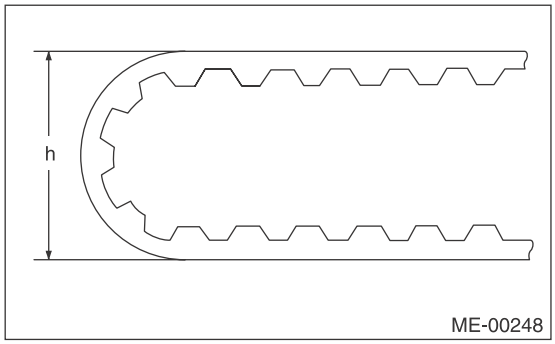

2. AUTOMATIC BELT TENSION ADJUSTER

1) Visually check the oil seals for leaks, and rod ends for abnormal wear and scratches. If necessary, replace the automatic belt tension adjuster assembly.

NOTE:
Slight traces of oil on the oil seal of the rod does not indicate a problem.
2) Check that the adjuster rod does not move when a pressure of 165 N (16.8 kgf, 37.1 lbf) is applied to it. This is to check adjuster rod stiffness.
3) If the adjuster rod is not stiff enough and moves freely when applying 165 N (16.8 kgf, 37.1 lbf), check it using the following procedures:
(1) Slowly press the adjuster rod down to the end surface of cylinder. Repeat this operation two to three times.
(2) With the adjuster rod moved all the way up, apply a pressure of 165 N (16.8 kgf, 37.1 lbf) to it, and check the adjuster rod stiffness.
(3) If the adjuster rod is not stiff and moves down, replace the automatic belt tension adjuster assembly with a new part.

CAUTION:
• Always use a vertical type pressing tool to move the adjuster rod down.
• Do not use a lateral type vise.

• Push the adjuster rod vertically.
• Press-in the push adjuster rod gradually taking three minutes or more.
• Do not allow press pressure to exceed 9,807 N (1,000 kgf, 2,205 lbf).
• Push in the adjuster rod to the end face of the cylinder. However, do not press the adjuster rod below the end face of the cylinder. Doing so may damage the cylinder.

4) Measure the amount of adjuster rod protrusion "L" from the end surface of the cylinder. If it is not within specifications, replace the automatic belt tension adjuster assembly with a new part.

Protrusion amount of adjuster rod L:
5.2 — 6.2 mm (0.205 — 0.244 in)

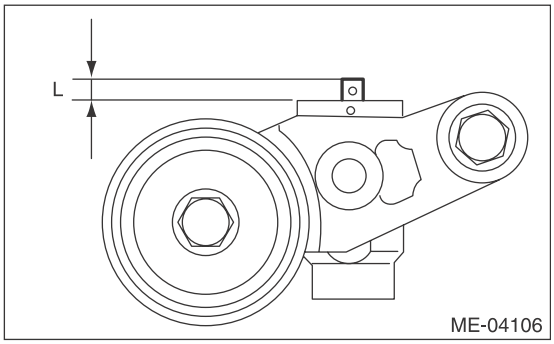

3. BELT TENSION PULLEY

1) Check the mating surfaces of timing belt and contact point of adjuster rod for abnormal wear or scratches. Replace the automatic belt tension adjuster assembly with a new part if faulty.
2) Check the belt tension pulley for smooth rotation. Replace the automatic belt tension adjuster assembly with a new part if abnormal noise or excessive play occurs.
3) Check the belt tension pulley for grease leakage.

4. BELT IDLER

1) Check the belt idler for smooth rotation. Replace if noise or excessive play occurs.
2) Check the outer contacting surfaces of idler pulley for abnormal wear and scratches.
3) Check the belt idler for grease leakage.

16.Cam Sprocket

A: REMOVAL

NOTE:
When replacing the single part, perform the work with the engine installed to vehicle body.
1) Remove the crank pulley. <Ref. to ME(H4DOTC)-44, REMOVAL, Crank Pulley.>
2) Remove the timing belt cover. <Ref. to ME(H4DOTC)-46, REMOVAL, Timing Belt Cover.>
3) Remove the timing belt. <Ref. to ME(H4DOTC)-51, REMOVAL, Timing Belt.>
4) Remove the actuator covers of intake cam sprocket and exhaust cam sprocket.
5) Use the ST to lock the cam sprocket, and remove the cam sprocket bolt.
ST 499977500 CAM SPROCKET WRENCH

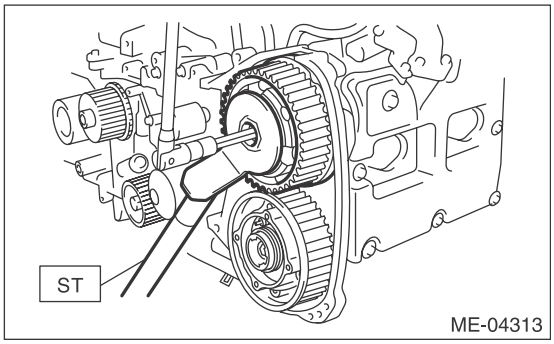

6) Remove the cam sprocket.

B: INSTALLATION

1) Install the cam sprocket.
2) Use the ST to lock the cam sprocket, and install the cam sprocket bolt.

NOTE:
Do not confuse cam sprockets (LH) and (RH) or (INT) and (EXH) during installation.
ST 499977500 CAM SPROCKET WRENCH

Tightening torque:
Tighten to 30 N·m (3.1 kgf-m, 22.1 ft-lb) of torque, and then tighten further by 45°.

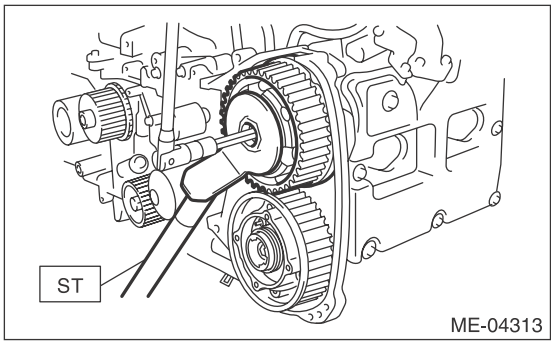

3) Install the actuator covers of intake cam sprocket and exhaust cam sprocket.

NOTE:
Use new O-rings.

Tightening torque:
3.4 N·m (0.3 kgf-m, 2.5 ft-lb)
4) Install the timing belt. <Ref. to ME(H4DOTC)-53, INSTALLATION, Timing Belt.>
5) Install the timing belt cover. <Ref. to ME(H4DOTC)-49, INSTALLATION, Timing Belt Cover.>
6) Install the crank pulley. <Ref. to ME(H4DOTC)-44, INSTALLATION, Crank Pulley.>

C: INSPECTION

1) Check the cam sprocket teeth for abnormal wear and scratches.
2) Make sure there is no free play between cam sprocket and key.

17.Crank Sprocket

A: REMOVAL

NOTE:
When replacing the single part, perform the work with the engine installed to vehicle body.
1) Remove the crank pulley. <Ref. to ME(H4DOTC)-44, REMOVAL, Crank Pulley.>
2) Remove the timing belt cover. <Ref. to ME(H4DOTC)-46, REMOVAL, Timing Belt Cover.>
3) Remove the timing belt. <Ref. to ME(H4DOTC)-51, REMOVAL, Timing Belt.>
4) Remove the crank sprocket.

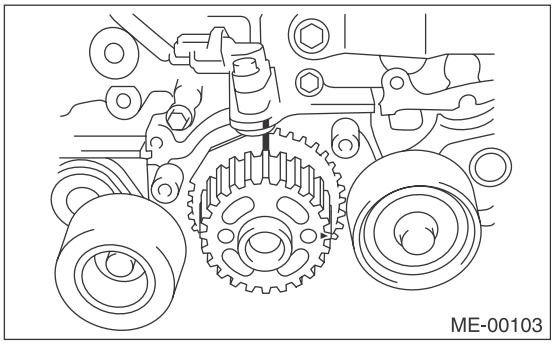

B: INSTALLATION

1) Install the crank sprocket.

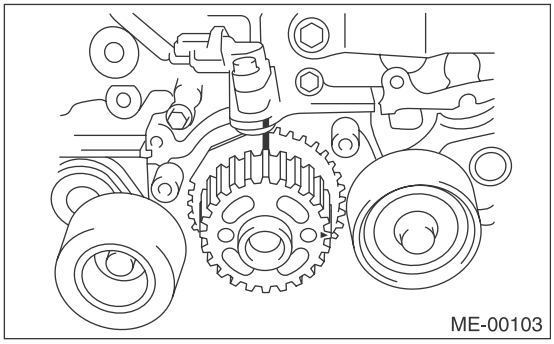

2) Install the timing belt. <Ref. to ME(H4DOTC)-53, INSTALLATION, Timing Belt.>
3) Install the timing belt cover. <Ref. to ME(H4DOTC)-49, INSTALLATION, Timing Belt Cover.>
4) Install the crank pulley. <Ref. to ME(H4DOTC)-44, INSTALLATION, Crank Pulley.>

C: INSPECTION

1) Check the crank sprocket teeth for abnormal wear and scratches.
2) Make sure there is no free play between crank sprocket and key.
3) Check the crank sprocket protrusion used for sensor for damage and contamination of foreign matter.

18.Camshaft

A: REMOVAL

1) Remove the crank pulley. <Ref. to ME(H4DOTC)-44, REMOVAL, Crank Pulley.>
2) Remove the timing belt cover. <Ref. to ME(H4DOTC)-46, REMOVAL, Timing Belt Cover.>
3) Remove the timing belt. <Ref. to ME(H4DOTC)-51, REMOVAL, Timing Belt.>
4) Remove the cam sprocket. <Ref. to ME(H4DOTC)-60, REMOVAL, Cam Sprocket.>
5) Disconnect connectors of the intake oil flow control solenoid valve.



6) Disconnect connectors from exhaust camshaft position sensor (A) and exhaust oil flow control solenoid valve (B).

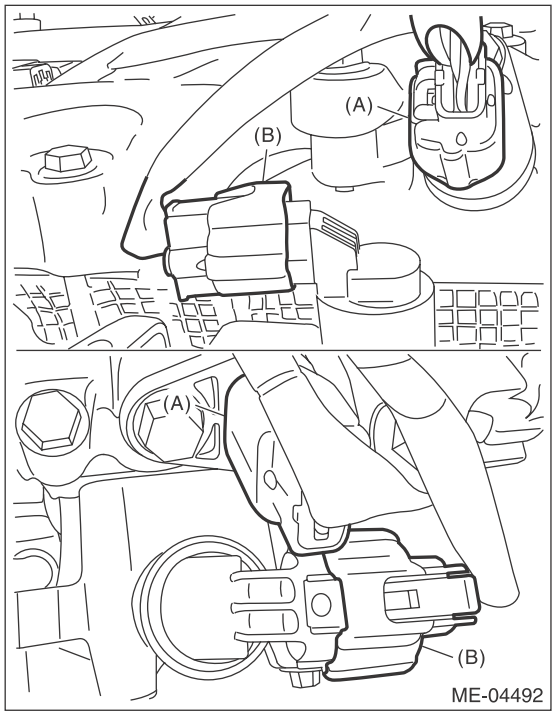

7) Remove the timing belt cover No. 2 (RH) (A) and timing belt cover No. 2 LH (B).

NOTE:
Do not damage or lose the seal rubber when removing the timing belt covers.

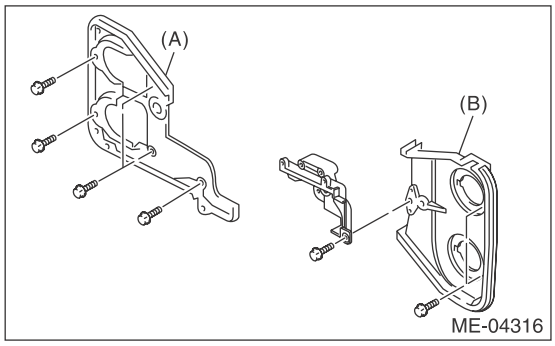

8) Remove the tensioner bracket.

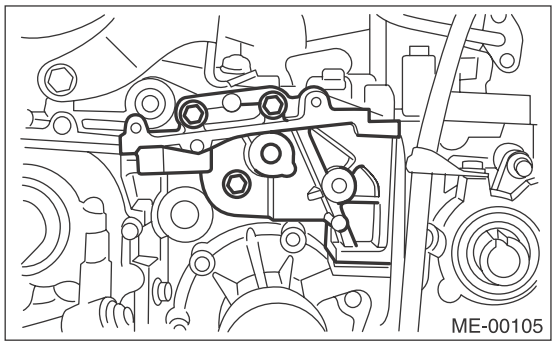

9) Disconnect the oil level switch connector.

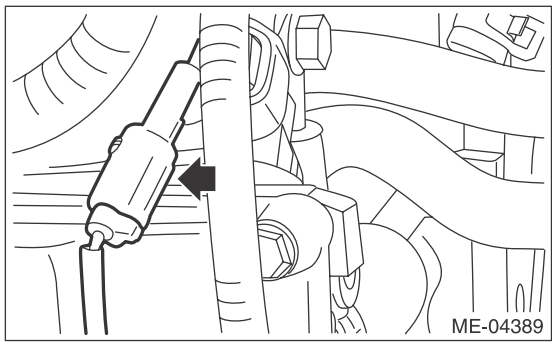

10) Remove the clip (A) and bolt (B) securing the engine harness or oil level switch harness to the rocker cover.

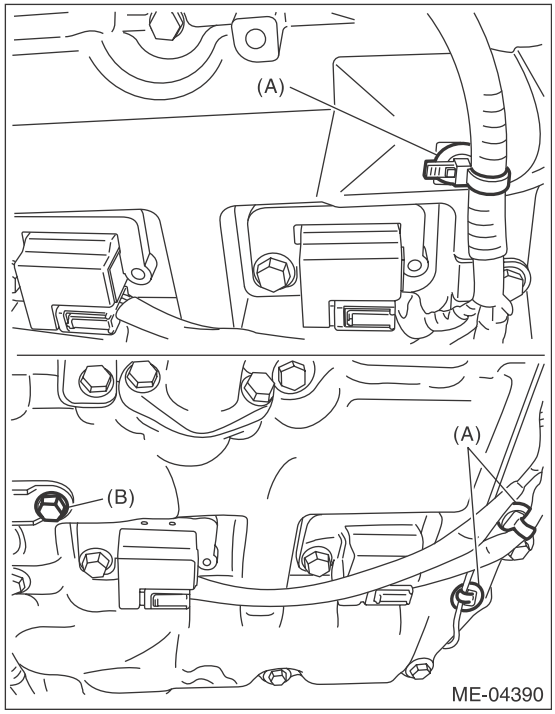

11) Remove the ignition coil. <Ref. to IG(H4DOTC)-6, REMOVAL, Ignition Coil.>
12) Remove the scavenge pump. (RH side only) <Ref. to LU(H4SO)-28, REMOVAL, Scavenge Pump.>
13) Disconnect PCV hose and vacuum hose from the rocker cover.

NOTE:
Pinch the clamp of the PCV hose by fitting the cut out in the ST with the protrusion on the clamp as shown in the figure, and unlock the clamp.
ST 18353AA000 CLAMP PLIERS

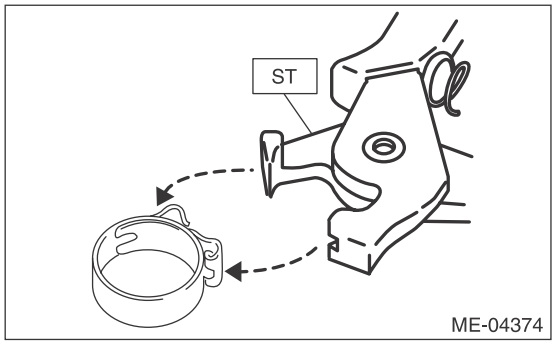

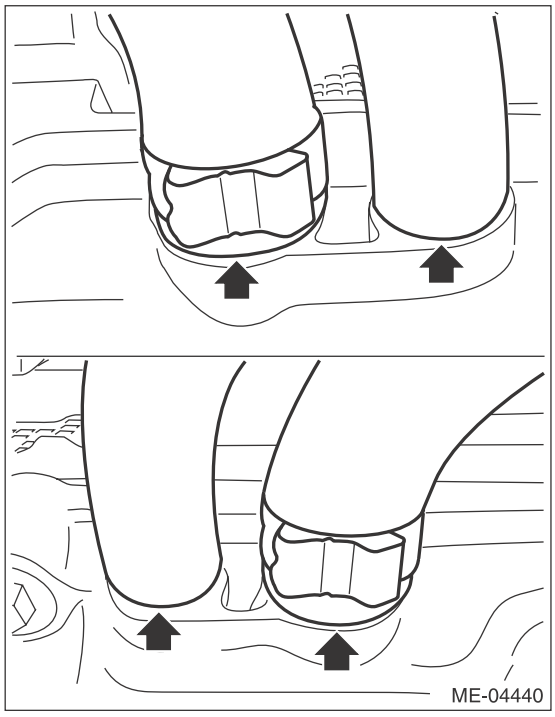

14) Remove the rocker cover.

15) Remove the union bolt without filter (without protrusion) which secures the oil pipe to the front camshaft cap.

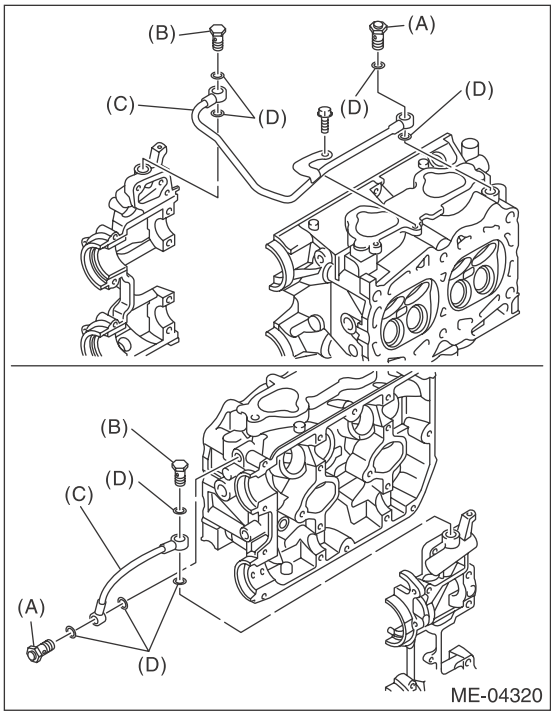

(A) Union bolt with filter (with protrusion)
(B) Union bolt without filter (without protrusion)
(C) Oil pipe
(D) Gasket

16) Loosen the bolts located on the upper side of the front camshaft cap, intake camshaft cap and rear camshaft cap (RH side only) equally, a little at a time in alphabetical order, as shown in the figure.

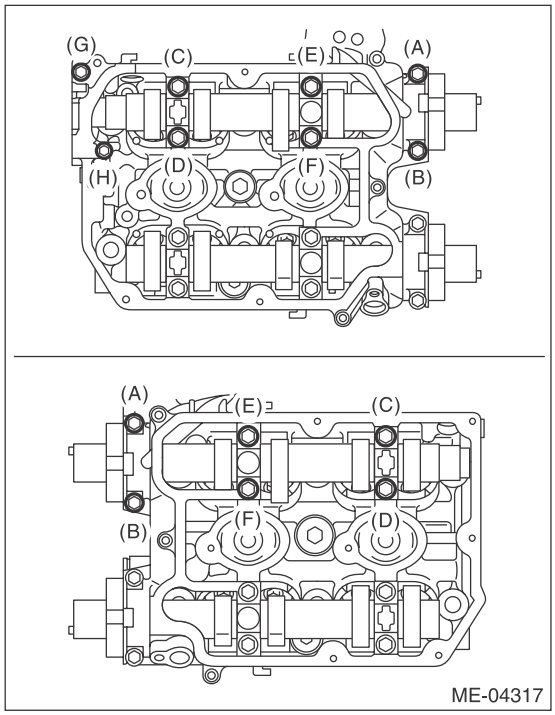

17) Loosen the lower side of the front camshaft cap and the exhaust camshaft cap bolts equally, a little at a time in alphabetical sequence shown in the figure.

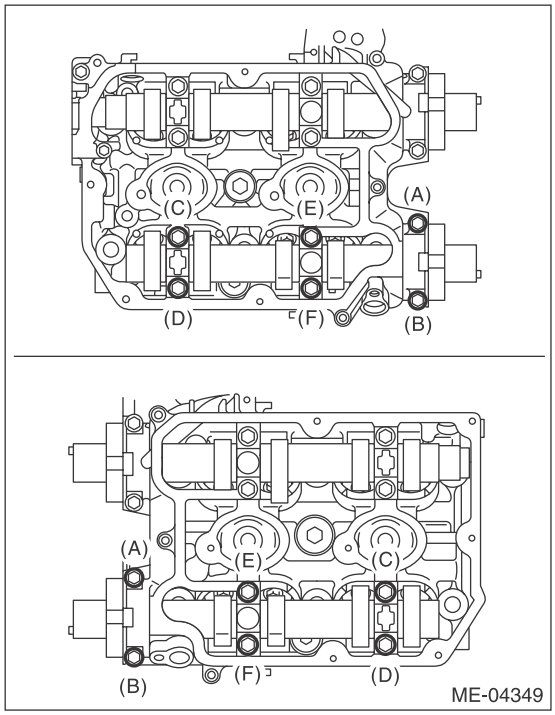

18) Remove the front camshaft cap.
19) Remove the intake camshaft caps, intake camshaft and rear camshaft caps (RH side only).

20) Remove the exhaust camshaft caps and exhaust camshaft.

NOTE:
Arrange camshaft caps in order so that they can be installed in their original positions.
21) Remove the oil seal.

CAUTION:
Do not scratch the journal surface when removing the oil seal.
22) Similarly, remove the camshaft RH and related parts.

B: INSTALLATION

1) Install the camshaft.
Apply engine oil to the cylinder head at camshaft journal installation location before installing the camshaft. Install the camshaft so that each valve is close to or in contact with base circle of the cam lobe.

NOTE:
• Set the camshaft to the position shown in the figure.
• When set at the position shown in the figure, it is not necessary to rotate the camshaft RH when installing the timing belt, but it is necessary to rotate the camshaft LH slightly.

Intake camshaft LH:
Rotate 80° clockwise.

Exhaust camshaft LH:
Rotate 45° counterclockwise.

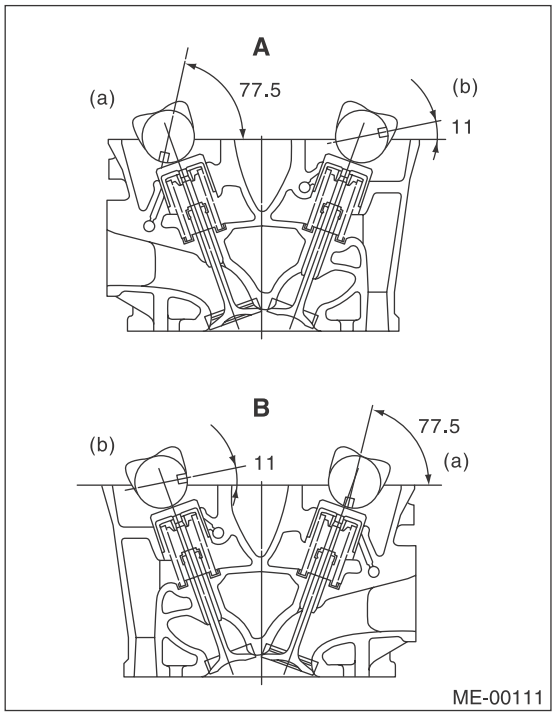

A Cylinder head LH
B Cylinder head RH
(a) Intake camshaft
(b) Exhaust camshaft

2) Install the camshaft cap.
(1) Apply small amount of liquid gasket to the mating surface of front camshaft cap and rear camshaft cap (RH side only).

NOTE:
• Install within 5 min. after applying liquid gasket.
• Do not apply liquid gasket excessively. Applying excessively may cause excess gasket to come out and flow toward oil seal, resulting in oil leak.

Liquid gasket:
THREE BOND 1217G (Part No. K0877Y0100) or equivalent

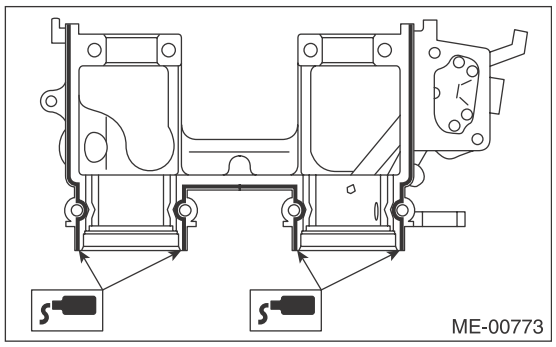

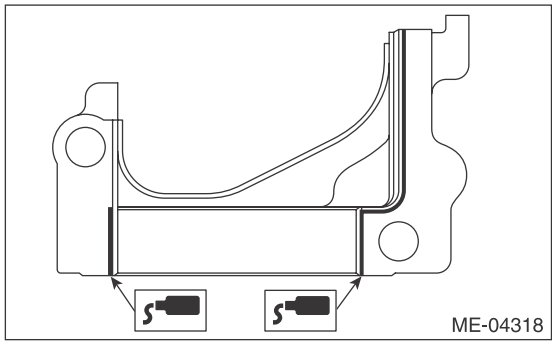

(2) Apply a thin coat of engine oil to the cap journal surface, and install the camshaft cap to the camshaft.
(3) Gradually tighten the camshaft cap in at least two steps, in alphabetical order shown in the figure, and then tighten to the specified torque.

Tightening torque:
T1: 9.75 N·m (1.0 kgf-m, 7.2 ft-lb)
T2: 20 N·m (2.0 kgf-m, 14.8 ft-lb)

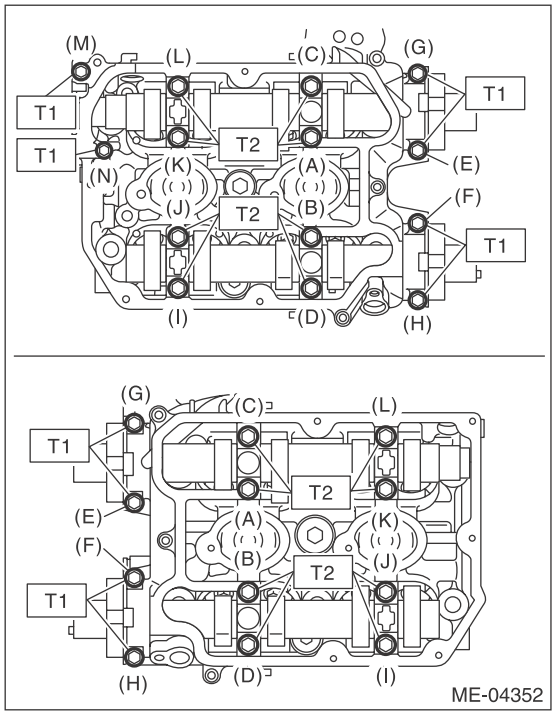

(4) After tightening the camshaft cap, ensure the camshaft rotates only slightly while holding it at base circle.

3) Apply a thin coat of engine oil to the periphery of the camshaft oil seal and oil seal lip, and install the oil seal on the camshaft using ST1 and ST2.

NOTE:
Use a new oil seal.

ST1	499587600	OIL SEAL INSTALLER
ST2	499597200	OIL SEAL GUIDE

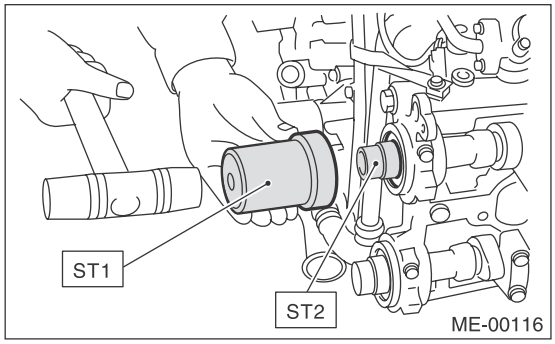

4) Install the oil pipe to the front camshaft cap using the union bolt without filter (without protrusion).

Tightening torque:
29 N·m (3.0 kgf-m, 21.4 ft-lb)

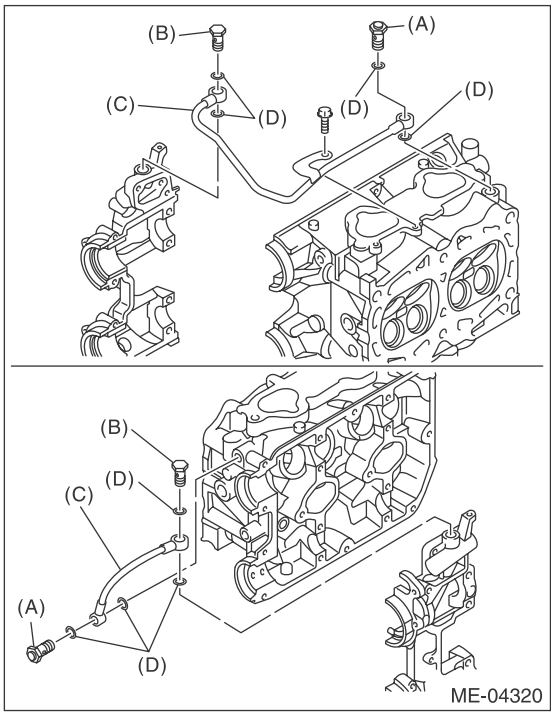

(A) Union bolt with filter (with protrusion)
(B) Union bolt without filter (without protrusion)
(C) Oil pipe
(D) Gasket

5) Install the tensioner bracket.

Tightening torque:
24.5 N·m (2.5 kgf-m, 18.1 ft-lb)

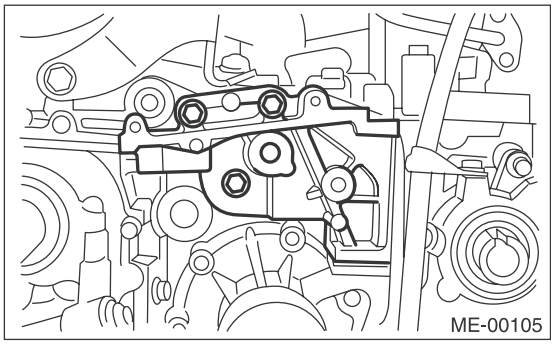

6) Install the timing belt cover No. 2 RH (A) and timing belt cover No. 2 LH (B).

Tightening torque:
5 N·m (0.5 kgf-m, 3.7 ft-lb)

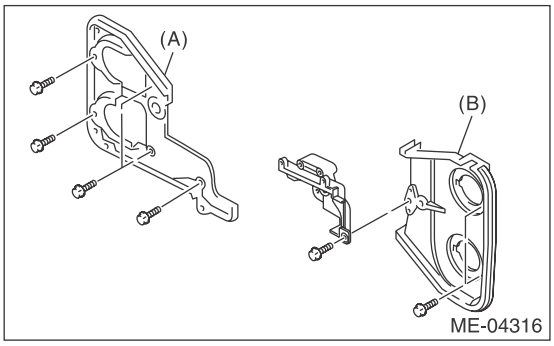

7) Install the cam sprocket. <Ref. to ME(H4DOTC)-60, INSTALLATION, Cam Sprocket.>
8) Install the timing belt. <Ref. to ME(H4DOTC)-53, INSTALLATION, Timing Belt.>
9) Adjust the valve clearance. <Ref. to ME(H4DOTC)-29, ADJUSTMENT, Valve Clearance.>
10) Install the rocker cover.
(1) Install the rocker cover gasket to the rocker cover. (Outer periphery and ignition coil section)

NOTE:
Use a new rocker cover gasket.

(2) Apply liquid gasket to the specified point of the cylinder head.

NOTE:
Install within 5 min. after applying liquid gasket.

Liquid gasket:
THREE BOND 1217G (Part No. K0877Y0100) or equivalent

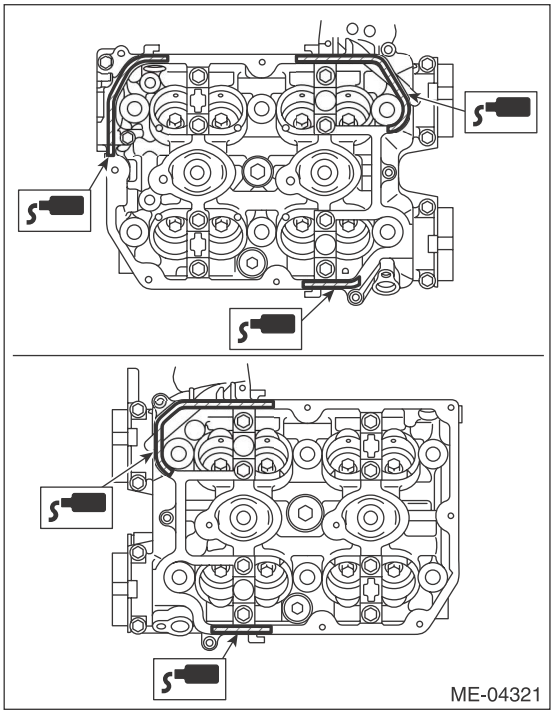

(3) Install the rocker cover to cylinder head. Ensure the gasket is properly positioned during installation.
(4) Temporarily tighten the rocker cover bolts in alphabetical order shown in the figure, and then tighten to specified torque in alphabetical order.

Tightening torque:
6.4 N·m (0.7 kgf-m, 4.7 ft-lb)

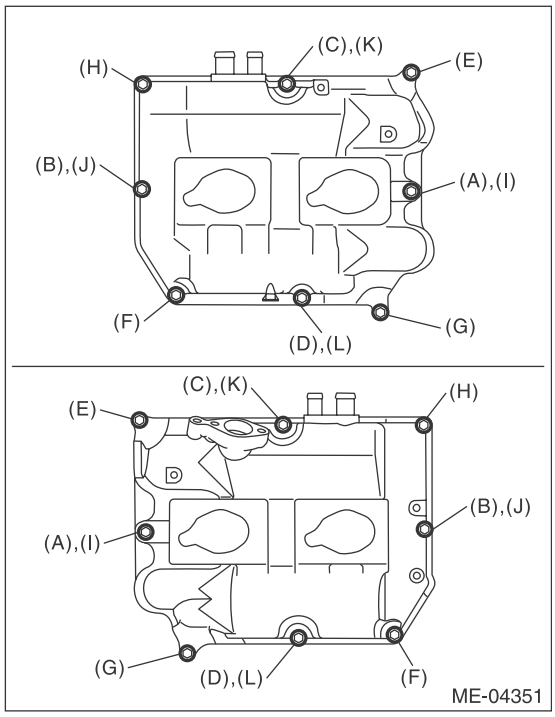

11) Install the scavenge pump. <Ref. to LU(H4SO)-28, INSTALLATION, Scavenge Pump.>
12) Connect the PCV hose and vacuum hose to the rocker cover.

NOTE:
Use a new clamp for the PCV hose clamp, fit the cut out in the ST with the protrusion on the clamp as shown in the figure, and lock the clamp.
ST 18353AA000 CLAMP PLIERS

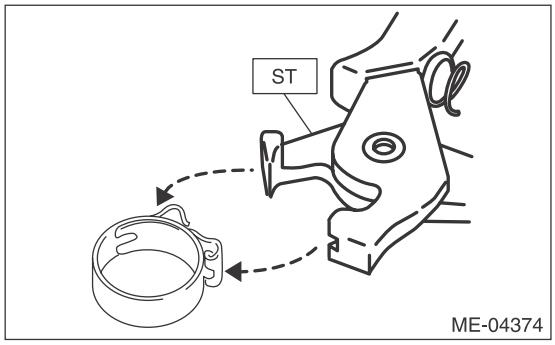

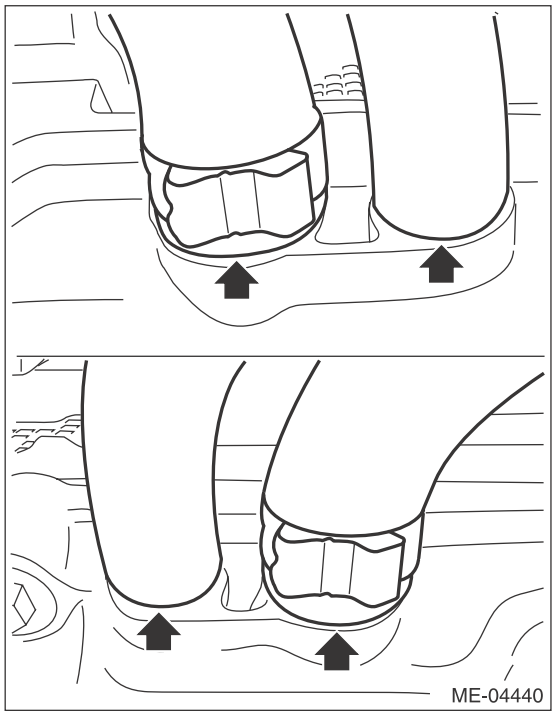

13) Install the ignition coil. <Ref. to IG(H4DOTC)-6, INSTALLATION, Ignition Coil.>
14) Secure the engine harness or oil level switch harness to the rocker cover with the clip (A) and bolt (B).

Tightening torque:
6.4 N·m (0.7 kgf-m, 4.7 ft-lb)

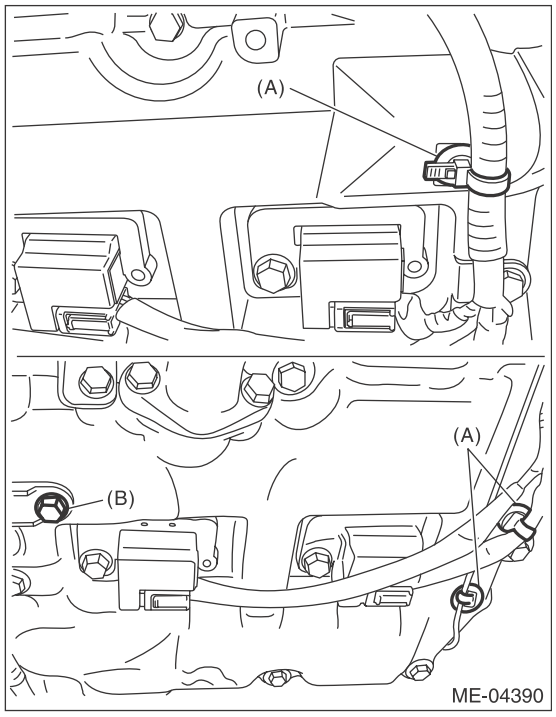

15) Connect the connector to the oil level switch.

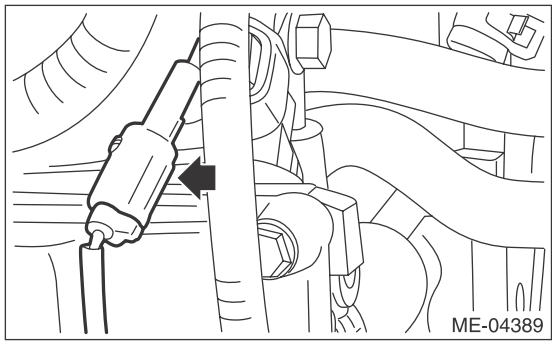

16) Connect the connectors to the intake oil flow control solenoid valve.

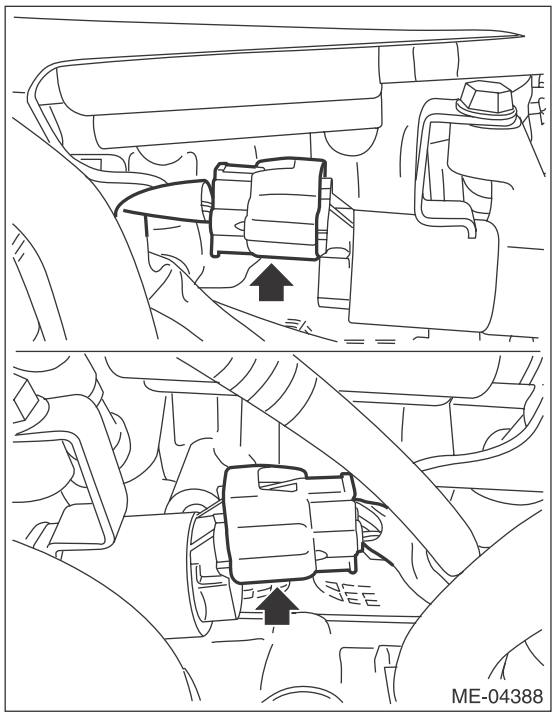

17) Connect the connectors to exhaust camshaft position sensor (A) and exhaust oil flow control solenoid valve (B).

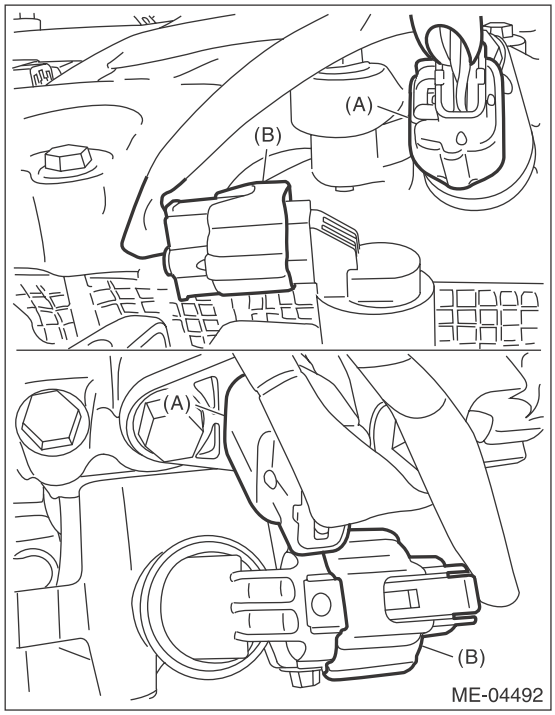

18) Install the timing belt cover. <Ref. to ME(H4DOTC)-49, INSTALLATION, Timing Belt Cover.>
19) Install the crank pulley. <Ref. to ME(H4DOTC)-44, INSTALLATION, Crank Pulley.>

C: INSPECTION

1) Measure the bend, and repair or replace if necessary.

Camshaft bend limit:
0.020 mm (0.00079 in)

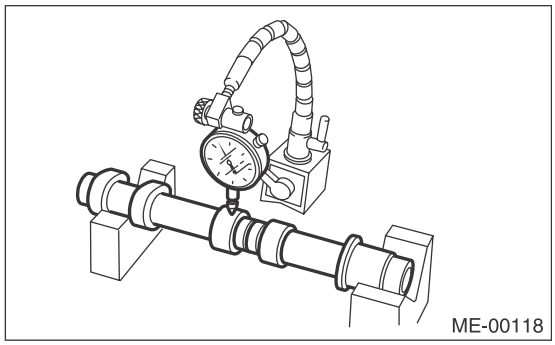

2) Check the journal for damage and wear. Replace if faulty.
3) Check the cutout portion used for camshaft sensor for damage. Replace if faulty.
4) Check the cam face condition, and remove the minor faults by grinding with oil stone. Replace if there is uneven wear or others.
5) Measure the cam lobe height “H” and cam base circle diameter “A”. If it exceeds the standard or offset wear occurs, replace it.

Cam lobe height H:

Standard
Intake
46.55 — 46.65 mm (1.833 — 1.837 in)
Exhaust
45.85 — 45.95 mm (1.805 — 1.809 in)

Cam base circle diameter A:
Standard
37.0 mm (1.457 in)

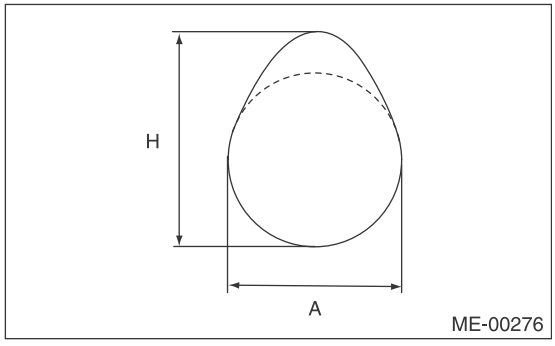

6) Measure the outside diameter of camshaft journal. If the journal diameter is not within specification, check the oil clearance.

	Camshaft journal	
	Front	Center, rear
Standard mm (in)	37.946 — 37.963 (1.4939 — 1.4946)	29.946 — 29.963 (1.1790 — 1.1796)

7) Measure the oil clearance of camshaft journal.
(1) Clean the camshaft cap and cylinder head camshaft journal.
(2) Place the camshaft on cylinder head. (Without installing the valve lifter)
(3) Place a plastigauge across each camshaft journals.
(4) Gradually tighten the camshaft cap in at least two steps, in alphabetical order shown in the figure, and then tighten to the specified torque. Do not turn the camshaft.

Tightening torque:
T1: 9.75 N·m (1.0 kgf-m, 7.2 ft-lb)
T2: 20 N·m (2.0 kgf-m, 14.8 ft-lb)

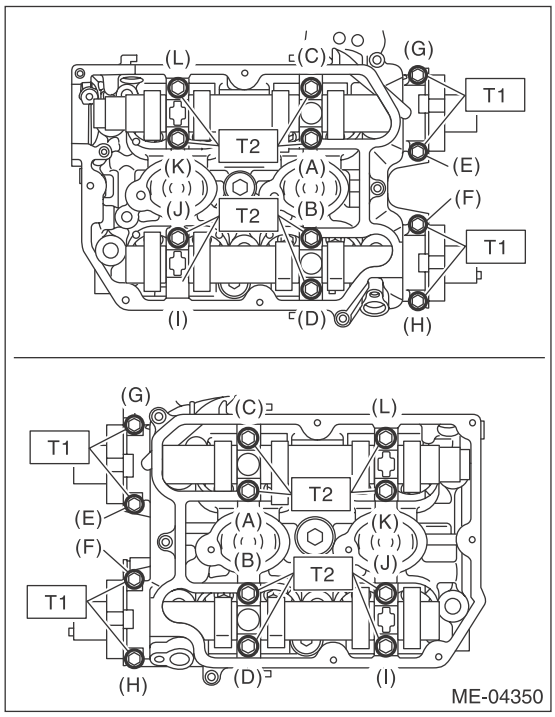

(5) Remove the camshaft cap.
(6) Measure the widest point of the plastigauge on each journal. If oil clearance exceeds the standard, replace the camshaft. If necessary, replace the camshaft caps and cylinder head as a set.

Camshaft oil clearance:
Standard
0.037 — 0.072 mm (0.0015 — 0.0028 in)

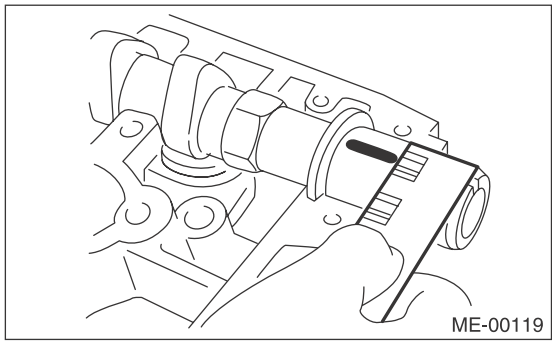

(7) Completely remove the plastigauge.

8) Measure the thrust clearance of camshaft with the dial gauge set at end of camshaft. If the thrust clearance is not within the standard or there is offset wear, replace the camshaft caps and cylinder head as a set. If necessary replace the camshaft.

Camshaft thrust clearance:
Standard
0.068 — 0.116 mm (0.0027 — 0.0047 in)

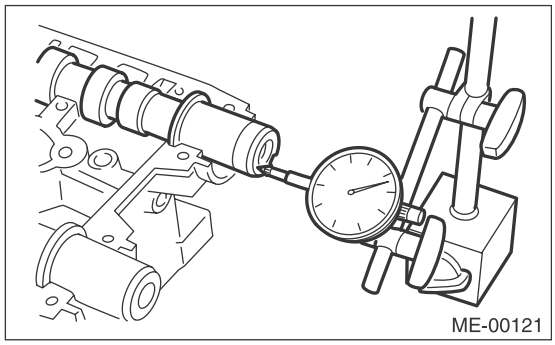

19.Cylinder Head

A: REMOVAL

1) Remove the intake manifold. <Ref. to FU(H4DOTC)-17, REMOVAL, Intake Manifold.>
2) Remove the crank pulley. <Ref. to ME(H4DOTC)-44, REMOVAL, Crank Pulley.>
3) Remove the timing belt cover. <Ref. to ME(H4DOTC)-46, REMOVAL, Timing Belt Cover.>
4) Remove the timing belt. <Ref. to ME(H4DOTC)-51, REMOVAL, Timing Belt.>
5) Remove the cam sprocket. <Ref. to ME(H4DOTC)-60, REMOVAL, Cam Sprocket.>
6) Remove the bolt which holds A/C compressor bracket onto cylinder head. (LH side only)
7) Remove the oil pipe. <Ref. to LU(H4SO)-29, REMOVAL, Oil Pipe.>
8) Remove the clip stay.

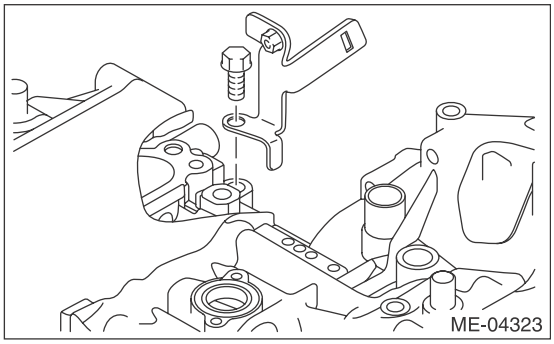
ME-04323

9) Remove the camshaft. <Ref. to ME(H4DOTC)-62, REMOVAL, Camshaft.>
10) Remove the oil level gauge guide. (LH side only)
11) Remove the cylinder head bolts in alphabetical order shown in the figure.

NOTE:
Leave the bolts (A) and (D) engaged by three or four threads to prevent the cylinder head from falling.

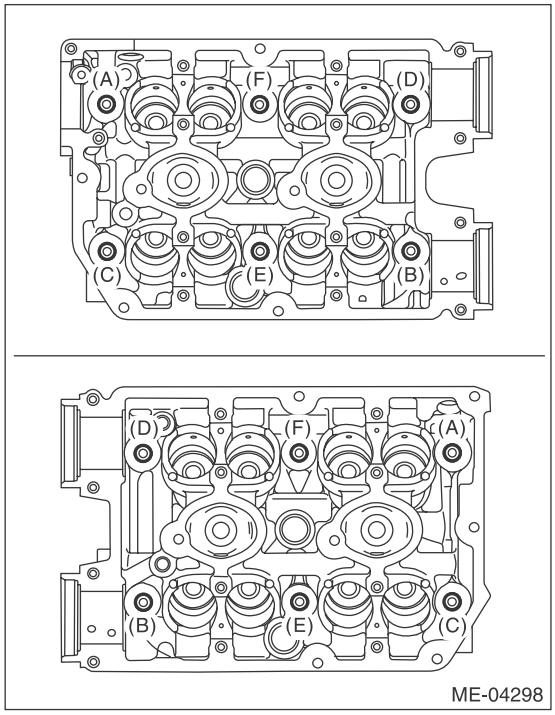

12) While tapping the cylinder head with a plastic hammer, separate it from cylinder block. Remove the bolts (A) and (D) to remove cylinder head.

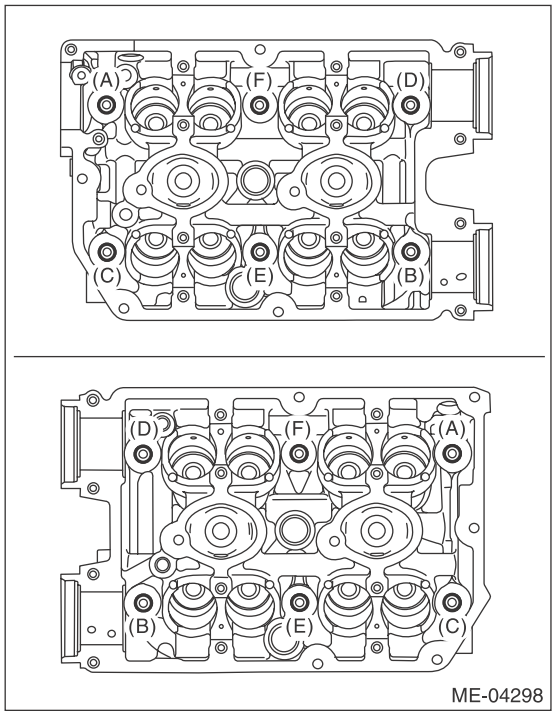

13) Remove the cylinder head gasket.

CAUTION:
Be careful not to scratch the mating surface of cylinder head and cylinder block.

B: INSTALLATION

1) Install the cylinder head to the cylinder block.

CAUTION:
Be careful not to scratch the mating surface of cylinder head and cylinder block.

NOTE:
Use a new cylinder head gasket.

(1) Clean the bolt threads and the bolt holes in the cylinder block.

CAUTION:
To avoid erroneous tightening of the bolts, clean out the bolt holes sufficiently by blowing with compressed air to eliminate engine coolant etc.

(2) Apply a sufficient coat of engine oil to the washer and bolt thread.
(3) Tighten all bolts to 40 N·m (4.1 kgf-m, 29.5 ft-lb) in alphabetical order.
(4) Retighten all bolts to 95 N·m (9.7 kgf-m, 70.1 ft-lb) in alphabetical order.

CAUTION:
If the bolt makes stick-slip sound during tightening, repeat the procedure from step (1). In this case, the cylinder head gasket can be reused.

(5) Loosen all the bolts by 180° in the reverse order of installing, and loosen them further by 180°.
(6) Tighten all bolts to 10 N·m (1.0 kgf-m, 7.4 ft-lb) in alphabetical order.
(7) Retighten all bolts to 30 N·m (3.1 kgf-m, 22.1 ft-lb) in alphabetical order.
(8) Retighten all bolts to 70 N·m (7.1 kgf-m, 51.6 ft-lb) in alphabetical order.
(9) Retighten all bolts by 80 — 90° in alphabetical order.
(10) Retighten all bolts by 40 — 45° in alphabetical order.

CAUTION:
The tightening angle of the bolt should not exceed 45°.

(11) Retighten bolts (A) and (B) by 40 — 45°.

CAUTION:
Make sure the total "tightening angle" of steps (10) and (11) does not exceed 90°.

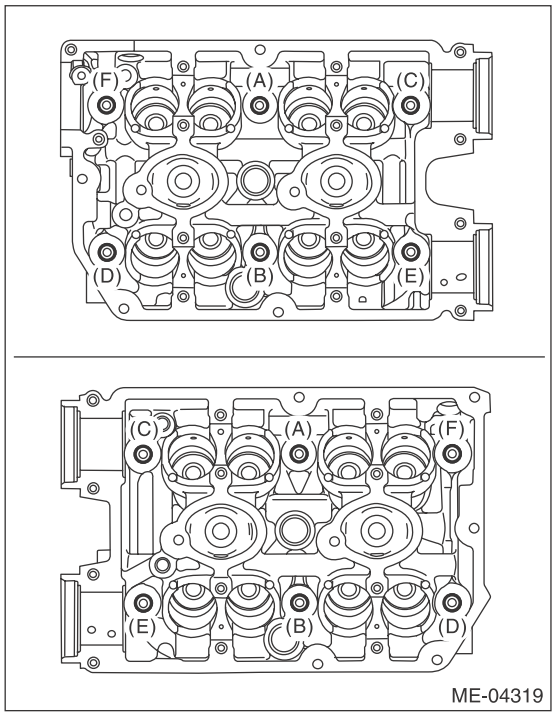

2) Install the oil level gauge guide. (LH side only)

Tightening torque:
6.4 N·m (0.7 kgf-m, 4.7 ft-lb)

3) Install the camshaft. <Ref. to ME(H4DOTC)-65, INSTALLATION, Camshaft.>
4) Install the clip stay.

Tightening torque:
36 N·m (3.7 kgf-m, 26.6 ft-lb)

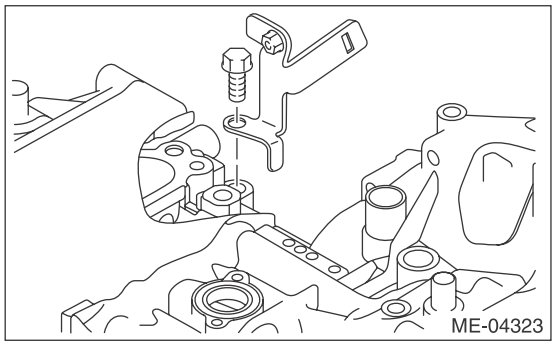

5) Install the oil pipe. <Ref. to LU(H4SO)-31, INSTALLATION, Oil Pipe.>
6) Install the A/C compressor bracket on cylinder head. (LH side only)

Tightening torque:
36 N·m (3.7 kgf-m, 26.6 ft-lb)

7) Install the cam sprocket. <Ref. to ME(H4DOTC)-60, INSTALLATION, Cam Sprocket.>
8) Install the timing belt. <Ref. to ME(H4DOTC)-53, INSTALLATION, Timing Belt.>
9) Adjust the valve clearance. <Ref. to ME(H4DOTC)-29, ADJUSTMENT, Valve Clearance.>

10) Install the rocker cover.
(1) Install the rocker cover gasket to the rocker cover. (Outer periphery and ignition coil section)

NOTE:
Use a new rocker cover gasket.

(2) Apply liquid gasket to the specified point of the cylinder head.

NOTE:
Install within 5 min. after applying liquid gasket.

Liquid gasket:
THREE BOND 1217G (Part No. K0877Y0100) or equivalent

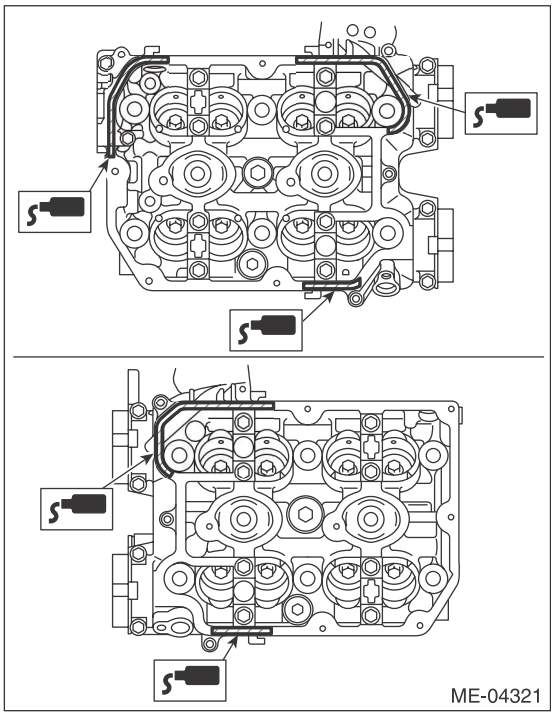

(3) Install the rocker cover to cylinder head. Ensure the gasket is properly positioned during installation.
(4) Temporarily tighten the rocker cover bolts in alphabetical order shown in the figure, and then tighten to specified torque in alphabetical order.

Tightening torque:
6.4 N·m (0.7 kgf-m, 4.7 ft-lb)

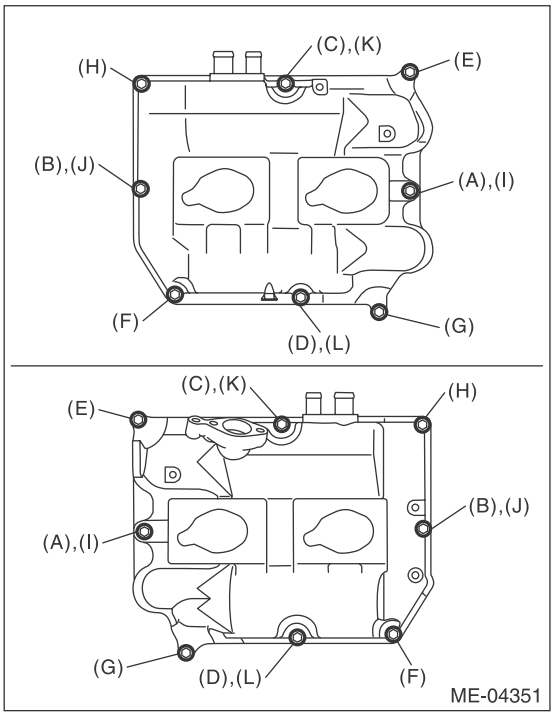

11) Connect the PCV hose to the rocker cover.
12) Install the timing belt cover. <Ref. to ME(H4DOTC)-49, INSTALLATION, Timing Belt Cover.>
13) Install the crank pulley. <Ref. to ME(H4DOTC)-44, INSTALLATION, Crank Pulley.>
14) Install the intake manifold. <Ref. to FU(H4DOTC)-21, INSTALLATION, Intake Manifold.>

C: DISASSEMBLY

1) Remove the valve lifter.
2) Place the cylinder head on ST1.
ST1 498267600 CYLINDER HEAD TABLE
3) Using ST2, compress the valve spring and remove the valve spring retainer key. Remove each valve and valve spring.
ST2 499718000 VALVE SPRING REMOVER

NOTE:
- Mark each valve to prevent confusion.
- Pay careful attention not to damage the lips of intake valve oil seals and exhaust valve oil seals.
- Keep all the removed parts in order for re-installing in their original positions.
- For removal and installation procedures of the valve guide, intake valve oil seal and exhaust valve oil seal, refer to “INSPECTION”. <Ref. to ME(H4DOTC)-77, VALVE GUIDE, INSPECTION, Cylinder Head.> <Ref. to ME(H4DOTC)-79, INTAKE AND EXHAUST VALVE OIL SEAL, INSPECTION, Cylinder Head.>

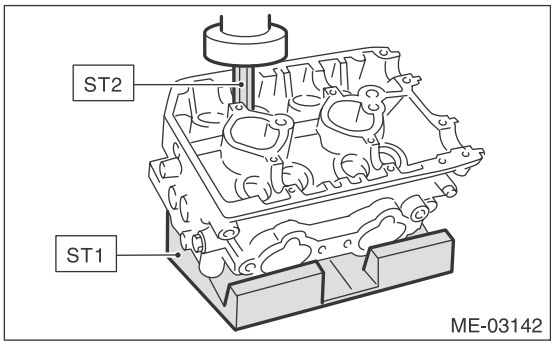

D: ASSEMBLY

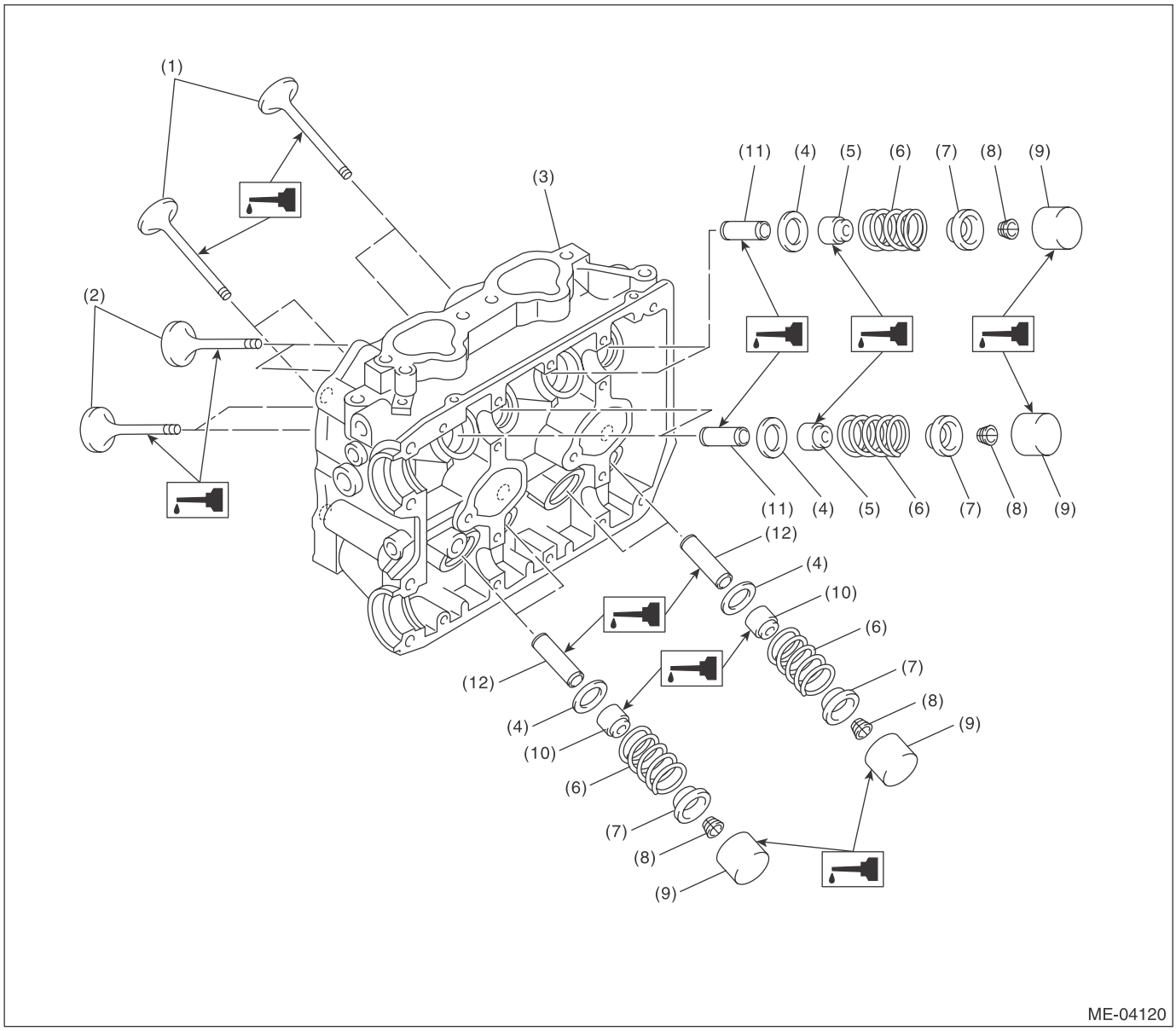

(1) Exhaust valve
(2) Intake valve
(3) Cylinder head
(4) Valve spring seat
(5) Intake valve oil seal
(6) Valve spring
(7) Retainer
(8) Retainer key
(9) Valve lifter
(10) Exhaust valve oil seal
(11) Intake valve guide
(12) Exhaust valve guide

1) Install the valve spring and valve.
(1) Coat the valve stem of each valve with engine oil and insert the valve into valve guide.

NOTE:
When inserting the valve into valve guide, use special care not to damage the oil seal lip.

(2) Set the cylinder head on ST1.

ST1 498267600 CYLINDER HEAD TABLE

(3) Install the valve spring and retainer.

NOTE:
Be sure to install the valve spring with its close-coiled end facing the cylinder head.

(4) Set the ST2 on valve spring.

ST2 499718000 VALVE SPRING REMOVER

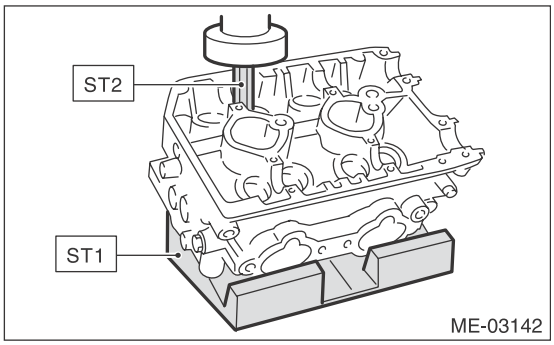

(5) Compress the valve spring and fit the valve spring retainer key.
(6) After installing, tap the valve spring retainers lightly with a plastic hammer for better seating.

2) Apply oil to the surface of valve lifter.
3) Install the valve lifter.

E: INSPECTION

1. CYLINDER HEAD

1) Check for cracks or damage. Use liquid penetrant tester on the important sections to check for fissures. Check that there are no marks of gas leaking or water leaking on gasket installing surface.
2) Measure the warping of the cylinder head surface that mates with cylinder block using a straight edge (A) and thickness gauge (B).
If the warping exceeds the limit, correct the surface by grinding it with a surface grinder.

Warping limit:
0.035 mm (0.0014 in)

Grinding limit:
0.3 mm (0.012 in)

Standard height of cylinder head:
127.5 mm (5.02 in)

NOTE:
Uneven torque for the cylinder head bolts can cause warping. When reinstalling, pay special attention to the torque so as to tighten evenly.

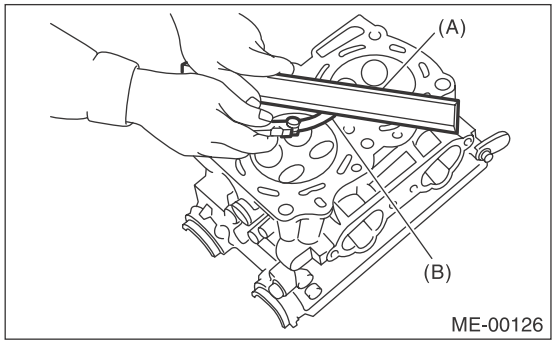

2. VALVE SEAT

Inspect the intake and exhaust valve seats, and correct the contact surfaces with a valve seat cutter if they are defective or when valve guides are replaced.

Contacting width of valve and valve seat W:

Standard
Intake
0.6 — 1.4 mm (0.024 — 0.055 in)
Exhaust
1.2 — 1.8 mm (0.047 — 0.071 in)

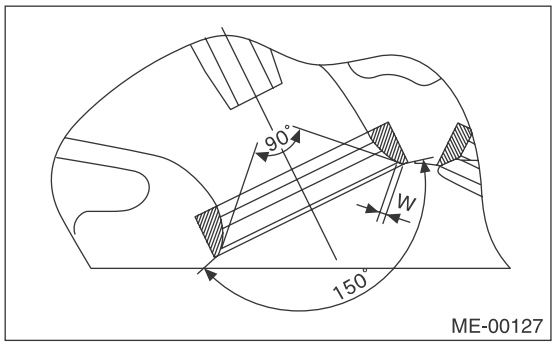

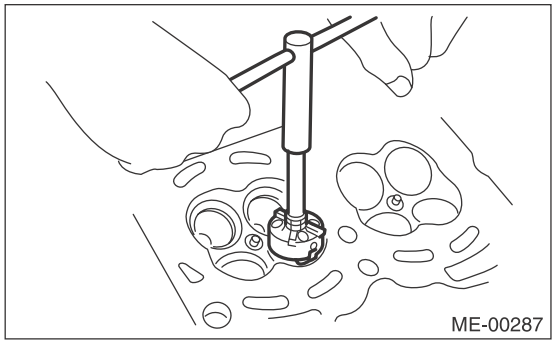

3. VALVE GUIDE

1) Check the clearance between valve guide and valve stem. The clearance can be checked by measuring respectively the outer diameter of valve stem with a micrometer and the inner diameter of valve guide with a caliper gauge.

Clearance between the valve guide and valve stem:

Standard
Intake
0.030 — 0.057 mm (0.0012 — 0.0022 in)
Exhaust
0.040 — 0.067 mm (0.0016 — 0.0026 in)

2) If the clearance between valve guide and valve stem exceeds the standard, replace the valve guide or valve itself, whichever shows the greater amount of wear or damage. See the following procedure for valve guide replacement.

Valve guide inner diameter:
6.000 — 6.012 mm (0.2362 — 0.2367 in)

Valve stem outer diameters:
Intake
5.955 — 5.970 mm (0.2344 — 0.2350 in)
Exhaust
5.945 — 5.960 mm (0.2341 — 0.2346 in)

(1) Place the cylinder head on ST1 with the combustion chamber upward so that valve guides fit the holes in ST1.
(2) Insert the ST2 into valve guide and press it down to remove the valve guide.

ST1 498267600 CYLINDER HEAD TABLE
ST2 499767200 VALVE GUIDE REMOVER

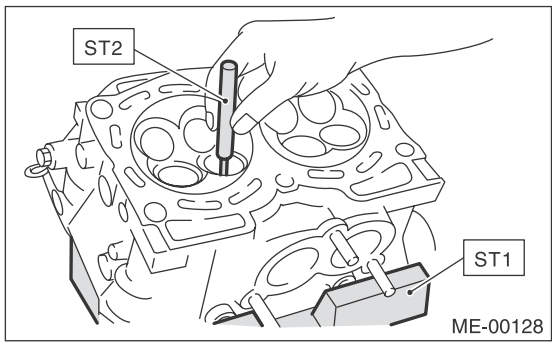

(3) Turn the cylinder head upside down and place the ST as shown in the figure.

ST 18251AA020 VALVE GUIDE ADJUSTER

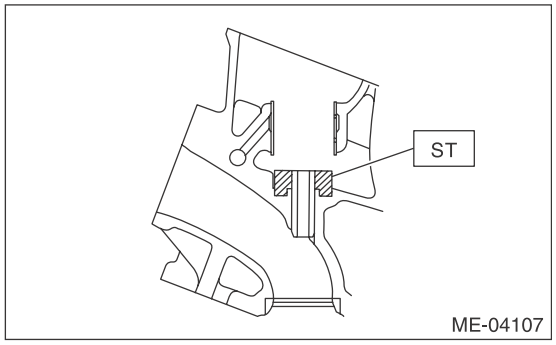

(4) Before installing a new valve guide, make sure that neither scratches nor damages exist on the inner surface of valve guide holes in cylinder head.
(5) Coat a new valve guide with sufficient oil, put it into the cylinder head, and insert the ST1 into the valve guide. Press in until the valve guide upper end is flush with the upper surface of ST2.

ST1 499767200 VALVE GUIDE REMOVER
ST2 18251AA020 VALVE GUIDE ADJUSTER

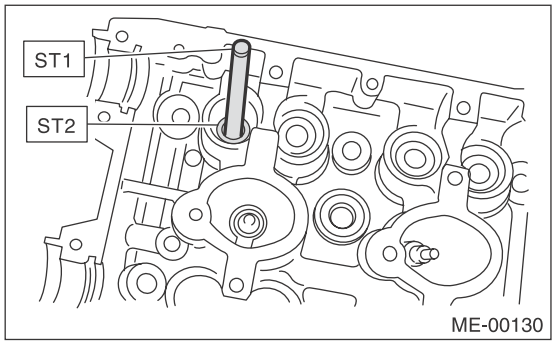

(6) Check the valve guide protrusion amount "L".

Valve guide protrusion amount L:
15.8 — 16.2 mm (0.622 — 0.638 in)

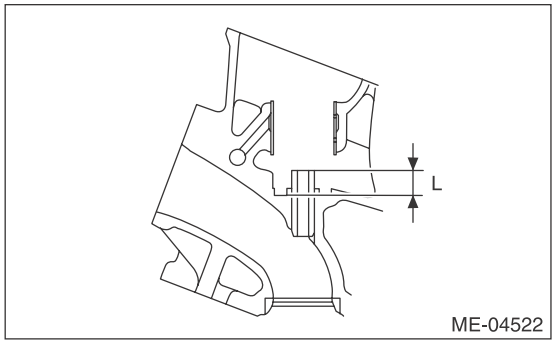

(7) Ream the inside of valve guide using ST. Put the ST in valve guide, and rotate the ST slowly clockwise while pushing it lightly. Bring the ST back while rotating it clockwise.

NOTE:
• Apply engine oil to the ST when reaming.
• If the inner surface of valve guide is damaged, the edge of ST should be slightly ground with oil stone.

• If the inner surface of valve guide becomes lustrous and the ST does not chip, use a new ST or remedy the ST.
ST 499767400 VALVE GUIDE REAMER

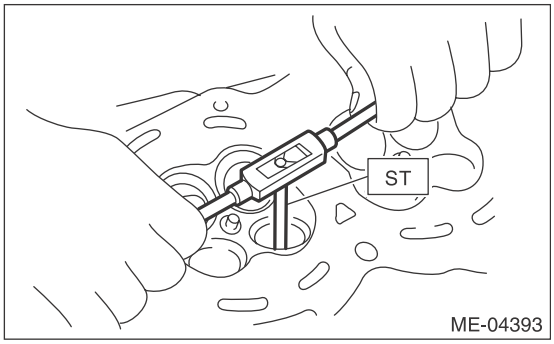

(8) After reaming, clean the valve guide to remove chips.
(9) Recheck the contact condition between valve and valve seat after replacing the valve guide.

4. INTAKE AND EXHAUST VALVE

1) Inspect the flange and valve stem of valve, and replace the valve with a new part if damaged, worn, deformed, or if dimension "H" in the figure is outside of the specified limit.

Head edge thickness H:

Standard
Intake (A)
1.0 — 1.4 mm (0.039 — 0.055 in)
Exhaust (B)
1.3 — 1.7 mm (0.051 — 0.067 in)

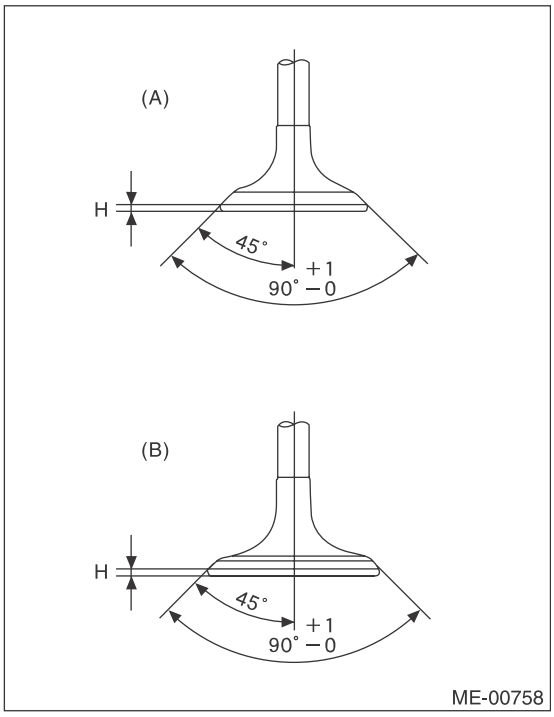

2) Put a small amount of grinding compound on the valve seat surface, and lap the valve and valve seat surface. Replace with a new valve oil seal after lapping.

NOTE:
It is possible to differentiate between the intake valve and the exhaust valve by their overall length.

Valve overall length:
Intake
104.4 mm (4.110 in)
Exhaust
104.65 mm (4.1201 in)

5. VALVE SPRING

1) Check the valve springs for damage, free length, and tension. Replace the valve spring if it is not within the standard value presented in the table.
2) To measure the squareness of the valve spring, stand the valve spring on a surface plate and measure its deflection at the top of valve spring using a right angle gauge.

Free length mm (in)		47.32 (1.863)
Tension/spring height N (kgf, lbf)/mm (in)	Set	205 — 235 (20.90 — 23.96, 46.09 — 52.84)/36.0 (1.417)
	Lift	426 — 490 (43.44 — 49.96, 95.78 — 110.17) /26.5 (1.043)
Squareness		2.5°, 2.1 mm (0.083 in) or less

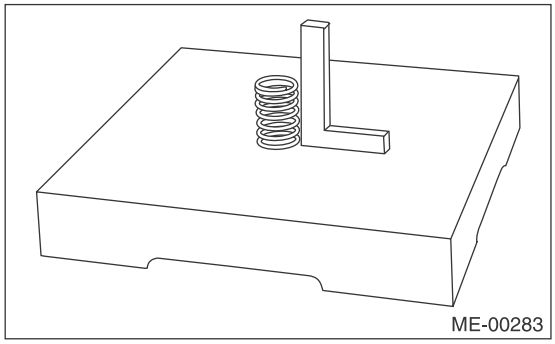

6. INTAKE AND EXHAUST VALVE OIL SEAL

1) For the following, replace the oil seal with a new part. See the procedure 2) and subsequent for replacement procedures.
• When the lip is damaged.
• When the spring is out of the specified position.
• When readjusting the surfaces of valve and valve seat.
• When replacing the valve guide.
2) Place the cylinder head on ST1, and use ST2 to press-fit the oil seal.
ST1 498267600 CYLINDER HEAD TABLE
ST2 498857100 VALVE OIL SEAL GUIDE

NOTE:
• Apply engine oil to oil seal before press-fitting.
• When press-fitting the oil seal, do not use a hammer or strike in.
• The intake valve oil seals and exhaust valve oil seals are distinguished by their colors.

Color of rubber part:
Intake [Gray]
Exhaust [Green]

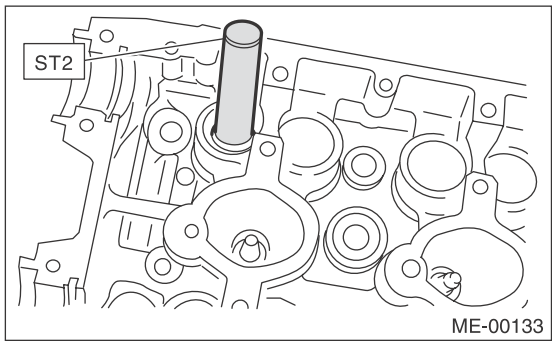

7. VALVE LIFTER

1) Perform visual check on the valve lifter.
2) Measure the valve lifter outer diameter.

Outer diameter of valve lifter:
34.959 — 34.975 mm (1.3763 — 1.3770 in)

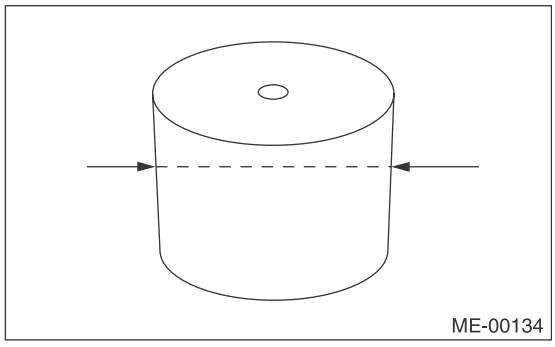

3) Measure the inner diameter of valve lifter mating surface on cylinder head.

Inner diameter of valve lifter mating surface:
34.994 — 35.016 mm (1.3777 — 1.3786 in)

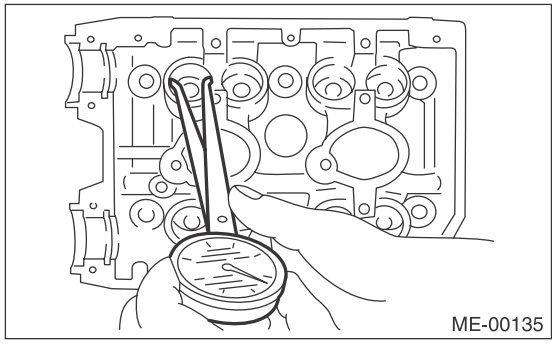

4) Check the clearance between valve lifter and valve lifter mating surface. The clearance can be determined from the measured value of the valve lifter outer diameter and valve lifter mating surface inner diameter. If it is not within the standard or there is uneven wear in the inner surface, replace the cylinder head.

Clearance between valve lifter and valve lifter mating surface:
Standard
0.019 — 0.057 mm (0.0007 — 0.0022 in)

20.Cylinder Block

A: REMOVAL

NOTE:
Before conducting this procedure, drain the engine oil completely.
1) Remove the intake manifold. <Ref. to FU(H4DOTC)-17, REMOVAL, Intake Manifold.>
2) Remove the crank pulley. <Ref. to ME(H4DOTC)-44, REMOVAL, Crank Pulley.>
3) Remove the timing belt cover. <Ref. to ME(H4DOTC)-46, REMOVAL, Timing Belt Cover.>
4) Remove the timing belt. <Ref. to ME(H4DOTC)-51, REMOVAL, Timing Belt.>
5) Remove the cam sprocket. <Ref. to ME(H4DOTC)-60, REMOVAL, Cam Sprocket.>
6) Remove the crank sprocket. <Ref. to ME(H4DOTC)-61, REMOVAL, Crank Sprocket.>
7) Remove the A/C compressor together with the bracket.
8) Remove the camshaft. <Ref. to ME(H4DOTC)-62, REMOVAL, Camshaft.>
9) Remove the cylinder head. <Ref. to ME(H4DOTC)-72, REMOVAL, Cylinder Head.>
10) Remove the clutch disc and cover. <Ref. to CL-11, REMOVAL, Clutch Disc and Cover.>
11) Remove the flywheel. <Ref. to CL-14, REMOVAL, Flywheel.>
12) Remove the oil separator cover.
13) Remove the oil filter. <Ref. to LU(H4SO)-34, REMOVAL, Engine Oil Filter.>
14) Remove the oil cooler. <Ref. to LU(H4SO)-25, REMOVAL, Engine Oil Cooler.>
15) Remove the water pump. <Ref. to CO(H4DOTC)-16, REMOVAL, Water Pump.>
16) Remove the bolt which secures the oil pump to the cylinder block.

NOTE:
When disassembling and checking the oil pump, loosen the relief valve plug before removing the oil pump.

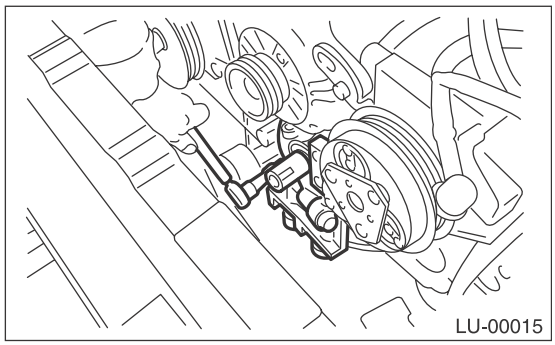
LU-00015

17) Remove the oil pump from cylinder block using a flat tip screwdriver.

CAUTION:
Be careful not to damage the mating surface of the cylinder block and oil pump.

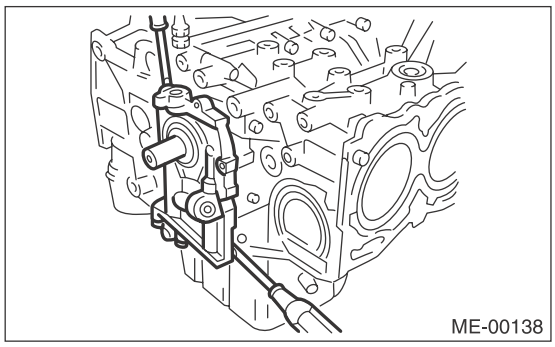
ME-00138

18) Remove the front oil seal from the oil pump.
19) Remove the clip holding the oil level switch harness from cylinder block.

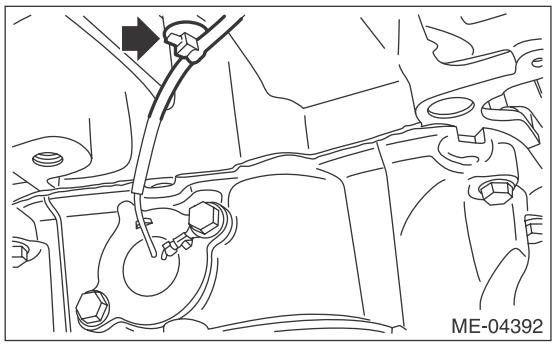
ME-04392

20) Remove the oil pan and cylinder block lower.
(1) Set the part so that the cylinder block LH is on the upper side.
(2) Remove the bolts which secure the oil pan to the cylinder block lower.
(3) Insert an oil pan cutter blade into the gap between cylinder block lower and oil pan, and remove the oil pan.

CAUTION:
Do not use a screwdriver or similar tools in place of oil pan cutter.

(4) Remove the bolts which secure the cylinder block lower to the cylinder block, and remove the cylinder block lower by using flat tip screwdriver.

CAUTION:
Insert the flat tip screwdriver at the position shown in the figure, and avoid scratching the mating surface of the cylinder block and cylinder block lower.

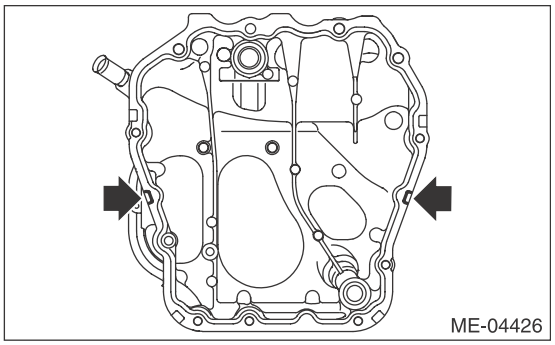
ME-04426

21) Remove the baffle plate.
22) Remove blow-by pipe assembly (A), blow-by pipe (B), PCV hose assembly (C) and water pipe assembly (D).

NOTE:
To unlock the clamp of the blow-by pipe assembly (A), blow-by pipe (B) and PCV hose assembly (C), pinch the clamp by fitting the cut out in the ST with the protrusion on the clamp as shown in the figure.
ST 18353AA000 CLAMP PLIERS

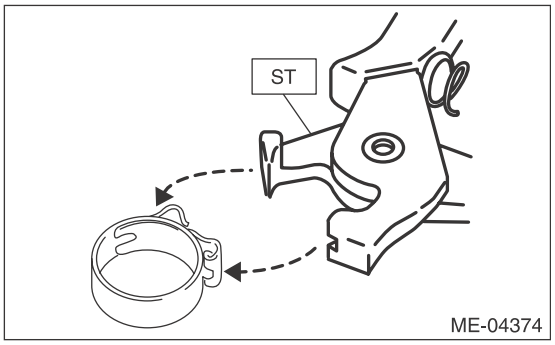

ME-04374

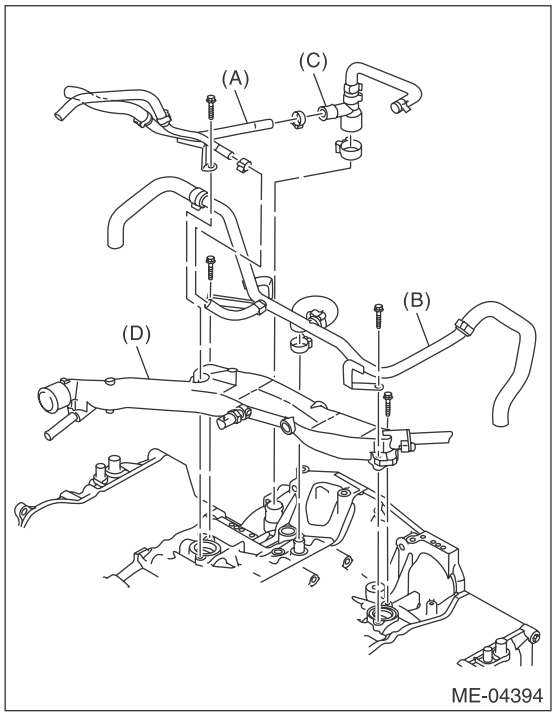

ME-04394

23) Remove the water by-pass pipe.

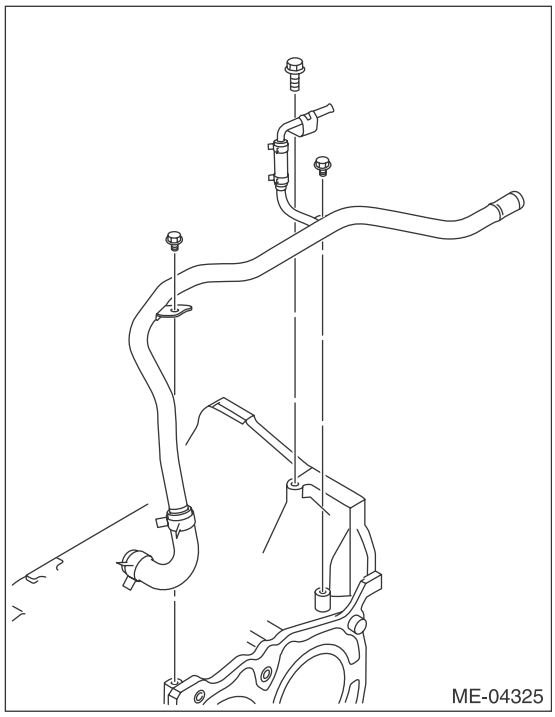

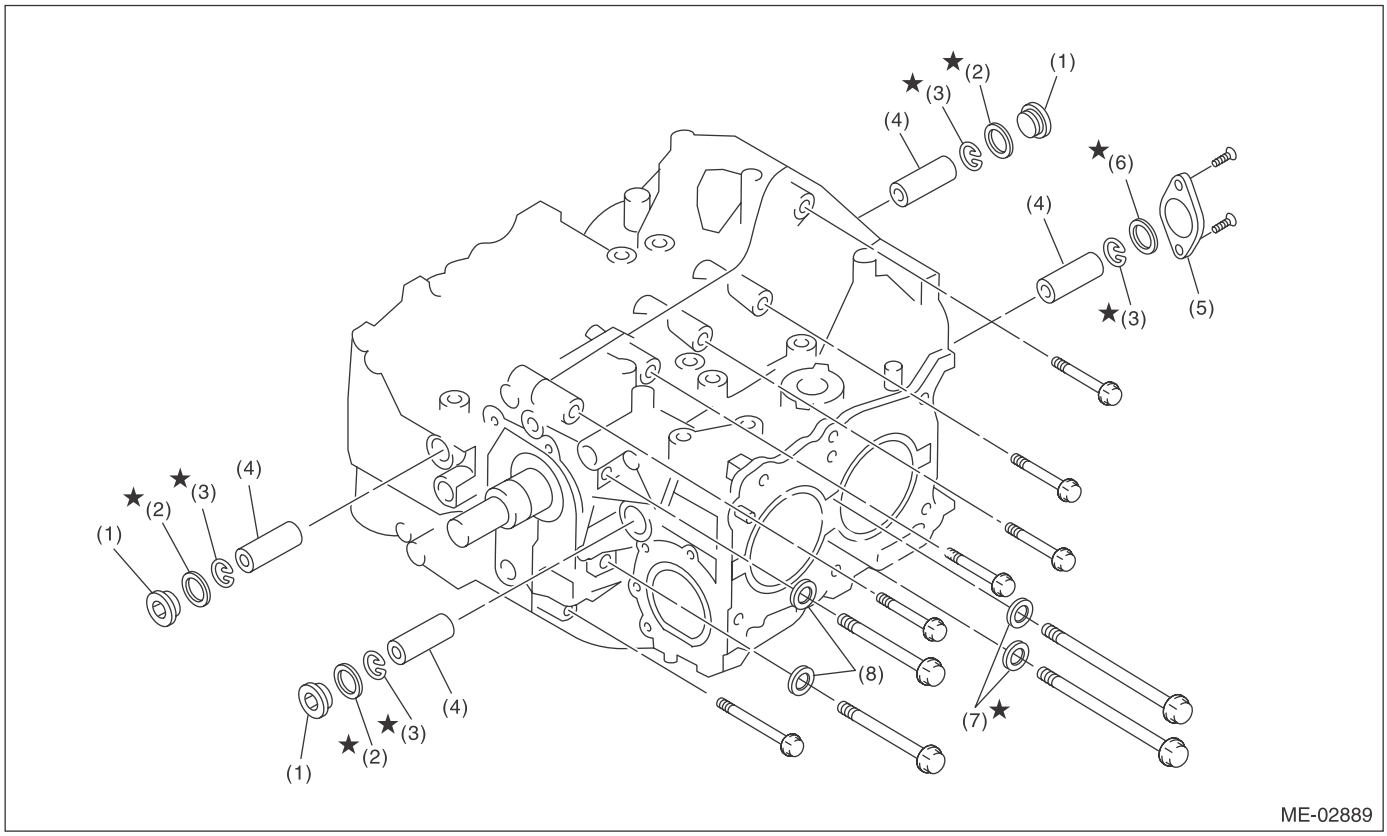

(1) Service hole plug
(2) Gasket
(3) Snap ring
(4) Piston pin
(5) Service hole cover
(6) O-ring
(7) Seal washer
(8) Washer

24) Remove the service hole plugs using a hexagon wrench [14 mm].

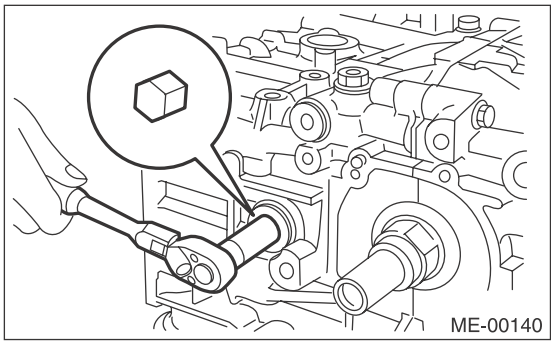

25) Remove the service hole cover.
26) Rotate the crankshaft to bring #1 and #2 pistons to bottom dead center position, then remove the piston snap ring through service hole of #1 and #2 cylinders.

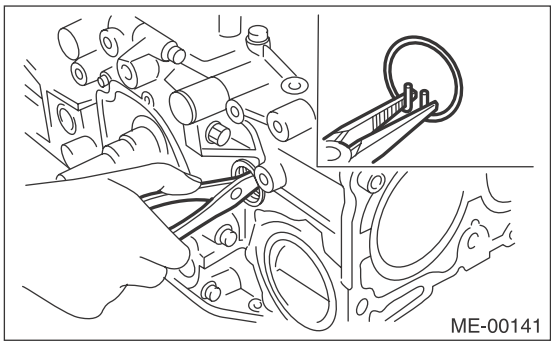

27) Draw out the piston pin from #1 and #2 pistons using ST.

ST	499097700	PISTON PIN REMOVER ASSY

NOTE:
Be careful not to confuse the original combination of piston, piston pin and cylinder.

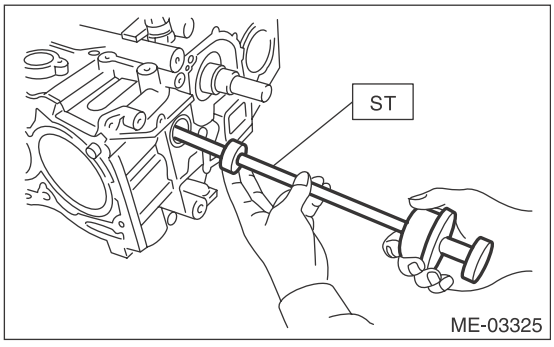

28) Similarly remove the piston pins from #3 and #4 pistons.
29) Remove the cylinder block connecting bolt on the RH side.
30) Loosen the cylinder block connecting bolt on the LH side by 2 to 3 turns.
31) Set the part so that the cylinder block LH is on the upper side, and remove the cylinder block connecting bolt.

32) Separate cylinder block LH and RH.

NOTE:
When separating the cylinder block, do not allow the connecting rod to fall or damage the cylinder block.

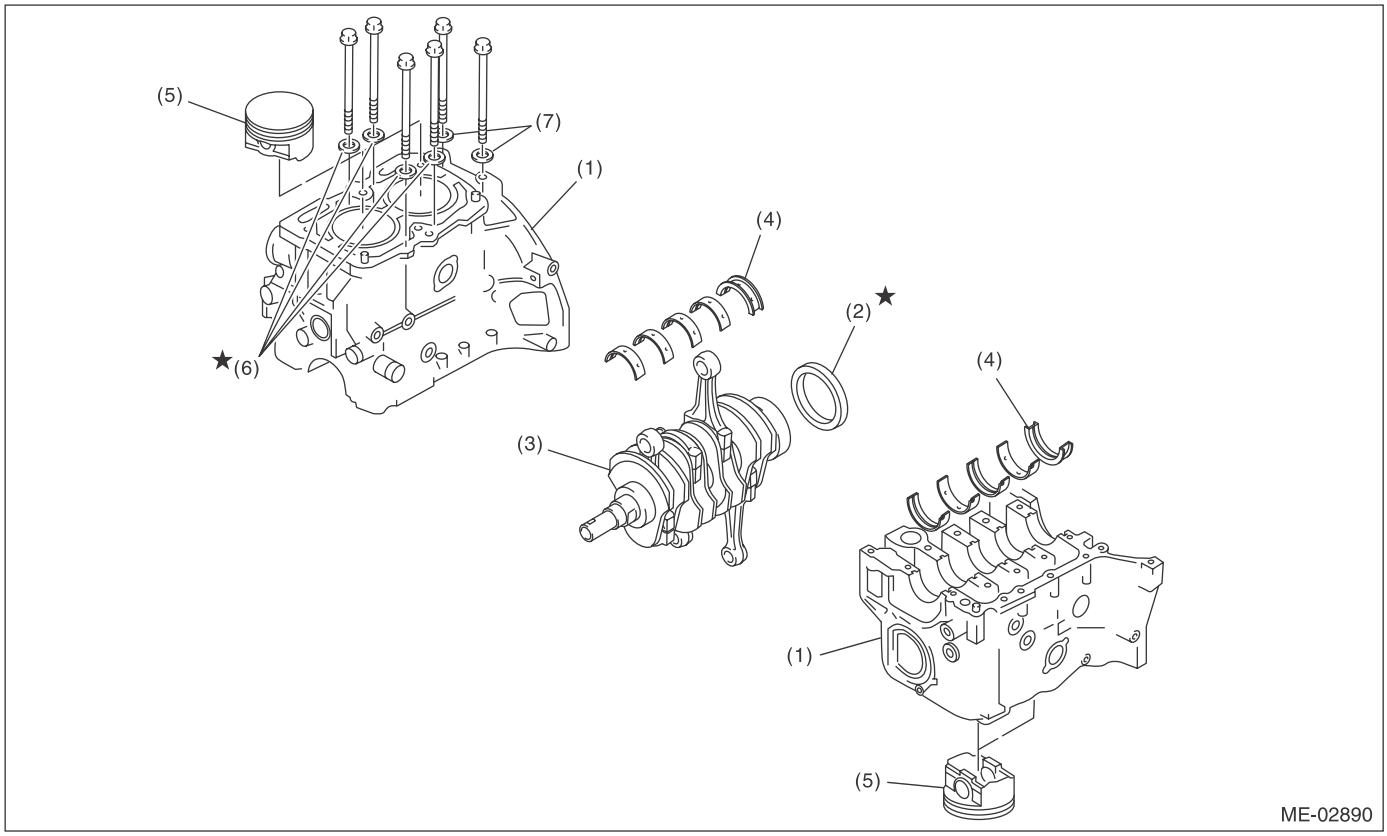

(1)	Cylinder block	(4)	Crankshaft bearing	(7)	Washer
(2)	Rear oil seal	(5)	Piston		
(3)	Crankshaft	(6)	Seal washer		

33) Remove the rear oil seal.
34) Remove the crankshaft together with connecting rod.
35) Remove the crankshaft bearings from cylinder block using a hammer handle.

NOTE:
• Press the crankshaft bearing at the end opposite to locking lip to remove.
• Be careful not to confuse the crankshaft bearing combination.

36) Remove each piston from the cylinder block using a wooden bar or hammer handle.

NOTE:
Be careful not to confuse the original combination of piston and cylinder.

B: INSTALLATION

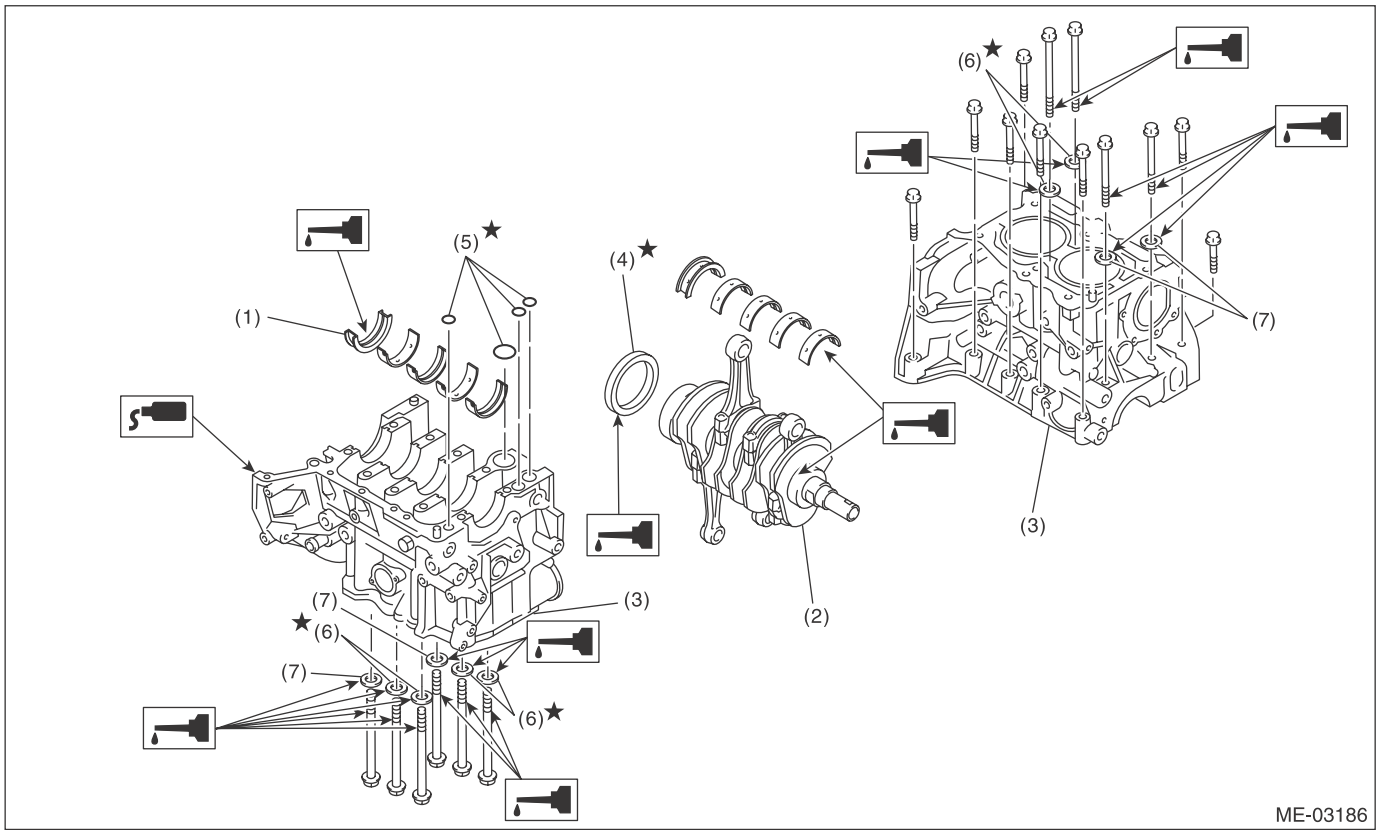

(1) Crankshaft bearing
(2) Crankshaft
(3) Cylinder block
(4) Rear oil seal
(5) O-ring
(6) Seal washer
(7) Washer

1) Remove oil on the mating surface of cylinder block before installation. Apply a coat of engine oil to the bearing and crankshaft journal.
2) Position the crankshaft and O-ring on cylinder block RH.

NOTE:
Use new O-rings.

3) Apply liquid gasket to the mating surfaces of cylinder block RH, and position cylinder block LH.

NOTE:
- Install within 5 min. after applying liquid gasket.
- Do not allow liquid gasket to jut into O-ring grooves, oil passages, bearing grooves, etc.

Liquid gasket:
THREE BOND 1217G (Part No. K0877Y0100) or equivalent

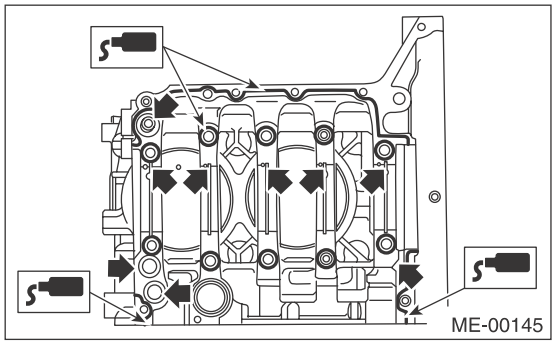

4) Apply a coat of engine oil to the washer and bolt thread.

NOTE:
Use a new seal washer.

5) Tighten the 10 mm cylinder block connecting bolts on the LH side (A — D) in alphabetical order.

Tightening torque:
10 N·m (1.0 kgf-m, 7.4 ft-lb)

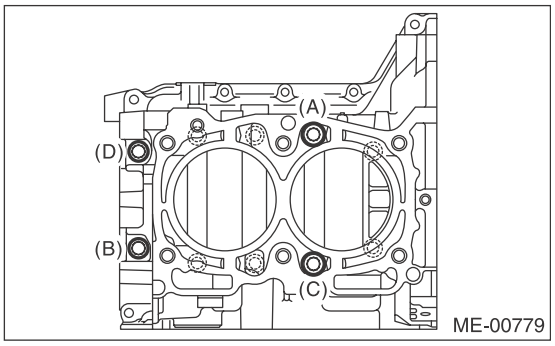

6) Tighten the 10 mm cylinder block connecting bolts on RH side (E — J) in alphabetical sequence.

Tightening torque:
10 N·m (1.0 kgf-m, 7.4 ft-lb)

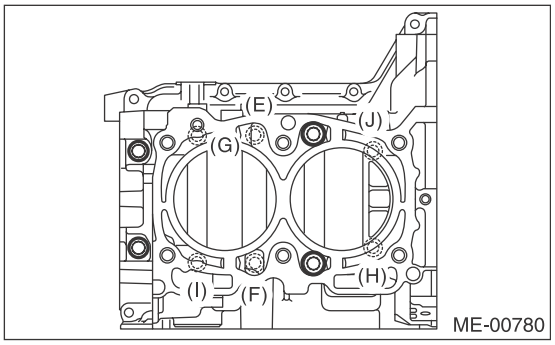

7) Tighten the LH side cylinder block connecting bolts (A — D) further in alphabetical order.

Tightening torque:
18 N·m (1.8 kgf-m, 13.3 ft-lb)

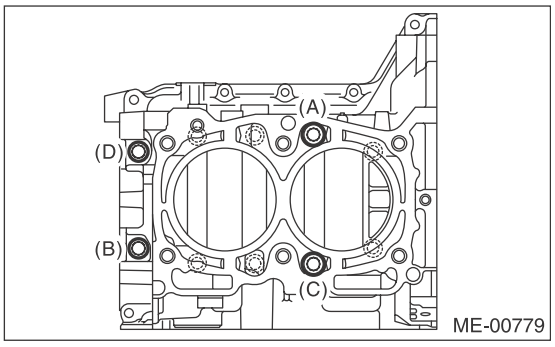

8) Tighten the RH side cylinder block connecting bolts (E — J) further in alphabetical order.

Tightening torque:
18 N·m (1.8 kgf-m, 13.3 ft-lb)

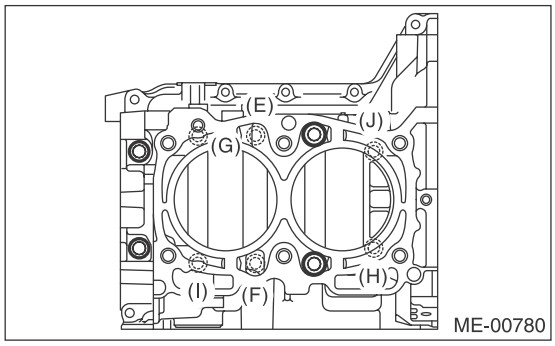

9) Tighten the LH side cylinder block connecting bolts (A — D) further in alphabetical order.

- (A), (C): Angle tightening

Tightening angle:
90°

- (B), (D): Torque tightening

Tightening torque:
40 N·m (4.1 kgf-m, 29.5 ft-lb)

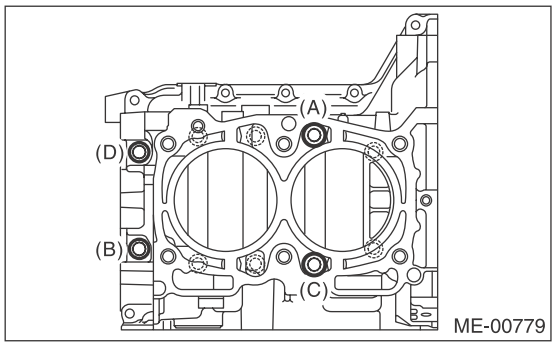

10) Tighten the RH side cylinder block connecting bolts (E — J) further in alphabetical order.

Tightening angle:
90°

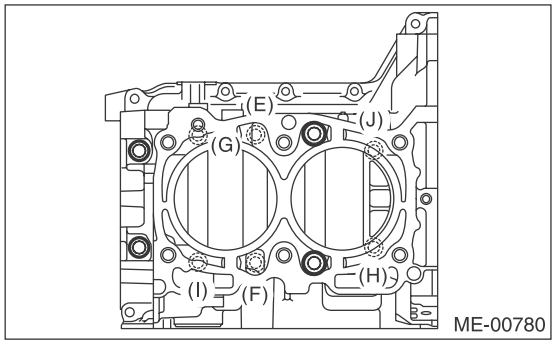

11) Tighten the 8 mm and 6 mm cylinder block connecting bolts on the LH side (A — H) in alphabetical order.

Tightening torque:
(A) — (G): 25 N·m (2.5 kgf-m, 18.4 ft-lb)
(H): 6.4 N·m (0.7 kgf-m, 4.7 ft-lb)

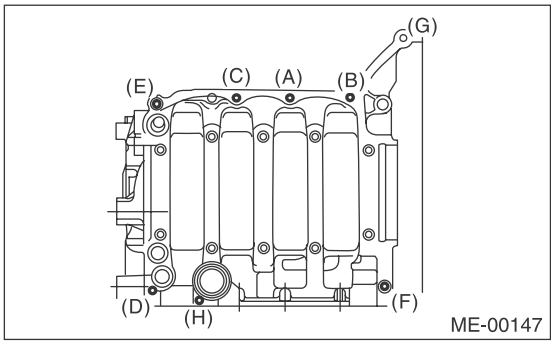

12) Apply a coat of engine oil to the oil seal periphery and install the rear oil seal using ST1 and ST2.

NOTE:
Use a new rear oil seal.

ST1	499597100	CRANKSHAFT OIL SEAL GUIDE
ST2	499587200	CRANKSHAFT OIL SEAL INSTALLER

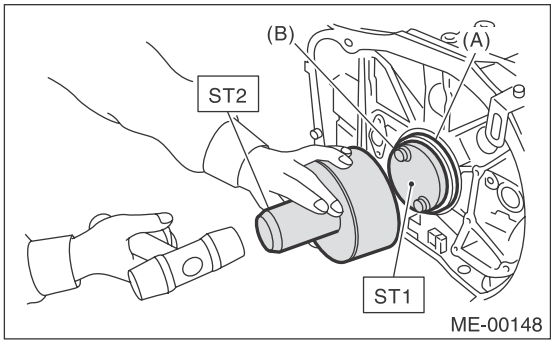

(A) Rear oil seal
(B) Flywheel attachment bolt

13) Position the top ring gap at (A) or (B) in the figure.
14) Position the second ring gap at 180° on the reverse side the top ring gap.

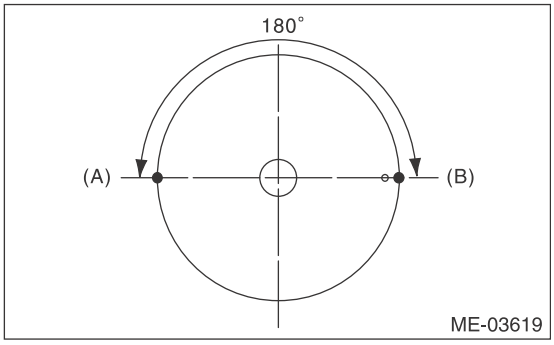

15) Position the upper rail gap at (C) in the figure.

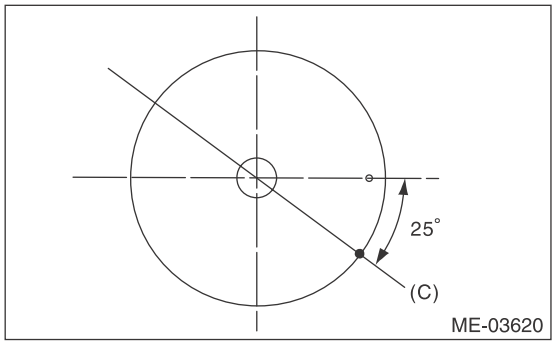

16) Align the upper rail spin stopper (E) to the side hole (D) on the piston.

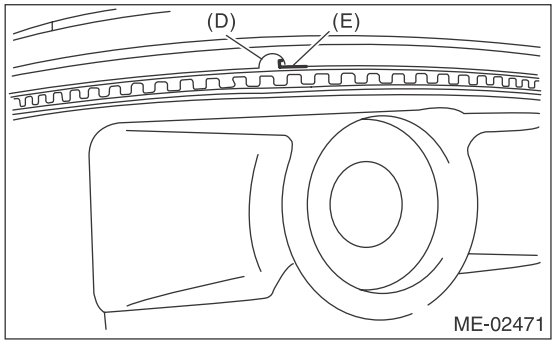

17) Position the expander gap at (F) in the figure on the 180° opposite direction of (C).

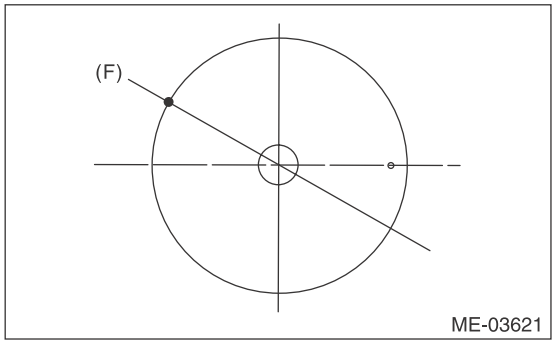

18) Set the lower rail gap at position (G), located 120° clockwise from (C).

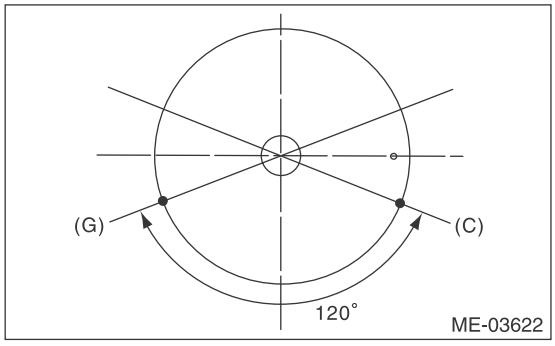

NOTE:
• Make sure ring gaps do not face the same direction.
• Make sure ring gaps are not within the piston skirt area.

19) Install the snap ring.
Before positioning the piston on the cylinder block, attach the snap ring in the service hole of the cylinder block and the piston hole on the opposite side.

NOTE:
Use new snap rings.

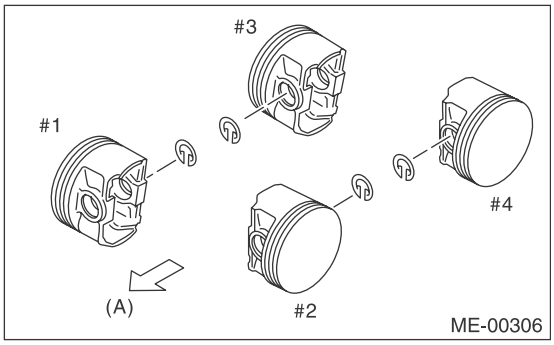

(A) Front side

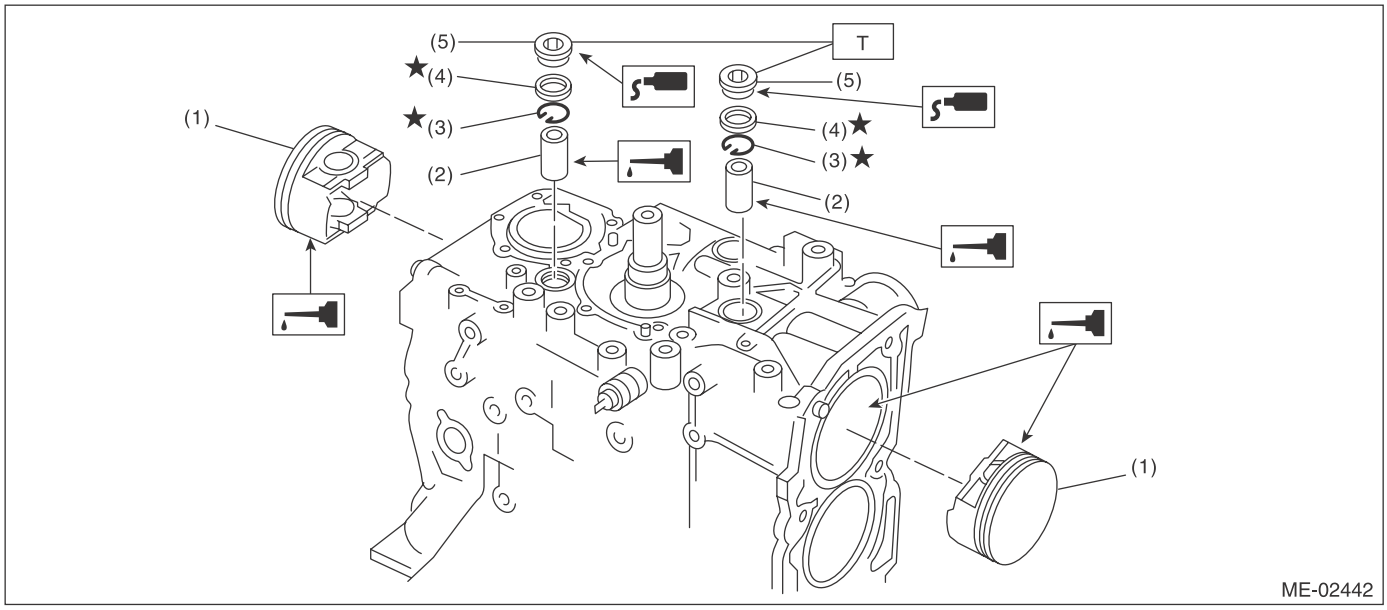

(1) Piston
(2) Piston pin
(3) Snap ring
(4) Gasket
(5) Service hole plug

Tightening torque:N·m (kgf-m, ft-lb)
T: 70 (7.1, 51.6)

20) Install the piston.
(1) Set the parts so that the #1 and #2 cylinders are on the upper side.
(2) Using the ST1, turn the crankshaft so that #1 and #2 connecting rods are set at bottom dead center.

ST1 499987500 CRANKSHAFT SOCKET

(3) Apply a coat of engine oil to the pistons and cylinders and insert pistons in their cylinders using ST2.

ST2 498747300 PISTON GUIDE

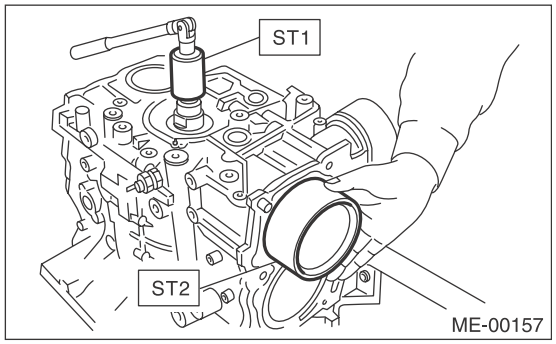

NOTE:
Face the piston front mark towards the front of the engine.

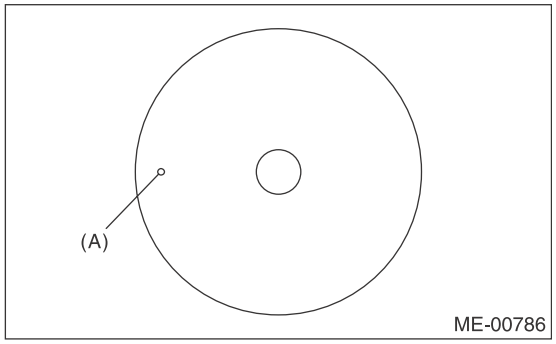

(A) Front mark

21) Install the piston pin.
(1) Apply a thin coat of engine oil to ST3.
(2) Insert ST3 into the service hole to align the piston pin hole and the connecting rod small end.

ST3 499017100 PISTON PIN GUIDE

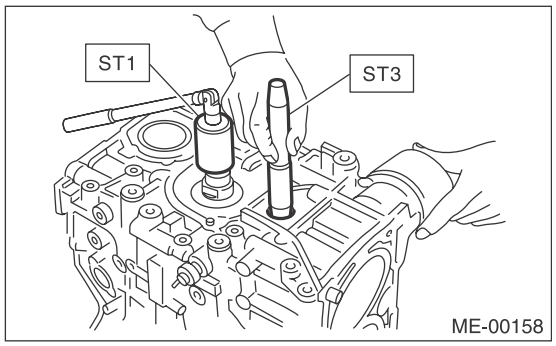

(3) Apply a thin coat of engine oil to piston pin, and insert the piston pin into piston and connecting rod through service hole.
(4) Install the snap ring.

NOTE:
Use new snap rings.

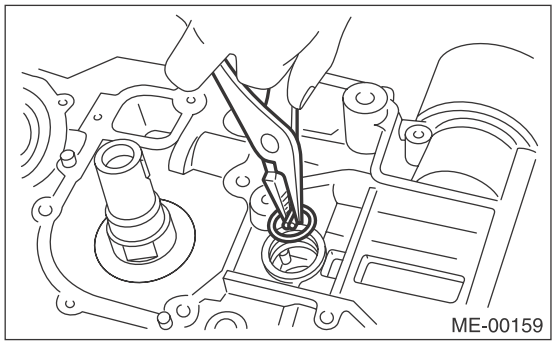

(5) Apply liquid gasket to the threaded portion of the service hole plug.

Liquid gasket:
THREE BOND 1105 (Part No. 004403010) or equivalent

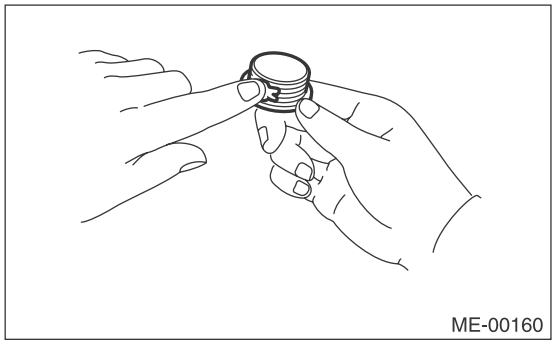

(6) Install the service hole plug and gasket.

NOTE:
Use a new gasket.

Tightening torque:
70 N·m (7.1 kgf-m, 51.6 ft-lb)

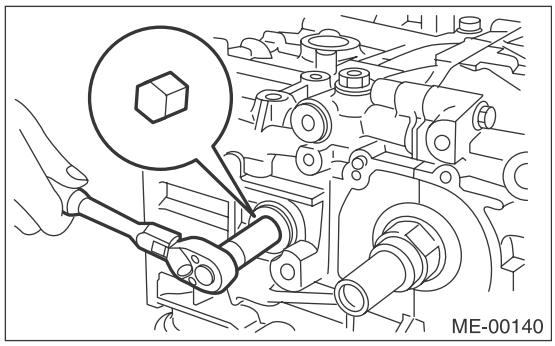

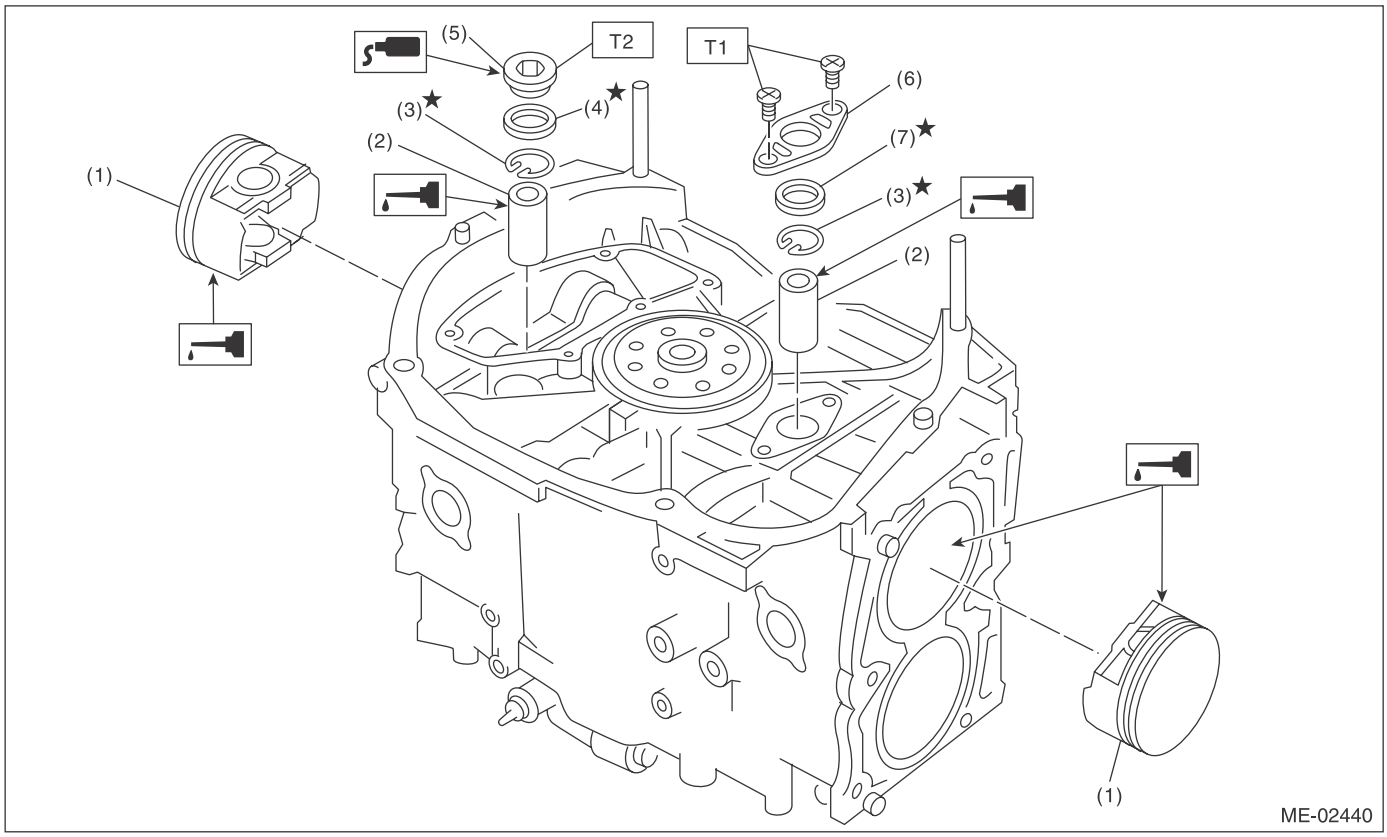

(1)	Piston	(5)	Service hole plug	***Tightening torque:N·m (kgf-m, ft-lb)***	
(2)	Piston pin	(6)	Service hole cover	***T1:***	***6.4 (0.7, 4.7)***
(3)	Snap ring	(7)	O-ring	***T2:***	***70 (7.1, 51.6)***
(4)	Gasket				

(7) Set the parts so that the #3 and #4 cylinders are on the upper side. Following the same procedures as used for #1 and #2 cylinders, install the pistons and piston pins.
(8) Install the service hole cover.

NOTE:
Use new O-rings.

Tightening torque:
6.4 N·m (0.7 kgf-m, 4.7 ft-lb)

22) Install the water by-pass pipe.

Tightening torque:
T1: 6.4 N·m (0.7 kgf-m, 4.7 ft-lb)
T2: 16 N·m (1.6 kgf-m, 11.8 ft-lb)

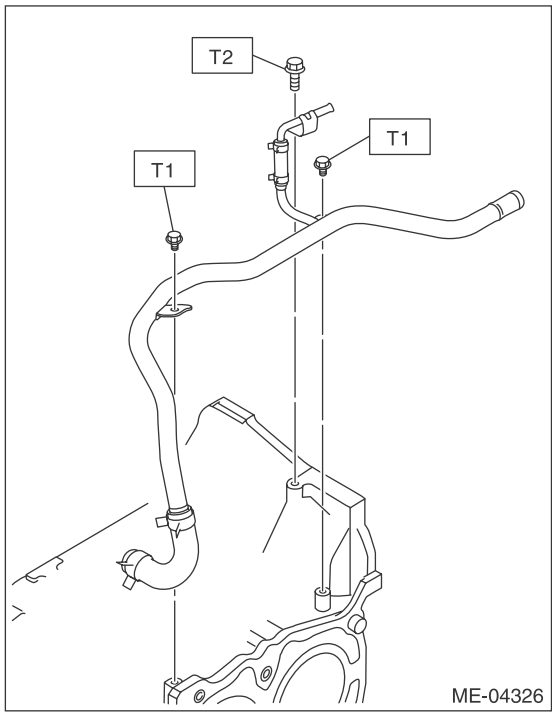

23) Install blow-by pipe assembly (A), blow-by pipe (B), PCV hose assembly (C) and water pipe assembly (D).

NOTE:
For the blow-by pipe assembly (A), blow-by pipe (B) and PCV hose assembly (C), use a new clamp, fit the cut out in the ST with the protrusion on the clamp as shown in the figure, and lock the clamp.
ST 18353AA000 CLAMP PLIERS

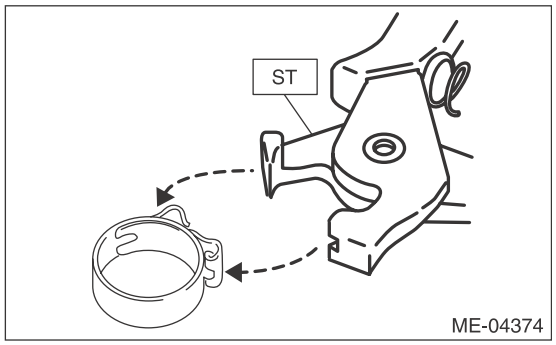

Tightening torque:
6.5 N·m (0.7 kgf-m, 4.8 ft-lb)

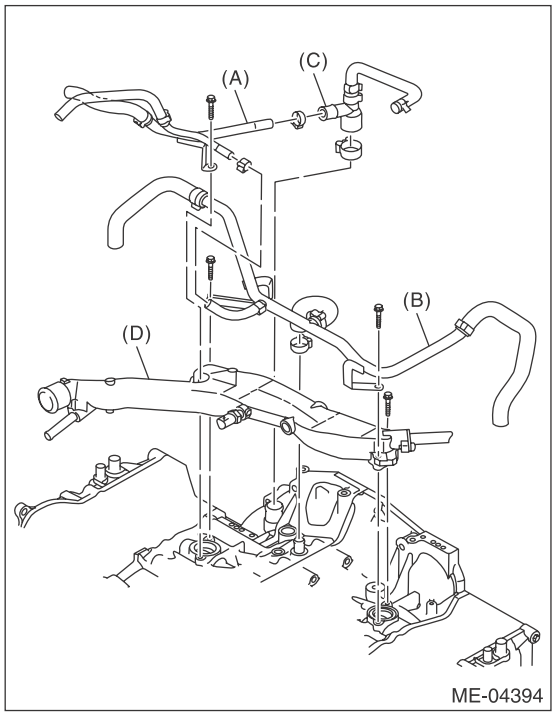

24) Install the baffle plate.

NOTE:
- Use a new seal.
- Make sure that the seals (A) are installed securely on the baffle plate in a direction as shown in the figure below.

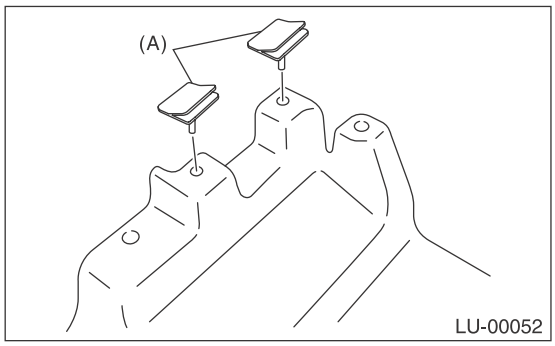

Tightening torque:
6.4 N·m (0.7 kgf-m, 4.7 ft-lb)

25) Apply liquid gasket to the mating surfaces of cylinder block lower, and install the cylinder block lower.

CAUTION:
Be careful not to apply any liquid gasket to the O-ring attachment section.

NOTE:
- Use new O-rings.
- Before installing the cylinder block lower, clean the mating surface of cylinder block lower and cylinder block.
- Install within 5 min. after applying liquid gasket.

Liquid gasket:
THREE BOND 1217G (Part No. K0877Y0100) or equivalent

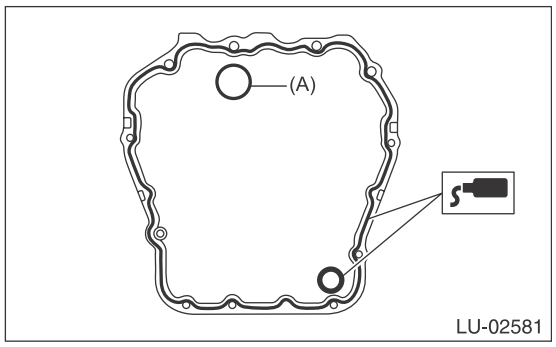

(A) O-ring

Tightening torque:
T1: 6.4 N·m (0.7 kgf-m, 4.7 ft-lb)
T2: 16 N·m (1.6 kgf-m, 11.8 ft-lb)

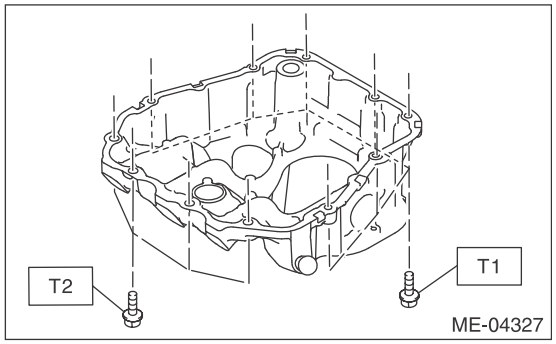

26) Apply liquid gasket to the mating surfaces of oil pan, and install the oil pan.

NOTE:
• Before installing the oil pan, clean the mating surface of oil pan and cylinder block.
• Install within 5 min. after applying liquid gasket.

Liquid gasket:
THREE BOND 1217G (Part No. K0877Y0100) or equivalent

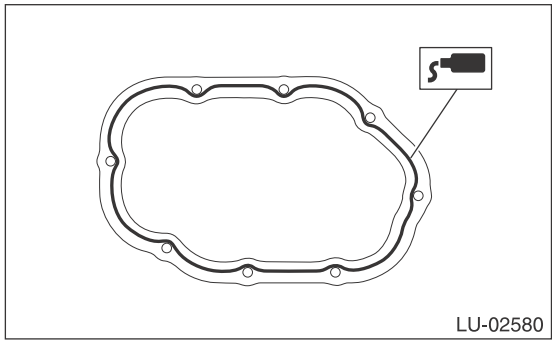

Tightening torque:
5 N·m (0.5 kgf-m, 3.7 ft-lb)

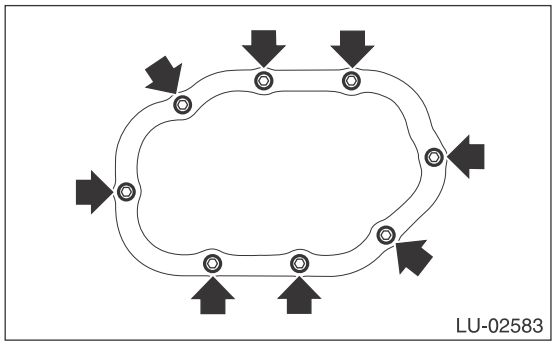

27) Secure the oil level switch harness to the cylinder block with clip.

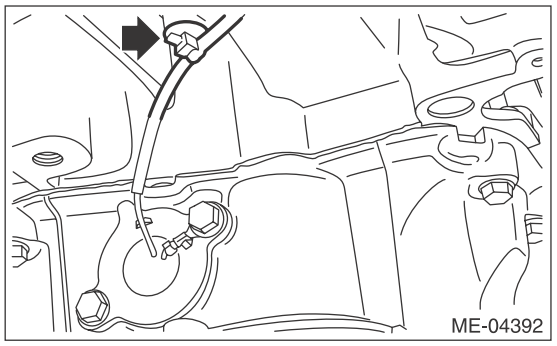

28) Apply liquid gasket to the mating surface of oil separator cover and the threaded portion of bolt (A) shown in the figure (when reusing the bolt), and then install the oil separator cover.

NOTE:
• Install within 5 min. after applying liquid gasket.
• Use new oil separator cover.

Liquid gasket:
Mating surface
THREE BOND 1217G (Part No. K0877Y0100) or equivalent
Bolt thread (A) (when reusing the bolt)
THREE BOND 1324 (Part No. 004403042) or equivalent

Tightening torque:
6.4 N·m (0.65 kgf-m, 4.7 ft-lb)

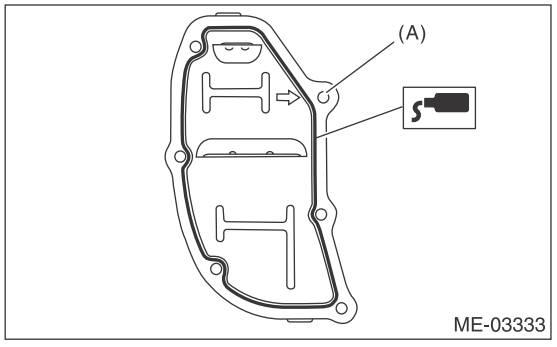

29) Install the flywheel. <Ref. to CL-14, INSTALLATION, Flywheel.>

30) Install the clutch disc and cover. <Ref. to CL-11, INSTALLATION, Clutch Disc and Cover.>
31) Install the oil pump.
(1) Using the ST, install the front oil seal.
ST 499587100 OIL SEAL INSTALLER

NOTE:
Use a new front oil seal.

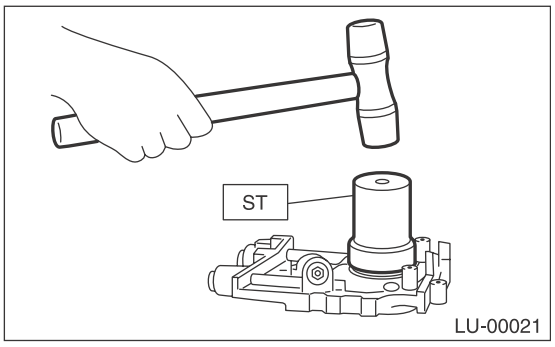

(2) Apply liquid gasket to the mating surfaces of oil pump.

NOTE:
Install within 5 min. after applying liquid gasket.

Liquid gasket:
THREE BOND 1217G (Part No. K0877Y0100) or equivalent

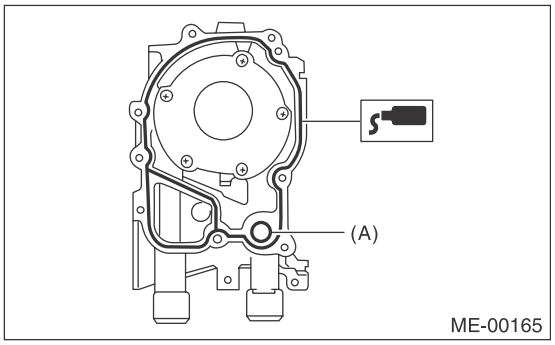

(A) O-ring

(3) Apply a thin coat of engine oil to the inside of front oil seal.

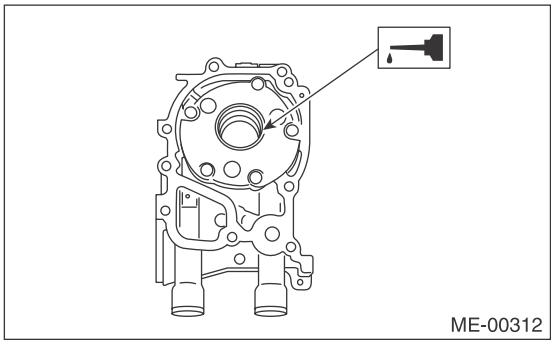

(4) Install the oil pump to cylinder block.

CAUTION:
• Be careful not to damage the front oil seal during installation.
• Make sure the front oil seal lip is not folded.

NOTE:
• Align the flat surface of oil pump's inner rotor with flat surface of crankshaft before installation.
• Use new O-rings.
• Do not forget to assemble O-rings.

(5) Apply liquid gasket to the three bolts thread shown in figure. (when reusing bolts)

Liquid gasket:
THREE BOND 1324 (Part No. 004403042) or equivalent

Tightening torque:
6.4 N·m (0.7 kgf-m, 4.7 ft-lb)

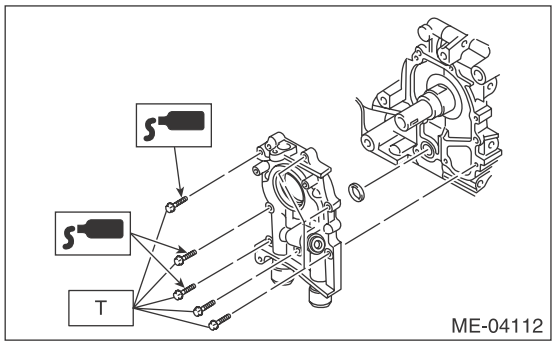

32) Install the water pump and gasket.

NOTE:
• When installing the water pump, tighten bolts in two stages in alphabetical order as shown in the figure.
• Use a new gasket.
• Use new water pump sealing.

Tightening torque:
First:
12 N·m (1.2 kgf-m, 8.9 ft-lb)
Second:
12 N·m (1.2 kgf-m, 8.9 ft-lb)

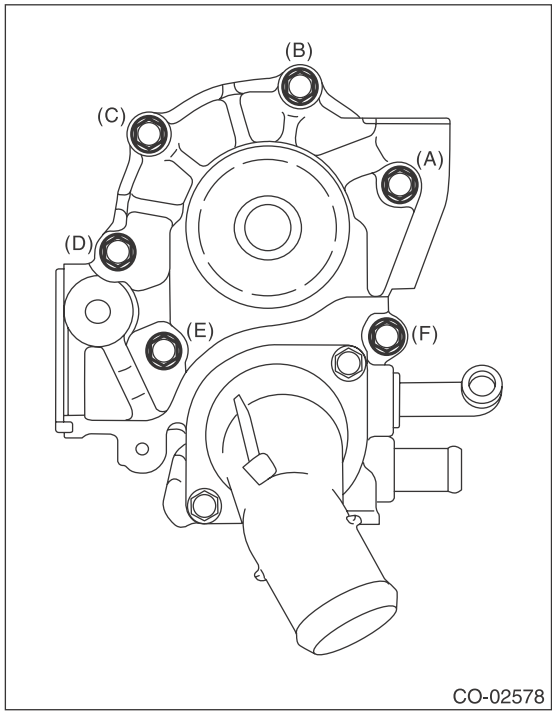

33) Install the hose to water pump.
34) Install the oil cooler. (MT model) <Ref. to LU(H4SO)-26, INSTALLATION, Engine Oil Cooler.>
35) Install the oil filter. <Ref. to LU(H4SO)-34, INSTALLATION, Engine Oil Filter.>
36) Install the cylinder head. <Ref. to ME(H4DOTC)-73, INSTALLATION, Cylinder Head.>
37) Install the camshaft. <Ref. to ME(H4DOTC)-65, INSTALLATION, Camshaft.>
38) Install the A/C compressor together with the bracket.

Tightening torque:
36 N·m (3.7 kgf-m, 26.6 ft-lb)
39) Install the crank sprocket. <Ref. to ME(H4DOTC)-61, INSTALLATION, Crank Sprocket.>
40) Install the cam sprocket. <Ref. to ME(H4DOTC)-60, INSTALLATION, Cam Sprocket.>
41) Install the timing belt. <Ref. to ME(H4DOTC)-53, INSTALLATION, Timing Belt.>
42) Adjust the valve clearance. <Ref. to ME(H4DOTC)-29, ADJUSTMENT, Valve Clearance.>
43) Install the rocker cover.
(1) Install the rocker cover gasket to the rocker cover. (Outer periphery and ignition coil section)

NOTE:
Use a new rocker cover gasket.

(2) Apply liquid gasket to the specified point of the cylinder head.

NOTE:
Install within 5 min. after applying liquid gasket.

Liquid gasket:
THREE BOND 1217G (Part No. K0877Y0100) or equivalent

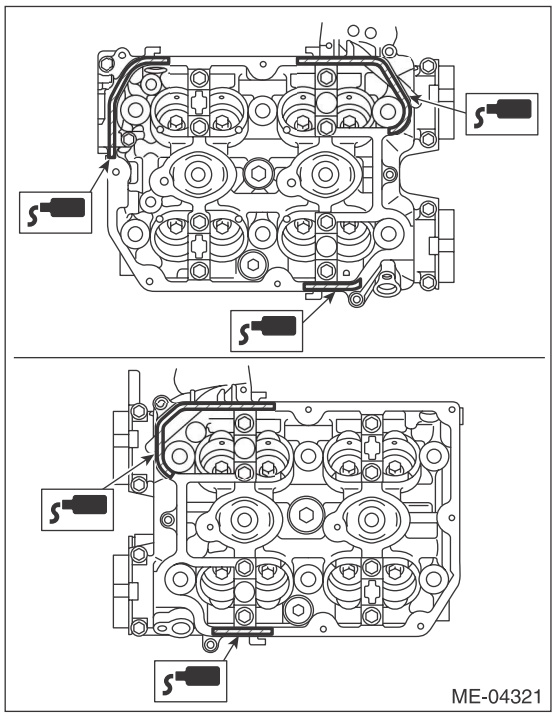

(3) Install the rocker cover to cylinder head. Ensure the gasket is properly positioned during installation.
(4) Temporarily tighten the rocker cover bolts in alphabetical order shown in the figure, and then tighten to specified torque in alphabetical order.

Tightening torque:
6.4 N·m (0.7 kgf-m, 4.7 ft-lb)

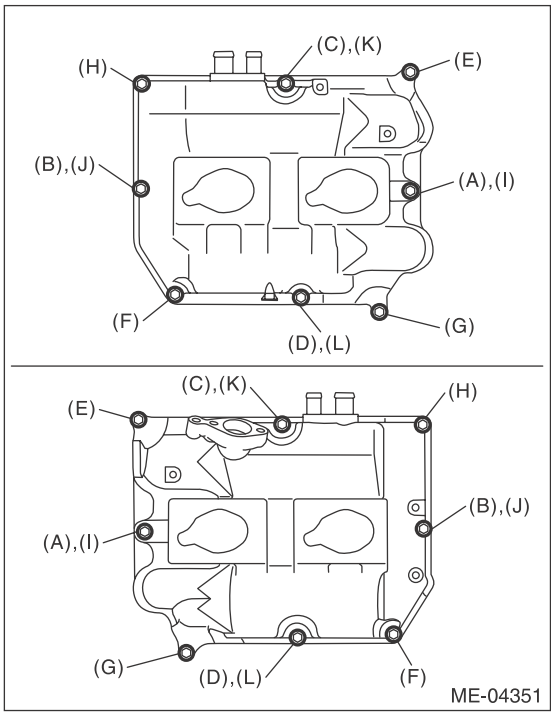

44) Connect the PCV hose to the rocker cover.
45) Install the timing belt cover. <Ref. to ME(H4DOTC)-49, INSTALLATION, Timing Belt Cover.>
46) Install the crank pulley. <Ref. to ME(H4DOTC)-44, INSTALLATION, Crank Pulley.>
47) Install the intake manifold. <Ref. to FU(H4DOTC)-21, INSTALLATION, Intake Manifold.>

C: DISASSEMBLY

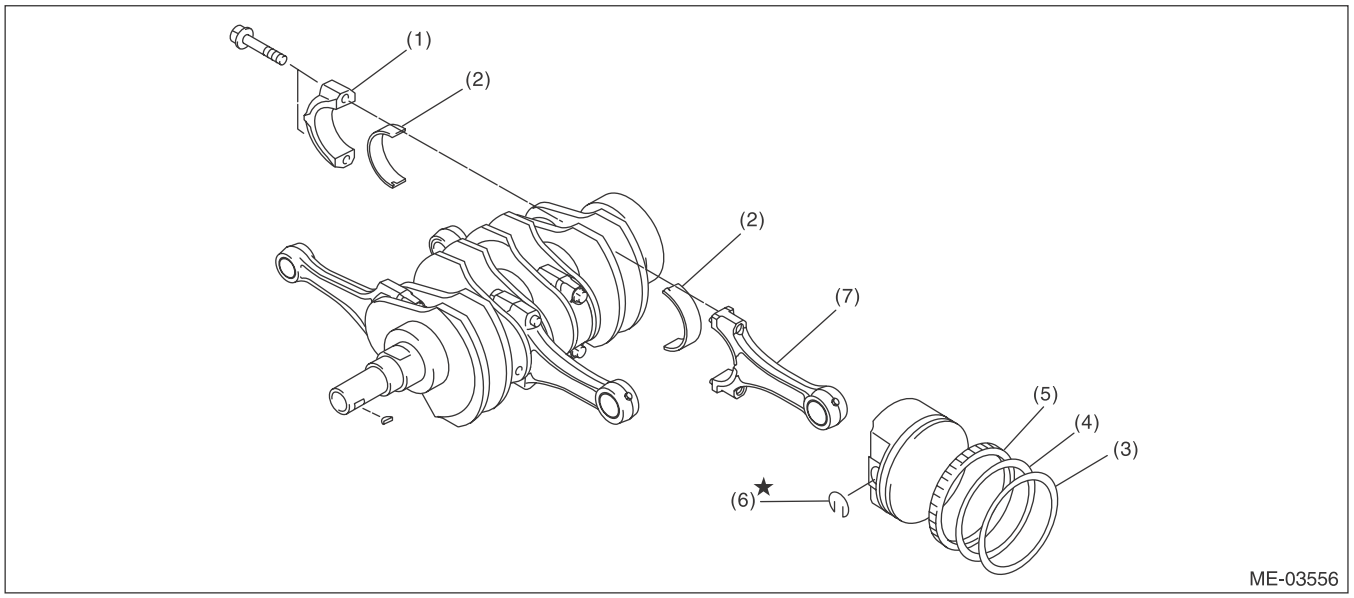

(1) Connecting rod cap
(2) Connecting rod bearing
(3) Top ring
(4) Second ring
(5) Oil ring
(6) Snap ring
(7) Connecting rod

1) Remove the connecting rod cap.
2) Remove the connecting rod bearing.

NOTE:
Keep the removed connecting rods, connecting rod caps and bearings in order so that they are kept in their original combinations/groups, and not mixed together.

3) Remove the piston rings using piston ring expander.
4) Remove the oil ring by hand.

NOTE:
Arrange the removed piston rings in proper order, to prevent confusion.

5) Remove the snap ring.

D: ASSEMBLY

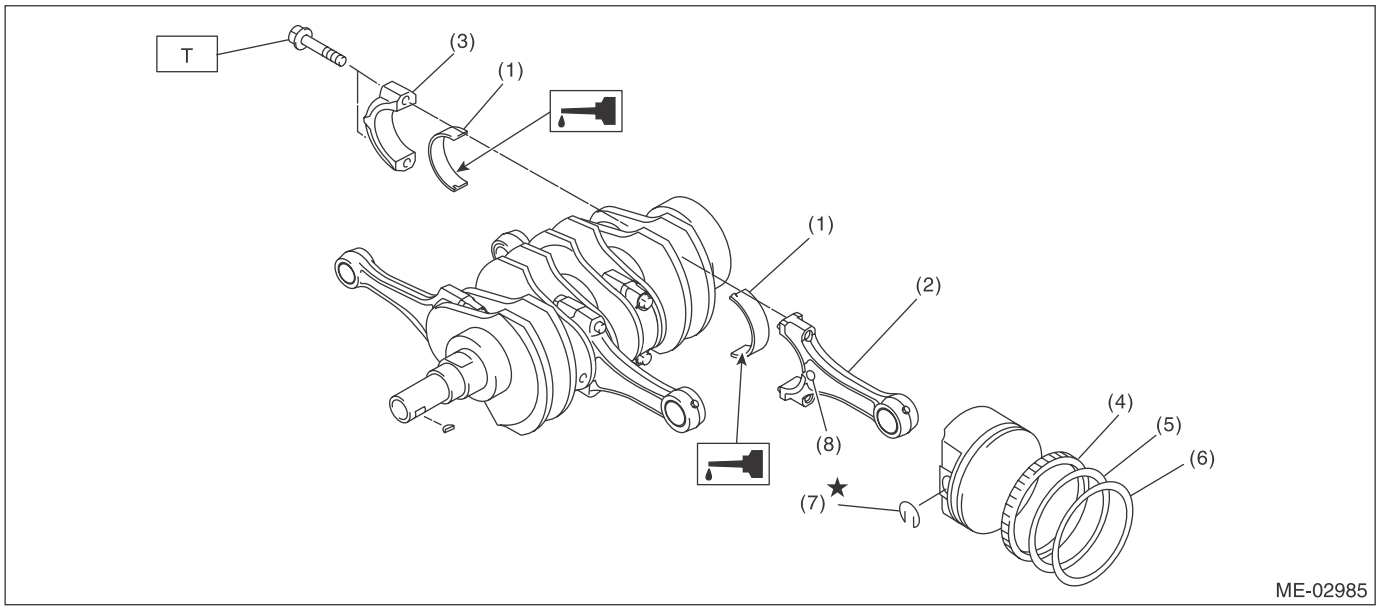

(1)	Connecting rod bearing	(5)	Second ring
(2)	Connecting rod	(6)	Top ring
(3)	Connecting rod cap	(7)	Snap ring
(4)	Oil ring	(8)	Side mark

Tightening torque:N·m (kgf-m, ft-lb)
T: 52 (5.3, 38.4)

1) Apply engine oil to the surface of the connecting rod bearings, and install the connecting rod bearings onto connecting rods and connecting rod caps.
2) Position each connecting rod with the side with a side mark facing forward, and install it.
3) Attach the connecting rod cap, and tighten with the connecting rod bolt. Make sure the arrow on connecting rod cap faces the front during installation.

NOTE:
• Each connecting rod has its own mating cap. Make sure that they are assembled correctly by checking their matching number.
• When tightening the connecting rod bolts, apply oil on the threads.

Tightening torque:
52 N·m (5.3 kgf-m, 38.4 ft-lb)
4) Install the oil ring upper rail, expander and lower rail by hand.
5) Install the second ring and top ring using piston ring expander.

NOTE:
Assemble so that the piston ring mark “R” faces the top side of the piston.

E: INSPECTION

1. CYLINDER BLOCK

1) Check for cracks or damage. Use liquid penetrant tester on the important sections to check for fissures. Check that there are no marks of gas leaking or water leaking on gasket installing surface.
2) Check the oil passages for clogging.
3) Inspect the cylinder block surface that mates with cylinder head for warping by using a straight edge, and correct by grinding if necessary.

Warping limit:
0.025 mm (0.00098 in)

Grinding limit:
0.1 mm (0.004 in)

Standard height of cylinder block:
201.0 mm (7.91 in)

2. CYLINDER AND PISTON

1) The cylinder bore size is stamped on the front upper face of the cylinder block.

NOTE:
• Measurement should be performed at a temperature of 20°C (68°F).
• Standard sized pistons are classified into two grades, “A” and “B”. These grades should be used as guide lines in selecting a standard piston.

Standard diameter:
A: 99.505 — 99.515 mm (3.9175 — 3.9179 in)
B: 99.495 — 99.505 mm (3.9171 — 3.9175 in)

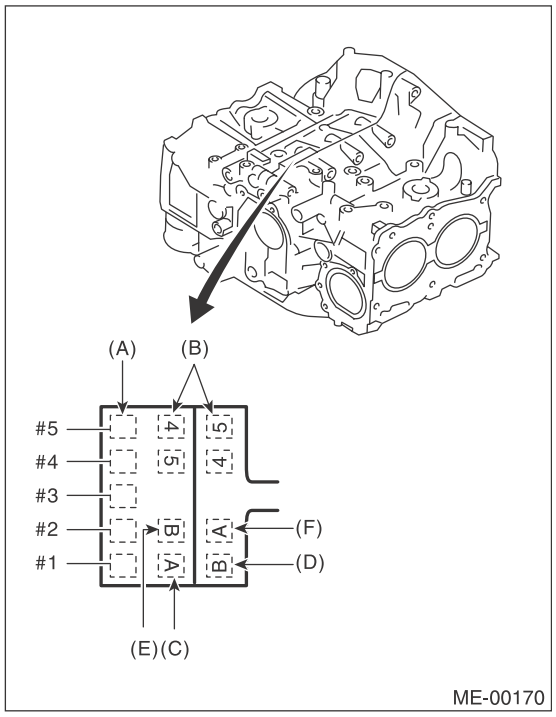

(A) Main journal size mark
(B) Cylinder block (RH) – (LH) combination mark
(C) #1 cylinder bore size mark
(D) #2 cylinder bore size mark
(E) #3 cylinder bore size mark
(F) #4 cylinder bore size mark

2) Measure inner diameter of each cylinder.
Measure the inner diameter of each cylinder in both the thrust and piston pin directions at the heights as shown in the figure, using a cylinder bore gauge.

NOTE:
Measurement should be performed at a temperature of 20°C (68°F).

Taper:
Standard
0.015 mm (0.0006 in)

Out-of-roundness:
Standard
0.010 mm (0.0004 in)

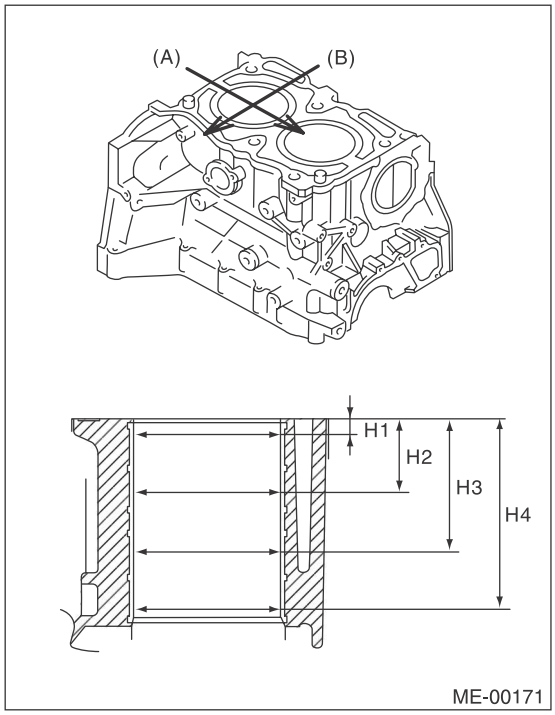

(A) Piston pin direction
(B) Thrust direction
H1: 10 mm (0.39 in)
H2: 45 mm (1.77 in)
H3: 80 mm (3.15 in)
H4: 115 mm (4.53 in)

3) When the piston is to be replaced due to general or cylinder wear, select a suitable sized piston by measuring the piston clearance.
4) Measure outer diameter of each piston.
Measure the outer diameter of each piston at the height as shown in the figure. (Thrust direction)

NOTE:
Measurement should be performed at a temperature of 20°C (68°F).

Piston grade point H:
38.2 mm (1.50 in)

Piston outer diameter:

Standard
A: 99.505 — 99.515 mm (3.9175 — 3.9179 in)
B: 99.495 — 99.505 mm (3.9171 — 3.9175 in)
0.25 mm (0.0098 in) oversize
99.745 — 99.765 mm (3.9270 — 3.9278 in)
0.50 mm (0.0197 in) oversize
99.995 — 100.015 mm (3.9368 — 3.9376 in)

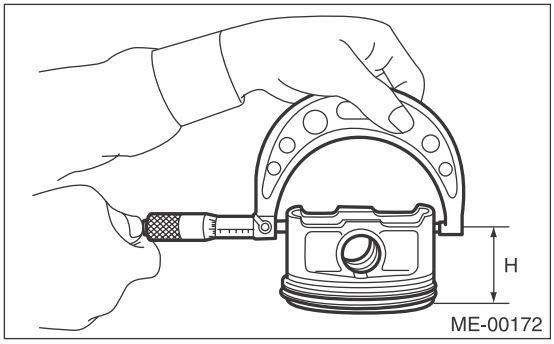

5) Calculate the clearance between cylinder and piston.

NOTE:
Measurement should be performed at a temperature of 20°C (68°F).

Cylinder to piston clearance at 20°C (68°F):
Standard
–0.010 — 0.010 mm (–0.00039 — 0.00039 in)

6) Boring and honing
(1) If any of the measured value of taper, out-of-roundness or cylinder-to-piston clearance is out of standard or if there is any damage on the cylinder wall, rebore it to replace with an oversize piston.

CAUTION:
When any of the cylinders needs reboring, all other cylinders must be bored at the same time, and replaced with oversize pistons.

(2) If the cylinder inner diameter exceeds the limit after boring and honing, replace the cylinder block.

NOTE:
Immediately after reboring, the cylinder diameter may differ from its real diameter due to temperature rise. Thus, when measuring the cylinder diameter, wait until it has cooled to room temperature.

Cylinder inner diameter boring limit (diameter):
To 100.005 mm (3.9372 in)

3. PISTON AND PISTON PIN

1) Check the piston and piston pin for damage, cracks or wear. Replace if faulty.
2) Check the piston ring groove for wear or damage. Replace if faulty.
3) Make sure the piston pin can be inserted into the piston pin hole by a thumb at 20°C (68°F). Replace if faulty.

Clearance between piston pin hole and piston pin:
Standard
0.004 — 0.008 mm (0.0002 — 0.0003 in)

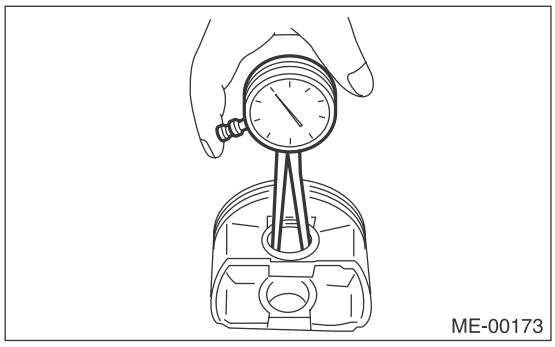

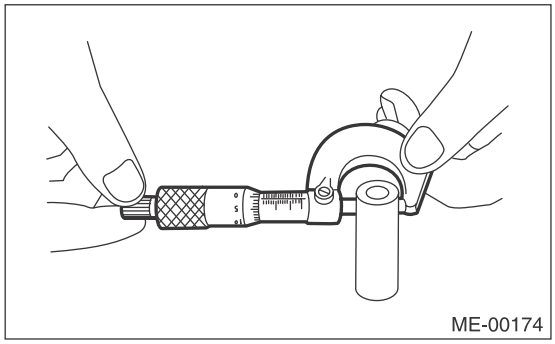

4) Check the snap ring installation groove (A) on the piston for burr. If necessary, remove burr from the groove so that the piston pin can lightly move.

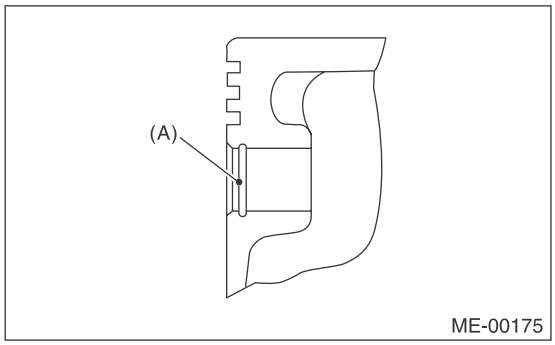

5) Check the piston pin snap ring for distortion, cracks and wear.

4. PISTON RING

1) If the piston ring is broken, damaged or worn, or if its tension is insufficient, or when the piston is replaced, replace the piston ring with a new part of the same size as piston.

NOTE:
• The top ring and second ring have the mark to determine the direction for installing. When attaching the ring to the piston, face these marks towards the top side.
• Oil ring consists of the upper rail, expander and lower rail. When attaching the oil ring to the piston, pay attention to the direction of each rail.

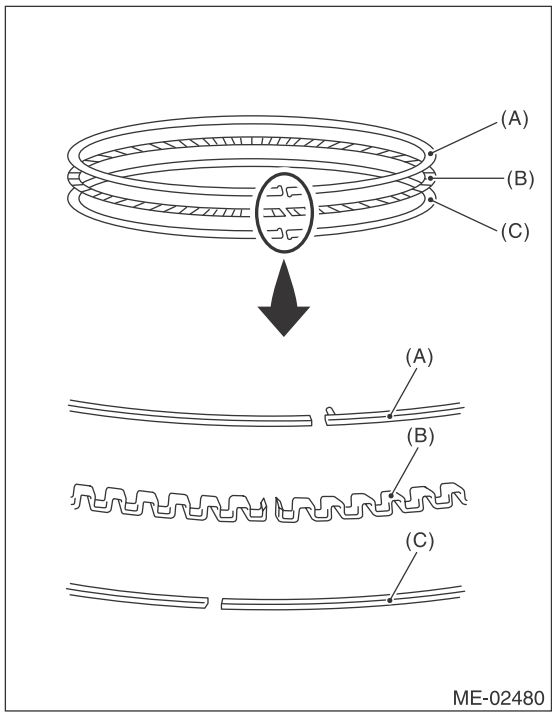

(A) Upper rail
(B) Expander
(C) Lower rail

2) Using the piston, insert the piston ring and oil ring into the cylinder so that they are perpendicular to the cylinder wall, and measure the piston ring gap with a thickness gauge.

		Standard mm (in)
Piston ring gap	Top ring	0.20 — 0.25 (0.0079 — 0.0098)
	Second ring	0.37 — 0.52 (0.015 — 0.020)
	Oil ring rail	0.20 — 0.50 (0.0079 — 0.0197)

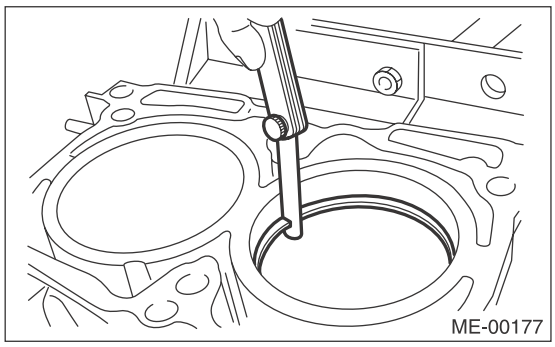

3) Fit the piston ring straight into the piston ring groove, then measure the clearance between piston ring and piston ring groove with a thickness gauge.

NOTE:
Before measuring the clearance, clean the piston ring groove and piston ring.

		Standard mm (in)
Clearance between piston ring and piston ring groove	Top ring	0.040 — 0.080 (0.0016 — 0.0031)
	Second ring	0.030 — 0.070 (0.0012 — 0.0028)

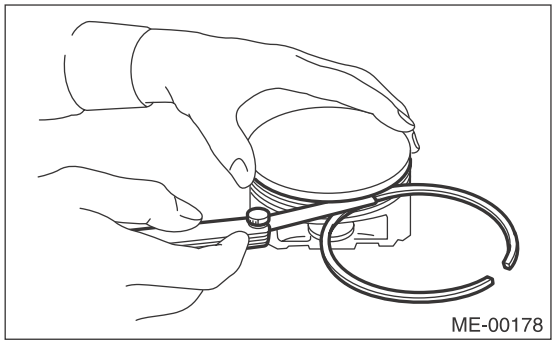

5. CONNECTING ROD

1) Replace the connecting rod, if the large or small end thrust surface is damaged.
2) Check for bend or twist using a connecting rod aligner. Replace the connecting rod if the bend or twist exceeds the limit.

Limit of bend or twist per 100 mm (3.94 in) in length:
0.10 mm (0.0039 in)

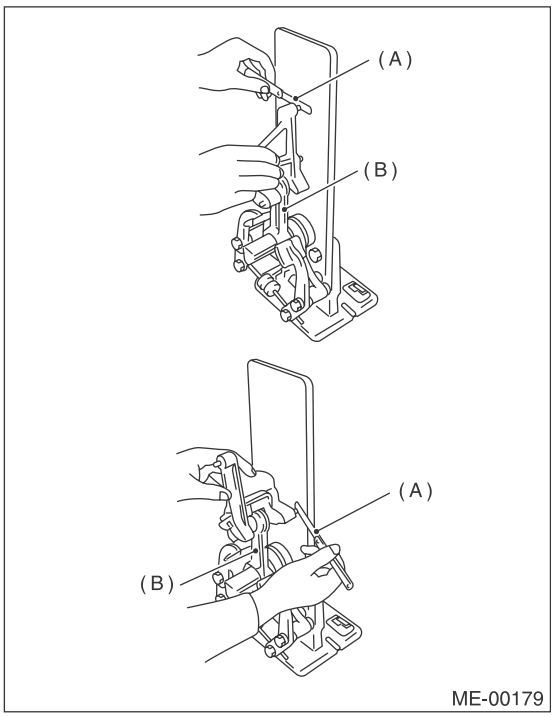

(A) Thickness gauge
(B) Connecting rod

3) Install the connecting rod with bearings attached to the crankshaft, and using a thickness gauge, measure the thrust clearance. If the thrust clearance exceeds the standard or uneven wear is found, replace the connecting rod.

Connecting rod thrust clearance:
Standard
0.070 — 0.330 mm (0.0028 — 0.0130 in)

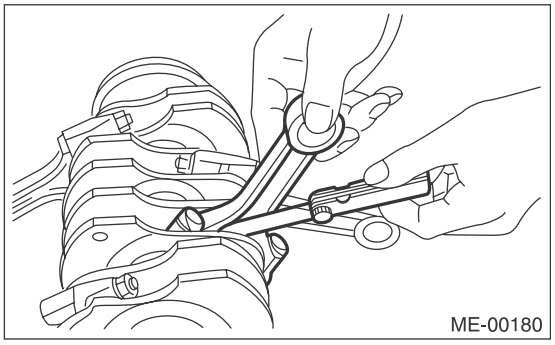

4) Inspect the connecting rod bearing for scar, peeling, seizure, melting, wear, etc.

5) Measure the oil clearance on each connecting rod bearing using plastigauge. If any oil clearance is not within the standard, replace the defective bearing with a new part of standard size or undersize as necessary.

Connecting rod oil clearance:
Standard
0.017 — 0.045 mm (0.0007 — 0.0018 in)

Unit: mm (in)

Bearing	Bearing size (Thickness at center)	Outer diameter of crank pin
Standard	1.490 — 1.506 (0.0587 — 0.0593)	51.976 — 52.000 (2.0463 — 2.0472)
0.03 (0.0012) Undersize	1.504 — 1.512 (0.0592 — 0.0595)	51.954 — 51.970 (2.0454 — 2.0461)
0.05 (0.0020) Undersize	1.514 — 1.522 (0.0596 — 0.0599)	51.934 — 51.950 (2.0447 — 2.0453)
0.25 (0.0098) Undersize	1.614 — 1.622 (0.0635 — 0.0639)	51.734 — 51.750 (2.0368 — 2.0374)

6) Inspect the bushing at connecting rod small end, and replace with a new part if worn or damaged.
7) Measure the piston pin clearance at connecting rod small end. Replace it with a new part if the value is not within the standard,

Clearance between piston pin and bushing:
Standard
0 — 0.022 mm (0 — 0.0009 in)

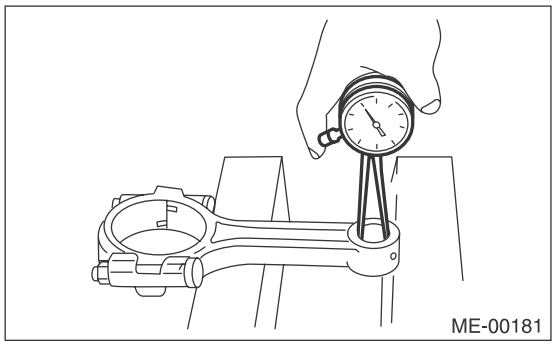

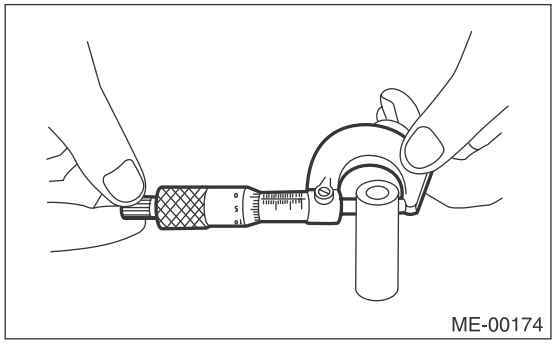

8) The replacement procedure for the connecting rod small end bushing is as follows.
(1) Remove the bushing from connecting rod with ST and press.

(2) Apply oil on the periphery of the new bushing, and press the bushing in with the ST.

ST 499037100 CONNECTING ROD BUSHING REMOVER AND INSTALLER

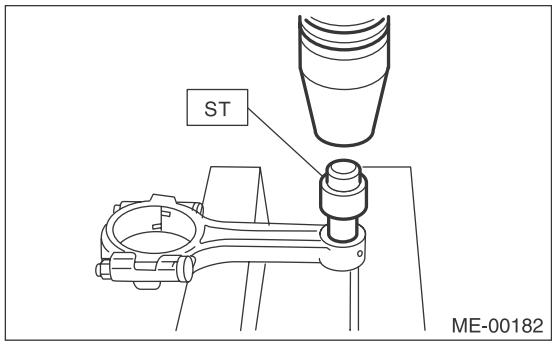

(3) Make two 3 mm (0.12 in) holes in the pressed bushing to match the pre-manufactured holes on the connecting rod, then ream the inside of the bushing.

(4) After completion of reaming, clean the bushing to remove chips.

6. CRANKSHAFT AND CRANKSHAFT BEARING

1) Clean the crankshaft completely, and check it for cracks using liquid penetrant tester. If defective, replace the crankshaft.

2) Measure warping of the crankshaft. If it exceeds the limit, correct or replace it.

NOTE:
If a suitable V-block is not available, using just the #1 and #5 crankshaft bearings on cylinder block, position the crankshaft on cylinder block. Then, measure the crankshaft bend using a dial gauge.

Crankshaft bend limit:
0.035 mm (0.0014 in)

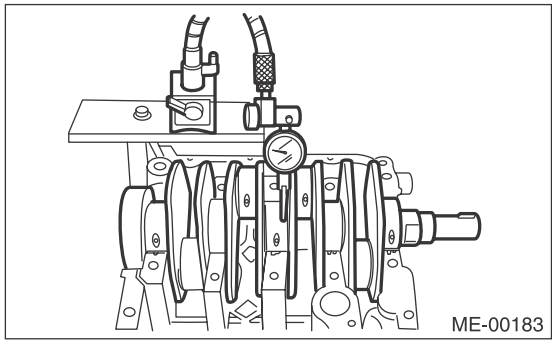

3) Inspect the crank journal and crank pin for wear. If they are not within the standard, replace the bearing with a suitable (undersize) one, and replace or grind to correct the crankshaft as necessary. When grinding the crank journal or crank pin, finish them to the specified dimensions according to the undersize bearing to be used.

Crank pin:
Out-of-roundness
0.003 mm (0.0001 in)
Cylindricality
0.004 mm (0.0002 in)
Grinding limit (dia.)
To 51.750 mm (2.0374 in)

Crank journal:
Out-of-roundness
0.005 mm (0.0002 in)
Cylindricality
0.006 mm (0.0002 in)
Grinding limit (dia.)
To 59.758 mm (2.3527 in)

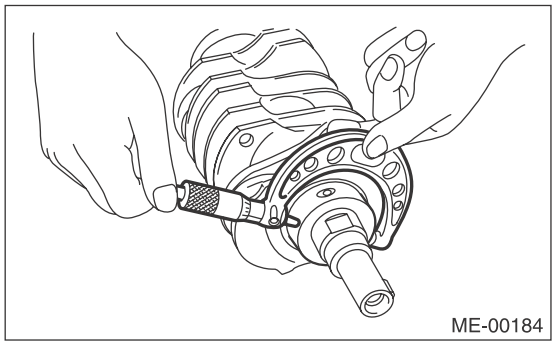

Unit: mm (in)

		Crank journal diameter		Crank pin outer diameter
		#1, #3	#2, #4, #5	
Standard	Journal O.D.	59.984 — 60.008 (2.3616 — 2.3625)	59.984 — 60.008 (2.3616 — 2.3625)	51.976 — 52.000 (2.0463 — 2.0472)
	Bearing size (Thickness at center)	1.998 — 2.015 (0.0787 — 0.0793)	2.000 — 2.017 (0.0787 — 0.0794)	1.490 — 1.506 (0.0587 — 0.0593)
0.03 (0.0012) Undersize	Journal O.D.	59.962 — 59.978 (2.3607 — 2.3613)	59.962 — 59.978 (2.3607 — 2.3613)	51.954 — 51.970 (2.0454 — 2.0461)
	Bearing size (Thickness at center)	2.017 — 2.020 (0.0794 — 0.0795)	2.019 — 2.022 (0.0795 — 0.0796)	1.504 — 1.512 (0.0592 — 0.0595)
0.05 (0.0020) Undersize	Journal O.D.	59.942 — 59.958 (2.3599 — 2.3605)	59.942 — 59.958 (2.3599 — 2.3605)	51.934 — 51.950 (2.0447 — 2.0453)
	Bearing size (Thickness at center)	2.027 — 2.030 (0.0798 — 0.0799)	2.029 — 2.032 (0.0799 — 0.0800)	1.514 — 1.522 (0.0596 — 0.0599)
0.25 (0.0098) Undersize	Journal O.D.	59.742 — 59.758 (2.3520 — 2.3527)	59.742 — 59.758 (2.3520 — 2.3527)	51.734 — 51.750 (2.0368 — 2.0374)
	Bearing size (Thickness at center)	2.127 — 2.130 (0.0837 — 0.0839)	2.129 — 2.132 (0.0838 — 0.0839)	1.614 — 1.622 (0.0635 — 0.0639)

4) Use a thickness gauge to measure the thrust clearance of crankshaft at #5 crank journal bearing. If clearance exceeds the standard, replace the bearing.

Crankshaft thrust clearance:
Standard
0.030 — 0.115 mm (0.0012 — 0.0045 in)

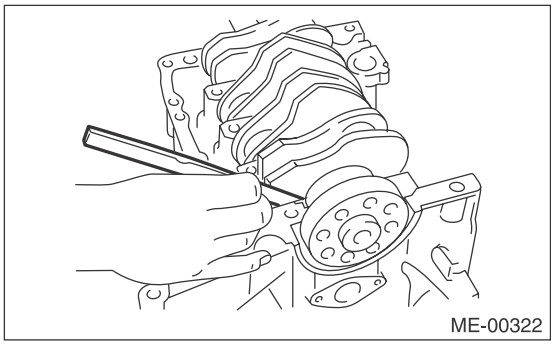
ME-00322

5) Inspect individual crankshaft bearings for signs of flaking, seizure, melting and wear.
6) Measure the oil clearance on each crankshaft bearing using plastigauge. If the measured value is out of standard, replace the defective bearing with an undersize one, and replace or grind to correct the crankshaft as necessary.

Crankshaft oil clearance:
Standard
0.010 — 0.030 mm (0.00039 — 0.0012 in)

21.Intake and Exhaust Valve

A: SPECIFICATION

Refer to “Cylinder Head” for removal and installation procedures of the intake and exhaust valves. <Ref. to ME(H4DOTC)-72, REMOVAL, Cylinder Head.> <Ref. to ME(H4DOTC)-73, INSTALLATION, Cylinder Head.>

22. Piston

A: SPECIFICATION

Refer to “Cylinder Block” for removal and installation procedures of pistons. <Ref. to ME(H4DOTC)-81, REMOVAL, Cylinder Block.> <Ref. to ME(H4DOTC)-86, INSTALLATION, Cylinder Block.>

23.Connecting Rod

A: SPECIFICATION

Refer to “Cylinder Block” for removal and installation procedures of connecting rod. <Ref. to ME(H4DOTC)-81, REMOVAL, Cylinder Block.> <Ref. to ME(H4DOTC)-86, INSTALLATION, Cylinder Block.>

24.Crankshaft

A: SPECIFICATION

Refer to “Cylinder Block” for removal and installation procedures of the crankshaft. <Ref. to ME(H4DOTC)-81, REMOVAL, Cylinder Block.> <Ref. to ME(H4DOTC)-86, INSTALLATION, Cylinder Block.>

25.Engine Trouble in General

A: INSPECTION

NOTE:
The “RANK” shown in the chart shows the possibilities of the cause of trouble in order from “Very often” to “Rarely”.
A — Very often
B — Sometimes
C — Rarely

Symptoms	Problem parts etc.	Possible cause	RANK
1. Engine does not start.			
1) Starter does not turn.	Starter	Defective battery-to-starter harness	B
		Defective starter switch	C
		Defective starter	B
	Battery	Improper connection of terminal	A
		Run-down battery	A
		Defective charging system	B
	Friction	Seizure of crankshaft and connecting rod bearing	C
		Seized camshaft	C
		Seized or stuck piston and cylinder	C
	Immobilizer system <Ref. to IM(diag)-2, Basic Diagnostic Procedure.>		A
2) Initial combustion does not occur.	Starter	Defective starter	C
	Engine control system <Ref. to EN(H4DOTC)(diag)-2, Basic Diagnostic Procedure.>		A
	Fuel line	Defective fuel pump and relay	A
		Clogged fuel line	C
		Lack of fuel or insufficient fuel	B
	Timing belt	Degradation, etc.	B
		Defective timing	B
	Compression	Incorrect valve clearance	C
		Loosened spark plug or defective gasket	C
		Loosened cylinder head bolt or defective cylinder head gasket	C
		Improper valve sealing	C
		Defective valve stem	C
		Worn or broken valve spring	B
		Worn or stuck piston rings, cylinder and piston	C
		Incorrect valve timing	B
		Improper engine oil (low viscosity)	B

Symptoms	Problem parts etc.	Possible cause	RANK
3) Initial combustion occurs.	Engine control system <Ref. to EN(H4DOTC)(diag)-2, Basic Diagnostic Procedure.>		A
	Intake system	Defective intake manifold gasket	B
		Defective throttle body gasket	B
	Fuel line	Defective fuel pump and relay	C
		Clogged fuel line	C
		Lack of fuel or insufficient fuel	B
	Timing belt	Degradation, etc.	B
		Defective timing	B
	Compression	Incorrect valve clearance	C
		Loosened spark plug or defective gasket	C
		Loosened cylinder head bolt or defective cylinder head gasket	C
		Improper valve sealing	C
		Defective valve stem	C
		Worn or broken valve spring	B
		Worn or stuck piston rings, cylinder and piston	C
		Incorrect valve timing	B
		Improper engine oil (low viscosity)	B
4) Engine stalls after initial combustion.	Engine control system <Ref. to EN(H4DOTC)(diag)-2, Basic Diagnostic Procedure.>		A
	Intake system	Loosened or cracked intake duct	B
		Loosened or cracked PCV hose	C
		Loosened or cracked vacuum hose	C
		Defective intake manifold gasket	B
		Defective throttle body gasket	B
		Dirty air cleaner element	C
	Fuel line	Clogged fuel line	C
		Lack of fuel or insufficient fuel	B
	Timing belt	Degradation, etc.	B
		Defective timing	B
	Compression	Incorrect valve clearance	C
		Loosened spark plug or defective gasket	C
		Loosened cylinder head bolt or defective cylinder head gasket	C
		Improper valve sealing	C
		Defective valve stem	C
		Worn or broken valve spring	B
		Worn or stuck piston rings, cylinder and piston	C
		Incorrect valve timing	B
		Improper engine oil (low viscosity)	B

Symptoms	Problem parts etc.	Possible cause	RANK
2. Rough idle and engine stall	Engine control system <Ref. to EN(H4DOTC)(diag)-2, Basic Diagnostic Procedure.>		A
	Intake system	Loosened or cracked intake duct	A
		Loosened or cracked PCV hose	A
		Loosened or cracked vacuum hose	A
		Defective intake manifold gasket	B
		Defective throttle body gasket	B
		Defective PCV valve	C
		Loosened oil filler cap	B
		Dirty air cleaner element	C
	Fuel line	Defective fuel pump and relay	C
		Clogged fuel line	C
		Lack of fuel or insufficient fuel	B
	Timing belt	Defective timing	C
	Compression	Incorrect valve clearance	B
		Loosened spark plug or defective gasket	B
		Loosened cylinder head bolt or defective cylinder head gasket	B
		Improper valve sealing	B
		Defective valve stem	C
		Worn or broken valve spring	B
		Worn or stuck piston rings, cylinder and piston	B
		Incorrect valve timing	A
		Improper engine oil (low viscosity)	B
	Lubrication system	Incorrect oil pressure	B
		Defective rocker cover gasket	C
	Cooling system	Over-heating	C
	Others	Evaporative emission control system malfunction	A
		Stuck or damaged throttle valve	B

Symptoms	Problem parts etc.	Possible cause	RANK
3. Low output, hesitation and poor acceleration	Engine control system <Ref. to EN(H4DOTC)(diag)-2, Basic Diagnostic Procedure.>		A
	Intake system	Loosened or cracked intake duct	A
		Loosened or cracked PCV hose	A
		Loosened or cracked vacuum hose	B
		Defective intake manifold gasket	B
		Defective throttle body gasket	B
		Defective PCV valve	B
		Loosened oil filler cap	B
		Dirty air cleaner element	A
	Fuel line	Defective fuel pump and relay	B
		Clogged fuel line	B
		Lack of fuel or insufficient fuel	C
	Timing belt	Defective timing	B
	Compression	Incorrect valve clearance	B
		Loosened spark plug or defective gasket	B
		Loosened cylinder head bolt or defective cylinder head gasket	B
		Improper valve sealing	B
		Defective valve stem	C
		Worn or broken valve spring	B
		Worn or stuck piston rings, cylinder and piston	C
		Incorrect valve timing	A
		Improper engine oil (low viscosity)	B
	Lubrication system	Incorrect oil pressure	B
	Cooling system	Over-heating	C
		Over-cooling	C
	Others	Evaporative emission control system malfunction	A

Symptoms	Problem parts etc.	Possible cause	RANK
4. Surging	Engine control system <Ref. to EN(H4DOTC)(diag)-2, Basic Diagnostic Procedure.>		A
	Intake system	Loosened or cracked intake duct	A
		Loosened or cracked PCV hose	A
		Loosened or cracked vacuum hose	A
		Defective intake manifold gasket	B
		Defective throttle body gasket	B
		Defective PCV valve	B
		Loosened oil filler cap	B
		Dirty air cleaner element	B
	Fuel line	Defective fuel pump and relay	B
		Clogged fuel line	B
		Lack of fuel or insufficient fuel	C
	Timing belt	Defective timing	B
	Compression	Incorrect valve clearance	B
		Loosened spark plug or defective gasket	C
		Loosened cylinder head bolt or defective cylinder head gasket	C
		Improper valve sealing	C
		Defective valve stem	C
		Worn or broken valve spring	C
		Worn or stuck piston rings, cylinder and piston	C
		Incorrect valve timing	A
		Improper engine oil (low viscosity)	B
	Cooling system	Over-heating	B
	Others	Evaporative emission control system malfunction	C
5. Engine does not return to idle.	Engine control system <Ref. to EN(H4DOTC)(diag)-2, Basic Diagnostic Procedure.>		A
	Intake system	Loosened or cracked vacuum hose	A
	Others	Stuck or damaged throttle valve	A
6. Dieseling (Run-on)	Engine control system <Ref. to EN(H4DOTC)(diag)-2, Basic Diagnostic Procedure.>		A
	Cooling system	Over-heating	B
	Others	Evaporative emission control system malfunction	B
7. After burning in exhaust system	Engine control system <Ref. to EN(H4DOTC)(diag)-2, Basic Diagnostic Procedure.>		A
	Intake system	Loosened or cracked intake duct	C
		Loosened or cracked PCV hose	C
		Loosened or cracked vacuum hose	B
		Defective PCV valve	B
		Loosened oil filler cap	C
	Timing belt	Defective timing	B
	Compression	Incorrect valve clearance	B
		Loosened spark plug or defective gasket	C
		Loosened cylinder head bolt or defective cylinder head gasket	C
		Improper valve sealing	B
		Defective valve stem	C
		Worn or broken valve spring	C
		Worn or stuck piston rings, cylinder and piston	C
		Incorrect valve timing	A
	Lubrication system	Incorrect oil pressure	C
	Cooling system	Over-cooling	C
	Others	Evaporative emission control system malfunction	C

Symptoms	Problem parts etc.	Possible cause	RANK
8. Knocking	Engine control system <Ref. to EN(H4DOTC)(diag)-2, Basic Diagnostic Procedure.>		A
	Intake system	Loosened oil filler cap	B
	Timing belt	Defective timing	B
	Compression	Incorrect valve clearance	C
		Incorrect valve timing	B
	Cooling system	Over-heating	A
9. Excessive engine oil consumption	Intake system	Loosened or cracked PCV hose	A
		Defective PCV valve	B
		Loosened oil filler cap	C
	Compression	Defective valve stem	A
		Worn or stuck piston rings, cylinder and piston	A
	Lubrication system	Loosened oil pump attaching bolts and defective gasket	B
		Defective oil filter gasket	B
		Defective crankshaft oil seal	B
		Defective rocker cover gasket	B
		Loosened oil drain plug or defective gasket	B
		Loosened oil pan fitting bolts or defective oil pan	B
10. Excessive fuel consumption	Engine control system <Ref. to EN(H4DOTC)(diag)-2, Basic Diagnostic Procedure.>		A
	Intake system	Dirty air cleaner element	A
	Timing belt	Defective timing	B
	Compression	Incorrect valve clearance	B
		Loosened spark plug or defective gasket	C
		Loosened cylinder head bolt or defective cylinder head gasket	C
		Improper valve sealing	B
		Defective valve stem	C
		Worn or broken valve spring	C
		Worn or stuck piston rings, cylinder and piston	B
		Incorrect valve timing	B
	Lubrication system	Incorrect oil pressure	C
	Cooling system	Over-cooling	C

26.Engine Noise

A: INSPECTION

Type of sound	Condition	Possible cause
Regular clicking sound	Sound increases as engine speed increases.	• Valve mechanism is defective. • Incorrect valve clearance • Worn camshaft • Broken valve spring
Heavy and dull clank	Oil pressure is low.	• Worn crankshaft main bearing • Worn connecting rod bearing (large end)
	Oil pressure is normal.	• Damaged engine mounting
High-pitched clank	Sound is noticeable when accelerating with an overload condition.	• Ignition timing advanced • Accumulation of carbon inside combustion chamber • Wrong heat range of spark plug • Improper octane value gasoline
Clank when engine speed is between 1,000 and 2,000 rpm.	Noise is reduced when fuel injector connector of noisy cylinder is disconnected. *	• Worn crankshaft main bearing • Worn connecting rod bearing (large end)
Knocking sound when engine is operating under idling speed and engine is warm	Noise is reduced when fuel injector connector of noisy cylinder is disconnected. *	• Worn cylinder liner and piston ring • Broken or stuck piston ring • Worn piston pin and hole at piston end of connecting rod
	Sound is not reduced if each fuel injector connector is disconnected in turn. *	• Unusually worn valve lifter • Worn cam sprocket • Worn camshaft journal bore in cylinder head
Squeaky sound	—	• Insufficient generator lubrication
Rubbing sound	—	• Poor contact of generator brush and rotor
Gear scream when starting engine	—	• Defective ignition starter switch • Worn gear and starter pinion
Sound like polishing glass with a dry cloth	—	• Loose V-belt • Defective water pump shaft
Hissing sound	—	• Insufficient compression • Air leakage in air intake system, hose, connection or manifold
Timing belt noise	—	• Loose timing belt • Timing belt contacting with adjacent part
Valve noise	—	• Incorrect valve clearance

* When disconnecting the fuel injector connector, the malfunction indicator light illuminates and DTC is stored in ECM memory. Therefore, perform the Clear Memory Mode <Ref. to EN(H4DOTC)(diag)-55, OPERATION, Clear Memory Mode.> and Inspection Mode <Ref. to EN(H4DOTC)(diag)-44, PROCEDURE, Inspection Mode.> after connecting the fuel injector connector.

EXHAUST

EX(H4DOTC)

Page

1. General Description 2
2. Front Exhaust Pipe 5
3. Center Exhaust Pipe 12
4. Rear Exhaust Pipe 15
5. Muffler 16

1. General Description

A: COMPONENT

1. FRONT EXHAUST PIPE

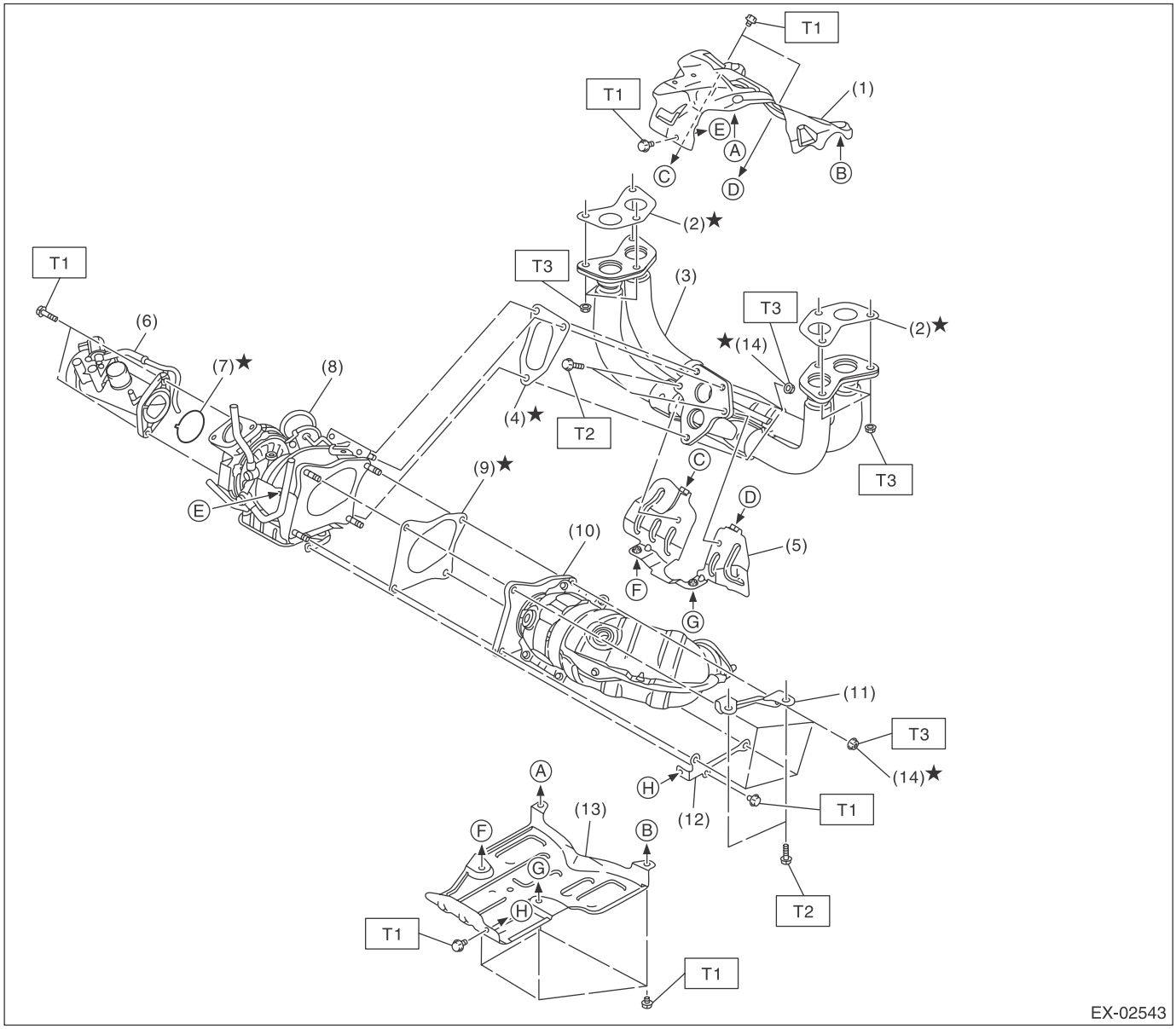

(1) Exhaust pipe cover
(2) Gasket
(3) Front exhaust pipe
(4) Gasket
(5) Exhaust pipe stay
(6) Intake duct
(7) O-ring
(8) Turbocharger
(9) Gasket
(10) Center exhaust pipe (Front)
(11) Turbocharger upper stay
(12) Turbocharger lower stay
(13) Engine cover
(14) Self-locking nut

Tightening torque:N·m (kgf-m, ft-lb)
T1: 6.4 (0.7, 4.7)
T2: 33 (3.4, 24.3)
T3: 42.5 (4.3, 31.3)

2. CENTER AND REAR EXHAUST PIPE, AND MUFFLER

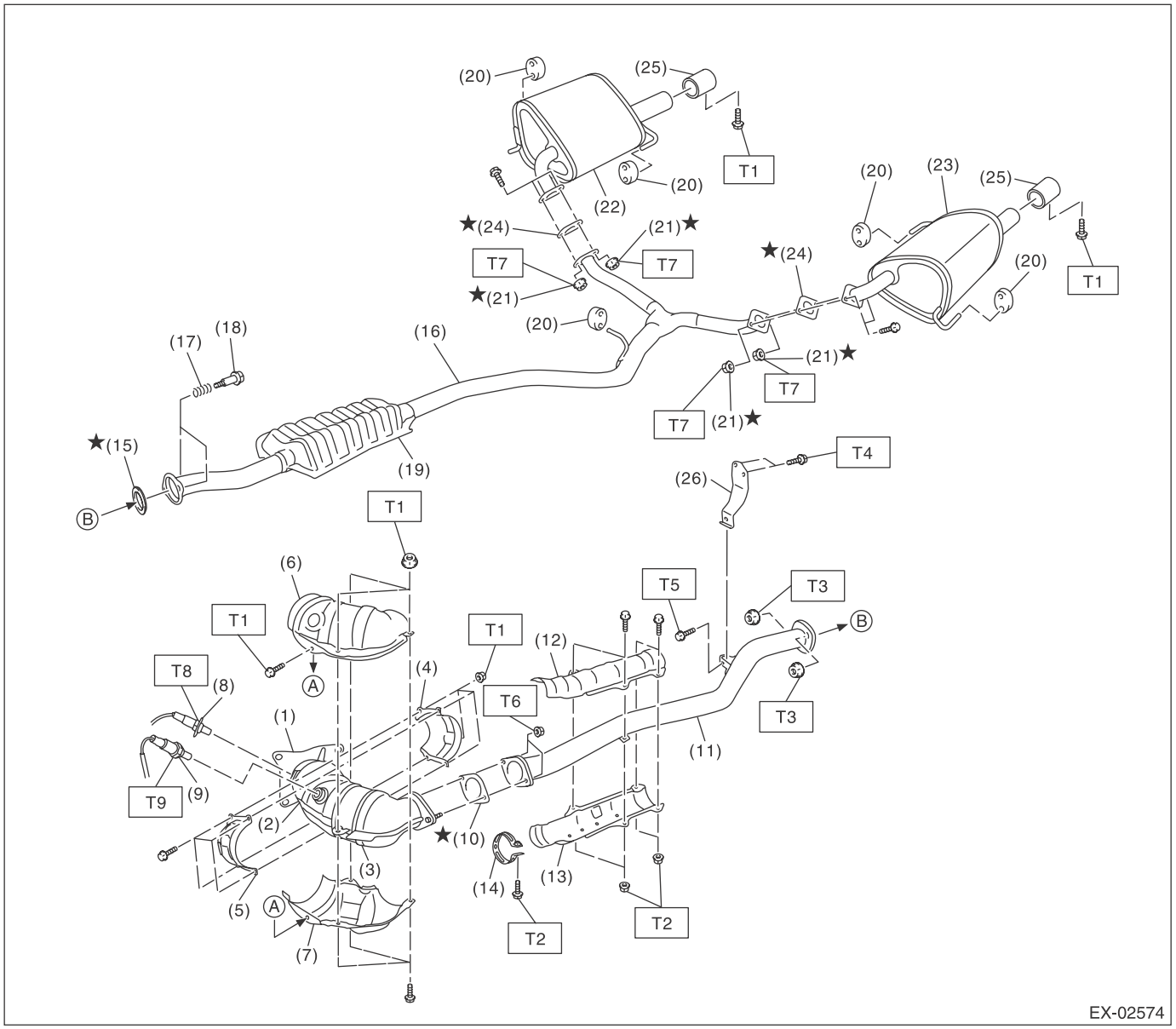

(1)	Center exhaust pipe (Front)	(14)	Center exhaust pipe band	
(2)	Front catalytic converter	(15)	Gasket	
(3)	Rear catalytic converter	(16)	Rear exhaust pipe	
(4)	Center exhaust pipe inner cover (Front)	(17)	Spring	
(5)	Center exhaust pipe outer cover (Front)	(18)	BOLT	
(6)	Center exhaust pipe upper cover (Front)	(19)	Chamber	
(7)	Center exhaust pipe lower cover (Front)	(20)	Cushion rubber	
(8)	Front oxygen (A/F) sensor	(21)	Self-locking nut	
(9)	Rear oxygen sensor	(22)	Muffler RH	
(10)	Gasket	(23)	Muffler LH	
(11)	Center exhaust pipe (Rear)	(24)	Gasket	
(12)	Center exhaust pipe upper cover (Rear)	(25)	Muffler cutter	
(13)	Center exhaust pipe lower cover (Rear)	(26)	Hanger bracket	

Tightening torque:N·m (kgf-m, ft-lb)	
T1:	*7.5 (0.8, 5.5)*
T2:	*13 (1.3, 9.6)*
T3:	*18 (1.8, 13.3)*
T4:	*23 (2.3, 17.0)*
T5:	*35 (3.6, 25.8)*
T6:	*42.5 (4.3, 31.3)*
T7:	*48 (4.9, 35.4)*
T8:	*<Ref. to FU(H4DOTC)-53, INSTALLATION, Front Oxygen (A/F) Sensor.>*
T9:	*<Ref. to FU(H4DOTC)-55, INSTALLATION, Rear Oxygen Sensor.>*

B: CAUTION

- Wear appropriate work clothing, including a cap, protective goggles and protective shoes when performing any work.
- Remove contamination including dirt and corrosion before removal, installation or disassembly.
- Keep the disassembled parts in order and protect them from dust and dirt.
- Before removal, installation or disassembly, be sure to clarify the failure. Avoid unnecessary removal, installation, disassembly and replacement.
- Vehicle components are extremely hot after driving. Be wary of receiving burns from heated parts.
- Be sure to tighten fasteners including bolts and nuts to the specified torque.
- Place shop jacks or rigid racks at the specified points.
- Before disconnecting connectors of sensors or units, be sure to disconnect the ground cable from the battery.
- If any fat adheres to the exhaust pipe, wipe it off. Otherwise a fire may happen.

C: PREPARATION TOOL

1. GENERAL TOOL

TOOL NAME	REMARKS
TORX ® socket E10	Used for removing and installing center exhaust pipe (front).

2. Front Exhaust Pipe

A: REMOVAL

CAUTION:
Vehicle components are extremely hot after driving. Be wary of receiving burns from heated parts.

1) Remove the collector cover.
2) Disconnect the ground cable from battery.

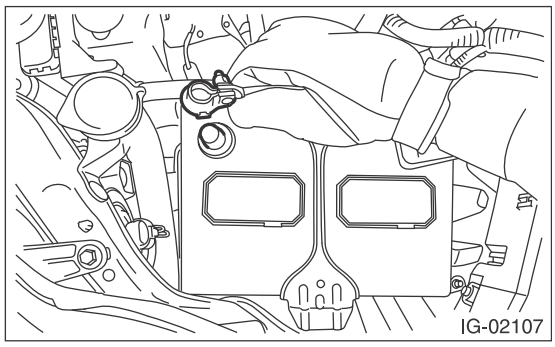

3) Remove the air intake duct. <Ref. to IN(H4DOTC)-12, REMOVAL, Air Intake Duct.>
4) Lift up the vehicle.
5) Remove the under cover. <Ref. to EI-35, REMOVAL, Front Under Cover.>
6) Drain engine coolant. <Ref. to CO(H4DOTC)-14, DRAINING OF ENGINE COOLANT, REPLACEMENT, Engine Coolant.>
7) Lower the vehicle.
8) Disconnect connectors from the front oxygen (A/F) sensor and rear oxygen sensor, and remove the clip (A) fastening the front oxygen (A/F) sensor harness and rear oxygen sensor harness.

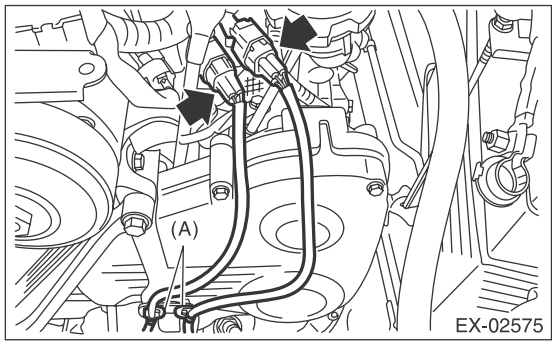

9) Disconnect the engine coolant hose from the water tank pipe and water pump.

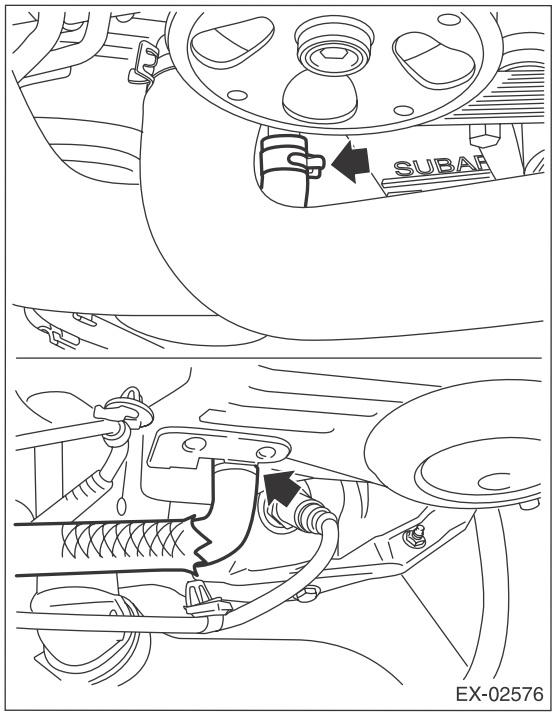

10) Remove the radiator sub fan motor assembly. <Ref. to CO(H4DOTC)-27, REMOVAL, Radiator Sub Fan and Fan Motor.>
11) Remove the engine coolant hose from clip (A), and remove the bolts which secure the intake duct to the turbocharger.

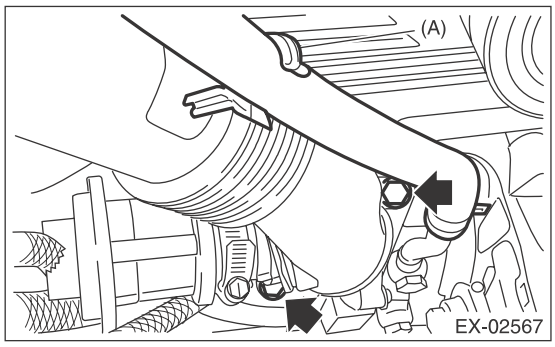

12) Lift up the vehicle.
13) Remove oil inlet pipe B (B) from oil inlet pipe A (A), and remove the bolt which holds oil inlet pipe C (C) and oil inlet pipe A (A).

CAUTION:
In order to prevent damaging the oil inlet pipe, fix the section (a) shown in the figure when loosing the oil inlet pipe flare nut, and avoid the part from rotating together while loosening the nut.

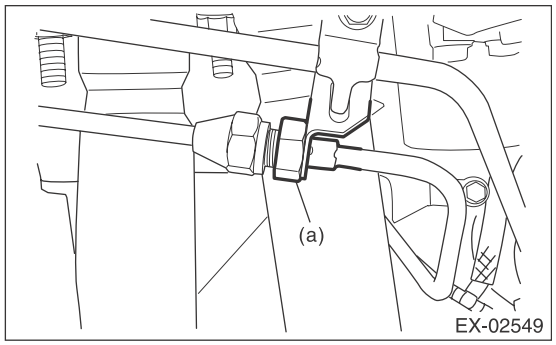

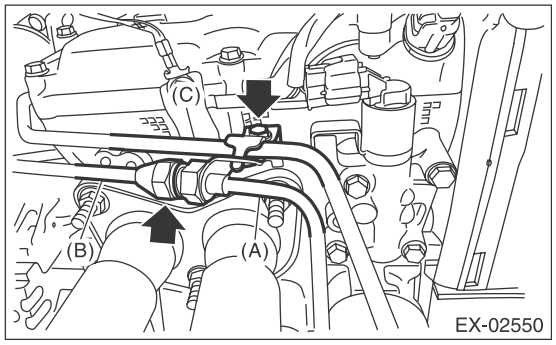

14) Disconnect the air control hose (A), and loosen the bolts which secure the intake duct to the turbocharger.

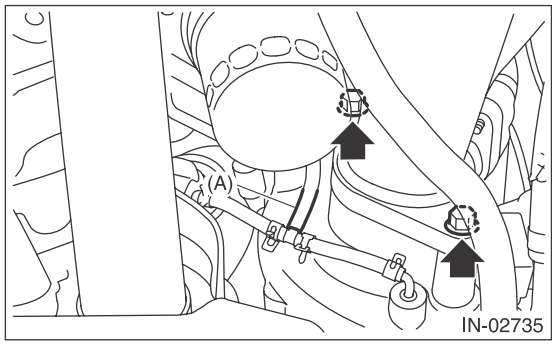

15) Remove the center exhaust pipe (rear) from the center exhaust pipe (front).

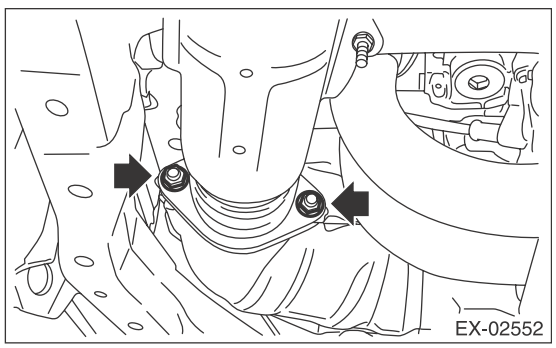

16) Remove the rear exhaust pipe from the center exhaust pipe (rear).

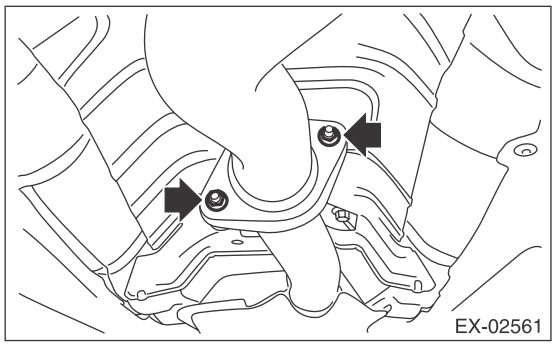

17) Remove the bolt which holds center exhaust pipe (rear) to the hanger bracket, and remove the center exhaust pipe (rear).

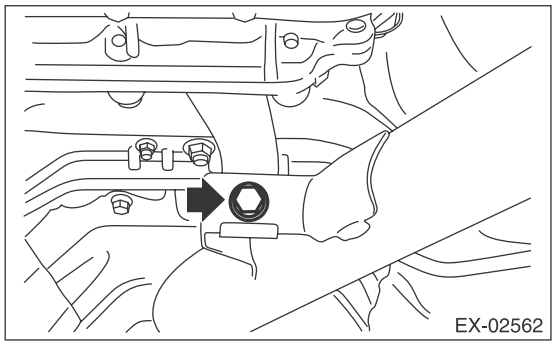

18) Remove the engine cover.

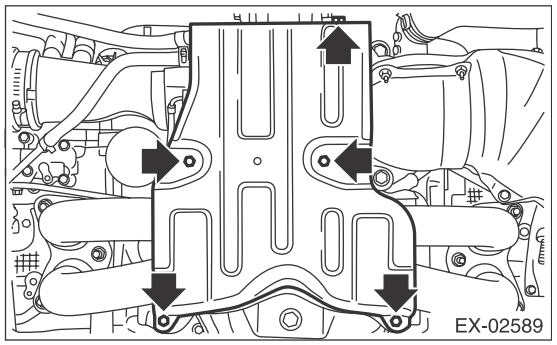

19) Remove bolts and nuts which secure the oil catch tank to the turbocharger and oil catch tank stay, and remove the oil catch tank from the turbocharger.

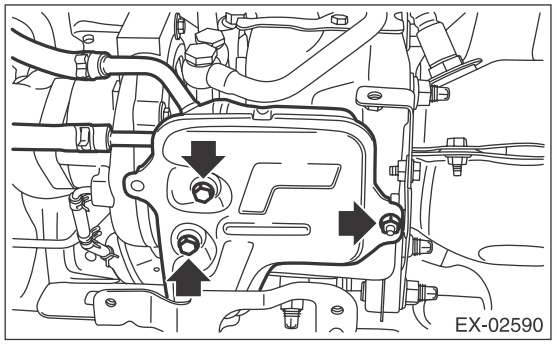

20) Remove the bolts which secure the turbocharger stay.

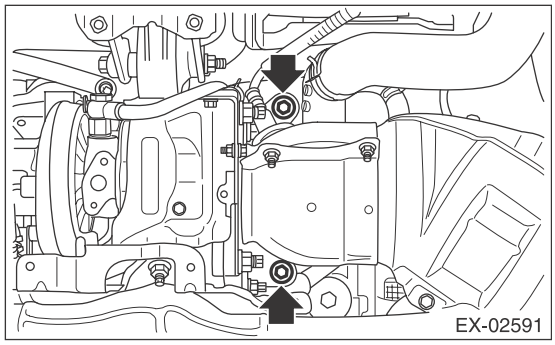

21) While holding the front exhaust pipe with transmission jack, remove the nuts which hold the front exhaust pipe to the cylinder head exhaust port, and remove the front exhaust pipe.

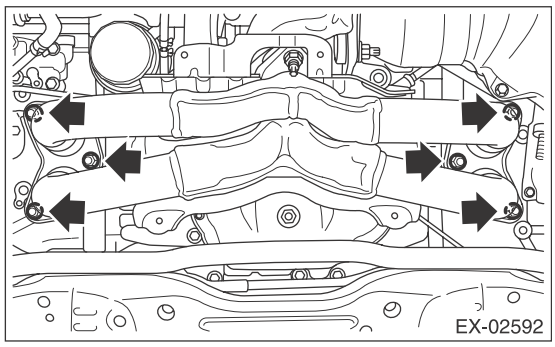

B: INSTALLATION

1) While holding the front exhaust pipe with transmission jack, set the front exhaust pipe, and install the nuts which hold the front exhaust pipe to the cylinder head exhaust port.

NOTE:
Use a new gasket.

Tightening torque:
42.5 N·m (4.3 kgf-m, 31.3 ft-lb)

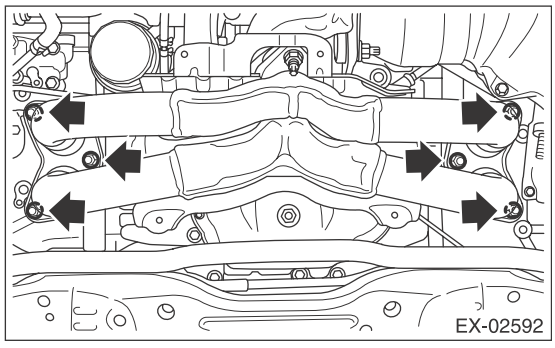

2) Attach the bolt which holds the turbocharger stay.

Tightening torque:
33 N·m (3.4 kgf-m, 24.3 ft-lb)

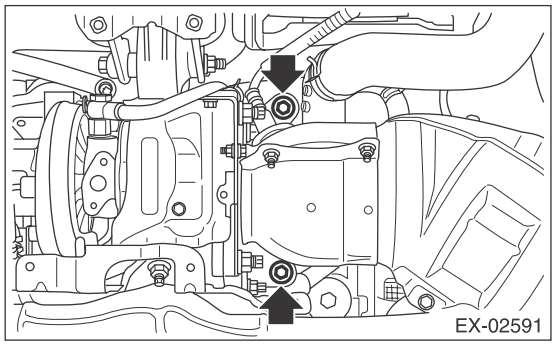

3) Set the oil catch tank to the turbocharger, and attach the bolt and nut which secure the oil catch tank to the turbocharger and oil catch tank stay.

NOTE:
- Use a new gasket.
- When installing the oil catch tank, tighten to the specified torque in the alphabetical order shown in the figure.

Tightening torque:
T1: 6.4 N·m (0.7 kgf-m, 4.7 ft-lb)
T2: 10.5 N·m (1.1 kgf-m, 7.7 ft-lb)

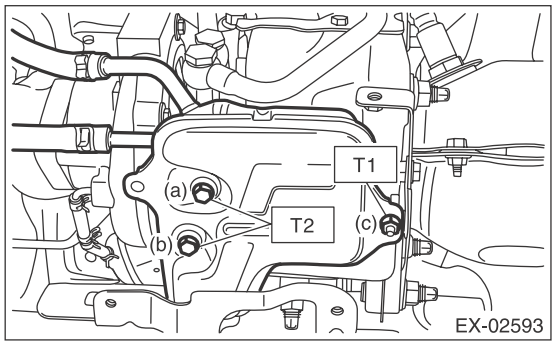

4) Install the engine cover.

Tightening torque:
6.4 N·m (0.7 kgf-m, 4.7 ft-lb)

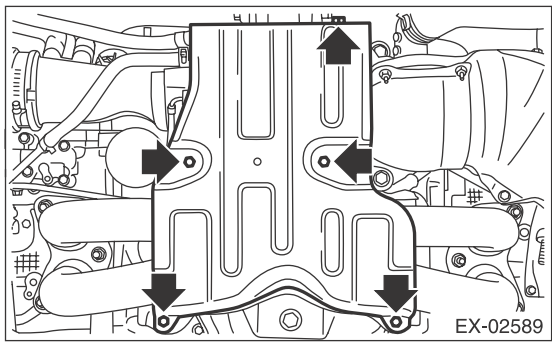

5) Install the center exhaust pipe (rear) and temporarily tighten the bolt which holds center exhaust pipe (rear) to the hanger bracket.

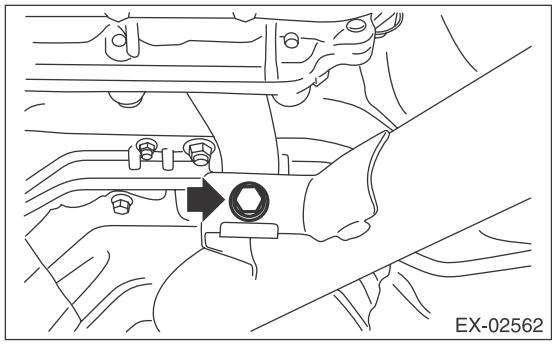

6) Install the rear exhaust pipe to the center exhaust pipe (rear).

NOTE:
Use a new gasket.

Tightening torque:
18 N·m (1.8 kgf-m, 13.3 ft-lb)

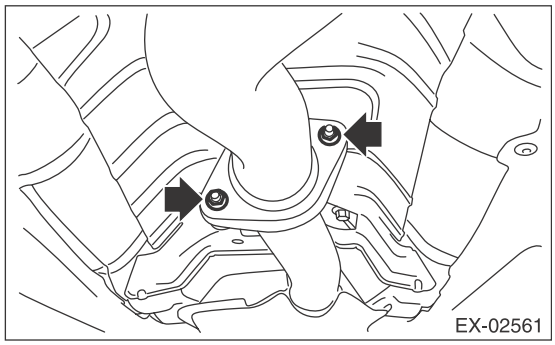

7) Assemble the center exhaust pipe (rear) to the center exhaust pipe (front).

NOTE:
Use a new gasket.

Tightening torque:
42.5 N·m (4.3 kgf-m, 31.3 ft-lb)

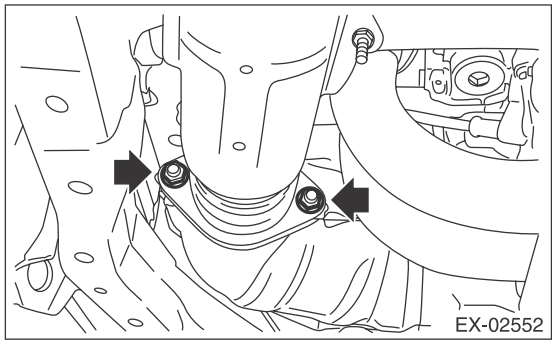

8) Tighten the bolts which hold center exhaust pipe (rear) to the hanger bracket.

Tightening torque:
35 N·m (3.6 kgf-m, 25.8 ft-lb)

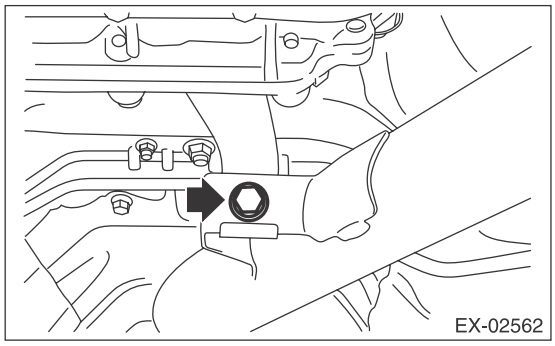

9) Install the bolts which secure the intake duct to the turbocharger, and connect the air control hose (A).

NOTE:
- Use new O-rings.
- Be careful not to pinch the O-ring.

Tightening torque:
6.4 N·m (0.7 kgf-m, 4.7 ft-lb)

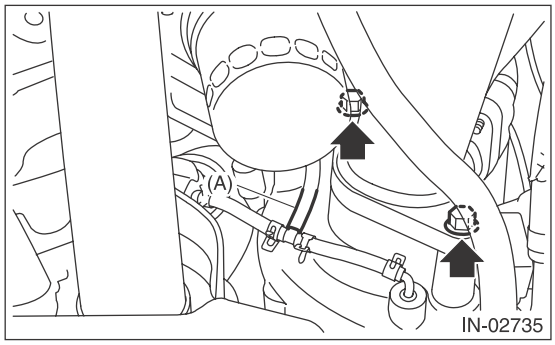

10) Install the bolt which holds oil inlet pipe C (C) and oil inlet pipe A (A), and install oil inlet pipe B (B) to oil inlet pipe A (A).

CAUTION:
In order to prevent damaging the oil inlet pipe, fix the section (a) shown in the figure when tightening the oil inlet pipe flare nut, and avoid the part from rotating together while tightening the nut.

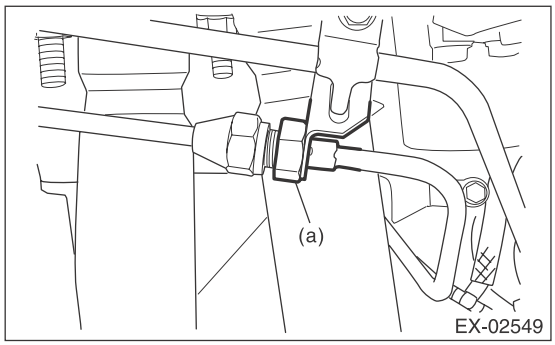

Tightening torque:
T1: 6.4 N·m (0.7 kgf-m, 4.7 ft-lb)
T2: 20 N·m (2.0 kgf-m, 14.8 ft-lb)

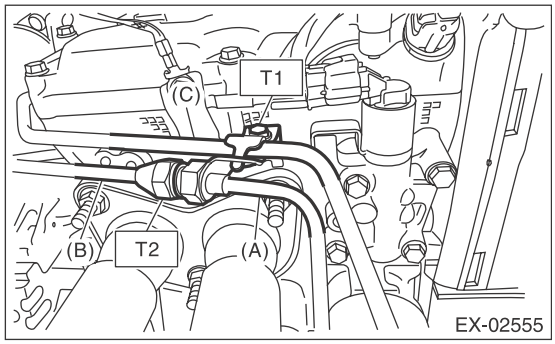

11) Install the under cover. <Ref. to EI-35, INSTALLATION, Front Under Cover.>
12) Lower the vehicle.
13) Install the engine coolant hose to the clip (A), and install the bolts which secure the intake duct to the turbocharger.

Tightening torque:
16 N·m (1.6 kgf-m, 11.8 ft-lb)

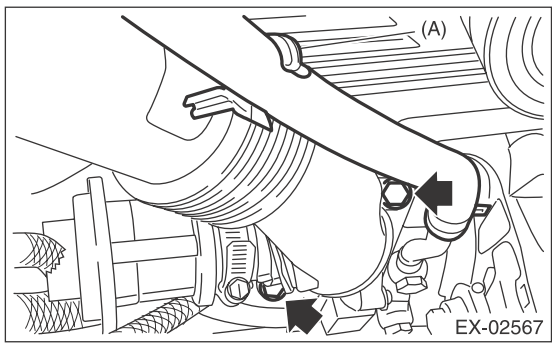

14) Install the radiator sub fan motor assembly. <Ref. to CO(H4DOTC)-27, INSTALLATION, Radiator Sub Fan and Fan Motor.>

15) Connect the engine coolant hoses to the water tank pipe and water pump.

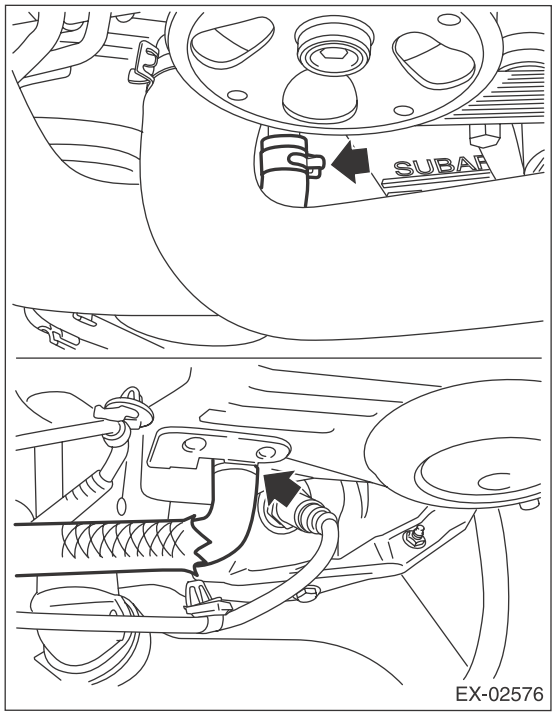

16) Connect connectors to the front oxygen (A/F) sensor and rear oxygen sensor, and secure the front oxygen (A/F) sensor harness and rear oxygen sensor harness with the clip (A).

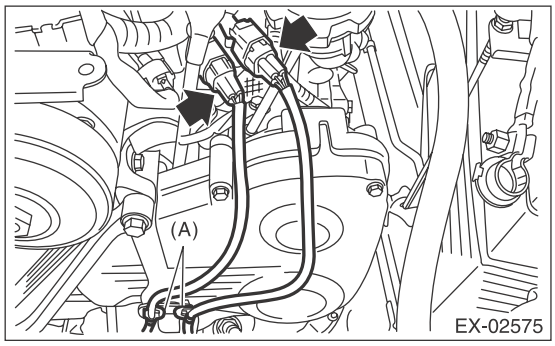

17) Install the air intake duct. <Ref. to IN(H4DOTC)-12, INSTALLATION, Air Intake Duct.>
18) Connect the ground cable to battery.

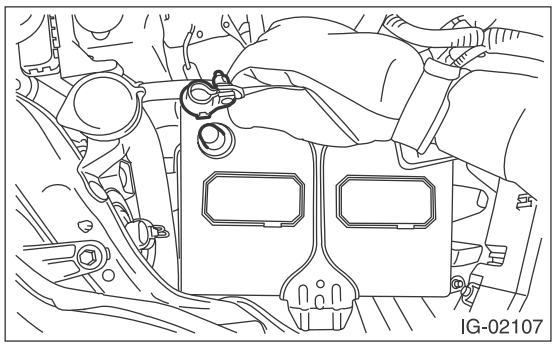

19) Fill engine coolant. <Ref. to CO(H4DOTC)-14, FILLING OF ENGINE COOLANT, REPLACEMENT, Engine Coolant.>
20) Install the collector cover.

C: DISASSEMBLY

1) Remove the exhaust pipe cover.

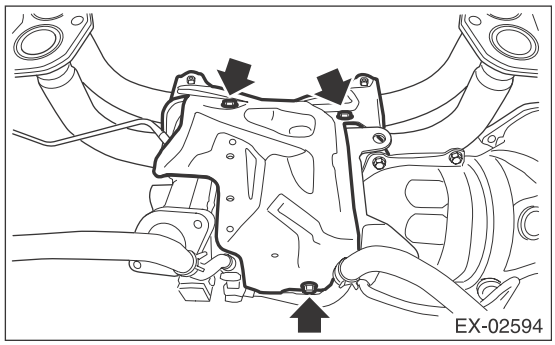

2) Remove nuts which secure the center exhaust pipe (front) to the turbocharger, and remove the center exhaust pipe (front) together with turbocharger upper stay (A) and turbocharger lower stay (B).

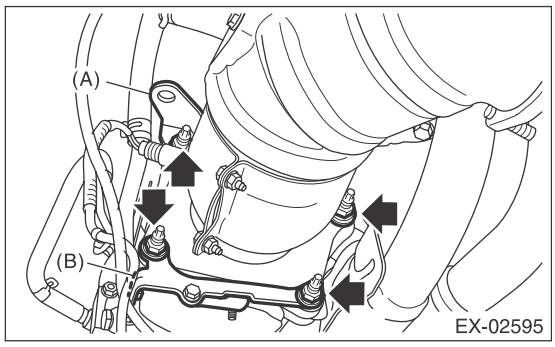

3) Remove the turbocharger from the front exhaust pipe.

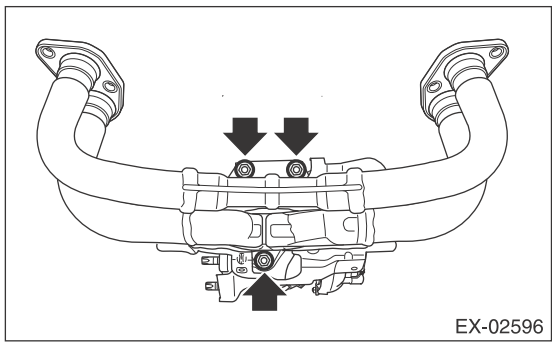

4) Remove the exhaust pipe stay from the front exhaust pipe.

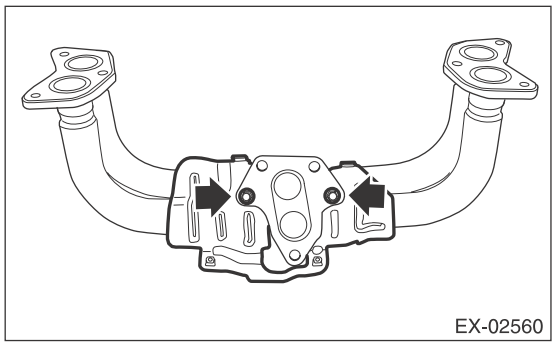

D: ASSEMBLY

1) Install the exhaust pipe stay to the front exhaust pipe.

Tightening torque:
33 N·m (3.4 kgf-m, 24.3 ft-lb)

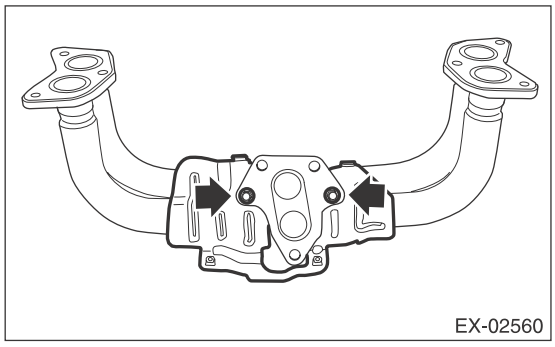

2) Install the turbocharger to the front exhaust pipe.

NOTE:
Use a new gasket and self-locking nut.

Tightening torque:
42.5 N·m (4.3 kgf-m, 31.3 ft-lb)

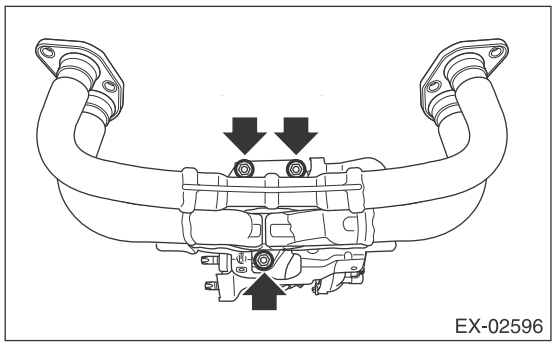

3) Install the center exhaust pipe (front) to the turbocharger together with turbocharger upper stay (A) and turbocharger lower stay (B).

NOTE:
Use a new gasket and self-locking nut.

Tightening torque:
42.5 N·m (4.3 kgf-m, 31.3 ft-lb)

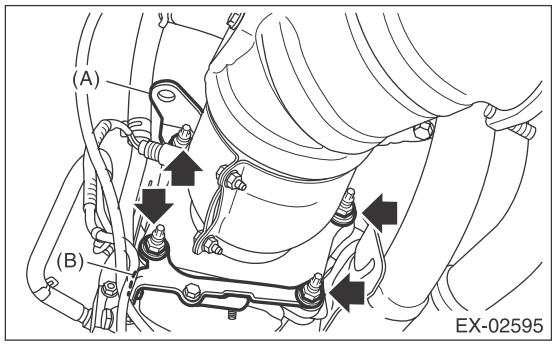

4) Install the exhaust pipe cover.

Tightening torque:
6.4 N·m (0.7 kgf-m, 4.7 ft-lb)

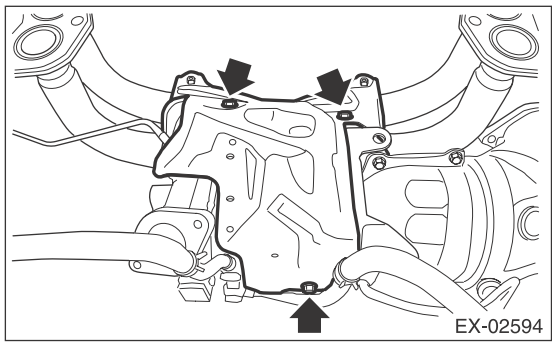

E: INSPECTION

1) Check the connections and welds for exhaust leaks.
2) Make sure there are no holes or rusting.

3. Center Exhaust Pipe

A: REMOVAL

1) Remove the collector cover.
2) Disconnect the ground cable from battery.

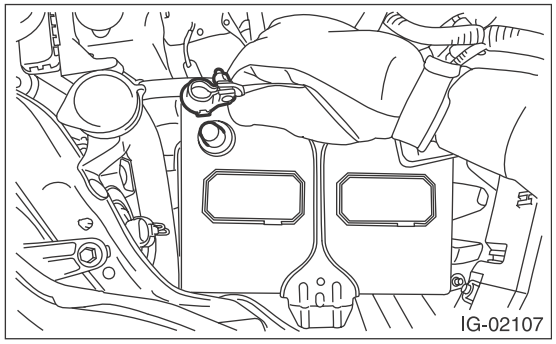

3) Disconnect connectors from the front oxygen (A/F) sensor and rear oxygen sensor, and remove the clip (A) fastening the front oxygen (A/F) sensor harness and rear oxygen sensor harness.

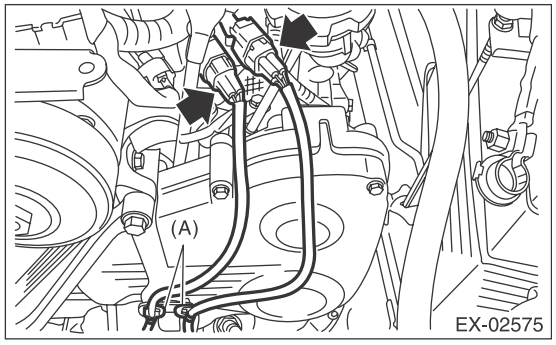

4) Lift up the vehicle.
5) Remove the under cover. <Ref. to EI-35, REMOVAL, Front Under Cover.>
6) Remove the center exhaust pipe (front) from the center exhaust pipe (rear).

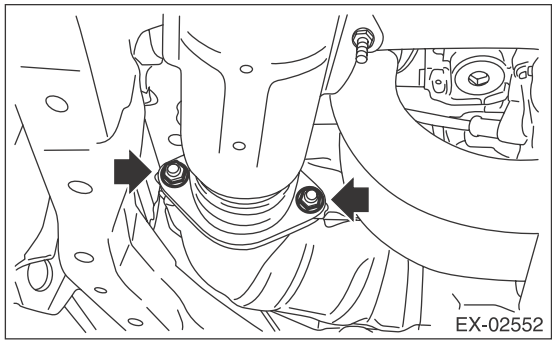

7) Remove the rear exhaust pipe from the center exhaust pipe (rear).

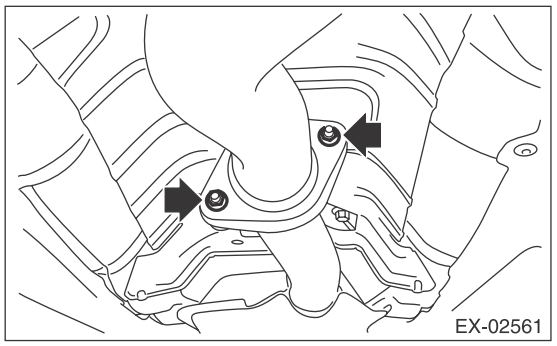

8) Remove the bolt which holds center exhaust pipe (rear) to the hanger bracket, and remove the center exhaust pipe (rear).

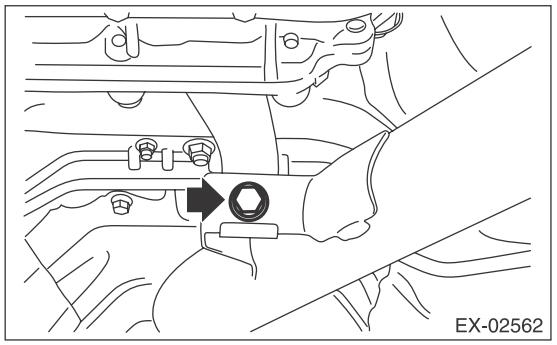

9) Remove the bolts which secure the turbocharger stay.

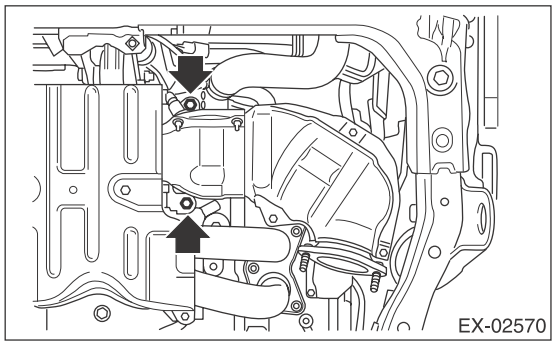

10) Remove the bolts which hold the oil catch tank stay and engine cover to the turbocharger lower stay.

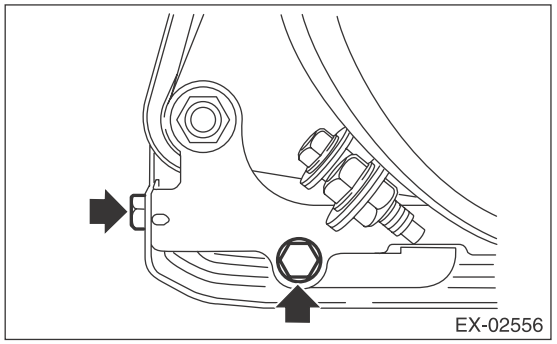

11) Remove nuts which hold center exhaust pipe (front) to the turbocharger, and remove the turbocharger lower stay (A).

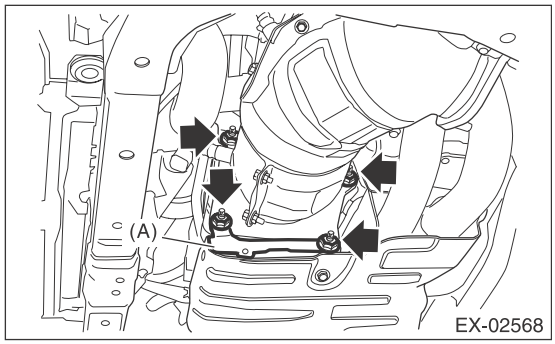

12) Using the TORX® socket E10, remove bolts from the turbocharger, and remove the center exhaust pipe (front) together with turbocharger upper stay (A).

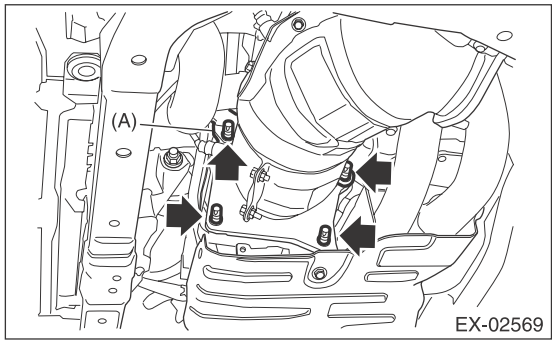

B: INSTALLATION

1) Set the center exhaust pipe (front) together with turbocharger upper stay (A), and install stud bolts to the turbocharger by using the TORX® socket E10.

NOTE:
Use a new gasket.

Tightening torque:
14.7 N·m (1.5 kgf-m, 10.8 ft-lb)

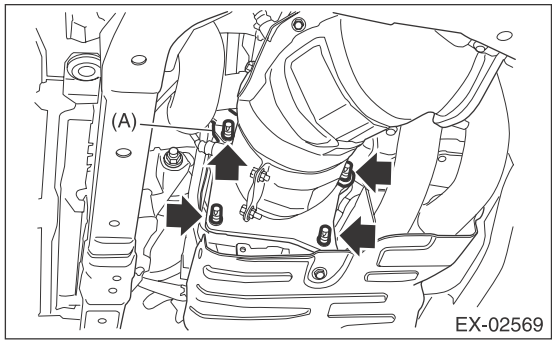

2) Install the center exhaust pipe (front) to the turbocharger together with turbocharger upper stay (A) and turbocharger lower stay (B).

NOTE:
Use a new self-locking nut.

Tightening torque:
42.5 N·m (4.3 kgf-m, 31.3 ft-lb)

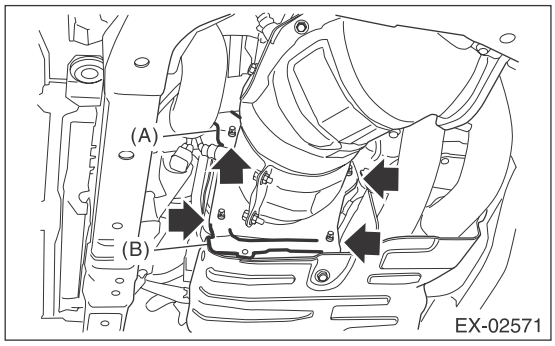

3) Install bolts which hold the oil catch tank stay and engine cover to the turbocharger lower stay.

Tightening torque:
6.4 N·m (0.7 kgf-m, 4.7 ft-lb)

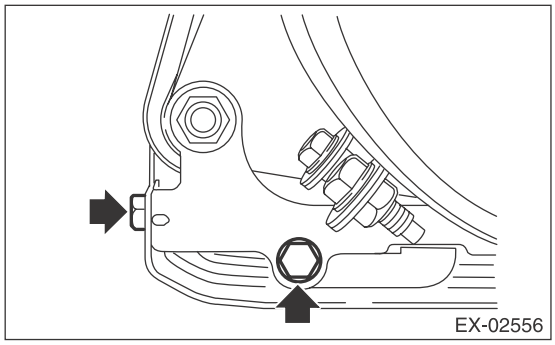

4) Attach the bolt which holds the turbocharger stay.

Tightening torque:
33 N·m (3.4 kgf-m, 24.3 ft-lb)

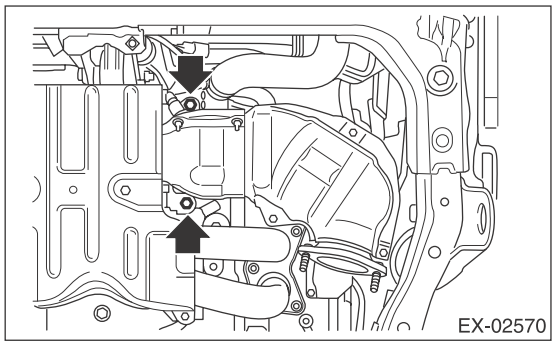

5) Install the center exhaust pipe (rear) and temporarily tighten the bolt which holds center exhaust pipe (rear) to the hanger bracket.

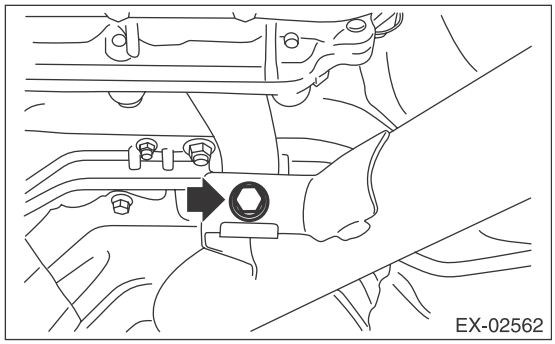

6) Install the rear exhaust pipe to the center exhaust pipe (rear).

NOTE:
Use a new gasket.

Tightening torque:
18 N·m (1.8 kgf-m, 13.3 ft-lb)

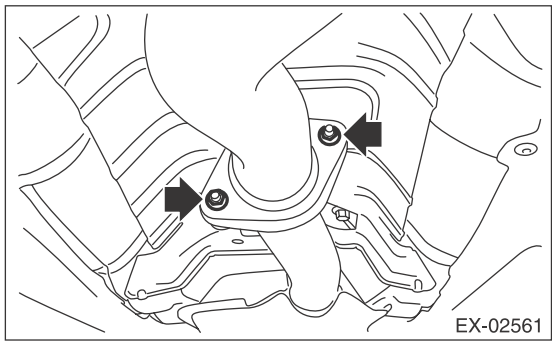

7) Install the center exhaust pipe (front) to the center exhaust pipe (rear).

NOTE:
Use a new gasket.

Tightening torque:
42.5 N·m (4.3 kgf-m, 31.3 ft-lb)

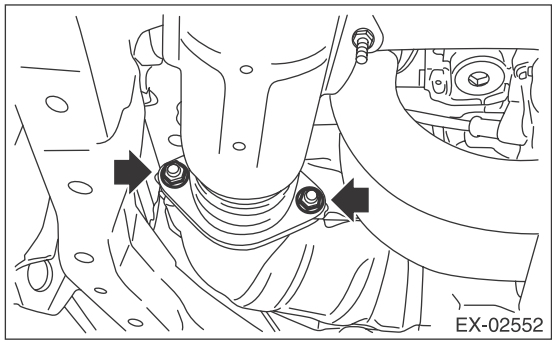

8) Tighten the bolts which hold center exhaust pipe (rear) to the hanger bracket.

Tightening torque:
35 N·m (3.6 kgf-m, 25.8 ft-lb)

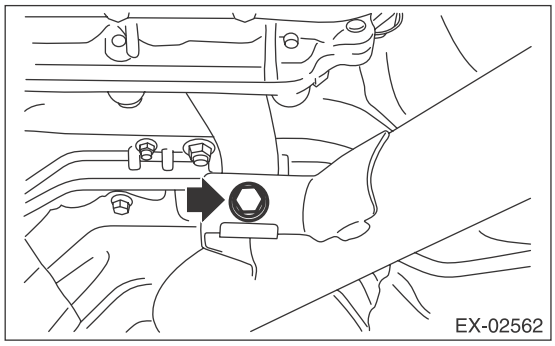

9) Install the under cover. <Ref. to EI-35, INSTALLATION, Front Under Cover.>
10) Lower the vehicle.
11) Connect connectors to the front oxygen (A/F) sensor and rear oxygen sensor, and secure the front oxygen (A/F) sensor harness and rear oxygen sensor harness with the clip (A).

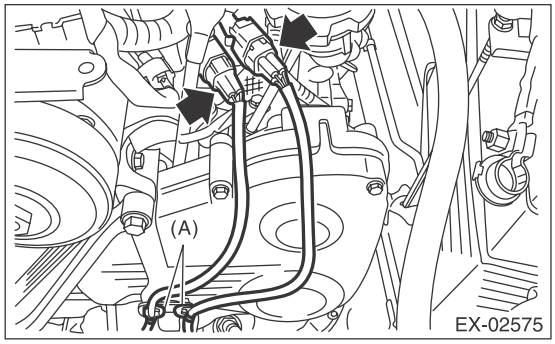

12) Connect the ground cable to battery.

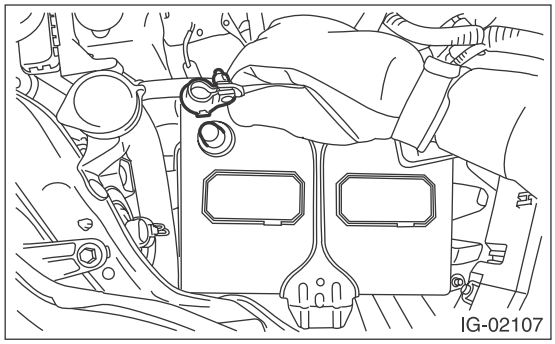

13) Install the collector cover.

C: INSPECTION

1) Check the connections and welds for exhaust leaks.
2) Make sure there are no holes or rusting.

4. Rear Exhaust Pipe

A: REMOVAL

CAUTION:
Vehicle components are extremely hot after driving. Be wary of receiving burns from heated parts.

1) Lift up the vehicle.
2) Remove the center exhaust pipe (rear) from the rear exhaust pipe.

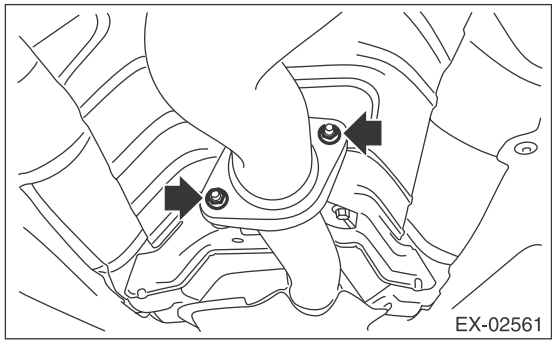

3) Remove the muffler from rear exhaust pipe.

CAUTION:
Be careful not to drop the rear exhaust pipe.

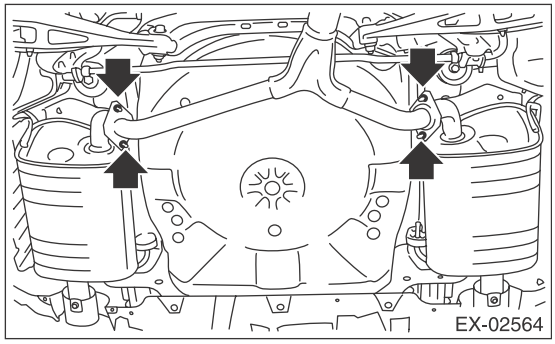

4) Apply a coat of spray type lubricant to the mating area of cushion rubber.
5) Remove the rear exhaust pipe from the cushion rubber.

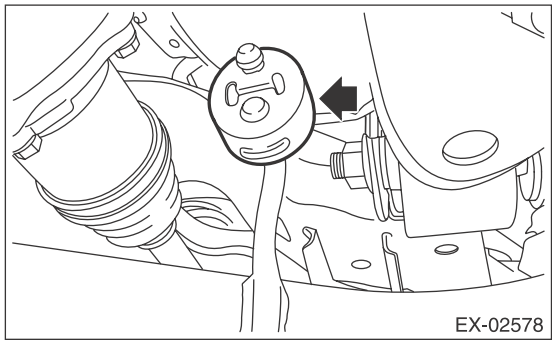

B: INSTALLATION

1) Apply a coat of spray type lubricant to the mating area of cushion rubber.
2) Install the rear exhaust pipe to the cushion rubber.

NOTE:
After assembling, degrease the lubricant which was applied to the cushion rubber while removing/installing.

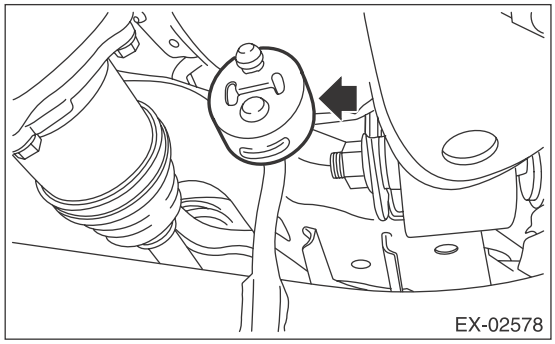

3) Install the muffler to the rear exhaust pipe.

NOTE:
Use a new gasket and self-locking nut.

Tightening torque:
48 N·m (4.9 kgf-m, 35.4 ft-lb)

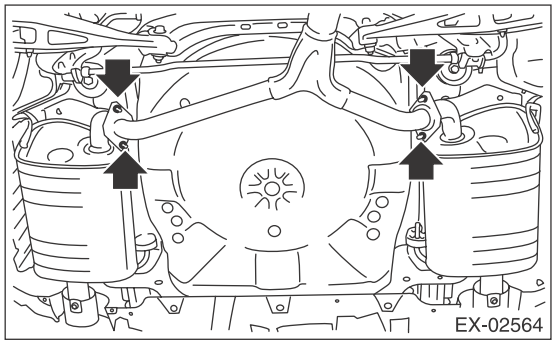

4) Install the center exhaust pipe (rear) to the rear exhaust pipe.

NOTE:
Use a new gasket.

Tightening torque:
18 N·m (1.8 kgf-m, 13.3 ft-lb)

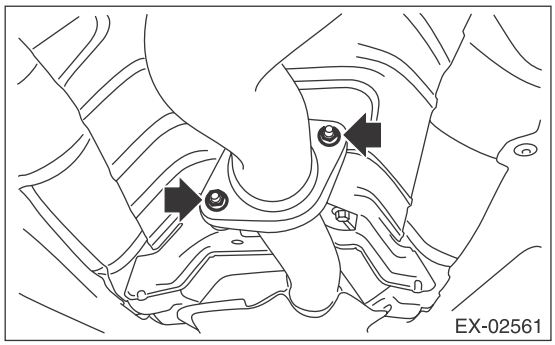

5) Lower the vehicle.

C: INSPECTION

1) Check the connections and welds for exhaust leaks.
2) Make sure there are no holes or rusting.
3) Check the cushion rubber for wear or crack.

5. Muffler

A: REMOVAL

CAUTION:
Vehicle components are extremely hot after driving. Be wary of receiving burns from heated parts.

1) Lift up the vehicle.
2) Remove the rear exhaust pipe from the muffler.

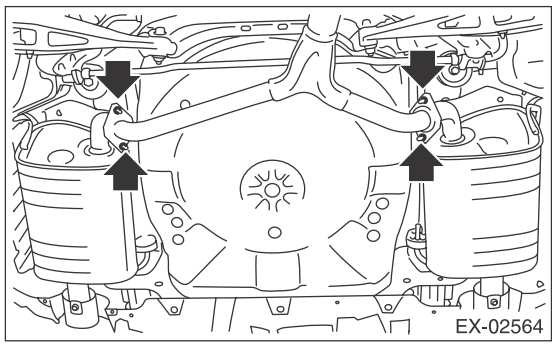

3) Apply a coat of spray type lubricant to the mating area of cushion rubber.
4) Remove the muffler from the cushion rubber.

CAUTION:
Be careful not to drop the muffler during removal.

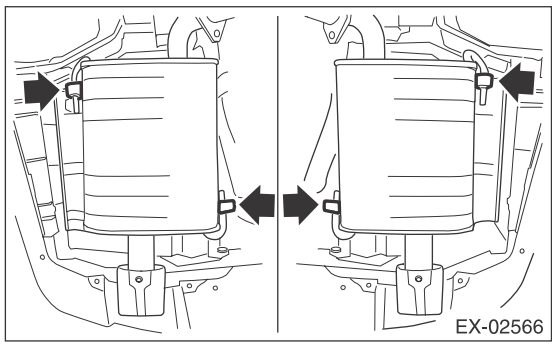

B: INSTALLATION

Install in the reverse order of removal.

NOTE:
- Use a new gasket and self-locking nut.
- After assembling, degrease the lubricant which was applied to the cushion rubber while removing/installing.

Tightening torque:
48 N·m (4.9 kgf-m, 35.4 ft-lb)

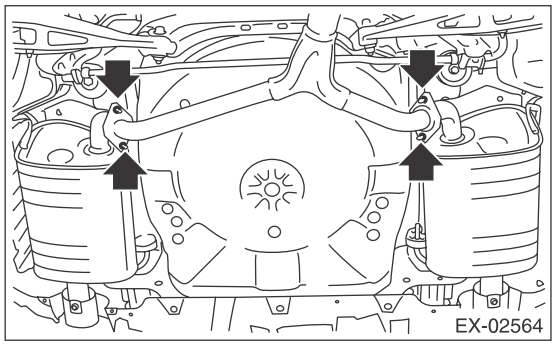

C: INSPECTION

1) Check the connections and welds for exhaust leaks.
2) Make sure there are no holes or rusting.
3) Check the cushion rubber for wear or crack.

COOLING

CO(H4DOTC)

Page

1. General Description 2
2. Radiator Fan System 7
3. Engine Coolant 14
4. Water Pump 16
5. Thermostat 19
6. Radiator 21
7. Radiator Cap 24
8. Radiator Main Fan and Fan Motor 25
9. Radiator Sub Fan and Fan Motor 27
10. Reservoir Tank 29
11. Engine Cooling System Trouble in General 30

1. General Description

A: SPECIFICATION

Cooling system				Electric fan + Forced engine coolant circulation system
Total engine coolant capacity ℓ (US qt, Imp qt)				Approx. 6.6 (7.0, 5.8)
Water pump	Type			Centrifugal impeller type
	Discharge performance	Discharge rate ℓ (US gal, Imp gal) /min.		200 (52.8, 44.0)
		Pump speed — Discharge pressure		6,000 rpm — 225.4 kPa (23.0 mAq)
		Engine coolant temperature		80°C (176°F)
	Impeller diameter mm (in)			76 (2.99)
	Number of impeller vanes			8
	Pump pulley diameter mm (in)			60 (2.36)
	Clearance between impeller and pump case mm (in)		Standard	0.5 — 1.5 (0.020 — 0.059)
Thermostat	Type			Wax pellet type
	Starting temperature to open			82 — 86°C (180 — 187°F)
	Fully opens			91°C (196°F)
	Valve lift mm (in)			9.0 (0.354) or more
	Valve bore mm (in)			35 (1.38)
Radiator fan	Motor input	Main fan W		120
		Sub fan W		120
	Fan diameter / Blade	Main fan		320 mm (12.6 in)/5
		Sub fan		320 mm (12.6 in)/7
Radiator	Type			Down flow
	Core dimensions	Width × Height × Thickness mm (in)		687.4 × 340 × 16 (27.06 × 13.39 × 0.63)
	Pressure range in which cap valve is open kPa (kg/cm^2, psi)		Positive pressure side Standard	93 — 123 (0.95 — 1.25, 14 — 18)
			Positive pressure side Service limit	83 (0.85, 12)
			Negative pressure side Standard	–1.0 — –4.9 (–0.01 — –0.05, –0.1 — –0.7)
	Fins			Corrugated fin type
Reservoir tank	Capacity ℓ (US qt, Imp qt)			0.45 (0.48, 0.40)

	Recommended materials	Item number	Alternative
Coolant	SUBARU Super Coolant (Concentrated type)	—	—
	SUBARU Super Coolant (Diluted type)	K0670Y0001	
Water for dilution	Distilled water	—	Soft water or tap water
Cooling system protecting agent	Cooling system conditioner	SOA345001	—

B: COMPONENT

1. WATER PUMP

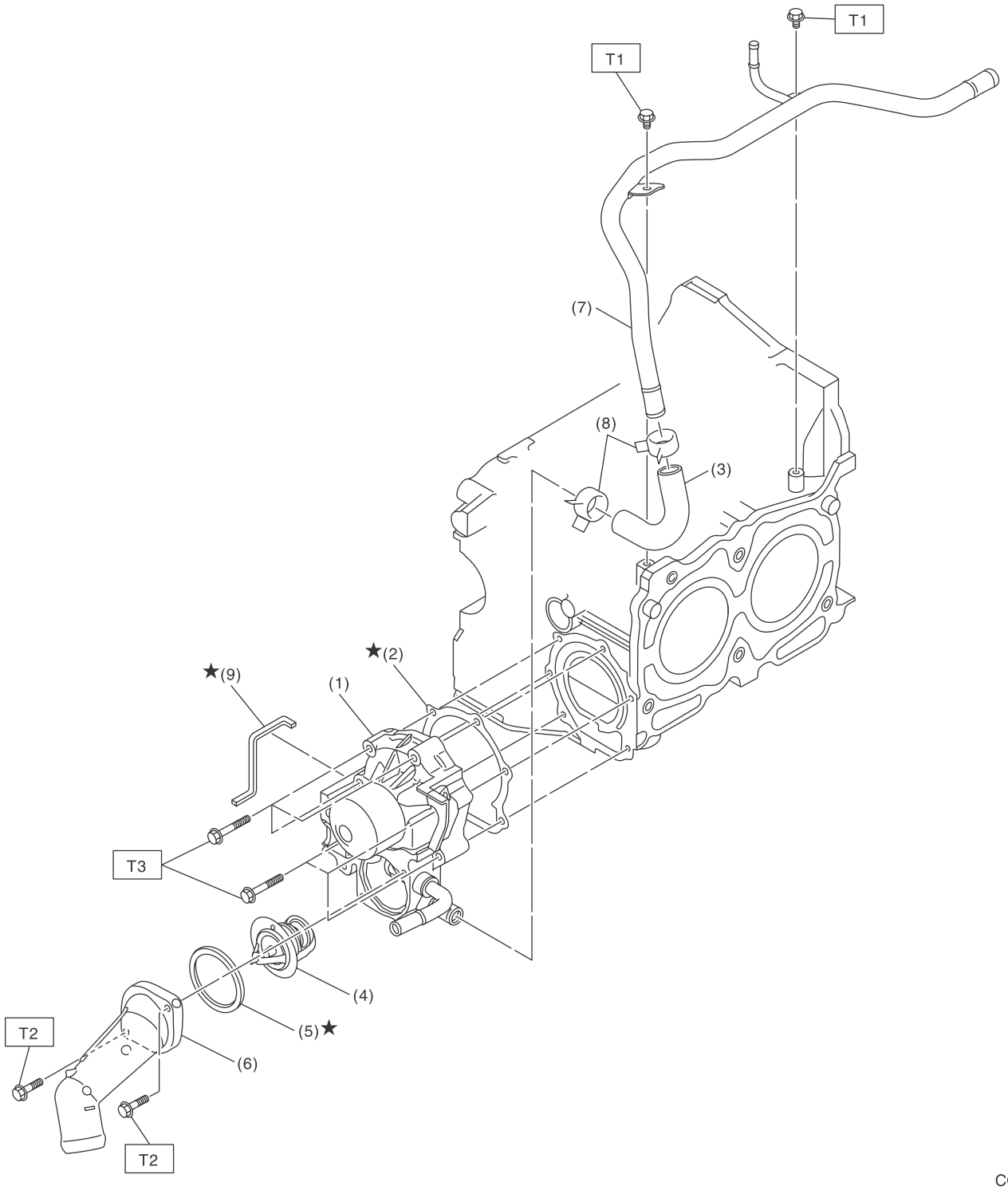

(1) Water pump ASSY
(2) Gasket
(3) Heater by-pass hose
(4) Thermostat
(5) Gasket
(6) Thermostat cover
(7) Water by-pass pipe
(8) Clip
(9) Water pump sealing

Tightening torque:N·m (kgf-m, ft-lb)
T1: 6.4 (0.7, 4.7)
T2: 9 (0.9, 6.6)
T3: First 12 (1.2, 8.9)
Second 12 (1.2, 8.9)

2. RADIATOR AND RADIATOR FAN

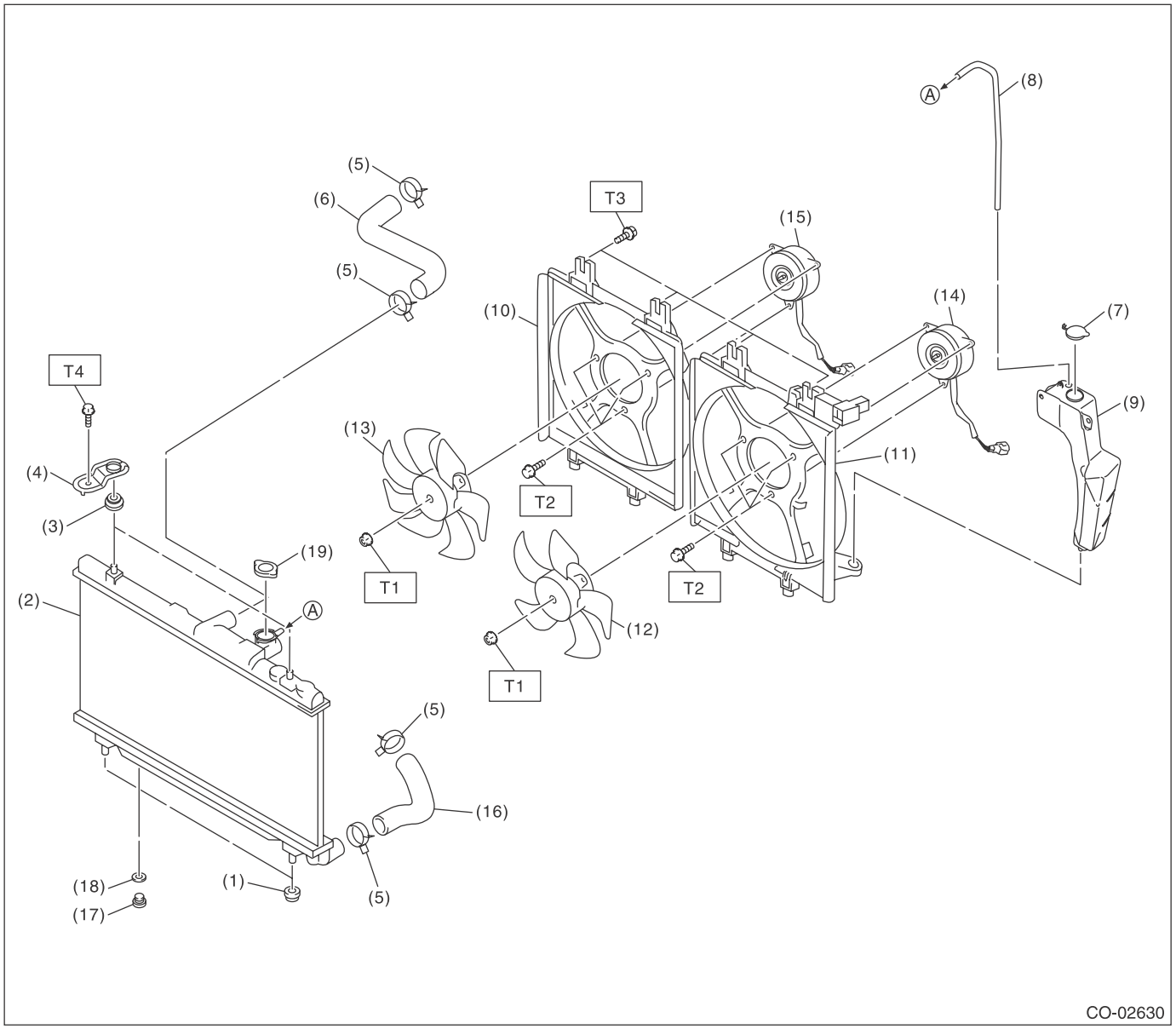

(1) Radiator lower cushion
(2) Radiator
(3) Radiator upper cushion
(4) Radiator upper bracket
(5) Clip
(6) Radiator inlet hose
(7) Engine coolant reservoir tank cap
(8) Over flow hose
(9) Engine coolant reservoir tank
(10) Radiator sub fan shroud
(11) Radiator main fan shroud
(12) Radiator main fan
(13) Radiator sub fan
(14) Main fan motor
(15) Sub fan motor
(16) Radiator outlet hose
(17) Radiator drain plug
(18) O-ring
(19) Radiator cap

Tightening torque:N·m (kgf-m, ft-lb)	
T1:	*3.4 (0.3, 2.5)*
T2:	*5 (0.5, 3.7)*
T3:	*7.5 (0.8, 5.5)*
T4:	*12 (1.2, 8.9)*

C: CAUTION

• Wear appropriate work clothing, including a cap, protective goggles and protective shoes when performing any work.
• Remove contamination including dirt and corrosion before removal, installation or disassembly.
• Keep the disassembled parts in order and protect them from dust and dirt.
• Before removal, installation or disassembly, be sure to clarify the failure. Avoid unnecessary removal, installation, disassembly and replacement.
• Vehicle components are extremely hot after driving. Be wary of receiving burns from heated parts.
• Be sure to tighten fasteners including bolts and nuts to the specified torque.
• Place shop jacks or rigid racks at the specified points.
• Before disconnecting connectors of sensors or units, be sure to disconnect the ground cable from battery.
• Prepare a container and cloth to prevent scattering of engine coolant when performing work where engine coolant can be spilled. If the fuel spills, wipe it off immediately to prevent from penetrating into floor or flowing out for environmental protection.
• Follow all government and local regulations concerning disposal of refuse when disposing engine coolant.

D: PREPARATION TOOL

1. SPECIAL TOOL

ILLUSTRATION	TOOL NUMBER	DESCRIPTION	REMARKS
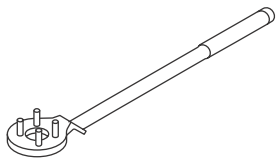 ST-499977100	499977100	CRANK PULLEY WRENCH	Used for removing and installing the crank pulley.
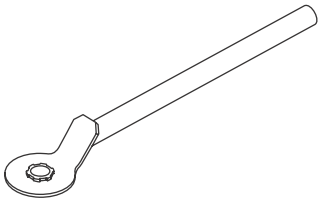 ST-499977500	499977500	CAM SPROCKET WRENCH	Used for removing and installing the intake and exhaust cam sprocket.
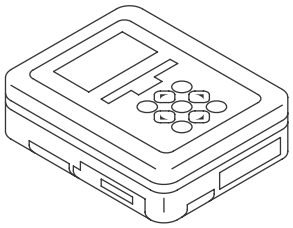 ST1B022XU0	1B022XU0	SUBARU SELECT MONITOR III KIT	Used for troubleshooting the electrical system.

2. GENERAL TOOL

TOOL NAME	REMARKS
Circuit tester	Used for measuring resistance and voltage.
Radiator cap tester	Used for checking radiator and radiator cap.

2. Radiator Fan System

A: WIRING DIAGRAM

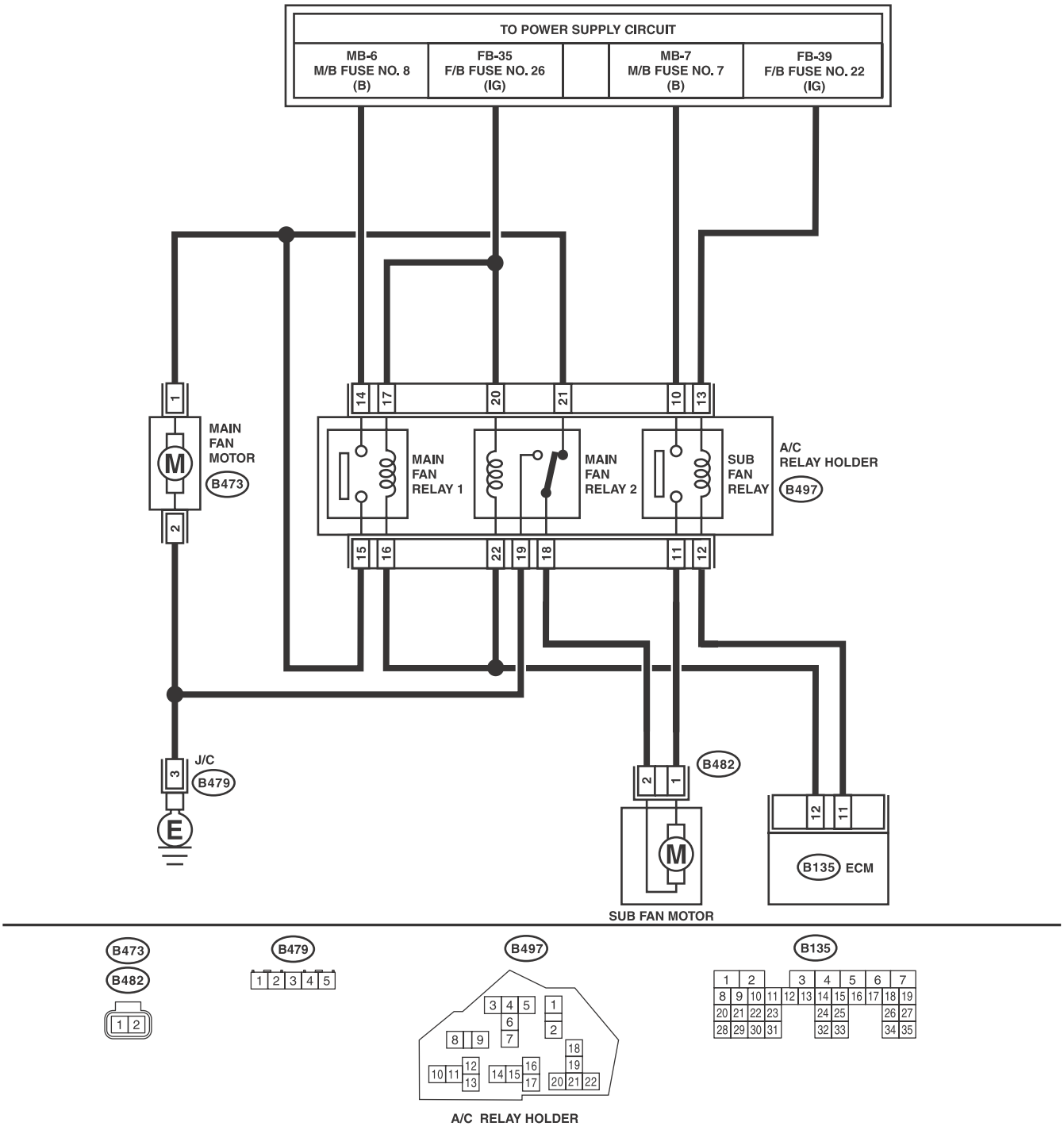

CO-02631

B: INSPECTION

Operating condition:

Radiator fan operates depending on the radiator fan operation mode related to engine coolant temperature or the radiator fan operation mode related to A/C compressor load, whichever is higher as an operation mode.

- Radiator fan operation mode related to engine coolant temperature

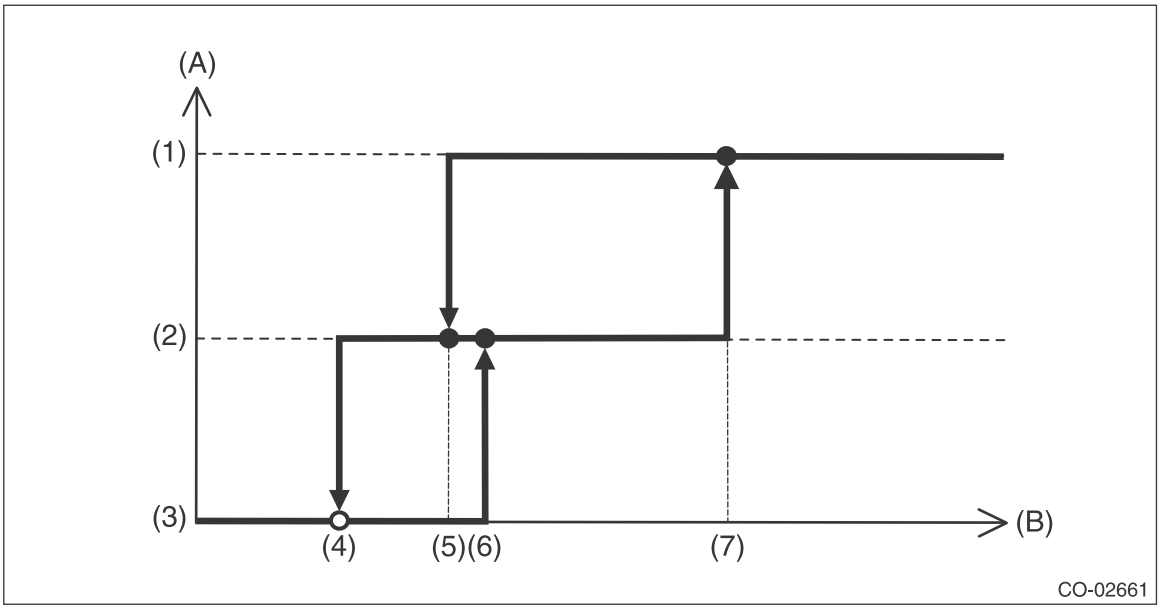

(A)	Radiator fan operation mode	(B)	Engine coolant temperature		
(1)	High-Speed	(4)	96°C (205°F)	(7)	100°C (212°F)
(2)	Low-Speed	(5)	97.5°C (207°F)		
(3)	OFF	(6)	98°C (208°F)		

- Radiator fan operation mode related to A/C compressor load

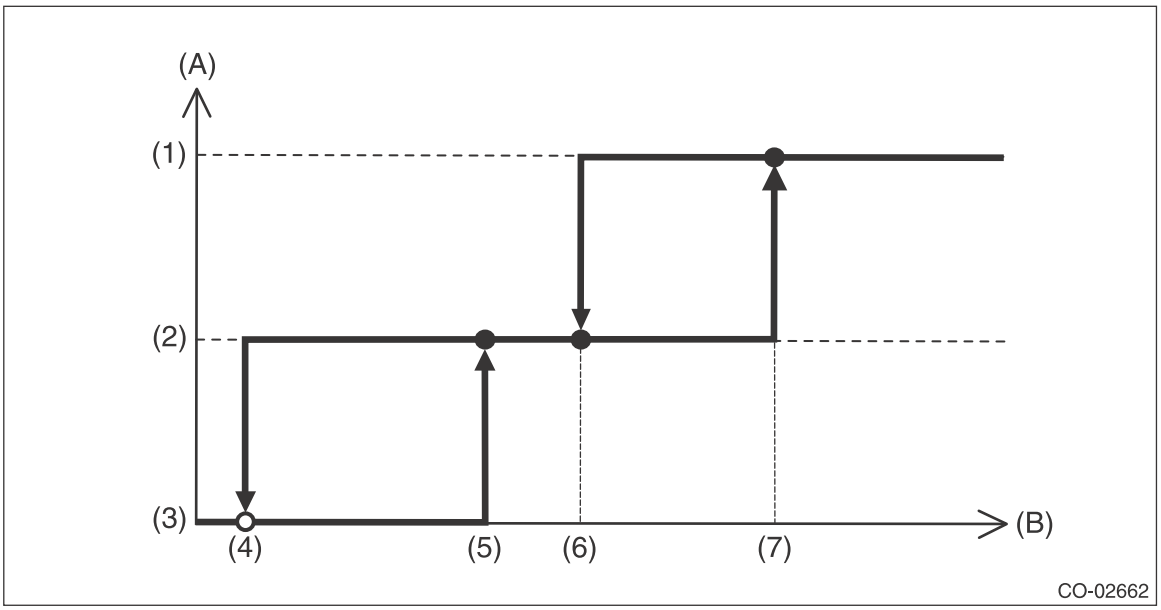

(A)	Radiator fan operation mode	(B)	A/C compressor refrigerant pressure		
(1)	High-Speed	(4)	0.8 MPa (8.16 kgf/cm^2, 116 psi)	(7)	1.5 MPa (15.30 kgf/cm^2, 218 psi)
(2)	Low-Speed	(5)	1.125 MPa (11.47 kgf/cm^2, 163 psi)		
(3)	OFF	(6)	1.25 MPa (12.75 kgf/cm^2, 181 psi)		

DIAGNOSIS:
Radiator main fan and radiator sub fans do not rotate under the above operating conditions.

	Step	Check	Yes	No
1	**CHECK OPERATION OF RADIATOR FAN.** 1) Connect the delivery mode fuse. 2) Turn the ignition switch to ON. 3) Using the Subaru Select Monitor, check the forced operation of the radiator fan relay. NOTE: • When performing a forced operation radiator fan relay check using the Subaru Select Monitor, the radiator main fan and radiator sub fan will repeat low speed revolution → high speed revolution → OFF in this order. • Subaru Select Monitor For detailed operation procedures, refer to “PC application help for Subaru Select Monitor”.	Do the radiator main fans and radiator sub fans rotate at low speed?	Go to step **2**.	Go to step **3**.

Step		Check	Yes	No
2	**CHECK OPERATION OF RADIATOR FAN.** 1) Connect the delivery mode fuse. 2) Turn the ignition switch to ON. 3) Perform the compulsory operation check for the radiator fan relay using Subaru Select Monitor. NOTE: • When performing a forced operation radiator fan relay check using the Subaru Select Monitor, the radiator main fan and radiator sub fan will repeat low speed revolution → high speed revolution → OFF in this order. • Subaru Select Monitor For detailed operation procedures, refer to "PC application help for Subaru Select Monitor".	Do the radiator main fans and radiator sub fans rotate at high speed?	Radiator main fan system is normal.	Go to step **27**.
3	**CHECK POWER SUPPLY TO SUB FAN RELAY.** 1) Turn the ignition switch to OFF. 2) Remove the sub fan relay from A/C relay holder. 3) Measure the voltage between sub fan relay connector and chassis ground. ***Connector & terminal*** ***(B497) No. 10 (+) — Chassis ground (–):***	Is the voltage 10 V or more?	Go to step **4**.	Go to step **5**.
4	**CHECK POWER SUPPLY TO SUB FAN RELAY.** 1) Turn the ignition switch to ON. 2) Measure the voltage between sub fan relay connector and chassis ground. ***Connector & terminal*** ***(B497) No. 13 (+) — Chassis ground (–):***	Is the voltage 10 V or more?	Go to step **7**.	Go to step **6**.
5	**CHECK FUSE.** 1) Turn the ignition switch to OFF. 2) Remove the fuse No. 7. 3) Check the condition of fuse.	Is the fuse blown out?	Replace the fuse.	Repair the power supply line.
6	**CHECK FUSE.** 1) Turn the ignition switch to OFF. 2) Remove the fuse No. 22. 3) Check the condition of fuse.	Is the fuse blown out?	Replace the fuse.	Repair the power supply line.
7	**CHECK SUB FAN RELAY.** 1) Turn the ignition switch to OFF. 2) Measure the resistance between sub fan relay terminals. ***Terminals*** ***No. 10 — No. 11:***	Is the resistance 1 MΩ or more?	Go to step **8**.	Replace the sub fan relay.
8	**CHECK SUB FAN RELAY.** 1) Connect the battery to terminals No. 12 and No. 13 of the sub fan relay. 2) Measure the resistance between sub fan relay terminals. ***Terminals*** ***No. 10 — No. 11:***	Is the resistance less than 1 Ω?	Go to step **9**.	Replace the sub fan relay.

Step		Check	Yes	No
9	**CHECK HARNESS BETWEEN SUB FAN RELAY CONNECTOR AND SUB FAN MOTOR CONNECTOR.** 1) Disconnect the connector from the sub fan motor. 2) Measure the resistance of harness between sub fan relay connector and sub fan motor connector. ***Connector & terminal*** ***(B482) No. 1 — (B497) No. 11:***	Is the resistance less than 1 Ω?	Go to step **10**.	Repair the open circuit of harness between sub fan relay connector and sub fan motor connector.
10	**CHECK HARNESS BETWEEN SUB FAN MOTOR CONNECTOR AND MAIN FAN RELAY 2 CONNECTOR.** 1) Remove the main fan relay 2 from A/C relay holder. 2) Measure the resistance of harness between sub fan motor connector and main fan relay 2 connector. ***Connector & terminal*** ***(B482) No. 2 — (B497) No. 18:***	Is the resistance less than 1 Ω?	Go to step **11**.	Repair the open circuit of the harness between sub fan motor connector and main fan relay 2 connector.
11	**CHECK FOR POOR CONTACT.** Check poor contact of sub fan motor connector.	Is there poor contact of the sub fan motor connector?	Repair the poor contact of sub fan motor connector.	Go to step **12**.
12	**CHECK SUB FAN MOTOR.** Connect the battery positive (+) terminal to terminal No. 1 of the sub fan motor, and the ground (–) terminal to terminal No. 2.	Does the radiator sub fan rotate?	Go to step **13**.	Replace the sub fan motor.
13	**CHECK MAIN FAN RELAY 2.** Measure the resistance between main fan relay 2 terminals. ***Terminals*** ***No. 21 — No. 18:***	Is the resistance less than 1 Ω?	Go to step **14**.	Replace the main fan relay 2.
14	**CHECK HARNESS BETWEEN MAIN FAN RELAY 2 CONNECTOR AND MAIN FAN MOTOR CONNECTOR.** 1) Disconnect the connector from the main fan motor. 2) Measure the resistance of the harness between main fan relay 2 connector and main fan motor connector. ***Connector & terminal*** ***(B473) No. 1 — (B497) No. 21:***	Is the resistance less than 1 Ω?	Go to step **15**.	Repair the open circuit of the harness between main fan relay 2 connector and main fan motor connector.
15	**CHECK MAIN FAN MOTOR AND GROUND CIRCUIT.** Measure the resistance between main fan motor connector and chassis ground. ***Connector & terminal*** ***(B473) No. 2 — Chassis ground:***	Is the resistance less than 5 Ω?	Go to step **16**.	Repair the open circuit of the harness between main fan motor connector and chassis ground or poor contact of the joint connector.
16	**CHECK FOR POOR CONTACT.** Check poor contact of main fan motor connector.	Is there poor contact of the main fan motor connector?	Repair the poor contact of main fan motor connector.	Go to step **17**.
17	**CHECK MAIN FAN MOTOR.** Connect the battery positive (+) terminal to terminal No. 1 of the main fan motor, and the ground (–) terminal to terminal No. 2.	Does the radiator main fan rotate?	Go to step **18**.	Replace the main fan motor.

	Step	Check	Yes	No
18	**CHECK HARNESS BETWEEN SUB FAN RELAY CONNECTOR AND ECM.** 1) Disconnect the connectors from ECM. 2) Measure the resistance between the sub fan relay connector and ECM connector. ***Connector & terminal*** ***(B135) No. 11 — (B497) No. 12:***	Is the resistance less than 1 Ω?	Go to step **19**.	Repair the open circuit of harness between sub fan relay connector and ECM.
19	**CHECK FOR POOR CONTACT.** Check for poor contact of ECM connector.	Is there poor contact of ECM connector?	Repair the poor contact of ECM connector.	Check the DTC. Repair the trouble cause. <Ref. to EN(H4DOTC)(diag)-43, Read Diagnostic Trouble Code (DTC).>
20	**CHECK MAIN FAN RELAY 1.** 1) Turn the ignition switch to OFF. 2) Remove the main fan relay 1 from A/C relay holder. 3) Measure the resistance between main fan relay 1 terminals. ***Terminals*** ***No. 14 — No. 15:***	Is the resistance 1 MΩ or more?	Go to step **21**.	Replace the main fan relay 1.
21	**CHECK MAIN FAN RELAY 1.** 1) Connect terminals No. 17 and No. 16 of the main fan relay 1 to the battery. 2) Measure the resistance between main fan relay 1 terminals. ***Terminals*** ***No. 14 — No. 15:***	Is the resistance less than 1 Ω?	Go to step **22**.	Replace the main fan relay 1.
22	**CHECK HARNESS BETWEEN MAIN FAN RELAY 1 CONNECTOR AND MAIN FAN MOTOR CONNECTOR.** 1) Disconnect the connector from the main fan motor. 2) Measure the resistance of the harness between main fan relay 1 connector and main fan motor connector. ***Connector & terminal*** ***(B473) No. 1 — (B497) No. 15:***	Is the resistance less than 1 Ω?	Go to step **23**.	Repair the open circuit of the harness between main fan relay 1 connector and main fan motor connector.
23	**CHECK HARNESS BETWEEN MAIN FAN RELAY 1 CONNECTOR AND ECM.** 1) Disconnect the connectors from ECM. 2) Measure the resistance between main fan relay 1 connector and ECM connector. ***Connector & terminal*** ***(B135) No. 12 — (B497) No. 16:***	Is the resistance less than 1 Ω?	Go to step **24**.	Repair the open circuit of the harness between main fan relay 1 connector and ECM.
24	**CHECK HARNESS BETWEEN MAIN FAN RELAY 2 CONNECTOR AND ECM.** Measure the resistance between main fan relay 2 connector and ECM connector. ***Connector & terminal*** ***(B135) No. 12 — (B497) No. 22:***	Is the resistance less than 1 Ω?	Go to step **25**.	Repair the open circuit of the harness between main fan relay 2 connector and ECM.
25	**CHECK FUSE.** 1) Turn the ignition switch to OFF. 2) Remove the fuse No. 8 and 26. 3) Check the condition of fuse.	Is the fuse blown out?	Replace the fuse.	Go to step **26**.
26	**CHECK FOR POOR CONTACT.** Check for poor contact of ECM connector.	Is there poor contact of ECM connector?	Repair the poor contact of ECM connector.	Repair the power supply circuit to the main fuse box.

Step		Check	Yes	No
27	**CHECK OPERATION OF RADIATOR FAN.** If the both fans do not rotate at high speed in the condition of step 2, check whether the radiator sub fan is rotating.	Does the radiator sub fan rotate?	Go to step **20**.	Go to step **28**.
28	**CHECK GROUND CIRCUIT OF MAIN FAN RELAY 2 CONNECTOR.** 1) Remove the main fan relay 2 from A/C relay holder. 2) Measure the resistance between main fan relay 2 connector and chassis ground. ***Connector & terminal*** ***(B497) No. 19 — Chassis ground:***	Is the resistance less than 1 Ω?	Go to step **29**.	Repair the open circuit of the harness between main fan relay 2 and chassis ground or poor contact of the joint connector.
29	**CHECK POWER SUPPLY TO MAIN FAN RELAY 2.** 1) Turn the ignition switch to ON. 2) Measure the voltage between main fan relay 2 connector and chassis ground. ***Connector & terminal*** ***(B497) No. 20 (+) — Chassis ground (–):***	Is the voltage 10 V or more?	Go to step **30**.	Repair the power supply line.
30	**CHECK MAIN FAN RELAY 2.** 1) Turn the ignition switch to OFF. 2) Remove the main fan relay 2. 3) Measure the resistance between main fan relay 2 terminals. ***Terminals*** ***No. 18 — No. 19:***	Is the resistance 1 MΩ or more?	Go to step **31**.	Replace the main fan relay 2.
31	**CHECK MAIN FAN RELAY 2.** 1) Connect the battery to terminals No. 20 and No. 22 of the main fan relay 2. 2) Measure the resistance between main fan relay 2 terminals. ***Terminals*** ***No. 18 — No. 19:***	Is the resistance less than 1 Ω?	Go to step **23**.	Replace the main fan relay 2.

3. Engine Coolant

A: REPLACEMENT

1. DRAINING OF ENGINE COOLANT

1) Lift up the vehicle.
2) Remove the under cover. <Ref. to EI-35, REMOVAL, Front Under Cover.>
3) Remove the drain plug to drain engine coolant into container.

NOTE:
Remove the radiator cap so that engine coolant will drain faster.

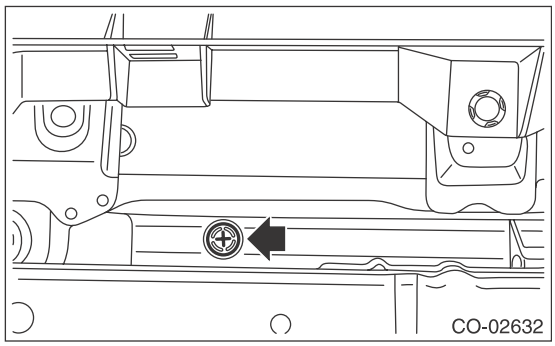

4) Install the drain plug.
5) Install the under cover. <Ref. to EI-35, INSTALLATION, Front Under Cover.>

2. FILLING OF ENGINE COOLANT

1) Pour cooling system conditioner from the filler neck of the radiator.

Cooling system protecting agent:
Refer to "SPECIFICATION" for cooling system protecting agent. <Ref. to CO(H4DOTC)-2, SPECIFICATION, General Description.>

2) Pour engine coolant into the radiator up to the filler neck position.

Recommended engine coolant:
Refer to "SPECIFICATION" for recommended engine coolant. <Ref. to CO(H4DOTC)-2, SPECIFICATION, General Description.>

Engine coolant level:
Refer to "SPECIFICATION" for engine coolant level. <Ref. to CO(H4DOTC)-2, SPECIFICATION, General Description.>

Engine coolant concentration:
Refer to "ADJUSTMENT" for the recommended engine coolant concentration. <Ref. to CO(H4DOTC)-15, ADJUSTMENT, Engine Coolant.>

NOTE:
The SUBARU Super Coolant is especially made for SUBARU engine, which has an aluminum cylinder block, and contains anti-freeze and anti-rust agents. Always use SUBARU Super Coolant, since other coolant may cause corrosion.
3) Fill engine coolant into the reservoir tank up to "FULL" level.

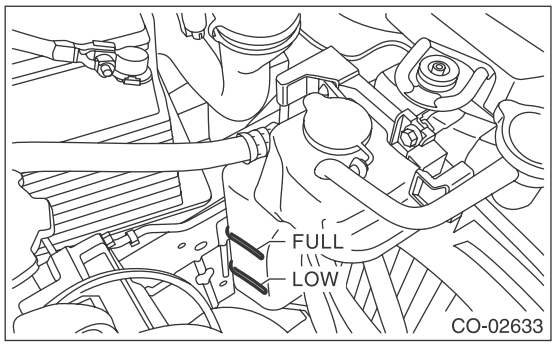

4) Close the radiator cap and start the engine. Race 5 to 6 times at 3,000 rpm or less, then stop the engine. (Complete this operation within 40 seconds.)
5) Wait for one minute after the engine stops, and open the radiator cap. If the engine coolant level drops, add engine coolant into radiator up to the filler neck position.
6) Perform the procedures 4) and 5) again.
7) Attach the radiator cap and reservoir tank cap properly.
8) Start the engine and operate the heater at maximum hot position and the blower speed setting to "LO".
9) Run the engine at 2,000 rpm or less until radiator fan starts and stops.

NOTE:
Be careful with the engine coolant temperature gauge to prevent overheating.
10) Stop the engine and wait until the engine coolant temperature lowers to 30°C (86°F) or less.
11) Open the radiator cap. If the engine coolant level drops, add engine coolant into radiator up to the filler neck position and reservoir tank to the "FULL" level.
12) Attach the radiator cap and reservoir tank cap properly.
13) Set the heater setting to maximum hot position and the blower speed setting to "LO" and start the engine. Perform racing at 3,000 rpm or less. If the flowing sound is heard from heater core, repeat the procedures from step 9).

B: ADJUSTMENT

1. PROCEDURE TO ADJUST THE SUBARU SUPER COOLANT CONCENTRATION

CAUTION:
SUBARU Super Coolant concentration must be used from 50 to 60% to assure the best performance of the anti-freeze and anti-rust agents.
To adjust the concentration of SUBARU Super Coolant according to temperature, find the proper SUBARU Super Coolant concentration in the table, and add diluting water to the SUBARU Super Coolant (concentrated type) until it reaches the proper dilution.

Relationship of SUBARU Super Coolant concentration and freezing temperature			
SUBARU Super Coolant concentration	50%	55%	60%
Freezing temperature	–36°C (–33°F)	–41°C (–42°F)	–50°C (–58°F)

Recommended engine coolant and water for dilution:
Refer to "SPECIFICATION" for the recommended engine coolant and diluting water. <Ref. to CO(H4DOTC)-2, SPECIFICATION, General Description.>

4. Water Pump

A: REMOVAL

1) Remove the collector cover.
2) Remove the radiator. <Ref. to CO(H4DOTC)-21, REMOVAL, Radiator.>
3) Remove the V-belts. <Ref. to ME(H4DOTC)-42, REMOVAL, V-belt.>
4) Remove the crank pulley. <Ref. to ME(H4DOTC)-44, REMOVAL, Crank Pulley.>
5) Remove the timing belt cover. <Ref. to ME(H4DOTC)-46, REMOVAL, Timing Belt Cover.>
6) Remove the timing belt. <Ref. to ME(H4DOTC)-51, REMOVAL, Timing Belt.>
7) Remove the automatic belt tension adjuster (A).
8) Remove the belt idler (B).
9) Remove the belt idler No. 2 (C).

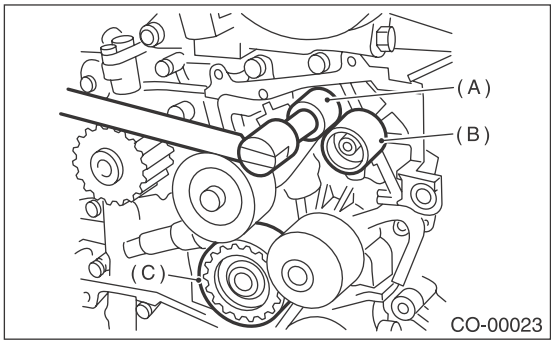

10) Remove the cam sprocket LH. <Ref. to ME(H4DOTC)-60, REMOVAL, Cam Sprocket.>
11) Remove the belt cover No. 2 LH.

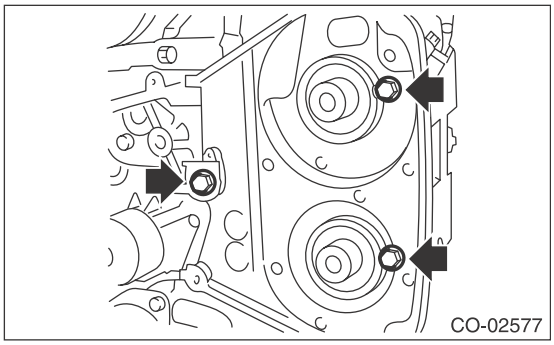

12) Remove the tensioner bracket.

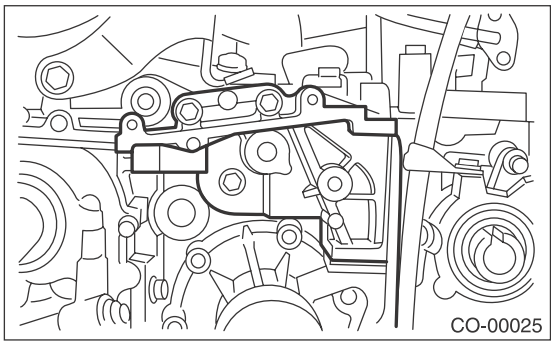

13) Disconnect the hose from water pump.
14) Remove the water pump.

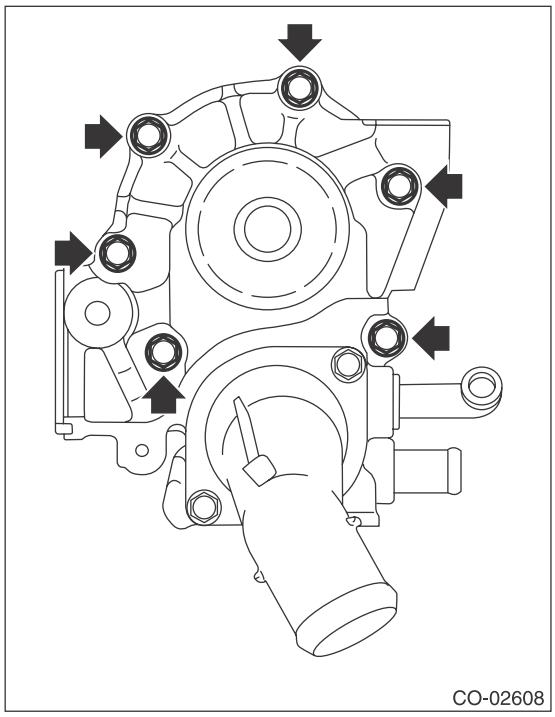

B: INSTALLATION

1) Install the water pump onto cylinder block LH.

NOTE:
- Use a new gasket.
- Use new water pump sealing.
- When installing the water pump, tighten bolts in two stages in alphabetical order as shown in the figure.

Tightening torque:
First:
12 N·m (1.2 kgf-m, 8.9 ft-lb)
Second:
12 N·m (1.2 kgf-m, 8.9 ft-lb)

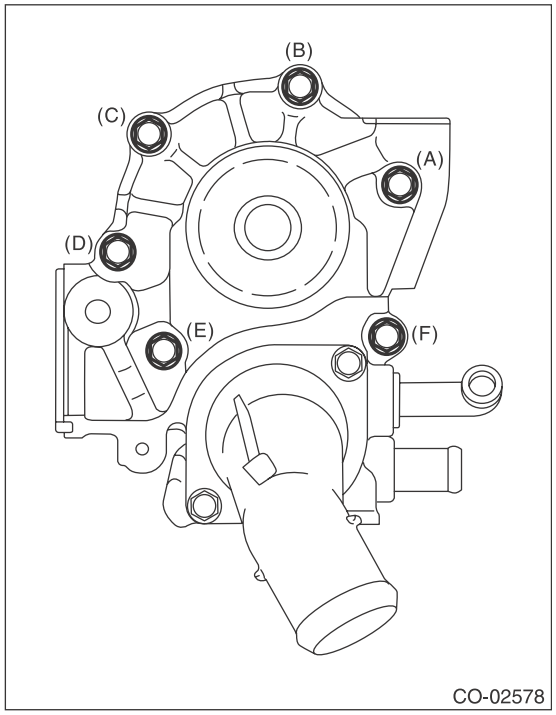

2) Install the hose to water pump.
3) Install the tensioner bracket.

Tightening torque:
24.5 N·m (2.5 kgf-m, 18.1 ft-lb)

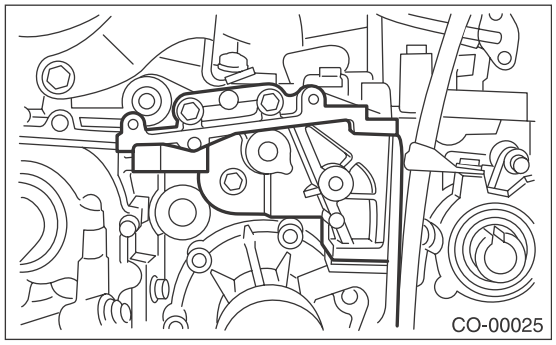

4) Install the belt cover No. 2 LH.

Tightening torque:
5 N·m (0.5 kgf-m, 3.7 ft-lb)

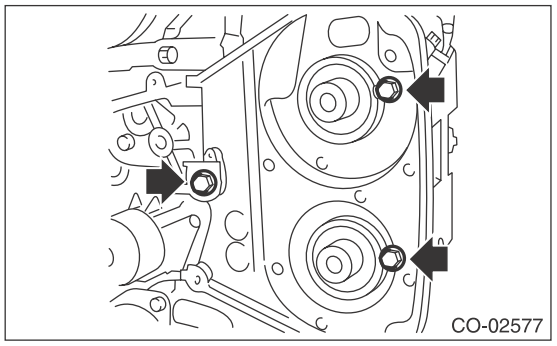

5) Install the cam sprocket LH. <Ref. to ME(H4DOTC)-60, INSTALLATION, Cam Sprocket.>
6) Install the belt idler No. 2 (C).

Tightening torque:
39 N·m (4.0 kgf-m, 28.8 ft-lb)
7) Install the belt idler (B).

Tightening torque:
25 N·m (2.5 kgf-m, 18.4 ft-lb)
8) Install the automatic belt tension adjuster (A) with the tension rod held by a pin. <Ref. to ME(H4DOTC)-53, AUTOMATIC BELT TENSION ADJUSTER ASSEMBLY AND BELT IDLER, INSTALLATION, Timing Belt.>

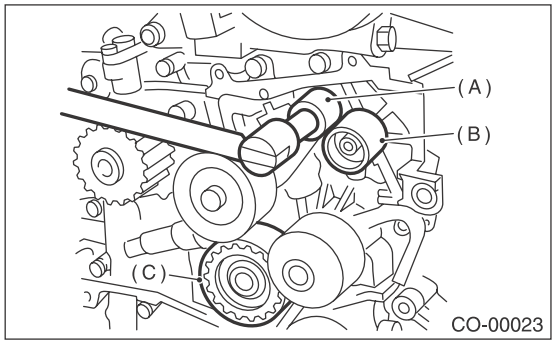

9) Install the timing belt. <Ref. to ME(H4DOTC)-54, TIMING BELT, INSTALLATION, Timing Belt.>
10) Install the timing belt cover. <Ref. to ME(H4DOTC)-49, INSTALLATION, Timing Belt Cover.>
11) Install the crank pulley. <Ref. to ME(H4DOTC)-44, INSTALLATION, Crank Pulley.>
12) Install the V-belts. <Ref. to ME(H4DOTC)-42, INSTALLATION, V-belt.>
13) Install the radiator. <Ref. to CO(H4DOTC)-22, INSTALLATION, Radiator.>
14) Install the collector cover.

C: INSPECTION

1) Check the water pump bearing for smooth rotation.
2) Check the water pump pulley for abnormalities.
3) Make sure the impeller is not abnormally deformed or damaged.
4) Inspect the clearance between impeller and pump case.

Clearance between impeller and pump case:
Standard
0.5 — 1.5 mm (0.020 — 0.059 in)

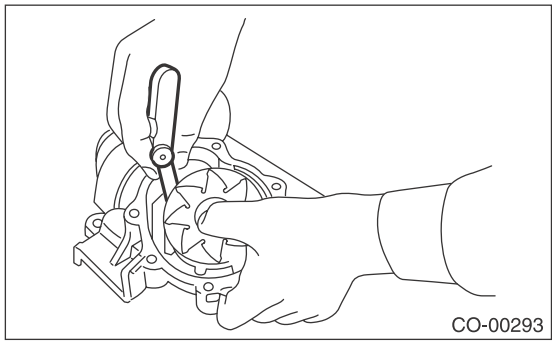

5) After water pump installation, check pulley shaft for engine coolant leaks or noise. If leaks or noise are noted, replace the water pump assembly.

5. Thermostat

A: REMOVAL

1) Lift up the vehicle.
2) Remove the under cover. <Ref. to EI-35, REMOVAL, Front Under Cover.>
3) Drain engine coolant. <Ref. to CO(H4DOTC)-14, DRAINING OF ENGINE COOLANT, REPLACEMENT, Engine Coolant.>
4) Disconnect the radiator outlet hose from thermostat cover.

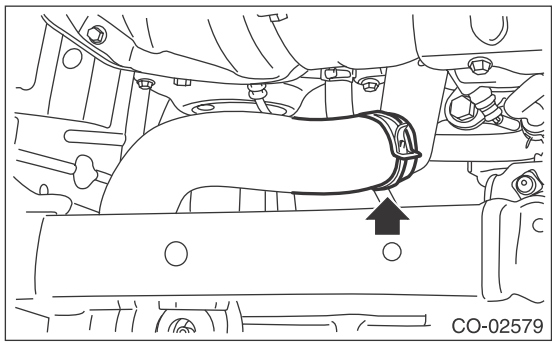

5) Remove the thermostat cover, and then remove the gasket and thermostat.

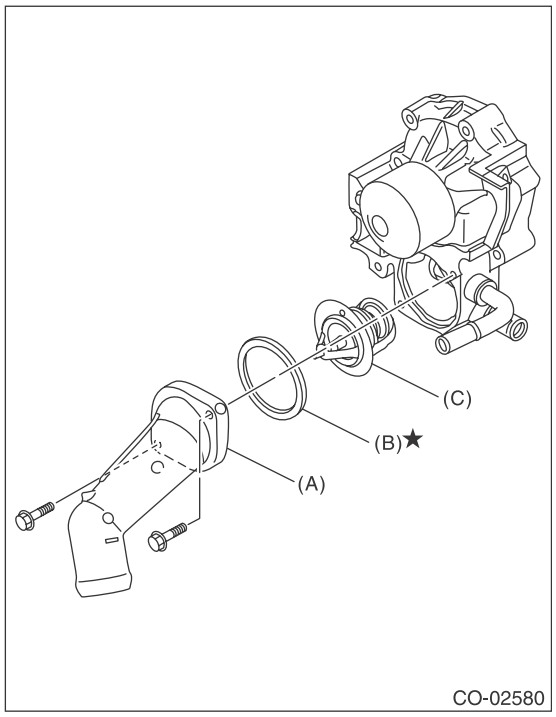

(A) Thermostat cover
(B) Gasket
(C) Thermostat

B: INSTALLATION

1) Install a gasket to thermostat.

NOTE:
Use a new gasket.
2) Install the thermostat and thermostat cover.

NOTE:
Install the parts with the jiggle pin facing upside.

Tightening torque:
9 N·m (0.9 kgf-m, 6.6 ft-lb)

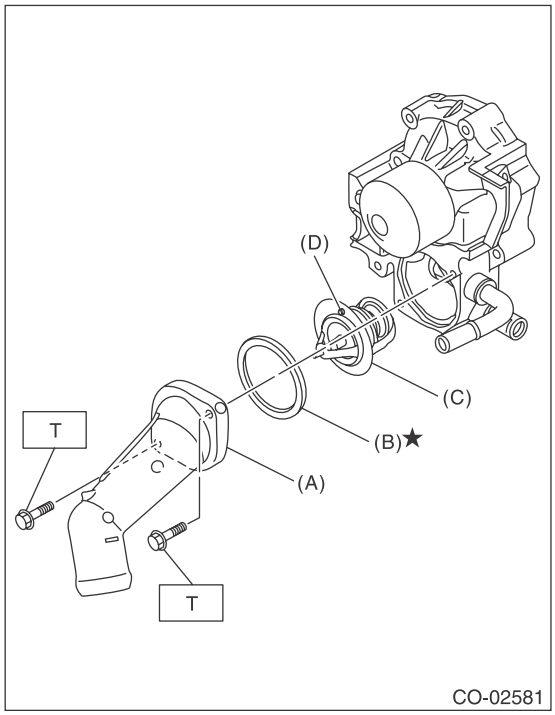

(A) Thermostat cover
(B) Gasket
(C) Thermostat
(D) Jiggle pin

3) Connect the radiator outlet hose to thermostat cover.
4) Install the under cover. <Ref. to EI-35, INSTALLATION, Front Under Cover.>
5) Lower the vehicle.
6) Fill engine coolant. <Ref. to CO(H4DOTC)-14, FILLING OF ENGINE COOLANT, REPLACEMENT, Engine Coolant.>

C: INSPECTION

1) Check that the thermostat does not have deformation, cracks or damage.
2) Check that the thermostat valve closes completely at an ambient temperature.
3) Immerse the thermostat and a thermometer in water. Raise water temperature gradually, and check the temperature and valve lift when the valve begins to open and when the valve is fully opened. Replace the thermostat if faulty.

NOTE:
• During the test, agitate the water for even temperature distribution.
• Leave the thermostat in the boiling water for five minutes or more before measuring the valve lift.
• Hold the thermostat with a wire or the like to avoid contacting the container.

Starting temperature to open:
82 — 86°C (180 — 187°F)

Full open temperature:
91°C (196°F)

Total valve lift:
9.0 mm (0.354 in) or more

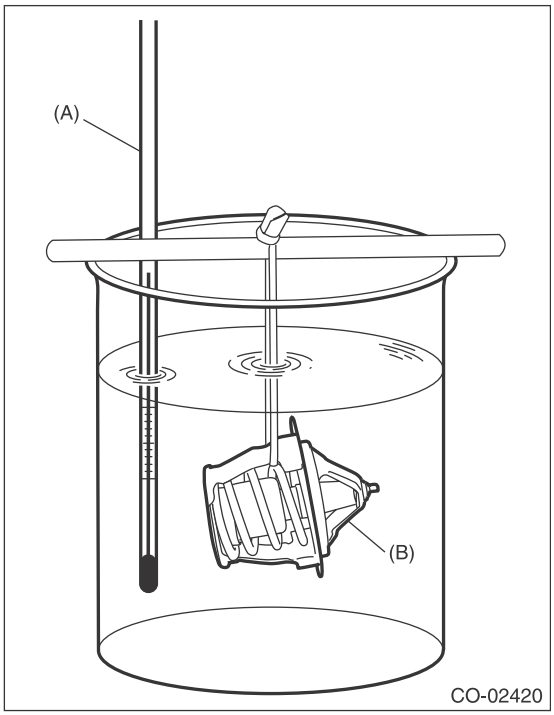

(A) Thermometer
(B) Thermostat

6. Radiator

A: REMOVAL

CAUTION:
The radiator is pressurized when the engine and radiator are hot. Wait until engine and radiator cools down before working on the radiator.

1) Remove the collector cover.
2) Disconnect the ground cable from battery.

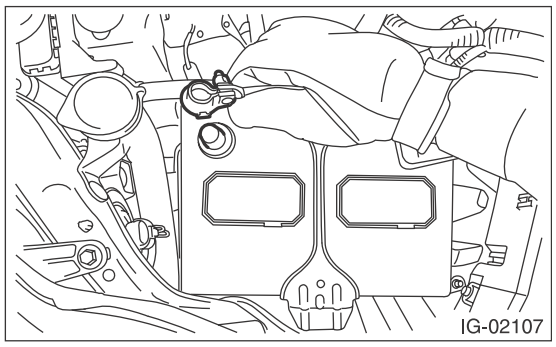

3) Lift up the vehicle.
4) Remove the under cover. <Ref. to EI-35, REMOVAL, Front Under Cover.>
5) Drain engine coolant. <Ref. to CO(H4DOTC)-14, DRAINING OF ENGINE COOLANT, REPLACEMENT, Engine Coolant.>
6) Disconnect the radiator outlet hose from thermostat cover.

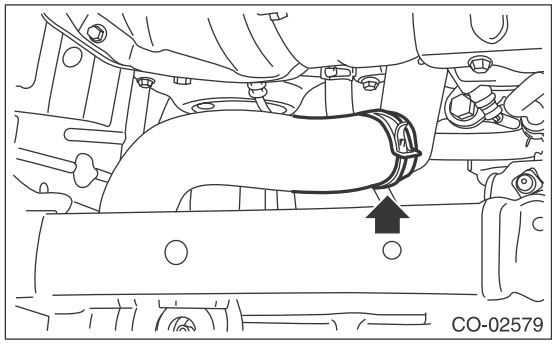

7) Lower the vehicle.
8) Remove the air intake duct. <Ref. to IN(H4DOTC)-12, REMOVAL, Air Intake Duct.>
9) Remove the reservoir tank. <Ref. to CO(H4DOTC)-29, REMOVAL, Reservoir Tank.>
10) Disconnect the connectors of main fan motor connector (A) and sub fan motor connector (B).

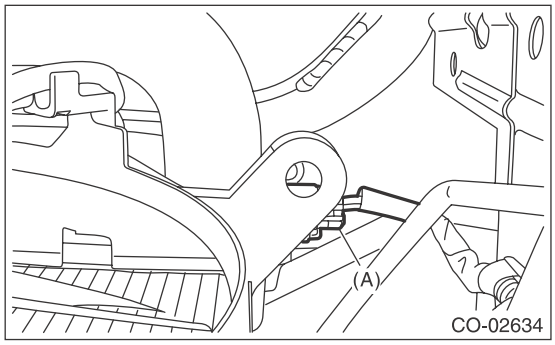

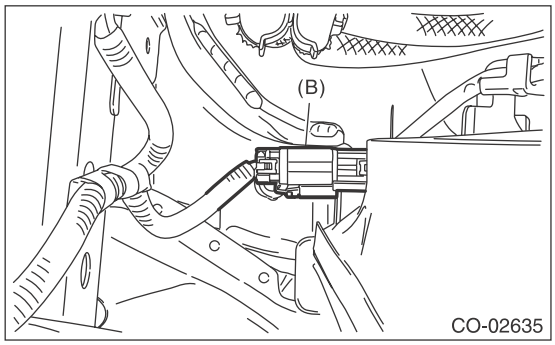

11) Disconnect the radiator inlet hose from the water tank pipe.

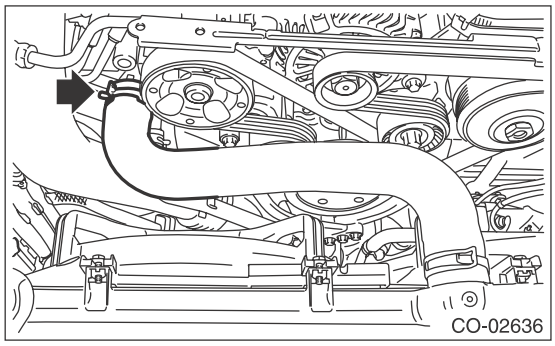

12) Remove the grille bracket.

NOTE:
Remove ten clips when removing the grille bracket.

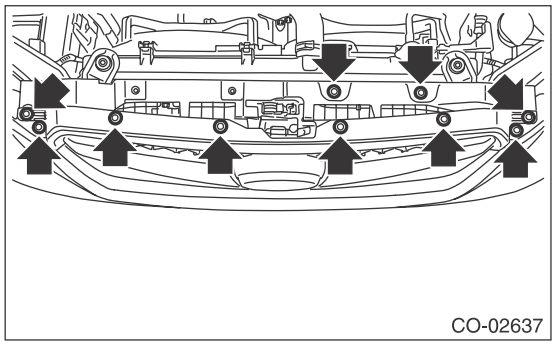

13) Remove the radiator upper brackets.

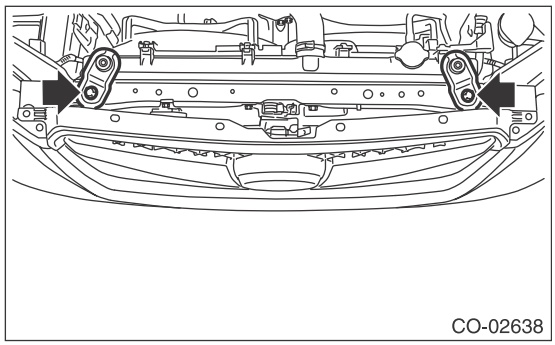

14) Lift the radiator up and remove the radiator from vehicle.
15) Remove the radiator lower cushion from the vehicle body.

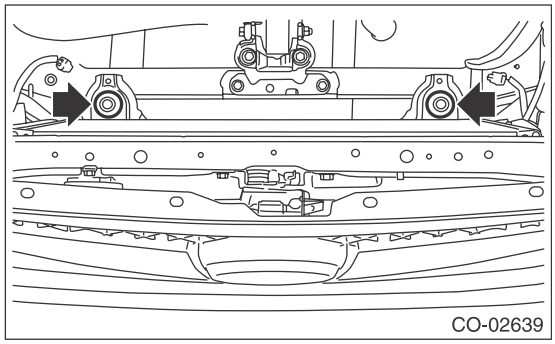

B: INSTALLATION

1) Install the radiator lower cushion to the vehicle body.

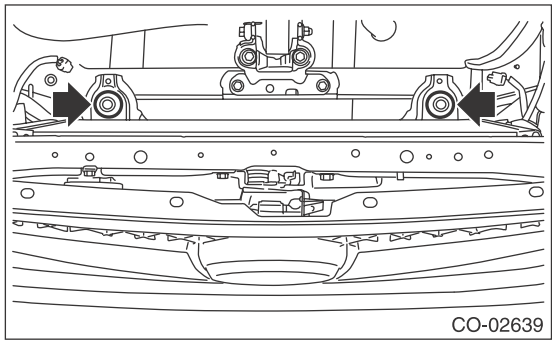

2) Install the radiator to the vehicle.

NOTE:
Insert the pin on the lower side of radiator into the radiator lower cushion.

3) Install the radiator upper brackets.

Tightening torque:
12 N·m (1.2 kgf-m, 8.9 ft-lb)

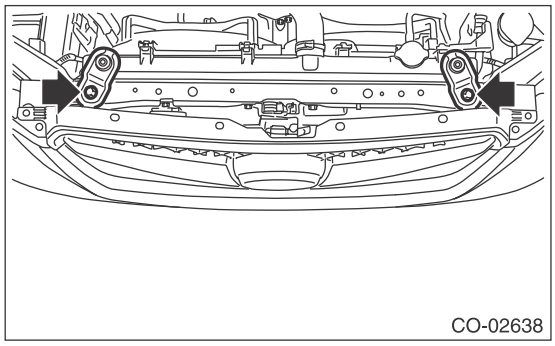

4) Attach the grille bracket.

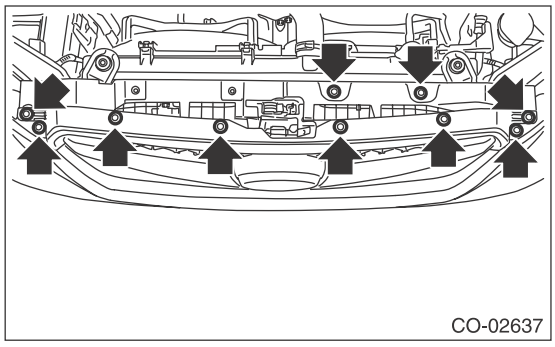

5) Connect the radiator inlet hose.

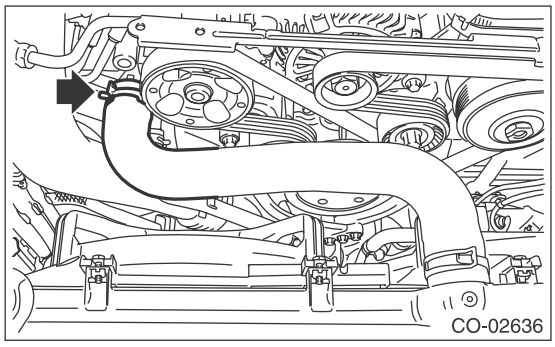

6) Connect the connectors of main fan motor connector (A) and sub fan motor connector (B).

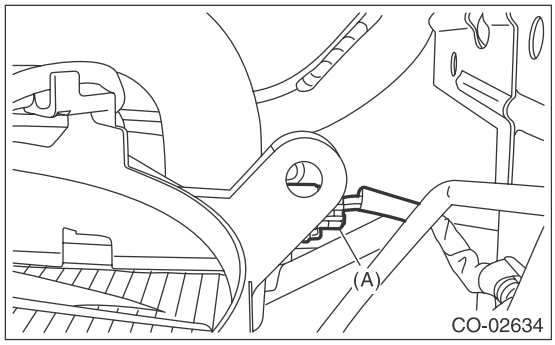

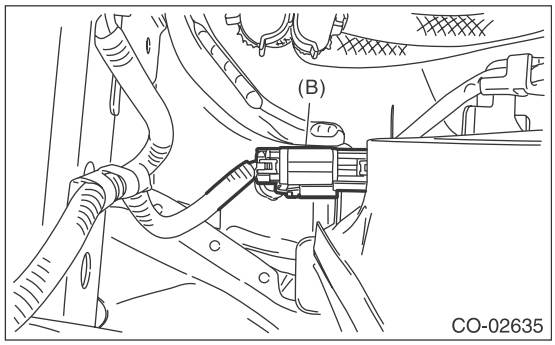

7) Install the reservoir tank. <Ref. to CO(H4DOTC)-29, INSTALLATION, Reservoir Tank.>
8) Install the air intake duct. <Ref. to IN(H4DOTC)-12, INSTALLATION, Air Intake Duct.>
9) Lift up the vehicle.
10) Connect the radiator outlet hose.

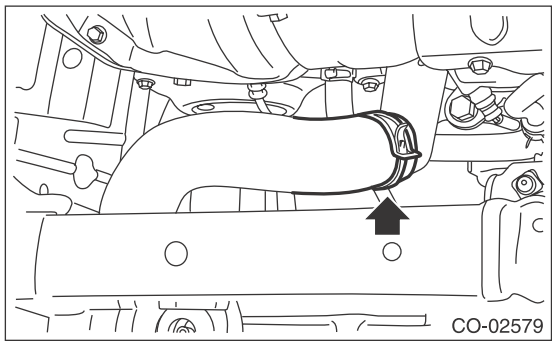

11) Install the under cover. <Ref. to EI-35, INSTALLATION, Front Under Cover.>
12) Lower the vehicle.
13) Connect the ground cable to battery.

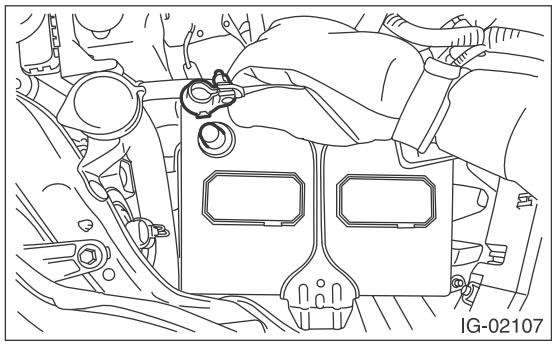

14) Fill engine coolant. <Ref. to CO(H4DOTC)-14, FILLING OF ENGINE COOLANT, REPLACEMENT, Engine Coolant.>
15) Install the collector cover.

C: INSPECTION

1) Check that the radiator does not have deformation, cracks or damage.
2) Check that the hose has no cracks, damage or loose part.
3) Remove the radiator cap, fill the radiator with engine coolant, and then install the radiator cap tester to the filler neck of radiator.

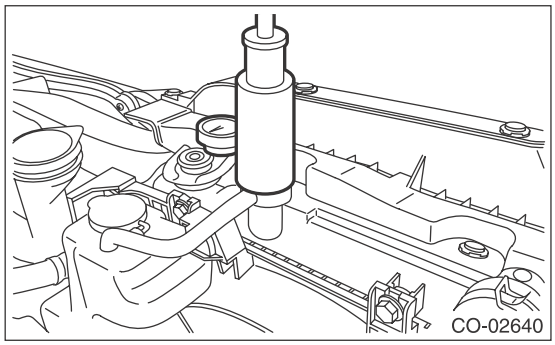

4) Apply a pressure of 157 kPa (1.6 kg/cm^2, 23 psi) to the radiator and check the following points:
- Leakage from the radiator or its vicinity
- Leakage from the hose or its connections

CAUTION:
- **Engine should be turned off.**
- **Wipe engine coolant from check points in advance.**
- **Be careful of the spurt of engine coolant when removing the radiator cap tester.**
- **Be careful not to deform the filler neck of radiator when installing and removing the radiator cap tester.**

7. Radiator Cap

A: INSPECTION

1) Check that the radiator cap does not have deformation, cracks or damage.
2) Attach the radiator cap tester to radiator cap.

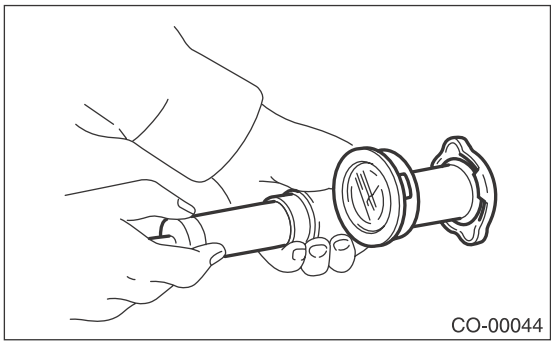

3) Increase pressure until the radiator cap tester gauge needle stops. Radiator cap is functioning properly if it holds the service limit pressure for 5 — 6 seconds. Replace the radiator cap if its valve opens at less than the service limit.

Standard:
93 — 123 kPa (0.95 — 1.25 kgf/cm^2, 14 — 18 psi)

Service limit:
83 kPa (0.85 kgf/cm^2, 12 psi)

CAUTION:
Be sure to remove foreign matter and rust from the cap in advance. Otherwise, results of pressure test will be incorrect.

8. Radiator Main Fan and Fan Motor

A: REMOVAL

1) Remove the collector cover.
2) Disconnect the ground cable from battery.

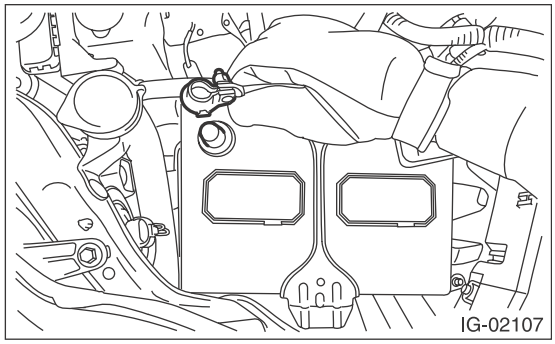

3) Remove the reservoir tank. <Ref. to CO(H4DOTC)-29, REMOVAL, Reservoir Tank.>
4) Disconnect the main fan motor connector (A).

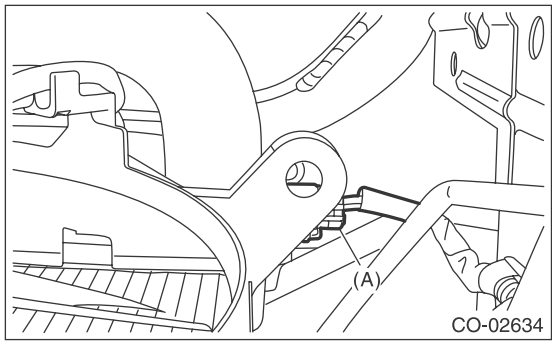

5) Remove the bolts that secure the radiator main fan motor assembly.

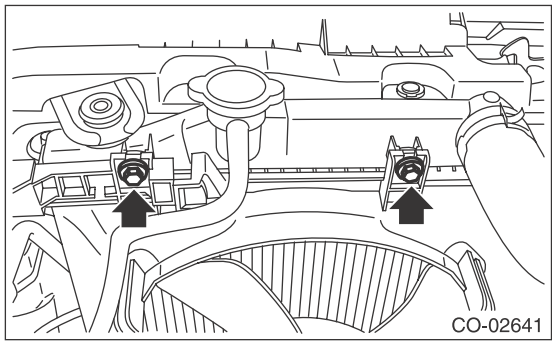

6) Remove the radiator main fan motor assembly from the upper side of the vehicle.

B: INSTALLATION

Install in the reverse order of removal.

CAUTION:
Confirm that the radiator hose is securely connected.

Tightening torque:
7.5 N·m (0.8 kgf-m, 5.5 ft-lb)

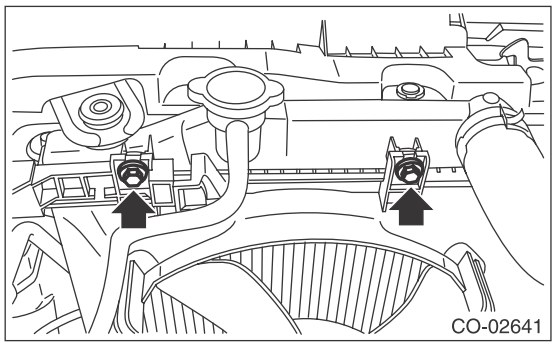

C: DISASSEMBLY

1) Remove the main fan motor connector and main fan motor harness from the radiator main fan shroud.
2) Remove the radiator main fan from the main fan motor.

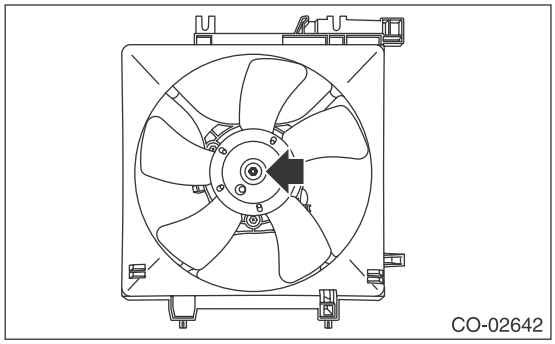

3) Remove the main fan motor from the radiator main fan shroud.

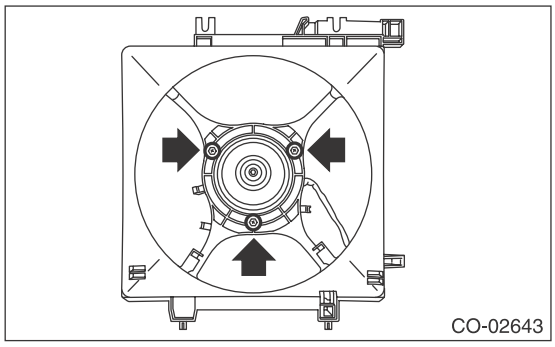

D: ASSEMBLY

Assemble in the reverse order of disassembly.

Tightening torque:
5 N·m (0.5 kgf-m, 3.7 ft-lb)

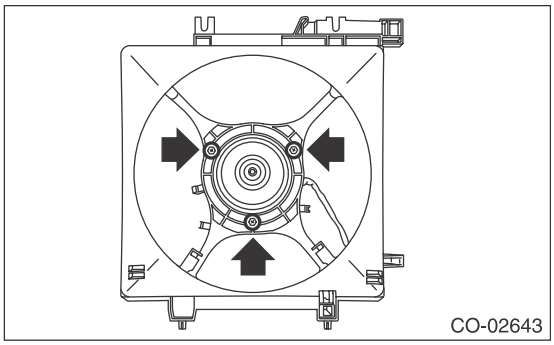

Tightening torque:
3.4 N·m (0.3 kgf-m, 2.5 ft-lb)

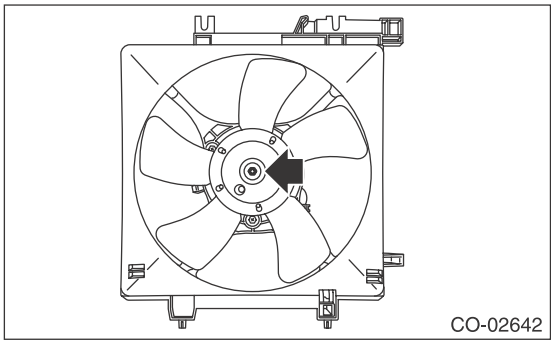

E: INSPECTION

Check that the radiator main fan, radiator main fan shroud and main fan motor do not have deformation, cracks or damage.

9. Radiator Sub Fan and Fan Motor

A: REMOVAL

1) Remove the collector cover.
2) Disconnect the ground cable from battery.

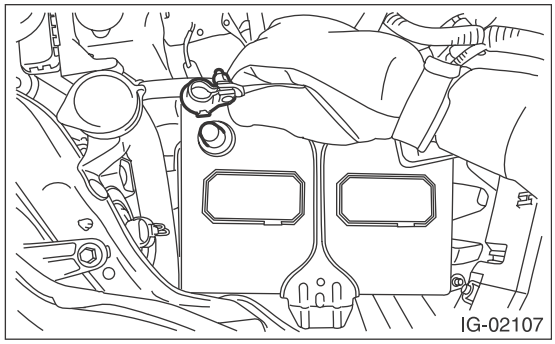

3) Remove the air intake duct. <Ref. to IN(H4DOTC)-12, REMOVAL, Air Intake Duct.>
4) Disconnect the sub fan motor connector (B).

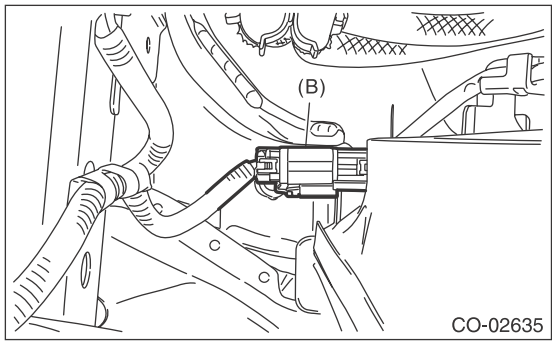

5) Remove the bolts that secure the radiator sub fan motor assembly.

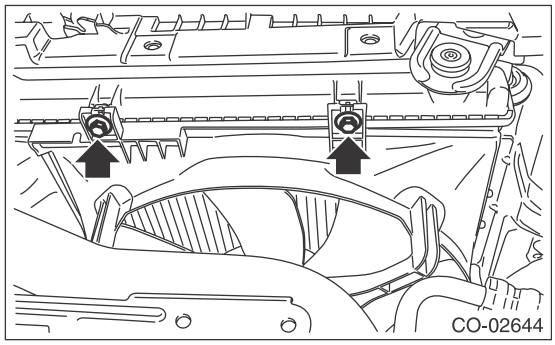

6) Remove the radiator sub fan motor assembly from the upper side of the vehicle.

B: INSTALLATION

Install in the reverse order of removal.

CAUTION:
Confirm that the radiator hose is securely connected.

Tightening torque:
7.5 N·m (0.8 kgf-m, 5.5 ft-lb)

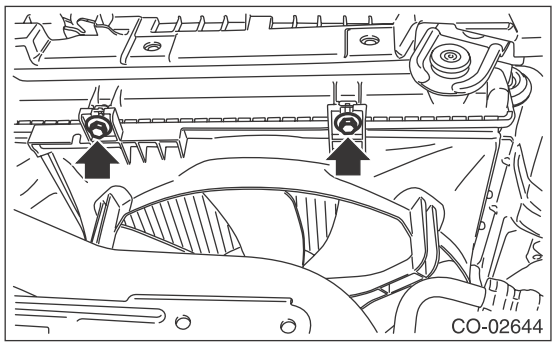

C: DISASSEMBLY

1) Remove the sub fan motor connector and sub fan motor harness from the radiator sub fan shroud.
2) Remove the radiator sub fan from the sub fan motor.

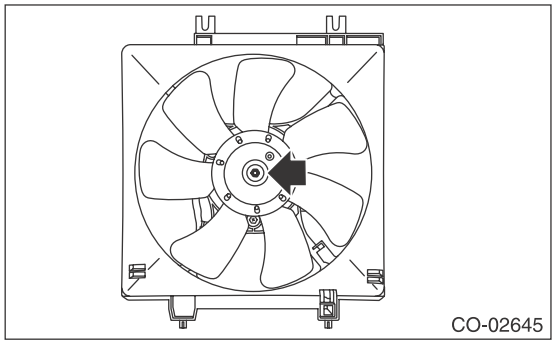

3) Remove the sub fan motor from the radiator sub fan shroud.

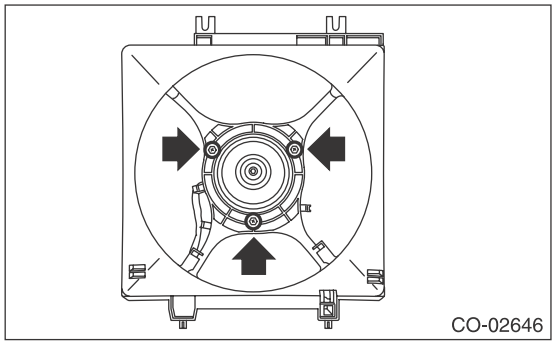

D: ASSEMBLY

Assemble in the reverse order of disassembly.

Tightening torque:
5 N·m (0.5 kgf-m, 3.7 ft-lb)

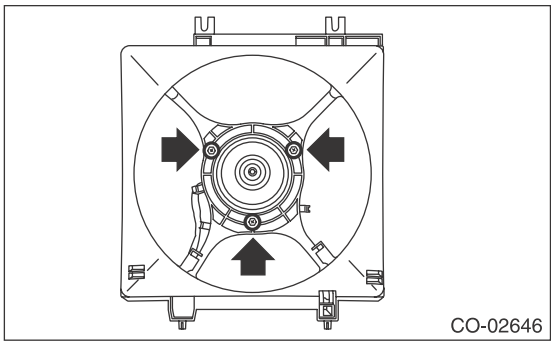

Tightening torque:
3.4 N·m (0.3 kgf-m, 2.5 ft-lb)

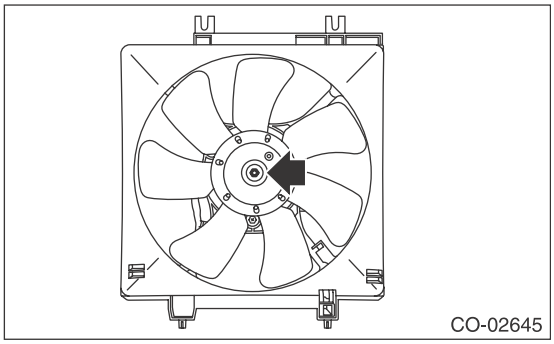

E: INSPECTION

Check that the radiator sub fan, radiator sub fan shroud and sub fan motor do not have deformation, cracks or damage.

10.Reservoir Tank

A: REMOVAL

1) Pull out the over flow hose (A).
2) Pull out the reservoir tank to the arrow direction while pushing the claw (B).

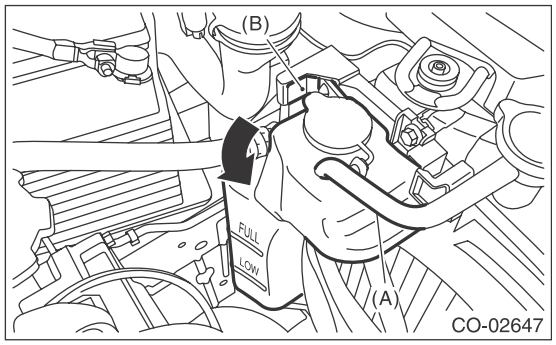

B: INSTALLATION

Install in the reverse order of removal.

C: INSPECTION

1) Check that the reservoir tank does not have deformation, cracks or damage.
2) Check the over flow hose for cracks or damage.
3) Make sure the engine coolant level is between “FULL” and “LOW”.

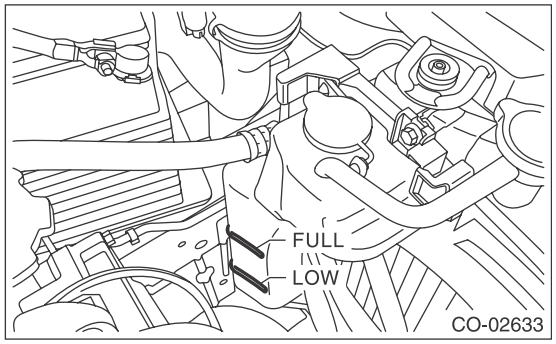

11.Engine Cooling System Trouble in General

A: INSPECTION

Trouble	Possible cause	Corrective action
Over-heating	a. Insufficient engine coolant	Replenish engine coolant, inspect for leakage, and repair it if necessary.
	b. Loose timing belt	Repair or replace timing belt tensioner.
	c. Oil on timing belt	Replace.
	d. Malfunction of thermostat	Replace.
	e. Malfunction of water pump	Replace.
	f. Clogged engine coolant passage	Clean.
	g. Improper ignition timing	Inspect and repair ignition control system. <Ref. to EN(H4DOTC)(diag)-2, PROCEDURE, Basic Diagnostic Procedure.>
	h. Clogged or leaking radiator	Clean, repair or replace.
	i. Defective radiator fan	Replace.
	j. Improper engine oil in engine coolant	Replace the engine coolant. If ineffective, check, repair or replace engine components.
	k. Air/fuel mixture ratio too lean	Inspect and repair the fuel injection system. <Ref. to EN(H4DOTC)(diag)-2, PROCEDURE, Basic Diagnostic Procedure.>
	l. Excessive back pressure in exhaust system	Clean or replace.
	m. Insufficient clearance between piston and cylinder	Adjust or replace.
	n. Slipping clutch	Repair or replace.
	o. Dragging brake	Adjust.
	p. Defective radiator fan	Inspect the radiator fan relay, engine coolant temperature sensor or fan motor and replace them.
Over-cooling	a. Ambient temperature extremely low	Partly cover radiator front area.
	b. Defective thermostat	Replace.
Engine coolant leaks	a. Loosened or damaged connecting units on hoses	Repair or replace.
	b. Leakage from water pump	Replace.
	c. Leakage from water pipe	Repair or replace.
	d. Leakage around cylinder head gasket	Retighten cylinder head bolts or replace cylinder head gasket.
	e. Damaged or cracked cylinder head and cylinder block	Repair or replace.
	f. Damaged or cracked thermostat cover	Repair or replace.
	g. Leakage from radiator	Repair or replace.
Noise	a. Timing belt problem	Replace.
	b. Defective radiator fan	Replace.
	c. Defective water pump bearing	Replace water pump.
	d. Defective water pump mechanical seal	Replace water pump.

LUBRICATION

LU(H4DOTC)

Page
1. General Description 2

1. General Description

A: SPECIFICATION

Specifications for the turbo model are included in the LU (H4SO) section. <Ref. to LU(H4SO)-2, General Description.>

SPEED CONTROL SYSTEMS

SP(H4DOTC)

Page
1. General Description 2

1. General Description

A: SPECIFICATION

Specifications for the turbo model are the same as the non-turbo model. <Ref. to SP(H4SO)-2, General Description.>

IGNITION

IG(H4DOTC)

Page

1. General Description 2
2. Spark Plug 4
3. Ignition Coil 6

1. General Description

A: SPECIFICATION

Item			SPECIFICATION
Ignition coil	Type		FK0368
	Ignition system		Independent ignition coil
	Manufacturer		Diamond Electric
Spark plug	Manufacturer and type		NGK: SILFR6B8
	Thread size (diameter, pitch, length) mm		14,1.25,26.5
	Spark plug gap mm (in)	Standard	0.7 — 0.8 (0.028 — 0.031)
	Electrode		Iridium

B: COMPONENT

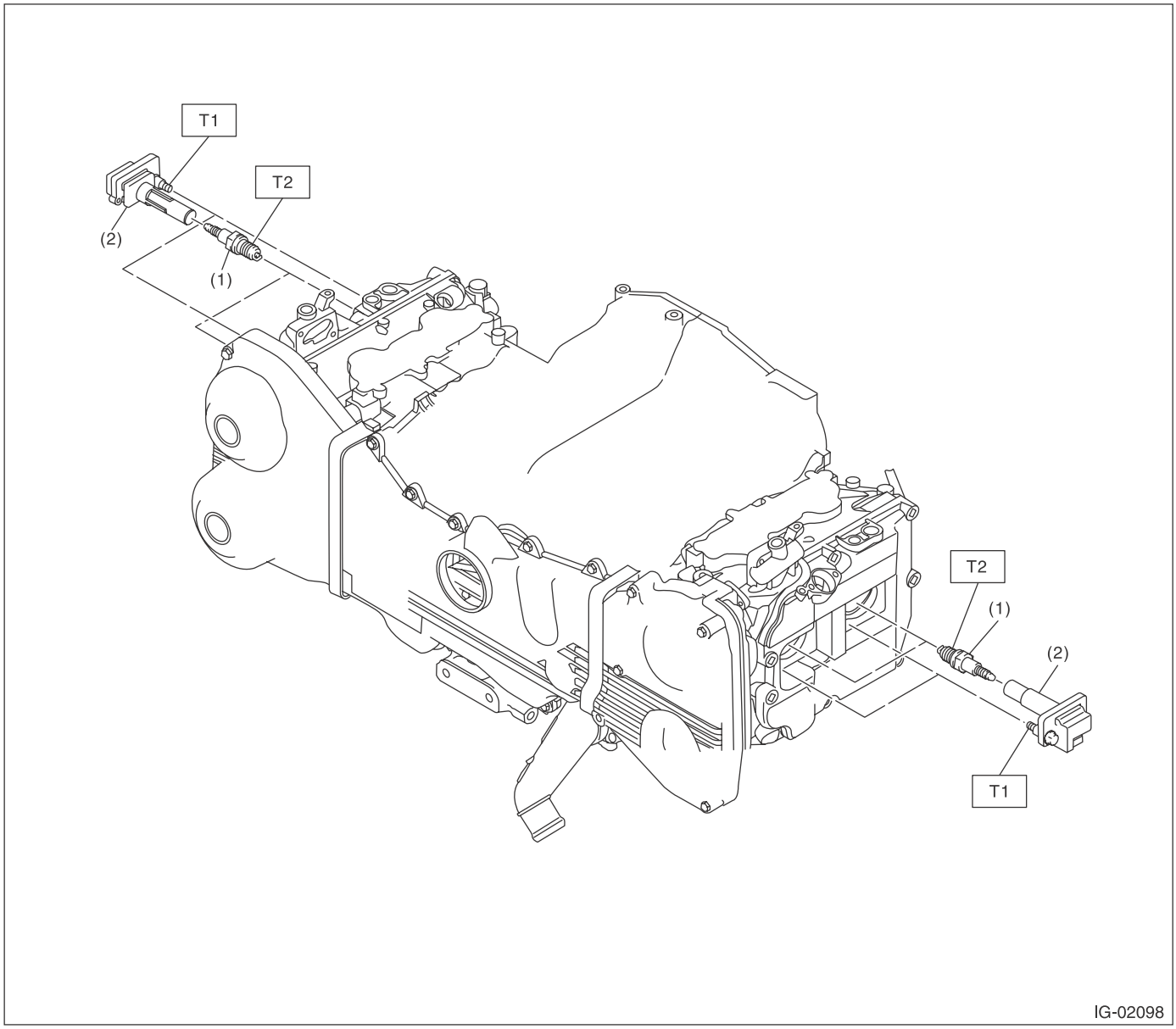

(1) Spark plug
(2) Ignition coil

Tightening torque:N·m (kgf-m, ft-lb)
T1: 16 (1.6, 11.8)
T2: 21 (2.1, 15.5)

C: CAUTION

- Wear appropriate work clothing, including a cap, protective goggles and protective shoes when performing any work.
- Remove contamination including dirt and corrosion before removal, installation or disassembly.
- Keep the disassembled parts in order and protect them from dust and dirt.
- Before removal, installation or disassembly, be sure to clarify the failure. Avoid unnecessary removal, installation, disassembly and replacement.
- Vehicle components are extremely hot after driving. Be wary of receiving burns from heated parts.
- Be sure to tighten fasteners including bolts and nuts to the specified torque.
- Place shop jacks or rigid racks at the specified points.
- Before disconnecting connectors of sensors or units, be sure to disconnect the ground cable from the battery.

2. Spark Plug

A: REMOVAL

Spark plug:
Refer to "SPECIFICATION" for the spark plug. <Ref. to IG(H4DOTC)-2, SPECIFICATION, General Description.>

1. RH SIDE

1) Disconnect the ground cable from battery.

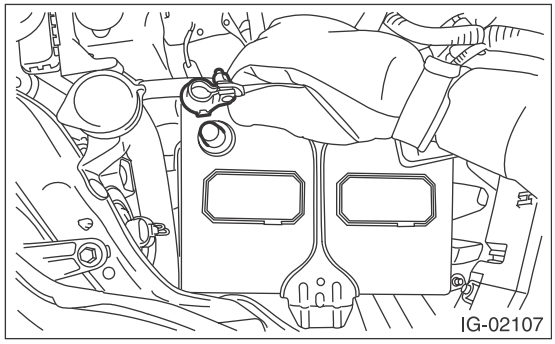
IG-02107

2) Remove the air cleaner case. <Ref. to IN(H4DOTC)-8, REMOVAL, Air Cleaner Case.>
3) Disconnect the connector from ignition coil.
4) Remove the ignition coil.

NOTE:
Turn #3 ignition coil by 180 degrees to remove it.

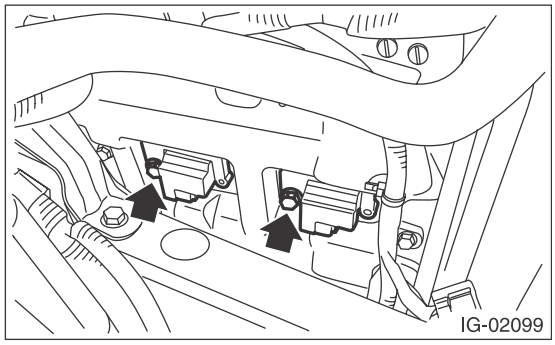
IG-02099

5) Remove the spark plug with a spark plug socket.

2. LH SIDE

1) Remove the battery. <Ref. to SC(H4SO)-26, REMOVAL, Battery.>
2) Disconnect the connector from ignition coil.
3) Remove the ignition coil.

NOTE:
Turn #4 ignition coil by 180 degrees to remove it.

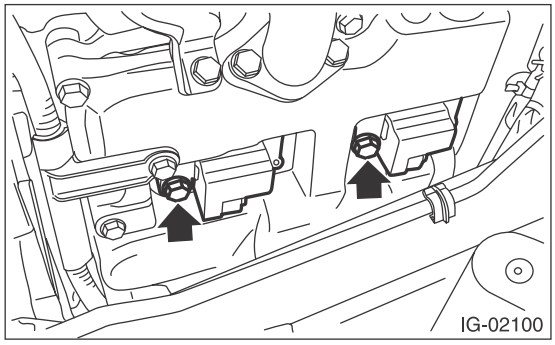
IG-02100

4) Remove the spark plug with a spark plug socket.

B: INSTALLATION

1. RH SIDE

Install in the reverse order of removal.

Tightening torque (Spark plug):
21 N·m (2.1 kgf-m, 15.5 ft-lb)

Tightening torque (Ignition coil):
16 N·m (1.6 kgf-m, 11.8 ft-lb)

2. LH SIDE

Install in the reverse order of removal.

Tightening torque (Spark plug):
21 N·m (2.1 kgf-m, 15.5 ft-lb)

Tightening torque (Ignition coil):
16 N·m (1.6 kgf-m, 11.8 ft-lb)

C: INSPECTION

1) Check the spark plug for abnormalities. If defective, replace the spark plug.

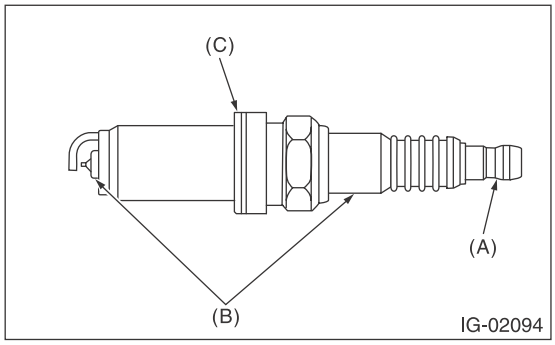

(A) Terminal damage
(B) Crack or damage in insulator
(C) Damaged gasket

2) Check the spark plug electrode and condition of the insulator. If abnormal, check and repair the cause and replace the spark plug.

(1) Normal:
Brown to grayish-tan deposits and slight electrode wear indicate correct spark plug heat range.

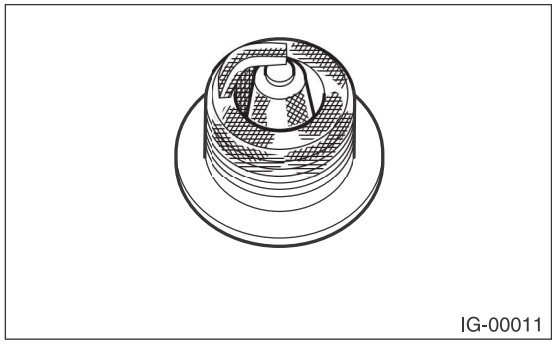
IG-00011

(2) Carbon fouled:
Dry fluffy carbon deposits on insulator and electrode are mostly caused by slow speed driving in the city, weak ignition, too rich fuel mixture, etc.

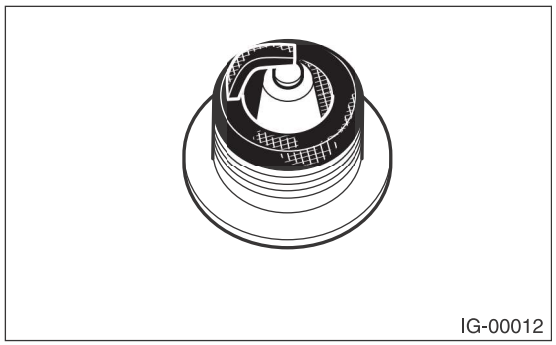
IG-00012

(3) Oil fouled:
Wet black deposits show oil entrance into combustion chamber through worn piston rings or increased clearance between valve guides and valve stems.

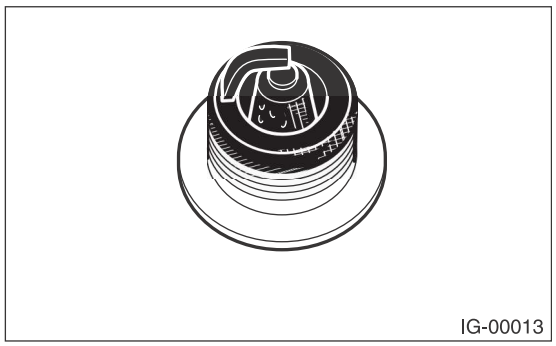
IG-00013

(4) Overheating:
White or light gray insulator with black or brown spots and bluish burnt electrodes indicate engine overheating, wrong selection of fuel, or loose spark plugs.

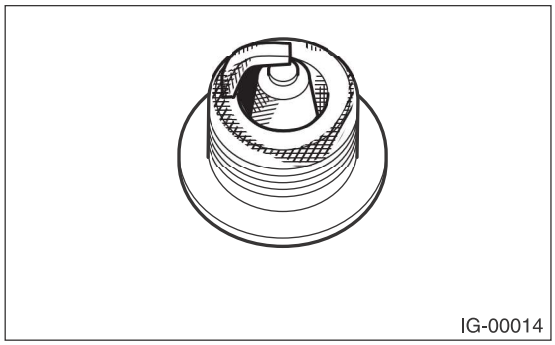
IG-00014

3) Using a nylon brush, etc., clean and remove the carbon or oxide deposits from the spark plug. If deposits are too stubborn, replace the spark plugs. After cleaning the spark plugs, check the spark plug gap "L" using a gap gauge. If it is not within the standard, replace the spark plug.

NOTE:
- Never use a plug cleaner.
- Do not use a metal brush as it may damage the electrode area.

Spark plug gap L:
Standard
0.7 — 0.8 mm (0.028 — 0.031 in)

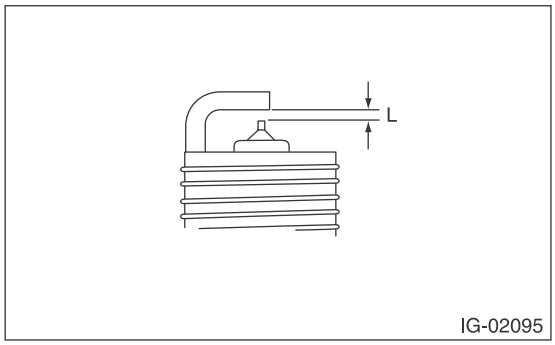

IG-02095

3. Ignition Coil

A: REMOVAL

Direct ignition type has been adopted. Refer to “Spark Plug”, “REMOVAL” for removal procedures. <Ref. to IG(H4DOTC)-4, REMOVAL, Spark Plug.>

B: INSTALLATION

Install in the reverse order of removal.

Tightening torque:
16 N·m (1.6 kgf-m, 11.8 ft-lb)

C: INSPECTION

For inspection procedure, refer to “Diagnostics for Engine Starting Failure”. <Ref. to EN(H4DOTC)(diag)-73, IGNITION CONTROL SYSTEM, Diagnostics for Engine Starting Failure.>

STARTING/CHARGING SYSTEMS

SC(H4DOTC)

Page
1. General Description 2

1. General Description

A: SPECIFICATION

Specifications for the turbo model are included in the SC(H4SO) section. <Ref. to SC(H4SO)-2, General Description.>

ENGINE (DIAGNOSTICS)

EN(H4DOTC)(diag)

		Page
1.	Basic Diagnostic Procedure	2
2.	Check List for Interview	4
3.	General Description	6
4.	Electrical Component Location	9
5.	Engine Control Module (ECM) I/O Signal	19
6.	Engine Condition Data	30
7.	Data Link Connector	31
8.	General Scan Tool	32
9.	Subaru Select Monitor	37
10.	Read Diagnostic Trouble Code (DTC)	43
11.	Inspection Mode	44
12.	Drive Cycle	49
13.	Clear Memory Mode	55
14.	System Operation Check Mode	56
15.	Malfunction Indicator Light	57
16.	Diagnostics for Engine Starting Failure	67
17.	List of Diagnostic Trouble Code (DTC)	78
18.	Diagnostic Procedure with Diagnostic Trouble Code (DTC)	86
19.	General Diagnostic Table	337

1. Basic Diagnostic Procedure

A: PROCEDURE

1. ENGINE

	Step	Check	Yes	No
1	**CHECK ENGINE START FAILURE.** 1) Ask the customer when and how the trouble occurred using the interview check list. <Ref. to EN(H4DOTC)(diag)-4, CHECK, Check List for Interview.> 2) Start the engine.	Does the engine start?	Go to step **2**.	Inspection using “Diagnostics for Engine Start Failure”. <Ref. to EN(H4DOTC)(diag)-67, Diagnostics for Engine Starting Failure.>
2	**CHECK ILLUMINATION OF MALFUNCTION INDICATOR LIGHT.**	Does the malfunction indicator light illuminate?	Go to step **3**.	Inspection using “General Diagnostic Table”. <Ref. to EN(H4DOTC)(diag)-337, General Diagnostic Table.>
3	**CHECK COMMUNICATION STATUS.** 1) Turn the ignition switch to OFF. 2) Connect the Subaru Select Monitor or general scan tool to data link connector. 3) Turn the ignition switch to ON, and run the Subaru Select Monitor or general scan tool. NOTE: • Subaru Select Monitor For detailed procedures, refer to “Subaru Select Monitor”. <Ref. to EN(H4DOTC)(diag)-37, Subaru Select Monitor.> • General scan tool For detailed operation procedures, refer to the general scan tool operation manual.	Does Subaru select monitor or general scan tool communicate with vehicle normally?	Go to step **4**.	Inspection using LAN system “Diagnostic Procedure with Diagnostic Trouble Code (DTC)”. <Ref. to LAN(diag)-47, COMMUNICATION FOR INITIALIZING IMPOSSIBLE, Diagnostic Procedure with Diagnostic Trouble Code (DTC).>
4	**CHECK DTC.** Read DTC using Subaru Select Monitor or general scan tool. NOTE: • Subaru Select Monitor Refer to “Read Diagnostic Trouble Code” for detailed operation procedure. <Ref. to EN(H4DOTC)(diag)-43, Read Diagnostic Trouble Code (DTC).> • General scan tool For detailed operation procedures, refer to the general scan tool operation manual.	Is DTC displayed on Subaru Select Monitor or general scan tool?	Record the DTC. Repair the trouble cause. <Ref. to EN(H4DOTC)(diag)-78, List of Diagnostic Trouble Code (DTC).> Go to step **5**.	Repair the related parts. NOTE: If DTC is not shown on display although the malfunction indicator light illuminates, perform the diagnosis of malfunction indicator light circuit or combination meter. <Ref. to EN(H4DOTC)(diag)-57, Malfunction Indicator Light.>

	Step	Check	Yes	No
5	**CHECK FREEZE FRAME DATA.** Check the freeze frame data using the Subaru Select Monitor or general scan tool. NOTE: • Subaru Select Monitor For detailed procedures, refer to "Subaru Select Monitor". <Ref. to EN(H4DOTC)(diag)-37, Subaru Select Monitor.> • General scan tool For detailed operation procedures, refer to the general scan tool operation manual.	Is freeze frame data displayed on Subaru Select Monitor or general scan tool?	Record the freeze frame data. Repair the cause of fault, and go to the next step. Go to step **6**.	Go to step **6**.
6	**PERFORM DIAGNOSIS.** 1) Perform the Clear Memory Mode. <Ref. to EN(H4DOTC)(diag)-55, Clear Memory Mode.> 2) Perform the Inspection Mode or drive cycle. <Ref. to EN(H4DOTC)(diag)-44, Inspection Mode.> <Ref. to EN(H4DOTC)(diag)-49, Drive Cycle.>	Is DTC displayed on Subaru Select Monitor or general scan tool?	Inspect using "Diagnostic Procedure with Diagnostic Trouble Code (DTC)". <Ref. to EN(H4DOTC)(diag)-86, Diagnostic Procedure with Diagnostic Trouble Code (DTC).>	Finish the diagnosis.

2. Check List for Interview

A: CHECK

1. CHECK LIST NO. 1

Check the following item when problem has occurred.

NOTE:
Use copies of this page for interviewing customers.

Customer's name		Engine No.	
Date of purchase		Fuel brand	
Date of repair		Odometer reading	km
V.I.N.			miles
Weather	❑ Fine ❑ Cloudy ❑ Rainy ❑ Snowy ❑ Various/Others:		
Ambient air temperature	°C (°F)		
	❑ Hot ❑ Warm ❑ Cool ❑ Cold		
Place	❑ Highway ❑ Suburbs ❑ Inner city ❑ Uphill ❑ Downhill ❑ Rough road ❑ Others:		
Engine temperature	❑ Cold ❑ Warming-up ❑ After warming-up ❑ Any temperature ❑ Others:		
Engine speed	rpm		
Vehicle speed	km/h (MPH)		
Driving conditions	❑ Not affected ❑ At starting ❑ While idling ❑ At racing ❑ While accelerating ❑ While cruising ❑ While decelerating ❑ While turning (RH/LH)		
Headlight	❑ ON/❑ OFF	Rear defogger	❑ ON/❑ OFF
Blower	❑ ON/❑ OFF	Audio	❑ ON/❑ OFF
A/C compressor	❑ ON/❑ OFF	CD/Cassette	❑ ON/❑ OFF
Radiator fan	❑ ON/❑ OFF	Car phone	❑ ON/❑ OFF
Front wiper	❑ ON/❑ OFF	Wireless device	❑ ON/❑ OFF
Rear wiper	❑ ON/❑ OFF		

2. CHECK LIST NO. 2

Check the following item about the vehicle's state when malfunction indicator light illuminates.

NOTE:
Use copies of this page for interviewing customers.

a) Other warning lights or indicators turn on. ❑ Yes / ❑ No
❑ Low fuel warning light ❑ Charge indicator light ❑ Engine coolant temperature indicator light ❑ Oil pressure warning light ❑ ATF temperature indicator light or SPORT indicator light ❑ Drivers control center differential indicator light ❑ ABS warning light ❑ VDC warning light ❑ Cruise indicator light ❑ SI-CRUISE warning light ❑ Immobilizer indicator light ❑ STEERING indicator light ❑ Glow indicator light ❑ Sedimentor warning light ❑ Others:
b) Fuel level
• Lack of gasoline: ❑ Yes / ❑ No • Indicator position of fuel gauge: • Experienced running out of fuel: ❑ Yes / ❑ No
c) Intentional connecting or disconnecting of harness connectors or spark plug cords: ❑ Yes / ❑ No
• What:
d) Intentional connecting or disconnecting of hoses: ❑ Yes / ❑ No
• What:
e) Installing of parts other than genuine parts: ❑ Yes / ❑ No
• What: • Where:
f) Occurrence of noise: ❑ Yes / ❑ No
• From where: • What kind:
g) Occurrence of smell: ❑ Yes / ❑ No
• From where: • What kind:
h) Intrusion of water into engine compartment or passenger compartment: ❑ Yes / ❑ No
i) Troubles occurred
❑ Engine does not start. ❑ Engine stalls during idling. ❑ Engine stalls while driving. ❑ Engine speed decreases. ❑ Engine speed does not decrease. ❑ Rough idling ❑ Poor acceleration ❑ Back fire ❑ After fire ❑ Does not shift. ❑ Excessive shift shock

3. General Description

A: CAUTION

1) Airbag system wiring harness is routed near the ECM, main relay and fuel pump relay.

CAUTION:
• Do not use electrical test equipment on the airbag system circuit.
• Be careful not to damage the airbag system wiring harness when servicing the ECM, TCM, main relay and fuel pump relay.

2) Never connect the battery in reverse polarity. Doing so will damage the ECM instantly, and other parts will also be damaged.

3) Do not disconnect the battery terminals while the engine is running. A large counter electromotive force will be generated in the generator, and this voltage may damage electronic parts such as ECM etc.

4) Before disconnecting the connectors of each sensor and ECM, be sure to turn the ignition switch to OFF. Perform the Clear Memory Mode after connecting the connectors. <Ref. to EN(H4DOTC)(diag)-55, Clear Memory Mode.>

5) When measuring the voltage or resistance of individual sensor or all electrical control modules, use a tapered pin with a diameter of less than 0.6 mm (0.024 in). Do not insert the pin 4 mm (0.16 in) or more into the part.

CAUTION:
When replacing the ECM, be careful not to use the wrong spec. ECM to avoid any damage on the fuel injection system.

NOTE:
When replacing the ECM of the models with Immobilizer, immobilizer system must be registered. To do so, all ignition keys and ID cards need to be prepared. For detailed operation procedures, refer to “PC application help for Subaru Select Monitor”.

6) Take care not to allow water to get into the connectors when servicing or washing the vehicle in rainy weather. Avoid exposure to water even if the connectors are waterproof.

7) Use ECM mounting stud bolts at the body side grounding point when measuring voltage and resistance inside the passenger compartment.

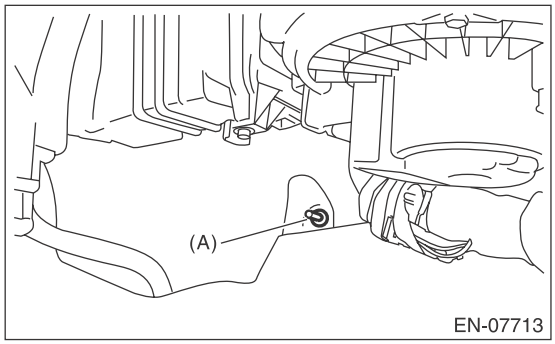

(A) Stud bolt

8) Use the engine ground terminal or engine assembly as the grounding point to chassis when measuring the voltage and resistance in engine compartment.

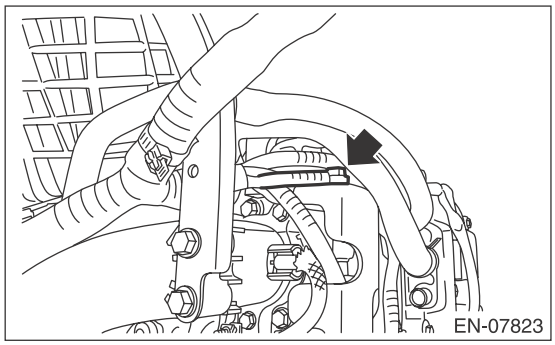

9) Every MFI-related part is a precision part. Do not drop them.

10) Observe the following cautions when installing a radio in vehicle.

CAUTION:
• The antenna must be kept as far apart as possible from control module. (ECM is installed at the back of the glove box.)
• The antenna feeder must be placed as far apart as possible from the ECM and engine control system harness.
• Carefully adjust the antenna for correct matching.
• When mounting a large power type radio, pay special attention to the three items mentioned above.
• Incorrect installation of the radio may affect the operation of ECM.

11) When disconnecting the fuel hose, release the fuel pressure. <Ref. to FU(H4DOTC)-65, RELEASING OF FUEL PRESSURE, PROCEDURE, Fuel.>

12) For the model with ABS, the ABS warning light may illuminate when performing driving test with jacked-up or lifted-up condition, but this is not a system malfunction. The reason for this is the speed difference between the front and rear wheels. When engine control system diagnosis is finished, perform the VDC memory clearance procedure of self-diagnosis function. <Ref. to VDC(diag)-25, Clear Memory Mode.>

B: INSPECTION

Before performing diagnostics, check the following item which might affect engine problems.

1. BATTERY

1) Measure the battery voltage and specific gravity of the electrolyte.

Standard voltage: 12 V

Specific gravity: 1.260 or more

2) Check the condition of the main and other fuses, and harnesses and connectors. Also check for proper grounding.

2. ENGINE GROUND

Make sure that the engine ground terminal is properly connected to the engine.

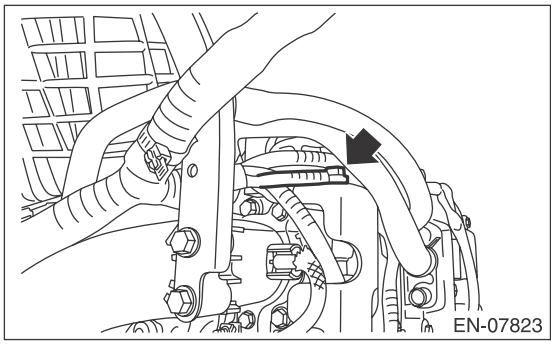

C: NOTE

• The on-board diagnostic (OBD) system detects and indicates a fault in various inputs and outputs of the complex electronic control. Malfunction indicator light in the combination meter indicates occurrence of a fault or trouble.
• Further, against such a failure of sensors as may disable the drive, the fail-safe function is provided to ensure the minimal driveability.
• The OBD system incorporated with the vehicles within this type of engine complies with OBD-II regulations. The OBD system monitors the components and the system malfunction listed in “Engine Section” which affects on emissions.
• When the system decides that a malfunction occurs, malfunction indicator light illuminates. At the same time of the malfunction indicator light illumination or blinking, a DTC and a freeze frame engine conditions are stored into on-board computer.
• The OBD system stores freeze frame engine condition data (engine load, engine coolant temperature, fuel trim, engine speed and vehicle speed, etc.) into on-board computer when it detects a malfunction.
• Freeze frame engine condition data are stored until the DTCs are cleared. However when such malfunctions as fuel trim fault and misfire are detected with the freeze frame engine condition data stored, they are rewritten into those related to the fuel trim fault and misfire.
• When the malfunction does not occur again for three consecutive driving cycles, malfunction indicator light is turned off, but DTC remains at on-board computer.
• When performing diagnosis, connect the Subaru Select Monitor or general scan tool to the vehicle.

D: PREPARATION TOOL

ILLUSTRATION	TOOL NUMBER	DESCRIPTION	REMARKS
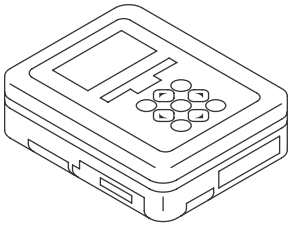 ST1B022XU0	1B022XU0	SUBARU SELECT MONITOR III KIT	Used for troubleshooting the electrical system.
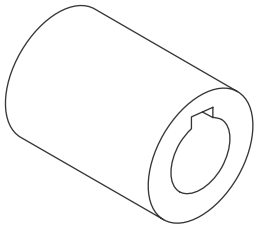 ST-499987500	499987500	CRANKSHAFT SOCKET	Used for rotating crankshaft.

4. Electrical Component Location

A: LOCATION

1. CONTROL MODULE

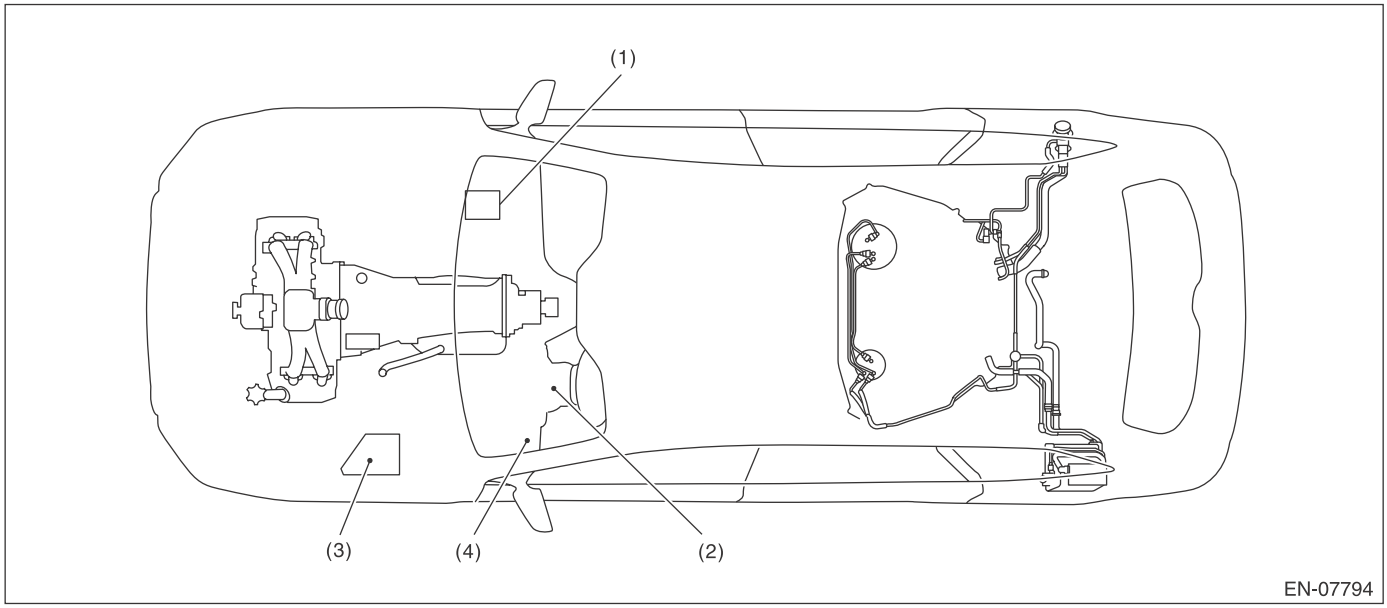

(1) Engine control module (ECM)
(3) Delivery (test) mode fuse
(4) Data link connector
(2) Malfunction indicator light

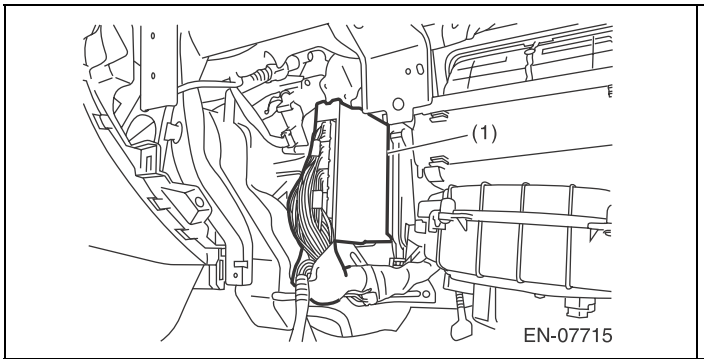

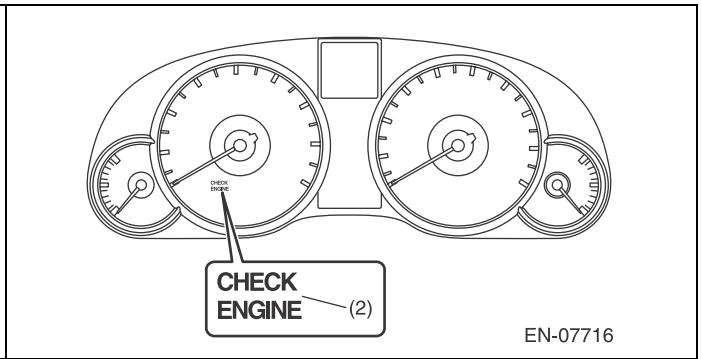

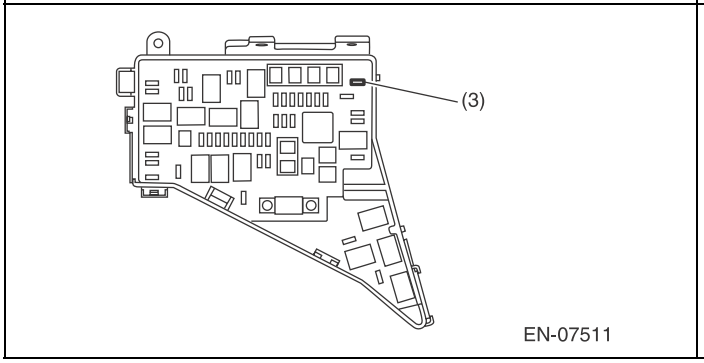

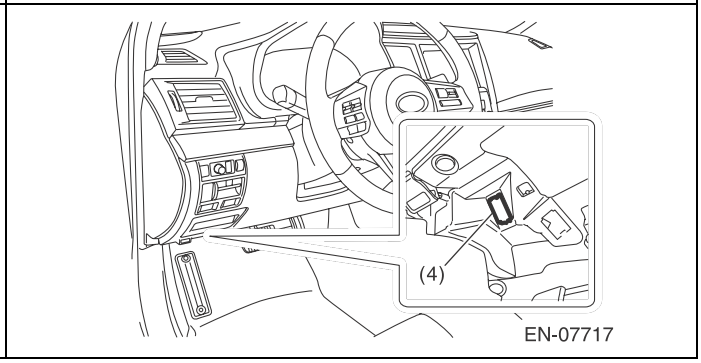

2. SENSOR

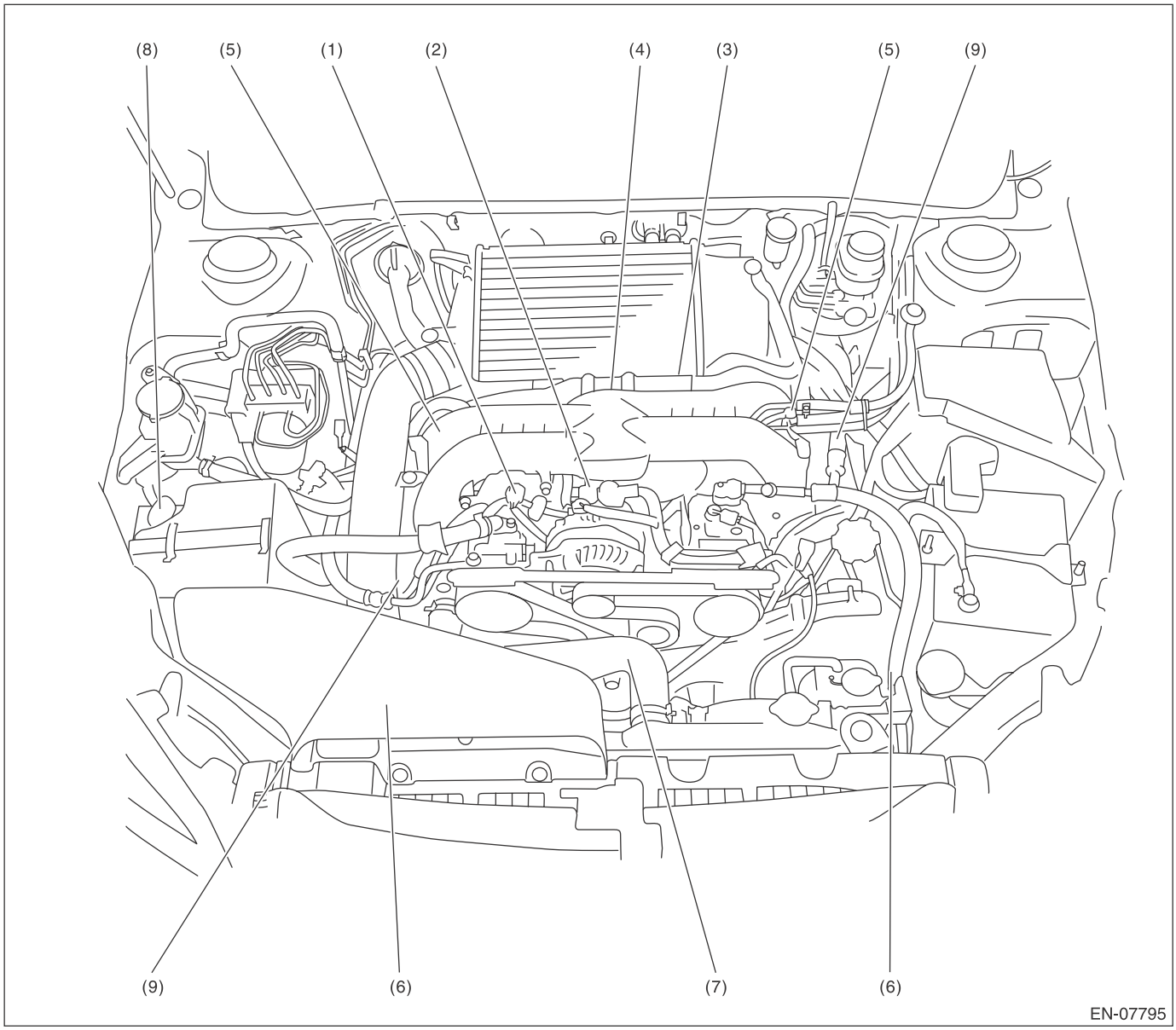

(1)	Manifold absolute pressure sensor	(4)	Knock sensor	(7)	Crankshaft position sensor
(2)	Engine coolant temperature sensor	(5)	Intake camshaft position sensor	(8)	Mass air flow and intake air temperature sensor
(3)	Electronic throttle control	(6)	Exhaust camshaft position sensor	(9)	Tumble generator valve ASSY

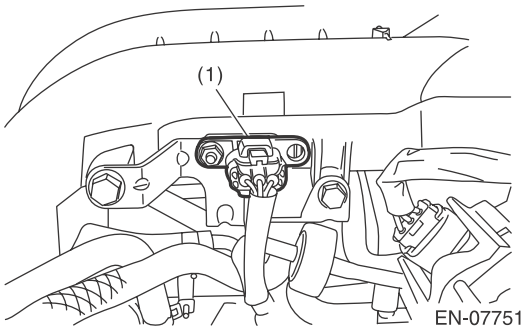
(1)
EN-07751

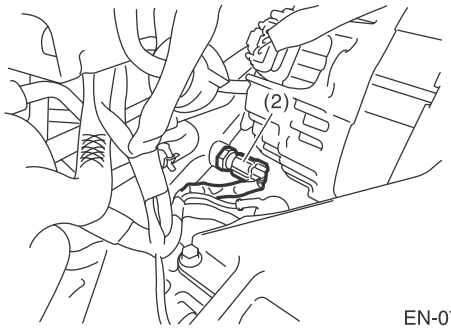
(2)
EN-07747

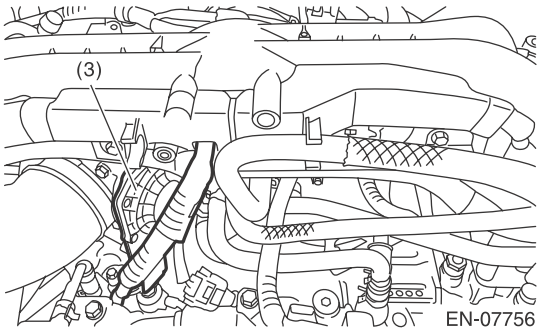
(3)
EN-07756

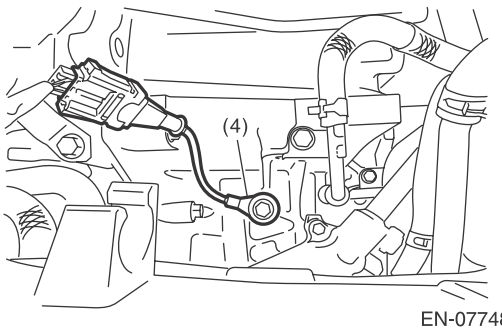
(4)
EN-07748

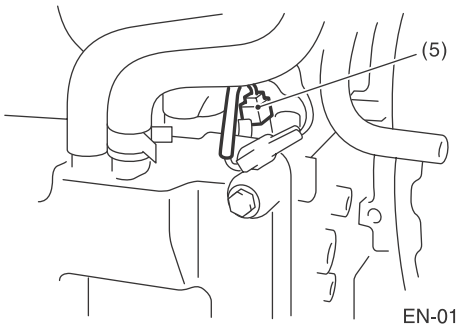
(5)
EN-01798

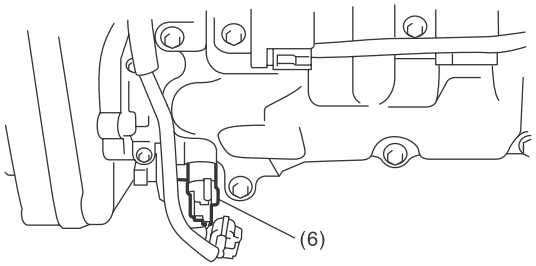
(6)
EN-01929

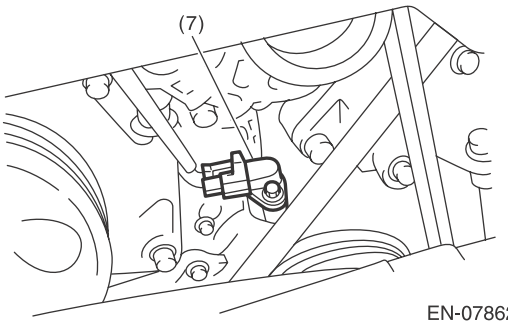
(7)
EN-07862

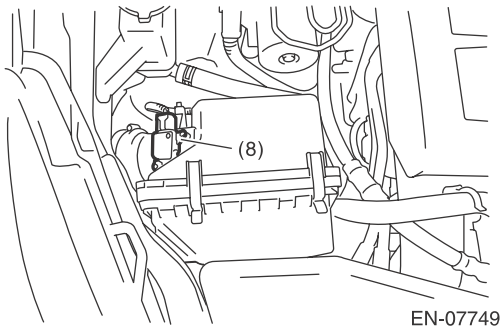
(8)
EN-07749

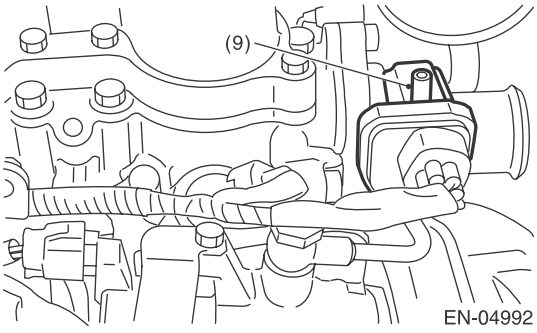
(9)
EN-04992

Electrical Component Location

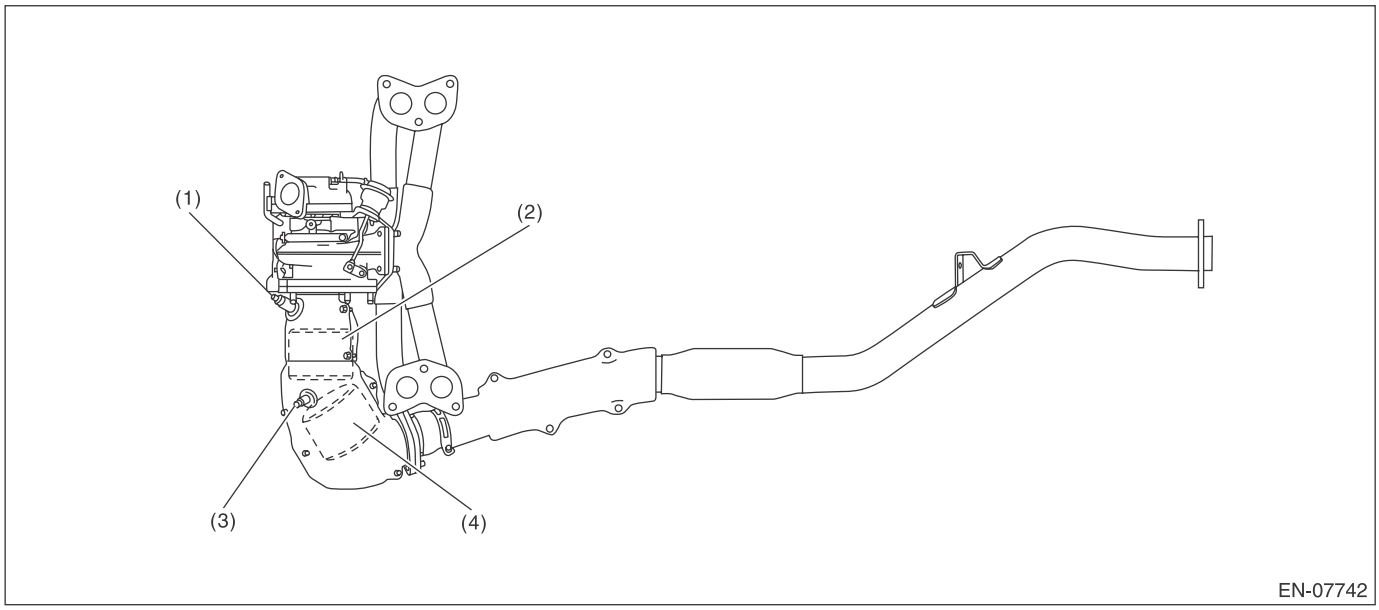

(1) Front oxygen (A/F) sensor
(2) Front catalytic converter
(3) Rear oxygen sensor
(4) Rear catalytic converter

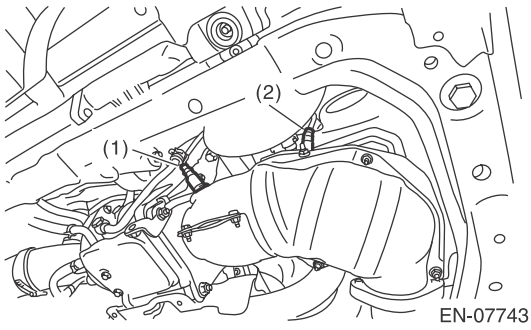

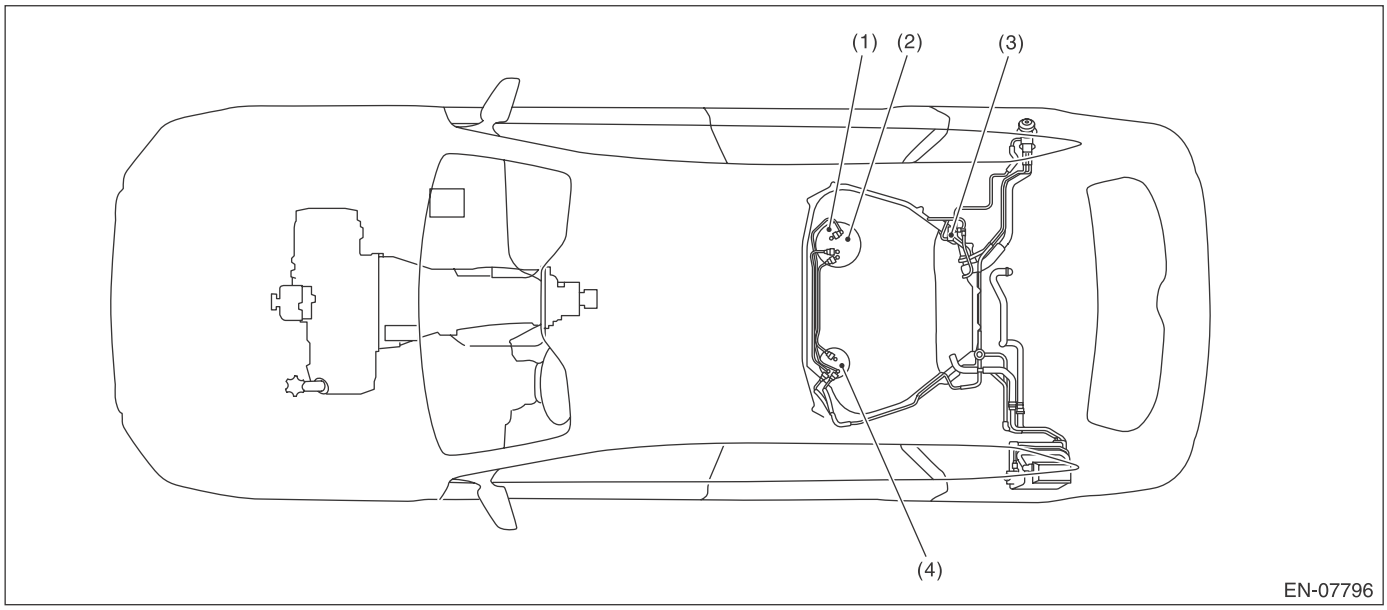

(1) Fuel level sensor
(2) Fuel temperature sensor
(3) Fuel tank pressure sensor
(4) Fuel sub level sensor

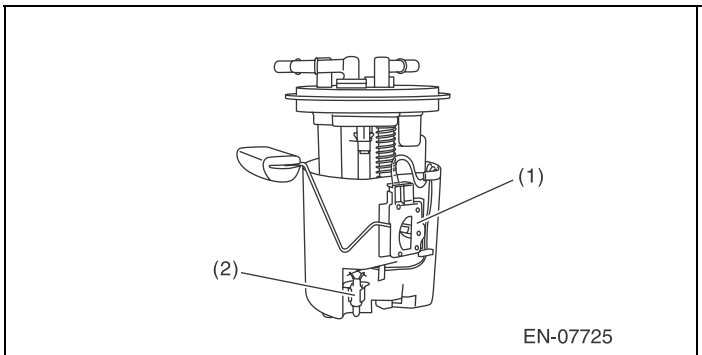

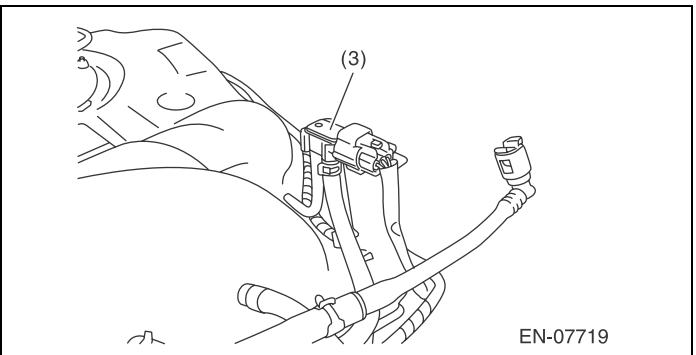

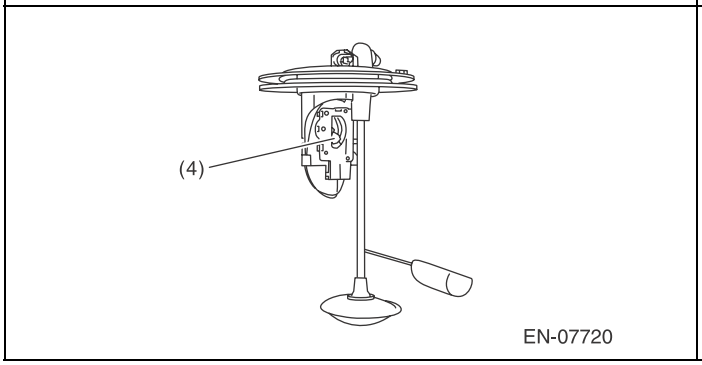

3. SOLENOID VALVE, ACTUATOR, EMISSION CONTROL SYSTEM PARTS AND IGNITION SYSTEM PARTS

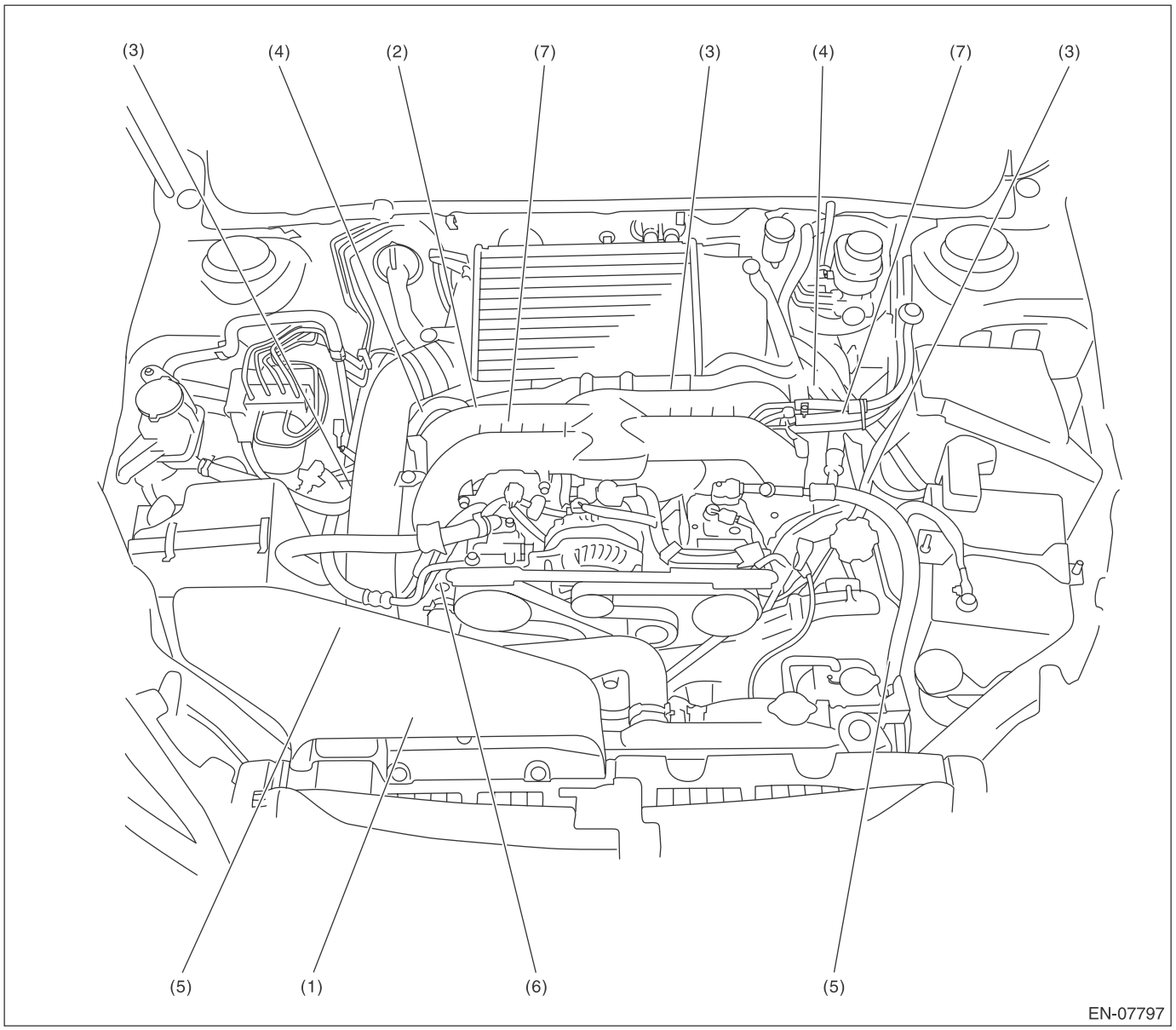

(1) Wastegate control solenoid valve
(2) Purge control solenoid valve 1
(3) Ignition coil
(4) Intake oil flow control solenoid valve
(5) Exhaust oil flow control solenoid valve
(6) Tumble generator valve ASSY
(7) Purge control solenoid valve 2

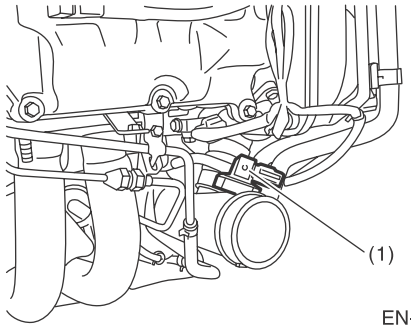

EN-07758

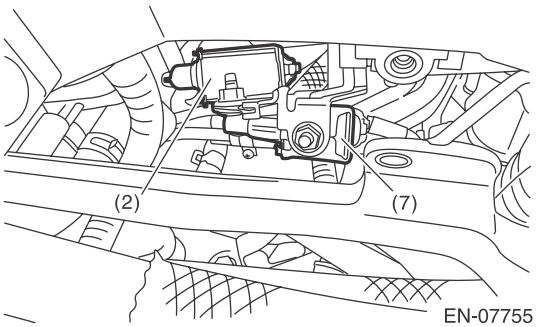

EN-07755

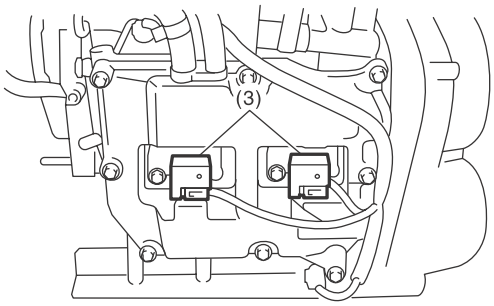

EN-01936

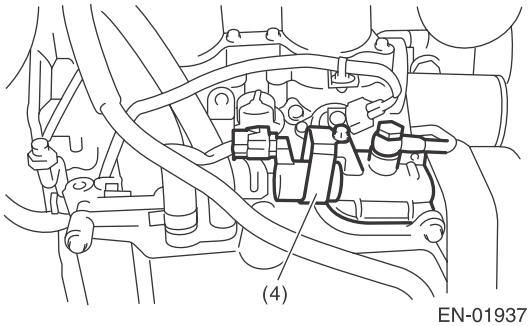

EN-01937

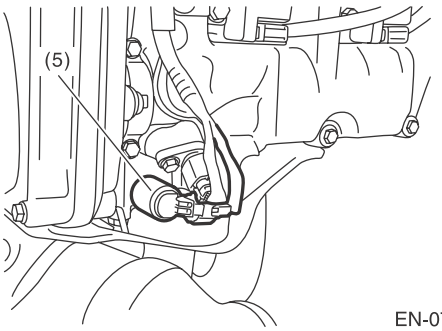

EN-07762

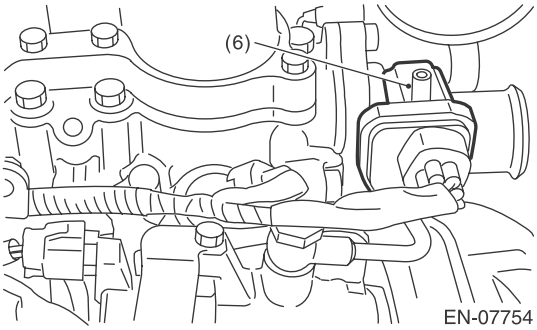

EN-07754

Electrical Component Location

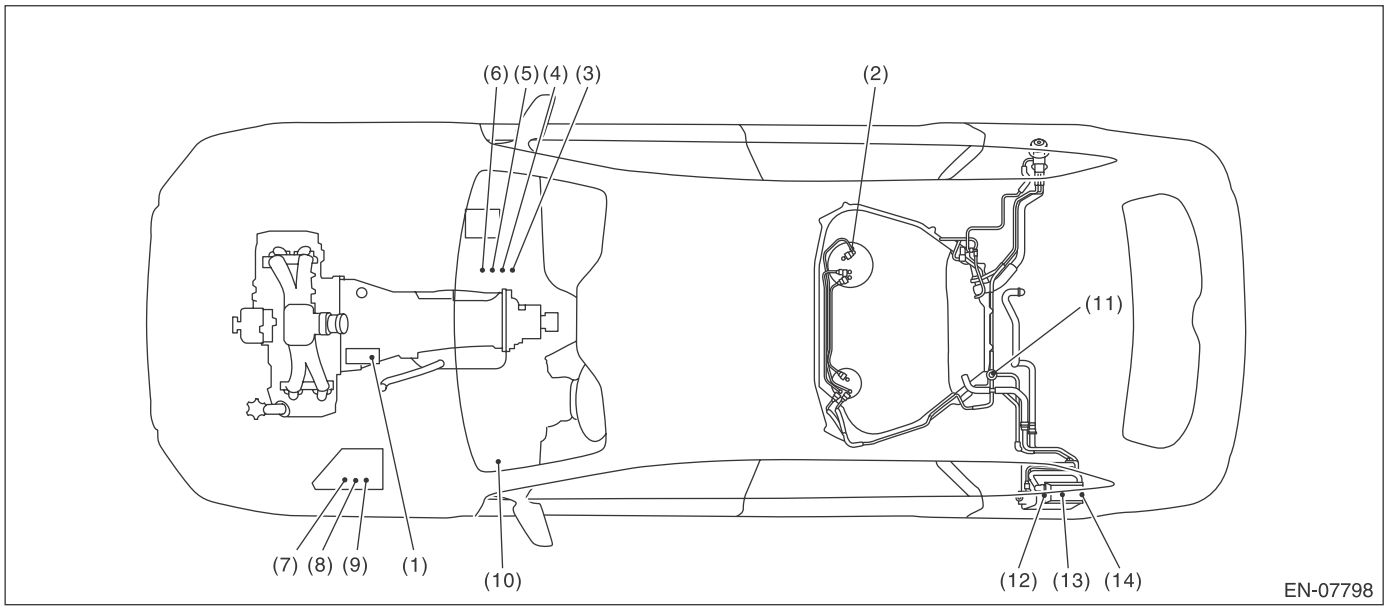

(1) Starter
(2) Fuel pump
(3) Main relay
(4) A/F, oxygen sensor relay
(5) Electronic throttle control relay
(6) Fuel pump relay
(7) Radiator main fan relay 1
(8) Radiator main fan relay 2
(9) Radiator sub fan relay
(10) Starter relay
(11) Pressure control solenoid valve
(12) Canister
(13) Drain valve
(14) Drain filter

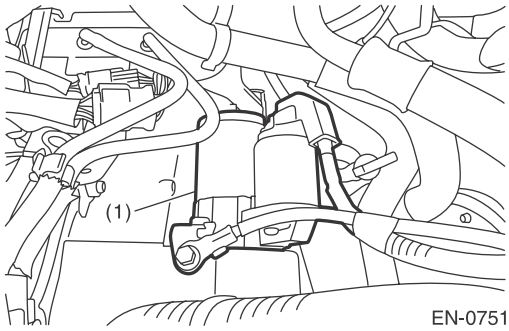

EN-07519

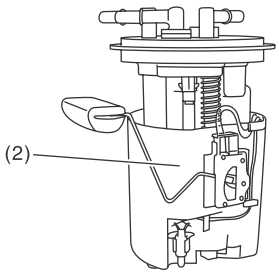

EN-07753

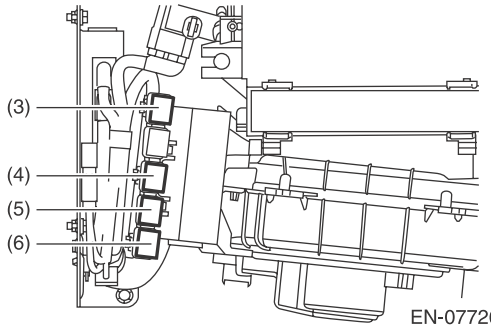

EN-07726

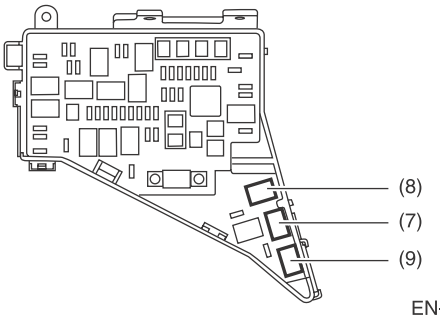

EN-07521

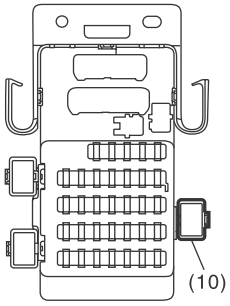

EN-07727

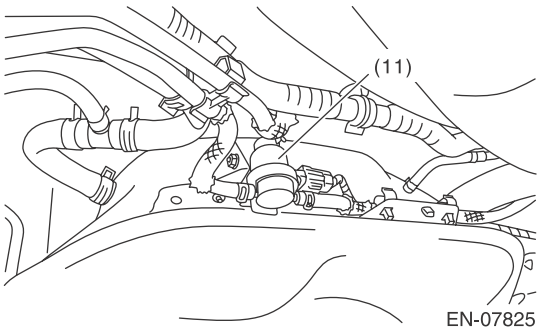

EN-07825

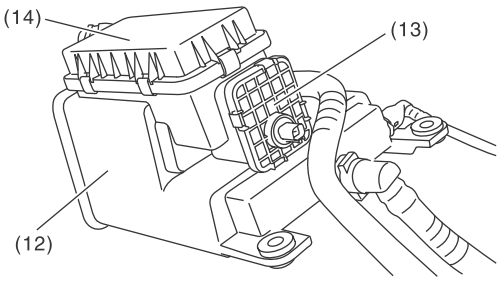

EN-07723

4. TRANSMISSION

- Solenoid valve and switch

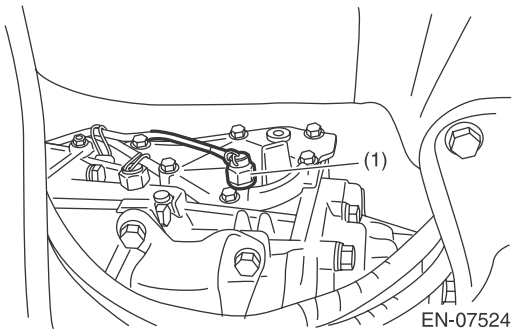

(1) Neutral position switch

5. Engine Control Module (ECM) I/O Signal

A: ELECTRICAL SPECIFICATION

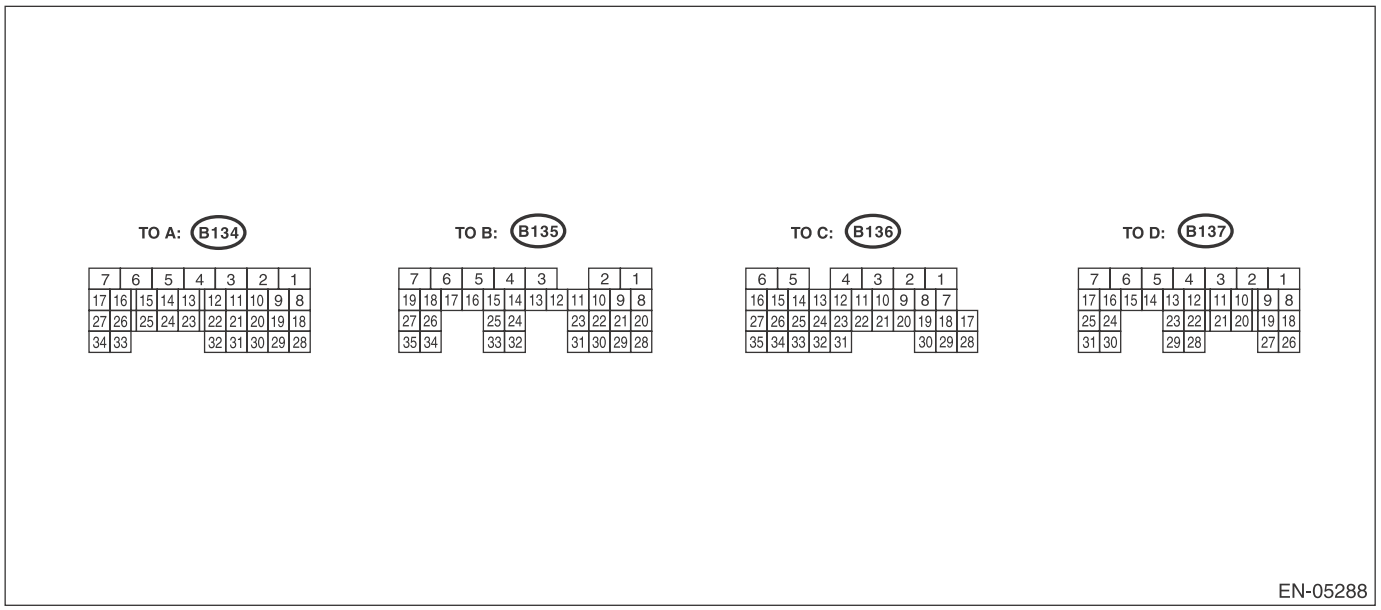

Description		Connector No.	Terminal No.	Signal (V)		Note
				Ignition SW ON (engine OFF)	Engine ON (idling)	
Crankshaft position sensor	Signal (+)	B137	17	0	–7 — +7	Waveform
	Signal (–)	B137	25	0	0	—
	Shield	B137	31	0	0	—
Front oxygen (A/F) sensor	Signal (+)	B136	19	2.8 — 3.2	2.8 — 3.2	—
	Signal (–)	B136	18	2.4 — 2.7	2.4 — 2.7	—
	Shield	B136	9	0	0	—
Rear oxygen sensor	Signal	B136	20	0	0 — 0.9	—
	Shield	B136	9	0	0	—
	Ground (sensor)	B135	30	0	0	—
Front oxygen (A/F) sensor heater	Signal 1	B136	6	—	—	Waveform
	Signal 2	B136	5	—	—	Waveform
Rear oxygen sensor heater signal		B135	6	0 — 13	—	Waveform
Engine coolant temperature sensor	Signal	B137	22	1.0 — 1.4	1.0 — 1.4	After engine is warmed up.
	Ground (sensor)	B134	29	0	0	After engine is warmed up.
Air flow sensor	Signal	B136	22	—	0.3 — 4.5	—
	Shield	B136	10	0	0	—
	Ground	B136	11	0	0	—
Intake air temperature sensor signal		B136	31	0.3 — 4.6	0.3 — 4.6	—
Wastegate control solenoid valve		B134	33	0 or 10 — 13	0 or 12 — 14	Waveform
Starter switch		B136	16	0	0	Cranking: 8 — 14
Ignition switch		B136	30	10 — 13	12 — 14	—
Neutral position switch		B136	35	ON: 0 OFF: 10 — 13	ON: 0 OFF: 12 — 14	—

Engine Control Module (ECM) I/O Signal

Description		Connector No.	Terminal No.	Signal (V)		Note
				Ignition SW ON (engine OFF)	Engine ON (idling)	
Delivery (test) mode fuse		B136	34	10 — 13	12 — 14	When fuse is installed: 0
Knock sensor	Signal	B137	2	2.8	2.8	—
	Shield	B137	8	0	0	—
Back-up power supply		B136	2	10 — 13	12 — 14	Ignition switch “OFF”: 10 — 13
Control module power supply		B137	7	10 — 13	12 — 14	—
		B136	1	10 — 13	12 — 14	—
Sensor power supply		B134	19	5	5	—
		B135	22	5	5	—
Ignition control	#1	B134	21	0	0 or 5	Waveform
	#2	B134	22	0	0 or 5	Waveform
	#3	B134	31	0	0 or 5	Waveform
	#4	B134	32	0	0 or 5	Waveform
Fuel injector	#1	B134	10	10 — 13	1 — 14	Waveform
	#2	B134	11	10 — 13	1 — 14	Waveform
	#3	B134	12	10 — 13	1 — 14	Waveform
	#4	B134	13	10 — 13	1 — 14	Waveform
Fuel pump control unit	Control	B136	33	0 or 5	0 or 5	Waveform
	Diagnosis signal	B135	10	0 or 10 — 13	12 — 14	—
Radiator fan relay 1 control		B135	11	ON: 0.5 or less OFF: 10 — 13	ON: 0.5 or less OFF: 12 — 14	—
Radiator fan relay 2 control		B135	12	ON: 0.5 or less OFF: 10 — 13	ON: 0.5 or less OFF: 12 — 14	—
Malfunction indicator light		B135	33	—	—	Light “ON”: 1 or less Light “OFF”: 10 — 14
Engine speed output		B135	15	—	0 — 13 or more	Waveform
Purge control solenoid valve 1		B137	6	ON: 1 or less OFF: 10 — 13	ON: 1 or less OFF: 12 — 14	Waveform
Purge control solenoid valve 2		B137	15	ON: 1 or less OFF: 10 — 13	ON: 1 or less OFF: 12 — 14	Waveform
Manifold absolute pressure sensor	Signal	B137	20	1.7 — 2.4	1.1 — 1.6	—
	Power supply	B134	19	5	5	
	Ground (sensor)	B134	29	0	0	
SSM communication line		B135	14	1 or less ←→ 4 or more	1 or less ←→ 4 or more	—
Electric throttle control	Main	B134	18	0.64 — 0.72 Fully open: Approx. 4.04	0.64 — 0.72 (After engine is warmed up.)	Fully closed: Approx. 0.6 Fully open: Approx. 4.04
	Sub	B134	28	1.51 — 1.58 Fully open: Approx. 4.232	1.51 — 1.58 (After engine is warmed up.)	Fully closed: Approx. 1.48 Fully open: Approx. 4.232
	Power supply	B134	19	5	5	—
	Ground (sensor)	B134	29	0	0	—
Electronic throttle control motor (+)		B134	2	Duty waveform	Duty waveform	Drive frequency: 500 Hz

Description		Connector No.	Terminal No.	Signal (V)		Note
				Ignition SW ON (engine OFF)	Engine ON (idling)	
Electronic throttle control motor (–)		B134	1	Duty waveform	Duty waveform	Drive frequency: 500 Hz
Electronic throttle control motor power supply		B135	7	10 — 13	12 — 14	—
Electronic throttle control motor relay		B135	17	ON: 0 OFF: 10 — 13	ON: 0 OFF: 12 — 14	When ignition switch is turned to ON: ON
Intake oil flow control solenoid valve (LH)	Signal (+)	B134	17	ON: 10 — 13 OFF: 0	ON: 12 — 14 OFF: 0	—
	Signal (–)	B134	16	0	0	—
Intake oil flow control solenoid valve (RH)	Signal (+)	B134	34	ON: 10 — 13 OFF: 0	ON: 12 — 14 OFF: 0	—
	Signal (–)	B134	27	0	0	—
Exhaust oil flow control solenoid valve (LH)	Signal (+)	B134	5	ON: 10 — 13 OFF: 0	ON: 12 — 14 OFF: 0	—
	Signal (–)	B134	14	0	0	—
Exhaust oil flow control solenoid valve (RH)	Signal (+)	B134	7	ON: 10 — 13 OFF: 0	ON: 12 — 14 OFF: 0	—
	Signal (–)	B134	15	0	0	—
Intake camshaft position sensor (LH)		B137	16	0 or 5	0 or 5	Waveform
Intake camshaft position sensor (RH)		B137	24	0 or 5	0 or 5	Waveform
Exhaust camshaft position sensor (LH)		B137	29	0 or 5	0 or 5	Waveform
Exhaust camshaft position sensor (RH)		B137	23	0 or 5	0 or 5	Waveform
Camshaft position sensor ground		B137	30	0	0	—
Accelerator pedal position sensor	Main sensor signal	B135	23	Fully closed: 1 Fully opened: 3.3	Fully closed: 1 Fully opened: 3.3	—
	Shield	B136	4	0	0	—
	Main power supply	B135	21	5	5	—
	Ground (main sensor)	B135	29	0	0	—
	Sub signal sensor	B135	31	Fully closed: 1 Fully opened: 3.3	Fully closed: 1 Fully opened: 3.3	—
	Sub power supply	B135	22	5	5	—
	Ground (sub sensor)	B135	30	0	0	—
Starter relay		B135	26	ON: 0 OFF: 10 — 13	ON: 0 OFF: 12 — 14	ON: cranking
Clutch switch		B135	9	When clutch pedal is depressed: 0 When clutch pedal is released: 10 — 13	When clutch pedal is depressed: 0 When clutch pedal is released: 12 — 14	—

Engine Control Module (ECM) I/O Signal

Description		Connector No.	Terminal No.	Signal (V)		Note
				Ignition SW ON (engine OFF)	Engine ON (idling)	
Brake switch 1 (brake switch)		B136	15	When brake pedal is depressed: 0 When brake pedal is released: 10 — 13	When brake pedal is depressed: 0 When brake pedal is released: 12 — 14	—
Brake switch 2 (stop light switch)		B136	3	When brake pedal is depressed: 10 — 13 When brake pedal is released: 0	When brake pedal is depressed: 12 — 14 When brake pedal is released: 0	—
Cruise control command switch		B136	12	When operating nothing: 3.5 — 4.5 When operating RES/ACC: 2.5 — 3.5 When operating vehicle distance setting: 1.5 — 2.5 When operating SET/COAST: 0.5 — 1.5 When operating cancel: 0 — 0.5	When operating nothing: 3.5 — 4.5 When operating RES/ACC: 2.5 — 3.5 When operating vehicle distance setting: 1.5 — 2.5 When operating SET/COAST: 0.5 — 1.5 When operating cancel: 0 — 0.5	—
Cruise control main switch		B136	13	ON: 0 OFF: 5	ON: 0 OFF: 5	—
CAN communication	(Hi)	B136	17	—	—	—
	(Lo)	B136	28	—	—	—
Self-shutoff control		B135	13	0	0	—
Power steering oil pressure switch		B137	28	10 — 13	ON: 0 OFF: 12 — 14	—
Oil level switch		B136	26	0	0	Oil level LOW: 10 — 14
Tumble generator valve position sensor signal (RH)		B137	11	Fully closed: 0.43 — 1.19 Fully open: 2.83 — 4.69	Fully closed: 0.43 — 1.19 Fully open: 2.83 — 4.69	—
Tumble generator valve position sensor signal (LH)		B137	10	Fully closed: 0.43 — 1.19 Fully open: 2.83 — 4.69	Fully closed: 0.43 — 1.19 Fully open: 2.83 — 4.69	—
Tumble generator valve (RH closed)		B134	26	0 or 10 — 13	0 or 12 — 14	—
Tumble generator valve (LH closed)		B134	24	0 or 10 — 13	0 or 12 — 14	—
Tumble generator valve (RH open)		B134	25	0 or 10 — 13	0 or 12 — 14	—
Tumble generator valve (LH open)		B134	23	0 or 10 — 13	0 or 12 — 14	—
Immobilizer communication		B135	25	—	—	—
Fuel tank pressure sensor		B136	21	2.3 — 2.7	2.3 — 2.7	—
Pressure control solenoid valve		B135	3	ON: 1 or less OFF: 10 — 13	ON: 1 or less OFF: 12 — 14	—
Drain valve		B135	4	ON: 1 or less OFF: 10 — 13	ON: 1 or less OFF: 12 — 14	—
Fuel temperature sensor		B136	23	2.5 — 3.8	2.5 — 3.8	Outside temperature: 25°C (77°F)

Description		Connector No.	Terminal No.	Signal (V)		Note
				Ignition SW ON (engine OFF)	Engine ON (idling)	
Ground	Sensor	B134	29	0	0	—
		B135	30	0	0	—
	Engine 1	B134	6	0	0	—
	Engine 2	B134	4	0	0	—
	Engine 3	B134	3	0	0	—
	Engine 4	B137	1	0	0	—
	Engine 5	B137	3	0	0	—
	Body	B136	4	0	0	—

Input/output name:
- Crankshaft position sensor
- Intake camshaft position sensor RH
- Intake camshaft position sensor LH
- Exhaust camshaft position sensor RH
- Exhaust camshaft position sensor LH

Measuring condition:
- After warming-up
- At idling

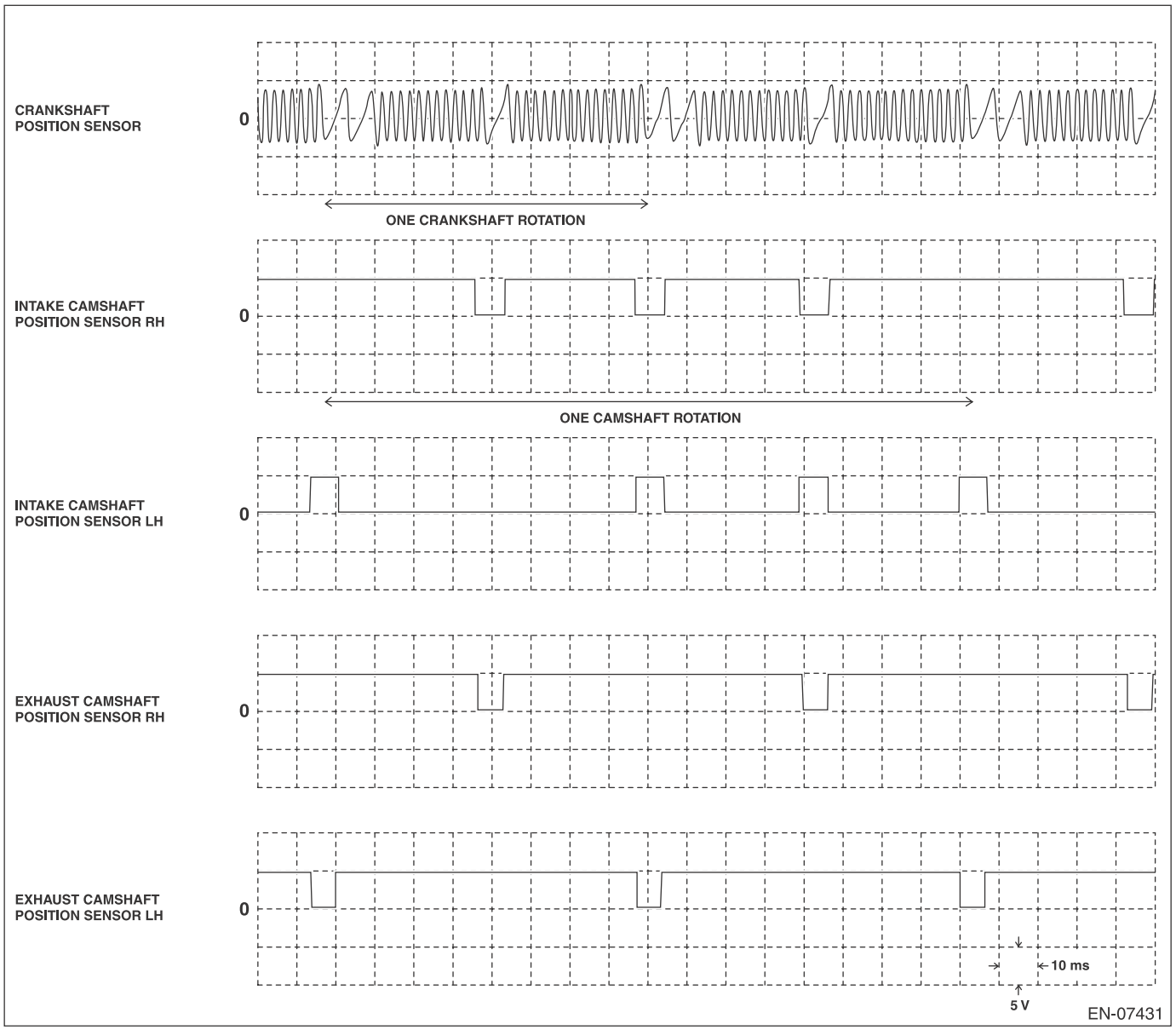

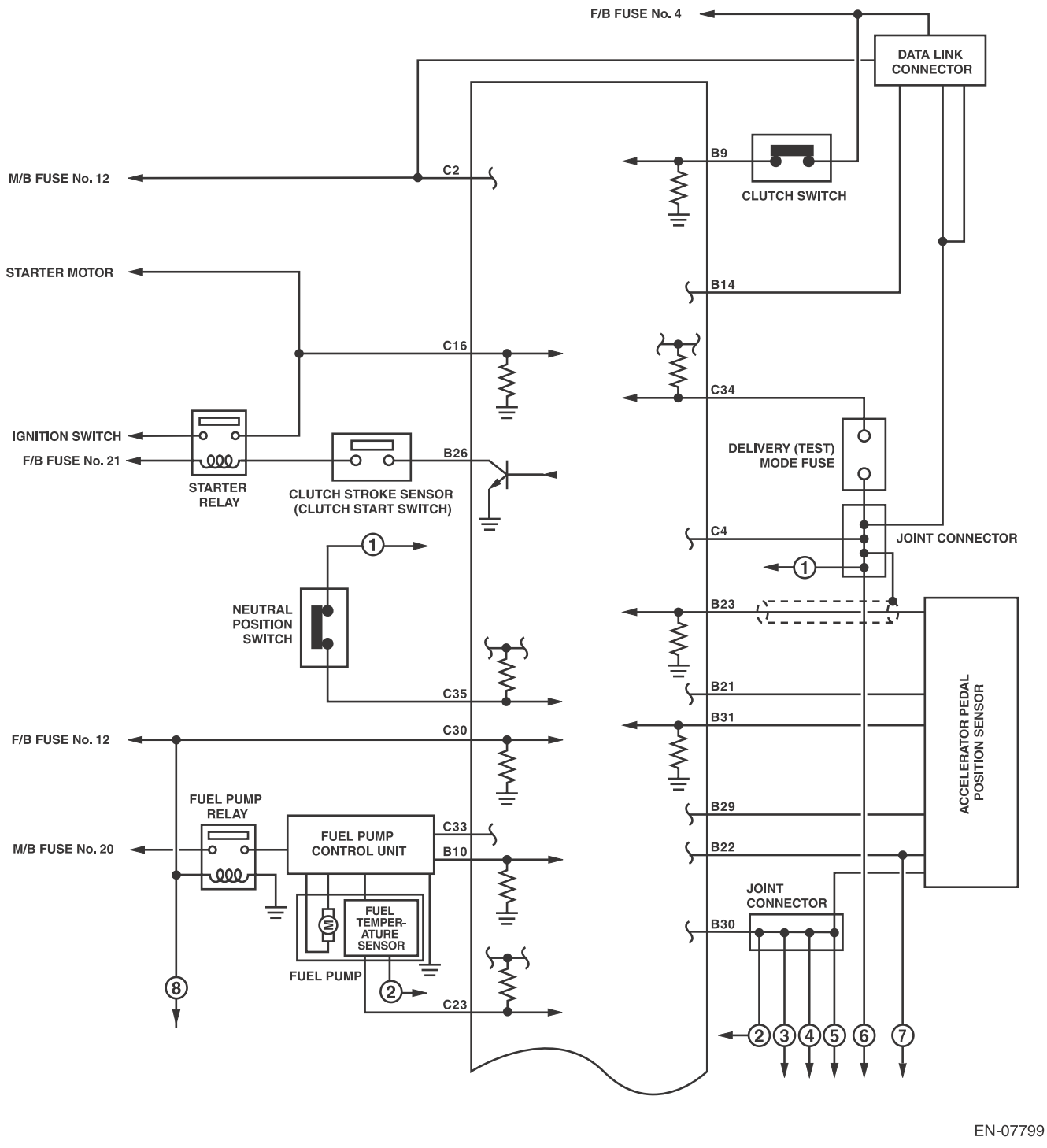
F/B FUSE No. 4
DATA LINK CONNECTOR
M/B FUSE No. 12
C2
B9
CLUTCH SWITCH
STARTER MOTOR
B14
C16
C34
IGNITION SWITCH
F/B FUSE No. 21
STARTER RELAY
B26
CLUTCH STROKE SENSOR (CLUTCH START SWITCH)
DELIVERY (TEST) MODE FUSE
C4
JOINT CONNECTOR
NEUTRAL POSITION SWITCH
B23
C35
B21
ACCELERATOR PEDAL POSITION SENSOR
F/B FUSE No. 12
C30
B31
FUEL PUMP RELAY
B29
M/B FUSE No. 20
FUEL PUMP CONTROL UNIT
C33
B10
B22
FUEL TEMPER-ATURE SENSOR
JOINT CONNECTOR
B30
FUEL PUMP
C23

EN-07799

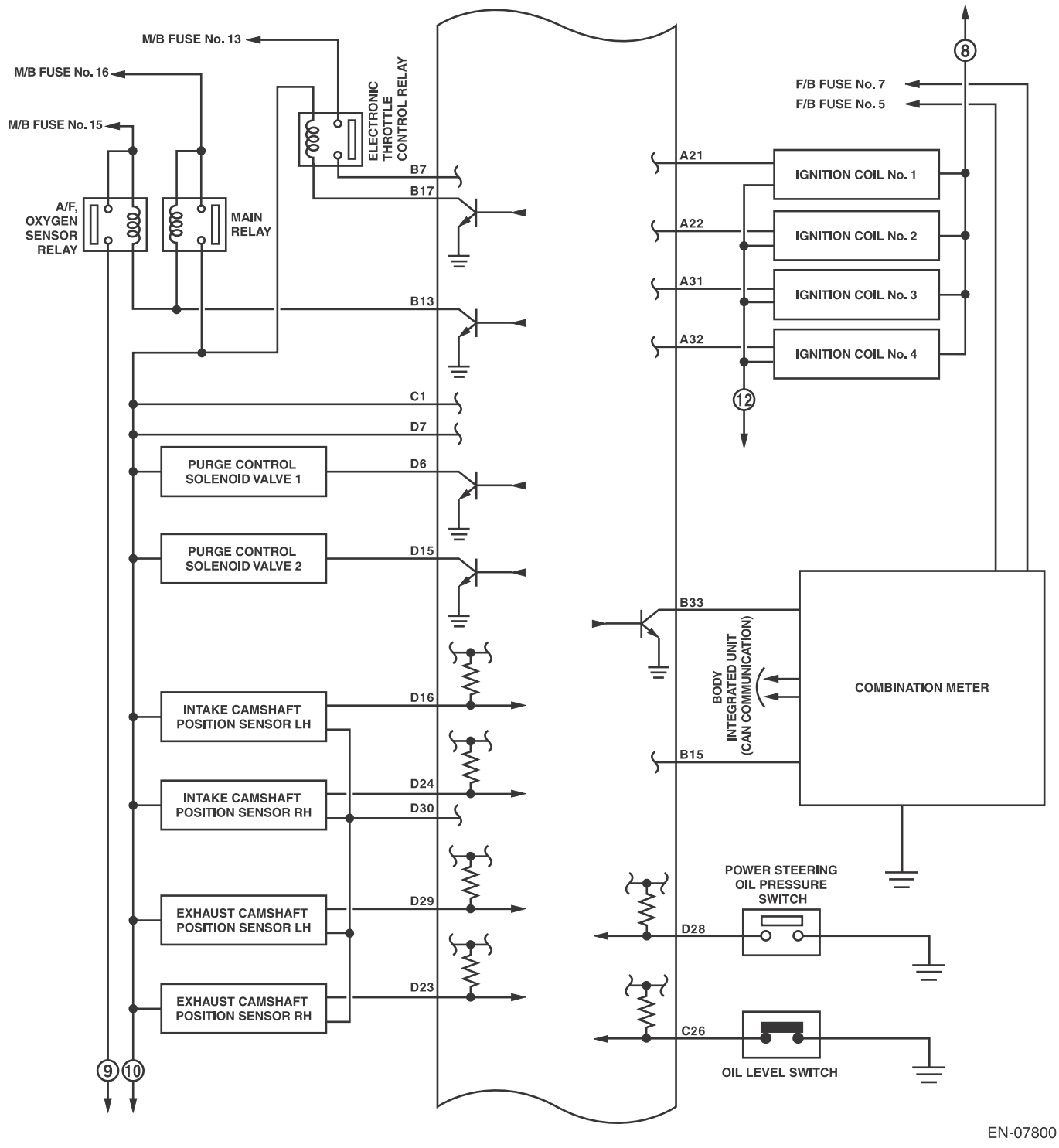
M/B FUSE No. 13
M/B FUSE No. 16
M/B FUSE No. 15
ELECTRONIC THROTTLE CONTROL RELAY
A/F, OXYGEN SENSOR RELAY
MAIN RELAY
B7
B17
B13
C1
D7
PURGE CONTROL SOLENOID VALVE 1
D6
PURGE CONTROL SOLENOID VALVE 2
D15
INTAKE CAMSHAFT POSITION SENSOR LH
D16
INTAKE CAMSHAFT POSITION SENSOR RH
D24
D30
EXHAUST CAMSHAFT POSITION SENSOR LH
D29
EXHAUST CAMSHAFT POSITION SENSOR RH
D23
9
10
8
F/B FUSE No. 7
F/B FUSE No. 5
A21
IGNITION COIL No. 1
A22
IGNITION COIL No. 2
A31
IGNITION COIL No. 3
A32
IGNITION COIL No. 4
12
B33
BODY INTEGRATED UNIT (CAN COMMUNICATION)
B15
COMBINATION METER
POWER STEERING OIL PRESSURE SWITCH
D28
C26
OIL LEVEL SWITCH
EN-07800

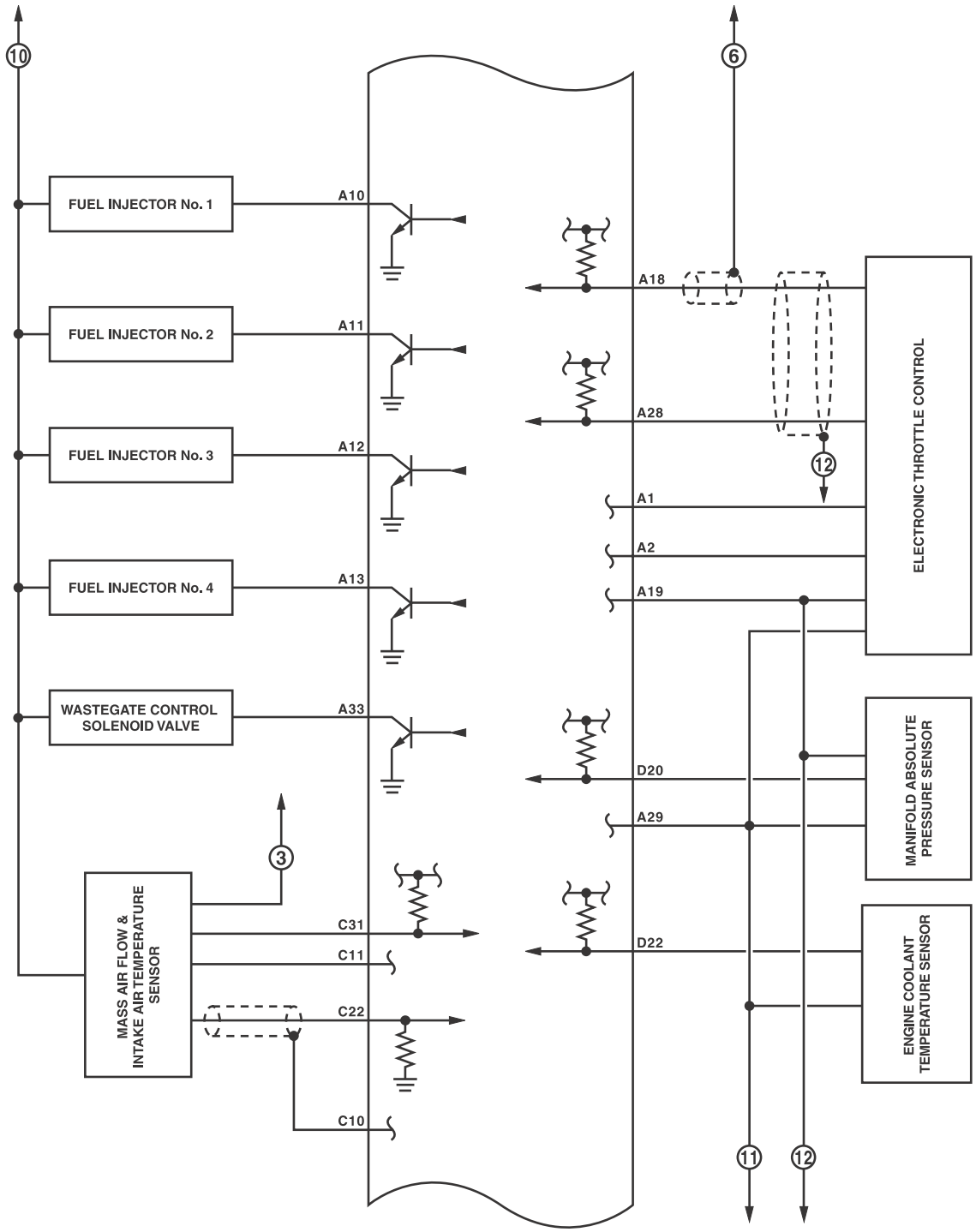
10
6
FUEL INJECTOR No. 1
A10
FUEL INJECTOR No. 2
A11
FUEL INJECTOR No. 3
A12
FUEL INJECTOR No. 4
A13
WASTEGATE CONTROL SOLENOID VALVE
A33
A18
A28
12
A1
A2
A19
ELECTRONIC THROTTLE CONTROL
D20
A29
MANIFOLD ABSOLUTE PRESSURE SENSOR
D22
ENGINE COOLANT TEMPERATURE SENSOR
3
MASS AIR FLOW & INTAKE AIR TEMPERATURE SENSOR
C31
C11
C22
C10
11
12

EN-07801

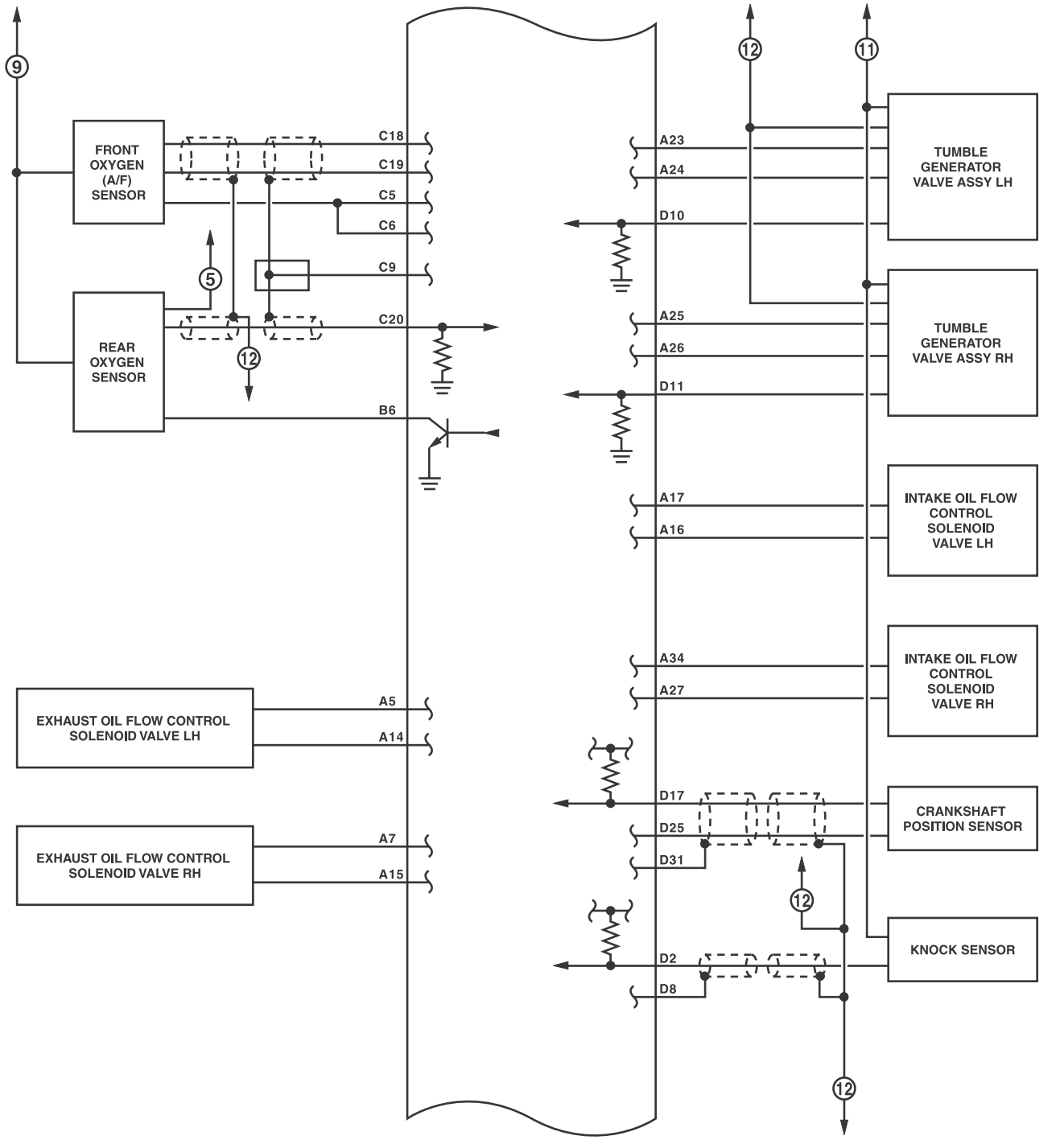
9
FRONT OXYGEN (A/F) SENSOR
REAR OXYGEN SENSOR
5
12
C18
C19
C5
C6
C9
C20
B6
EXHAUST OIL FLOW CONTROL SOLENOID VALVE LH
A5
A14
EXHAUST OIL FLOW CONTROL SOLENOID VALVE RH
A7
A15
12
11
A23
A24
D10
A25
A26
D11
A17
A16
A34
A27
D17
D25
D31
12
D2
D8
12
TUMBLE GENERATOR VALVE ASSY LH
TUMBLE GENERATOR VALVE ASSY RH
INTAKE OIL FLOW CONTROL SOLENOID VALVE LH
INTAKE OIL FLOW CONTROL SOLENOID VALVE RH
CRANKSHAFT POSITION SENSOR
KNOCK SENSOR

EN-07802

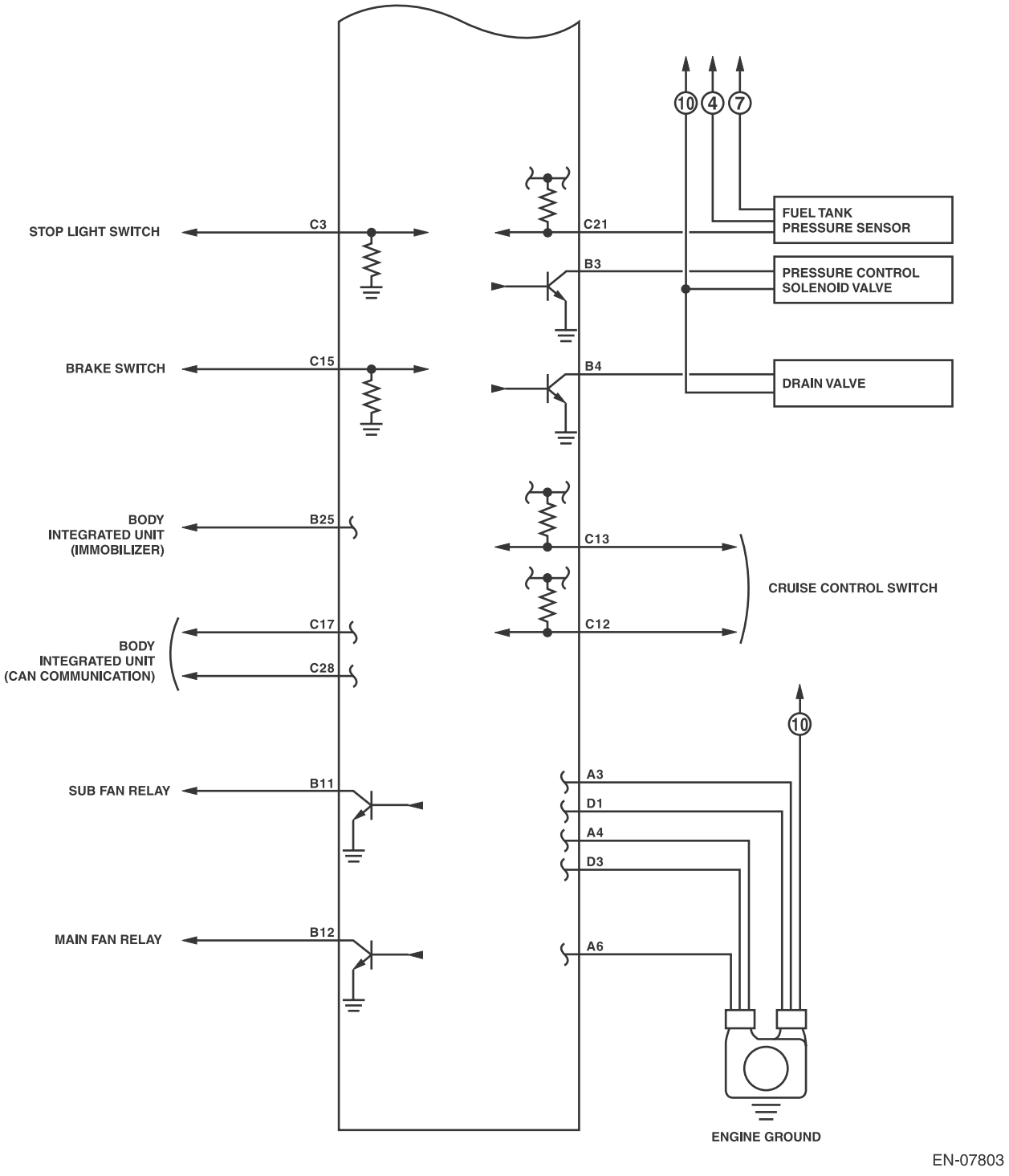
10
4
7
STOP LIGHT SWITCH
C3
C21
FUEL TANK PRESSURE SENSOR
B3
PRESSURE CONTROL SOLENOID VALVE
BRAKE SWITCH
C15
B4
DRAIN VALVE
BODY INTEGRATED UNIT (IMMOBILIZER)
B25
C13
CRUISE CONTROL SWITCH
C12
BODY INTEGRATED UNIT (CAN COMMUNICATION)
C17
C28
10
SUB FAN RELAY
B11
A3
D1
A4
D3
MAIN FAN RELAY
B12
A6
ENGINE GROUND
EN-07803

6. Engine Condition Data

A: ELECTRICAL SPECIFICATION

Remarks	Specification
Engine load	17.6 — 35.64 (%): Idling
	13.2 — 26.73 (%): 2,500 rpm racing

Measuring condition:
- After engine is warmed up.
- Place the shift lever in neutral position.
- Turn the A/C to OFF.
- Turn all the accessory switches to OFF.

7. Data Link Connector

A: NOTE

This connector is used for Subaru Select Monitor.

CAUTION:
Do not connect any scan tools other than Subaru Select Monitor or general scan tool because the circuit for Subaru Select Monitor may be damaged.

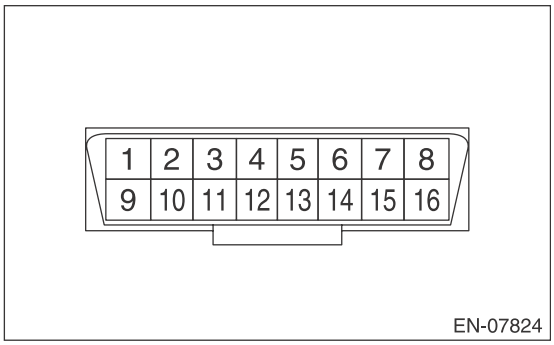

Terminal No.	Contents	Terminal No.	Contents
1	Empty	9	Empty
2	Empty	10	Empty
3	Empty	11	Empty
4	Ground	12	Empty
5	Ground	13	Empty
6	CAN communication (Hi)	14	CAN communication (Lo)
7	Subaru Select Monitor signal	15	Empty
8	Empty	16	Power supply

8. General Scan Tool

A: OPERATION

1. HOW TO USE GENERAL SCAN TOOL

1) Prepare a scan tool (general scan tool) required by SAE J1978.
2) Connect the general scan tool to the data link connector located in the lower portion of the instrument panel (on the driver's side).

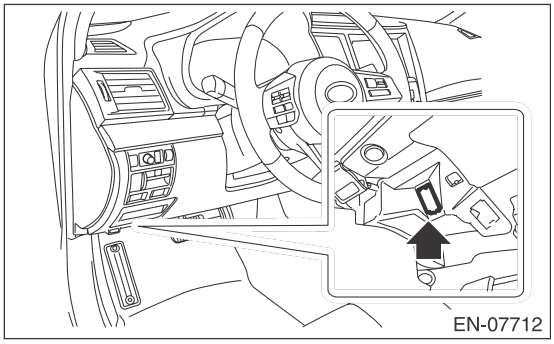

3) Using the general scan tool, call up each data. General scan tool functions consist of:
   (1) MODE $01: Current powertrain diagnostic data
   (2) MODE $02: Powertrain freeze frame data
   (3) MODE $03: Emission-related powertrain DTC
   (4) MODE $04: Clear/Reset emission-related diagnostic information
   (5) MODE $06: Request on-board monitoring test results for intermittently monitored systems
   (6) MODE $07: Request on-board monitoring test results for continuously monitored systems
   (7) MODE $09: Request vehicle information
4) Read out the data according to repair procedures. (For detailed operation procedure, refer to the general scan tool operation manual.)

NOTE:
For details concerning DTC, refer to "List of Diagnostic Trouble Code (DTC)". <Ref. to EN(H4DOTC)(diag)-78, List of Diagnostic Trouble Code (DTC).>

2. MODE $01 (CURRENT POWERTRAIN DIAGNOSTIC DATA)

Refer to data denoting the current operating condition of analog input/output, digital input/output or the powertrain system.
A list of the support data and PID (Parameter Identification) codes are shown in the following table.

PID	Data	Unit of measure
$01	Number of emission-related powertrain DTC, and malfunction indicator light status and diagnosis support information	—
$03	Fuel system control status	—
$04	Calculated engine load value	%
$05	Engine coolant temperature	°C
$06	Short term fuel trim	%
$07	Long term fuel trim	%
$0B	Intake manifold absolute pressure	kPa
$0C	Engine speed	rpm
$0D	Vehicle speed	MPH
$0E	Ignition timing advance	°
$0F	Intake air temperature	°C
$10	Intake air amount	g/s
$11	Throttle valve opening angle	%
$13	Air fuel ratio sensor	—
$15	Oxygen sensor output voltage and short term fuel trim associated with oxygen sensor	V and %
$1C	Supporting OBD system	—
$1F	Elapsed time after starting the engine	sec
$21	Running distance after MIL turns on	miles
$24	A/F value and A/F sensor output voltage	– and V
$2E	Evaporative purge	%
$2F	Fuel level	%
$30	Number of warm ups after DTC clear	—
$31	Travel distance after DTC clear	miles
$32	Fuel tank pressure	Pa
$33	Atmospheric pressure	kPa
$34	A/F sensor λ value, current	– and mA
$3C	Catalytic temperature	°C
$41	Diagnostic monitor of each drive cycle	—
$42	ECM power voltage	V
$43	Absolute load	%
$44	A/F target lambda	—
$45	Relative throttle opening angle	%
$46	Ambient temperature	°C
$47	Absolute throttle opening angle 2	%
$49	Absolute acceleration opening angle 1	%
$4A	Absolute acceleration opening angle 2	%
$4C	Target throttle opening angle	%
$4D	Engine operation time during MIL on	min
$4E	Elapsed time after DTC clear	min
$51	Fuel used	—
$5A	Relative acceleration opening angle	%
$65	Neutral status	—

NOTE:
Refer to general scan tool manufacturer's instruction manual to access the generic OBD-II PID (MODE $01).

3. MODE $02 (POWERTRAIN FREEZE FRAME DATA)

Refer to data denoting the operating condition when trouble is sensed by the on-board diagnosis system. A list of the support data and PID (Parameter Identification) codes are shown in the following table.

PID	Data	Unit of measure
$02	DTC that caused the freeze frame data storage required by CARB	—
$03	Fuel system control status	—
$04	Calculated engine load value	%
$05	Engine coolant temperature	°C
$06	Short term fuel trim	%
$07	Long term fuel trim	%
$0B	Intake manifold absolute pressure	kPa
$0C	Engine speed	rpm
$0D	Vehicle speed	MPH
$0E	Ignition timing advance	°
$0F	Intake air temperature	°C
$10	Intake air amount	g/s
$11	Throttle valve opening angle	%
$13	Air fuel ratio sensor	—
$15	Rear oxygen sensor voltage, compensation value	V and %
$1C	Supporting OBD system	—
$1F	Elapsed time after starting the engine	sec
$2E	Evaporative purge	%
$2F	Fuel level	%
$32	Fuel tank pressure	Pa
$33	Atmospheric pressure	kPa
$42	ECM power voltage	V
$43	Absolute load	%
$44	A/F target lambda	—
$45	Relative throttle opening angle	%
$46	Ambient temperature	°C
$47	Absolute throttle opening angle 2	%
$49	Absolute acceleration opening angle 1	%
$4A	Absolute acceleration opening angle 2	%
$4C	Target throttle opening angle	%
$65	Neutral status	—

NOTE:
Refer to general scan tool manufacturer's operation manual to access freeze frame data (MODE $02).

4. MODE $03 (EMISSION-RELATED POWERTRAIN DTC)

Refer to "List of Diagnostic Trouble Code (DTC)" for information about data denoting emission-related powertrain DTC. <Ref. to EN(H4DOTC)(diag)-78, List of Diagnostic Trouble Code (DTC).>

5. MODE $04 (CLEAR/RESET EMISSION-RELATED DIAGNOSTIC INFORMATION)

Refer to the mode used to clear or reset emission-related diagnostic information (OBD-II trouble diagnostic information).

NOTE:
- Refer to general scan tool manufacturer's instruction manual to clear the emission-related diagnostic information (MODE $04).
- Initial diagnosis of electronic throttle control is performed after memory clearance. Wait for 10 seconds or more after turning the ignition switch to ON, and then start the engine.

6. MODE $06

Refer to test value of troubleshooting and data of test limit indicated on the support data bit sequence table. A list of the support data is shown in the following table.

OBDMID	TID	SID	Diagnostic item
$01	$81	$0A	A/F sensor continuity failure (Bank 1 Sensor 1)
	$82	$8D	
	$83	$14	
	$84	$1E	A/F sensor range failure (Bank 1 Sensor 1)
	$85	$1E	
	$86	$20	A/F sensor response failure (Bank 1 Sensor 1)
$02	$87	$0B	Oxygen sensor circuit failure (Bank 1 Sensor 2)
	$88	$0B	
	$07	$0B	Oxygen sensor drop failure (Bank 1 Sensor 2)
	$08	$0B	
	$A5	$0B	
	$05	$10	Oxygen sensor response failure (Bank 1 Sensor 2)
	$06	$10	
$21	$89	$20	Catalyst deterioration diagnosis (Bank 1)
$35	$8B	$9D	VVT monitor bank 1
	$8C	$9D	
	$8D	$9D	
	$8E	$9D	
$36	$8B	$9D	VVT monitor bank 2
	$8C	$9D	
	$8D	$9D	
	$8E	$9D	
$39	$93	$FE	Evaporative emission control system leak detected (Fuel filler cap off)
$3B	$94	$FE	Evaporative emission control system (0.04 inch leak)
	$95	$FE	
	$A6	$FE	
$3C	$96	$FE	Evaporative emission control system (0.02 inch leak)
	$97	$FE	
$3D	$98	$FE	Evaporative emission control system (Purge flow)
$41	$99	$24	A/F sensor heater failure (Bank 1 Sensor 1)
	$9A	$24	
	$9B	$14	A/F sensor heater characteristics failure (Bank 1 Sensor 1)
$42	$9C	$24	Oxygen sensor heater failure (Bank 1 Sensor 2)
	$9D	$24	
$A1	$0B	$24	Misfire monitoring (All cylinders)
	$0C	$24	
$A2	$0B	$24	Misfire monitoring (#1 cylinder)
	$0C	$24	
$A3	$0B	$24	Misfire monitoring (#2 cylinder)
	$0C	$24	
$A4	$0B	$24	Misfire monitoring (#3 cylinder)
	$0C	$24	
$A5	$0B	$24	Misfire monitoring (#4 cylinder)
	$0C	$24	

7. MODE $07

Refer to the data of DTC (pending code) for troubleshooting result about emission in the first time.

8. MODE $09

Refer to the data of vehicle specification (V.I.N., calibration ID, etc.).

9. Subaru Select Monitor

A: OPERATION

1. HOW TO USE THE SUBARU SELECT MONITOR

NOTE:
For detailed operation procedures, refer to “PC application help for Subaru Select Monitor”.

2. READ CURRENT DATA FOR ENGINE (NORMAL MODE)

NOTE:
- For detailed operation procedures, refer to “PC application help for Subaru Select Monitor”.
- A list of the support data is shown in the following table.

Contents	Display	Unit of measure	Note (at idling)
Engine load	Engine Load	%	21.0%
Engine coolant temperature signal	Coolant Temp.	°C or °F	80 — 100°C or 176 — 212°F
A/F correction #1	A/F Correction #1	%	–10 — +10%
A/F learning #1	A/F Learning #1	%	–15 — +15%
Intake manifold absolute pressure	Mani. Absolute Pressure	mmHg, kPa, inHg or psig	220 — 275 mmHg, 29.5 — 37 kPa, 8.7 — 10 inHg or 4.2 — 5.3 psig
Engine speed signal	Engine Speed	rpm	630 — 770 rpm (Agree with the tachometer indication)
Meter vehicle speed signal	Vehicle Speed	km/h or MPH	0 km/h or 0 MPH (at parking)
Ignition timing signal	Ignition Timing	deg	10 — 15 deg
Intake air temperature signal	Intake Air Temp.	°C or °F	20 — 50°C or 68 — 122°F
Intake air amount	Mass Air Flow	g/s or lb/m	2.1 — 3.1 g/s or 0.35 — 0.40 lb/m
Throttle opening angle signal	Throttle Opening Angle	%	2.0 — 2.4%
Rear oxygen sensor voltage	Rear O2 Sensor	V	0 — 1.0 V
Battery voltage	Battery Voltage	V	12 — 15 V
Mass air flow voltage	Air Flow Sensor Voltage	V	1.0 — 1.7 V
Injection 1 pulse width	Fuel Injection #1 Pulse	ms	1.2 — 2.2 ms
Atmospheric pressure	Atmosphere Pressure	mmHg, kPa, inHg or psig	—
Intake manifold relative pressure	Mani. Relative Pressure	mmHg, kPa, inHg or psig	Air intake absolute pressure — Atmospheric pressure
Learned ignition timing	Learned Ignition Timing	deg	0 deg
Acceleration opening angle signal	Accel. Opening Angle	%	0.0%
Fuel temperature signal	Fuel Temp.	°C or °F	+28°C or 82°F
Primary supercharged pressure control signal	Primary Control	%	0.0%
Purge control solenoid duty ratio	CPC Valve Duty Ratio	%	0 — 25%
Tumble generator valve RH opening signal	TGV Position Sensor R	V	0.81 V
Tumble generator valve LH opening signal	TGV Position Sensor L	V	0.81 V
Fuel pump duty ratio	Fuel Pump Duty	%	30 — 40%
AVCS advance angle amount RH	VVT Adv. Ang. Amount R	deg	±5 deg
AVCS advance angle amount LH	VVT Adv. Ang. Amount L	deg	±5 deg
Oil flow control solenoid valve duty ratio RH	OCV Duty R	%	0 — 20%
Oil flow control solenoid valve duty ratio LH	OCV Duty L	%	0 — 20%
Oil flow control solenoid valve current RH	OCV Current R	mA	40 — 100 mA
Oil flow control solenoid valve current LH	OCV Current L	mA	40 — 100 mA
A/F sensor current value 1	A/F Sensor #1 Current	mA	–20 — 20 mA
A/F sensor resistance value 1	A/F Sensor #1 Resistance	Ω	27 — 35 mA
A/F sensor output lambda 1	A/F Sensor #1	—	1.0

Contents	Display	Unit of measure	Note (at idling)
A/F correction #3	A/F Correction #3	%	0.00%
A/F learning #3	A/F Learning #3	%	0.00%
Throttle motor duty	Throttle Motor Duty	%	–5%
Throttle motor voltage	Throttle Motor Voltage	V	12 — 15 V
Sub throttle sensor voltage	Sub-Throttle Sensor	V	1.5 V
Main throttle sensor voltage	Main-Throttle Sensor	V	0.6 V
Sub accelerator sensor voltage	Sub-Accelerator Sensor	V	1.1 V
Main acceleration sensor voltage	Main-Accelerator Sensor	V	1.0 V
Memory vehicle speed	Memorized Cruise Speed	km/h or MPH	—
Fuel level sensor resistance	Fuel level resistance	Ω	4 — 96 Ω
Odometer	Odometer	km	—
Exhaust AVCS retard angle amount RH	Exh. VVT Retard Ang. R	deg	±5 deg
Exhaust AVCS retard angle amount LH	Exh. VVT Retard Ang. L	deg	±5 deg
Exhaust oil flow control solenoid valve duty ratio RH	Exh. OCV Duty R	%	0 — 20%
Exhaust oil flow control solenoid valve duty ratio LH	Exh. OCV Duty L	%	0 — 20%
Exhaust oil flow control solenoid valve current value RH	Exh. OCV Current R	mA	40 — 100 mA
Exhaust oil flow control solenoid valve current value LH	Exh. OCV Current L	mA	40 — 100 mA
#1 cylinder roughness monitor	Roughness Monitor #1	—	0
#2 cylinder roughness monitor	Roughness Monitor #2	—	0
#3 cylinder roughness monitor	Roughness Monitor #3	—	0
#4 cylinder roughness monitor	Roughness Monitor #4	—	0
Knock sensor correction	Knocking Correction	deg	0.0 deg
Fuel tank pressure signal	Fuel Tank Pressure	mmHg, kPa, inHg or psig	+8.8 mmHg, +1.2 kPa, +0.4 inHg or 0.2 psig
AT vehicle ID signal	AT Vehicle ID Signal	—	OFF
Delivery (test) mode terminal	Test Mode Signal	—	OFF
D-check require Flag	D-check Require Flag	—	OFF
Delivery (test) mode terminal	Delivery Mode Connector (Test Mode Connector)	—	OFF
Neutral position switch signal	Neutral Position Switch	—	ON
Soft idle switch signal	Idle Switch Signal	—	ON
Ignition switch signal	Ignition Switch	—	ON
Power steering switch signal	P/S Switch Signal	—	OFF (when OFF)
Air conditioning switch signal	A/C Switch	—	OFF (when OFF)
Starter switch signal	Starter Switch	—	OFF
Rear oxygen monitor	Rear O2 Rich Signal	—	Rich/Lean
Knocking signal	Knocking Signal	—	OFF
Crankshaft position sensor signal	Crankshaft Position Sig.	—	ON
Camshaft position sensor signal	Camshaft Position Sig.	—	ON
Rear defogger switch signal	Rear Defogger SW	—	OFF (when OFF)
Blower fan switch signal	Blower Fan SW	—	OFF (when OFF)
Light switch signal	Light Switch	—	OFF (when OFF)
Radiator fan relay 1 signal	Radiator Fan Relay #1	—	OFF (when OFF)
Radiator fan relay 2 signal	Radiator Fan Relay #2	—	OFF (when OFF)
Pressure control solenoid valve signal	PCV Solenoid Valve	—	OFF (when OFF)
Tumble generator valve output signal	TGV Output	—	OFF
Tumble generator valve driving signal	TGV Drive	—	Closing direction

Contents	Display	Unit of measure	Note (at idling)
Drain valve signal	Vent. Solenoid Valve	—	OFF (when OFF)
Purge control solenoid valve 2 signal	CPC Solenoid 2	—	OFF (when OFF)
Vehicle dynamics control (VDC) torque down prohibition output	Ban of Torque Down	—	ON
Vehicle dynamics control (VDC) torque down demand	Request Torque Down VDC	—	OFF
ETC motor relay signal	ETC Motor Relay	—	ON
Clutch switch signal	Clutch Switch	—	OFF (when OFF)
Stop light switch signal	Stop Light Switch	—	OFF (when OFF)
SET/COAST switch signal	SET/COAST Switch	—	OFF (when OFF)
RES/ACC switch signal	RESUME/ACCEL Switch	—	OFF (when OFF)
Brake switch signal	Brake Switch	—	OFF (when OFF)
Main switch signal	Main Switch	—	OFF (when OFF)
Body integrated unit data reception	Body Int. Unit Data	—	ON
Body integrated unit counter update	Body Int. Unit Count	—	ON
Cruise control cancel switch signal	CC Cancel SW	—	OFF (when OFF)
Malfunction indicator light signal	MIL On Flag	—	OFF (when unlit)
Oil level switch signal	Oil level switch	—	HIGH level

3. READ CURRENT DATA FOR ENGINE (OBD MODE)

NOTE:
- For detailed operation procedures, refer to “PC application help for Subaru Select Monitor”.
- A list of the support data is shown in the following table.

Contents	Display	Referential value (at idling)	Unit of measure
Number of diagnosis code	Number of Diag. Code:	0	—
Condition of malfunction indicator light	MI(MIL)	OFF	—
Monitoring test of misfire	Misfire monitoring (Supp)	YES	—
Monitoring test of misfire	Misfire monitoring (Rdy)	YES	—
Monitoring test of fuel system	Fuel system monitoring (Supp)	YES	—
Monitoring test of fuel system	Fuel system monitoring (Rdy)	YES	—
Monitoring test of comprehensive component	Component monitoring (Supp)	YES	—
Monitoring test of comprehensive component	Component monitoring (Rdy)	YES	—
Test of catalyst	Catalyst Diagnosis (Supp)	YES	—
Test of catalyst	Catalyst Diagnosis (Rdy)	NO	—
Test of heating-type catalyst	Heated catalyst (Supp)	NO	—
Test of heating-type catalyst	Heated catalyst (Rdy)	N/A	—
Test of evaporative emission purge control system	Evaporative purge system (Supp)	YES	—
Test of evaporative emission purge control system	Evaporative purge system (Rdy)	NO	—
Secondary air system test	Secondary air system (Supp)	NO	—
Secondary air system test	Secondary air system (Rdy)	N/A	—
Test of air conditioning system refrigerant	A/C system refrigerant (Supp)	NO	—
Test of air conditioning system refrigerant	A/C system refrigerant (Rdy)	N/A	—
Test of oxygen sensor	Oxygen sensor (Supp)	YES	—
Test of oxygen sensor	Oxygen sensor (Rdy)	NO	—

Contents	Display	Referential value (at idling)	Unit of measure
Test of oxygen sensor heater	O2 Heater Diagnosis (Supp)	YES	—
Test of oxygen sensor heater	O2 Heater Diagnosis (Rdy)	YES	—
Test of EGR system	EGR system (Supp)	NO	—
Test of EGR system	EGR system (Rdy)	N/A	—
Air fuel ratio control system for bank 1	Fuel system for Bank 1	Cl_normal	—
Engine load data	Calculated load value	19.2	%
Engine coolant temperature signal	Coolant Temp.	96	°C
Short term fuel trim by front oxygen (A/F) sensor (Bank 1)	Short term fuel trim B1	17.2	%
Long term fuel trim by front oxygen (A/F) sensor (Bank 1)	Long term fuel trim B1	5.5	%
Intake manifold absolute pressure signal	Mani. Absolute Pressure	32	kPa
Engine speed signal	Engine Speed	846	rpm
Vehicle speed signal	Vehicle Speed	0	km/h
#1 Cylinder ignition timing	Ignition timing adv. #1	13.5	°
Intake air temperature signal	Intake Air Temp.	44	°C
Intake air amount	Mass Air Flow	3.6	g/s
Throttle position signal	Throttle Opening Angle	13	%
Oxygen sensor (Bank 1 Sensor 2)	Oxygen sensor #12	0.1 — 0.7	V
A/F correction (Bank 1 Sensor 2)	Short term fuel trim #12	0.0	%
On-board diagnostic system	OBD System	OBD/OBD2	—
Front oxygen (A/F) sensor (Bank 1 Sensor 1)	Oxygen sensor #11	Supported	—
Oxygen sensor (Bank 1 Sensor 2)	Oxygen sensor #12	Supported	—
Elapsed time after engine start	Time Since Engine Start	—	sec
Travel distance after the malfunction indicator light illuminates	Lighted MI lamp history	—	km
A/F lambda signal (Bank 1 Sensor 1)	A/F Sensor #11	0.951	—
A/F sensor output signal (Bank 1 Sensor 1)	A/F Sensor #11	2.468	V
Evaporative purge	Commanded Evap Purge	0	%
Fuel level signal	Fuel Level	—	%
Number of warm ups after DTC clear	Number of warm-ups	—	—
Travel distance after DTC clear	Meter since DTC cleared	—	km
Fuel tank pressure signal	Fuel Tank Pressure	1171.5	Pa
Atmospheric pressure signal	Atmosphere Pressure	Atmospheric pressure	kPa
A/F lambda signal (Bank 1 Sensor 1)	A/F Sensor #11	0.957	—
A/F sensor output signal (Bank 1 Sensor 1)	A/F Sensor #11	–0.18	mA
Catalyst temperature #1	Catalyst Temperature #11	—	°C
Monitoring test of misfire	Misfire monitoring (Enable)	YES	—
Monitoring test of misfire	Misfire monitoring (Comp)	YES	—
Monitoring test of fuel system	Fuel system monitoring (Enable)	YES	—
Monitoring test of fuel system	Fuel system monitoring (Comp)	YES	—
Monitoring test of comprehensive component	Component monitoring (Enable)	NO	—
Monitoring test of comprehensive component	Component monitoring (Comp)	NO	—
Test of catalyst	Catalyst Diagnosis (Enable)	YES	—
Test of catalyst	Catalyst Diagnosis (Comp)	NO	—
Test of heating-type catalyst	Heated catalyst (Enable)	N/A	—
Test of heating-type catalyst	Heated catalyst (Comp)	N/A	—

Contents	Display	Referential value (at idling)	Unit of measure
Test of evaporative emission purge control system	Evaporative purge system (Enable)	NO	—
Test of evaporative emission purge control system	Evaporative purge system (Comp)	NO	—
Secondary air system test	Secondary air system (Enable)	N/A	—
Secondary air system test	Secondary air system (Comp)	N/A	—
Test of air conditioning system refrigerant	A/C system refrigerant (Enable)	N/A	—
Test of air conditioning system refrigerant	A/C system refrigerant (Comp)	N/A	—
Test of oxygen sensor	Oxygen sensor (Enable)	YES	—
Test of oxygen sensor	Oxygen sensor (Comp)	NO	—
Test of oxygen sensor heater	O2 Heater Diagnosis (Enable)	YES	—
Test of oxygen sensor heater	O2 Heater Diagnosis (Comp)	YES	—
Test of EGR system	EGR system (Enable)	N/A	—
Test of EGR system	EGR system (Comp)	N/A	—
ECM power supply voltage	Control module voltage	13.848	V
Absolute load	Absolute Load Value	21	%
A/F target lambda	Target Equivalence Ratio	0.993	—
Relative throttle opening angle	Relative Throttle Pos.	2	%
Ambient temperature	Ambient Temperature	Ambient temperature	°C
Absolute throttle opening angle 2	Absolute Throttle Pos.#2	31	%
Absolute accelerator opening angle 1	Accelerator Pedal Pos.#1	13	%
Absolute accelerator opening angle 2	Accelerator Pedal Pos.#2	13	%
Target throttle opening angle	Target Throt. Act. Cont.	0	%
Engine operating time while malfunction indicator light lit	Time while MIL lighted	—	min
Elapsed time after DTC clear	Time since DTC cleared	—	min
Type of fuel	Type of fuel	GAS	—
Relative acceleration opening angle	Relative Accelera. Pos.	0	%
Neutral condition	MT gear status	NEUT	—

4. READ FREEZE FRAME DATA FOR ENGINE (OBD MODE)

NOTE:
- For detailed operation procedures, refer to “PC application help for Subaru Select Monitor”.
- A list of the support data is shown in the following table.

Contents	Display	Unit of measure
DTC of freeze frame data	Freeze frame data	DTC
Air fuel ratio control system for bank 1	Fuel system for Bank 1	—
Engine load data	Calculated load value	%
Engine coolant temperature signal	Coolant Temp.	°C or °F
Short term fuel trim by front oxygen (A/F) sensor (Bank 1)	Short term fuel trim B1	%
Long term fuel trim by front oxygen (A/F) sensor (Bank 1)	Long term fuel trim B1	%
Intake manifold absolute pressure signal	Mani. Absolute Pressure	mmHg, kPa, inHg or psi
Engine speed signal	Engine Speed	rpm
Vehicle speed signal	Vehicle Speed	km/h or MPH
Ignition timing adv. #1	Ignition timing adv. #1	°
Intake air temperature	Intake Air Temp.	°C
Amount of intake air	Mass Air Flow	g/s
Throttle valve angle	Throttle Opening Angle	%
Oxygen sensor #12	Oxygen sensor #12	V
A/F correction #12	Short term fuel trim #12	%
OBD system	OBD System	—
Oxygen sensor #11	Oxygen sensor #11	Supported
Oxygen sensor #12	Oxygen sensor #12	Supported
Elapsed time after starting engine	Time Since Engine Start	sec
Evaporative purge	Commanded Evap Purge	%
Fuel level	Fuel Level	%
Fuel tank pressure	Fuel Tank Pressure	mmHg, Pa, inHg or psig
Atmospheric pressure	Atmosphere Pressure	mmHg, kPa, inHg or psig
ECM power supply voltage	Control module voltage	V
Absolute load	Absolute Load Value	%
A/F target lambda	Target Equivalence Ratio	—
Relative throttle opening angle	Relative Throttle Pos.	%
Ambient temperature	Ambient Temperature	°C or °F
Absolute throttle opening angle 2	Absolute Throttle Pos.#2	%
Absolute accelerator opening angle 1	Accelerator Pedal Pos.#1	%
Absolute accelerator opening angle 2	Accelerator Pedal Pos.#2	%
Target throttle opening angle	Target Throt. Act. Cont.	%
Neutral condition	MT gear status	—

5. V.I.N. REGISTRATION

1) On «Main Menu» display, select {Each System Check}.
2) On «System Selection Menu» display, select {Engine Control System}.
3) Click the [OK] button after the information of engine type has been displayed.
4) On «Engine Diagnosis» display, select {Entry VIN}.
5) Perform the procedures shown on the display screen.

10. Read Diagnostic Trouble Code (DTC)

A: OPERATION

1. SUBARU SELECT MONITOR

NOTE:
• For detailed operation procedures, refer to “PC application help for Subaru Select Monitor”.
• For details concerning DTC, refer to “List of Diagnostic Trouble Code (DTC)”. <Ref. to EN(H4DOTC)(diag)-78, List of Diagnostic Trouble Code (DTC).>

2. GENERAL SCAN TOOL

Refer to data denoting emission-related powertrain DTC.
For details concerning DTC, refer to “List of Diagnostic Trouble Code (DTC)”. <Ref. to EN(H4DOTC)(diag)-78, List of Diagnostic Trouble Code (DTC).>

NOTE:
Refer to general scan tool manufacturer’s instruction manual to access powertrain DTC (MODE $03).

11.Inspection Mode

A: PROCEDURE

Perform the diagnosis shown in the following DTC table.
When performing the diagnosis not listed in “List of Diagnostic Trouble Code (DTC)”, refer to the item on the drive cycle. <Ref. to EN(H4DOTC)(diag)-49, Drive Cycle.>

DTC	Item	Condition
P0011	Intake Camshaft Position - Timing Over-Advanced or System Performance (Bank 1)	—
P0014	Exhaust AVCS System 1 (Range/Performance)	—
P0016	Crankshaft Position - Camshaft Position Correlation (Bank1)	—
P0017	Crank and Cam Timing B System Failure (Bank 1)	—
P0018	Crankshaft Position - Camshaft Position Correlation (Bank2)	—
P0019	Crank and Cam Timing B System Failure (Bank 2)	—
P0021	Intake Camshaft Position - Timing Over-Advanced or System Performance (Bank 2)	—
P0024	Exhaust AVCS System 2 (Range/Performance)	—
P0031	HO2S Heater Control Circuit Low (Bank 1 Sensor 1)	—
P0032	HO2S Heater Control Circuit High (Bank 1 Sensor 1)	—
P0037	HO2S Heater Control Circuit Low (Bank 1 Sensor 2)	—
P0038	HO2S Heater Control Circuit High (Bank 1 Sensor 2)	—
P0102	Mass or Volume Air Flow Circuit Low Input	—
P0103	Mass or Volume Air Flow Circuit High Input	—
P0107	Manifold Absolute Pressure/Barometric Pressure Circuit Low Input	—
P0108	Manifold Absolute Pressure/Barometric Pressure Circuit High Input	—
P0112	Intake Air Temperature Sensor 1 Circuit Low	—
P0113	Intake Air Temperature Sensor 1 Circuit High	—
P0117	Engine Coolant Temperature Circuit Low	—
P0118	Engine Coolant Temperature Circuit High	—
P0122	Throttle/Pedal Position Sensor/Switch “A” Circuit Low	—
P0123	Throttle/Pedal Position Sensor/Switch “A” Circuit High	—
P0131	O2 Sensor Circuit Low Voltage (Bank 1 Sensor 1)	—
P0132	O2 Sensor Circuit High Voltage (Bank 1 Sensor 1)	—
P0137	O2 Sensor Circuit Low Voltage (Bank 1 Sensor 2)	—
P0138	O2 Sensor Circuit High Voltage (Bank 1 Sensor 2)	—
P0140	O2 Sensor Circuit No Activity Detected (Bank 1 Sensor 2)	—
P0182	Fuel Temperature Sensor “A” Circuit Low Input	—
P0183	Fuel Temperature Sensor “A” Circuit High Input	—
P0222	Throttle/Pedal Position Sensor/Switch “B” Circuit Low	—
P0223	Throttle/Pedal Position Sensor/Switch “B” Circuit High	—
P0230	Fuel Pump Primary Circuit	—
P0245	Turbo/Super Charger Wastegate Solenoid “A” Low	—
P0327	Knock Sensor 1 Circuit Low (Bank 1 or Single Sensor)	—
P0328	Knock Sensor 1 Circuit High (Bank 1 or Single Sensor)	—
P0335	Crankshaft Position Sensor “A” Circuit	—
P0336	Crankshaft Position Sensor “A” Circuit Range/Performance	—
P0340	Camshaft Position Sensor “A” Circuit (Bank 1 or Single Sensor)	—
P0345	Camshaft Position Sensor “A” Circuit (Bank 2)	—
P0365	Camshaft Position Sensor “B” Circuit (Bank 1)	—
P0390	Camshaft Position Sensor “B” Circuit (Bank 2)	—
P0447	Evaporative Emission Control System Vent Control Circuit Open	—

DTC	Item	Condition
P0448	Evaporative Emission Control System Vent Control Circuit Shorted	—
P0452	Evaporative Emission Control System Pressure Sensor Low Input	—
P0453	Evaporative Emission Control System Pressure Sensor High Input	—
P0458	Evaporative Emission System Purge Control Valve Circuit Low	—
P0462	Fuel Level Sensor “A” Circuit Low	—
P0463	Fuel Level Sensor “A” Circuit High	—
P0500	Vehicle Speed Sensor “A”	—
P0512	Starter Request Circuit	—
P0513	Incorrect Immobilizer Key	—
P0604	Internal Control Module Random Access Memory (RAM) Error	—
P0605	Internal Control Module Read Only Memory (ROM) Error	—
P0607	Throttle Control System Circuit Range/Performance	—
P0638	Throttle Actuator Control Range/Performance (Bank 1)	—
P0851	Park/Neutral Switch Input Circuit Low	—
P0852	Park/Neutral Switch Input Circuit High	—
P1152	O2 Sensor Circuit Range/Performance (Low) (Bank1 Sensor1)	—
P1153	O2 Sensor Circuit Range/Performance (High) (Bank1 Sensor1)	—
P1160	Return Spring Failure	—
P1400	Fuel Tank Pressure Control Solenoid Valve Circuit Low	—
P1420	Fuel Tank Pressure Control Sol. Valve Circuit High	—
P1518	Starter Switch Circuit Low Input	—
P1560	Back-Up Voltage Circuit Malfunction	—
P1570	Antenna	—
P1571	Reference Code Incompatibility	—
P1572	IMM Circuit Failure	—
P1574	Key Communication Failure	—
P1576	EGI Control Module EEPROM	—
P1577	IMM Control Module EEPROM	—
P1578	Meter Failure	—
P2006	Intake Manifold Runner Control Stuck Closed (Bank 1)	—
P2007	Intake Manifold Runner Control Stuck Closed (Bank 2)	—
P2008	Intake Manifold Runner Control Circuit / Open (Bank 1)	—
P2009	Intake Manifold Runner Control Circuit Low (Bank 1)	—
P2011	Intake Manifold Runner Control Circuit / Open (Bank 2)	—
P2012	Intake Manifold Runner Control Circuit Low (Bank 2)	—
P2016	Intake Manifold Runner Position Sensor / Switch Circuit Low (Bank 1)	—
P2017	Intake Manifold Runner Position Sensor / Switch Circuit High (Bank 1)	—
P2021	Intake Manifold Runner Position Sensor / Switch Circuit Low (Bank 2)	—
P2022	Intake Manifold Runner Position Sensor / Switch Circuit High (Bank 2)	—
P2088	Intake Camshaft Position Actuator Control Circuit Low (Bank 1)	—
P2089	Intake Camshaft Position Actuator Control Circuit High (Bank 1)	—
P2090	Exhaust Camshaft Position Actuator Control Circuit Low (Bank 1)	—
P2091	Exhaust Camshaft Position Actuator Control Circuit High (Bank 1)	—
P2092	Intake Camshaft Position Actuator Control Circuit Low (Bank 2)	—
P2093	Intake Camshaft Position Actuator Control Circuit High (Bank 2)	—
P2094	Exhaust Camshaft Position Actuator Control Circuit Low (Bank 2)	—
P2095	Exhaust Camshaft Position Actuator Control Circuit High (Bank 2)	—
P2101	Throttle Actuator Control Motor Circuit Range/Performance	—
P2102	Throttle Actuator Control Motor Circuit Low	—
P2103	Throttle Actuator Control Motor Circuit High	—

DTC	Item	Condition
P2109	Throttle/Pedal Position Sensor “A” Minimum Stop Performance	—
P2122	Throttle/Pedal Position Sensor/Switch “D” Circuit Low Input	—
P2123	Throttle/Pedal Position Sensor/Switch “D” Circuit High Input	—
P2127	Throttle/Pedal Position Sensor/Switch “E” Circuit Low Input	—
P2128	Throttle/Pedal Position Sensor/Switch “E” Circuit High Input	—
P2135	Throttle/Pedal Position Sensor/Switch “A”/“B” Voltage Correlation	—
P2138	Throttle/Pedal Position Sensor/Switch “D”/“E” Voltage Correlation	—
P2227	Atmospheric Pressure Sensor Range/Performance	—
P2228	Barometric Pressure Circuit Low	—
P2229	Barometric Pressure Circuit High	—
P2419	Evaporative Emission System Switching Valve Control Circuit Low	—
P2420	Evaporative Emission System Switching Valve Control Circuit High	—
U0073	CAN Failure, Bus ‘OFF’ Detection	—
U0101	CAN (TCU) Data not Loaded	—
U0122	CAN (VDC) Data not Loaded	—
U0140	CAN (BCU) Data not Loaded	—
U0402	CAN (TCU) Data Abnormal	—
U0416	CAN (VDC) Data Abnormal	—
U0422	CAN (BCU) Data Abnormal	—

1. PREPARATION FOR THE INSPECTION MODE

1) Check that the battery voltage is 12 V or more and fuel remains approx. half [20 — 40 ℓ (5.3 — 10.6 US gal, 4.4 — 8.8 Imp gal)].
2) Lift up the vehicle using a garage jack and place it on rigid racks, or drive the vehicle onto free rollers.

WARNING:
• Before lifting up the vehicle, ensure parking brakes are applied.
• Do not use a pantograph jack in place of a rigid rack.
• Secure a rope or wire to the front or rear towing hooks to prevent the lateral runout of front wheels.
• Before rotating the wheels, make sure that there is no one in front of the vehicle. Besides while the wheels are rotating, make sure that no one approaches the vehicle front side.
• Make sure that there is nothing around the wheels. For AWD model, pay special attention to all four wheels.
• While servicing, do not depress or release the clutch pedal or accelerator pedal quickly regardless of the engine speed. Quick operation may cause the vehicle to drop off the free roller.
• To prevent the vehicle from slipping due to vibration, do not place anything between rigid rack and the vehicle.

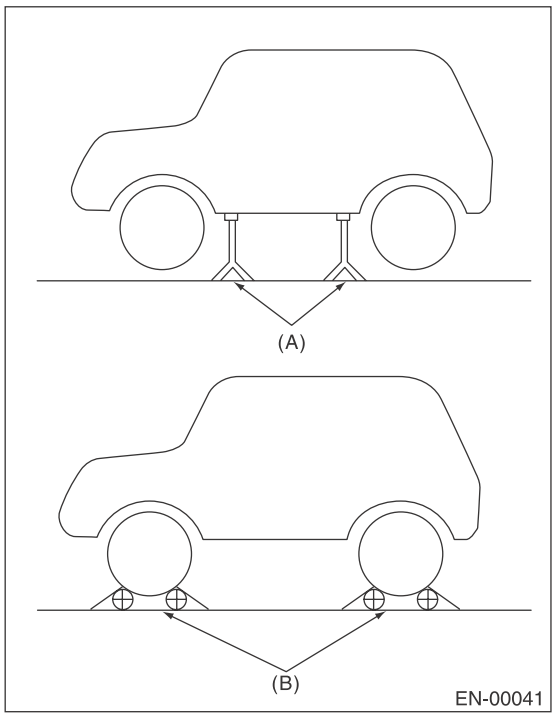

(A) Rigid rack
(B) Free roller

2. SUBARU SELECT MONITOR

1) Check that no DTC remains after clearing memory. <Ref. to EN(H4DOTC)(diag)-55, Clear Memory Mode.>
2) Warm up the engine.
3) Prepare the Subaru Select Monitor kit. <Ref. to EN(H4DOTC)(diag)-8, PREPARATION TOOL, General Description.>

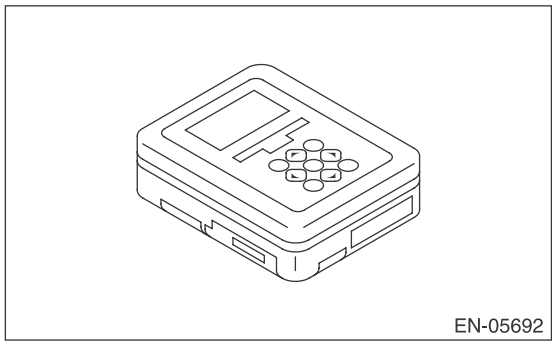

4) Prepare PC with Subaru Select Monitor installed.
5) Connect the USB cable to SDI (Subaru Diagnosis Interface) and USB port on the personal computer (dedicated port for the Subaru Select Monitor).

NOTE:
The dedicated port for the Subaru Select Monitor means the USB port which was used to install the Subaru Select Monitor.

6) Connect the diagnosis cable to SDI.
7) Install the delivery (test) mode fuse (A) of the main fuse box.

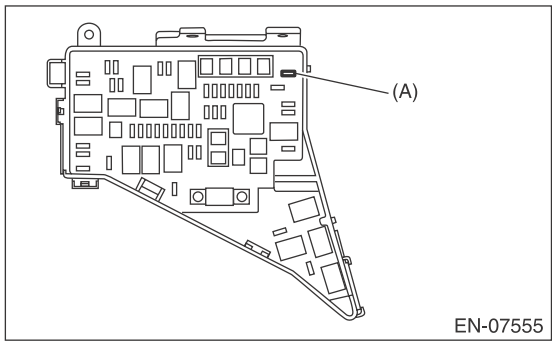

8) Connect SDI to data link connector located in the lower portion of the instrument panel (on the driver's side).

CAUTION:
Do not connect any scan tools except Subaru Select Monitor or general scan tool.

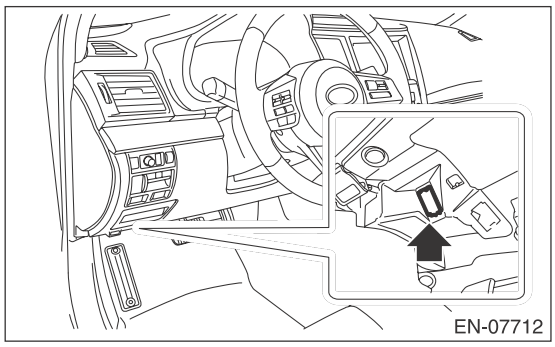

9) Start the PC.
10) Turn the ignition switch to ON (engine OFF) and run the "PC application for Subaru Select Monitor".
11) On «Main Menu» display, select {Each System Check}.
12) On «System Selection Menu» display, select {Engine Control System}.
13) Click the [OK] button after the information of engine type has been displayed.
14) On «Engine Diagnosis» display, select {Dealer Check Mode Procedure}.
15) When the «Perform Inspection (Dealer Check) Mode?» is shown on the screen, click the [Next] button.
16) Perform subsequent procedures as instructed on the display screen.

- If trouble still remains in the memory, the corresponding DTC appears on the display screen.

NOTE:
- For detailed operation procedures, refer to "PC application help for Subaru Select Monitor".
- For details concerning DTC, refer to "List of Diagnostic Trouble Code (DTC)".
  <Ref. to EN(H4DOTC)(diag)-78, List of Diagnostic Trouble Code (DTC).>
- Release the parking brake.
- The speed difference between front and rear wheels may illuminate the ABS warning light, but this does not indicate a malfunction. When engine control system diagnosis is finished, perform the VDC memory clearance procedure of self-diagnosis function. <Ref. to VDC(diag)-25, Clear Memory Mode.>

3. GENERAL SCAN TOOL

1) Check that no DTC remains after clearing memory. <Ref. to EN(H4DOTC)(diag)-34, MODE $04 (CLEAR/RESET EMISSION-RELATED DIAGNOSTIC INFORMATION), OPERATION, General Scan Tool.>
2) Warm up the engine.
3) Install the delivery (test) mode fuse (A) of the main fuse box.

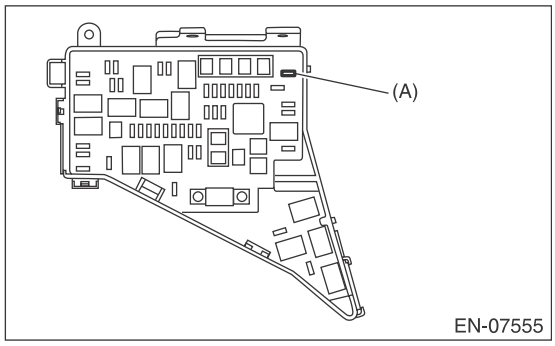

4) Connect the general scan tool to the data link connector located in the lower portion of the instrument panel (on the driver's side).

CAUTION:
Do not connect any scan tools except Subaru Select Monitor or general scan tool.

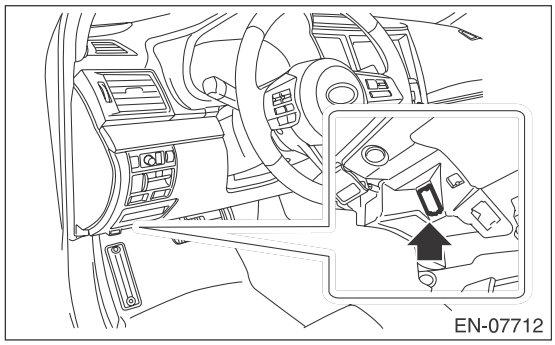

5) Start the engine.

NOTE:
Depress the clutch pedal when starting engine.
6) Turn the neutral position switch to ON by operating shift lever.
7) Keep the engine speed in 2,500 — 3,000 rpm range for 40 seconds.
8) Place the shift lever in 1st gear and drive the vehicle at 5 to 10 km/h (3 to 6 MPH).

NOTE:
• For AWD model, release the parking brake.
• The speed difference between front and rear wheels may illuminate the ABS warning light, but this does not indicate a malfunction. When engine control system diagnosis is finished, perform the VDC memory clearance procedure of self-diagnosis function. <Ref. to VDC(diag)-25, Clear Memory Mode.>

9) Using the general scan tool, check for DTC and record the result(s).

NOTE:
• For detailed operation procedures, refer to the general scan tool operation manual.
• For details concerning DTC, refer to "List of Diagnostic Trouble Code (DTC)".
<Ref. to EN(H4DOTC)(diag)-78, List of Diagnostic Trouble Code (DTC).>

12.Drive Cycle

A: PROCEDURE

It is necessary to perform the drive cycle listed below if DTC is not found in the Inspection Mode. It is possible to complete diagnosis of the DTC by performing the indicated drive cycle. After the repair for the DTC, perform a necessary drive cycle and make sure the function recovers and the DTC is recorded.

1. PREPARATION FOR DRIVE CYCLE

1) Check that the battery voltage is 12 V or more and fuel remains approx. half [20 — 40 ℓ (5.3 — 10.6 US gal, 4.4 — 8.8 Imp gal)].
2) After performing the diagnostics and Clear Memory Mode, check that no DTC remains. <Ref. to EN(H4DOTC)(diag)-55, Clear Memory Mode.>
3) Check the delivery (test) mode fuse is removed.

NOTE:
• Perform the drive cycle after warming up the engine except when the engine coolant temperature at engine start is specified.
• Perform the drive cycle twice if the DTC in the list is marked with *. After completing the first drive cycle, stop the engine and perform second diagnosis in same condition.

2. DRIVE CYCLE A

DTC	Item	Condition
*P0125	Insufficient Coolant Temperature for Closed Loop Fuel Control	Engine coolant temperature at engine start is less than 20°C (68°F).
*P0126	Insufficient Engine Coolant Temperature for Stable Operation	—
*P0128	Coolant Thermostat (Engine Coolant Temperature Below Thermostat Regulating Temperature)	Engine coolant temperature at engine start is less than 55°C (131°F).
*P0133	O2 Sensor Circuit Slow Response (Bank 1 Sensor 1)	—
*P0141	O2 Sensor Heater Circuit (Bank1 Sensor2)	—
*P0171	System Too Lean (Bank 1)	Complete diagnosis with drive cycle B or C as well.
*P0172	System Too Rich (Bank 1)	Complete diagnosis with drive cycle B or C as well.
*P0301	Cylinder 1 Misfire Detected	Complete diagnosis with drive cycle B or C as well.
*P0302	Cylinder 2 Misfire Detected	Complete diagnosis with drive cycle B or C as well.
*P0303	Cylinder 3 Misfire Detected	Complete diagnosis with drive cycle B or C as well.
*P0304	Cylinder 4 Misfire Detected	Complete diagnosis with drive cycle B or C as well.
*P0420	Catalyst System Efficiency Below Threshold (Bank 1)	—
*P0442	Evaporative Emission Control System Leak Detected (Small Leak)	Engine coolant temperature at engine start is less than 25°C (77°F).
*P0451	Evaporative Emission Control System Pressure Sensor	—
*P0456	Evaporative Emission Control System Leak Detected (Very Small Leak)	Engine coolant temperature at engine start is less than 25°C (77°F).
*P0457	Evaporative Emission Control System Leak Detected (Fuel Cap Loose/Off)	Engine coolant temperature at engine start is less than 25°C (77°F).
*P0459	Evaporative Emission System Purge Control Valve Circuit High	—
P1443	Vent Control Solenoid Valve Function Problem	—
*P2096	Post Catalyst Fuel Trim System Too Lean (Bank 1)	Complete diagnosis with drive cycle B or C as well.
*P2097	Post Catalyst Fuel Trim System Too Rich (Bank 1)	Complete diagnosis with drive cycle B or C as well.

Diagnostic procedure:
1) Drive for 20 minutes at a constant speed of 80 km/h (50 MPH).
2) Stop the vehicle and idle for one minute.

3. DRIVE CYCLE B

DTC	Item	Condition
*P0171	System Too Lean (Bank 1)	Complete diagnosis with drive cycle A or C as well.
*P0172	System Too Rich (Bank 1)	Complete diagnosis with drive cycle A or C as well.
*P0301	Cylinder 1 Misfire Detected	Complete diagnosis with drive cycle A or C as well.
*P0302	Cylinder 2 Misfire Detected	Complete diagnosis with drive cycle A or C as well.
*P0303	Cylinder 3 Misfire Detected	Complete diagnosis with drive cycle A or C as well.
*P0304	Cylinder 4 Misfire Detected	Complete diagnosis with drive cycle A or C as well.
*P0464	Fuel Level Sensor Circuit Intermittent	—
*P0506	Idle Air Control System RPM Lower Than Expected	—
*P0507	Idle Air Control System RPM Higher Than Expected	—
*P2096	Post Catalyst Fuel Trim System Too Lean (Bank 1)	Complete diagnosis with drive cycle A or C as well.
*P2097	Post Catalyst Fuel Trim System Too Rich (Bank 1)	Complete diagnosis with drive cycle A or C as well.

Diagnostic procedure:
1) Drive at 10 km/h (6 MPH) or more.
2) Stop the vehicle and idle for ten minutes.

4. DRIVE CYCLE C

DTC	Item	Condition
*P0030	HO2S Heater Control Circuit (Bank 1 Sensor 1)	—
*P0068	MAP/MAF - Throttle Position Correlation	—
*P0101	Mass or Volume Air Flow Circuit Range/Performance	—
P0134	O2 Sensor Circuit No Activity Detected (Bank 1 Sensor 1)	—
*P0139	O2 Sensor Circuit Slow Response (Bank 1 Sensor 2)	—
*P0171	System Too Lean (Bank 1)	Complete diagnosis with drive cycle A or B as well.
*P0172	System Too Rich (Bank 1)	Complete diagnosis with drive cycle A or B as well.
P0244	Turbo/Super Charger Wastegate Solenoid “A” Range/Performance	—
P0246	Turbo/Super Charger Wastegate Solenoid “A” High	—
*P0301	Cylinder 1 Misfire Detected	Complete diagnosis with drive cycle A or B as well.
*P0302	Cylinder 2 Misfire Detected	Complete diagnosis with drive cycle A or B as well.
*P0303	Cylinder 3 Misfire Detected	Complete diagnosis with drive cycle A or B as well.
*P0304	Cylinder 4 Misfire Detected	Complete diagnosis with drive cycle A or B as well.
P2004	Intake Manifold Runner Control Stuck Open (Bank 1)	—
P2005	Intake Manifold Runner Control Stuck Open (Bank 2)	—
*P2096	Post Catalyst Fuel Trim System Too Lean (Bank 1)	Complete diagnosis with drive cycle A or B as well.
*P2097	Post Catalyst Fuel Trim System Too Rich (Bank 1)	Complete diagnosis with drive cycle A or B as well.

Diagnostic procedure:
Drive according to the drive pattern described below.

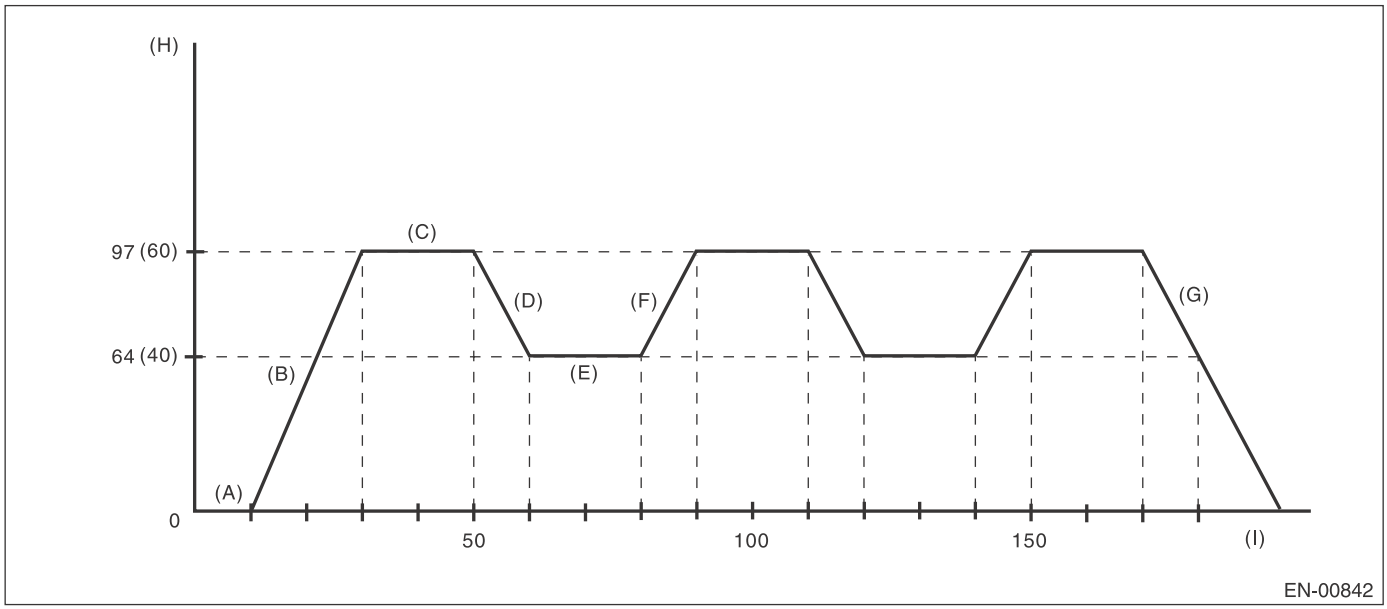

(A)	Idle the engine for 10 seconds or more.	(D)	Decelerate the vehicle to 64 km/h (40 MPH) with throttle fully closed.	(G)	Stop the vehicle with throttle fully closed.
(B)	Accelerate the vehicle to 97 km/h (60 MPH) within 20 seconds.	(E)	Drive the vehicle at 64 km/h (40 MPH) for 20 seconds.	(H)	Vehicle speed km/h (MPH)
(C)	Drive the vehicle at 97 km/h (60 MPH) for 20 seconds.	(F)	Accelerate the vehicle to 97 km/h (60 MPH) within 10 seconds.	(I)	Sec.

5. DRIVE CYCLE D

DTC	Item	Condition
*P0181	Fuel Temperature Sensor “A” Circuit Range/Performance	—

NOTE:
In drive cycle D, one drive cycle will be established when both the drift diagnosis and stuck diagnosis have completed.
Diagnostic procedure:

DRIFT DIAGNOSIS

1) Make sure of the items below before starting the engine.
- Engine coolant temperature is less than 30°C (86°F).
- Remaining fuel is 10 ℓ (2.6 US gal, 2.2 Imp gal) or more.
- Battery voltage is 10.9 V or more.

2) Idle the engine until engine coolant temperature is at least 10°C (18°F) higher than it was when engine started.
3) After the engine has reached the state of procedure 2), idle the engine for another 5 minutes or more.

STUCK DIAGNOSIS

1) Make sure that the battery voltage is 10.9 V or more.
2) Perform the Clear Memory Mode. <Ref. to EN(H4DOTC)(diag)-55, Clear Memory Mode.>
3) Drive the vehicle for the distance equal to the fuel of 50 ℓ (13.2 US gal, 11 Imp gal).

NOTE:
- It is acceptable to drive the vehicle intermittently.
- Do not disconnect the battery terminals during stuck diagnosis. (Data will be cleared by disconnecting the battery terminals.)

6. DRIVE CYCLE E

DTC	Item	Condition
*P0461	Fuel Level Sensor “A” Circuit Range/Performance	—

Diagnostic procedure:
1) Make sure that the battery voltage is 10.9 V or more.
2) Perform the Clear Memory Mode. <Ref. to EN(H4DOTC)(diag)-55, Clear Memory Mode.>
3) Drive the vehicle for the distance equal to the fuel of 30 ℓ (7.9 US gal, 6.6 Imp gal).

NOTE:
• It is acceptable to drive the vehicle intermittently.
• Do not disconnect the battery terminals while diagnosing. (Data will be cleared by disconnecting the battery terminals.)

7. DRIVE CYCLE F

DTC	Item	Condition
*P0111	Intake Air Temperature Sensor 1 Circuit Range/Performance	—

Diagnostic procedure:
1) Make sure that the engine coolant temperature is less than 30°C (86°F).
2) Drive according to the drive pattern described below.

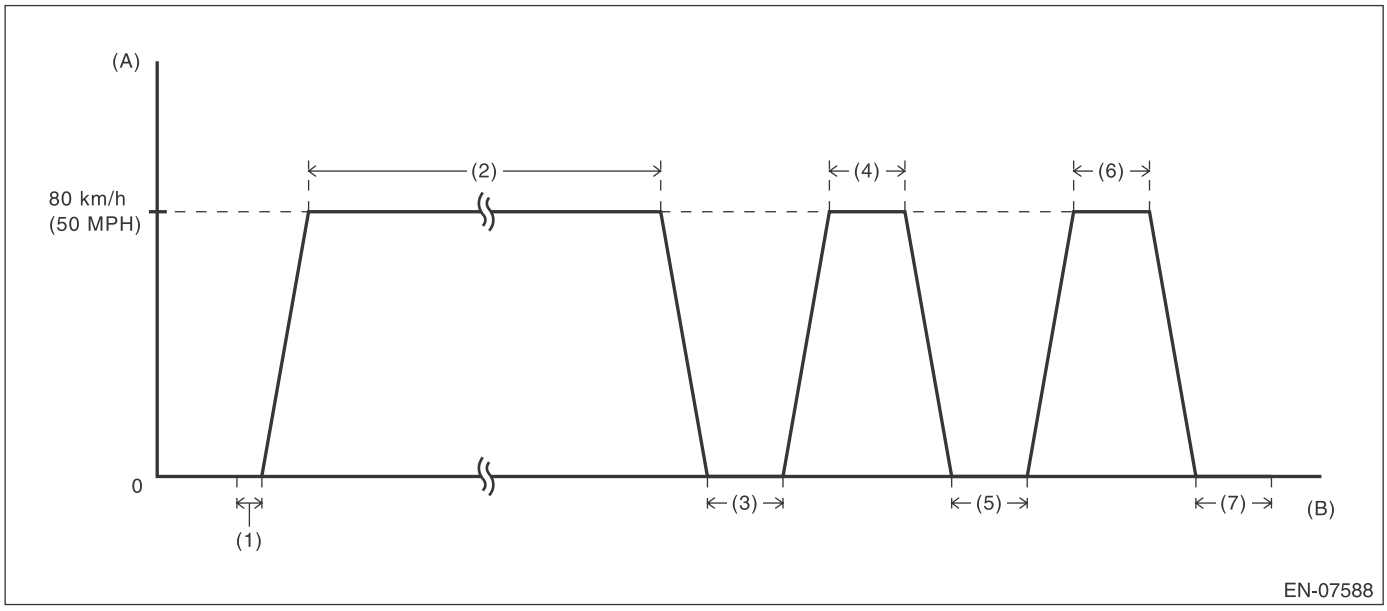

(A) Vehicle speed
(B) Elapsed time
(1) Idle the engine for 10 seconds after engine start.
(2) Drive for 8 minutes at a constant speed of 80 km/h (50 MPH).
(3) Stop the vehicle and idle for 30 seconds.
(4) Drive for 30 seconds at a constant speed of 80 km/h (50 MPH).
(5) Stop the vehicle and idle for 30 seconds.
(6) Drive for 30 seconds at a constant speed of 80 km/h (50 MPH).
(7) Stop the vehicle and idle for 30 seconds.

NOTE:
• There is no given transition time between idling and cruising.
• Driving at constant speed only on a downhill causes smaller engine load and may result in failure to obtain a right diagnostic result.
• When the engine stops while performing drive cycle F, perform it again from the state of procedure 1).

8. DRIVE CYCLE H

DTC	Item	Condition
*P1602	Control Module Programming Error	—

Diagnostic procedure:
1) Perform the Clear Memory Mode. <Ref. to EN(H4DOTC)(diag)-55, Clear Memory Mode.>
2) With the ignition switch ON (engine OFF), read the engine coolant temperature, intake air temperature and fuel temperature. <Ref. to EN(H4DOTC)(diag)-37, READ CURRENT DATA FOR ENGINE (NORMAL MODE), OPERATION, Subaru Select Monitor.>
3) If the values from step 2) satisfy the following two conditions, idle the engine for one minute.

Condition:
| Engine coolant temperature — Intake air temperature | ≤ 5°C (41°F)
| Engine coolant temperature — Fuel temperature | ≤ 2°C (36°F)

NOTE:
- If the conditions are not satisfied, turn the ignition switch to OFF and wait until the parameters are satisfied.
- Do not move the shift lever from neutral position during idling.

13.Clear Memory Mode

A: OPERATION

1. SUBARU SELECT MONITOR

NOTE:
• Initial diagnosis of electronic throttle control is performed after memory clearance. Wait for 10 seconds or more after turning the ignition switch to ON, and then start the engine.
• For detailed operation procedures, refer to “PC application help for Subaru Select Monitor”.

2. GENERAL SCAN TOOL

For procedures clearing memory using the general scan tool, refer to the general scan tool operation manual.

NOTE:
Initial diagnosis of electronic throttle control is performed after memory clearance. For this reason, start the engine after 10 seconds or more have elapsed since the ignition switch was turned to ON.

14. System Operation Check Mode

A: OPERATION

CAUTION:
After executing the system operation check mode, execute the Clear Memory Mode. <Ref. to EN(H4DOTC)(diag)-55, OPERATION, Clear Memory Mode.>

NOTE:
For detailed operation procedures, refer to “PC application help for Subaru Select Monitor”.

15.Malfunction Indicator Light

A: PROCEDURE

1. Activation of malfunction indicator light. <Ref. to EN(H4DOTC)(diag)-58, ACTIVATION OF MALFUNCTION INDICATOR LIGHT, Malfunction Indicator Light.>
↓
2. Malfunction indicator light does not come on. <Ref. to EN(H4DOTC)(diag)-60, MALFUNCTION INDICATOR LIGHT DOES NOT COME ON, Malfunction Indicator Light.>
↓
3. Malfunction indicator light does not go off. <Ref. to EN(H4DOTC)(diag)-62, MALFUNCTION INDICATOR LIGHT DOES NOT GO OFF, Malfunction Indicator Light.>
↓
4. Malfunction indicator light does not blink. <Ref. to EN(H4DOTC)(diag)-63, MALFUNCTION INDICATOR LIGHT DOES NOT BLINK, Malfunction Indicator Light.>
↓
5. Malfunction indicator light remains blinking. <Ref. to EN(H4DOTC)(diag)-65, MALFUNCTION INDICATOR LIGHT REMAINS BLINKING, Malfunction Indicator Light.>

B: ACTIVATION OF MALFUNCTION INDICATOR LIGHT

1) When the ignition switch is turned to ON (engine OFF), the malfunction indicator light (A) in the combination meter illuminates.

NOTE:
If the malfunction indicator light does not illuminate, perform diagnostics of the malfunction indicator light circuit or the combination meter circuit. <Ref. to EN(H4DOTC)(diag)-60, MALFUNCTION INDICATOR LIGHT DOES NOT COME ON, Malfunction Indicator Light.>

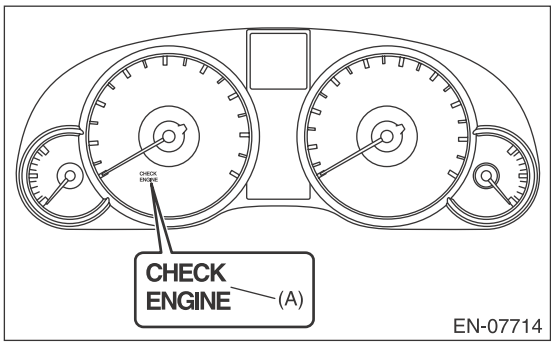

2) After starting the engine, the malfunction indicator light goes out. If it does not go off, any of the engine and emission control system has malfunction.

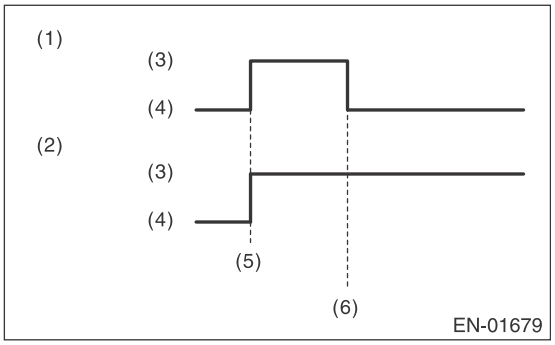

(1) No DTC
(2) Trouble occurs
(3) ON
(4) OFF
(5) Ignition switch ON
(6) Engine start

3) If the diagnostic system detects a misfire which could damage the catalyst, the malfunction indicator light will blink at a cycle of 1 Hz.

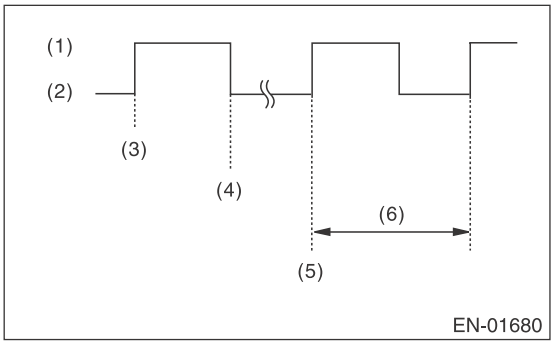

(1) ON
(2) OFF
(3) Ignition switch ON
(4) Engine start
(5) Misfire start
(6) 1 second

4) Install the delivery (test) mode fuse (A) of main fuse box with ignition switch to OFF.

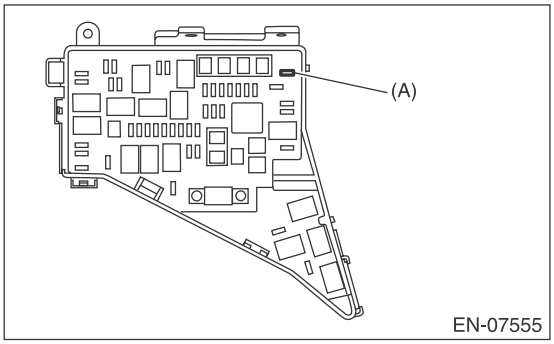

(1) When the ignition switch is turned to ON (engine OFF), the malfunction indicator light illuminates.
(2) After the engine starts, malfunction indicator light blinks in a cycle of 0.5 Hz. (During diagnosis)

(3) Malfunction indicator light blinks at a cycle of 3 Hz after diagnosis if there is no trouble. Malfunction indicator light illuminates if faulty.

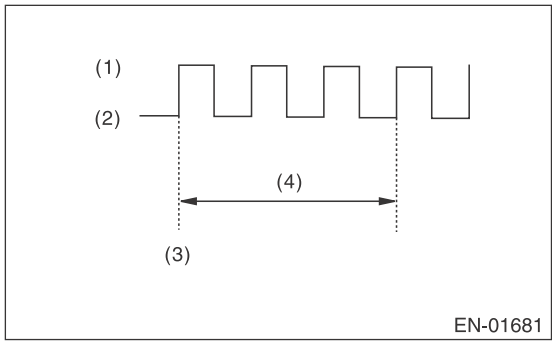

(1) ON
(2) OFF
(3) Ignition switch ON
(4) 1 second

C: MALFUNCTION INDICATOR LIGHT DOES NOT COME ON

DIAGNOSIS:
The malfunction indicator light circuit is open or shorted.
TROUBLE SYMPTOM:
When the ignition switch is turned to ON (engine OFF), malfunction indicator light does not illuminate.
WIRING DIAGRAM:

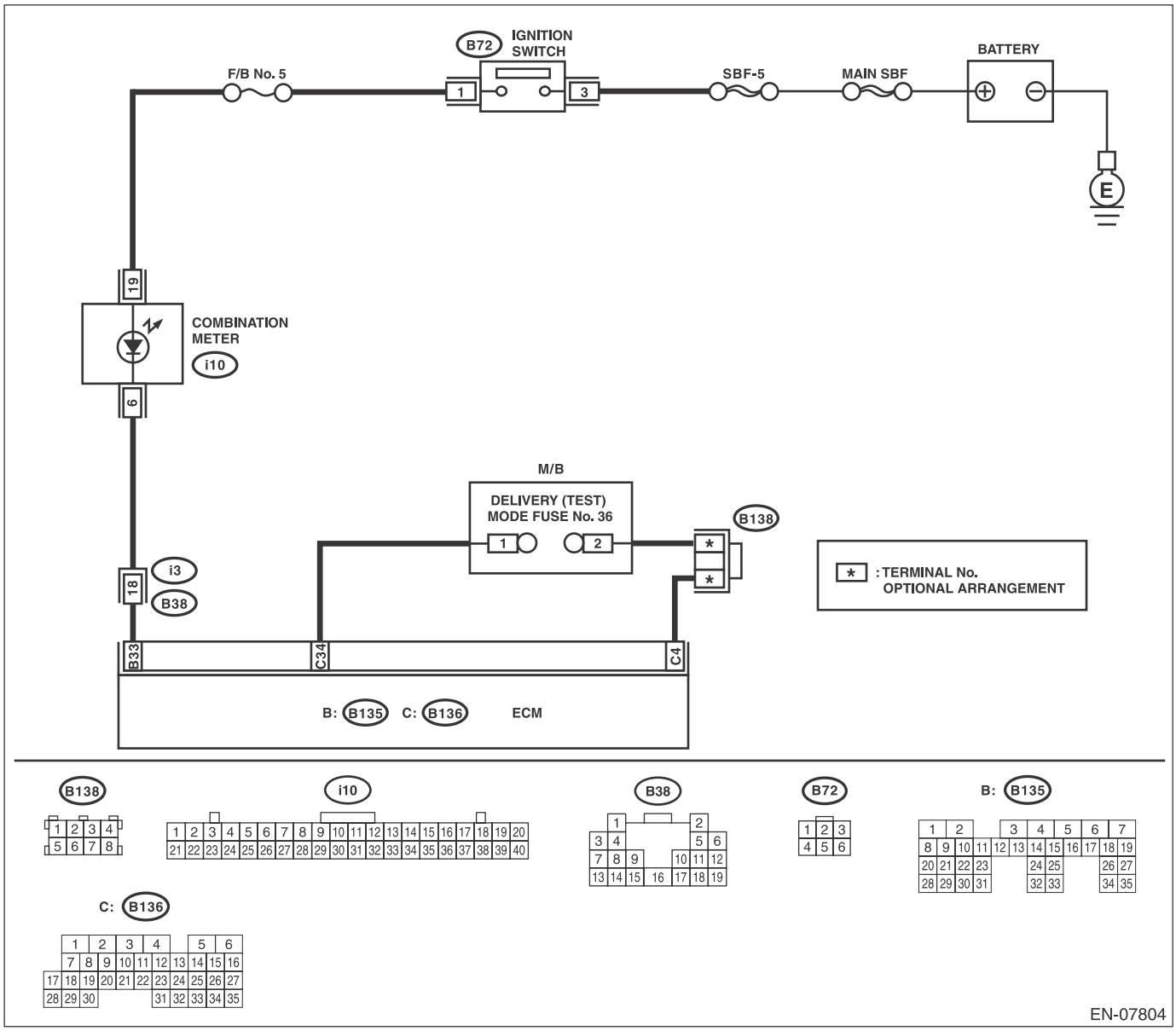

Step		Check	Yes	No
1	**CHECK OUTPUT SIGNAL OF ECM.** 1) Turn the ignition switch to ON. 2) Measure the voltage between ECM and chassis ground. ***Connector & terminal*** ***(B135) No. 33 (+) — Chassis ground (–):***	Is the voltage 10 V or more?	Go to step **5**.	Go to step **2**.

	Step	Check	Yes	No
2	**CHECK HARNESS BETWEEN ECM AND COMBINATION METER CONNECTOR.** 1) Turn the ignition switch to OFF. 2) Remove the combination meter. <Ref. to IDI-20, Combination Meter.> 3) Disconnect the connectors from ECM and combination meter. 4) Measure the resistance of harness between ECM and combination meter connector. ***Connector & terminal*** ***(B135) No. 33 — (i10) No. 6:***	Is the resistance less than 1 Ω?	Go to step **3**.	Repair the harness and connector. NOTE: In this case, repair the following item: • Open circuit in harness between ECM and combination meter connector • Poor contact of coupling connector
3	**CHECK FOR POOR CONTACT.** Check for poor contact of combination meter connector.	Is there poor contact of combination meter connector?	Repair the poor contact of combination meter connector.	Go to step **4**.
4	**CHECK HARNESS BETWEEN COMBINATION METER AND IGNITION SWITCH CONNECTOR.** 1) Turn the ignition switch to ON. 2) Measure the voltage between combination meter connector and chassis ground. ***Connector & terminal*** ***(i10) No. 19 (+) — Chassis ground (–):***	Is the voltage 10 V or more?	Replace the meter case assembly of combination meter. <Ref. to IDI-20, Combination Meter.>	Check the following item and repair if necessary. NOTE: • Blown-out of fuse (F/B No. 5) • Open circuit or short circuit to ground in harness of power supply circuit
5	**CHECK FOR POOR CONTACT.** Check for poor connection by shaking or pulling ECM connector and harness.	Does the malfunction indicator light illuminate?	Repair the poor contact of ECM connector.	Go to step **6**.
6	**CHECK ECM CONNECTOR.** Check the connection of ECM connector.	Is the ECM connector correctly connected?	Replace the ECM. <Ref. to FU(H4DOTC)-57, Engine Control Module (ECM).>	Repair the connection of ECM connector.

D: MALFUNCTION INDICATOR LIGHT DOES NOT GO OFF

DIAGNOSIS:
The malfunction indicator light circuit is shorted.

TROUBLE SYMPTOM:
Although malfunction indicator light comes on when the engine runs, DTC is not shown on the Subaru Select Monitor or general scan tool display.

WIRING DIAGRAM:

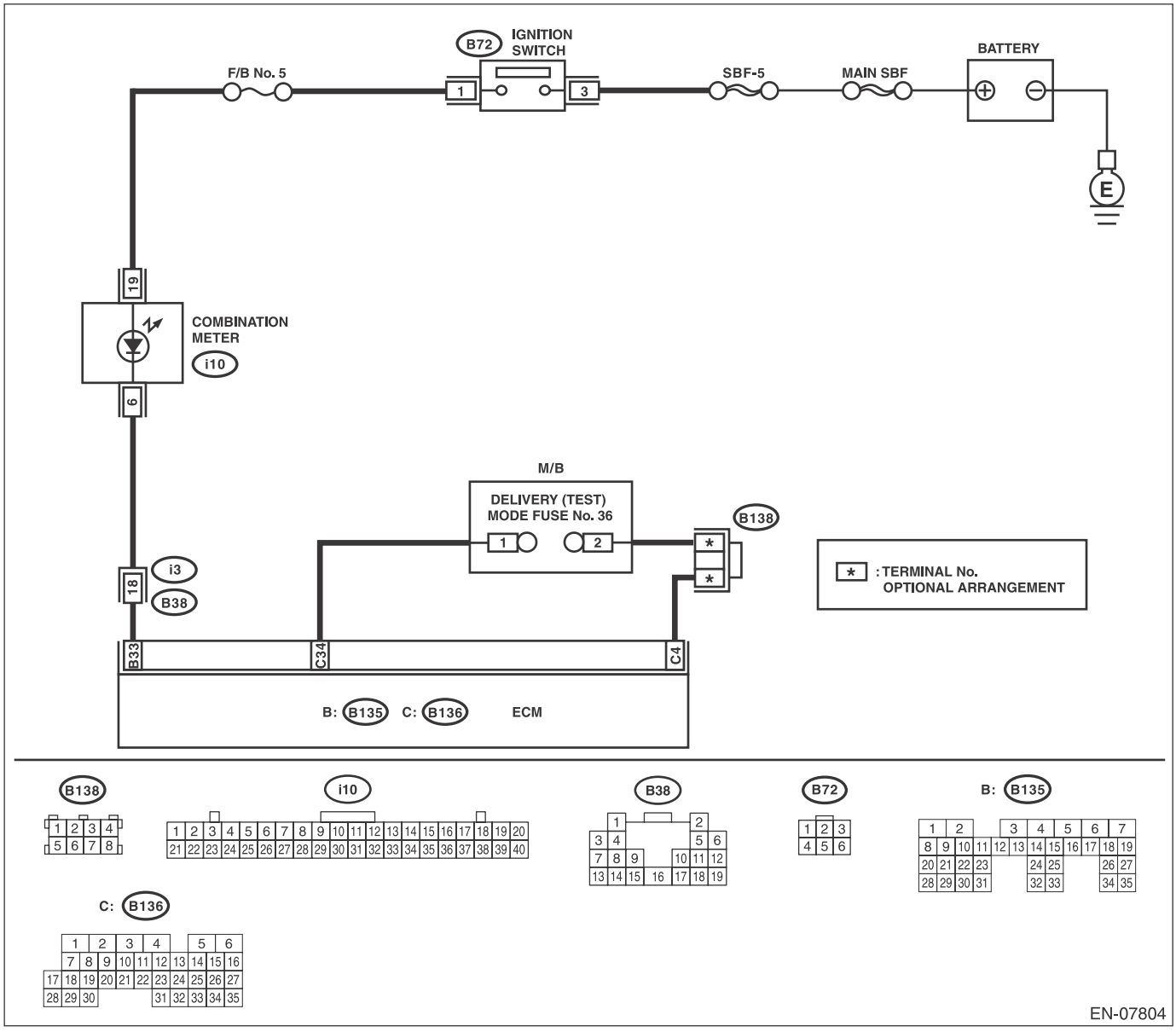

Step		Check	Yes	No
1	**CHECK HARNESS BETWEEN ECM AND COMBINATION METER CONNECTOR.** 1) Turn the ignition switch to OFF. 2) Disconnect the connector from ECM. 3) Turn the ignition switch to ON.	Does the malfunction indicator light illuminate?	Repair the ground short circuit of harness between ECM and combination meter connector.	Replace the ECM. <Ref. to FU(H4DOTC)-57, Engine Control Module (ECM).>

E: MALFUNCTION INDICATOR LIGHT DOES NOT BLINK

DIAGNOSIS:

- The malfunction indicator light circuit is open or shorted.
- The delivery (test) mode fuse circuit is open.

TROUBLE SYMPTOM:

Malfunction indicator light does not blink during Inspection Mode.

WIRING DIAGRAM:

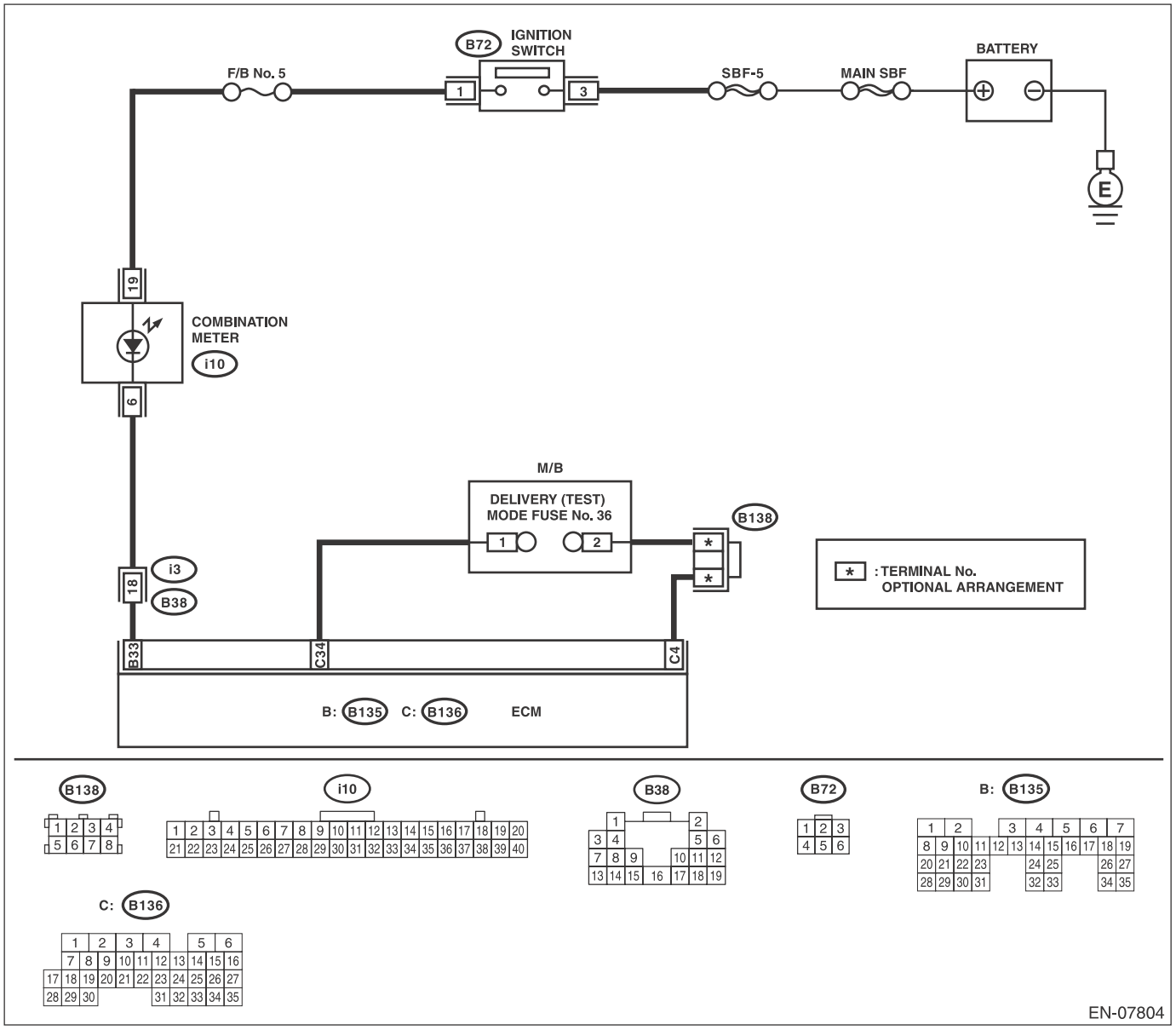

	Step	Check	Yes	No
1	**CHECK STATUS OF MALFUNCTION INDICATOR LIGHT.** 1) Turn the ignition switch to OFF. 2) Check the delivery (test) mode fuse is removed. 3) Turn the ignition switch to ON. (engine OFF)	Does the malfunction indicator light illuminate?	Go to step **2**.	Repair the malfunction indicator light circuit. <Ref. to EN(H4DOTC)(diag)-60, MALFUNCTION INDICATOR LIGHT DOES NOT COME ON, Malfunction Indicator Light.>
2	**CHECK HARNESS BETWEEN ECM AND COMBINATION METER CONNECTOR.** 1) Turn the ignition switch to OFF. 2) Disconnect the connector from ECM. 3) Turn the ignition switch to ON.	Does the malfunction indicator light illuminate?	Repair the ground short circuit of harness between ECM and combination meter connector.	Go to step **3**.
3	**CHECK HARNESS BETWEEN ECM AND DELIVERY (TEST) MODE FUSE.** 1) Turn the ignition switch to OFF. 2) Install the delivery (test) mode fuse of the main fuse box. 3) Measure the resistance of harness between ECM connectors. ***Connector & terminal*** ***(B136) No. 4 — (B136) No. 34:***	Is the resistance less than 1 Ω?	Go to step **4**.	Repair the harness and connector. NOTE: In this case, repair the following item: • Open circuit of harness between ECM and delivery (test) mode fuse • Poor contact of joint connector
4	**CHECK FOR POOR CONTACT.** Check for poor contact of ECM connector.	Is there poor contact of ECM connector?	Repair the poor contact of ECM connector.	Replace the ECM. <Ref. to FU(H4DOTC)-57, Engine Control Module (ECM).>

F: MALFUNCTION INDICATOR LIGHT REMAINS BLINKING

DIAGNOSIS:
The delivery (test) mode fuse circuit is shorted.
TROUBLE SYMPTOM:
Malfunction indicator light blinks when delivery (test) mode fuse is not connected.
WIRING DIAGRAM:

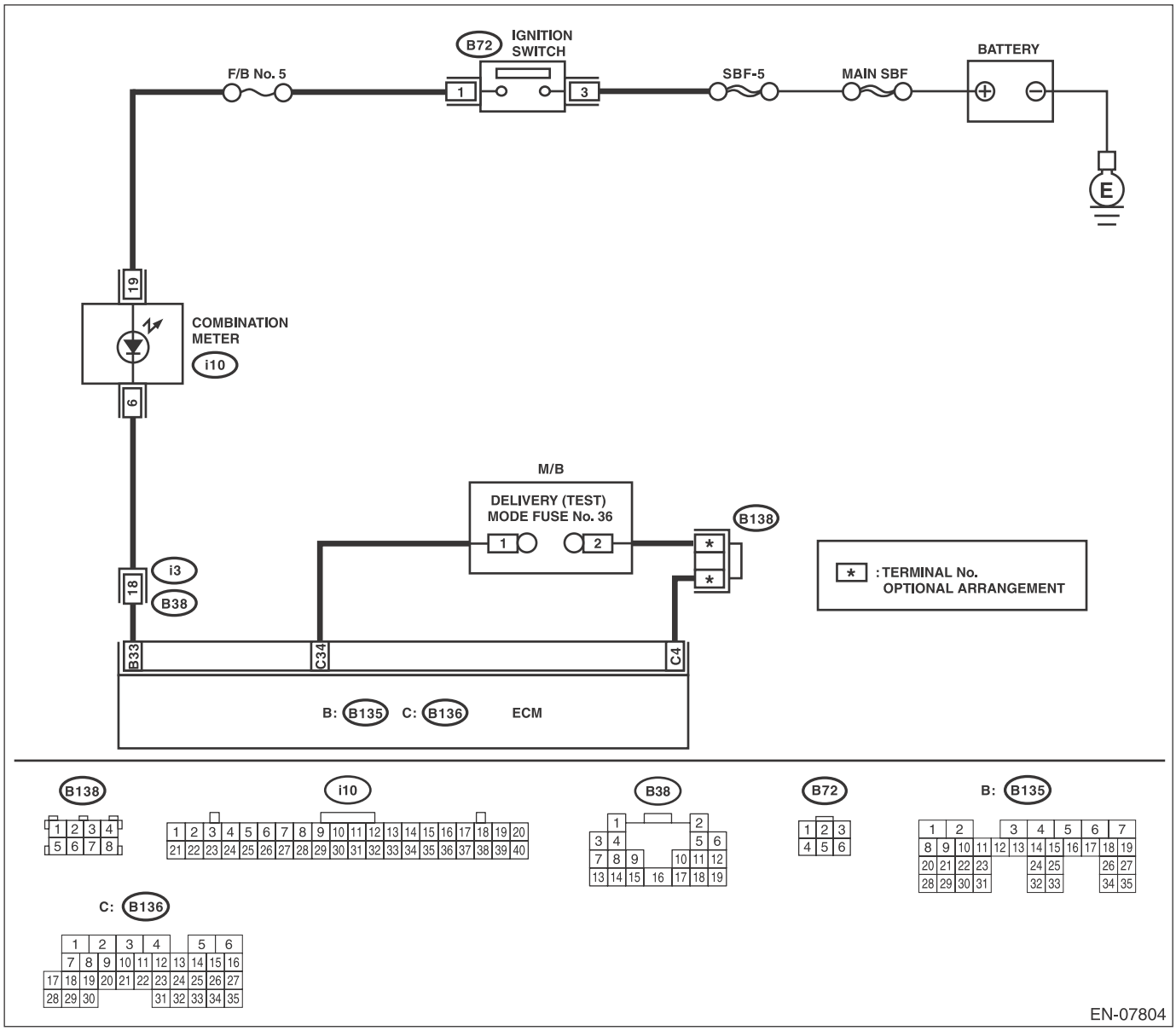

Step		Check	Yes	No
1	**CHECK DELIVERY (TEST) MODE FUSE.** 1) Check the delivery (test) mode fuse is removed. 2) Turn the ignition switch to ON.	Does the malfunction indicator light blink?	Go to step **2**.	System is normal. NOTE: Malfunction indicator light blinks when delivery (test) mode fuse is connected.

	Step	Check	Yes	No
2	**CHECK HARNESS BETWEEN ECM AND CHASSIS GROUND TERMINAL.** 1) Turn the ignition switch to OFF. 2) Disconnect the connector from ECM. 3) Measure the resistance of harness between ECM and chassis ground. ***Connector & terminal*** ***(B136) No. 34 — Chassis ground:***	Is the resistance less than 5 Ω?	Repair the short circuit to ground in harness between ECM and delivery (test) mode fuse.	Replace the ECM. <Ref. to FU(H4DOTC)-57, Engine Control Module (ECM).>

16.Diagnostics for Engine Starting Failure

A: PROCEDURE

1. Check of the fuel amount
↓
2. Inspection of starter motor circuit. <Ref. to EN(H4DOTC)(diag)-68, STARTER MOTOR CIRCUIT, Diagnostics for Engine Starting Failure.>
↓
3. Inspection of ECM power supply and ground line. <Ref. to EN(H4DOTC)(diag)-71, CHECK POWER SUPPLY AND GROUND LINE OF ENGINE CONTROL MODULE (ECM), Diagnostics for Engine Starting Failure.>
↓
4. Inspection of ignition control system. <Ref. to EN(H4DOTC)(diag)-73, IGNITION CONTROL SYSTEM, Diagnostics for Engine Starting Failure.>
↓
5. Inspection of fuel pump circuit. <Ref. to EN(H4DOTC)(diag)-75, FUEL PUMP CIRCUIT, Diagnostics for Engine Starting Failure.>
↓
6. Inspection of fuel injector circuit. <Ref. to EN(H4DOTC)(diag)-76, FUEL INJECTOR CIRCUIT, Diagnostics for Engine Starting Failure.>

B: STARTER MOTOR CIRCUIT

CAUTION:
After servicing or replacing faulty parts, perform Clear Memory Mode <Ref. to EN(H4DOTC)(diag)-55, OPERATION, Clear Memory Mode.>, and Inspection Mode <Ref. to EN(H4DOTC)(diag)-44, PROCEDURE, Inspection Mode.>.
WIRING DIAGRAM:

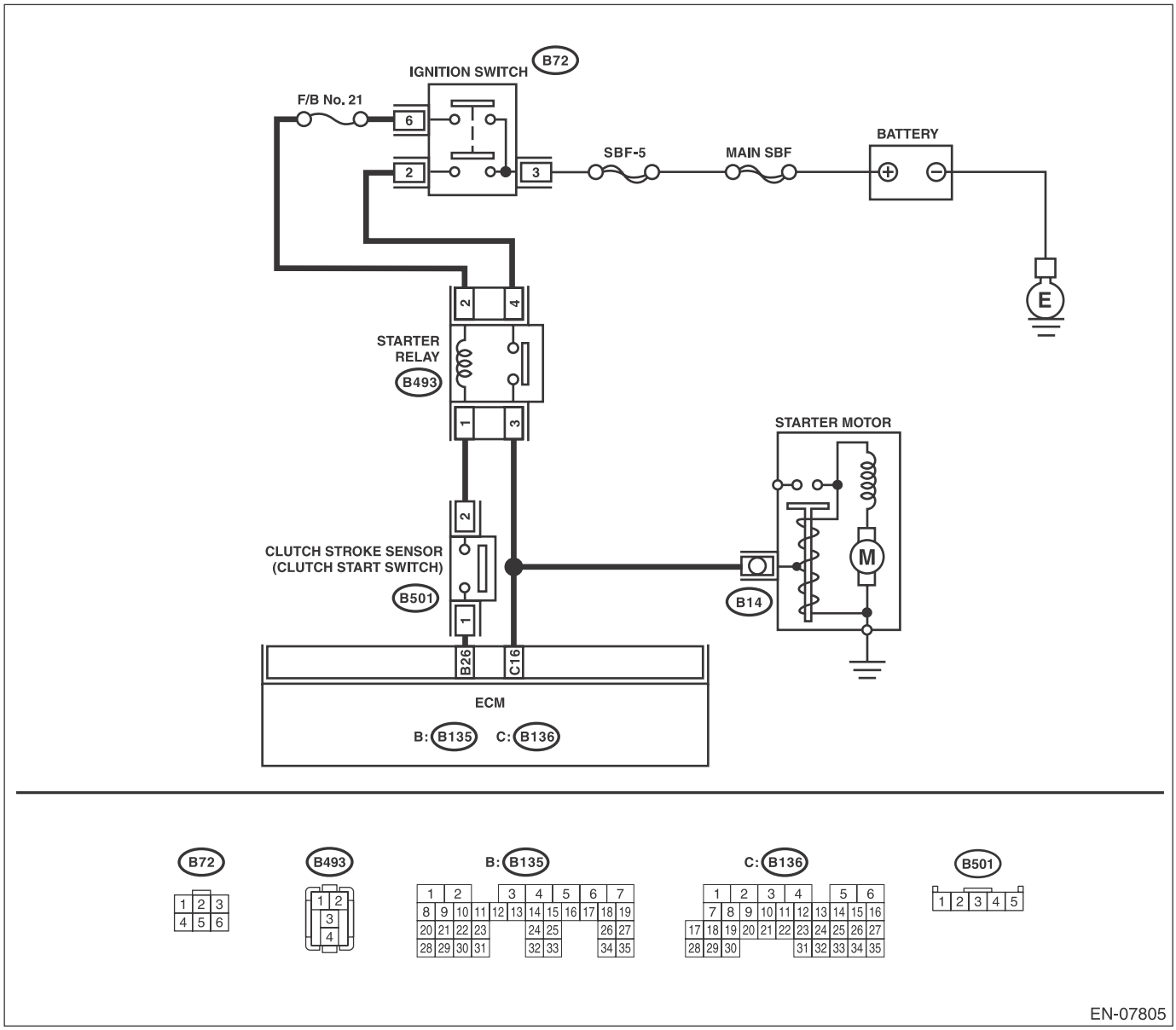

Step		Check	Yes	No
1	**CHECK BATTERY.** Check the battery voltage.	Is the voltage 12 V or more?	Go to step **2**.	Charge or replace the battery.
2	**CHECK OPERATION OF STARTER MOTOR.**	Does the starter motor operate?	Go to step **3**.	Go to step **4**.

Step		Check	Yes	No
3	**CHECK DTC.**	Is DTC displayed? <Ref. to EN(H4DOTC)(diag)-43, OPERATION, Read Diagnostic Trouble Code (DTC).>	Check the appropriate DTC using the "List of Diagnostic Trouble Code (DTC)". <Ref. to EN(H4DOTC)(diag)-78, List of Diagnostic Trouble Code (DTC).>	The circuit has returned to a normal condition at this time. Reproduce the failure, and then perform the diagnosis again. NOTE: In this case, temporary poor contact of connector, temporary open or short circuit of harness may be the cause.
4	**CHECK INPUT SIGNAL FOR STARTER MOTOR.** 1) Turn the ignition switch to OFF. 2) Disconnect the connector from starter motor. 3) Depress the clutch pedal. 4) Turn the ignition switch to START. 5) Measure the voltage between the starter motor connector and the engine ground. ***Connector & terminal*** ***(B14) No. 1 (+) — Engine ground (–):***	Is the voltage 10 V or more?	Check the starter motor. <Ref. to SC(H4SO)-9, Starter.>	Go to step **5**.
5	**CHECK INPUT SIGNAL FOR STARTER MOTOR.** 1) Depress the clutch pedal. 2) Turn the ignition switch to START. 3) Measure the voltage between starter relay connector and chassis ground. ***Connector & terminal*** ***(B493) No. 3 (+) — Chassis ground (–):***	Is the voltage 10 V or more?	Repair the open circuit of the harness between starter relay connector and starter motor.	Go to step **6**.
6	**CHECK HARNESS BETWEEN BATTERY AND IGNITION SWITCH CONNECTOR.** 1) Turn the ignition switch to OFF. 2) Disconnect the connector from ignition switch. 3) Measure the voltage between ignition switch connector and chassis ground. ***Connector & terminal*** ***(B72) No. 3 (+) — Chassis ground (–):***	Is the voltage 10 V or more?	Go to step **7**.	Repair the power supply circuit.
7	**CHECK IGNITION SWITCH.** Measure the resistance between ignition switch terminals after turning the ignition switch to START position. ***Terminals*** ***No. 2 — No. 3:*** ***No. 6 — No. 3:***	Is the resistance less than 1 Ω?	Go to step **8**.	Replace the ignition switch. <Ref. to SL-59, REPLACEMENT, Ignition Key Lock.>

	Step	Check	Yes	No
8	**CHECK INPUT VOLTAGE OF STARTER RELAY.** 1) Remove the starter relay. 2) Connect the connector to ignition switch. 3) Turn the ignition switch to START. 4) Measure the voltage between starter relay connector and chassis ground. ***Connector & terminal*** ***(B493) No. 4 (+) — Chassis ground (–):*** ***(B493) No. 2 (+) — Chassis ground (–):***	Is the voltage 10 V or more?	Go to step **9**.	Check the following item and repair if necessary. • Blown-out of fuse (F/B No. 21) • Open or short circuit to ground in harness between starter relay connector and ignition switch connector
9	**CHECK STARTER RELAY.** 1) Connect the battery to starter relay terminals No. 2 and No. 1. 2) Measure the resistance between starter relay terminals. ***Terminals*** ***No. 4 — No. 3:***	Is the resistance less than 1 Ω?	Go to step **10**.	Replace the starter relay.
10	**CHECK HARNESS BETWEEN ECM AND STARTER RELAY CONNECTOR.** 1) Turn the ignition switch to OFF. 2) Disconnect the connector from ECM. 3) Measure the resistance of harness between ECM and starter relay connector. ***Connector & terminal*** ***(B136) No. 16 — (B493) No. 3:***	Is the resistance less than 1 Ω?	Go to step **11**.	Repair the open circuit of harness between ECM and starter relay connector.
11	**CHECK ECM INPUT VOLTAGE.** 1) Install the starter relay. 2) Depress the clutch pedal. 3) Turn the ignition switch to START. 4) Measure the voltage between ECM connector and chassis ground. ***Connector & terminal*** ***(B135) No. 26 (+) — Chassis ground (–):***	Is the voltage 10 V or more?	Check the ECM power supply and ground line. <Ref. to EN(H4DOTC)(diag)-71, CHECK POWER SUPPLY AND GROUND LINE OF ENGINE CONTROL MODULE (ECM), Diagnostics for Engine Starting Failure.>	Go to step **12**.
12	**CHECK HARNESS BETWEEN ECM AND CLUTCH START SWITCH CONNECTOR.** 1) Turn the ignition switch to OFF. 2) Disconnect the clutch start switch connector. 3) Measure the resistance of harness between ECM and clutch start switch connector. ***Connector & terminal*** ***(B135) No. 26 — (B501) No. 1:***	Is the resistance less than 1 Ω?	Go to step **13**.	Repair the open circuit of harness between ECM and clutch start switch connector.
13	**CHECK INPUT VOLTAGE OF CLUTCH START SWITCH.** 1) Turn the ignition switch to START. 2) Measure the voltage between the clutch start switch connector and chassis ground. ***Connector & terminal*** ***(B501) No. 2 (+) — Chassis ground (–):***	Is the voltage 10 V or more?	Replace the clutch start switch. <Ref. to CL-31, Clutch Switch.>	Repair open or short circuit to ground in harness between starter relay and clutch start switch connector.

C: CHECK POWER SUPPLY AND GROUND LINE OF ENGINE CONTROL MODULE (ECM)

CAUTION:
After servicing or replacing faulty parts, perform Clear Memory Mode <Ref. to EN(H4DOTC)(diag)-55, OPERATION, Clear Memory Mode.>, and Inspection Mode <Ref. to EN(H4DOTC)(diag)-44, PROCEDURE, Inspection Mode.>.
WIRING DIAGRAM:

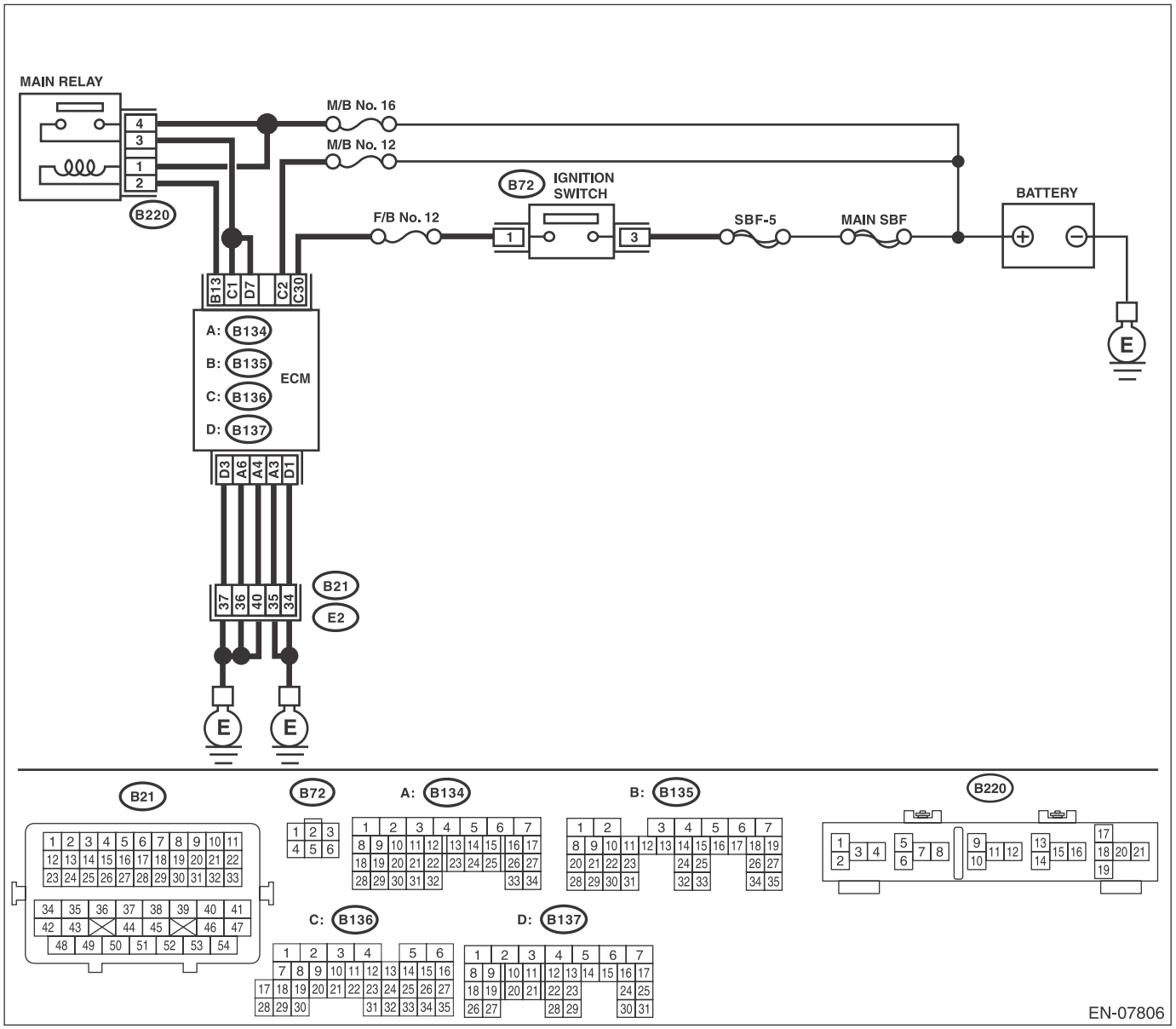

Step		Check	Yes	No
1	**CHECK MAIN RELAY.** 1) Turn the ignition switch to OFF. 2) Remove the main relay. 3) Connect the battery to main relay terminals No. 1 and No. 2. 4) Measure the resistance between main relay terminals. ***Terminals*** ***No. 3 — No. 4:***	Is the resistance less than 1 Ω?	Go to step **2**.	Replace the main relay. <Ref. to EN(H4DOTC)(diag)-9, Electrical Component Location.>

	Step	Check	Yes	No
2	**CHECK GROUND CIRCUIT FOR ECM.** 1) Disconnect the connector from ECM. 2) Measure the resistance of harness between ECM and chassis ground. ***Connector & terminal*** ***(B134) No. 3 — Chassis ground:*** ***(B134) No. 4 — Chassis ground:*** ***(B134) No. 6 — Chassis ground:*** ***(B137) No. 1 — Chassis ground:*** ***(B137) No. 3 — Chassis ground:***	Is the resistance less than 5 Ω?	Go to step **3**.	Repair the harness and connector. NOTE: In this case, repair the following item: • Open circuit in harness between ECM and engine ground terminal • Poor contact of coupling connector
3	**CHECK INPUT VOLTAGE OF ECM.** 1) Turn the ignition switch to ON. 2) Measure the voltage between ECM and chassis ground. ***Connector & terminal*** ***(B136) No. 2 (+) — Chassis ground (–):*** ***(B136) No. 30 (+) — Chassis ground (–):***	Is the voltage 10 V or more?	Go to step **4**.	Repair the open or ground short circuit of harness of power supply circuit.
4	**CHECK INPUT VOLTAGE OF MAIN RELAY.** Measure the voltage between main relay connector and chassis ground. ***Connector & terminal*** ***(B220) No. 1 (+) — Chassis ground (–):*** ***(B220) No. 4 (+) — Chassis ground (–):***	Is the voltage 10 V or more?	Go to step **5**.	Repair the open or ground short circuit of harness of power supply circuit.
5	**CHECK INPUT VOLTAGE OF ECM.** 1) Turn the ignition switch to OFF. 2) Install the main relay. 3) Turn the ignition switch to ON. 4) Measure the voltage between ECM and chassis ground. ***Connector & terminal*** ***(B135) No. 13 (+) — Chassis ground (–):***	Is the voltage 10 V or more?	Go to step **6**.	Repair the open circuit in harness between ECM and main relay connector.
6	**CHECK INPUT VOLTAGE OF ECM.** 1) Turn the ignition switch to OFF. 2) Connect the connector to ECM. 3) Turn the ignition switch to ON. 4) Measure the voltage between ECM and chassis ground. ***Connector & terminal*** ***(B136) No. 1 (+) — Chassis ground (–):*** ***(B137) No. 7 (+) — Chassis ground (–):***	Is the voltage 10 V or more?	Check ignition control system. <Ref. to EN(H4DOTC)(diag)-73, IGNITION CONTROL SYSTEM, Diagnostics for Engine Starting Failure.>	Repair the harness and connector. NOTE: In this case, repair the following item: • Open circuit in harness between ECM and main relay connector • Poor contact of main relay connector • Poor contact of ECM connector

D: IGNITION CONTROL SYSTEM

CAUTION:
After servicing or replacing faulty parts, perform Clear Memory Mode <Ref. to EN(H4DOTC)(diag)-55, OPERATION, Clear Memory Mode.>, and Inspection Mode <Ref. to EN(H4DOTC)(diag)-44, PROCEDURE, Inspection Mode.>.
WIRING DIAGRAM:

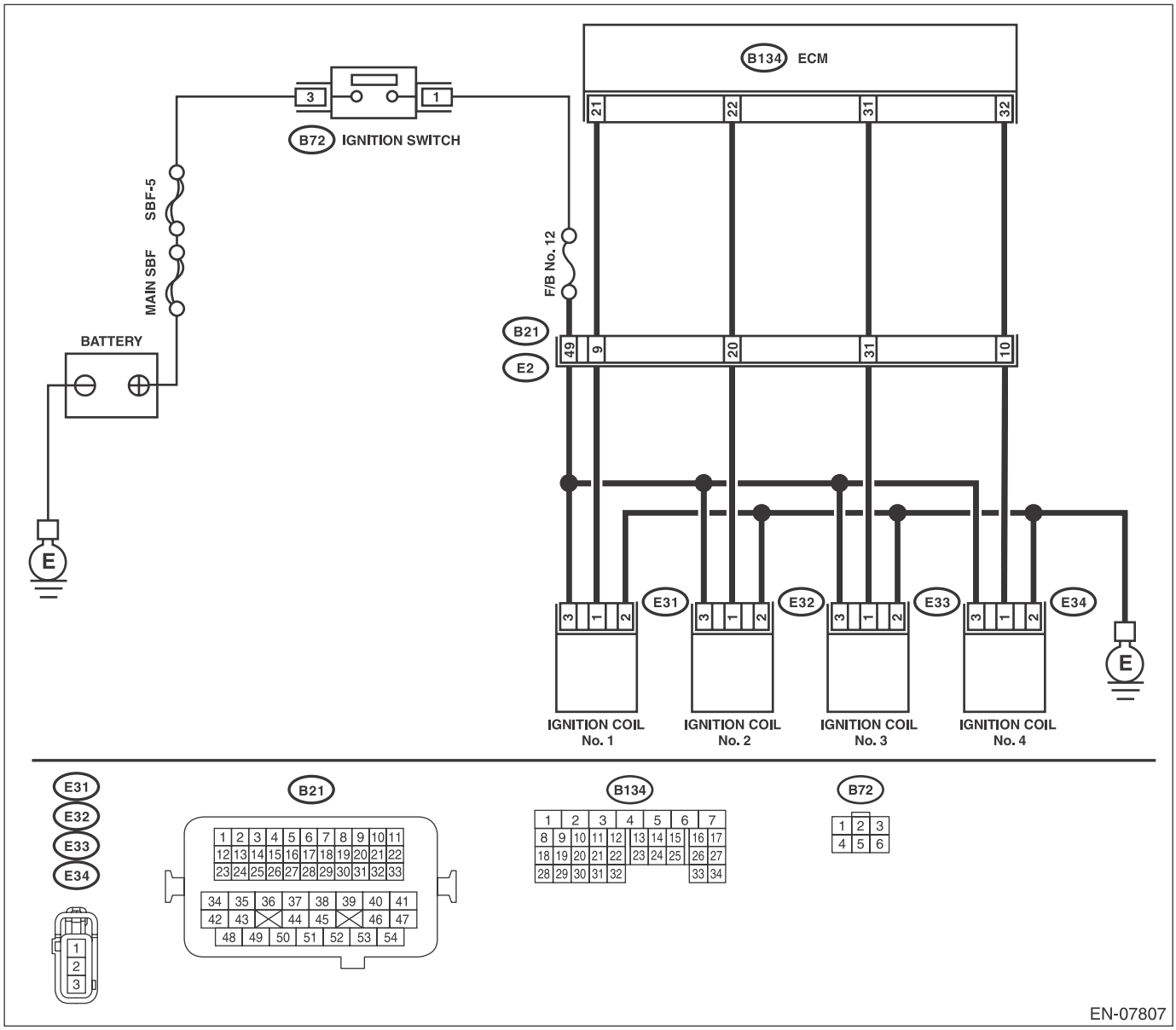

Step		Check	Yes	No
1	**CHECK SPARK PLUG CONDITION.** 1) Remove the spark plug. <Ref. to IG(H4DOTC)-4, REMOVAL, Spark Plug.> 2) Check the spark plug condition. <Ref. to IG(H4DOTC)-4, INSPECTION, Spark Plug.>	Is the spark plug condition normal?	Go to step **2**.	Replace the spark plug. <Ref. to IG(H4DOTC)-4, Spark Plug.>

	Step	Check	Yes	No
2	**CHECK IGNITION SYSTEM FOR SPARKS.** 1) Connect the spark plug to ignition coil. 2) Release the fuel pressure. <Ref. to FU(H4DOTC)-65, RELEASING OF FUEL PRESSURE, PROCEDURE, Fuel.> 3) Contact the spark plug thread portion to engine. 4) While opening the throttle valve fully, crank the engine to check that spark occurs at each cylinder.	Does spark occur at each cylinder?	Check fuel pump system. <Ref. to EN(H4DOTC)(diag)-75, FUEL PUMP CIRCUIT, Diagnostics for Engine Starting Failure.>	Go to step **3**.
3	**CHECK IGNITION COIL POWER SUPPLY CIRCUIT.** 1) Turn the ignition switch to OFF. 2) Disconnect the connector from ignition coil. 3) Turn the ignition switch to ON. 4) Measure the voltage between ignition coil connector and engine ground. ***Connector & terminal*** ***(E31) No. 3 (+) — Engine ground (–):*** ***(E32) No. 3 (+) — Engine ground (–):*** ***(E33) No. 3 (+) — Engine ground (–):*** ***(E34) No. 3 (+) — Engine ground (–):***	Is the voltage 10 V or more?	Go to step **4**.	Repair the harness and connector. NOTE: In this case, repair the following item: • Open circuit or short circuit to ground in power supply circuit • Poor contact of coupling connector • Blown-out of fuse (F/B No. 12)
4	**CHECK HARNESS OF IGNITION COIL GROUND CIRCUIT.** 1) Turn the ignition switch to OFF. 2) Measure the resistance of harness between ignition coil connector and engine ground. ***Connector & terminal*** ***(E31) No. 2 — Engine ground:*** ***(E32) No. 2 — Engine ground:*** ***(E33) No. 2 — Engine ground:*** ***(E34) No. 2 — Engine ground:***	Is the resistance less than 5 Ω?	Go to step **5**.	Repair the open circuit in harness between ignition coil connector and engine grounding terminal.
5	**CHECK HARNESS BETWEEN ECM AND IGNITION COIL CONNECTOR.** 1) Disconnect the connector from ECM. 2) Measure the resistance of harness between ECM and ignition coil connector. ***Connector & terminal*** ***(B134) No. 21 — (E31) No. 1:*** ***(B134) No. 22 — (E32) No. 1:*** ***(B134) No. 31 — (E33) No. 1:*** ***(B134) No. 32 — (E34) No. 1:***	Is the resistance less than 1 Ω?	Go to step **6**.	Repair the harness and connector. NOTE: In this case, repair the following item: • Open circuit of harness between ECM and ignition coil connector • Poor contact of coupling connector
6	**CHECK HARNESS BETWEEN ECM AND IGNITION COIL CONNECTOR.** Measure the resistance of harness between ECM and engine ground. ***Connector & terminal*** ***(B134) No. 21 — Engine ground:*** ***(B134) No. 22 — Engine ground:*** ***(B134) No. 31 — Engine ground:*** ***(B134) No. 32 — Engine ground:***	Is the resistance 1 MΩ or more?	Go to step **7**.	Repair the ground short circuit of harness between ECM and ignition coil connector.
7	**CHECK FOR POOR CONTACT.** Check for poor contact of ECM connector.	Is there poor contact of ECM connector?	Repair the poor contact of ECM connector.	Replace the ignition coil. <Ref. to IG(H4DOTC)-6, Ignition Coil.>

E: FUEL PUMP CIRCUIT

CAUTION:
After servicing or replacing faulty parts, perform Clear Memory Mode <Ref. to EN(H4DOTC)(diag)-55, OPERATION, Clear Memory Mode.>, and Inspection Mode <Ref. to EN(H4DOTC)(diag)-44, PROCEDURE, Inspection Mode.>.
WIRING DIAGRAM:

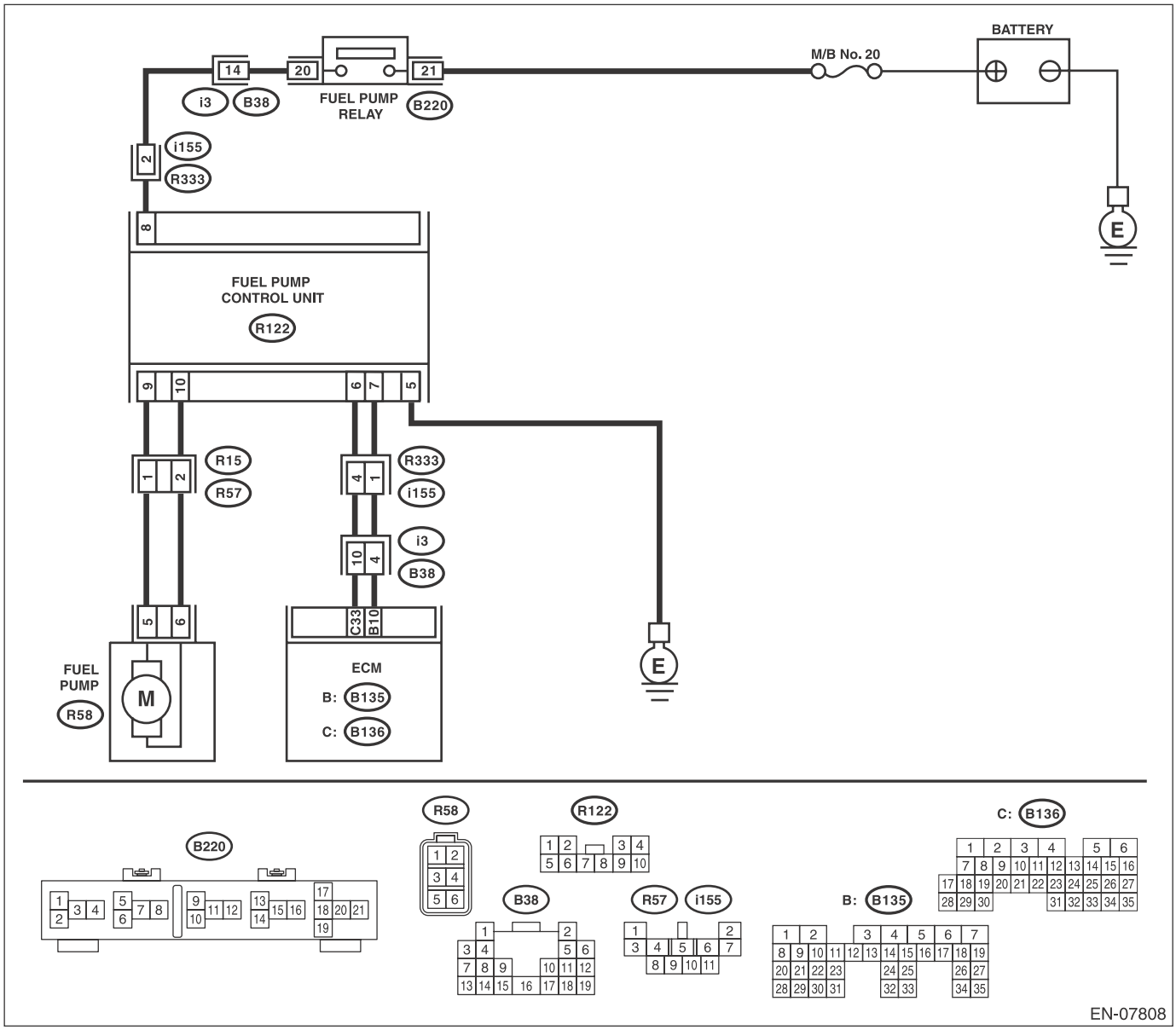

Step		Check	Yes	No
1	**CHECK OPERATING SOUND OF FUEL PUMP.** Make sure that the fuel pump operates for two seconds when turning the ignition switch to ON. NOTE: Fuel pump operation can be executed using the Subaru Select Monitor. For detailed procedures, refer to "SYSTEM OPERATION CHECK MODE". <Ref. to EN(H4DOTC)(diag)-56, System Operation Check Mode.>	Does the fuel pump emit operating sound?	Check the fuel injector circuit. <Ref. to EN(H4DOTC)(diag)-76, FUEL INJECTOR CIRCUIT, Diagnostics for Engine Starting Failure.>	Display the DTC. <Ref. to EN(H4DOTC)(diag)-43, OPERATION, Read Diagnostic Trouble Code (DTC).>

F: FUEL INJECTOR CIRCUIT

CAUTION:
- **Check or repair only faulty parts.**
- **After servicing or replacing faulty parts, perform Clear Memory Mode <Ref. to EN(H4DOTC)(diag)-55, OPERATION, Clear Memory Mode.>, and Inspection Mode <Ref. to EN(H4DOTC)(diag)-44, PROCEDURE, Inspection Mode.>.**

WIRING DIAGRAM:

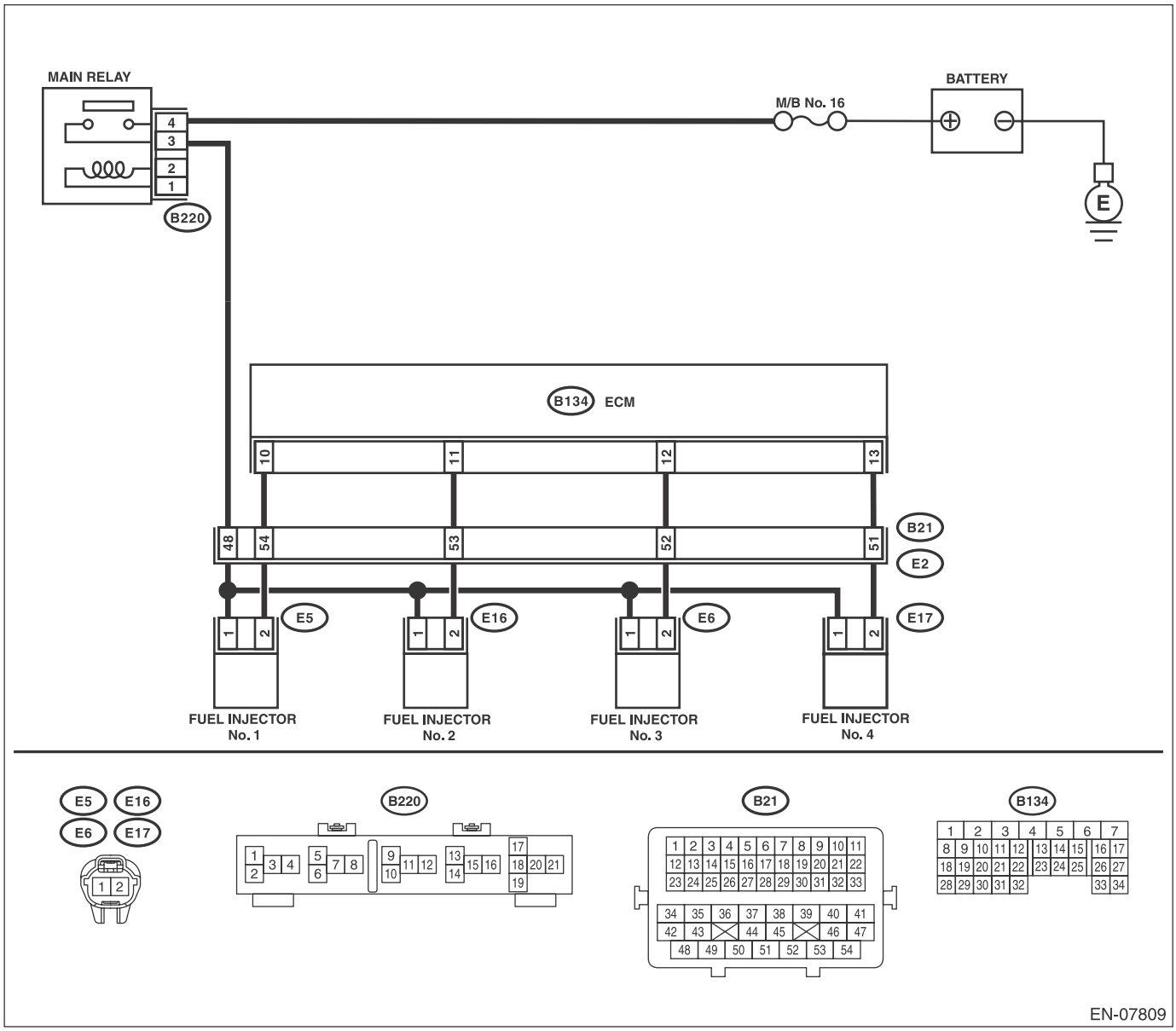

Step		Check	Yes	No
1	**CHECK OPERATION OF EACH FUEL INJECTOR.** While cranking the engine, check each fuel injector emits operating sound. Use a sound scope or attach a screwdriver to the injector for this check.	Does the fuel injector emit operating sound?	Check the fuel pressure. <Ref. to ME(H4DOTC)-26, INSPECTION, Fuel Pressure.>	Go to step **2**.

	Step	Check	Yes	No
2	**CHECK POWER SUPPLY TO EACH FUEL INJECTOR.** 1) Turn the ignition switch to OFF. 2) Disconnect the connector from fuel injector. 3) Turn the ignition switch to ON. 4) Measure the voltage between fuel injector connector and the engine ground. ***Connector & terminal*** ***#1 (E5) No. 1 (+) — Engine ground (–):*** ***#2 (E16) No. 1 (+) — Engine ground (–):*** ***#3 (E6) No. 1 (+) — Engine ground (–):*** ***#4 (E17) No. 1 (+) — Engine ground (–):***	Is the voltage 10 V or more?	Go to step **3**.	Repair the harness and connector. NOTE: In this case, repair the following item: • Open circuit in harness between main relay and fuel injector connector • Poor contact of main relay connector • Poor contact of coupling connector
3	**CHECK HARNESS BETWEEN ECM AND FUEL INJECTOR CONNECTOR.** 1) Disconnect the connector from ECM. 2) Measure the resistance of harness between ECM and fuel injector connector. ***Connector & terminal*** ***#1 (B134) No. 10 — (E5) No. 2:*** ***#2 (B134) No. 11 — (E16) No. 2:*** ***#3 (B134) No. 12 — (E6) No. 2:*** ***#4 (B134) No. 13 — (E17) No. 2:***	Is the resistance less than 1 Ω?	Go to step **4**.	Repair the harness and connector. NOTE: In this case, repair the following item: • Open circuit in harness between ECM and fuel injector connector • Poor contact of coupling connector
4	**CHECK HARNESS BETWEEN ECM AND FUEL INJECTOR CONNECTOR.** Measure the resistance between ECM and chassis ground. ***Connector & terminal*** ***#1 (B134) No. 10 — Chassis ground:*** ***#2 (B134) No. 11 — Chassis ground:*** ***#3 (B134) No. 12 — Chassis ground:*** ***#4 (B134) No. 13 — Chassis ground:***	Is the resistance 1 MΩ or more?	Go to step **5**.	Repair the ground short circuit of harness between ECM and fuel injector connector.
5	**CHECK EACH FUEL INJECTOR.** Measure the resistance between each fuel injector terminals. ***Terminals*** ***No. 1 — No. 2:***	Is the resistance 5 — 20 Ω?	Go to step **6**.	Replace the faulty fuel injector. <Ref. to FU(H4DOTC)-43, Fuel Injector.>
6	**CHECK FOR POOR CONTACT.** Check for poor contact of ECM connector.	Is there poor contact of ECM connector?	Repair the poor contact of ECM connector.	Inspection using “General Diagnostic Table”. <Ref. to EN(H4DOTC)(diag)-337, INSPECTION, General Diagnostic Table.>

17.List of Diagnostic Trouble Code (DTC)

A: LIST

DTC	Item	Index
P0011	Intake Camshaft Position - Timing Over-Advanced or System Performance (Bank 1)	<Ref. to EN(H4DOTC)(diag)-86, DTC P0011 INTAKE CAMSHAFT POSITION - TIMING OVER-ADVANCED OR SYSTEM PERFORMANCE (BANK 1), Diagnostic Procedure with Diagnostic Trouble Code (DTC).>
P0014	Exhaust AVCS System 1 (Range/Performance)	<Ref. to EN(H4DOTC)(diag)-87, DTC P0014 EXHAUST AVCS SYSTEM 1 (RANGE/PERFORMANCE), Diagnostic Procedure with Diagnostic Trouble Code (DTC).>
P0016	Crankshaft Position - Camshaft Position Correlation (Bank1)	<Ref. to EN(H4DOTC)(diag)-88, DTC P0016 CRANKSHAFT POSITION - CAMSHAFT POSITION CORRELATION (BANK1), Diagnostic Procedure with Diagnostic Trouble Code (DTC).>
P0017	Crank and Cam Timing B System Failure (Bank 1)	<Ref. to EN(H4DOTC)(diag)-89, DTC P0017 CRANK AND CAM TIMING B SYSTEM FAILURE (BANK 1), Diagnostic Procedure with Diagnostic Trouble Code (DTC).>
P0018	Crankshaft Position - Camshaft Position Correlation (Bank2)	<Ref. to EN(H4DOTC)(diag)-90, DTC P0018 CRANKSHAFT POSITION - CAMSHAFT POSITION CORRELATION (BANK2), Diagnostic Procedure with Diagnostic Trouble Code (DTC).>
P0019	Crank and Cam Timing B System Failure (Bank 2)	<Ref. to EN(H4DOTC)(diag)-91, DTC P0019 CRANK AND CAM TIMING B SYSTEM FAILURE (BANK 2), Diagnostic Procedure with Diagnostic Trouble Code (DTC).>
P0021	Intake Camshaft Position - Timing Over-Advanced or System Performance (Bank 2)	<Ref. to EN(H4DOTC)(diag)-92, DTC P0021 INTAKE CAMSHAFT POSITION - TIMING OVER-ADVANCED OR SYSTEM PERFORMANCE (BANK 2), Diagnostic Procedure with Diagnostic Trouble Code (DTC).>
P0024	Exhaust AVCS System 2 (Range/Performance)	<Ref. to EN(H4DOTC)(diag)-93, DTC P0024 EXHAUST AVCS SYSTEM 2 (RANGE/PERFORMANCE), Diagnostic Procedure with Diagnostic Trouble Code (DTC).>
P0030	HO2S Heater Control Circuit (Bank 1 Sensor 1)	<Ref. to EN(H4DOTC)(diag)-94, DTC P0030 HO2S HEATER CONTROL CIRCUIT (BANK 1 SENSOR 1), Diagnostic Procedure with Diagnostic Trouble Code (DTC).>
P0031	HO2S Heater Control Circuit Low (Bank 1 Sensor 1)	<Ref. to EN(H4DOTC)(diag)-96, DTC P0031 HO2S HEATER CONTROL CIRCUIT LOW (BANK 1 SENSOR 1), Diagnostic Procedure with Diagnostic Trouble Code (DTC).>
P0032	HO2S Heater Control Circuit High (Bank 1 Sensor 1)	<Ref. to EN(H4DOTC)(diag)-98, DTC P0032 HO2S HEATER CONTROL CIRCUIT HIGH (BANK 1 SENSOR 1), Diagnostic Procedure with Diagnostic Trouble Code (DTC).>
P0037	HO2S Heater Control Circuit Low (Bank 1 Sensor 2)	<Ref. to EN(H4DOTC)(diag)-100, DTC P0037 HO2S HEATER CONTROL CIRCUIT LOW (BANK 1 SENSOR 2), Diagnostic Procedure with Diagnostic Trouble Code (DTC).>
P0038	HO2S Heater Control Circuit High (Bank 1 Sensor 2)	<Ref. to EN(H4DOTC)(diag)-102, DTC P0038 HO2S HEATER CONTROL CIRCUIT HIGH (BANK 1 SENSOR 2), Diagnostic Procedure with Diagnostic Trouble Code (DTC).>
P0068	MAP/MAF - Throttle Position Correlation	<Ref. to EN(H4DOTC)(diag)-104, DTC P0068 MAP/MAF - THROTTLE POSITION CORRELATION, Diagnostic Procedure with Diagnostic Trouble Code (DTC).>
P0101	Mass or Volume Air Flow Circuit Range/Performance	<Ref. to EN(H4DOTC)(diag)-106, DTC P0101 MASS OR VOLUME AIR FLOW CIRCUIT RANGE/PERFORMANCE, Diagnostic Procedure with Diagnostic Trouble Code (DTC).>
P0102	Mass or Volume Air Flow Circuit Low Input	<Ref. to EN(H4DOTC)(diag)-108, DTC P0102 MASS OR VOLUME AIR FLOW CIRCUIT LOW INPUT, Diagnostic Procedure with Diagnostic Trouble Code (DTC).>
P0103	Mass or Volume Air Flow Circuit High Input	<Ref. to EN(H4DOTC)(diag)-110, DTC P0103 MASS OR VOLUME AIR FLOW CIRCUIT HIGH INPUT, Diagnostic Procedure with Diagnostic Trouble Code (DTC).>

DTC	Item	Index
P0107	Manifold Absolute Pressure/Barometric Pressure Circuit Low Input	<Ref. to EN(H4DOTC)(diag)-112, DTC P0107 MANIFOLD ABSOLUTE PRESSURE/BAROMETRIC PRESSURE CIRCUIT LOW INPUT, Diagnostic Procedure with Diagnostic Trouble Code (DTC).>
P0108	Manifold Absolute Pressure/Barometric Pressure Circuit High Input	<Ref. to EN(H4DOTC)(diag)-114, DTC P0108 MANIFOLD ABSOLUTE PRESSURE/BAROMETRIC PRESSURE CIRCUIT HIGH INPUT, Diagnostic Procedure with Diagnostic Trouble Code (DTC).>
P0111	Intake Air Temperature Sensor 1 Circuit Range/Performance	<Ref. to EN(H4DOTC)(diag)-116, DTC P0111 INTAKE AIR TEMPERATURE SENSOR 1 CIRCUIT RANGE/PERFORMANCE, Diagnostic Procedure with Diagnostic Trouble Code (DTC).>
P0112	Intake Air Temperature Sensor 1 Circuit Low	<Ref. to EN(H4DOTC)(diag)-118, DTC P0112 INTAKE AIR TEMPERATURE SENSOR 1 CIRCUIT LOW, Diagnostic Procedure with Diagnostic Trouble Code (DTC).>
P0113	Intake Air Temperature Sensor 1 Circuit High	<Ref. to EN(H4DOTC)(diag)-120, DTC P0113 INTAKE AIR TEMPERATURE SENSOR 1 CIRCUIT HIGH, Diagnostic Procedure with Diagnostic Trouble Code (DTC).>
P0117	Engine Coolant Temperature Circuit Low	<Ref. to EN(H4DOTC)(diag)-122, DTC P0117 ENGINE COOLANT TEMPERATURE CIRCUIT LOW, Diagnostic Procedure with Diagnostic Trouble Code (DTC).>
P0118	Engine Coolant Temperature Circuit High	<Ref. to EN(H4DOTC)(diag)-124, DTC P0118 ENGINE COOLANT TEMPERATURE CIRCUIT HIGH, Diagnostic Procedure with Diagnostic Trouble Code (DTC).>
P0122	Throttle/Pedal Position Sensor/Switch “A” Circuit Low	<Ref. to EN(H4DOTC)(diag)-126, DTC P0122 THROTTLE/PEDAL POSITION SENSOR/SWITCH “A” CIRCUIT LOW, Diagnostic Procedure with Diagnostic Trouble Code (DTC).>
P0123	Throttle/Pedal Position Sensor/Switch “A” Circuit High	<Ref. to EN(H4DOTC)(diag)-128, DTC P0123 THROTTLE/PEDAL POSITION SENSOR/SWITCH “A” CIRCUIT HIGH, Diagnostic Procedure with Diagnostic Trouble Code (DTC).>
P0125	Insufficient Coolant Temperature for Closed Loop Fuel Control	<Ref. to EN(H4DOTC)(diag)-130, DTC P0125 INSUFFICIENT COOLANT TEMPERATURE FOR CLOSED LOOP FUEL CONTROL, Diagnostic Procedure with Diagnostic Trouble Code (DTC).>
P0126	Insufficient Engine Coolant Temperature for Stable Operation	<Ref. to EN(H4DOTC)(diag)-131, DTC P0126 INSUFFICIENT ENGINE COOLANT TEMPERATURE FOR STABLE OPERATION, Diagnostic Procedure with Diagnostic Trouble Code (DTC).>
P0128	Coolant Thermostat (Engine Coolant Temperature Below Thermostat Regulating Temperature)	<Ref. to EN(H4DOTC)(diag)-133, DTC P0128 COOLANT THERMOSTAT (ENGINE COOLANT TEMPERATURE BELOW THERMOSTAT REGULATING TEMPERATURE), Diagnostic Procedure with Diagnostic Trouble Code (DTC).>
P0131	O2 Sensor Circuit Low Voltage (Bank 1 Sensor 1)	<Ref. to EN(H4DOTC)(diag)-134, DTC P0131 O2 SENSOR CIRCUIT LOW VOLTAGE (BANK 1 SENSOR 1), Diagnostic Procedure with Diagnostic Trouble Code (DTC).>
P0132	O2 Sensor Circuit High Voltage (Bank 1 Sensor 1)	<Ref. to EN(H4DOTC)(diag)-136, DTC P0132 O2 SENSOR CIRCUIT HIGH VOLTAGE (BANK 1 SENSOR 1), Diagnostic Procedure with Diagnostic Trouble Code (DTC).>
P0133	O2 Sensor Circuit Slow Response (Bank 1 Sensor 1)	<Ref. to EN(H4DOTC)(diag)-138, DTC P0133 O2 SENSOR CIRCUIT SLOW RESPONSE (BANK 1 SENSOR 1), Diagnostic Procedure with Diagnostic Trouble Code (DTC).>
P0134	O2 Sensor Circuit No Activity Detected (Bank 1 Sensor 1)	<Ref. to EN(H4DOTC)(diag)-140, DTC P0134 O2 SENSOR CIRCUIT NO ACTIVITY DETECTED (BANK 1 SENSOR 1), Diagnostic Procedure with Diagnostic Trouble Code (DTC).>
P0137	O2 Sensor Circuit Low Voltage (Bank 1 Sensor 2)	<Ref. to EN(H4DOTC)(diag)-142, DTC P0137 O2 SENSOR CIRCUIT LOW VOLTAGE (BANK 1 SENSOR 2), Diagnostic Procedure with Diagnostic Trouble Code (DTC).>
P0138	O2 Sensor Circuit High Voltage (Bank 1 Sensor 2)	<Ref. to EN(H4DOTC)(diag)-144, DTC P0138 O2 SENSOR CIRCUIT HIGH VOLTAGE (BANK 1 SENSOR 2), Diagnostic Procedure with Diagnostic Trouble Code (DTC).>

DTC	Item	Index
P0139	O2 Sensor Circuit Slow Response (Bank 1 Sensor 2)	<Ref. to EN(H4DOTC)(diag)-146, DTC P0139 O2 SENSOR CIRCUIT SLOW RESPONSE (BANK 1 SENSOR 2), Diagnostic Procedure with Diagnostic Trouble Code (DTC).>
P0140	O2 Sensor Circuit No Activity Detected (Bank 1 Sensor 2)	<Ref. to EN(H4DOTC)(diag)-148, DTC P0140 O2 SENSOR CIRCUIT NO ACTIVITY DETECTED (BANK1 SENSOR2), Diagnostic Procedure with Diagnostic Trouble Code (DTC).>
P0141	O2 Sensor Heater Circuit (Bank1 Sensor2)	<Ref. to EN(H4DOTC)(diag)-150, DTC P0141 O2 SENSOR HEATER CIRCUIT (BANK1 SENSOR2), Diagnostic Procedure with Diagnostic Trouble Code (DTC).>
P0171	System Too Lean (Bank 1)	<Ref. to EN(H4DOTC)(diag)-150, DTC P0171 SYSTEM TOO LEAN (BANK 1), Diagnostic Procedure with Diagnostic Trouble Code (DTC).>
P0172	System Too Rich (Bank 1)	<Ref. to EN(H4DOTC)(diag)-151, DTC P0172 SYSTEM TOO RICH (BANK 1), Diagnostic Procedure with Diagnostic Trouble Code (DTC).>
P0181	Fuel Temperature Sensor “A” Circuit Range/Performance	<Ref. to EN(H4DOTC)(diag)-153, DTC P0181 FUEL TEMPERATURE SENSOR “A” CIRCUIT RANGE/PERFORMANCE, Diagnostic Procedure with Diagnostic Trouble Code (DTC).>
P0182	Fuel Temperature Sensor “A” Circuit Low Input	<Ref. to EN(H4DOTC)(diag)-155, DTC P0182 FUEL TEMPERATURE SENSOR “A” CIRCUIT LOW INPUT, Diagnostic Procedure with Diagnostic Trouble Code (DTC).>
P0183	Fuel Temperature Sensor “A” Circuit High Input	<Ref. to EN(H4DOTC)(diag)-157, DTC P0183 FUEL TEMPERATURE SENSOR “A” CIRCUIT HIGH INPUT, Diagnostic Procedure with Diagnostic Trouble Code (DTC).>
P0222	Throttle/Pedal Position Sensor/ Switch “B” Circuit Low	<Ref. to EN(H4DOTC)(diag)-159, DTC P0222 THROTTLE/PEDAL POSITION SENSOR/SWITCH “B” CIRCUIT LOW, Diagnostic Procedure with Diagnostic Trouble Code (DTC).>
P0223	Throttle/Pedal Position Sensor/ Switch “B” Circuit High	<Ref. to EN(H4DOTC)(diag)-161, DTC P0223 THROTTLE/PEDAL POSITION SENSOR/SWITCH “B” CIRCUIT HIGH, Diagnostic Procedure with Diagnostic Trouble Code (DTC).>
P0230	Fuel Pump Primary Circuit	<Ref. to EN(H4DOTC)(diag)-163, DTC P0230 FUEL PUMP PRIMARY CIRCUIT, Diagnostic Procedure with Diagnostic Trouble Code (DTC).>
P0244	Turbo/Super Charger Wastegate Solenoid “A” Range/Performance	<Ref. to EN(H4DOTC)(diag)-166, DTC P0244 TURBO/SUPER CHARGER WASTEGATE SOLENOID “A” RANGE/PERFORMANCE, Diagnostic Procedure with Diagnostic Trouble Code (DTC).>
P0245	Turbo/Super Charger Wastegate Solenoid “A” Low	<Ref. to EN(H4DOTC)(diag)-168, DTC P0245 TURBO/SUPER CHARGER WASTEGATE SOLENOID “A” LOW, Diagnostic Procedure with Diagnostic Trouble Code (DTC).>
P0246	Turbo/Super Charger Wastegate Solenoid “A” High	<Ref. to EN(H4DOTC)(diag)-171, DTC P0246 TURBO/SUPER CHARGER WASTEGATE SOLENOID “A” HIGH, Diagnostic Procedure with Diagnostic Trouble Code (DTC).>
P0301	Cylinder 1 Misfire Detected	<Ref. to EN(H4DOTC)(diag)-172, DTC P0301 CYLINDER 1 MISFIRE DETECTED, Diagnostic Procedure with Diagnostic Trouble Code (DTC).>
P0302	Cylinder 2 Misfire Detected	<Ref. to EN(H4DOTC)(diag)-172, DTC P0302 CYLINDER 2 MISFIRE DETECTED, Diagnostic Procedure with Diagnostic Trouble Code (DTC).>
P0303	Cylinder 3 Misfire Detected	<Ref. to EN(H4DOTC)(diag)-172, DTC P0303 CYLINDER 3 MISFIRE DETECTED, Diagnostic Procedure with Diagnostic Trouble Code (DTC).>
P0304	Cylinder 4 Misfire Detected	<Ref. to EN(H4DOTC)(diag)-173, DTC P0304 CYLINDER 4 MISFIRE DETECTED, Diagnostic Procedure with Diagnostic Trouble Code (DTC).>
P0327	Knock Sensor 1 Circuit Low (Bank 1 or Single Sensor)	<Ref. to EN(H4DOTC)(diag)-179, DTC P0327 KNOCK SENSOR 1 CIRCUIT LOW (BANK 1 OR SINGLE SENSOR), Diagnostic Procedure with Diagnostic Trouble Code (DTC).>
P0328	Knock Sensor 1 Circuit High (Bank 1 or Single Sensor)	<Ref. to EN(H4DOTC)(diag)-181, DTC P0328 KNOCK SENSOR 1 CIRCUIT HIGH (BANK 1 OR SINGLE SENSOR), Diagnostic Procedure with Diagnostic Trouble Code (DTC).>
P0335	Crankshaft Position Sensor “A” Circuit	<Ref. to EN(H4DOTC)(diag)-183, DTC P0335 CRANKSHAFT POSITION SENSOR “A” CIRCUIT, Diagnostic Procedure with Diagnostic Trouble Code (DTC).>

DTC	Item	Index
P0336	Crankshaft Position Sensor “A” Circuit Range/Performance	<Ref. to EN(H4DOTC)(diag)-185, DTC P0336 CRANKSHAFT POSITION SENSOR “A” CIRCUIT RANGE/PERFORMANCE, Diagnostic Procedure with Diagnostic Trouble Code (DTC).>
P0340	Camshaft Position Sensor “A” Circuit (Bank 1 or Single Sensor)	<Ref. to EN(H4DOTC)(diag)-187, DTC P0340 CAMSHAFT POSITION SENSOR “A” CIRCUIT (BANK 1 OR SINGLE SENSOR), Diagnostic Procedure with Diagnostic Trouble Code (DTC).>
P0345	Camshaft Position Sensor “A” Circuit (Bank 2)	<Ref. to EN(H4DOTC)(diag)-189, DTC P0345 CAMSHAFT POSITION SENSOR “A” CIRCUIT (BANK 2), Diagnostic Procedure with Diagnostic Trouble Code (DTC).>
P0365	Camshaft Position Sensor “B” Circuit (Bank 1)	<Ref. to EN(H4DOTC)(diag)-191, DTC P0365 CAMSHAFT POSITION SENSOR “B” CIRCUIT (BANK 1), Diagnostic Procedure with Diagnostic Trouble Code (DTC).>
P0390	Camshaft Position Sensor “B” Circuit (Bank 2)	<Ref. to EN(H4DOTC)(diag)-193, DTC P0390 CAMSHAFT POSITION SENSOR “B” CIRCUIT (BANK 2), Diagnostic Procedure with Diagnostic Trouble Code (DTC).>
P0420	Catalyst System Efficiency Below Threshold (Bank 1)	<Ref. to EN(H4DOTC)(diag)-195, DTC P0420 CATALYST SYSTEM EFFICIENCY BELOW THRESHOLD (BANK 1), Diagnostic Procedure with Diagnostic Trouble Code (DTC).>
P0442	Evaporative Emission Control System Leak Detected (Small Leak)	<Ref. to EN(H4DOTC)(diag)-199, DTC P0442 EVAPORATIVE EMISSION CONTROL SYSTEM LEAK DETECTED (SMALL LEAK), Diagnostic Procedure with Diagnostic Trouble Code (DTC).>
P0447	Evaporative Emission Control System Vent Control Circuit Open	<Ref. to EN(H4DOTC)(diag)-202, DTC P0447 EVAPORATIVE EMISSION CONTROL SYSTEM VENT CONTROL CIRCUIT OPEN, Diagnostic Procedure with Diagnostic Trouble Code (DTC).>
P0448	Evaporative Emission Control System Vent Control Circuit Shorted	<Ref. to EN(H4DOTC)(diag)-204, DTC P0448 EVAPORATIVE EMISSION CONTROL SYSTEM VENT CONTROL CIRCUIT SHORTED, Diagnostic Procedure with Diagnostic Trouble Code (DTC).>
P0451	Evaporative Emission Control System Pressure Sensor	<Ref. to EN(H4DOTC)(diag)-206, DTC P0451 EVAPORATIVE EMISSION CONTROL SYSTEM PRESSURE SENSOR, Diagnostic Procedure with Diagnostic Trouble Code (DTC).>
P0452	Evaporative Emission Control System Pressure Sensor Low Input	<Ref. to EN(H4DOTC)(diag)-208, DTC P0452 EVAPORATIVE EMISSION CONTROL SYSTEM PRESSURE SENSOR LOW INPUT, Diagnostic Procedure with Diagnostic Trouble Code (DTC).>
P0453	Evaporative Emission Control System Pressure Sensor High Input	<Ref. to EN(H4DOTC)(diag)-210, DTC P0453 EVAPORATIVE EMISSION CONTROL SYSTEM PRESSURE SENSOR HIGH INPUT, Diagnostic Procedure with Diagnostic Trouble Code (DTC).>
P0456	Evaporative Emission Control System Leak Detected (Very Small Leak)	<Ref. to EN(H4DOTC)(diag)-212, DTC P0456 EVAPORATIVE EMISSION CONTROL SYSTEM LEAK DETECTED (VERY SMALL LEAK), Diagnostic Procedure with Diagnostic Trouble Code (DTC).>
P0457	Evaporative Emission Control System Leak Detected (Fuel Cap Loose/Off)	<Ref. to EN(H4DOTC)(diag)-215, DTC P0457 EVAPORATIVE EMISSION CONTROL SYSTEM LEAK DETECTED (FUEL CAP LOOSE/OFF), Diagnostic Procedure with Diagnostic Trouble Code (DTC).>
P0458	Evaporative Emission System Purge Control Valve Circuit Low	<Ref. to EN(H4DOTC)(diag)-218, DTC P0458 EVAPORATIVE EMISSION SYSTEM PURGE CONTROL VALVE CIRCUIT LOW, Diagnostic Procedure with Diagnostic Trouble Code (DTC).>
P0459	Evaporative Emission System Purge Control Valve Circuit High	<Ref. to EN(H4DOTC)(diag)-220, DTC P0459 EVAPORATIVE EMISSION SYSTEM PURGE CONTROL VALVE CIRCUIT HIGH, Diagnostic Procedure with Diagnostic Trouble Code (DTC).>
P0461	Fuel Level Sensor “A” Circuit Range/Performance	<Ref. to EN(H4DOTC)(diag)-222, DTC P0461 FUEL LEVEL SENSOR “A” CIRCUIT RANGE/PERFORMANCE, Diagnostic Procedure with Diagnostic Trouble Code (DTC).>
P0462	Fuel Level Sensor “A” Circuit Low	<Ref. to EN(H4DOTC)(diag)-222, DTC P0462 FUEL LEVEL SENSOR “A” CIRCUIT LOW, Diagnostic Procedure with Diagnostic Trouble Code (DTC).>
P0463	Fuel Level Sensor “A” Circuit High	<Ref. to EN(H4DOTC)(diag)-222, DTC P0463 FUEL LEVEL SENSOR “A” CIRCUIT HIGH, Diagnostic Procedure with Diagnostic Trouble Code (DTC).>

DTC	Item	Index
P0464	Fuel Level Sensor Circuit Intermittent	<Ref. to EN(H4DOTC)(diag)-223, DTC P0464 FUEL LEVEL SENSOR CIRCUIT INTERMITTENT, Diagnostic Procedure with Diagnostic Trouble Code (DTC).>
P0500	Vehicle Speed Sensor “A”	<Ref. to EN(H4DOTC)(diag)-223, DTC P0500 VEHICLE SPEED SENSOR “A”, Diagnostic Procedure with Diagnostic Trouble Code (DTC).>
P0506	Idle Air Control System RPM Lower Than Expected	<Ref. to EN(H4DOTC)(diag)-224, DTC P0506 IDLE AIR CONTROL SYSTEM RPM LOWER THAN EXPECTED, Diagnostic Procedure with Diagnostic Trouble Code (DTC).>
P0507	Idle Air Control System RPM Higher Than Expected	<Ref. to EN(H4DOTC)(diag)-225, DTC P0507 IDLE AIR CONTROL SYSTEM RPM HIGHER THAN EXPECTED, Diagnostic Procedure with Diagnostic Trouble Code (DTC).>
P0512	Starter Request Circuit	<Ref. to EN(H4DOTC)(diag)-226, DTC P0512 STARTER REQUEST CIRCUIT, Diagnostic Procedure with Diagnostic Trouble Code (DTC).>
P0513	Incorrect Immobilizer Key	<Ref. to IM(diag)-16, DTC P0513 INCORRECT IMMOBILIZER KEY, Diagnostic Procedure with Diagnostic Trouble Code (DTC).>
P0604	Internal Control Module Random Access Memory (RAM) Error	<Ref. to EN(H4DOTC)(diag)-228, DTC P0604 INTERNAL CONTROL MODULE RANDOM ACCESS MEMORY (RAM) ERROR, Diagnostic Procedure with Diagnostic Trouble Code (DTC).>
P0605	Internal Control Module Read Only Memory (ROM) Error	<Ref. to EN(H4DOTC)(diag)-229, DTC P0605 INTERNAL CONTROL MODULE READ ONLY MEMORY (ROM) ERROR, Diagnostic Procedure with Diagnostic Trouble Code (DTC).>
P0607	Throttle Control System Circuit Range/Performance	<Ref. to EN(H4DOTC)(diag)-230, DTC P0607 THROTTLE CONTROL SYSTEM CIRCUIT RANGE/PERFORMANCE, Diagnostic Procedure with Diagnostic Trouble Code (DTC).>
P0638	Throttle Actuator Control Range/Performance (Bank 1)	<Ref. to EN(H4DOTC)(diag)-231, DTC P0638 THROTTLE ACTUATOR CONTROL RANGE/PERFORMANCE (BANK 1), Diagnostic Procedure with Diagnostic Trouble Code (DTC).>
P0851	Neutral Switch Input Circuit Low (MT Model)	<Ref. to EN(H4DOTC)(diag)-232, DTC P0851 NEUTRAL SWITCH INPUT CIRCUIT LOW (MT MODEL), Diagnostic Procedure with Diagnostic Trouble Code (DTC).>
P0852	Neutral Switch Input Circuit High (MT Model)	<Ref. to EN(H4DOTC)(diag)-234, DTC P0852 NEUTRAL SWITCH INPUT CIRCUIT HIGH (MT MODEL), Diagnostic Procedure with Diagnostic Trouble Code (DTC).>
P1152	O2 Sensor Circuit Range/Performance (Low) (Bank1 Sensor1)	<Ref. to EN(H4DOTC)(diag)-236, DTC P1152 O2 SENSOR CIRCUIT RANGE/PERFORMANCE (LOW) (BANK1 SENSOR1), Diagnostic Procedure with Diagnostic Trouble Code (DTC).>
P1153	O2 Sensor Circuit Range/Performance (High) (Bank1 Sensor1)	<Ref. to EN(H4DOTC)(diag)-238, DTC P1153 O2 SENSOR CIRCUIT RANGE/PERFORMANCE (HIGH) (BANK1 SENSOR1), Diagnostic Procedure with Diagnostic Trouble Code (DTC).>
P1160	Return Spring Failure	<Ref. to EN(H4DOTC)(diag)-239, DTC P1160 RETURN SPRING FAILURE, Diagnostic Procedure with Diagnostic Trouble Code (DTC).>
P1400	Fuel Tank Pressure Control Solenoid Valve Circuit Low	<Ref. to EN(H4DOTC)(diag)-240, DTC P1400 FUEL TANK PRESSURE CONTROL SOLENOID VALVE CIRCUIT LOW, Diagnostic Procedure with Diagnostic Trouble Code (DTC).>
P1420	Fuel Tank Pressure Control Sol. Valve Circuit High	<Ref. to EN(H4DOTC)(diag)-242, DTC P1420 FUEL TANK PRESSURE CONTROL SOL. VALVE CIRCUIT HIGH, Diagnostic Procedure with Diagnostic Trouble Code (DTC).>
P1443	Vent Control Solenoid Valve Function Problem	<Ref. to EN(H4DOTC)(diag)-244, DTC P1443 VENT CONTROL SOLENOID VALVE FUNCTION PROBLEM, Diagnostic Procedure with Diagnostic Trouble Code (DTC).>
P1518	Starter Switch Circuit Low Input	<Ref. to EN(H4DOTC)(diag)-246, DTC P1518 STARTER SWITCH CIRCUIT LOW INPUT, Diagnostic Procedure with Diagnostic Trouble Code (DTC).>
P1560	Back-Up Voltage Circuit Malfunction	<Ref. to EN(H4DOTC)(diag)-248, DTC P1560 BACK-UP VOLTAGE CIRCUIT MALFUNCTION, Diagnostic Procedure with Diagnostic Trouble Code (DTC).>

DTC	Item	Index
P1570	Antenna	<Ref. to IM(diag)-17, DTC P1570 ANTENNA, Diagnostic Procedure with Diagnostic Trouble Code (DTC).>
P1571	Reference Code Incompatibility	<Ref. to IM(diag)-19, DTC P1571 REFERENCE CODE INCOMPATIBILITY, Diagnostic Procedure with Diagnostic Trouble Code (DTC).>
P1572	IMM Circuit Failure	<Ref. to IM(diag)-20, DTC P1572 IMM CIRCUIT FAILURE (EXCEPT ANTENNA CIRCUIT), Diagnostic Procedure with Diagnostic Trouble Code (DTC).>
P1574	Key Communication Failure	<Ref. to IM(diag)-22, DTC P1574 KEY COMMUNICATION FAILURE, Diagnostic Procedure with Diagnostic Trouble Code (DTC).>
P1576	EGI Control Module EEPROM	<Ref. to IM(diag)-22, DTC P1576 EGI CONTROL MODULE EEPROM, Diagnostic Procedure with Diagnostic Trouble Code (DTC).>
P1577	IMM Control Module EEPROM	<Ref. to IM(diag)-23, DTC P1577 IMM CONTROL MODULE EEPROM, Diagnostic Procedure with Diagnostic Trouble Code (DTC).>
P1578	Meter Failure	<Ref. to IM(diag)-24, DTC P1578 METER FAILURE, Diagnostic Procedure with Diagnostic Trouble Code (DTC).>
P1602	Control Module Programming Error	<Ref. to EN(H4DOTC)(diag)-250, DTC P1602 CONTROL MODULE PROGRAMMING ERROR, Diagnostic Procedure with Diagnostic Trouble Code (DTC).>
P2004	Intake Manifold Runner Control Stuck Open (Bank 1)	<Ref. to EN(H4DOTC)(diag)-259, DTC P2004 INTAKE MANIFOLD RUNNER CONTROL STUCK OPEN (BANK 1), Diagnostic Procedure with Diagnostic Trouble Code (DTC).>
P2005	Intake Manifold Runner Control Stuck Open (Bank 2)	<Ref. to EN(H4DOTC)(diag)-260, DTC P2005 INTAKE MANIFOLD RUNNER CONTROL STUCK OPEN (BANK 2), Diagnostic Procedure with Diagnostic Trouble Code (DTC).>
P2006	Intake Manifold Runner Control Stuck Closed (Bank 1)	<Ref. to EN(H4DOTC)(diag)-261, DTC P2006 INTAKE MANIFOLD RUNNER CONTROL STUCK CLOSED (BANK 1), Diagnostic Procedure with Diagnostic Trouble Code (DTC).>
P2007	Intake Manifold Runner Control Stuck Closed (Bank 2)	<Ref. to EN(H4DOTC)(diag)-262, DTC P2007 INTAKE MANIFOLD RUNNER CONTROL STUCK CLOSED (BANK 2), Diagnostic Procedure with Diagnostic Trouble Code (DTC).>
P2008	Intake Manifold Runner Control Circuit / Open (Bank 1)	<Ref. to EN(H4DOTC)(diag)-263, DTC P2008 INTAKE MANIFOLD RUNNER CONTROL CIRCUIT / OPEN (BANK 1), Diagnostic Procedure with Diagnostic Trouble Code (DTC).>
P2009	Intake Manifold Runner Control Circuit Low (Bank 1)	<Ref. to EN(H4DOTC)(diag)-265, DTC P2009 INTAKE MANIFOLD RUNNER CONTROL CIRCUIT LOW (BANK 1), Diagnostic Procedure with Diagnostic Trouble Code (DTC).>
P2011	Intake Manifold Runner Control Circuit / Open (Bank 2)	<Ref. to EN(H4DOTC)(diag)-267, DTC P2011 INTAKE MANIFOLD RUNNER CONTROL CIRCUIT / OPEN (BANK 2), Diagnostic Procedure with Diagnostic Trouble Code (DTC).>
P2012	Intake Manifold Runner Control Circuit Low (Bank 2)	<Ref. to EN(H4DOTC)(diag)-269, DTC P2012 INTAKE MANIFOLD RUNNER CONTROL CIRCUIT LOW (BANK 2), Diagnostic Procedure with Diagnostic Trouble Code (DTC).>
P2016	Intake Manifold Runner Position Sensor / Switch Circuit Low (Bank 1)	<Ref. to EN(H4DOTC)(diag)-271, DTC P2016 INTAKE MANIFOLD RUNNER POSITION SENSOR / SWITCH CIRCUIT LOW (BANK 1), Diagnostic Procedure with Diagnostic Trouble Code (DTC).>
P2017	Intake Manifold Runner Position Sensor / Switch Circuit High (Bank 1)	<Ref. to EN(H4DOTC)(diag)-273, DTC P2017 INTAKE MANIFOLD RUNNER POSITION SENSOR / SWITCH CIRCUIT HIGH (BANK 1), Diagnostic Procedure with Diagnostic Trouble Code (DTC).>
P2021	Intake Manifold Runner Position Sensor / Switch Circuit Low (Bank 2)	<Ref. to EN(H4DOTC)(diag)-275, DTC P2021 INTAKE MANIFOLD RUNNER POSITION SENSOR / SWITCH CIRCUIT LOW (BANK 2), Diagnostic Procedure with Diagnostic Trouble Code (DTC).>
P2022	Intake Manifold Runner Position Sensor / Switch Circuit High (Bank 2)	<Ref. to EN(H4DOTC)(diag)-277, DTC P2022 INTAKE MANIFOLD RUNNER POSITION SENSOR / SWITCH CIRCUIT HIGH (BANK 2), Diagnostic Procedure with Diagnostic Trouble Code (DTC).>

DTC	Item	Index
P2088	Intake Camshaft Position Actuator Control Circuit Low (Bank 1)	<Ref. to EN(H4DOTC)(diag)-279, DTC P2088 INTAKE CAMSHAFT POSITION ACTUATOR CONTROL CIRCUIT LOW (BANK 1), Diagnostic Procedure with Diagnostic Trouble Code (DTC).>
P2089	Intake Camshaft Position Actuator Control Circuit High (Bank 1)	<Ref. to EN(H4DOTC)(diag)-281, DTC P2089 INTAKE CAMSHAFT POSITION ACTUATOR CONTROL CIRCUIT HIGH (BANK 1), Diagnostic Procedure with Diagnostic Trouble Code (DTC).>
P2090	Exhaust Camshaft Position Actuator Control Circuit Low (Bank 1)	<Ref. to EN(H4DOTC)(diag)-283, DTC P2090 EXHAUST CAMSHAFT POSITION ACTUATOR CONTROL CIRCUIT LOW (BANK 1), Diagnostic Procedure with Diagnostic Trouble Code (DTC).>
P2091	Exhaust Camshaft Position Actuator Control Circuit High (Bank 1)	<Ref. to EN(H4DOTC)(diag)-285, DTC P2091 EXHAUST CAMSHAFT POSITION ACTUATOR CONTROL CIRCUIT HIGH (BANK 1), Diagnostic Procedure with Diagnostic Trouble Code (DTC).>
P2092	Intake Camshaft Position Actuator Control Circuit Low (Bank 2)	<Ref. to EN(H4DOTC)(diag)-287, DTC P2092 INTAKE CAMSHAFT POSITION ACTUATOR CONTROL CIRCUIT LOW (BANK 2), Diagnostic Procedure with Diagnostic Trouble Code (DTC).>
P2093	Intake Camshaft Position Actuator Control Circuit High (Bank 2)	<Ref. to EN(H4DOTC)(diag)-289, DTC P2093 INTAKE CAMSHAFT POSITION ACTUATOR CONTROL CIRCUIT HIGH (BANK 2), Diagnostic Procedure with Diagnostic Trouble Code (DTC).>
P2094	Exhaust Camshaft Position Actuator Control Circuit Low (Bank 2)	<Ref. to EN(H4DOTC)(diag)-291, DTC P2094 EXHAUST CAMSHAFT POSITION ACTUATOR CONTROL CIRCUIT LOW (BANK 2), Diagnostic Procedure with Diagnostic Trouble Code (DTC).>
P2095	Exhaust Camshaft Position Actuator Control Circuit High (Bank 2)	<Ref. to EN(H4DOTC)(diag)-293, DTC P2095 EXHAUST CAMSHAFT POSITION ACTUATOR CONTROL CIRCUIT HIGH (BANK 2), Diagnostic Procedure with Diagnostic Trouble Code (DTC).>
P2096	Post Catalyst Fuel Trim System Too Lean (Bank 1)	<Ref. to EN(H4DOTC)(diag)-295, DTC P2096 POST CATALYST FUEL TRIM SYSTEM TOO LEAN (BANK 1), Diagnostic Procedure with Diagnostic Trouble Code (DTC).>
P2097	Post Catalyst Fuel Trim System Too Rich (Bank 1)	<Ref. to EN(H4DOTC)(diag)-302, DTC P2097 POST CATALYST FUEL TRIM SYSTEM TOO RICH (BANK 1), Diagnostic Procedure with Diagnostic Trouble Code (DTC).>
P2101	Throttle Actuator Control Motor Circuit Range/Performance	<Ref. to EN(H4DOTC)(diag)-309, DTC P2101 THROTTLE ACTUATOR CONTROL MOTOR CIRCUIT RANGE/PERFORMANCE, Diagnostic Procedure with Diagnostic Trouble Code (DTC).>
P2102	Throttle Actuator Control Motor Circuit Low	<Ref. to EN(H4DOTC)(diag)-314, DTC P2102 THROTTLE ACTUATOR CONTROL MOTOR CIRCUIT LOW, Diagnostic Procedure with Diagnostic Trouble Code (DTC).>
P2103	Throttle Actuator Control Motor Circuit High	<Ref. to EN(H4DOTC)(diag)-316, DTC P2103 THROTTLE ACTUATOR CONTROL MOTOR CIRCUIT HIGH, Diagnostic Procedure with Diagnostic Trouble Code (DTC).>
P2109	Throttle/Pedal Position Sensor “A” Minimum Stop Performance	<Ref. to EN(H4DOTC)(diag)-317, DTC P2109 THROTTLE/PEDAL POSITION SENSOR “A” MINIMUM STOP PERFORMANCE, Diagnostic Procedure with Diagnostic Trouble Code (DTC).>
P2122	Throttle/Pedal Position Sensor/ Switch “D” Circuit Low Input	<Ref. to EN(H4DOTC)(diag)-318, DTC P2122 THROTTLE/PEDAL POSITION SENSOR/SWITCH “D” CIRCUIT LOW INPUT, Diagnostic Procedure with Diagnostic Trouble Code (DTC).>
P2123	Throttle/Pedal Position Sensor/ Switch “D” Circuit High Input	<Ref. to EN(H4DOTC)(diag)-320, DTC P2123 THROTTLE/PEDAL POSITION SENSOR/SWITCH “D” CIRCUIT HIGH INPUT, Diagnostic Procedure with Diagnostic Trouble Code (DTC).>
P2127	Throttle/Pedal Position Sensor/ Switch “E” Circuit Low Input	<Ref. to EN(H4DOTC)(diag)-322, DTC P2127 THROTTLE/PEDAL POSITION SENSOR/SWITCH “E” CIRCUIT LOW INPUT, Diagnostic Procedure with Diagnostic Trouble Code (DTC).>
P2128	Throttle/Pedal Position Sensor/ Switch “E” Circuit High Input	<Ref. to EN(H4DOTC)(diag)-324, DTC P2128 THROTTLE/PEDAL POSITION SENSOR/SWITCH “E” CIRCUIT HIGH INPUT, Diagnostic Procedure with Diagnostic Trouble Code (DTC).>
P2135	Throttle/Pedal Position Sensor/ Switch “A”/“B” Voltage Correlation	<Ref. to EN(H4DOTC)(diag)-326, DTC P2135 THROTTLE/PEDAL POSITION SENSOR/SWITCH “A”/“B” VOLTAGE CORRELATION, Diagnostic Procedure with Diagnostic Trouble Code (DTC).>

DTC	Item	Index
P2138	Throttle/Pedal Position Sensor/ Switch “D”/“E” Voltage Correlation	<Ref. to EN(H4DOTC)(diag)-329, DTC P2138 THROTTLE/PEDAL POSITION SENSOR/SWITCH “D”/“E” VOLTAGE CORRELATION, Diagnostic Procedure with Diagnostic Trouble Code (DTC).>
P2227	Atmospheric Pressure Sensor Range/Performance	<Ref. to EN(H4SO)(diag)-298, DTC P2227 BAROMETRIC PRESSURE CIRCUIT RANGE/PERFORMANCE, Diagnostic Procedure with Diagnostic Trouble Code (DTC).>
P2228	Barometric Pressure Circuit Low	<Ref. to EN(H4SO)(diag)-298, DTC P2228 BAROMETRIC PRESSURE CIRCUIT LOW, Diagnostic Procedure with Diagnostic Trouble Code (DTC).>
P2229	Barometric Pressure Circuit High	<Ref. to EN(H4SO)(diag)-299, DTC P2229 BAROMETRIC PRESSURE CIRCUIT HIGH, Diagnostic Procedure with Diagnostic Trouble Code (DTC).>
P2419	Evaporative Emission System Switching Valve Control Circuit Low	<Ref. to EN(H4DOTC)(diag)-333, DTC P2419 EVAPORATIVE EMISSION SYSTEM SWITCHING VALVE CONTROL CIRCUIT LOW, Diagnostic Procedure with Diagnostic Trouble Code (DTC).>
P2420	Evaporative Emission System Switching Valve Control Circuit High	<Ref. to EN(H4DOTC)(diag)-335, DTC P2420 EVAPORATIVE EMISSION SYSTEM SWITCHING VALVE CONTROL CIRCUIT HIGH, Diagnostic Procedure with Diagnostic Trouble Code (DTC).>
U0073	CAN Failure, Bus ‘OFF’ Detection	<Ref. to EN(H4DOTC)(diag)-336, DTC U0073 CAN FAILURE, BUS ‘OFF’ DETECTION, Diagnostic Procedure with Diagnostic Trouble Code (DTC).>
U0101	CAN (TCU) Data not Loaded	<Ref. to EN(H4DOTC)(diag)-336, DTC U0101 CAN (TCU) DATA NOT LOADED, Diagnostic Procedure with Diagnostic Trouble Code (DTC).>
U0122	CAN (VDC) Data not Loaded	<Ref. to EN(H4DOTC)(diag)-336, DTC U0122 CAN (VDC) DATA NOT LOADED, Diagnostic Procedure with Diagnostic Trouble Code (DTC).>
U0140	CAN (BCU) Data not Loaded	<Ref. to EN(H4DOTC)(diag)-336, DTC U0140 CAN (BCU) DATA NOT LOADED, Diagnostic Procedure with Diagnostic Trouble Code (DTC).>
U0402	CAN (TCU) Data Abnormal	<Ref. to EN(H4DOTC)(diag)-336, DTC U0402 CAN (TCU) DATA ABNORMAL, Diagnostic Procedure with Diagnostic Trouble Code (DTC).>
U0416	CAN (VDC) Data Abnormal	<Ref. to EN(H4DOTC)(diag)-336, DTC U0416 CAN (VDC) DATA ABNORMAL, Diagnostic Procedure with Diagnostic Trouble Code (DTC).>
U0422	CAN (BCU) Data Abnormal	<Ref. to EN(H4DOTC)(diag)-336, DTC U0422 CAN (BCU) DATA ABNORMAL, Diagnostic Procedure with Diagnostic Trouble Code (DTC).>

18. Diagnostic Procedure with Diagnostic Trouble Code (DTC)

A: DTC P0011 INTAKE CAMSHAFT POSITION - TIMING OVER-ADVANCED OR SYSTEM PERFORMANCE (BANK 1)

DTC DETECTING CONDITION:

- Detected when two consecutive driving cycles with fault occur.
- GENERAL DESCRIPTION <Ref. to GD(H4DOTC)-10, DTC P0011 INTAKE CAMSHAFT POSITION - TIMING OVER-ADVANCED OR SYSTEM PERFORMANCE (BANK 1), Diagnostic Trouble Code (DTC) Detecting Criteria.>

TROUBLE SYMPTOM:

- Engine stalls.
- Improper idling

CAUTION:

After servicing or replacing faulty parts, perform Clear Memory Mode <Ref. to EN(H4DOTC)(diag)-55, OPERATION, Clear Memory Mode.>, and Inspection Mode <Ref. to EN(H4DOTC)(diag)-44, PROCEDURE, Inspection Mode.>.

	Step	Check	Yes	No
1	**CHECK CURRENT DATA.** 1) Start the engine and let it idle. 2) Check the AVCS system operating angle using Subaru Select Monitor or general scan tool. NOTE: • Subaru Select Monitor For detailed operation procedures, refer to "READ CURRENT DATA FOR ENGINE". <Ref. to EN(H4DOTC)(diag)-37, Subaru Select Monitor.> • General scan tool For detailed operation procedures, refer to the general scan tool operation manual.	Is the AVCS system operating angle approximately 0°?	Go to step **2**.	Check the following item and repair or replace if necessary. • Oil pipe (clog) • Oil flow control solenoid valve (clog or dirt of oil routing, setting of spring) • Intake camshaft (dirt, damage of camshaft)
2	**CHECK CURRENT DATA.** 1) Drive with acceleration and deceleration at 80 km/h (50 MPH) or less. NOTE: Drive to an extent that the duty output of oil flow control solenoid valve increases. 2) Measure the AVCS system operating angle and oil flow control solenoid valve duty output using Subaru Select Monitor or general scan tool. NOTE: • Subaru Select Monitor For detailed operation procedures, refer to "READ CURRENT DATA FOR ENGINE". <Ref. to EN(H4DOTC)(diag)-37, Subaru Select Monitor.> • General scan tool For detailed operation procedures, refer to the general scan tool operation manual.	When the oil flow control solenoid valve duty output exceeds 10%, is the AVCS system operating angle approx. 0°?	Check the following item and repair or replace if necessary. • Oil pipe (clog) • Oil flow control solenoid valve (clog or dirt of oil routing, setting of spring) • Intake camshaft (dirt, damage of camshaft)	Perform the following procedures, and clean the oil routing. Replace the engine oil and idle the engine for 5 minutes, and then replace the oil filter and engine oil. <Ref. to LU(H4SO)-12, REPLACEMENT, Engine Oil.> <Ref. to LU(H4SO)-34, Engine Oil Filter.>

B: DTC P0014 EXHAUST AVCS SYSTEM 1 (RANGE/PERFORMANCE)

DTC DETECTING CONDITION:

- Detected when two consecutive driving cycles with fault occur.
- GENERAL DESCRIPTION <Ref. to GD(H4DOTC)-12, DTC P0014 EXHAUST AVCS SYSTEM 1 (RANGE/PERFORMANCE), Diagnostic Trouble Code (DTC) Detecting Criteria.>

TROUBLE SYMPTOM:

- Engine stalls.
- Improper idling

CAUTION:

After servicing or replacing faulty parts, perform Clear Memory Mode <Ref. to EN(H4DOTC)(diag)-55, OPERATION, Clear Memory Mode.>, and Inspection Mode <Ref. to EN(H4DOTC)(diag)-44, PROCEDURE, Inspection Mode.>.

	Step	Check	Yes	No
1	**CHECK CURRENT DATA.** 1) Start the engine and let it idle. 2) Check the exhaust AVCS system operating angle using Subaru Select Monitor or general scan tool. NOTE: • Subaru Select Monitor For detailed operation procedures, refer to "READ CURRENT DATA FOR ENGINE". <Ref. to EN(H4DOTC)(diag)-37, Subaru Select Monitor.> • General scan tool For detailed operation procedures, refer to the general scan tool operation manual.	Is the exhaust AVCS system operating angle approximately 0°?	Go to step **2**.	Check the following item and repair or replace if necessary. • Oil pipe (clog) • Oil flow control solenoid valve (clog or dirt of oil routing, setting of spring) • Exhaust camshaft (dirt, damage of camshaft)
2	**CHECK CURRENT DATA.** 1) Drive with acceleration and deceleration at 80 km/h (50 MPH) or less. NOTE: Drive to an extent that the duty output of oil flow control solenoid valve increases. 2) Measure the exhaust AVCS system operating angle and oil flow control solenoid valve duty output using Subaru Select Monitor or general scan tool. NOTE: • Subaru Select Monitor For detailed operation procedures, refer to "READ CURRENT DATA FOR ENGINE". <Ref. to EN(H4DOTC)(diag)-37, Subaru Select Monitor.> • General scan tool For detailed operation procedures, refer to the general scan tool operation manual.	When the oil flow control solenoid valve duty output exceeds 10%, is the exhaust AVCS system operating angle approx. 0°?	Check the following item and repair or replace if necessary. • Oil pipe (clog) • Oil flow control solenoid valve (clog or dirt of oil routing, setting of spring) • Exhaust camshaft (dirt, damage of camshaft)	Perform the following procedures, and clean the oil routing. Replace the engine oil and idle the engine for 5 minutes, and then replace the oil filter and engine oil. <Ref. to LU(H4SO)-12, REPLACEMENT, Engine Oil.> <Ref. to LU(H4SO)-34, Engine Oil Filter.>

C: DTC P0016 CRANKSHAFT POSITION - CAMSHAFT POSITION CORRELATION (BANK1)

DTC DETECTING CONDITION:

- Detected when two consecutive driving cycles with fault occur.
- GENERAL DESCRIPTION <Ref. to GD(H4DOTC)-14, DTC P0016 CRANKSHAFT POSITION - CAMSHAFT POSITION CORRELATION (BANK1), Diagnostic Trouble Code (DTC) Detecting Criteria.>

TROUBLE SYMPTOM:

- Engine stalls.
- Improper idling

CAUTION:

After servicing or replacing faulty parts, perform Clear Memory Mode <Ref. to EN(H4DOTC)(diag)-55, OPERATION, Clear Memory Mode.>, and Inspection Mode <Ref. to EN(H4DOTC)(diag)-44, PROCEDURE, Inspection Mode.>.

	Step	Check	Yes	No
1	**CHECK CURRENT DATA.** 1) Start the engine and let it idle. 2) Measure the AVCS system operating angle and oil flow control solenoid valve duty output using Subaru Select Monitor or general scan tool. NOTE: • Subaru Select Monitor For detailed operation procedures, refer to "READ CURRENT DATA FOR ENGINE". <Ref. to EN(H4DOTC)(diag)-37, Subaru Select Monitor.> • General scan tool For detailed operation procedures, refer to the general scan tool operation manual.	Is the AVCS system operating angle approx. 0°, and oil flow control solenoid valve duty output approx. 10%?	Perform the following procedures, and clean the oil routing. Replace the engine oil and idle the engine for 5 minutes, and then replace the oil filter and engine oil. <Ref. to LU(H4SO)-12, REPLACEMENT, Engine Oil.> <Ref. to LU(H4SO)-34, Engine Oil Filter.>	Check the following item and repair or replace if necessary. • Oil pipe (clog) • Oil flow control solenoid valve (clog or dirt of oil routing, setting of spring) • Intake camshaft (dirt, damage of camshaft) • Timing belt (matching of timing mark)

D: DTC P0017 CRANK AND CAM TIMING B SYSTEM FAILURE (BANK 1)

DTC DETECTING CONDITION:

- Detected when two consecutive driving cycles with fault occur.
- GENERAL DESCRIPTION <Ref. to GD(H4DOTC)-16, DTC P0017 CRANK AND CAM TIMING B SYSTEM FAILURE (BANK 1), Diagnostic Trouble Code (DTC) Detecting Criteria.>

TROUBLE SYMPTOM:

- Engine stalls.
- Improper idling

CAUTION:

After servicing or replacing faulty parts, perform Clear Memory Mode <Ref. to EN(H4DOTC)(diag)-55, OPERATION, Clear Memory Mode.>, and Inspection Mode <Ref. to EN(H4DOTC)(diag)-44, PROCEDURE, Inspection Mode.>.

	Step	Check	Yes	No
1	**CHECK CURRENT DATA.** 1) Start the engine and let it idle. 2) Measure the exhaust AVCS system operating angle and oil flow control solenoid valve duty output using Subaru Select Monitor or general scan tool. NOTE: • Subaru Select Monitor For detailed operation procedures, refer to "READ CURRENT DATA FOR ENGINE". <Ref. to EN(H4DOTC)(diag)-37, Subaru Select Monitor.> • General scan tool For detailed operation procedures, refer to the general scan tool operation manual.	Is the exhaust AVCS system operating angle approx. 0°, and oil flow control solenoid valve duty output approx. 10%?	Perform the following procedures, and clean the oil routing. Replace the engine oil and idle the engine for 5 minutes, and then replace the oil filter and engine oil. <Ref. to LU(H4SO)-12, REPLACEMENT, Engine Oil.> <Ref. to LU(H4SO)-34, Engine Oil Filter.>	Check the following item and repair or replace if necessary. • Oil pipe (clog) • Oil flow control solenoid valve (clog or dirt of oil routing, setting of spring) • Exhaust camshaft (dirt, damage of camshaft) • Timing belt (matching of timing mark)

E: DTC P0018 CRANKSHAFT POSITION - CAMSHAFT POSITION CORRELATION (BANK2)

DTC DETECTING CONDITION:

- Detected when two consecutive driving cycles with fault occur.
- GENERAL DESCRIPTION <Ref. to GD(H4DOTC)-18, DTC P0018 CRANKSHAFT POSITION - CAMSHAFT POSITION CORRELATION (BANK2), Diagnostic Trouble Code (DTC) Detecting Criteria.>

TROUBLE SYMPTOM:

- Engine stalls.
- Improper idling

CAUTION:

After servicing or replacing faulty parts, perform Clear Memory Mode <Ref. to EN(H4DOTC)(diag)-55, OPERATION, Clear Memory Mode.>, and Inspection Mode <Ref. to EN(H4DOTC)(diag)-44, PROCEDURE, Inspection Mode.>.

	Step	Check	Yes	No
1	**CHECK CURRENT DATA.** 1) Start the engine and let it idle. 2) Measure the AVCS system operating angle and oil flow control solenoid valve duty output using Subaru Select Monitor or general scan tool. NOTE: • Subaru Select Monitor For detailed operation procedures, refer to "READ CURRENT DATA FOR ENGINE". <Ref. to EN(H4DOTC)(diag)-37, Subaru Select Monitor.> • General scan tool For detailed operation procedures, refer to the general scan tool operation manual.	Is the AVCS system operating angle approx. 0°, and oil flow control solenoid valve duty output approx. 10%?	Perform the following procedures, and clean the oil routing. Replace the engine oil and idle the engine for 5 minutes, and then replace the oil filter and engine oil. <Ref. to LU(H4SO)-12, REPLACEMENT, Engine Oil.> <Ref. to LU(H4SO)-34, Engine Oil Filter.>	Check the following item and repair or replace if necessary. • Oil pipe (clog) • Oil flow control solenoid valve (clog or dirt of oil routing, setting of spring) • Intake camshaft (dirt, damage of camshaft) • Timing belt (matching of timing mark)

F: DTC P0019 CRANK AND CAM TIMING B SYSTEM FAILURE (BANK 2)

DTC DETECTING CONDITION:

- Detected when two consecutive driving cycles with fault occur.
- GENERAL DESCRIPTION <Ref. to GD(H4DOTC)-18, DTC P0019 CRANK AND CAM TIMING B SYSTEM FAILURE (BANK 2), Diagnostic Trouble Code (DTC) Detecting Criteria.>

TROUBLE SYMPTOM:

- Engine stalls.
- Improper idling

CAUTION:

After servicing or replacing faulty parts, perform Clear Memory Mode <Ref. to EN(H4DOTC)(diag)-55, OPERATION, Clear Memory Mode.>, and Inspection Mode <Ref. to EN(H4DOTC)(diag)-44, PROCEDURE, Inspection Mode.>.

	Step	Check	Yes	No
1	**CHECK CURRENT DATA.** 1) Start the engine and let it idle. 2) Measure the exhaust AVCS system operating angle and oil flow control solenoid valve duty output using Subaru Select Monitor or general scan tool. NOTE: • Subaru Select Monitor For detailed operation procedures, refer to "READ CURRENT DATA FOR ENGINE". <Ref. to EN(H4DOTC)(diag)-37, Subaru Select Monitor.> • General scan tool For detailed operation procedures, refer to the general scan tool operation manual.	Is the exhaust AVCS system operating angle approx. 0°, and oil flow control solenoid valve duty output approx. 10%?	Perform the following procedures, and clean the oil routing. Replace the engine oil and idle the engine for 5 minutes, and then replace the oil filter and engine oil. <Ref. to LU(H4SO)-12, REPLACEMENT, Engine Oil.> <Ref. to LU(H4SO)-34, Engine Oil Filter.>	Check the following item and repair or replace if necessary. • Oil pipe (clog) • Oil flow control solenoid valve (clog or dirt of oil routing, setting of spring) • Exhaust camshaft (dirt, damage of camshaft) • Timing belt (matching of timing mark)

G: DTC P0021 INTAKE CAMSHAFT POSITION - TIMING OVER-ADVANCED OR SYSTEM PERFORMANCE (BANK 2)

DTC DETECTING CONDITION:

- Detected when two consecutive driving cycles with fault occur.
- GENERAL DESCRIPTION <Ref. to GD(H4DOTC)-18, DTC P0021 INTAKE CAMSHAFT POSITION - TIMING OVER-ADVANCED OR SYSTEM PERFORMANCE (BANK 2), Diagnostic Trouble Code (DTC) Detecting Criteria.>

TROUBLE SYMPTOM:

- Engine stalls.
- Improper idling

CAUTION:

After servicing or replacing faulty parts, perform Clear Memory Mode <Ref. to EN(H4DOTC)(diag)-55, OPERATION, Clear Memory Mode.>, and Inspection Mode <Ref. to EN(H4DOTC)(diag)-44, PROCEDURE, Inspection Mode.>.

	Step	Check	Yes	No
1	**CHECK CURRENT DATA.** 1) Start the engine and let it idle. 2) Check the AVCS system operating angle using Subaru Select Monitor or general scan tool. NOTE: • Subaru Select Monitor For detailed operation procedures, refer to "READ CURRENT DATA FOR ENGINE". <Ref. to EN(H4DOTC)(diag)-37, Subaru Select Monitor.> • General scan tool For detailed operation procedures, refer to the general scan tool operation manual.	Is the AVCS system operating angle approximately 0°?	Go to step **2**.	Check the following item and repair or replace if necessary. • Oil pipe (clog) • Oil flow control solenoid valve (clog or dirt of oil routing, setting of spring) • Intake camshaft (dirt, damage of camshaft)
2	**CHECK CURRENT DATA.** 1) Drive with acceleration and deceleration at 80 km/h (50 MPH) or less. NOTE: Drive to an extent that the duty output of oil flow control solenoid valve increases. 2) Measure the AVCS system operating angle and oil flow control solenoid valve duty output using Subaru Select Monitor or general scan tool. NOTE: • Subaru Select Monitor For detailed operation procedures, refer to "READ CURRENT DATA FOR ENGINE". <Ref. to EN(H4DOTC)(diag)-37, Subaru Select Monitor.> • General scan tool For detailed operation procedures, refer to the general scan tool operation manual.	When the oil flow control solenoid valve duty output exceeds 10%, is the AVCS system operating angle approx. 0°?	Check the following item and repair or replace if necessary. • Oil pipe (clog) • Oil flow control solenoid valve (clog or dirt of oil routing, setting of spring) • Intake camshaft (dirt, damage of camshaft)	Perform the following procedures, and clean the oil routing. Replace the engine oil and idle the engine for 5 minutes, and then replace the oil filter and engine oil. <Ref. to LU(H4SO)-12, REPLACEMENT, Engine Oil.> <Ref. to LU(H4SO)-34, Engine Oil Filter.>

H: DTC P0024 EXHAUST AVCS SYSTEM 2 (RANGE/PERFORMANCE)

DTC DETECTING CONDITION:

- Detected when two consecutive driving cycles with fault occur.
- GENERAL DESCRIPTION <Ref. to GD(H4DOTC)-18, DTC P0024 EXHAUST AVCS SYSTEM 2 (RANGE/PERFORMANCE), Diagnostic Trouble Code (DTC) Detecting Criteria.>

TROUBLE SYMPTOM:

- Engine stalls.
- Improper idling

CAUTION:

After servicing or replacing faulty parts, perform Clear Memory Mode <Ref. to EN(H4DOTC)(diag)-55, OPERATION, Clear Memory Mode.>, and Inspection Mode <Ref. to EN(H4DOTC)(diag)-44, PROCEDURE, Inspection Mode.>.

	Step	Check	Yes	No
1	**CHECK CURRENT DATA.** 1) Start the engine and let it idle. 2) Check the exhaust AVCS system operating angle using Subaru Select Monitor or general scan tool. NOTE: • Subaru Select Monitor For detailed operation procedures, refer to "READ CURRENT DATA FOR ENGINE". <Ref. to EN(H4DOTC)(diag)-37, Subaru Select Monitor.> • General scan tool For detailed operation procedures, refer to the general scan tool operation manual.	Is the exhaust AVCS system operating angle approximately 0°?	Go to step **2**.	Check the following item and repair or replace if necessary. • Oil pipe (clog) • Oil flow control solenoid valve (clog or dirt of oil routing, setting of spring) • Exhaust camshaft (dirt, damage of camshaft)
2	**CHECK CURRENT DATA.** 1) Drive with acceleration and deceleration at 80 km/h (50 MPH) or less. NOTE: Drive to an extent that the duty output of oil flow control solenoid valve increases. 2) Measure the exhaust AVCS system operating angle and oil flow control solenoid valve duty output using Subaru Select Monitor or general scan tool. NOTE: • Subaru Select Monitor For detailed operation procedures, refer to "READ CURRENT DATA FOR ENGINE". <Ref. to EN(H4DOTC)(diag)-37, Subaru Select Monitor.> • General scan tool For detailed operation procedures, refer to the general scan tool operation manual.	When the oil flow control solenoid valve duty output exceeds 10%, is the exhaust AVCS system operating angle approx. 0°?	Check the following item and repair or replace if necessary. • Oil pipe (clog) • Oil flow control solenoid valve (clog or dirt of oil routing, setting of spring) • Exhaust camshaft (dirt, damage of camshaft)	Perform the following procedures, and clean the oil routing. Replace the engine oil and idle the engine for 5 minutes, and then replace the oil filter and engine oil. <Ref. to LU(H4SO)-12, REPLACEMENT, Engine Oil.> <Ref. to LU(H4SO)-34, Engine Oil Filter.>

I: DTC P0030 HO2S HEATER CONTROL CIRCUIT (BANK 1 SENSOR 1)

DTC DETECTING CONDITION:

- Detected when two consecutive driving cycles with fault occur.
- GENERAL DESCRIPTION <Ref. to GD(H4DOTC)-19, DTC P0030 HO2S HEATER CONTROL CIRCUIT (BANK 1 SENSOR 1), Diagnostic Trouble Code (DTC) Detecting Criteria.>

CAUTION:

After servicing or replacing faulty parts, perform Clear Memory Mode <Ref. to EN(H4DOTC)(diag)-55, OPERATION, Clear Memory Mode.>, and Inspection Mode <Ref. to EN(H4DOTC)(diag)-44, PROCEDURE, Inspection Mode.>.

WIRING DIAGRAM:

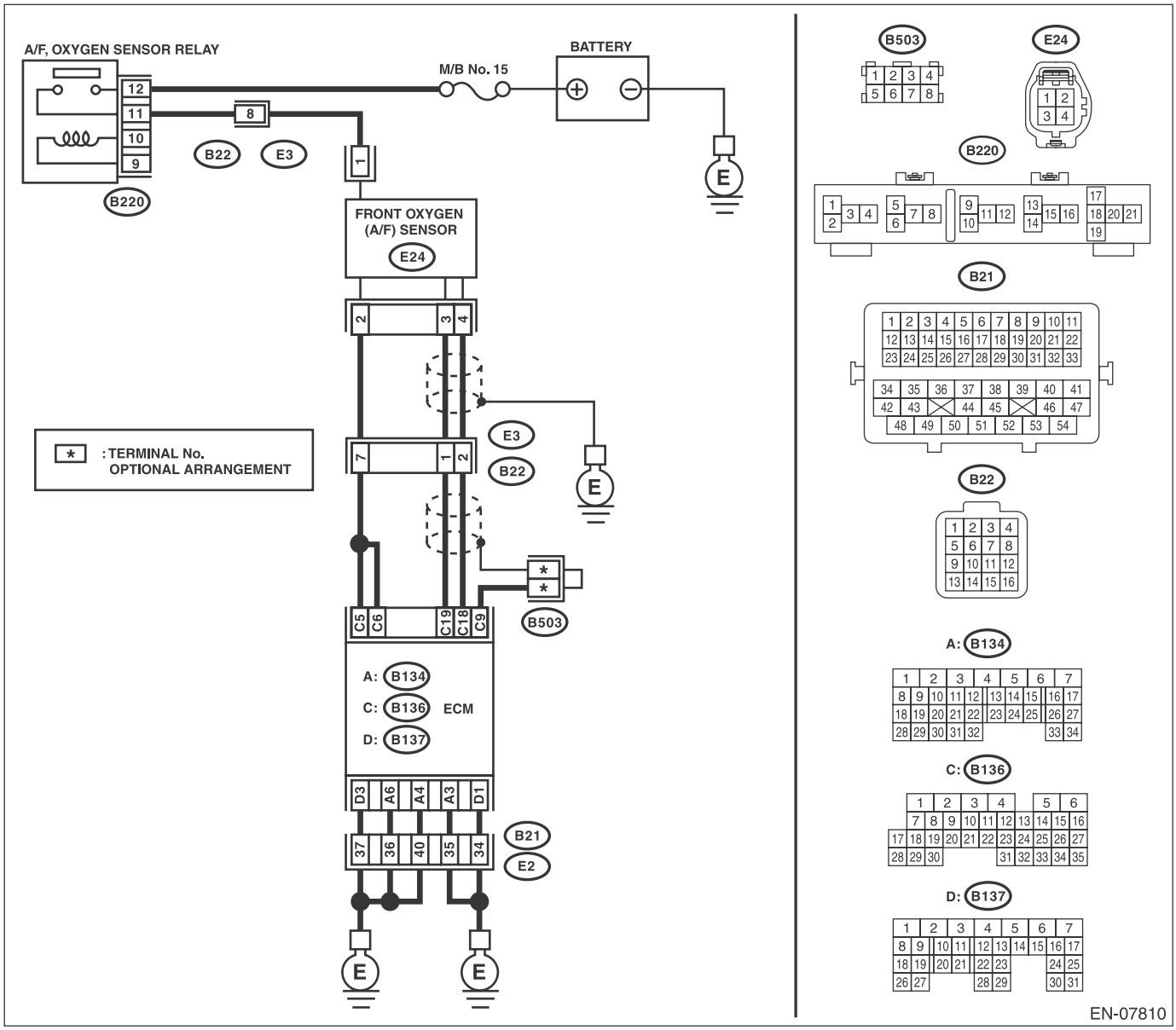

	Step	Check	Yes	No
1	**CHECK HARNESS BETWEEN ECM AND FRONT OXYGEN (A/F) SENSOR CONNECTOR.** 1) Start and warm up the engine. 2) Turn the ignition switch to OFF. 3) Disconnect the connectors from ECM and front oxygen (A/F) sensor. 4) Measure the resistance of harness between ECM and front oxygen (A/F) sensor connector. ***Connector & terminal*** ***(B136) No. 5 — (E24) No. 2:*** ***(B136) No. 6 — (E24) No. 2:*** ***(B136) No. 19 — (E24) No. 3:*** ***(B136) No. 18 — (E24) No. 4:***	Is the resistance less than 1 Ω?	Go to step **2**.	Repair the harness and connector. NOTE: In this case, repair the following item: • Open circuit in harness between ECM and front oxygen (A/F) sensor connector • Poor contact of coupling connector
2	**CHECK FRONT OXYGEN (A/F) SENSOR.** Measure the resistance between front oxygen (A/F) sensor connector terminals. ***Terminals*** ***No. 1 — No. 2:***	Is the resistance less than 2 — 3 Ω?	Go to step **3**.	Replace the front oxygen (A/F) sensor. <Ref. to FU(H4DOTC)-53, Front Oxygen (A/F) Sensor.>
3	**CHECK FOR POOR CONTACT.** Check for poor contact of ECM and front oxygen (A/F) sensor connector.	Is there poor contact of ECM or front oxygen (A/F) sensor connector?	Repair the poor contact of ECM or front oxygen (A/F) sensor connector.	Replace the front oxygen (A/F) sensor. <Ref. to FU(H4DOTC)-53, Front Oxygen (A/F) Sensor.>

J: DTC P0031 HO2S HEATER CONTROL CIRCUIT LOW (BANK 1 SENSOR 1)

DTC DETECTING CONDITION:

- Immediately at fault recognition
- GENERAL DESCRIPTION <Ref. to GD(H4DOTC)-21, DTC P0031 HO2S HEATER CONTROL CIRCUIT LOW (BANK 1 SENSOR 1), Diagnostic Trouble Code (DTC) Detecting Criteria.>

CAUTION:

After servicing or replacing faulty parts, perform Clear Memory Mode <Ref. to EN(H4DOTC)(diag)-55, OPERATION, Clear Memory Mode.>, and Inspection Mode <Ref. to EN(H4DOTC)(diag)-44, PROCEDURE, Inspection Mode.>.

WIRING DIAGRAM:

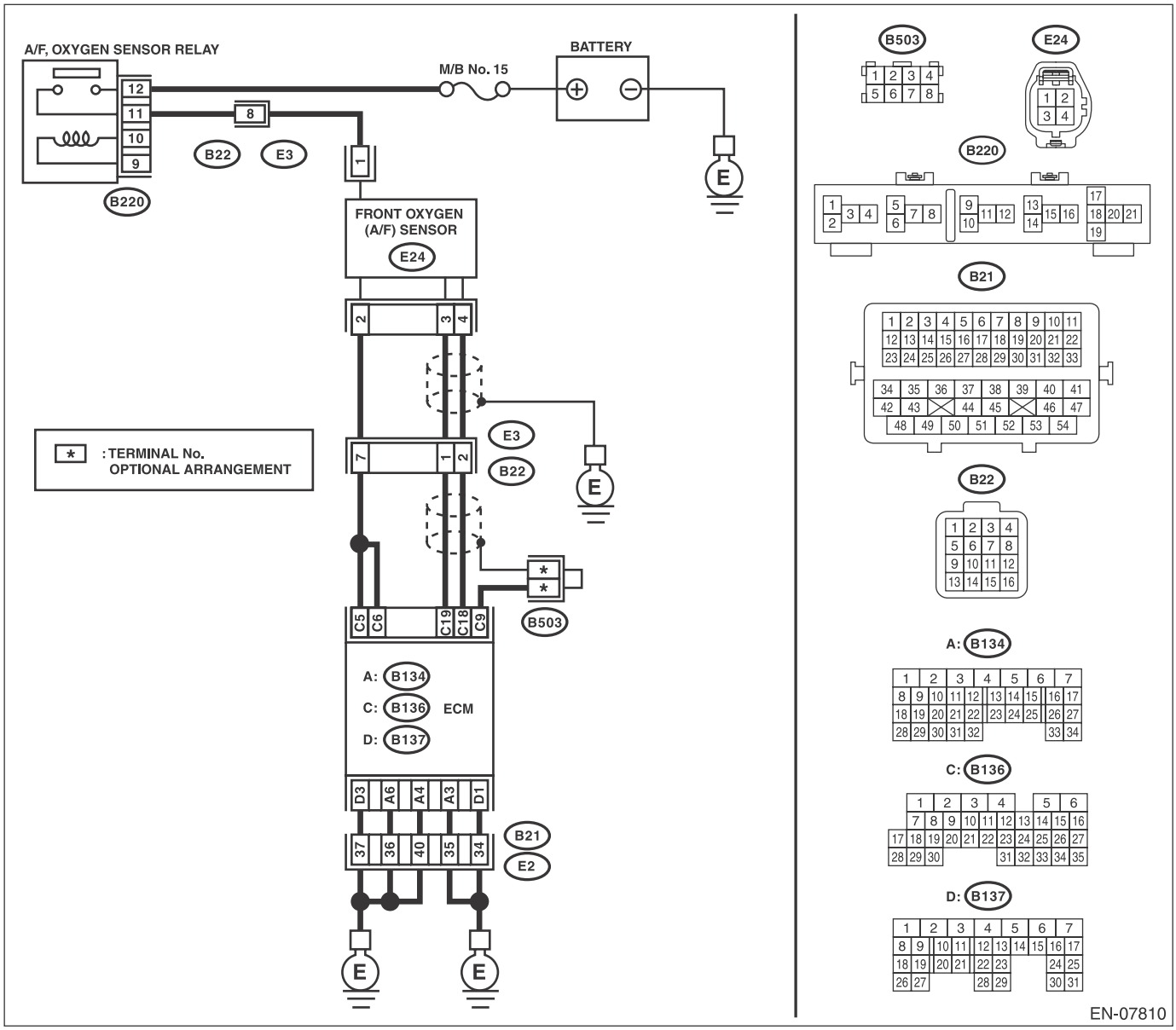

	Step	Check	Yes	No
1	**CHECK POWER SUPPLY TO FRONT OXYGEN (A/F) SENSOR.** 1) Turn the ignition switch to OFF. 2) Disconnect the connector from front oxygen (A/F) sensor. 3) Turn the ignition switch to ON. 4) Measure the voltage between front oxygen (A/F) sensor connector and engine ground. ***Connector & terminal*** ***(E24) No. 1 (+) — Engine ground (–):***	Is the voltage 10 V or more?	Go to step **2**.	Repair the power supply line. NOTE: In this case, repair the following item: • Open circuit in harness between A/F, oxygen sensor relay and front oxygen (A/F) sensor connector • Poor contact of A/F, oxygen sensor relay connector • Poor contact of coupling connector • Fault of A/F, oxygen sensor relay
2	**CHECK HARNESS BETWEEN ECM AND FRONT OXYGEN (A/F) SENSOR CONNECTOR.** 1) Turn the ignition switch to OFF. 2) Disconnect the connector from ECM. 3) Measure the resistance between ECM and front oxygen (A/F) sensor connector. ***Connector & terminal*** ***(B136) No. 5 — (E24) No. 2:*** ***(B136) No. 6 — (E24) No. 2:***	Is the resistance less than 1 Ω?	Go to step **3**.	Repair the harness and connector. NOTE: In this case, repair the following item: • Open circuit in harness between ECM and front oxygen (A/F) sensor connector • Poor contact of coupling connector
3	**CHECK GROUND CIRCUIT FOR ECM.** Measure the resistance of harness between ECM and chassis ground. ***Connector & terminal*** ***(B134) No. 3 — Chassis ground:*** ***(B134) No. 4 — Chassis ground:*** ***(B134) No. 6 — Chassis ground:*** ***(B137) No. 1 — Chassis ground:*** ***(B137) No. 3 — Chassis ground:***	Is the resistance less than 5 Ω?	Go to step **4**.	Repair the harness and connector. NOTE: In this case, repair the following item: • Open circuit of harness between ECM and engine ground • Poor contact of ECM connector • Poor contact of coupling connector
4	**CHECK FRONT OXYGEN (A/F) SENSOR.** Measure the resistance between front oxygen (A/F) sensor terminals. ***Terminals*** ***No. 1 — No. 2:***	Is the resistance 2 — 3 Ω?	Repair the poor contact of ECM connector.	Replace the front oxygen (A/F) sensor. <Ref. to FU(H4DOTC)-53, Front Oxygen (A/F) Sensor.>

K: DTC P0032 HO2S HEATER CONTROL CIRCUIT HIGH (BANK 1 SENSOR 1)

DTC DETECTING CONDITION:

- Immediately at fault recognition
- GENERAL DESCRIPTION <Ref. to GD(H4DOTC)-23, DTC P0032 HO2S HEATER CONTROL CIRCUIT HIGH (BANK 1 SENSOR 1), Diagnostic Trouble Code (DTC) Detecting Criteria.>

CAUTION:

After servicing or replacing faulty parts, perform Clear Memory Mode <Ref. to EN(H4DOTC)(diag)-55, OPERATION, Clear Memory Mode.>, and Inspection Mode <Ref. to EN(H4DOTC)(diag)-44, PROCEDURE, Inspection Mode.>.

WIRING DIAGRAM:

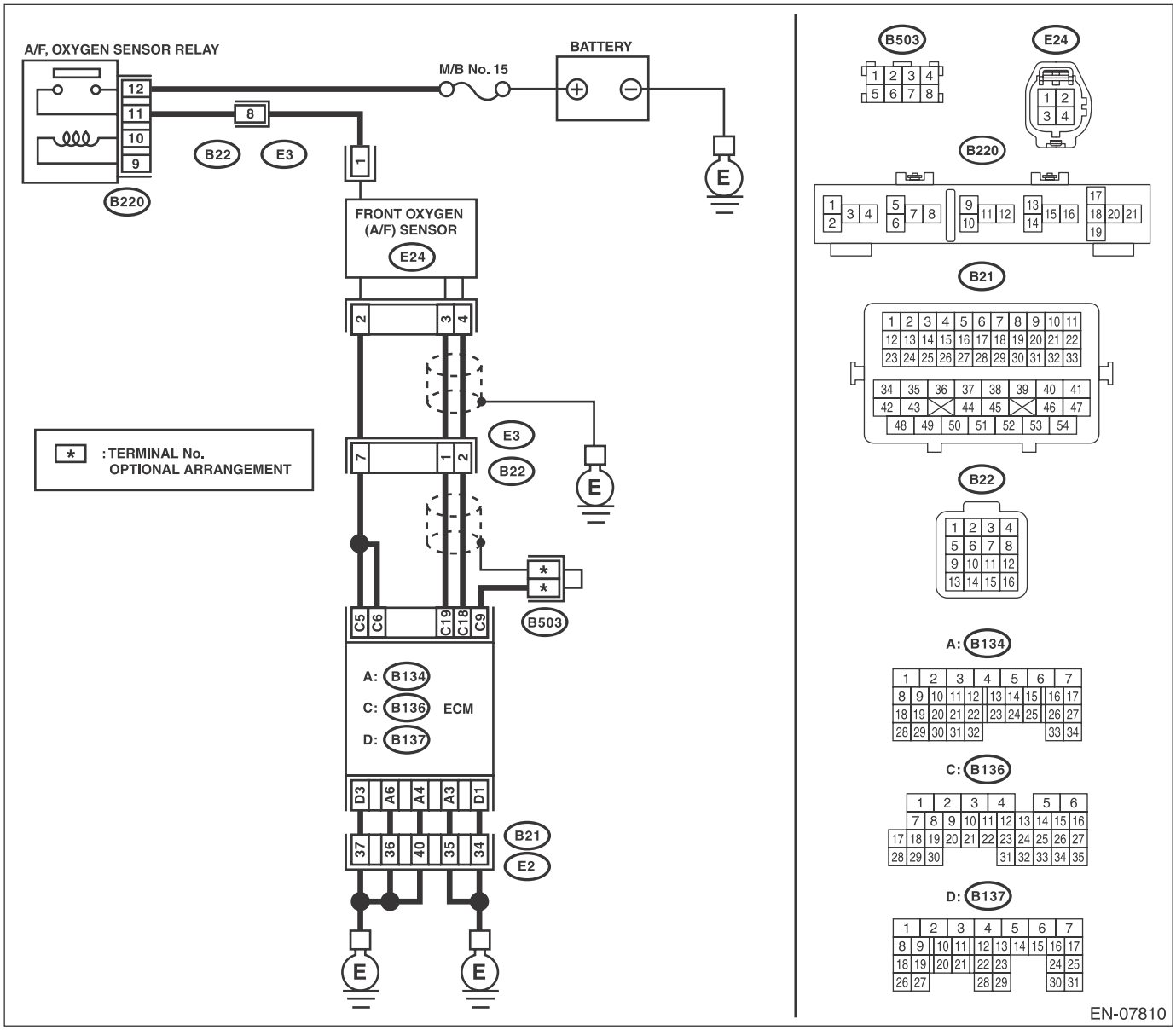

	Step	Check	Yes	No
1	**CHECK HARNESS BETWEEN ECM AND FRONT OXYGEN (A/F) SENSOR CONNECTOR.** 1) Turn the ignition switch to OFF. 2) Measure the voltage between ECM and chassis ground. ***Connector & terminal*** ***(B136) No. 5 (+) — Chassis ground (–):*** ***(B136) No. 6 (+) — Chassis ground (–):***	Is the voltage 10 V or more?	Repair the short circuit of harness to power supply between ECM and front oxygen (A/F) sensor connector.	Go to step **2**.
2	**CHECK GROUND CIRCUIT FOR ECM.** 1) Disconnect the connector from ECM. 2) Measure the resistance between ECM and chassis ground. ***Connector & terminal*** ***(B134) No. 3 — Chassis ground:*** ***(B134) No. 4 — Chassis ground:*** ***(B134) No. 6 — Chassis ground:*** ***(B137) No. 1 — Chassis ground:*** ***(B137) No. 3 — Chassis ground:***	Is the resistance less than 5 Ω?	Repair the poor contact of ECM connector.	Repair the harness and connector. NOTE: In this case, repair the following item: • Open circuit of harness between ECM and engine ground • Poor contact of coupling connector

L: DTC P0037 HO2S HEATER CONTROL CIRCUIT LOW (BANK 1 SENSOR 2)

DTC DETECTING CONDITION:

- Detected when two consecutive driving cycles with fault occur.
- GENERAL DESCRIPTION <Ref. to GD(H4DOTC)-25, DTC P0037 HO2S HEATER CONTROL CIRCUIT LOW (BANK 1 SENSOR 2), Diagnostic Trouble Code (DTC) Detecting Criteria.>

CAUTION:

After servicing or replacing faulty parts, perform Clear Memory Mode <Ref. to EN(H4DOTC)(diag)-55, OPERATION, Clear Memory Mode.>, and Inspection Mode <Ref. to EN(H4DOTC)(diag)-44, PROCEDURE, Inspection Mode.>.

WIRING DIAGRAM:

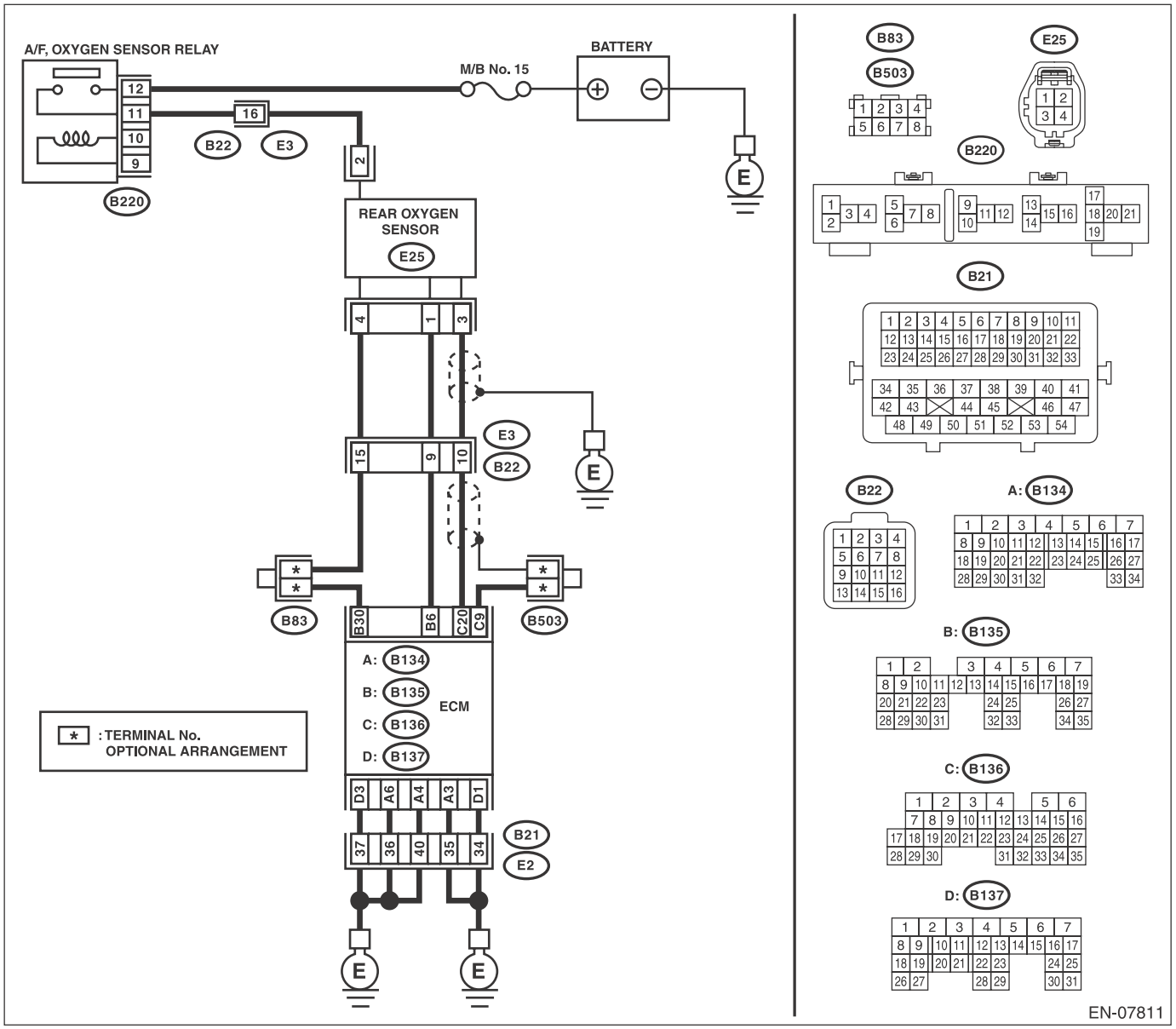

	Step	Check	Yes	No
1	**CHECK POWER SUPPLY TO REAR OXYGEN SENSOR.** 1) Turn the ignition switch to OFF. 2) Disconnect the connector from rear oxygen sensor. 3) Turn the ignition switch to ON. 4) Measure the voltage between rear oxygen sensor connector and engine ground. ***Connector & terminal*** ***(E25) No. 2 (+) — Engine ground (–):***	Is the voltage 10 V or more?	Go to step **2**.	Repair the power supply line. NOTE: In this case, repair the following item: • Open circuit in harness between A/F, oxygen sensor relay and rear oxygen sensor connector • Poor contact of A/F, oxygen sensor relay connector • Poor contact of coupling connector • Fault of A/F, oxygen sensor relay
2	**CHECK HARNESS BETWEEN ECM AND REAR OXYGEN SENSOR CONNECTOR.** 1) Turn the ignition switch to OFF. 2) Disconnect the connector from ECM. 3) Measure the resistance between ECM and rear oxygen sensor connector. ***Connector & terminal*** ***(B135) No. 6 — (E25) No. 1:***	Is the resistance less than 1 Ω?	Go to step **3**.	Repair the harness and connector. NOTE: In this case, repair the following item: • Open circuit in harness between ECM and rear oxygen sensor connector • Poor contact of coupling connector
3	**CHECK GROUND CIRCUIT FOR ECM.** Measure the resistance of harness between ECM and chassis ground. ***Connector & terminal*** ***(B134) No. 3 — Chassis ground:*** ***(B134) No. 4 — Chassis ground:*** ***(B134) No. 6 — Chassis ground:*** ***(B137) No. 1 — Chassis ground:*** ***(B137) No. 3 — Chassis ground:***	Is the resistance less than 5 Ω?	Go to step **4**.	Repair the harness and connector. NOTE: In this case, repair the following item: • Open circuit of harness between ECM and engine ground • Poor contact of ECM connector • Poor contact of coupling connector
4	**CHECK REAR OXYGEN SENSOR.** Measure the resistance between rear oxygen sensor terminals. ***Terminals*** ***No. 1 — No. 2:***	Is the resistance 5 — 7 Ω?	Repair the poor contact of ECM connector.	Replace the rear oxygen sensor. <Ref. to FU(H4DOTC)-55, Rear Oxygen Sensor.>

M: DTC P0038 HO2S HEATER CONTROL CIRCUIT HIGH (BANK 1 SENSOR 2)

DTC DETECTING CONDITION:

- Detected when two consecutive driving cycles with fault occur.
- GENERAL DESCRIPTION <Ref. to GD(H4DOTC)-27, DTC P0038 HO2S HEATER CONTROL CIRCUIT HIGH (BANK 1 SENSOR 2), Diagnostic Trouble Code (DTC) Detecting Criteria.>

CAUTION:
After servicing or replacing faulty parts, perform Clear Memory Mode <Ref. to EN(H4DOTC)(diag)-55, OPERATION, Clear Memory Mode.>, and Inspection Mode <Ref. to EN(H4DOTC)(diag)-44, PROCEDURE, Inspection Mode.>.

WIRING DIAGRAM:

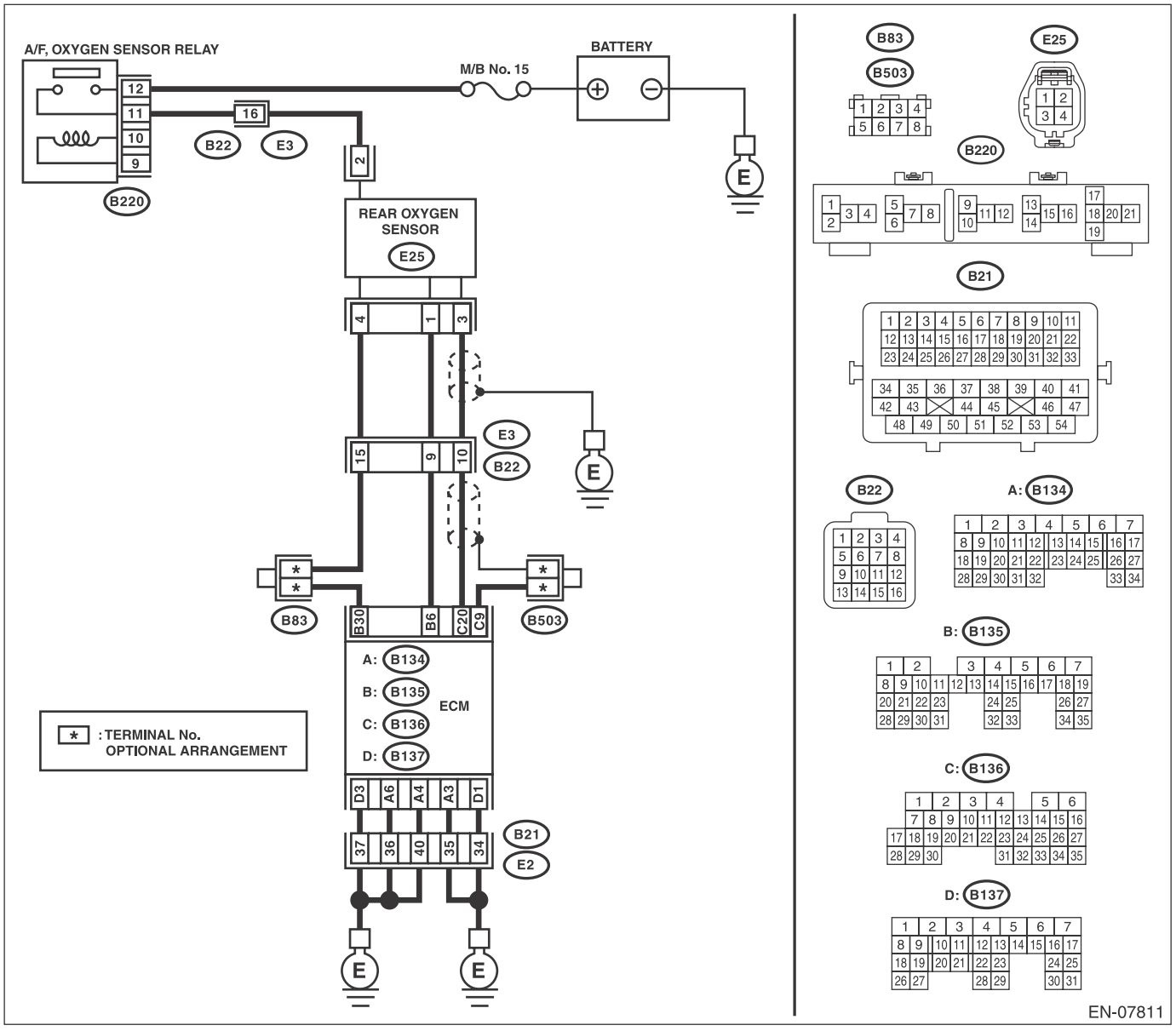

Step		Check	Yes	No
1	**CHECK HARNESS BETWEEN ECM AND REAR OXYGEN SENSOR CONNECTOR.** 1) Turn the ignition switch to OFF. 2) Measure the voltage between ECM and chassis ground. ***Connector & terminal*** ***(B135) No. 6 (+) — Chassis ground (–):***	Is the voltage 10 V or more?	Repair the short circuit of harness to power supply between ECM and rear oxygen sensor connector.	Go to step **2**.

	Step	Check	Yes	No
2	**CHECK GROUND CIRCUIT FOR ECM.** 1) Disconnect the connector from ECM. 2) Measure the resistance between ECM and chassis ground. ***Connector & terminal*** ***(B134) No. 3 — Chassis ground:*** ***(B134) No. 4 — Chassis ground:*** ***(B134) No. 6 — Chassis ground:*** ***(B137) No. 1 — Chassis ground:*** ***(B137) No. 3 — Chassis ground:***	Is the resistance less than 5 Ω?	Repair the poor contact of ECM connector.	Repair the harness and connector. NOTE: In this case, repair the following item: • Open circuit of harness between ECM and engine ground • Poor contact of coupling connector

N: DTC P0068 MAP/MAF - THROTTLE POSITION CORRELATION

DTC DETECTING CONDITION:

- Detected when two consecutive driving cycles with fault occur.
- GENERAL DESCRIPTION <Ref. to GD(H4DOTC)-29, DTC P0068 MAP/MAF - THROTTLE POSITION CORRELATION, Diagnostic Trouble Code (DTC) Detecting Criteria.>

CAUTION:
After servicing or replacing faulty parts, perform Clear Memory Mode <Ref. to EN(H4DOTC)(diag)-55, OPERATION, Clear Memory Mode.>, and Inspection Mode <Ref. to EN(H4DOTC)(diag)-44, PROCEDURE, Inspection Mode.>.
WIRING DIAGRAM:

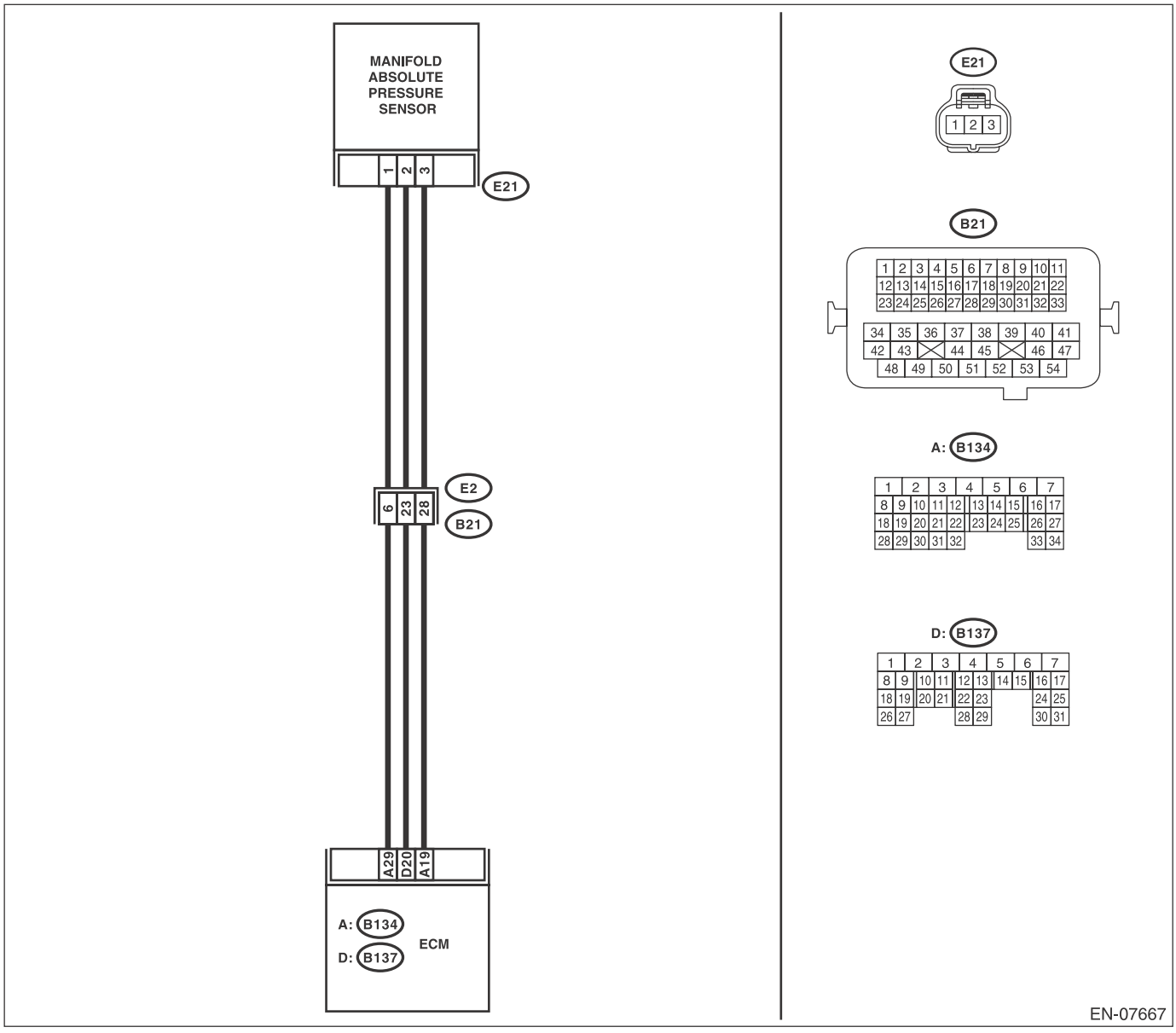

Step		Check	Yes	No
1	**CHECK AIR INTAKE SYSTEM.**	Are there holes, loose bolts or disconnection of hose on air intake system?	Repair the air intake system.	Go to step **2**.

	Step	Check	Yes	No
2	**CHECK MANIFOLD ABSOLUTE PRESSURE SENSOR.** 1) Start the engine and warm up engine until coolant temperature is higher than 75°C (167°F). 2) Place the shift lever in neutral position. 3) Turn the A/C switch to OFF. 4) Turn all the accessory switches to OFF. 5) Read the data of intake manifold pressure sensor signal using Subaru Select Monitor or general scan tool. NOTE: • Subaru Select Monitor For detailed operation procedures, refer to "READ CURRENT DATA FOR ENGINE". <Ref. to EN(H4DOTC)(diag)-37, Subaru Select Monitor.> • General scan tool For detailed operation procedures, refer to the "General Scan Tool Instruction Manual".	Is the measured value 73.3 — 106.6 kPa (550 — 800 mmHg, 21.65 — 31.50 inHg) when the ignition is turned ON, and 20.0 — 46.7 kPa (150 — 350 mmHg, 5.91 — 13.78 inHg) during idling?	Go to step **3**.	Replace the manifold absolute pressure sensor. <Ref. to FU(H4DOTC)-41, Manifold Absolute Pressure Sensor.>
3	**CHECK THROTTLE OPENING ANGLE.** Read the data of throttle position signal using Subaru Select Monitor or general scan tool. NOTE: • Subaru Select Monitor For detailed operation procedures, refer to "READ CURRENT DATA FOR ENGINE". <Ref. to EN(H4DOTC)(diag)-37, Subaru Select Monitor.> • General scan tool For detailed operation procedures, refer to the "General Scan Tool Instruction Manual".	Is the measured value less than 5% when throttle is fully closed?	Go to step **4**.	Replace the electronic throttle control. <Ref. to FU(H4DOTC)-15, Throttle Body.>
4	**CHECK THROTTLE OPENING ANGLE.**	Is the measured value 85% or more when throttle is fully open?	Replace the manifold absolute pressure sensor. <Ref. to FU(H4DOTC)-41, Manifold Absolute Pressure Sensor.>	Replace the electronic throttle control. <Ref. to FU(H4DOTC)-15, Throttle Body.>

O: DTC P0101 MASS OR VOLUME AIR FLOW CIRCUIT RANGE/PERFORMANCE

DTC DETECTING CONDITION:

- Detected when two consecutive driving cycles with fault occur.
- GENERAL DESCRIPTION <Ref. to GD(H4DOTC)-31, DTC P0101 MASS OR VOLUME AIR FLOW CIRCUIT RANGE/PERFORMANCE, Diagnostic Trouble Code (DTC) Detecting Criteria.>

TROUBLE SYMPTOM:

- Improper idling
- Engine stalls.
- Poor driving performance

CAUTION:
After servicing or replacing faulty parts, perform Clear Memory Mode <Ref. to EN(H4DOTC)(diag)-55, OPERATION, Clear Memory Mode.>, and Inspection Mode <Ref. to EN(H4DOTC)(diag)-44, PROCEDURE, Inspection Mode.>.

WIRING DIAGRAM:

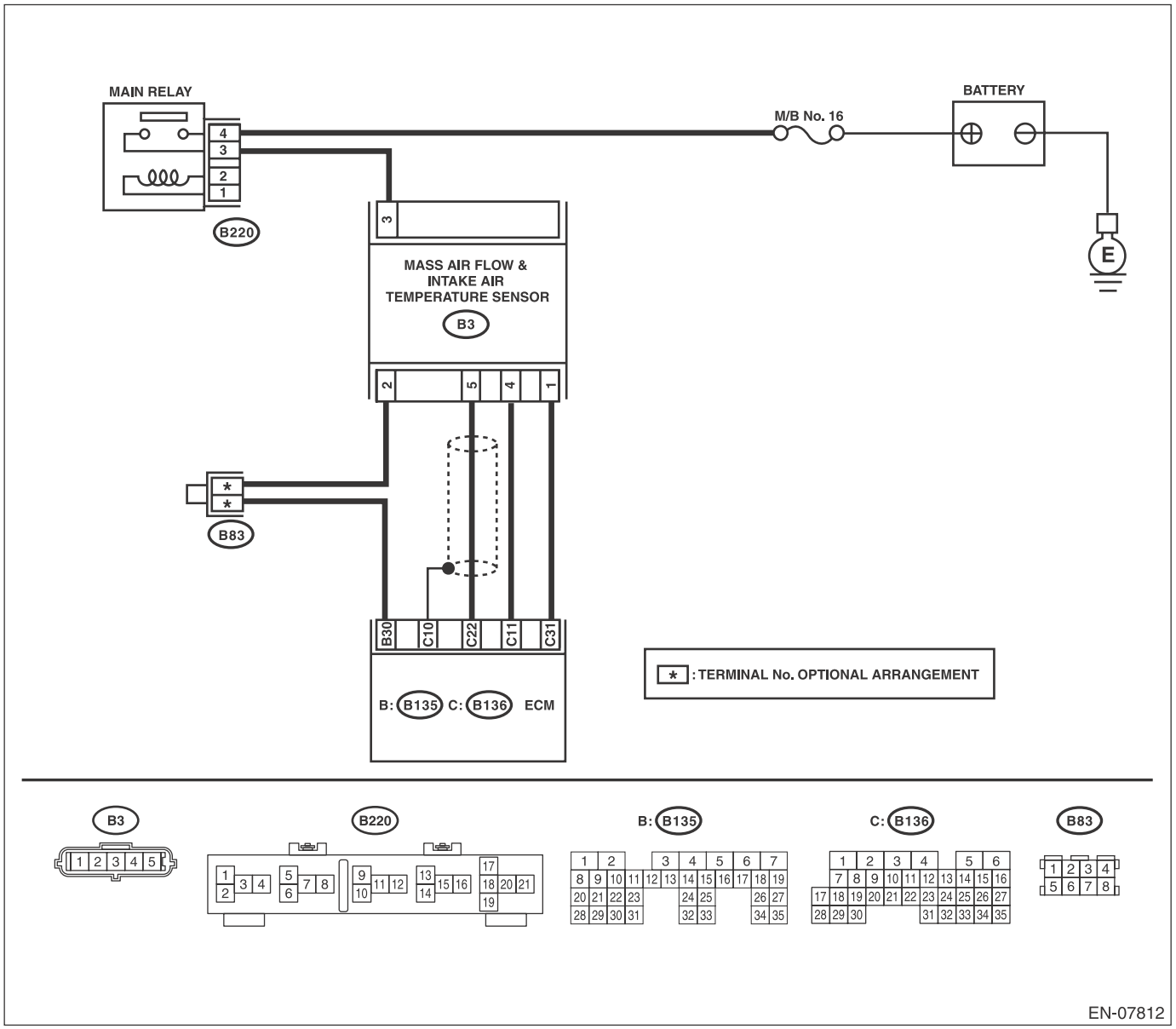

Step		Check	Yes	No
1	**CHECK FOR ANY OTHER DTC ON DISPLAY.**	Is any other DTC displayed?	Check the appropriate DTC using the “List of Diagnostic Trouble Code (DTC)”. <Ref. to EN(H4DOTC)(diag)-78, List of Diagnostic Trouble Code (DTC).>	Replace the mass air flow and intake air temperature sensor. <Ref. to FU(H4DOTC)-40, Mass Air Flow and Intake Air Temperature Sensor.>

P: DTC P0102 MASS OR VOLUME AIR FLOW CIRCUIT LOW INPUT

DTC DETECTING CONDITION:

- Immediately at fault recognition
- GENERAL DESCRIPTION <Ref. to GD(H4DOTC)-33, DTC P0102 MASS OR VOLUME AIR FLOW CIRCUIT LOW INPUT, Diagnostic Trouble Code (DTC) Detecting Criteria.>

TROUBLE SYMPTOM:

- Improper idling
- Engine stalls.
- Poor driving performance

CAUTION:
After servicing or replacing faulty parts, perform Clear Memory Mode <Ref. to EN(H4DOTC)(diag)-55, OPERATION, Clear Memory Mode.>, and Inspection Mode <Ref. to EN(H4DOTC)(diag)-44, PROCEDURE, Inspection Mode.>.

WIRING DIAGRAM:

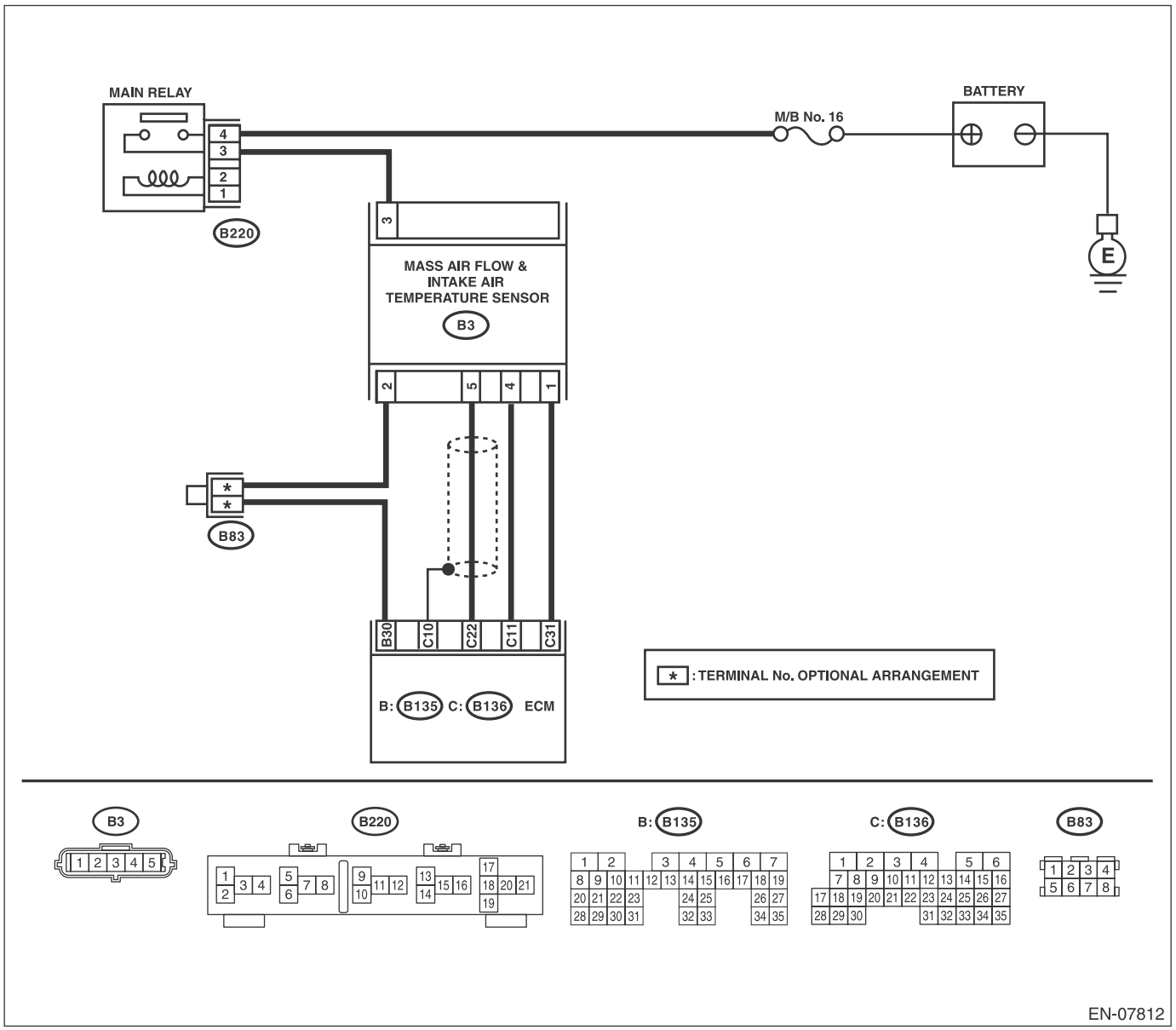

	Step	Check	Yes	No
1	**CHECK CURRENT DATA.** 1) Start the engine. 2) Read the data of air flow sensor signal using Subaru Select Monitor or general scan tool. NOTE: • Subaru Select Monitor For detailed operation procedures, refer to "READ CURRENT DATA FOR ENGINE". <Ref. to EN(H4DOTC)(diag)-37, Subaru Select Monitor.> • General scan tool For detailed operation procedures, refer to the general scan tool operation manual.	Is the voltage less than 0.2 V?	Go to step **2**.	Even if DTC is detected, the circuit has returned to a normal condition at this time. Reproduce the failure, and then perform the diagnosis again. NOTE: In this case, temporary poor contact of connector, temporary open or short circuit of harness may be the cause.
2	**CHECK POWER SUPPLY OF MASS AIR FLOW AND INTAKE AIR TEMPERATURE SENSOR.** 1) Turn the ignition switch to OFF. 2) Disconnect the connector from mass air flow and intake air temperature sensor. 3) Turn the ignition switch to ON. 4) Measure the voltage between mass air flow and intake air temperature sensor connector and engine ground. ***Connector & terminal*** ***(B3) No. 3 (+) — Engine ground (–):***	Is the voltage 10 V or more?	Go to step **3**.	Repair the harness and connector. NOTE: In this case, repair the following item: • Open circuit in harness between main relay and mass air flow and intake air temperature sensor connector • Poor contact of main relay connector
3	**CHECK HARNESS BETWEEN ECM AND MASS AIR FLOW AND INTAKE AIR TEMPERATURE SENSOR CONNECTOR.** 1) Turn the ignition switch to OFF. 2) Disconnect the connector from ECM. 3) Measure the resistance of harness between ECM and the mass air flow and intake air temperature sensor connector. ***Connector & terminal*** ***(B136) No. 22 — (B3) No. 5:***	Is the resistance less than 1 Ω?	Go to step **4**.	Repair the open circuit of harness between the ECM and mass air flow and intake air temperature sensor connector.
4	**CHECK HARNESS BETWEEN ECM AND MASS AIR FLOW AND INTAKE AIR TEMPERATURE SENSOR CONNECTOR.** Measure the resistance between ECM and chassis ground. ***Connector & terminal*** ***(B136) No. 22 — Chassis ground:***	Is the resistance 1 MΩ or more?	Go to step **5**.	Repair the ground short circuit of harness between ECM and mass air flow and intake air temperature sensor connector.
5	**CHECK FOR POOR CONTACT.** Check for poor contact of ECM and mass air flow and intake air temperature sensor connector.	Is there poor contact of the ECM or the mass air flow and intake air temperature sensor connector?	Repair the poor contact of ECM or mass air flow and intake air temperature sensor connector.	Replace the mass air flow and intake air temperature sensor. <Ref. to FU(H4DOTC)-40, Mass Air Flow and Intake Air Temperature Sensor.>

Q: DTC P0103 MASS OR VOLUME AIR FLOW CIRCUIT HIGH INPUT

DTC DETECTING CONDITION:

- Immediately at fault recognition
- GENERAL DESCRIPTION <Ref. to GD(H4DOTC)-34, DTC P0103 MASS OR VOLUME AIR FLOW CIRCUIT HIGH INPUT, Diagnostic Trouble Code (DTC) Detecting Criteria.>

TROUBLE SYMPTOM:

- Improper idling
- Engine stalls.
- Poor driving performance

CAUTION:
After servicing or replacing faulty parts, perform Clear Memory Mode <Ref. to EN(H4DOTC)(diag)-55, OPERATION, Clear Memory Mode.>, and Inspection Mode <Ref. to EN(H4DOTC)(diag)-44, PROCEDURE, Inspection Mode.>.

WIRING DIAGRAM:

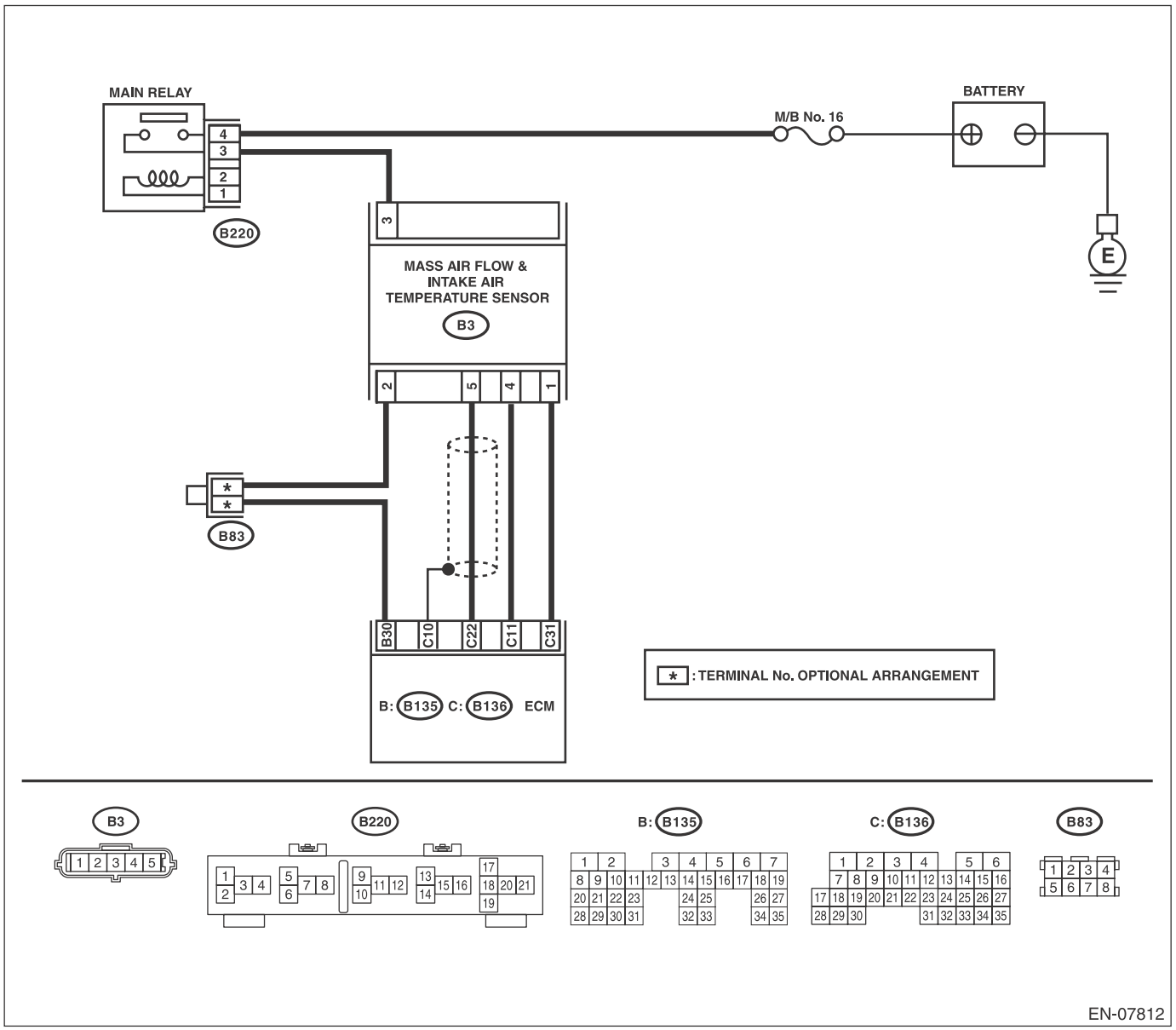

	Step	Check	Yes	No
1	**CHECK CURRENT DATA.** 1) Start the engine. 2) Read the data of air flow sensor signal using Subaru Select Monitor or general scan tool. NOTE: • Subaru Select Monitor For detailed operation procedures, refer to "READ CURRENT DATA FOR ENGINE". <Ref. to EN(H4DOTC)(diag)-37, Subaru Select Monitor.> • General scan tool For detailed operation procedures, refer to the general scan tool operation manual.	Is the voltage 5 V or more?	Go to step **2**.	Even if DTC is detected, the circuit has returned to a normal condition at this time. Reproduce the failure, and then perform the diagnosis again. NOTE: In this case, temporary poor contact of connector, temporary open or short circuit of harness may be the cause.
2	**CHECK HARNESS BETWEEN ECM AND MASS AIR FLOW AND INTAKE AIR TEMPERATURE SENSOR CONNECTOR.** 1) Turn the ignition switch to OFF. 2) Disconnect the connector from mass air flow and intake air temperature sensor. 3) Start the engine. 4) Read the data of air flow sensor signal using Subaru Select Monitor or general scan tool. NOTE: • Subaru Select Monitor For detailed operation procedures, refer to "READ CURRENT DATA FOR ENGINE". <Ref. to EN(H4DOTC)(diag)-37, Subaru Select Monitor.> • General scan tool For detailed operation procedures, refer to the general scan tool operation manual.	Is the voltage 5 V or more?	Repair the short circuit of harness to power supply between ECM and mass air flow and intake air temperature sensor connector.	Go to step **3**.
3	**CHECK HARNESS BETWEEN ECM AND MASS AIR FLOW AND INTAKE AIR TEMPERATURE SENSOR CONNECTOR.** 1) Turn the ignition switch to OFF. 2) Measure the resistance of harness between mass air flow and intake air temperature sensor connector and engine ground. ***Connector & terminal*** ***(B3) No. 4 — Engine ground:***	Is the resistance less than 5 Ω?	Go to step **4**.	Repair the harness and connector. NOTE: In this case, repair the following item: • Open circuit in harness between ECM and mass air flow and intake air temperature sensor connector. • Poor contact of ECM connector
4	**CHECK FOR POOR CONTACT.** Check for poor contact of mass air flow and intake air temperature sensor connector.	Is there poor contact in the mass air flow and intake air temperature sensor connector?	Repair any poor contact of the mass air flow and intake air temperature sensor connector.	Replace the mass air flow and intake air temperature sensor. <Ref. to FU(H4DOTC)-40, Mass Air Flow and Intake Air Temperature Sensor.>

R: DTC P0107 MANIFOLD ABSOLUTE PRESSURE/BAROMETRIC PRESSURE CIRCUIT LOW INPUT

DTC DETECTING CONDITION:

- Immediately at fault recognition
- GENERAL DESCRIPTION <Ref. to GD(H4DOTC)-35, DTC P0107 MANIFOLD ABSOLUTE PRESSURE/ BAROMETRIC PRESSURE CIRCUIT LOW INPUT, Diagnostic Trouble Code (DTC) Detecting Criteria.>

CAUTION:

After servicing or replacing faulty parts, perform Clear Memory Mode <Ref. to EN(H4DOTC)(diag)-55, OPERATION, Clear Memory Mode.>, and Inspection Mode <Ref. to EN(H4DOTC)(diag)-44, PROCEDURE, Inspection Mode.>.

WIRING DIAGRAM:

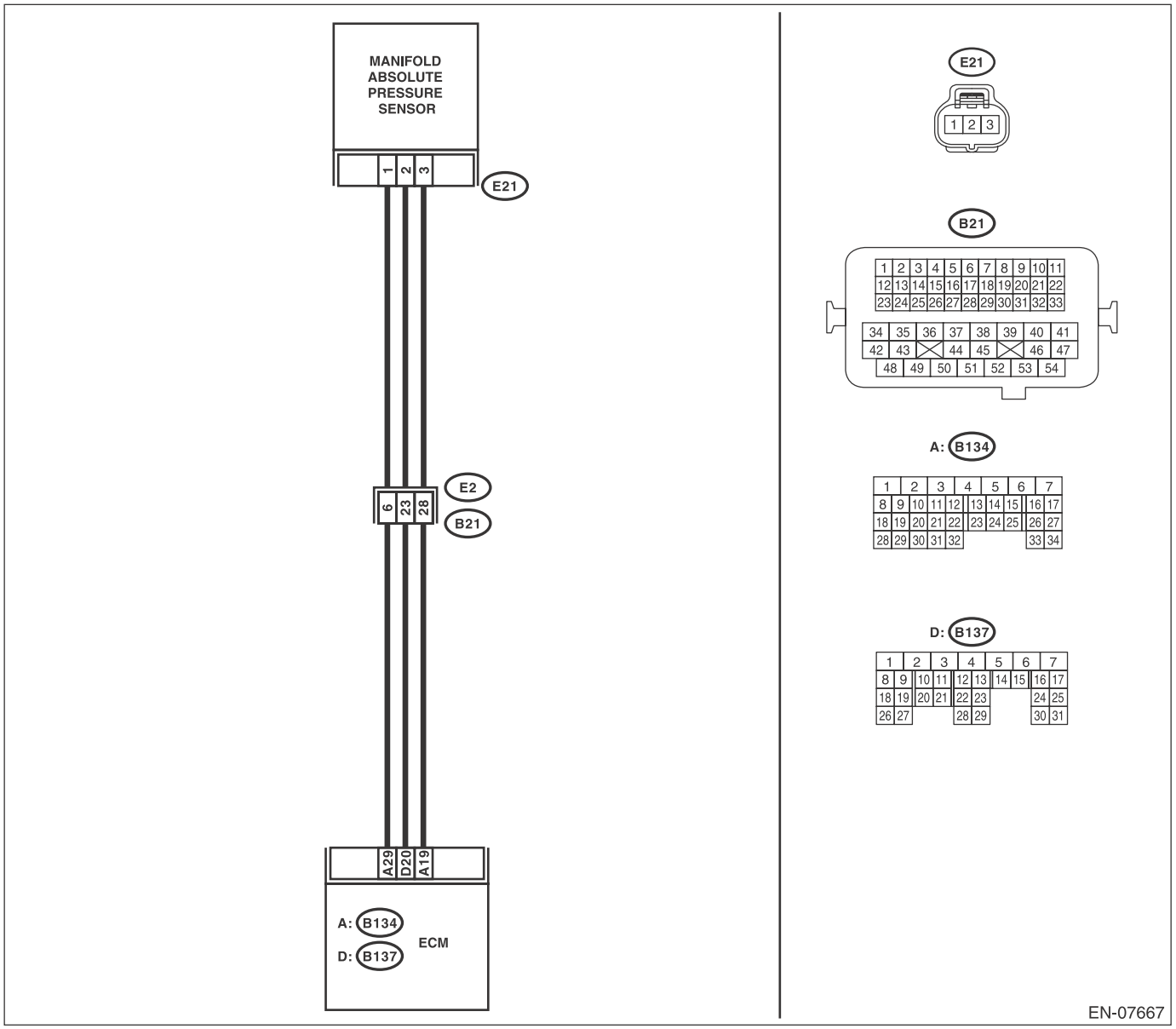

	Step	Check	Yes	No
1	**CHECK CURRENT DATA.** 1) Start the engine. 2) Read the data of intake manifold absolute pressure signal using Subaru Select Monitor or general scan tool. NOTE: • Subaru Select Monitor For detailed operation procedures, refer to "READ CURRENT DATA FOR ENGINE". <Ref. to EN(H4DOTC)(diag)-37, Subaru Select Monitor.> • General scan tool For detailed operation procedures, refer to the general scan tool operation manual.	Is the measured value less than 13.3 kPa (100 mmHg, 3.94 inHg)?	Go to step **2**.	Even if DTC is detected, the circuit has returned to a normal condition at this time. Reproduce the failure, and then perform the diagnosis again. NOTE: In this case, temporary poor contact of connector, temporary open or short circuit of harness may be the cause.
2	**CHECK POWER SUPPLY OF MANIFOLD ABSOLUTE PRESSURE SENSOR.** 1) Turn the ignition switch to OFF. 2) Disconnect the connector from manifold absolute pressure sensor. 3) Turn the ignition switch to ON. 4) Measure the voltage between manifold absolute pressure sensor connector and engine ground. ***Connector & terminal*** ***(E21) No. 3 (+) — Engine ground (–):***	Is the voltage 4.5 V or more?	Go to step **3**.	Repair the harness and connector. NOTE: In this case, repair the following item: • Open circuit of harness between ECM and manifold absolute pressure sensor connector. • Poor contact of ECM connector • Poor contact of coupling connector
3	**CHECK HARNESS BETWEEN ECM AND MANIFOLD ABSOLUTE PRESSURE SENSOR CONNECTOR.** 1) Turn the ignition switch to OFF. 2) Disconnect the connector from ECM. 3) Measure the resistance of harness between ECM and manifold absolute pressure sensor connector. ***Connector & terminal*** ***(B137) No. 20 — (E21) No. 2:***	Is the resistance less than 1 Ω?	Go to step **4**.	Repair the harness and connector. NOTE: In this case, repair the following item: • Open circuit of harness between ECM and manifold absolute pressure sensor connector. • Poor contact of coupling connector
4	**CHECK HARNESS BETWEEN ECM AND MANIFOLD ABSOLUTE PRESSURE SENSOR CONNECTOR.** Measure the resistance between ECM and chassis ground. ***Connector & terminal*** ***(B137) No. 20 — Chassis ground:***	Is the resistance 1 MΩ or more?	Go to step **5**.	Repair ground short circuit of harness between ECM and manifold absolute pressure sensor connector.
5	**CHECK FOR POOR CONTACT.** Check for poor contact of ECM and manifold absolute pressure sensor connector.	Is there poor contact of ECM or manifold absolute pressure sensor connector?	Repair the poor contact of ECM or manifold absolute pressure sensor connector.	Replace the manifold absolute pressure sensor. <Ref. to FU(H4DOTC)-41, Manifold Absolute Pressure Sensor.>

S: DTC P0108 MANIFOLD ABSOLUTE PRESSURE/BAROMETRIC PRESSURE CIRCUIT HIGH INPUT

DTC DETECTING CONDITION:

- Immediately at fault recognition
- GENERAL DESCRIPTION <Ref. to GD(H4DOTC)-36, DTC P0108 MANIFOLD ABSOLUTE PRESSURE/ BAROMETRIC PRESSURE CIRCUIT HIGH INPUT, Diagnostic Trouble Code (DTC) Detecting Criteria.>

CAUTION:

After servicing or replacing faulty parts, perform Clear Memory Mode <Ref. to EN(H4DOTC)(diag)-55, OPERATION, Clear Memory Mode.>, and Inspection Mode <Ref. to EN(H4DOTC)(diag)-44, PROCEDURE, Inspection Mode.>.

WIRING DIAGRAM:

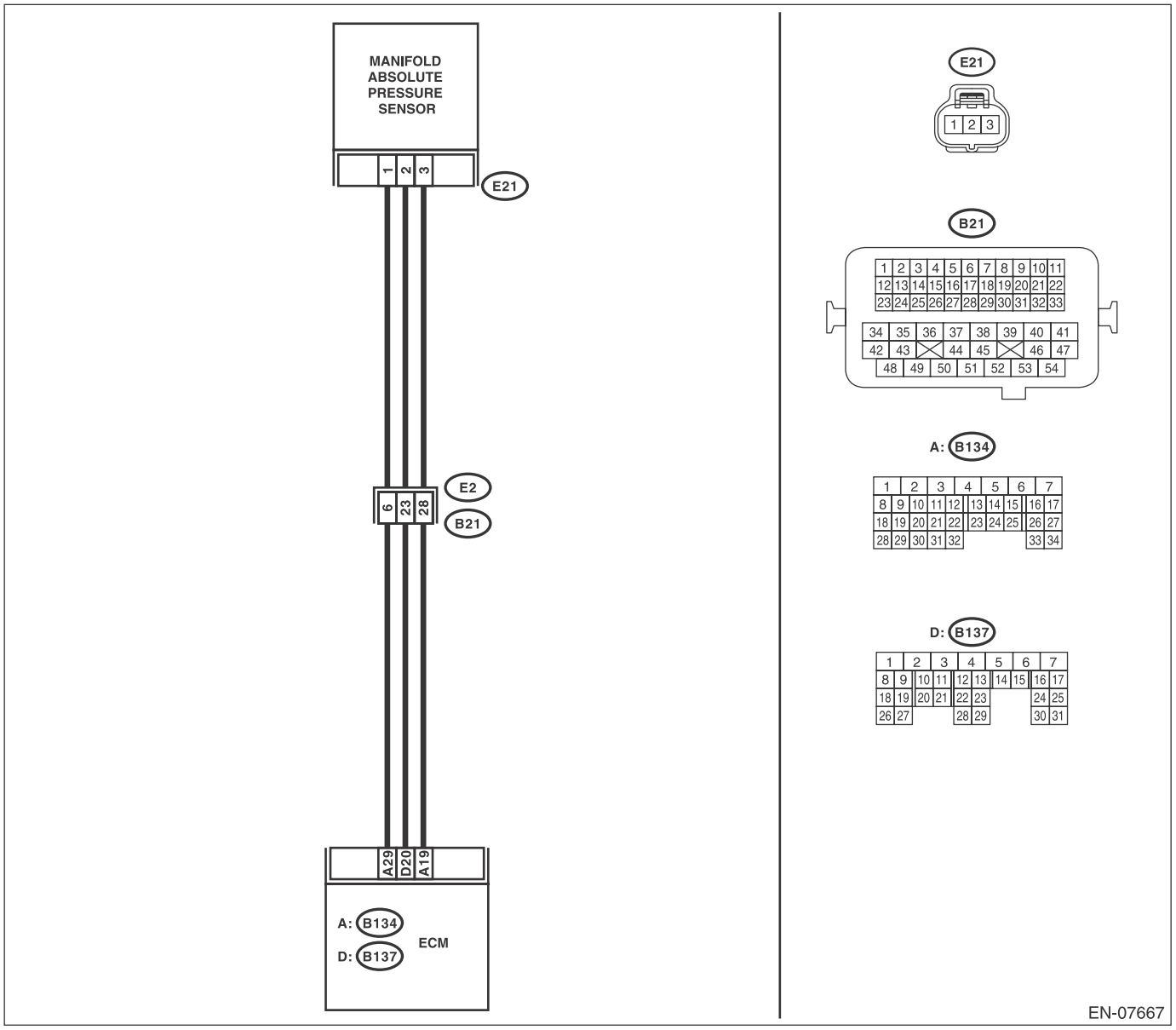

	Step	Check	Yes	No
1	**CHECK CURRENT DATA.** 1) Start the engine. 2) Read the data of intake manifold absolute pressure signal using Subaru Select Monitor or general scan tool. NOTE: • Subaru Select Monitor For detailed operation procedures, refer to "READ CURRENT DATA FOR ENGINE". <Ref. to EN(H4DOTC)(diag)-37, Subaru Select Monitor.> • General scan tool For detailed operation procedures, refer to the general scan tool operation manual.	Is the measured value 119.5 kPa (896.5 mmHg, 35.29 inHg) or more?	Go to step **2**.	Even if DTC is detected, the circuit has returned to a normal condition at this time. Reproduce the failure, and then perform the diagnosis again. NOTE: In this case, temporary poor contact of connector, temporary open or short circuit of harness may be the cause.
2	**CHECK HARNESS BETWEEN ECM AND MANIFOLD ABSOLUTE PRESSURE SENSOR CONNECTOR.** 1) Turn the ignition switch to OFF. 2) Disconnect the connector from manifold absolute pressure sensor. 3) Start the engine. 4) Read the data of intake manifold absolute pressure signal using Subaru Select Monitor or general scan tool. NOTE: • Subaru Select Monitor For detailed operation procedures, refer to "READ CURRENT DATA FOR ENGINE". <Ref. to EN(H4DOTC)(diag)-37, Subaru Select Monitor.> • General scan tool For detailed operation procedures, refer to the general scan tool operation manual.	Is the measured value 119.5 kPa (896.5 mmHg, 35.29 inHg) or more?	Repair the short circuit of harness to power supply between ECM and manifold absolute pressure sensor connector.	Go to step **3**.
3	**CHECK HARNESS BETWEEN ECM AND MANIFOLD ABSOLUTE PRESSURE SENSOR CONNECTOR.** 1) Turn the ignition switch to OFF. 2) Measure the resistance of harness between manifold absolute pressure sensor connector and engine ground. ***Connector & terminal*** ***(E21) No. 1 — Engine ground:***	Is the resistance less than 5 Ω?	Go to step **4**.	Repair the harness and connector. NOTE: In this case, repair the following item: • Open circuit of harness between ECM and manifold absolute pressure sensor connector. • Poor contact of ECM connector • Poor contact of coupling connector
4	**CHECK FOR POOR CONTACT.** Check for poor contact of manifold absolute pressure sensor connector.	Is there poor contact of manifold absolute pressure sensor connector?	Repair the poor contact of manifold absolute pressure sensor connector.	Replace the manifold absolute pressure sensor. <Ref. to FU(H4DOTC)-41, Manifold Absolute Pressure Sensor.>

T: DTC P0111 INTAKE AIR TEMPERATURE SENSOR 1 CIRCUIT RANGE/PERFORMANCE

DTC DETECTING CONDITION:

- Detected when two consecutive driving cycles with fault occur.
- GENERAL DESCRIPTION <Ref. to GD(H4DOTC)-37, DTC P0111 INTAKE AIR TEMPERATURE SENSOR 1 CIRCUIT RANGE/PERFORMANCE, Diagnostic Trouble Code (DTC) Detecting Criteria.>

TROUBLE SYMPTOM:

- Improper idling
- Poor driving performance

CAUTION:

After servicing or replacing faulty parts, perform Clear Memory Mode <Ref. to EN(H4DOTC)(diag)-55, OPERATION, Clear Memory Mode.>, and Inspection Mode <Ref. to EN(H4DOTC)(diag)-44, PROCEDURE, Inspection Mode.>.

WIRING DIAGRAM:

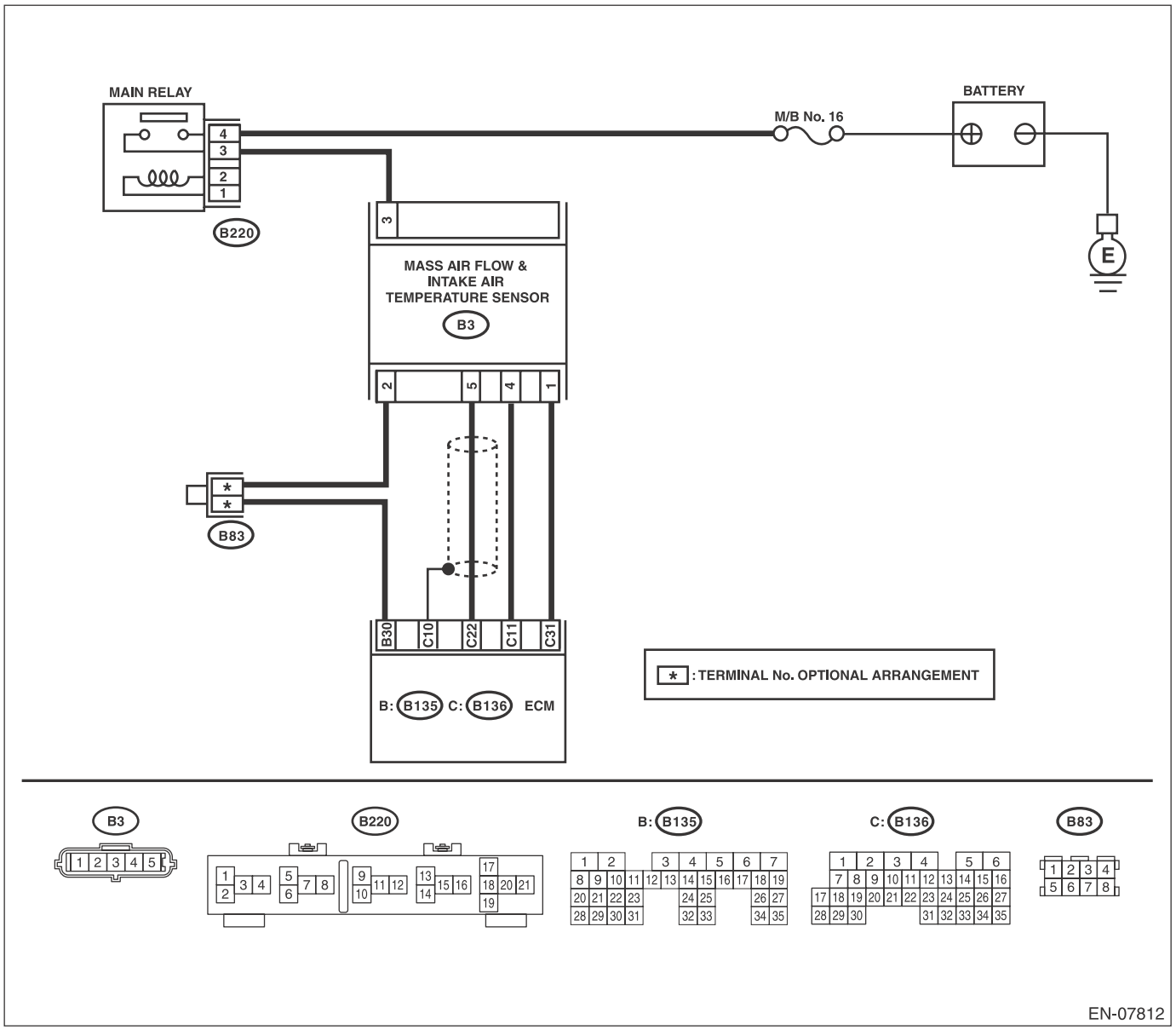

	Step	Check	Yes	No
1	**CHECK ENGINE COOLANT TEMPERATURE.** 1) Start the engine and warm up completely. 2) Measure the engine coolant temperature using the Subaru Select Monitor or general scan tool. NOTE: • Subaru Select Monitor For detailed operation procedures, refer to "READ CURRENT DATA FOR ENGINE". <Ref. to EN(H4DOTC)(diag)-37, Subaru Select Monitor.> • General scan tool For detailed operation procedures, refer to the general scan tool operation manual.	Is the temperature 75°C (167°F) or more?	Replace the mass air flow and intake air temperature sensor. <Ref. to FU(H4DOTC)-40, Mass Air Flow and Intake Air Temperature Sensor.>	Go to DTC P0125. <Ref. to EN(H4DOTC)(diag)-130, DTC P0125 INSUFFICIENT COOLANT TEMPERATURE FOR CLOSED LOOP FUEL CONTROL, Diagnostic Procedure with Diagnostic Trouble Code (DTC).>

U: DTC P0112 INTAKE AIR TEMPERATURE SENSOR 1 CIRCUIT LOW

DTC DETECTING CONDITION:

- Immediately at fault recognition
- GENERAL DESCRIPTION <Ref. to GD(H4DOTC)-40, DTC P0112 INTAKE AIR TEMPERATURE SENSOR 1 CIRCUIT LOW, Diagnostic Trouble Code (DTC) Detecting Criteria.>

TROUBLE SYMPTOM:

- Improper idling
- Poor driving performance

CAUTION:

After servicing or replacing faulty parts, perform Clear Memory Mode <Ref. to EN(H4DOTC)(diag)-55, OPERATION, Clear Memory Mode.>, and Inspection Mode <Ref. to EN(H4DOTC)(diag)-44, PROCEDURE, Inspection Mode.>.

WIRING DIAGRAM:

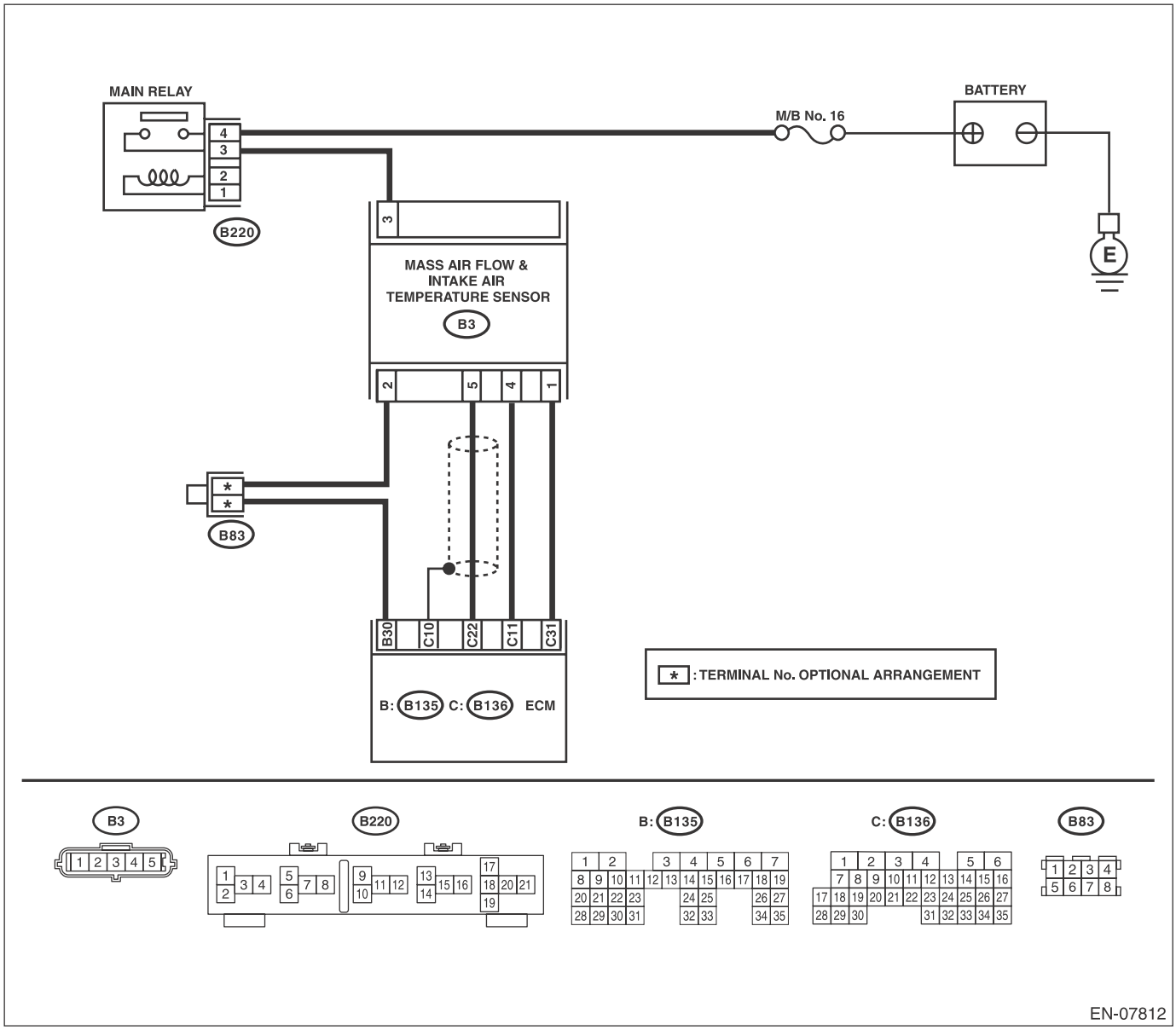

	Step	Check	Yes	No
1	**CHECK CURRENT DATA.** 1) Start the engine. 2) Read the data of intake air temperature sensor signal using Subaru Select Monitor or general scan tool. NOTE: • Subaru Select Monitor For detailed operation procedures, refer to "READ CURRENT DATA FOR ENGINE". <Ref. to EN(H4DOTC)(diag)-37, Subaru Select Monitor.> • General scan tool For detailed operation procedures, refer to the general scan tool operation manual.	Is the intake air temperature 120°C (248°F) or more?	Go to step **2**.	Even if DTC is detected, the circuit has returned to a normal condition at this time. Reproduce the failure, and then perform the diagnosis again. NOTE: In this case, temporary poor contact of connector, temporary open or short circuit of harness may be the cause.
2	**CHECK HARNESS BETWEEN ECM AND MASS AIR FLOW AND INTAKE AIR TEMPERATURE SENSOR CONNECTOR.** 1) Turn the ignition switch to OFF. 2) Disconnect the connector from ECM and mass air flow and intake air temperature sensor. 3) Measure the resistance between ECM and chassis ground. ***Connector & terminal*** ***(B136) No. 31 — Chassis ground:***	Is the resistance 1 MΩ or more?	Replace the mass air flow and intake air temperature sensor. <Ref. to FU(H4DOTC)-40, Mass Air Flow and Intake Air Temperature Sensor.>	Repair the ground short circuit of harness between ECM and mass air flow and intake air temperature sensor connector.

V: DTC P0113 INTAKE AIR TEMPERATURE SENSOR 1 CIRCUIT HIGH

DTC DETECTING CONDITION:

- Immediately at fault recognition
- GENERAL DESCRIPTION <Ref. to GD(H4DOTC)-41, DTC P0113 INTAKE AIR TEMPERATURE SENSOR 1 CIRCUIT HIGH, Diagnostic Trouble Code (DTC) Detecting Criteria.>

TROUBLE SYMPTOM:

- Improper idling
- Poor driving performance

CAUTION:

After servicing or replacing faulty parts, perform Clear Memory Mode <Ref. to EN(H4DOTC)(diag)-55, OPERATION, Clear Memory Mode.>, and Inspection Mode <Ref. to EN(H4DOTC)(diag)-44, PROCEDURE, Inspection Mode.>.

WIRING DIAGRAM:

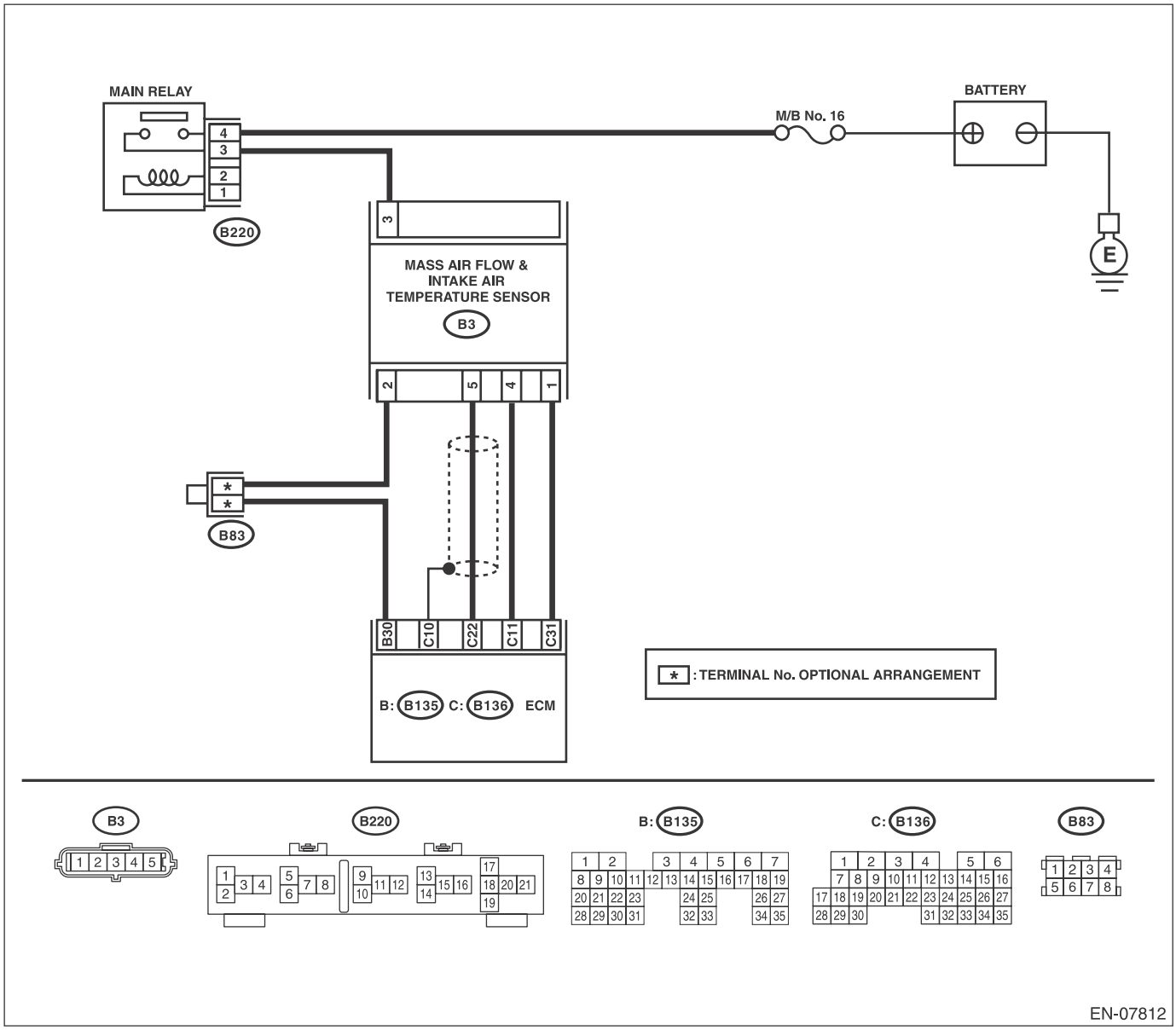

	Step	Check	Yes	No
1	**CHECK CURRENT DATA.** 1) Start the engine. 2) Read the data of intake air temperature sensor signal using Subaru Select Monitor or general scan tool. NOTE: • Subaru Select Monitor For detailed operation procedures, refer to "READ CURRENT DATA FOR ENGINE". <Ref. to EN(H4DOTC)(diag)-37, Subaru Select Monitor.> • General scan tool For detailed operation procedures, refer to the general scan tool operation manual.	Is the intake air temperature less than –40°C (–40°F)?	Go to step **2**.	Even if DTC is detected, the circuit has returned to a normal condition at this time. Reproduce the failure, and then perform the diagnosis again. NOTE: In this case, temporary poor contact of connector, temporary open or short circuit of harness may be the cause.
2	**CHECK FOR POOR CONTACT.** Check for poor contact of ECM and mass air flow and intake air temperature sensor connector.	Is there poor contact of the ECM or the mass air flow and intake air temperature sensor connector?	Repair the poor contact of ECM or mass air flow and intake air temperature sensor connector.	Go to step **3**.
3	**CHECK HARNESS BETWEEN ECM AND MASS AIR FLOW AND INTAKE AIR TEMPERATURE SENSOR CONNECTOR.** 1) Turn the ignition switch to OFF. 2) Disconnect the connector from ECM and mass air flow and intake air temperature sensor. 3) Measure the resistance of harness between ECM and the mass air flow and intake air temperature sensor connector. ***Connector & terminal*** ***(B136) No. 31 — (B3) No. 1:*** ***(B135) No. 30 — (B3) No. 2:***	Is the resistance less than 1 Ω?	Go to step **4**.	Repair the harness and connector. NOTE: In this case, repair the following item: • Open circuit in harness between ECM and mass air flow and intake air temperature sensor connector. • Poor contact of coupling connector
4	**CHECK HARNESS BETWEEN ECM AND MASS AIR FLOW AND INTAKE AIR TEMPERATURE SENSOR CONNECTOR.** 1) Connect all connectors. 2) Turn the ignition switch to OFF. 3) Measure the voltage between ECM and chassis ground. ***Connector & terminal*** ***(B136) No. 31 (+) — Chassis ground (–):***	Is the voltage 5 V or more?	Repair the short circuit of harness to power supply between ECM and mass air flow and intake air temperature sensor connector.	Replace the mass air flow and intake air temperature sensor. <Ref. to FU(H4DOTC)-40, Mass Air Flow and Intake Air Temperature Sensor.>

W: DTC P0117 ENGINE COOLANT TEMPERATURE CIRCUIT LOW

DTC DETECTING CONDITION:

- Immediately at fault recognition
- GENERAL DESCRIPTION <Ref. to GD(H4DOTC)-42, DTC P0117 ENGINE COOLANT TEMPERATURE CIRCUIT LOW, Diagnostic Trouble Code (DTC) Detecting Criteria.>

TROUBLE SYMPTOM:

- Hard to start
- Improper idling
- Poor driving performance

CAUTION:
After servicing or replacing faulty parts, perform Clear Memory Mode <Ref. to EN(H4DOTC)(diag)-55, OPERATION, Clear Memory Mode.>, and Inspection Mode <Ref. to EN(H4DOTC)(diag)-44, PROCEDURE, Inspection Mode.>.

WIRING DIAGRAM:

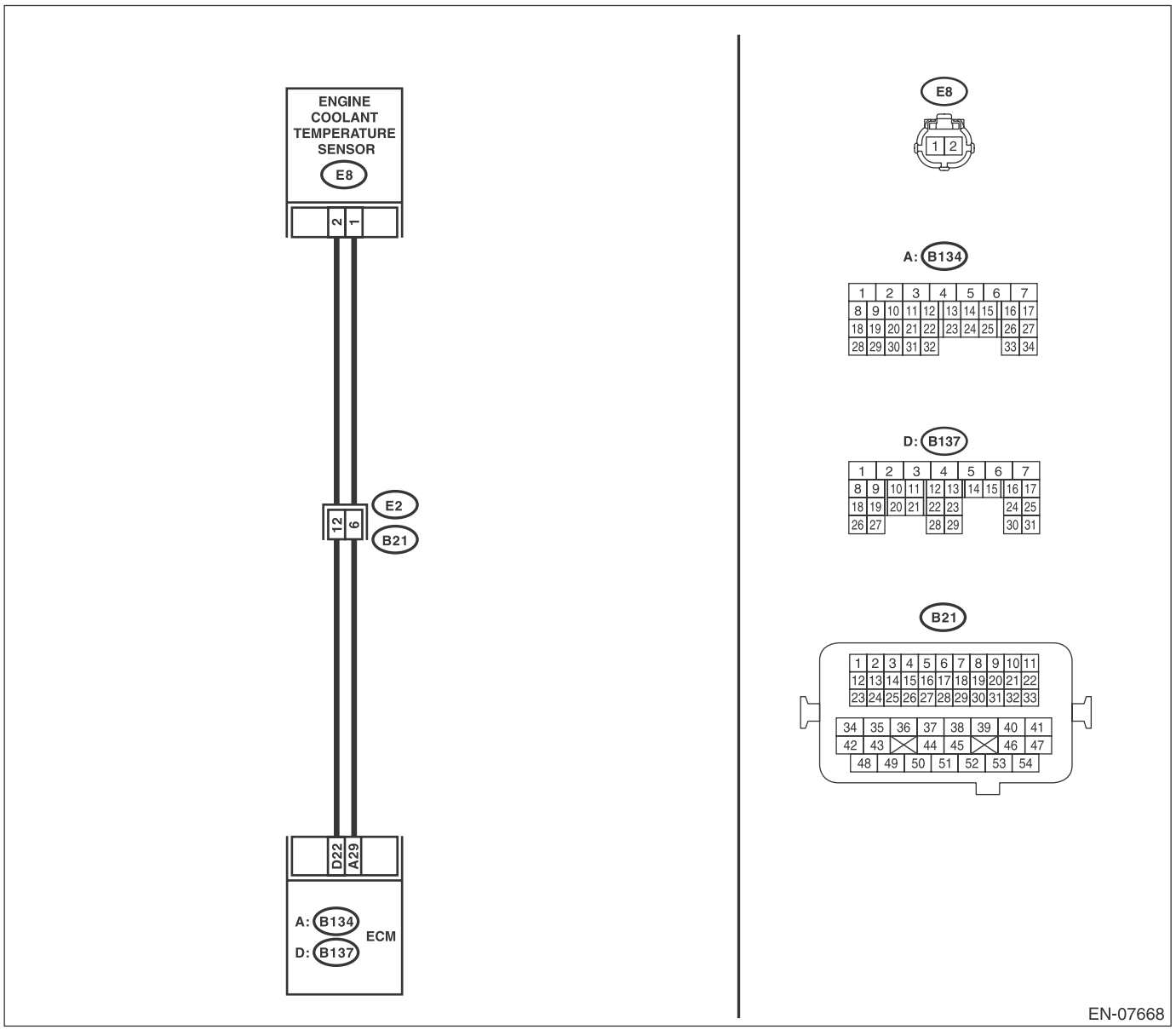

	Step	Check	Yes	No
1	**CHECK CURRENT DATA.** 1) Start the engine. 2) Read the data of engine coolant temperature sensor signal using Subaru Select Monitor or general scan tool. NOTE: • Subaru Select Monitor For detailed operation procedures, refer to "READ CURRENT DATA FOR ENGINE". <Ref. to EN(H4DOTC)(diag)-37, Subaru Select Monitor.> • General scan tool For detailed operation procedures, refer to the general scan tool operation manual.	Is the temperature 150°C (302°F) or more?	Go to step **2**.	Even if DTC is detected, the circuit has returned to a normal condition at this time. Reproduce the failure, and then perform the diagnosis again. NOTE: In this case, temporary poor contact of connector, temporary open or short circuit of harness may be the cause.
2	**CHECK HARNESS BETWEEN ECM AND ENGINE COOLANT TEMPERATURE SENSOR CONNECTOR.** 1) Turn the ignition switch to OFF. 2) Disconnect the connectors from ECM and engine coolant temperature sensor. 3) Measure the resistance between ECM and chassis ground. ***Connector & terminal*** ***(B137) No. 22 — Chassis ground:***	Is the resistance 1 MΩ or more?	Replace the engine coolant temperature sensor. <Ref. to FU(H4DOTC)-32, Engine Coolant Temperature Sensor.>	Repair short circuit in harness to ground between ECM and engine coolant temperature sensor connector.

X: DTC P0118 ENGINE COOLANT TEMPERATURE CIRCUIT HIGH

DTC DETECTING CONDITION:

- Immediately at fault recognition
- GENERAL DESCRIPTION <Ref. to GD(H4DOTC)-43, DTC P0118 ENGINE COOLANT TEMPERATURE CIRCUIT HIGH, Diagnostic Trouble Code (DTC) Detecting Criteria.>

TROUBLE SYMPTOM:

- Hard to start
- Improper idling
- Poor driving performance

CAUTION:
After servicing or replacing faulty parts, perform Clear Memory Mode <Ref. to EN(H4DOTC)(diag)-55, OPERATION, Clear Memory Mode.>, and Inspection Mode <Ref. to EN(H4DOTC)(diag)-44, PROCEDURE, Inspection Mode.>.

WIRING DIAGRAM:

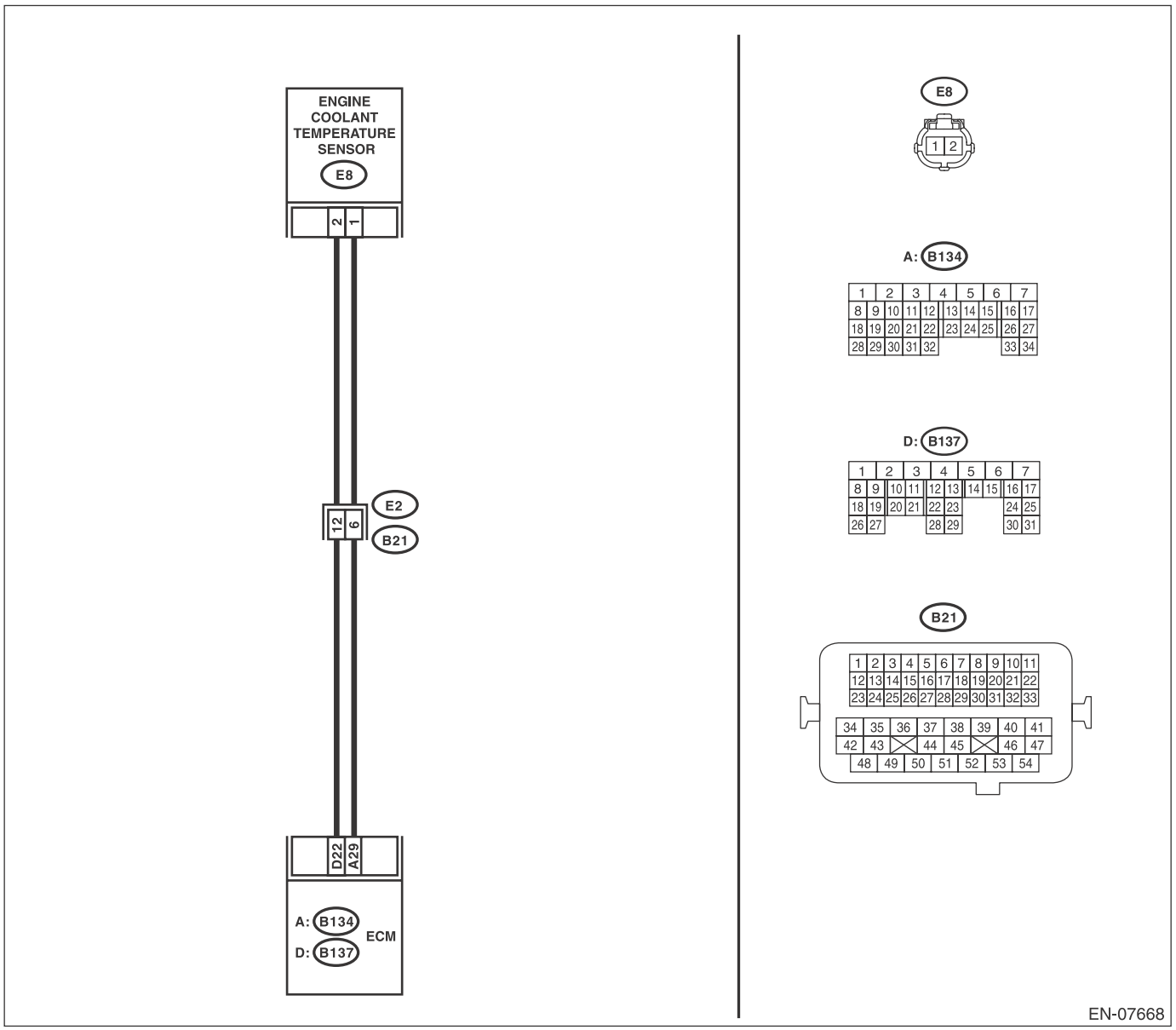

	Step	Check	Yes	No
1	**CHECK CURRENT DATA.** 1) Start the engine. 2) Read the data of engine coolant temperature sensor signal using Subaru Select Monitor or general scan tool. NOTE: • Subaru Select Monitor For detailed operation procedures, refer to "READ CURRENT DATA FOR ENGINE". <Ref. to EN(H4DOTC)(diag)-37, Subaru Select Monitor.> • General scan tool For detailed operation procedures, refer to the general scan tool operation manual.	Is the engine coolant temperature less than –40°C (–40°F)?	Go to step **2**.	Even if DTC is detected, the circuit has returned to a normal condition at this time. Reproduce the failure, and then perform the diagnosis again. NOTE: In this case, temporary poor contact of connector, temporary open or short circuit of harness may be the cause.
2	**CHECK FOR POOR CONTACT.** Check for poor contact of ECM and engine coolant temperature sensor connector.	Is there poor contact of ECM or engine coolant temperature sensor connector?	Repair the poor contact of ECM or engine coolant temperature sensor connector.	Go to step **3**.
3	**CHECK HARNESS BETWEEN ECM AND ENGINE COOLANT TEMPERATURE SENSOR CONNECTOR.** 1) Turn the ignition switch to OFF. 2) Disconnect the connectors from ECM and engine coolant temperature sensor. 3) Measure the resistance of harness between ECM and engine coolant temperature sensor connector. ***Connector & terminal*** ***(B137) No. 22 — (E8) No. 2:*** ***(B134) No. 29 — (E8) No. 1:***	Is the resistance less than 1 Ω?	Go to step **4**.	Repair the harness and connector. NOTE: In this case, repair the following item: • Open circuit in harness between ECM and engine coolant temperature sensor connector • Poor contact of coupling connector
4	**CHECK HARNESS BETWEEN ECM AND ENGINE COOLANT TEMPERATURE SENSOR CONNECTOR.** 1) Connect all connectors. 2) Turn the ignition switch to ON. 3) Measure the voltage between ECM and chassis ground. ***Connector & terminal*** ***(B137) No. 22 (+) — Chassis ground (–):***	Is the voltage 5 V or more?	Repair the short circuit of harness to power supply between ECM and engine coolant temperature sensor connector.	Replace the engine coolant temperature sensor. <Ref. to FU(H4DOTC)-32, Engine Coolant Temperature Sensor.>

Y: DTC P0122 THROTTLE/PEDAL POSITION SENSOR/SWITCH “A” CIRCUIT LOW

DTC DETECTING CONDITION:

- Immediately at fault recognition
- GENERAL DESCRIPTION <Ref. to GD(H4DOTC)-44, DTC P0122 THROTTLE/PEDAL POSITION SENSOR/SWITCH “A” CIRCUIT LOW, Diagnostic Trouble Code (DTC) Detecting Criteria.>

TROUBLE SYMPTOM:

- Improper idling
- Engine stalls.
- Poor driving performance

CAUTION:
After servicing or replacing faulty parts, perform Clear Memory Mode <Ref. to EN(H4DOTC)(diag)-55, OPERATION, Clear Memory Mode.>, and Inspection Mode <Ref. to EN(H4DOTC)(diag)-44, PROCEDURE, Inspection Mode.>.

WIRING DIAGRAM:

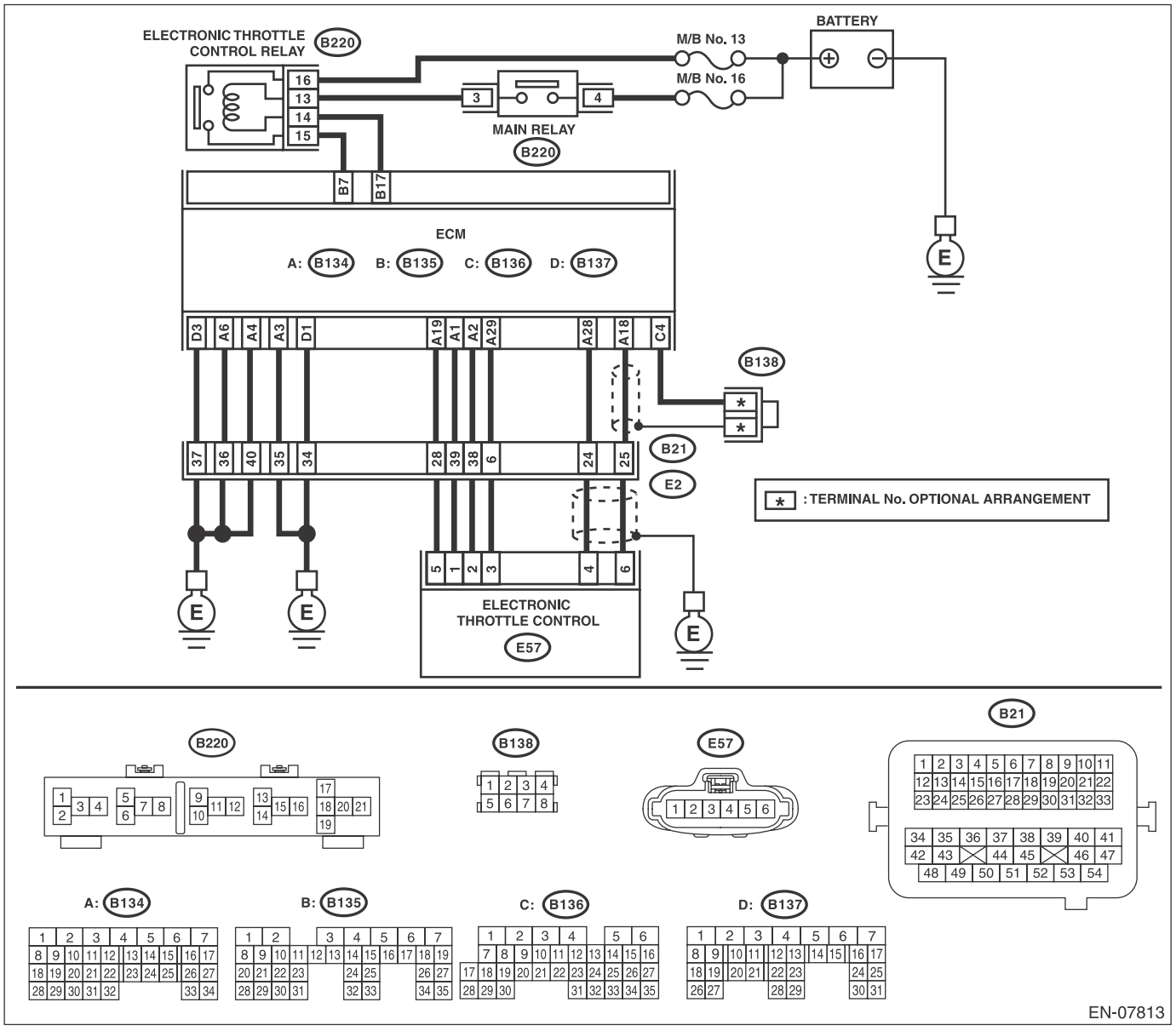

	Step	Check	Yes	No
1	**CHECK HARNESS BETWEEN ECM AND ELECTRONIC THROTTLE CONTROL CONNECTOR.** 1) Turn the ignition switch to OFF. 2) Disconnect the connectors from the ECM and electronic throttle control. 3) Measure the resistance between ECM and chassis ground. ***Connector & terminal*** ***(B134) No. 19 — Chassis ground:*** ***(B134) No. 18 — Chassis ground:*** ***(B134) No. 18 — (B136) No. 4:***	Is the resistance 1 MΩ or more?	Go to step **2**.	Repair the ground short circuit of harness between ECM and electronic throttle control connector.
2	**CHECK SHORT CIRCUIT INSIDE THE ECM.** 1) Connect the ECM. 2) Measure the resistance between electronic throttle control connector and engine ground. ***Connector & terminal*** ***(E57) No. 6 — Engine ground:***	Is the resistance 1 MΩ or more?	Replace the electronic throttle control. <Ref. to FU(H4DOTC)-15, Throttle Body.>	Repair the ground short circuit of harness between ECM and electronic throttle control connector. Replace the ECM if defective. <Ref. to FU(H4DOTC)-57, Engine Control Module (ECM).>

Z: DTC P0123 THROTTLE/PEDAL POSITION SENSOR/SWITCH “A” CIRCUIT HIGH

DTC DETECTING CONDITION:

- Immediately at fault recognition
- GENERAL DESCRIPTION <Ref. to GD(H4DOTC)-45, DTC P0123 THROTTLE/PEDAL POSITION SENSOR/SWITCH “A” CIRCUIT HIGH, Diagnostic Trouble Code (DTC) Detecting Criteria.>

TROUBLE SYMPTOM:

- Improper idling
- Engine stalls.
- Poor driving performance

CAUTION:
After servicing or replacing faulty parts, perform Clear Memory Mode <Ref. to EN(H4DOTC)(diag)-55, OPERATION, Clear Memory Mode.>, and Inspection Mode <Ref. to EN(H4DOTC)(diag)-44, PROCEDURE, Inspection Mode.>.

WIRING DIAGRAM:

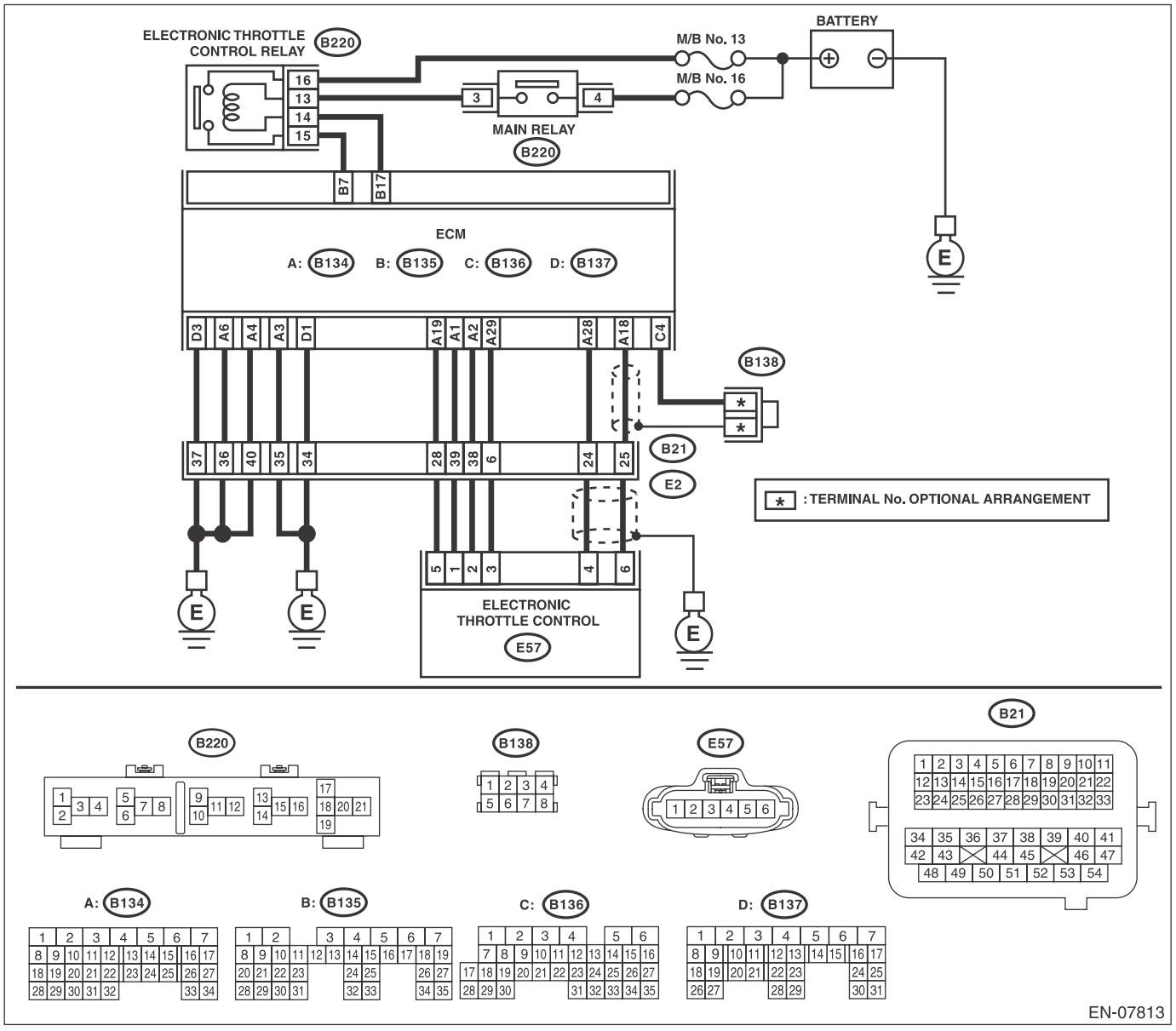

	Step	Check	Yes	No
1	**CHECK HARNESS BETWEEN ECM AND ELECTRONIC THROTTLE CONTROL CONNECTOR.** 1) Turn the ignition switch to OFF. 2) Disconnect the connectors from the ECM and electronic throttle control. 3) Measure the resistance of harness between ECM and electronic throttle control connector. ***Connector & terminal*** ***(B134) No. 18 — (E57) No. 6:*** ***(B134) No. 29 — (E57) No. 3:***	Is the resistance less than 1 Ω?	Go to step **2**.	Repair the harness and connector. NOTE: In this case, repair the following item: • Open circuit in harness between ECM and electronic throttle control connector • Poor contact of coupling connector
2	**CHECK HARNESS BETWEEN ECM AND ELECTRONIC THROTTLE CONTROL CONNECTOR.** 1) Connect the connector to ECM. 2) Measure the resistance between electronic throttle control connector and engine ground. ***Connector & terminal*** ***(E57) No. 3 — Engine ground:***	Is the resistance less than 5 Ω?	Go to step **3**.	Repair the harness and connector. NOTE: In this case, repair the following item: • Open circuit of harness between ECM and engine ground • Poor contact of ECM connector • Poor contact of coupling connector
3	**CHECK HARNESS BETWEEN ECM AND ELECTRONIC THROTTLE CONTROL CONNECTOR.** 1) Turn the ignition switch to ON. 2) Measure the voltage between electronic throttle control connector and engine ground. ***Connector & terminal*** ***(E57) No. 6 (+) — Engine ground (–):***	Is the voltage 5 V or more?	Repair the short circuit of harness to power supply between ECM and electronic throttle control connector.	Go to step **4**.
4	**CHECK HARNESS BETWEEN ECM AND ELECTRONIC THROTTLE CONTROL CONNECTOR.** 1) Turn the ignition switch to OFF. 2) Disconnect the connector from ECM. 3) Measure the resistance between ECM connectors. ***Connector & terminal*** ***(B134) No. 19 — (B134) No. 18:***	Is the resistance 1 MΩ or more?	Repair the poor contact of electronic throttle control connector. Replace the electronic throttle control if defective. <Ref. to FU(H4DOTC)-15, Throttle Body.>	Repair the short circuit of harness to power supply between ECM and electronic throttle control connector.

AA:DTC P0125 INSUFFICIENT COOLANT TEMPERATURE FOR CLOSED LOOP FUEL CONTROL

DTC DETECTING CONDITION:

- Detected when two consecutive driving cycles with fault occur.
- GENERAL DESCRIPTION <Ref. to GD(H4DOTC)-46, DTC P0125 INSUFFICIENT COOLANT TEMPERATURE FOR CLOSED LOOP FUEL CONTROL, Diagnostic Trouble Code (DTC) Detecting Criteria.>

TROUBLE SYMPTOM:

Engine does not return to idle.

CAUTION:

After servicing or replacing faulty parts, perform Clear Memory Mode <Ref. to EN(H4DOTC)(diag)-55, OPERATION, Clear Memory Mode.>, and Inspection Mode <Ref. to EN(H4DOTC)(diag)-44, PROCEDURE, Inspection Mode.>.

	Step	Check	Yes	No
1	**CHECK TIRE SIZE.**	Is the tire size as specified and the same size as three other wheels?	Go to step **2**.	Replace the tire.
2	**CHECK ENGINE COOLANT.** Check the following items: • Amount of engine coolant • Engine coolant freeze • Contamination of engine coolant	Is the engine coolant normal?	Go to step **3**.	Fill or replace the engine coolant. <Ref. to CO(H4DOTC)-14, REPLACEMENT, Engine Coolant.>
3	**CHECK THERMOSTAT.**	Does the thermostat remain opened?	Replace the thermostat. <Ref. to CO(H4DOTC)-19, Thermostat.>	Replace the engine coolant temperature sensor. <Ref. to FU(H4DOTC)-32, Engine Coolant Temperature Sensor.>

AB:DTC P0126 INSUFFICIENT ENGINE COOLANT TEMPERATURE FOR STABLE OPERATION

DTC DETECTING CONDITION:

- Detected when two consecutive driving cycles with fault occur.
- GENERAL DESCRIPTION <Ref. to GD(H4DOTC)-48, DTC P0126 INSUFFICIENT ENGINE COOLANT TEMPERATURE FOR STABLE OPERATION, Diagnostic Trouble Code (DTC) Detecting Criteria.>

TROUBLE SYMPTOM:

- Hard to start
- Improper idling
- Poor driving performance

CAUTION:

After servicing or replacing faulty parts, perform Clear Memory Mode <Ref. to EN(H4DOTC)(diag)-55, OPERATION, Clear Memory Mode.>, and Inspection Mode <Ref. to EN(H4DOTC)(diag)-44, PROCEDURE, Inspection Mode.>.

WIRING DIAGRAM:

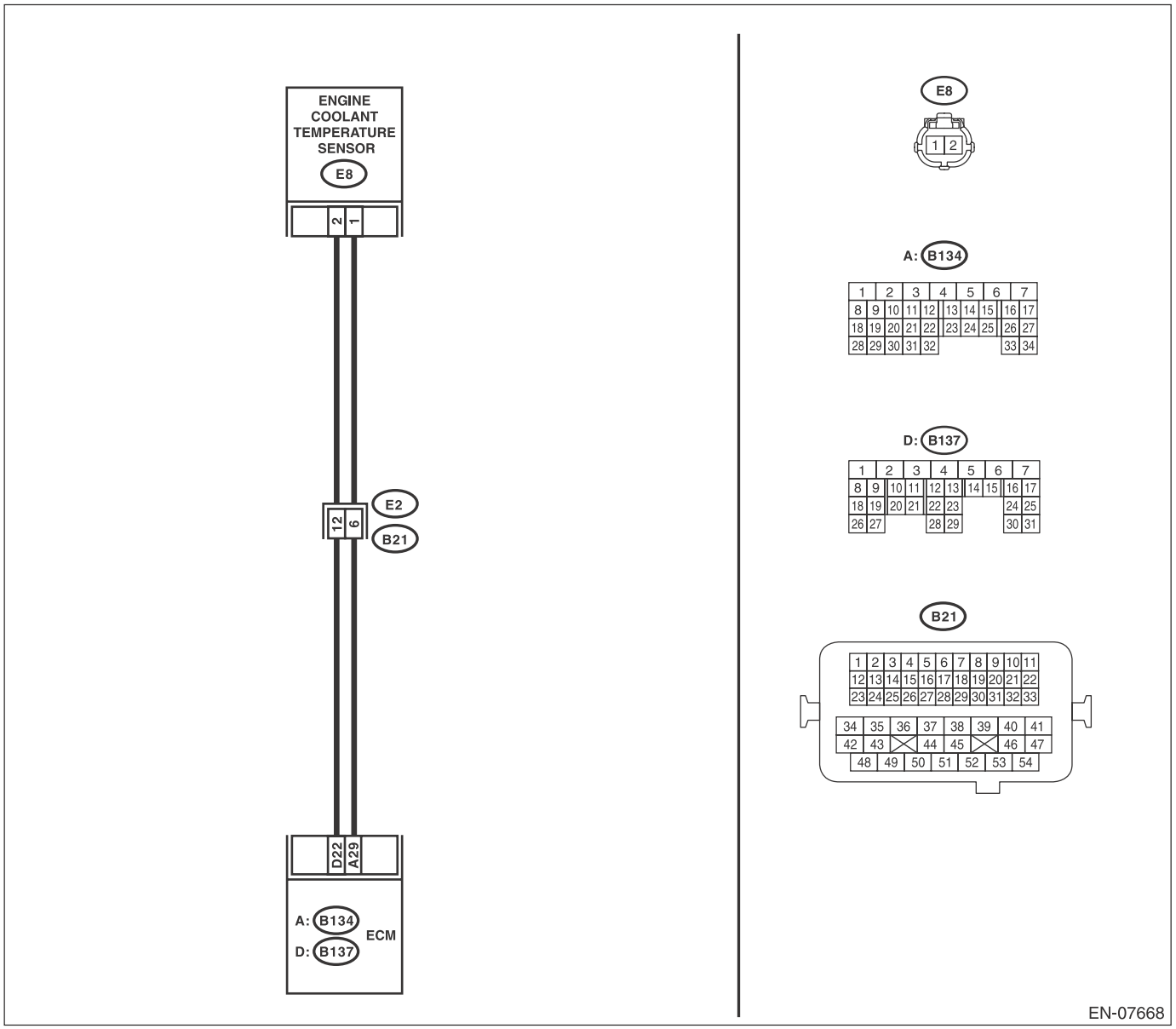

	Step	Check	Yes	No
1	**CHECK ENGINE COOLANT TEMPERATURE SENSOR.** Measure the resistance between engine coolant temperature sensor terminals when the engine coolant is cold and after warmed up. ***Terminals*** ***No. 1 — No. 2:***	Is the resistance of engine coolant temperature sensor different between when engine coolant is cold and after warmed up?	Repair the poor contact of ECM connector.	Replace the engine coolant temperature sensor. <Ref. to FU(H4DOTC)-32, Engine Coolant Temperature Sensor.>

AC:DTC P0128 COOLANT THERMOSTAT (ENGINE COOLANT TEMPERATURE BELOW THERMOSTAT REGULATING TEMPERATURE)

DTC DETECTING CONDITION:

- Detected when two consecutive driving cycles with fault occur.
- GENERAL DESCRIPTION <Ref. to GD(H4DOTC)-50, DTC P0128 COOLANT THERMOSTAT (ENGINE COOLANT TEMPERATURE BELOW THERMOSTAT REGULATING TEMPERATURE), Diagnostic Trouble Code (DTC) Detecting Criteria.>

TROUBLE SYMPTOM:

Thermostat remains open.

CAUTION:

After servicing or replacing faulty parts, perform Clear Memory Mode <Ref. to EN(H4DOTC)(diag)-55, OPERATION, Clear Memory Mode.>, and Inspection Mode <Ref. to EN(H4DOTC)(diag)-44, PROCEDURE, Inspection Mode.>.

	Step	Check	Yes	No
1	**CHECK ENGINE COOLANT.**	Is the engine coolant amount normal?	Go to step **2**.	Refill the engine coolant. <Ref. to CO(H4DOTC)-14, Engine Coolant.>
2	**CHECK RADIATOR FAN.** 1) Start the engine. 2) Check the radiator fan operation.	Does the radiator fan continuously rotate for 3 minutes or more during idling?	Repair radiator fan circuit. <Ref. to CO(H4DOTC)-25, Radiator Main Fan and Fan Motor.> and <Ref. to CO(H4DOTC)-27, Radiator Sub Fan and Fan Motor.>	Replace the thermostat. <Ref. to CO(H4DOTC)-19, Thermostat.>

AD:DTC P0131 O2 SENSOR CIRCUIT LOW VOLTAGE (BANK 1 SENSOR 1)

DTC DETECTING CONDITION:

- Immediately at fault recognition
- GENERAL DESCRIPTION <Ref. to GD(H4DOTC)-52, DTC P0131 O2 SENSOR CIRCUIT LOW VOLTAGE (BANK 1 SENSOR 1), Diagnostic Trouble Code (DTC) Detecting Criteria.>

CAUTION:
After servicing or replacing faulty parts, perform Clear Memory Mode <Ref. to EN(H4DOTC)(diag)-55, OPERATION, Clear Memory Mode.>, and Inspection Mode <Ref. to EN(H4DOTC)(diag)-44, PROCEDURE, Inspection Mode.>.

WIRING DIAGRAM:

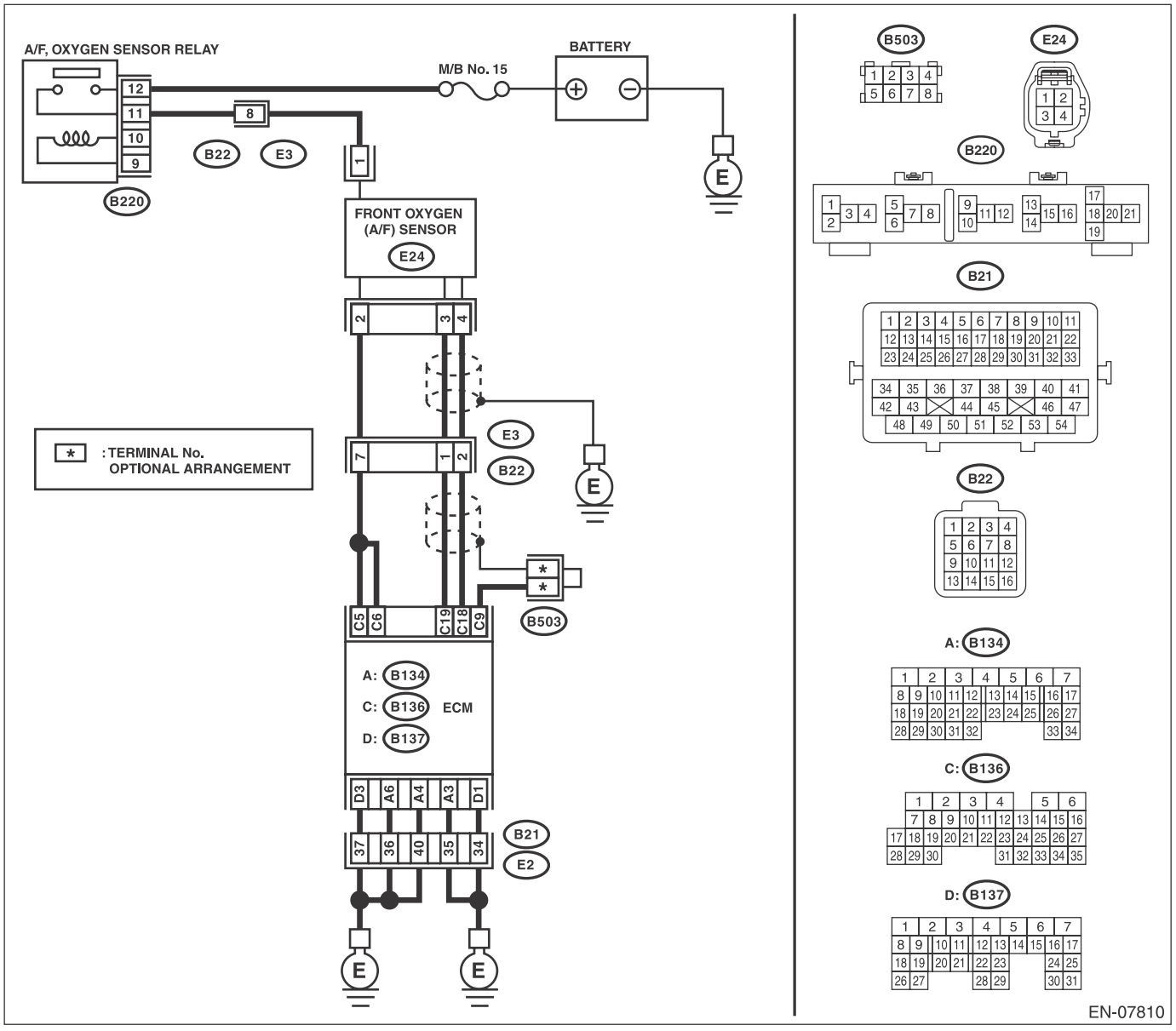

Step		Check	Yes	No
1	**CHECK FRONT OXYGEN (A/F) SENSOR CONNECTOR AND COUPLING CONNECTOR.**	Has water entered the connector?	Completely remove any water inside.	Go to step **2**.

	Step	Check	Yes	No
2	**CHECK HARNESS BETWEEN ECM AND FRONT OXYGEN (A/F) SENSOR CONNECTOR.** 1) Turn the ignition switch to OFF. 2) Disconnect the connector from ECM and front oxygen (A/F) sensor connector. 3) Measure the resistance between ECM and chassis ground. ***Connector & terminal*** ***(B136) No. 19 — Chassis ground:*** ***(B136) No. 18 — Chassis ground:***	Is the resistance 1 MΩ or more?	Go to step **3**.	Repair the ground short circuit of harness between ECM and front oxygen (A/F) sensor connector.
3	**CHECK FOR POOR CONTACT.** Check for poor contact of the front oxygen (A/F) sensor connector.	Is there poor contact of front oxygen (A/F) sensor connector?	Repair the poor contact of front oxygen (A/F) sensor connector.	Replace the front oxygen (A/F) sensor. <Ref. to FU(H4DOTC)-53, Front Oxygen (A/F) Sensor.>

AE:DTC P0132 O2 SENSOR CIRCUIT HIGH VOLTAGE (BANK 1 SENSOR 1)

DTC DETECTING CONDITION:

- Immediately at fault recognition
- GENERAL DESCRIPTION <Ref. to GD(H4DOTC)-54, DTC P0132 O2 SENSOR CIRCUIT HIGH VOLTAGE (BANK 1 SENSOR 1), Diagnostic Trouble Code (DTC) Detecting Criteria.>

CAUTION:
After servicing or replacing faulty parts, perform Clear Memory Mode <Ref. to EN(H4DOTC)(diag)-55, OPERATION, Clear Memory Mode.>, and Inspection Mode <Ref. to EN(H4DOTC)(diag)-44, PROCEDURE, Inspection Mode.>.

WIRING DIAGRAM:

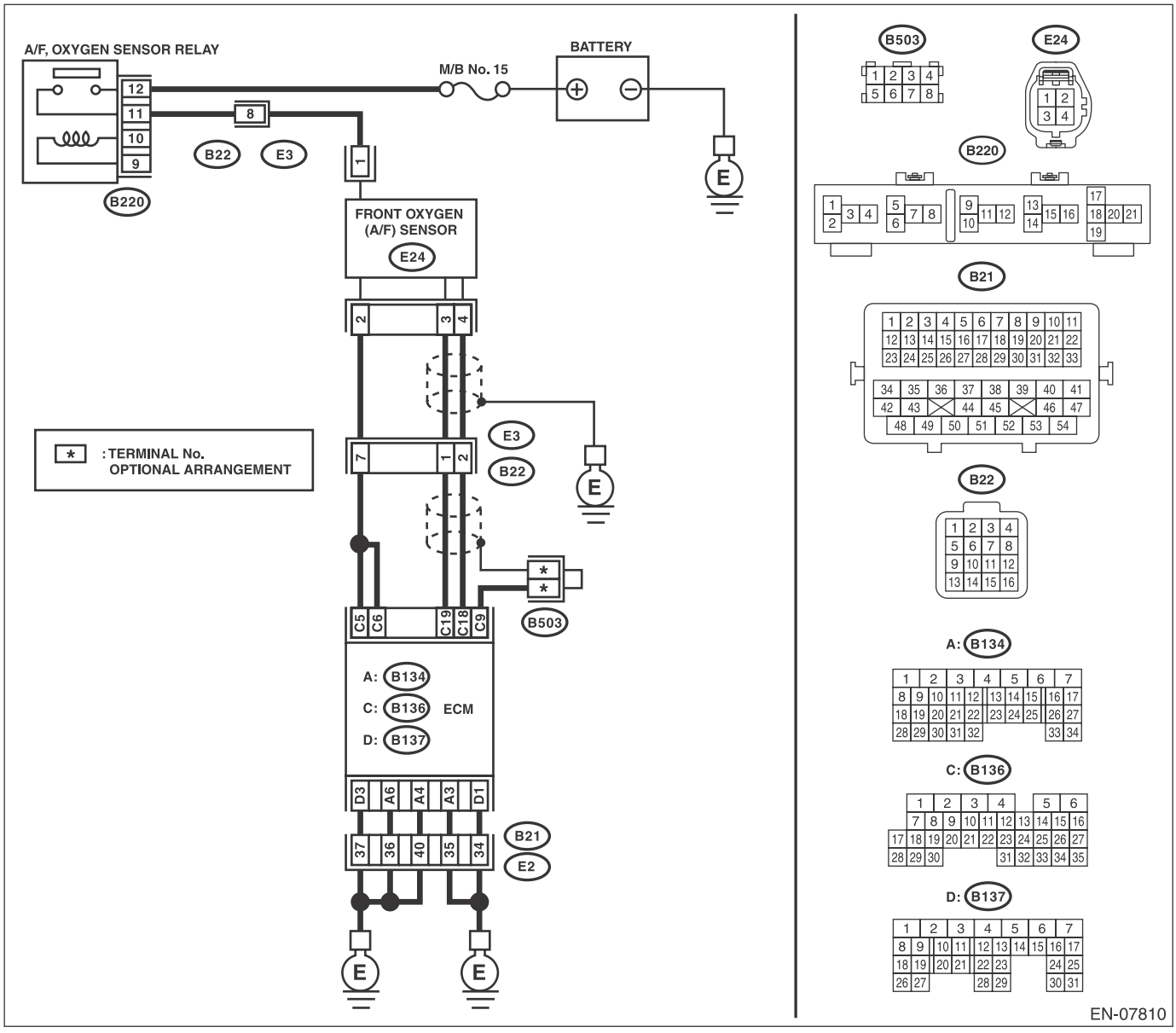

Step		Check	Yes	No
1	**CHECK FRONT OXYGEN (A/F) SENSOR CONNECTOR AND COUPLING CONNECTOR.**	Has water entered the connector?	Completely remove any water inside.	Go to step **2**.

	Step	Check	Yes	No
2	**CHECK HARNESS BETWEEN ECM AND FRONT OXYGEN (A/F) SENSOR CONNECTOR.** 1) Turn the ignition switch to OFF. 2) Disconnect the connector from front oxygen (A/F) sensor. 3) Turn the ignition switch to ON. 4) Measure the voltage between ECM and chassis ground. ***Connector & terminal*** ***(B136) No. 19 (+) — Chassis ground (–):*** ***(B136) No. 18 (+) — Chassis ground (–):***	Is the voltage 8 V or more?	Repair the short circuit of harness to power supply between ECM and front oxygen (A/F) sensor connector.	Replace the front oxygen (A/F) sensor. <Ref. to FU(H4DOTC)-53, Front Oxygen (A/F) Sensor.>

AF:DTC P0133 O2 SENSOR CIRCUIT SLOW RESPONSE (BANK 1 SENSOR 1)

DTC DETECTING CONDITION:

- Detected when two consecutive driving cycles with fault occur.
- GENERAL DESCRIPTION <Ref. to GD(H4DOTC)-56, DTC P0133 O2 SENSOR CIRCUIT SLOW RESPONSE (BANK 1 SENSOR 1), Diagnostic Trouble Code (DTC) Detecting Criteria.>

CAUTION:

After servicing or replacing faulty parts, perform Clear Memory Mode <Ref. to EN(H4DOTC)(diag)-55, OPERATION, Clear Memory Mode.>, and Inspection Mode <Ref. to EN(H4DOTC)(diag)-44, PROCEDURE, Inspection Mode.>.

WIRING DIAGRAM:

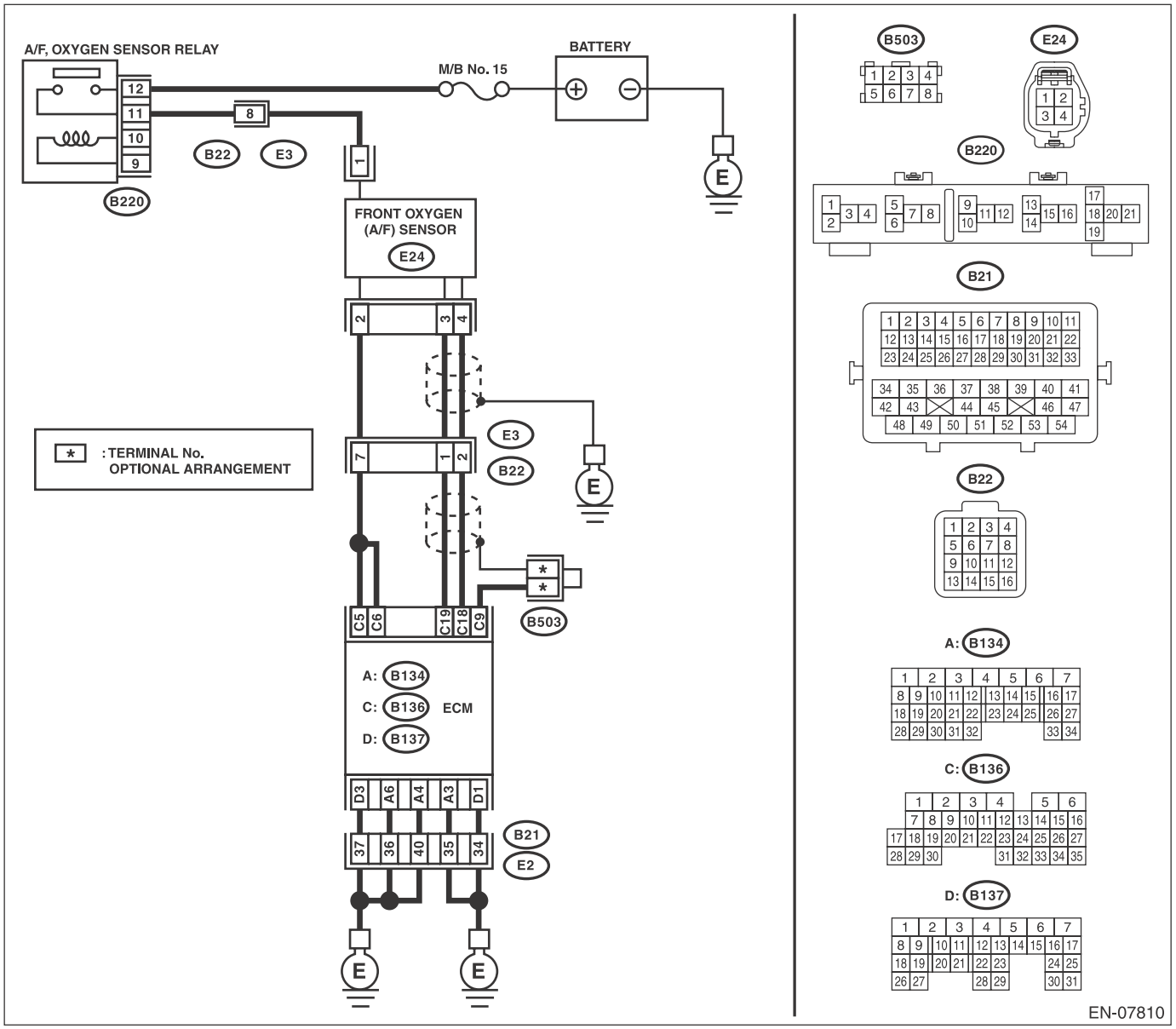

	Step	Check	Yes	No
1	**CHECK EXHAUST SYSTEM.** NOTE: Check the following items. • Loose installation of front portion of exhaust pipe onto cylinder heads • Loose connection between front exhaust pipe and front catalytic converter • Damage of exhaust pipe resulting in a hole	Is there any fault in exhaust system?	Repair the exhaust system.	Replace the front oxygen (A/F) sensor. <Ref. to FU(H4DOTC)-53, Front Oxygen (A/F) Sensor.>

AG:DTC P0134 O2 SENSOR CIRCUIT NO ACTIVITY DETECTED (BANK 1 SENSOR 1)

DTC DETECTING CONDITION:

- Immediately at fault recognition
- GENERAL DESCRIPTION <Ref. to GD(H4DOTC)-59, DTC P0134 O2 SENSOR CIRCUIT NO ACTIVITY DETECTED (BANK 1 SENSOR 1), Diagnostic Trouble Code (DTC) Detecting Criteria.>

CAUTION:

After servicing or replacing faulty parts, perform Clear Memory Mode <Ref. to EN(H4DOTC)(diag)-55, OPERATION, Clear Memory Mode.>, and Inspection Mode <Ref. to EN(H4DOTC)(diag)-44, PROCEDURE, Inspection Mode.>.

WIRING DIAGRAM:

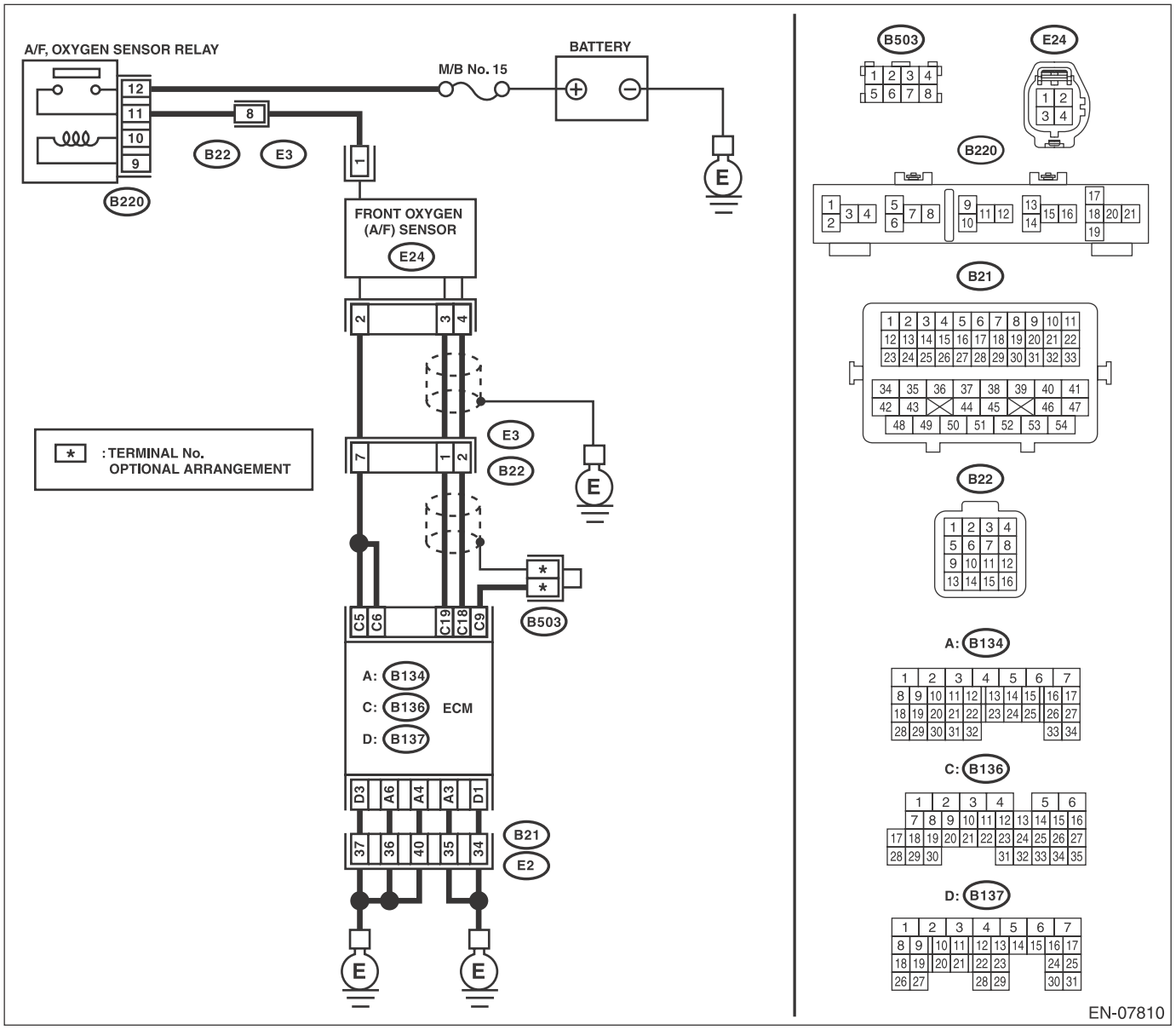

	Step	Check	Yes	No
1	**CHECK HARNESS BETWEEN ECM AND FRONT OXYGEN (A/F) SENSOR CONNECTOR.** 1) Turn the ignition switch to OFF. 2) Disconnect the connector from ECM and front oxygen (A/F) sensor connector. 3) Measure the resistance of harness between ECM and front oxygen (A/F) sensor connector. ***Connector & terminal*** ***(B136) No. 19 — (E24) No. 3:*** ***(B136) No. 18 — (E24) No. 4:***	Is the resistance less than 1 Ω?	Go to step **2**.	Repair the harness and connector. NOTE: In this case, repair the following item: • Open circuit in harness between ECM and front oxygen (A/F) sensor connector • Poor contact of coupling connector
2	**CHECK FOR POOR CONTACT.** Check for poor contact of ECM and front oxygen (A/F) sensor connector.	Is there poor contact of ECM or front oxygen (A/F) sensor connector?	Repair the poor contact of ECM or front oxygen (A/F) sensor connector.	Replace the front oxygen (A/F) sensor. <Ref. to FU(H4DOTC)-53, Front Oxygen (A/F) Sensor.>

AH:DTC P0137 O2 SENSOR CIRCUIT LOW VOLTAGE (BANK 1 SENSOR 2)

DTC DETECTING CONDITION:

- Detected when two consecutive driving cycles with fault occur.
- GENERAL DESCRIPTION <Ref. to GD(H4DOTC)-61, DTC P0137 O2 SENSOR CIRCUIT LOW VOLTAGE (BANK 1 SENSOR 2), Diagnostic Trouble Code (DTC) Detecting Criteria.>

CAUTION:

After servicing or replacing faulty parts, perform Clear Memory Mode <Ref. to EN(H4DOTC)(diag)-55, OPERATION, Clear Memory Mode.>, and Inspection Mode <Ref. to EN(H4DOTC)(diag)-44, PROCEDURE, Inspection Mode.>.

WIRING DIAGRAM:

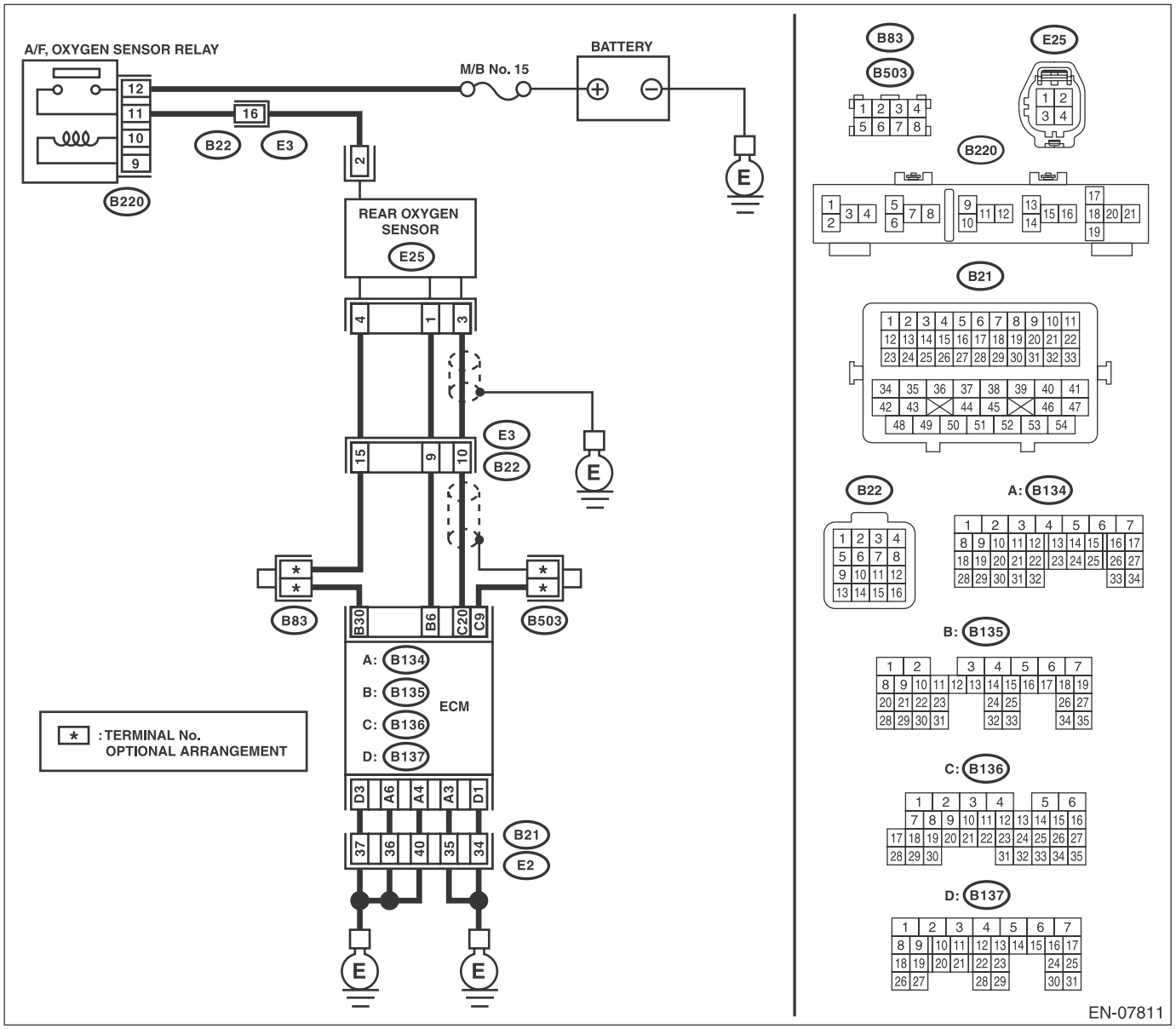

	Step	Check	Yes	No
1	**CHECK REAR OXYGEN SENSOR DATA.** 1) Warm up the engine until engine coolant temperature is above 75°C (167°F), and keep the engine speed at 3,000 rpm. (2 minutes maximum) 2) Read the data of rear oxygen sensor signal using Subaru Select Monitor or general scan tool. NOTE: • Subaru Select Monitor For detailed operation procedures, refer to "READ CURRENT DATA FOR ENGINE". <Ref. to EN(H4DOTC)(diag)-37, Subaru Select Monitor.> • General scan tool For detailed operation procedures, refer to the general scan tool operation manual.	Is the voltage 490 mV or more?	Go to step **5**.	Go to step **2**.
2	**CHECK REAR OXYGEN SENSOR CONNECTOR AND COUPLING CONNECTOR.**	Has water entered the connector?	Completely remove any water inside.	Go to step **3**.
3	**CHECK HARNESS BETWEEN ECM AND REAR OXYGEN SENSOR CONNECTOR.** 1) Turn the ignition switch to OFF. 2) Disconnect the connector from ECM and rear oxygen sensor. 3) Measure the resistance of harness between ECM and rear oxygen sensor connector. ***Connector & terminal*** ***(B136) No. 20 — (E25) No. 3:*** ***(B135) No. 30 — (E25) No. 4:***	Is the resistance less than 1 Ω?	Go to step **4**.	Repair the harness and connector. NOTE: In this case, repair the following item: • Open circuit in harness between ECM and rear oxygen sensor connector • Poor contact of coupling connector
4	**CHECK HARNESS BETWEEN ECM AND REAR OXYGEN SENSOR CONNECTOR.** 1) Connect the connector to ECM. 2) Turn the ignition switch to ON. 3) Measure the voltage between rear oxygen sensor connector and chassis ground. ***Connector & terminal*** ***(E25) No. 3 (+) — Chassis ground (–):***	Is the voltage 0.2 — 0.5 V?	Replace the rear oxygen sensor. <Ref. to FU(H4DOTC)-55, Rear Oxygen Sensor.>	Repair the harness and connector. NOTE: In this case, repair the following item: • Open circuit in harness between ECM and rear oxygen sensor connector • Poor contact of ECM connector • Poor contact of coupling connector
5	**CHECK EXHAUST SYSTEM.** Check exhaust system parts. NOTE: Check the following items. • Looseness and improper fitting of exhaust system parts • Damage (crack, hole etc.) of parts • Damage (crack, hole etc.) between front oxygen (A/F) sensor and rear oxygen sensor	Is there any fault in exhaust system?	Repair or replace faulty parts.	Replace the rear oxygen sensor. <Ref. to FU(H4DOTC)-55, Rear Oxygen Sensor.>

AI: DTC P0138 O2 SENSOR CIRCUIT HIGH VOLTAGE (BANK 1 SENSOR 2)

DTC DETECTING CONDITION:

- Detected when two consecutive driving cycles with fault occur.
- GENERAL DESCRIPTION <Ref. to GD(H4DOTC)-63, DTC P0138 O2 SENSOR CIRCUIT HIGH VOLTAGE (BANK 1 SENSOR 2), Diagnostic Trouble Code (DTC) Detecting Criteria.>

CAUTION:

After servicing or replacing faulty parts, perform Clear Memory Mode <Ref. to EN(H4DOTC)(diag)-55, OPERATION, Clear Memory Mode.>, and Inspection Mode <Ref. to EN(H4DOTC)(diag)-44, PROCEDURE, Inspection Mode.>.

WIRING DIAGRAM:

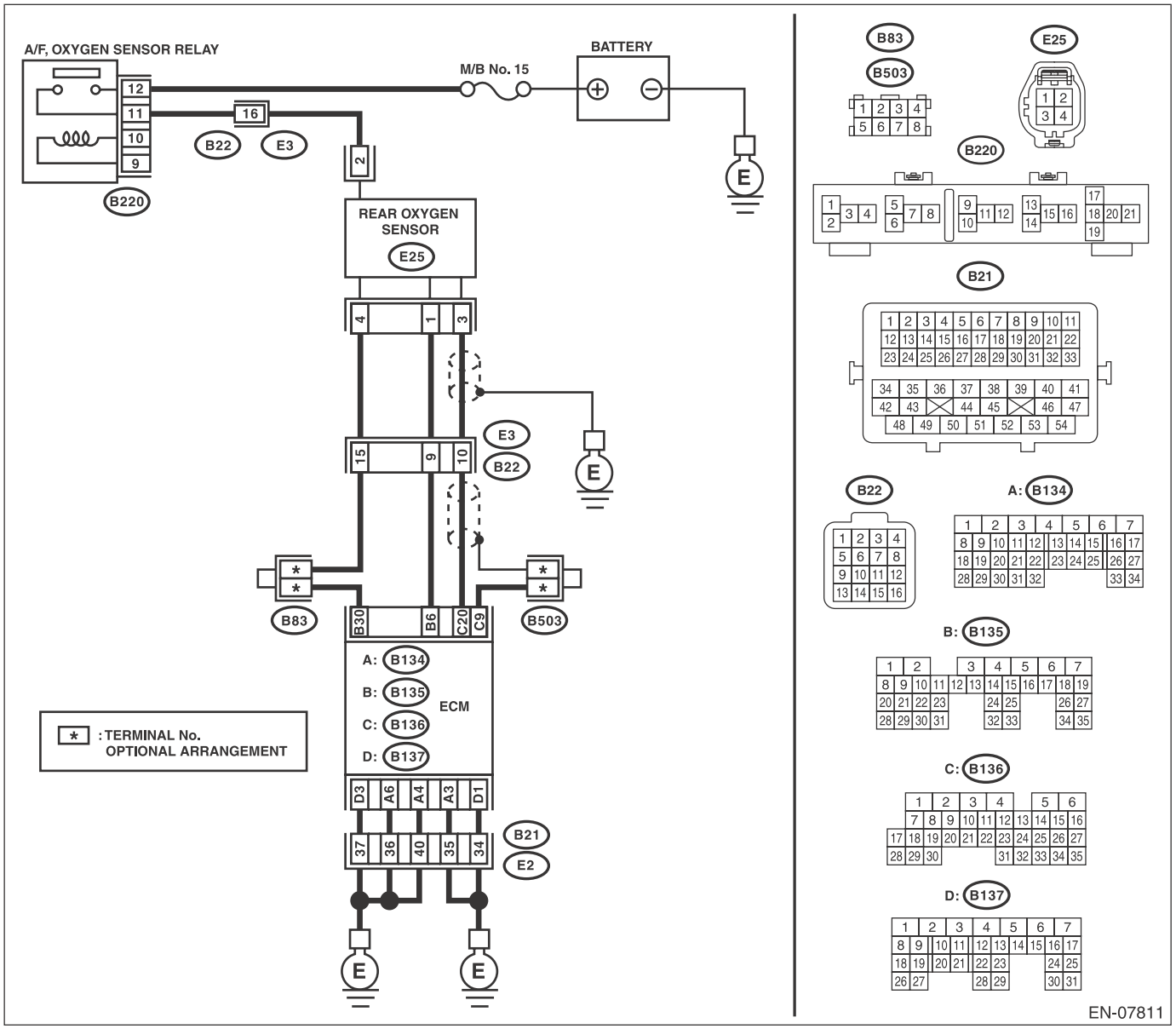

	Step	Check	Yes	No
1	**CHECK REAR OXYGEN SENSOR DATA.** 1) Warm up the engine until engine coolant temperature is above 75°C (167°F), and rapidly reduce the engine speed from 3,000 rpm. 2) Read the data of rear oxygen sensor signal using Subaru Select Monitor or general scan tool. NOTE: • Subaru Select Monitor For detailed operation procedures, refer to "READ CURRENT DATA FOR ENGINE". <Ref. to EN(H4DOTC)(diag)-37, Subaru Select Monitor.> • General scan tool For detailed operation procedures, refer to the general scan tool operation manual.	Is the voltage 250 mV or less?	Go to step **5**.	Go to step **2**.
2	**CHECK REAR OXYGEN SENSOR CONNECTOR AND COUPLING CONNECTOR.**	Has water entered the connector?	Completely remove any water inside.	Go to step **3**.
3	**CHECK HARNESS BETWEEN ECM AND REAR OXYGEN SENSOR CONNECTOR.** 1) Turn the ignition switch to OFF. 2) Disconnect the connector from ECM and rear oxygen sensor. 3) Measure the resistance of harness between ECM and rear oxygen sensor connector. ***Connector & terminal*** ***(B136) No. 20 — (E25) No. 3:*** ***(B135) No. 30 — (E25) No. 4:***	Is the resistance less than 1 Ω?	Go to step **4**.	Repair the harness and connector. NOTE: In this case, repair the following item: • Open circuit in harness between ECM and rear oxygen sensor connector • Poor contact of coupling connector
4	**CHECK HARNESS BETWEEN ECM AND REAR OXYGEN SENSOR CONNECTOR.** 1) Connect the connector to ECM. 2) Turn the ignition switch to ON. 3) Measure the voltage between rear oxygen sensor connector and chassis ground. ***Connector & terminal*** ***(E25) No. 3 (+) — Chassis ground (–):***	Is the voltage 0.2 — 0.5 V?	Replace the rear oxygen sensor. <Ref. to FU(H4DOTC)-55, Rear Oxygen Sensor.>	Repair the harness and connector. NOTE: In this case, repair the following item: • Open circuit in harness between ECM and rear oxygen sensor connector • Poor contact of ECM connector • Poor contact of coupling connector
5	**CHECK EXHAUST SYSTEM.** Check exhaust system parts. NOTE: Check the following items. • Looseness and improper fitting of exhaust system parts • Damage (crack, hole etc.) of parts • Damage (crack, hole etc.) between front oxygen (A/F) sensor and rear oxygen sensor	Is there any fault in exhaust system?	Repair or replace faulty parts.	Replace the rear oxygen sensor. <Ref. to FU(H4DOTC)-55, Rear Oxygen Sensor.>

AJ:DTC P0139 O2 SENSOR CIRCUIT SLOW RESPONSE (BANK 1 SENSOR 2)

DTC DETECTING CONDITION:

- Detected when two consecutive driving cycles with fault occur.
- GENERAL DESCRIPTION <Ref. to GD(H4DOTC)-64, DTC P0139 O2 SENSOR CIRCUIT SLOW RESPONSE (BANK 1 SENSOR 2), Diagnostic Trouble Code (DTC) Detecting Criteria.>

CAUTION:

After servicing or replacing faulty parts, perform Clear Memory Mode <Ref. to EN(H4DOTC)(diag)-55, OPERATION, Clear Memory Mode.>, and Inspection Mode <Ref. to EN(H4DOTC)(diag)-44, PROCEDURE, Inspection Mode.>.

WIRING DIAGRAM:

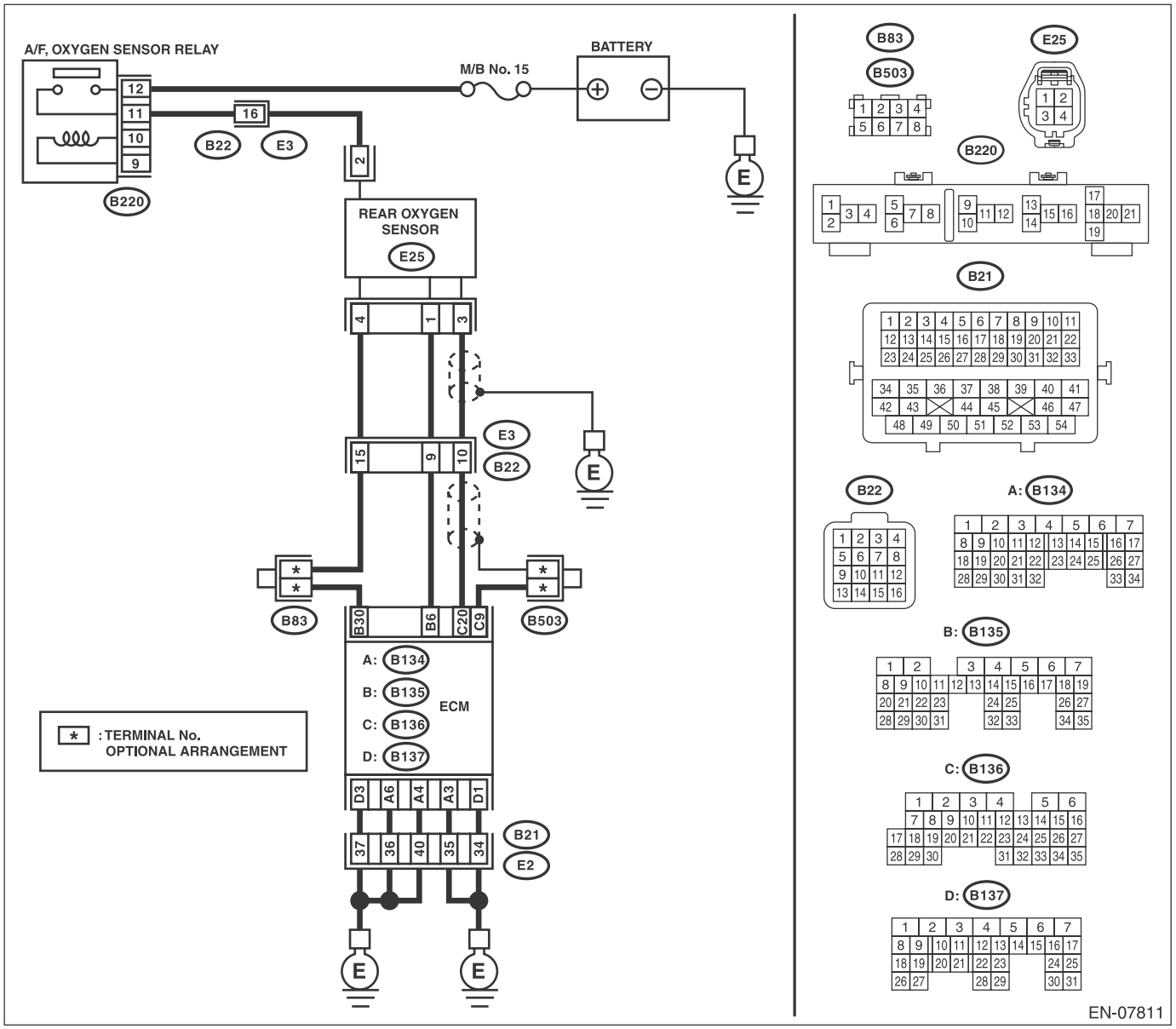

	Step	Check	Yes	No
1	**CHECK HARNESS BETWEEN ECM AND REAR OXYGEN SENSOR CONNECTOR.** 1) Turn the ignition switch to OFF. 2) Disconnect the connector from ECM and rear oxygen sensor. 3) Measure the resistance of harness between ECM and rear oxygen sensor connector. ***Connector & terminal*** ***(B136) No. 20 — (E25) No. 3:***	Is the resistance less than 1 Ω?	Go to step **2**.	Repair the harness and connector. NOTE: In this case, repair the following item: • Open circuit in harness between ECM and rear oxygen sensor connector • Poor contact of coupling connector
2	**CHECK HARNESS BETWEEN ECM AND REAR OXYGEN SENSOR CONNECTOR.** Measure the resistance between rear oxygen sensor connector and chassis ground. ***Connector & terminal*** ***(E25) No. 3 — Chassis ground:***	Is the resistance 1 MΩ or more?	Go to step **3**.	Repair the ground short circuit of harness between ECM and rear oxygen sensor connector.
3	**CHECK REAR OXYGEN SENSOR.** Measure the resistance between rear oxygen sensor terminals. ***Terminals*** ***No. 3 — No. 4***	Is the resistance less than 1 Ω?	Replace the rear oxygen sensor. <Ref. to FU(H4DOTC)-55, Rear Oxygen Sensor.>	Even if DTC is detected, the circuit has returned to a normal condition at this time. Reproduce the failure, and then perform the diagnosis again. NOTE: In this case, temporary poor contact of connector, temporary open or short circuit of harness may be the cause.

AK:DTC P0140 O2 SENSOR CIRCUIT NO ACTIVITY DETECTED (BANK1 SENSOR2)

DTC DETECTING CONDITION:

- Detected when two consecutive driving cycles with fault occur.
- GENERAL DESCRIPTION <Ref. to GD(H4DOTC)-72, DTC P0140 O2 SENSOR CIRCUIT NO ACTIVITY DETECTED (BANK1 SENSOR2), Diagnostic Trouble Code (DTC) Detecting Criteria.>

CAUTION:

After servicing or replacing faulty parts, perform Clear Memory Mode <Ref. to EN(H4DOTC)(diag)-55, OPERATION, Clear Memory Mode.>, and Inspection Mode <Ref. to EN(H4DOTC)(diag)-44, PROCEDURE, Inspection Mode.>.

WIRING DIAGRAM:

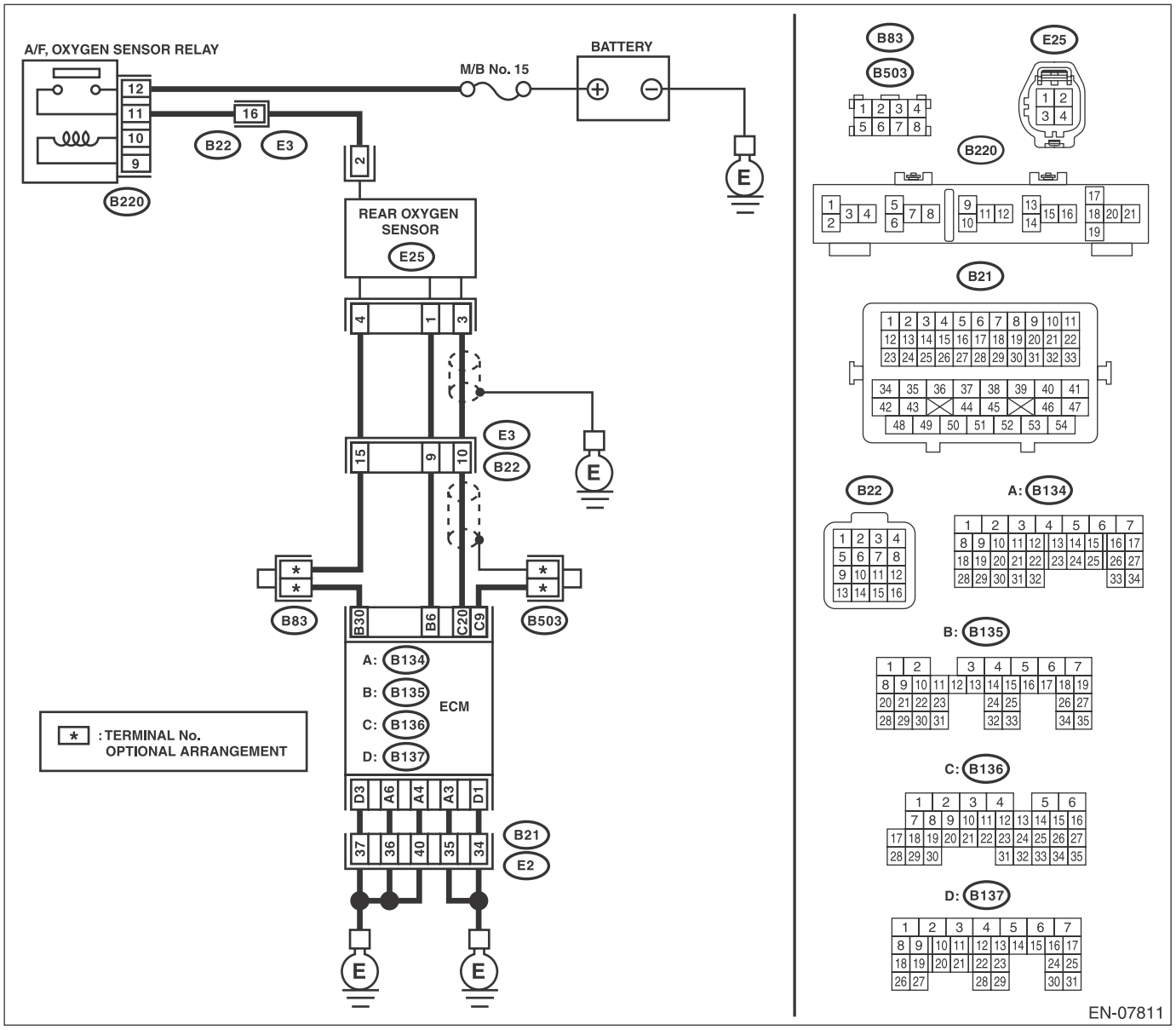

	Step	Check	Yes	No
1	**CHECK REAR OXYGEN SENSOR DATA.** 1) Warm up the engine until engine coolant temperature is above 75°C (167°F), and keep the engine speed at 3,000 rpm. (2 minutes maximum) 2) Read the data of rear oxygen sensor signal using Subaru Select Monitor or general scan tool. NOTE: • Subaru Select Monitor For detailed operation procedures, refer to "READ CURRENT DATA FOR ENGINE". <Ref. to EN(H4DOTC)(diag)-37, Subaru Select Monitor.> • General scan tool For detailed operation procedures, refer to the general scan tool operation manual.	Is the voltage 490 mV or more?	Go to step **6.**	Go to step **2.**
2	**CHECK REAR OXYGEN SENSOR DATA.** 1) Warm up the engine until engine coolant temperature is above 75°C (167°F), and rapidly reduce the engine speed from 3,000 rpm. 2) Read the data of rear oxygen sensor signal using Subaru Select Monitor or general scan tool. NOTE: • Subaru Select Monitor For detailed operation procedures, refer to "READ CURRENT DATA FOR ENGINE". <Ref. to EN(H4DOTC)(diag)-37, Subaru Select Monitor.> • General scan tool For detailed operation procedures, refer to the general scan tool operation manual.	Is the voltage 250 mV or less?	Go to step **6.**	Go to step **3.**
3	**CHECK REAR OXYGEN SENSOR CONNECTOR AND COUPLING CONNECTOR.**	Has water entered the connector?	Completely remove any water inside.	Go to step **4.**
4	**CHECK HARNESS BETWEEN ECM AND REAR OXYGEN SENSOR CONNECTOR.** 1) Turn the ignition switch to OFF. 2) Disconnect the connector from ECM and rear oxygen sensor. 3) Measure the resistance of harness between ECM and rear oxygen sensor connector. ***Connector & terminal*** ***(B136) No. 20 — (E25) No. 3:*** ***(B135) No. 30 — (E25) No. 4:***	Is the resistance less than 1 Ω?	Go to step **5.**	Repair the harness and connector. NOTE: In this case, repair the following item: • Open circuit in harness between ECM and rear oxygen sensor connector • Poor contact of coupling connector

	Step	Check	Yes	No
5	**CHECK HARNESS BETWEEN ECM AND REAR OXYGEN SENSOR CONNECTOR.** 1) Connect the connector to ECM. 2) Turn the ignition switch to ON. 3) Measure the voltage between rear oxygen sensor connector and chassis ground. ***Connector & terminal*** ***(E25) No. 3 (+) — Chassis ground (–):***	Is the voltage 0.2 — 0.5 V?	Replace the rear oxygen sensor. <Ref. to FU(H4DOTC)-55, Rear Oxygen Sensor.>	Repair the harness and connector. NOTE: In this case, repair the following item: • Open circuit in harness between ECM and rear oxygen sensor connector • Poor contact of ECM connector • Poor contact of coupling connector
6	**CHECK EXHAUST SYSTEM.** Check exhaust system parts. NOTE: Check the following items. • Looseness and improper fitting of exhaust system parts • Damage (crack, hole etc.) of parts • Damage (crack, hole etc.) between front oxygen (A/F) sensor and rear oxygen sensor	Is there any fault in exhaust system?	Repair or replace faulty parts.	Replace the rear oxygen sensor. <Ref. to FU(H4DOTC)-55, Rear Oxygen Sensor.>

AL:DTC P0141 O2 SENSOR HEATER CIRCUIT (BANK1 SENSOR2)

Refer to DTC P0037 for diagnostic procedure. <Ref. to EN(H4DOTC)(diag)-100, DTC P0037 HO2S HEATER CONTROL CIRCUIT LOW (BANK 1 SENSOR 2), Diagnostic Procedure with Diagnostic Trouble Code (DTC).>

AM:DTC P0171 SYSTEM TOO LEAN (BANK 1)

Refer to DTC P0172 for diagnostic procedure. <Ref. to EN(H4DOTC)(diag)-151, DTC P0172 SYSTEM TOO RICH (BANK 1), Diagnostic Procedure with Diagnostic Trouble Code (DTC).>

AN:DTC P0172 SYSTEM TOO RICH (BANK 1)

DTC DETECTING CONDITION:

- Detected when two consecutive driving cycles with fault occur.
- GENERAL DESCRIPTION <Ref. to GD(H4DOTC)-77, DTC P0172 SYSTEM TOO RICH (BANK 1), Diagnostic Trouble Code (DTC) Detecting Criteria.>

TROUBLE SYMPTOM:

- Improper idling
- Engine stalls.
- Poor driving performance

CAUTION:
After servicing or replacing faulty parts, perform Clear Memory Mode <Ref. to EN(H4DOTC)(diag)-55, OPERATION, Clear Memory Mode.>, and Inspection Mode <Ref. to EN(H4DOTC)(diag)-44, PROCEDURE, Inspection Mode.>.

	Step	Check	Yes	No
1	**CHECK EXHAUST SYSTEM.**	Are there holes or loose bolts on exhaust system?	Repair the exhaust system.	Go to step **2**.
2	**CHECK AIR INTAKE SYSTEM.**	Are there holes, loose bolts or disconnection of hose on air intake system?	Repair the air intake system.	Go to step **3**.
3	**CHECK FUEL PRESSURE.** **WARNING:** **Place "NO OPEN FLAMES" signs near the working area.** **CAUTION:** **Be careful not to spill fuel.** Measure the fuel pressure while disconnecting pressure regulator vacuum hose from intake manifold. <Ref. to ME(H4DOTC)-26, INSPECTION, Fuel Pressure.> **CAUTION:** **Release fuel pressure before removing the fuel pressure gauge.** NOTE: If fuel pressure does not increase, squeeze the fuel return hose 2 to 3 times, then measure fuel pressure again.	Is the measured value 284 — 314 kPa (2.9 — 3.2 kg/cm^2, 41 — 46 psi)?	Go to step **4**.	Repair the following item. Fuel pressure is too high: • Clogged fuel return line or bent hose Fuel pressure is too low: • Improper fuel pump discharge • Clogged fuel supply line
4	**CHECK FUEL PRESSURE.** After connecting the pressure regulator vacuum hose, measure fuel pressure. <Ref. to ME(H4DOTC)-26, INSPECTION, Fuel Pressure.> **CAUTION:** **Release fuel pressure before removing the fuel pressure gauge.** NOTE: • If fuel pressure does not increase, squeeze fuel return hose 2 to 3 times, then measure fuel pressure again. • If the measured value at this step is out of specification, check or replace pressure regulator and pressure regulator vacuum hose.	Is the measured value 230 — 260 kPa (2.35 — 2.65 kg/cm^2, 33 — 38 psi)?	Go to step **5**.	Repair the following item. Fuel pressure is too high: • Faulty pressure regulator • Clogged fuel return line or bent hose Fuel pressure is too low: • Faulty pressure regulator • Improper fuel pump discharge • Clogged fuel supply line

	Step	Check	Yes	No
5	**CHECK ENGINE COOLANT TEMPERATURE SENSOR.** 1) Start the engine and warm up completely. 2) Read the data of engine coolant temperature sensor signal using Subaru Select Monitor or general scan tool. NOTE: • Subaru Select Monitor For detailed operation procedures, refer to "READ CURRENT DATA FOR ENGINE". <Ref. to EN(H4DOTC)(diag)-37, Subaru Select Monitor.> • General scan tool For detailed operation procedures, refer to the general scan tool operation manual.	Is the temperature 75°C (167°F) or more?	Go to step **6**.	Replace the engine coolant temperature sensor. <Ref. to FU(H4DOTC)-32, Engine Coolant Temperature Sensor.>
6	**CHECK MASS AIR FLOW AND INTAKE AIR TEMPERATURE SENSOR.** 1) Start the engine and warm up engine until coolant temperature is higher than 75°C (167°F). 2) Place the shift lever in neutral position. 3) Turn the A/C switch to OFF. 4) Turn all the accessory switches to OFF. 5) Read the data of mass air flow and intake air temperature sensor signal using Subaru Select Monitor or general scan tool. NOTE: • Subaru Select Monitor For detailed operation procedures, refer to "READ CURRENT DATA FOR ENGINE". <Ref. to EN(H4DOTC)(diag)-37, Subaru Select Monitor.> • General scan tool For detailed operation procedures, refer to the general scan tool operation manual.	Is the measured value 2.0 — 5.0 g/s (0.26 — 0.66 lb/m)?	Go to step **7**.	Replace the mass air flow and intake air temperature sensor. <Ref. to FU(H4DOTC)-40, Mass Air Flow and Intake Air Temperature Sensor.>
7	**CHECK MASS AIR FLOW AND INTAKE AIR TEMPERATURE SENSOR.** 1) Start the engine and warm up engine until coolant temperature is higher than 75°C (167°F). 2) Place the shift lever in neutral position. 3) Turn the A/C switch to OFF. 4) Turn all the accessory switches to OFF. 5) Open the front hood. 6) Measure the ambient temperature. 7) Read the data of mass air flow and intake air temperature sensor signal using Subaru Select Monitor or general scan tool. NOTE: • Subaru Select Monitor For detailed operation procedures, refer to "READ CURRENT DATA FOR ENGINE". <Ref. to EN(H4DOTC)(diag)-37, Subaru Select Monitor.> • General scan tool For detailed operation procedures, refer to the general scan tool operation manual.	Subtract ambient temperature from intake air temperature. Is the obtained value –10 — 50°C (–18 — 90°F)?	Repair the poor contact of ECM connector.	Check the mass air flow and intake air temperature sensor. <Ref. to FU(H4DOTC)-40, Mass Air Flow and Intake Air Temperature Sensor.>

AO:DTC P0181 FUEL TEMPERATURE SENSOR “A” CIRCUIT RANGE/PERFORMANCE

DTC DETECTING CONDITION:

- Detected when two consecutive driving cycles with fault occur.
- GENERAL DESCRIPTION <Ref. to GD(H4DOTC)-78, DTC P0181 FUEL TEMPERATURE SENSOR “A” CIRCUIT RANGE/PERFORMANCE, Diagnostic Trouble Code (DTC) Detecting Criteria.>

CAUTION:

After servicing or replacing faulty parts, perform Clear Memory Mode <Ref. to EN(H4DOTC)(diag)-55, OPERATION, Clear Memory Mode.>, and Inspection Mode <Ref. to EN(H4DOTC)(diag)-44, PROCEDURE, Inspection Mode.>.

WIRING DIAGRAM:

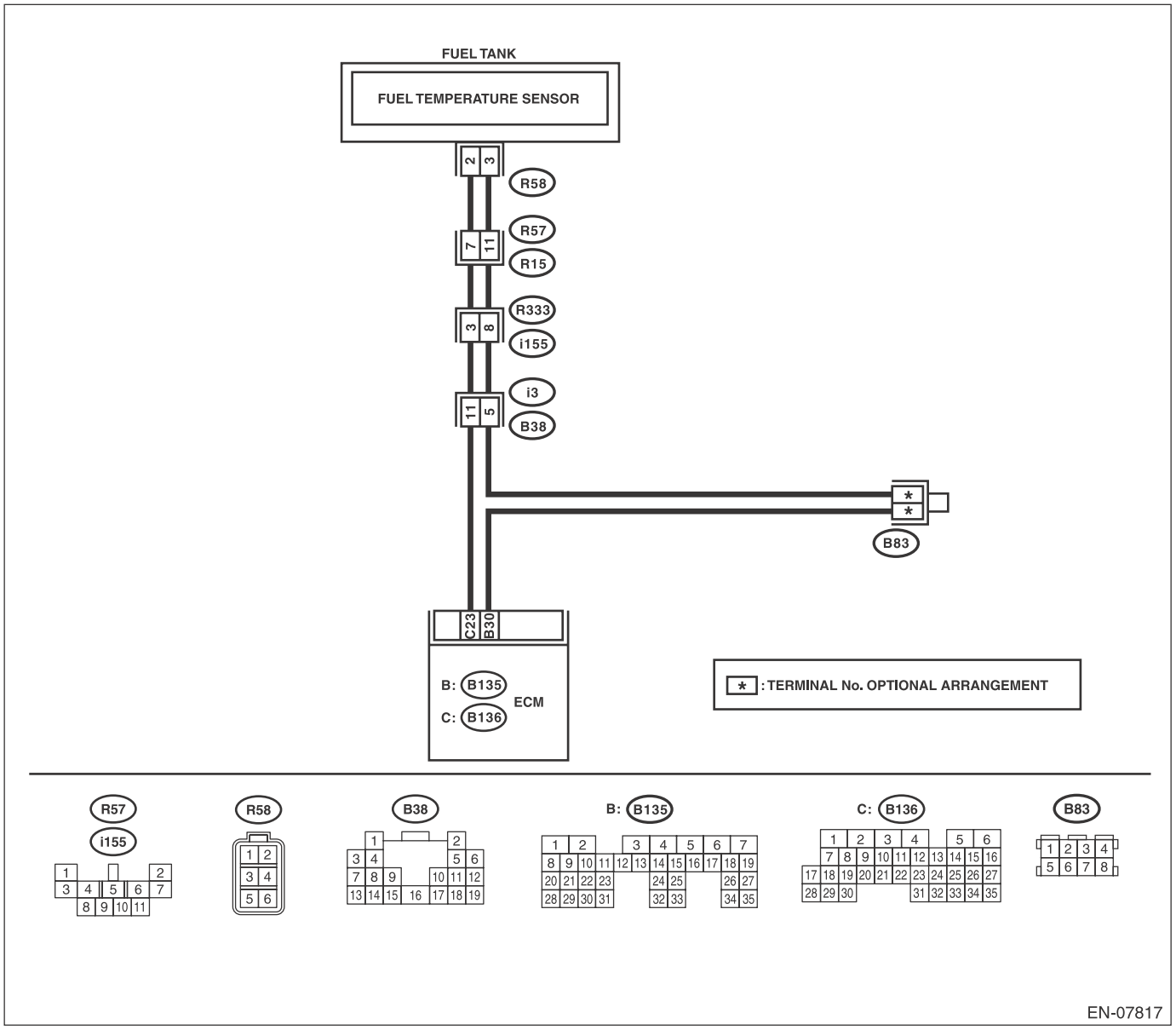

Step		Check	Yes	No
1	**CHECK FOR ANY OTHER DTC ON DISPLAY.**	Is any other DTC displayed?	Check the appropriate DTC using the “List of Diagnostic Trouble Code (DTC)”. <Ref. to EN(H4DOTC)(diag)-78, List of Diagnostic Trouble Code (DTC).>	Replace the fuel temperature sensor. <Ref. to EC(H4DOTC)-15, Fuel Temperature Sensor.>

AP:DTC P0182 FUEL TEMPERATURE SENSOR “A” CIRCUIT LOW INPUT

DTC DETECTING CONDITION:

- Immediately at fault recognition
- GENERAL DESCRIPTION <Ref. to GD(H4DOTC)-81, DTC P0182 FUEL TEMPERATURE SENSOR “A” CIRCUIT LOW INPUT, Diagnostic Trouble Code (DTC) Detecting Criteria.>

CAUTION:

After servicing or replacing faulty parts, perform Clear Memory Mode <Ref. to EN(H4DOTC)(diag)-55, OPERATION, Clear Memory Mode.>, and Inspection Mode <Ref. to EN(H4DOTC)(diag)-44, PROCEDURE, Inspection Mode.>.

WIRING DIAGRAM:

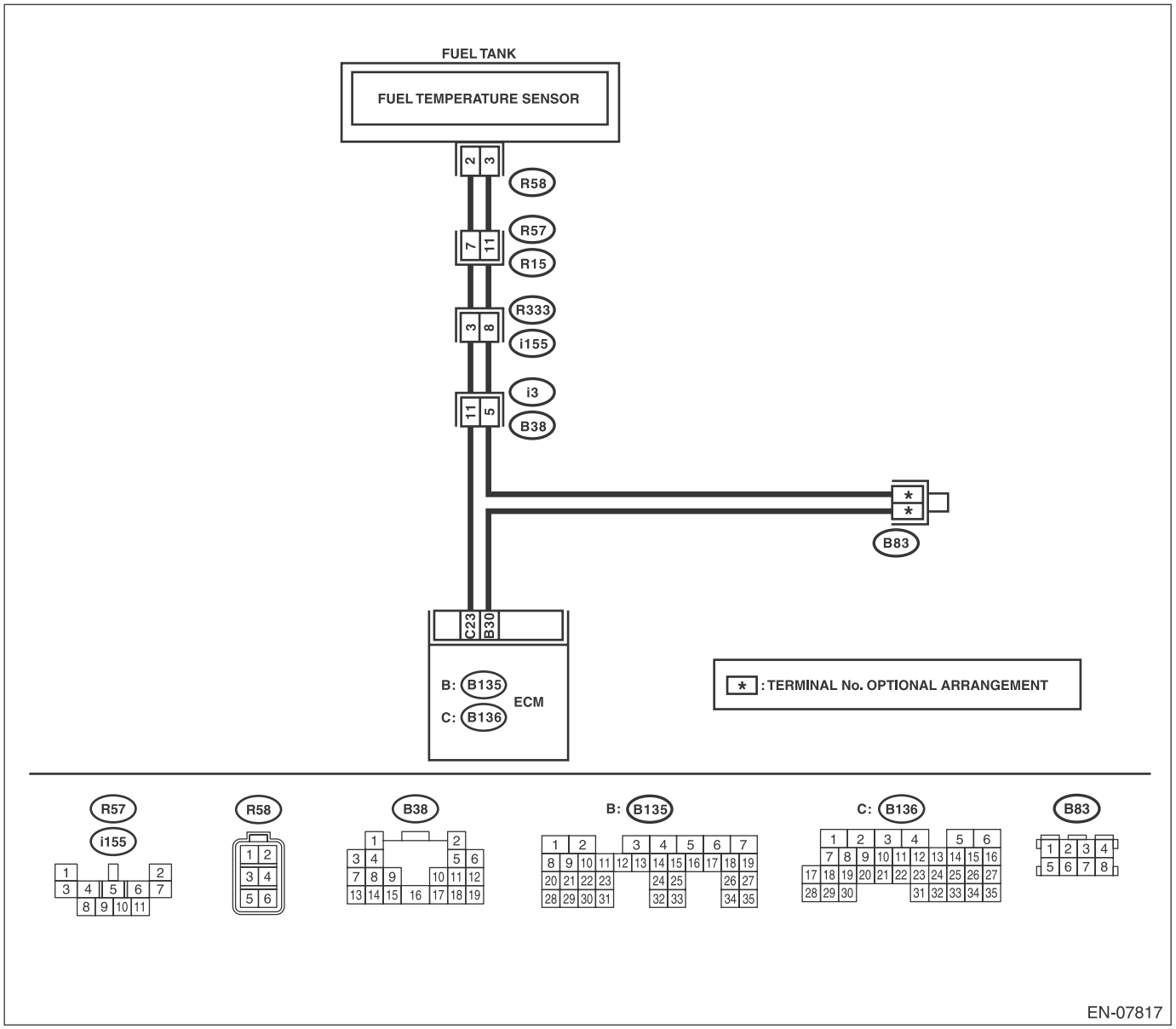

	Step	Check	Yes	No
1	**CHECK CURRENT DATA.** 1) Start the engine. 2) Read the data of fuel temperature sensor signal using Subaru Select Monitor. NOTE: For detailed operation procedures, refer to "READ CURRENT DATA FOR ENGINE". <Ref. to EN(H4DOTC)(diag)-37, Subaru Select Monitor.>	Is the temperature 120°C (248°F) or higher?	Go to step **2**.	Even if DTC is detected, the circuit has returned to a normal condition at this time. Reproduce the failure, and then perform the diagnosis again. NOTE: In this case, temporary poor contact of connector, temporary open or short circuit of harness may be the cause.
2	**CHECK HARNESS BETWEEN ECM AND FUEL TEMPERATURE SENSOR CONNECTOR.** 1) Turn the ignition switch to OFF. 2) Disconnect the connector from ECM and fuel temperature sensor. 3) Measure the resistance between ECM and chassis ground. ***Connector & terminal*** ***(B136) No. 23 — Chassis ground:***	Is the resistance 1 MΩ or more?	Replace the fuel temperature sensor. <Ref. to EC(H4DOTC)-15, Fuel Temperature Sensor.>	Repair the ground short circuit of harness between ECM and fuel pump connector.

AQ:DTC P0183 FUEL TEMPERATURE SENSOR “A” CIRCUIT HIGH INPUT

DTC DETECTING CONDITION:

- Immediately at fault recognition
- GENERAL DESCRIPTION <Ref. to GD(H4DOTC)-82, DTC P0183 FUEL TEMPERATURE SENSOR “A” CIRCUIT HIGH INPUT, Diagnostic Trouble Code (DTC) Detecting Criteria.>

CAUTION:

After servicing or replacing faulty parts, perform Clear Memory Mode <Ref. to EN(H4DOTC)(diag)-55, OPERATION, Clear Memory Mode.>, and Inspection Mode <Ref. to EN(H4DOTC)(diag)-44, PROCEDURE, Inspection Mode.>.

WIRING DIAGRAM:

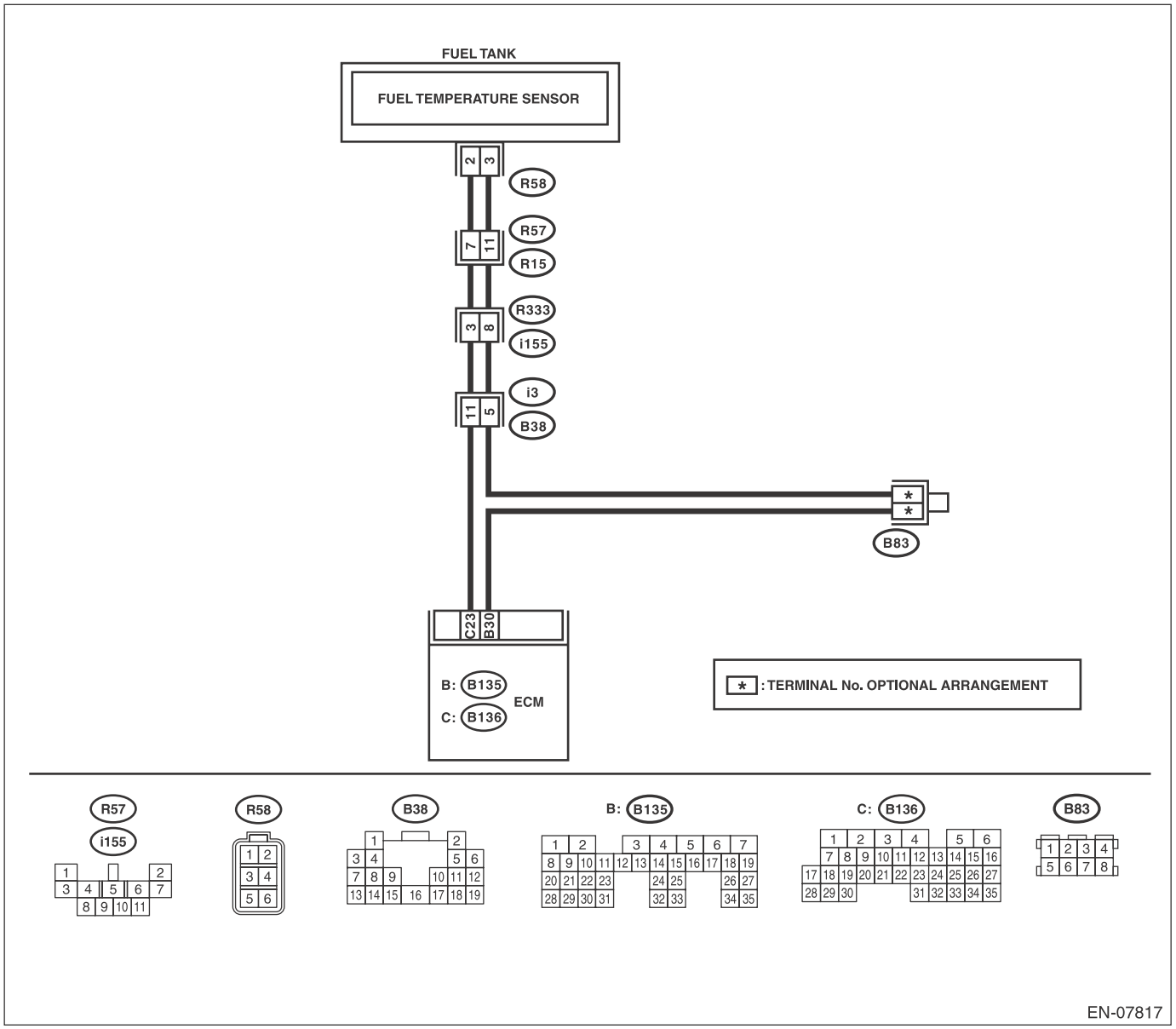

	Step	Check	Yes	No
1	**CHECK CURRENT DATA.** 1) Start the engine. 2) Read the data of fuel temperature sensor signal using Subaru Select Monitor. NOTE: For detailed operation procedures, refer to "READ CURRENT DATA FOR ENGINE". <Ref. to EN(H4DOTC)(diag)-37, Subaru Select Monitor.>	Is the temperature less than –40°C (–40°F)?	Go to step **2**.	Even if DTC is detected, the circuit has returned to a normal condition at this time. Reproduce the failure, and then perform the diagnosis again. NOTE: In this case, temporary poor contact of connector, temporary open or short circuit of harness may be the cause.
2	**CHECK FOR POOR CONTACT.** Repair any poor contact between the ECM and fuel temperature sensor connectors.	Is there poor contact of the ECM or fuel temperature sensor connectors?	Repair any poor contact between the ECM and fuel temperature sensor connectors.	Go to step **3**.
3	**CHECK HARNESS BETWEEN ECM AND FUEL TEMPERATURE SENSOR CONNECTOR.** 1) Turn the ignition switch to OFF. 2) Disconnect the connector from ECM and fuel temperature sensor. 3) Measure the resistance of the harness between the ECM and fuel temperature sensor connector. ***Connector & terminal*** ***(B136) No. 23 — (R58) No. 2:*** ***(B135) No. 30 — (R58) No. 3:***	Is the resistance less than 1 Ω?	Go to step **4**.	Repair the harness and connector. NOTE: In this case, repair the following item: • Open circuit in harness between ECM and fuel temperature sensor connector • Poor contact of coupling connector
4	**CHECK HARNESS BETWEEN ECM AND FUEL TEMPERATURE SENSOR CONNECTOR.** 1) Connect all connectors. 2) Turn the ignition switch to ON. 3) Measure the voltage between ECM and chassis ground. ***Connector & terminal*** ***(B136) No. 23 (+) — Chassis ground (–):***	Is the voltage 5 V or more?	Repair the short circuit to power in the harness between the ECM and fuel temperature sensor connector.	Replace the fuel temperature sensor. <Ref. to EC(H4DOTC)-15, Fuel Temperature Sensor.>

AR:DTC P0222 THROTTLE/PEDAL POSITION SENSOR/SWITCH “B” CIRCUIT LOW

DTC DETECTING CONDITION:

- Immediately at fault recognition
- GENERAL DESCRIPTION <Ref. to GD(H4DOTC)-83, DTC P0222 THROTTLE/PEDAL POSITION SENSOR/SWITCH “B” CIRCUIT LOW, Diagnostic Trouble Code (DTC) Detecting Criteria.>

TROUBLE SYMPTOM:

- Improper idling
- Poor driving performance
- Engine stalls.

CAUTION:

After servicing or replacing faulty parts, perform Clear Memory Mode <Ref. to EN(H4DOTC)(diag)-55, OPERATION, Clear Memory Mode.>, and Inspection Mode <Ref. to EN(H4DOTC)(diag)-44, PROCEDURE, Inspection Mode.>.

WIRING DIAGRAM:

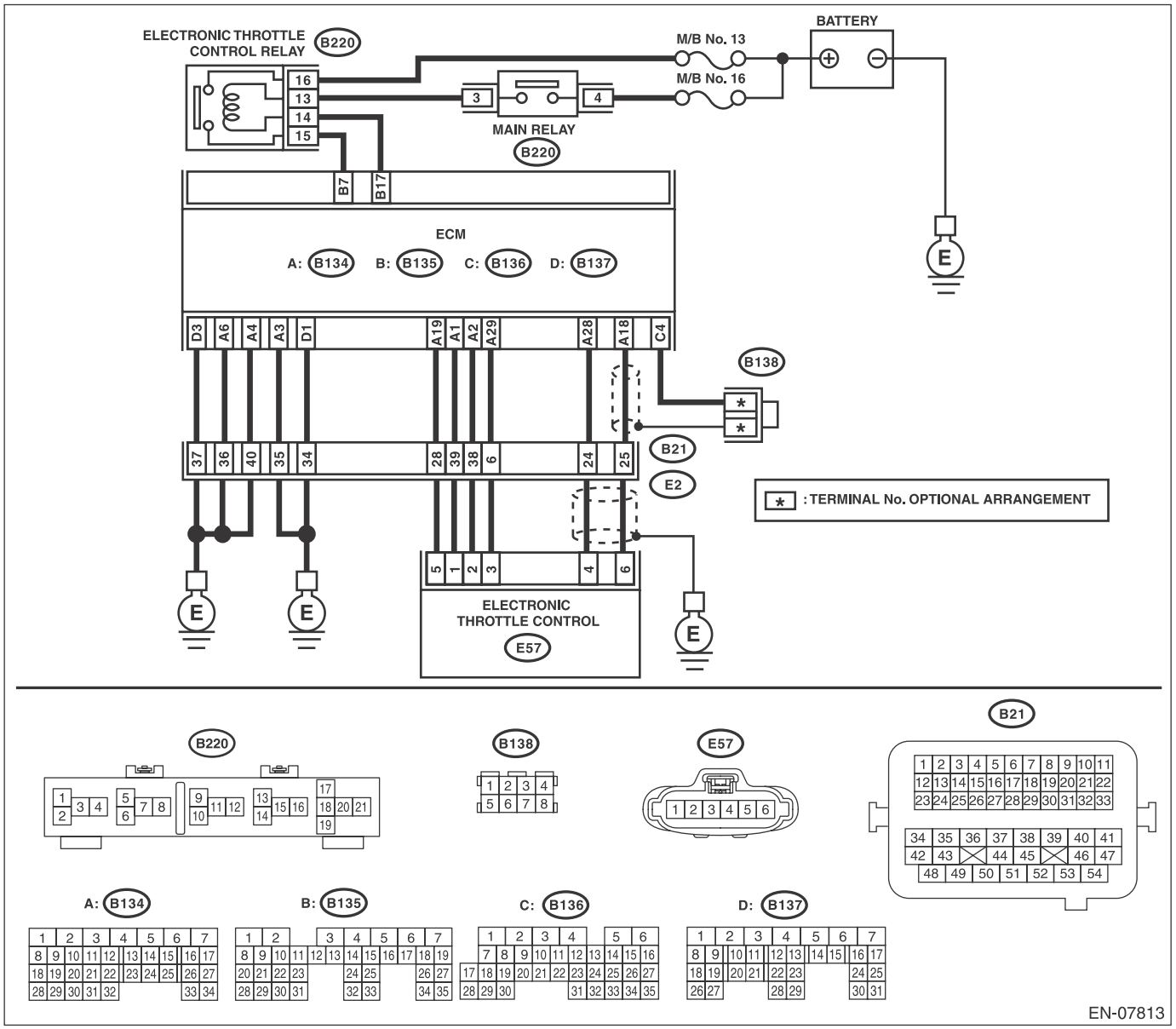

	Step	Check	Yes	No
1	**CHECK HARNESS BETWEEN ECM AND ELECTRONIC THROTTLE CONTROL CONNECTOR.** 1) Turn the ignition switch to OFF. 2) Disconnect the connectors from the ECM and electronic throttle control. 3) Measure the resistance between ECM and chassis ground. ***Connector & terminal*** ***(B134) No. 19 — Chassis ground:*** ***(B134) No. 28 — Chassis ground:***	Is the resistance 1 MΩ or more?	Go to step **2**.	Repair the ground short circuit of harness between ECM and electronic throttle control connector.
2	**CHECK SHORT CIRCUIT INSIDE THE ECM.** 1) Connect the connector to ECM. 2) Measure the resistance between electronic throttle control connector and engine ground. ***Connector & terminal*** ***(E57) No. 4 — Engine ground:***	Is the resistance 1 MΩ or more?	Replace the electronic throttle control. <Ref. to FU(H4DOTC)-15, Throttle Body.>	Repair the ground short circuit of harness between ECM and electronic throttle control connector. Replace the ECM if defective. <Ref. to FU(H4DOTC)-57, Engine Control Module (ECM).>

AS:DTC P0223 THROTTLE/PEDAL POSITION SENSOR/SWITCH “B” CIRCUIT HIGH

DTC DETECTING CONDITION:

- Immediately at fault recognition
- GENERAL DESCRIPTION <Ref. to GD(H4DOTC)-84, DTC P0223 THROTTLE/PEDAL POSITION SENSOR/SWITCH “B” CIRCUIT HIGH, Diagnostic Trouble Code (DTC) Detecting Criteria.>

TROUBLE SYMPTOM:

- Improper idling
- Poor driving performance
- Engine stalls.

CAUTION:

After servicing or replacing faulty parts, perform Clear Memory Mode <Ref. to EN(H4DOTC)(diag)-55, OPERATION, Clear Memory Mode.>, and Inspection Mode <Ref. to EN(H4DOTC)(diag)-44, PROCEDURE, Inspection Mode.>.

WIRING DIAGRAM:

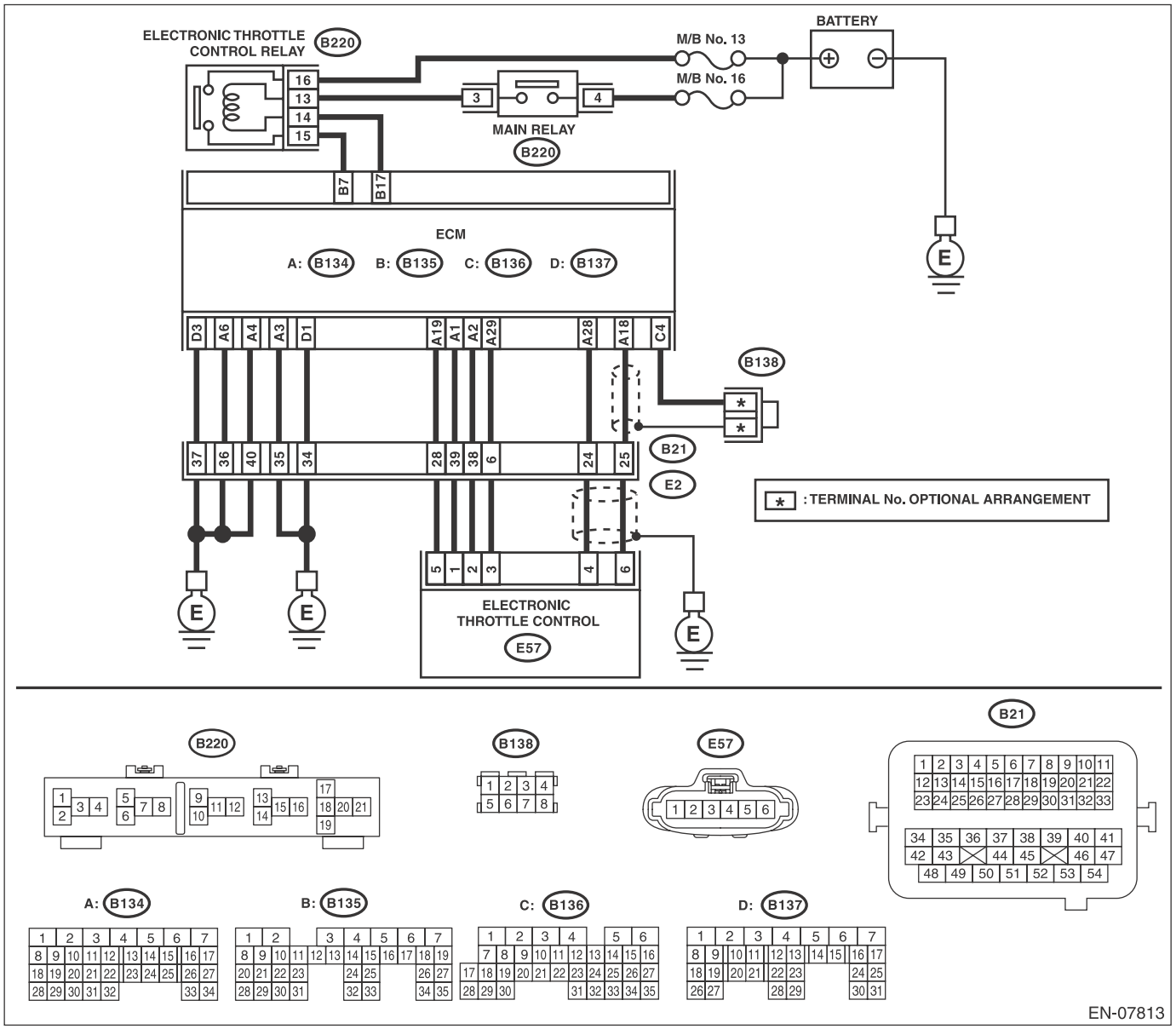

	Step	Check	Yes	No
1	**CHECK HARNESS BETWEEN ECM AND ELECTRONIC THROTTLE CONTROL CONNECTOR.** 1) Turn the ignition switch to OFF. 2) Disconnect the connectors from the ECM and electronic throttle control. 3) Measure the resistance of harness between ECM and electronic throttle control connector. ***Connector & terminal*** ***(B134) No. 28 — (E57) No. 4:*** ***(B134) No. 29 — (E57) No. 3:***	Is the resistance less than 1 Ω?	Go to step **2**.	Repair the harness and connector. NOTE: In this case, repair the following item: • Open circuit in harness between ECM and electronic throttle control connector • Poor contact of coupling connector
2	**CHECK HARNESS BETWEEN ECM AND ELECTRONIC THROTTLE CONTROL CONNECTOR.** 1) Connect the connector to ECM. 2) Measure the resistance between electronic throttle control connector and engine ground. ***Connector & terminal*** ***(E57) No. 3 — Engine ground:***	Is the resistance less than 5 Ω?	Go to step **3**.	Repair the harness and connector. NOTE: In this case, repair the following item: • Open circuit of harness between ECM and engine ground • Poor contact of ECM connector • Poor contact of coupling connector
3	**CHECK HARNESS BETWEEN ECM AND ELECTRONIC THROTTLE CONTROL CONNECTOR.** 1) Turn the ignition switch to ON. 2) Measure the voltage between electronic throttle control connector and engine ground. ***Connector & terminal*** ***(E57) No. 4 (+) — Engine ground (–):***	Is the voltage 5 V or more?	Repair the short circuit of harness to power supply between ECM and electronic throttle control connector.	Go to step **4**.
4	**CHECK HARNESS BETWEEN ECM AND ELECTRONIC THROTTLE CONTROL CONNECTOR.** 1) Turn the ignition switch to OFF. 2) Disconnect the connector from ECM. 3) Measure the resistance between ECM connectors. ***Connector & terminal*** ***(B134) No. 19 — (B134) No. 28:***	Is the resistance 1 MΩ or more?	Repair the poor contact of electronic throttle control connector. Replace the electronic throttle control if defective. <Ref. to FU(H4DOTC)-15, Throttle Body.>	Repair the short circuit of harness to power supply between ECM and electronic throttle control connector.

AT:DTC P0230 FUEL PUMP PRIMARY CIRCUIT

DTC DETECTING CONDITION:

- Detected when two consecutive driving cycles with fault occur.
- GENERAL DESCRIPTION <Ref. to GD(H4DOTC)-85, DTC P0230 FUEL PUMP PRIMARY CIRCUIT, Diagnostic Trouble Code (DTC) Detecting Criteria.>

CAUTION:

After servicing or replacing faulty parts, perform Clear Memory Mode <Ref. to EN(H4DOTC)(diag)-55, OPERATION, Clear Memory Mode.>, and Inspection Mode <Ref. to EN(H4DOTC)(diag)-44, PROCEDURE, Inspection Mode.>.

WIRING DIAGRAM:

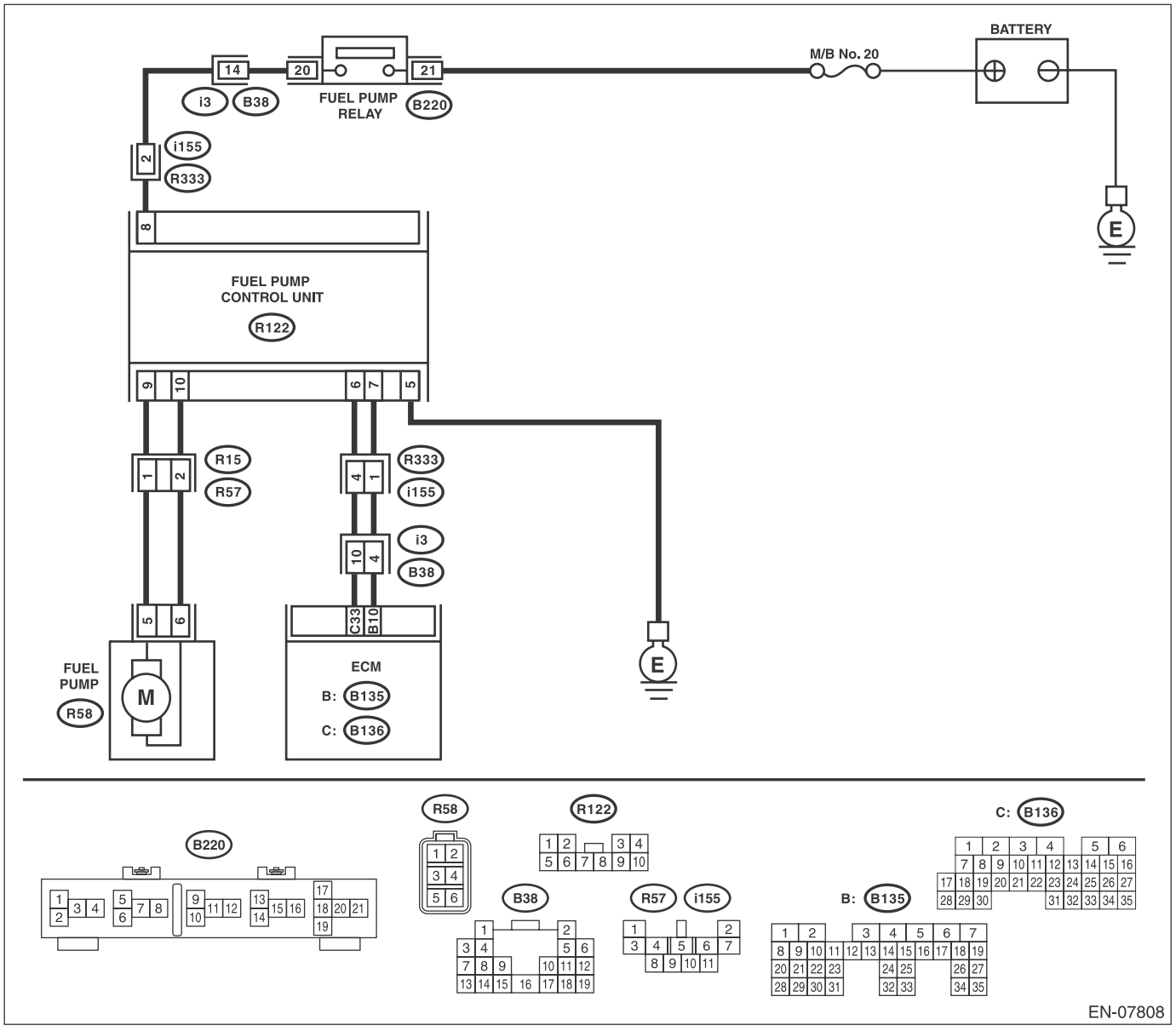

	Step	Check	Yes	No
1	**CHECK POWER SUPPLY CIRCUIT TO FUEL PUMP CONTROL UNIT.** 1) Turn the ignition switch to OFF. 2) Disconnect the connector from fuel pump control unit. 3) Turn the ignition switch to ON. 4) Measure the voltage between fuel pump control unit connector and chassis ground. ***Connector & terminal*** ***(R122) No. 8 (+) — Chassis ground (–):***	Is the voltage 10 V or more?	Go to step **2.**	Repair the power supply circuit. NOTE: In this case, repair the following item: • Open or ground short circuit of harness between fuel pump relay and fuel pump control unit connector • Poor contact of fuel pump relay connector • Poor contact of coupling connector
2	**CHECK GROUND CIRCUIT OF FUEL PUMP CONTROL UNIT.** 1) Turn the ignition switch to OFF. 2) Measure the resistance of harness between fuel pump control unit connector and chassis ground. ***Connector & terminal*** ***(R122) No. 5 — Chassis ground:***	Is the resistance less than 5 Ω?	Go to step **3.**	Repair the open circuit in harness between fuel pump control unit and chassis ground.
3	**CHECK HARNESS BETWEEN FUEL PUMP CONTROL UNIT AND FUEL PUMP CONNECTOR.** 1) Disconnect the connector from fuel pump. 2) Measure the resistance of harness between fuel pump control unit and fuel pump connector. ***Connector & terminal*** ***(R122) No. 9 — (R58) No. 5:*** ***(R122) No. 10 — (R58) No. 6:***	Is the resistance less than 1 Ω?	Go to step **4.**	Repair the harness and connector. NOTE: In this case, repair the following item: • Open circuit in harness between fuel pump control unit and fuel pump connector • Poor contact of coupling connector
4	**CHECK HARNESS BETWEEN FUEL PUMP CONTROL UNIT AND FUEL PUMP CONNECTOR.** Measure the resistance between fuel pump control unit connector and chassis ground. ***Connector & terminal*** ***(R122) No. 9 — Chassis ground:*** ***(R122) No. 10 — Chassis ground:***	Is the resistance 1 MΩ or more?	Go to step **5.**	Repair the ground short circuit of harness between fuel pump control unit and fuel pump connector.
5	**CHECK HARNESS BETWEEN ECM AND FUEL PUMP CONTROL UNIT CONNECTOR.** 1) Disconnect the connector from ECM. 2) Measure the resistance of harness between ECM and fuel pump control unit connector. ***Connector & terminal*** ***(B136) No. 33 — (R122) No. 6:*** ***(B135) No. 10 — (R122) No. 7:***	Is the resistance less than 1 Ω?	Go to step **6.**	Repair the harness and connector. NOTE: In this case, repair the following item: • Open circuit between ECM and fuel pump control unit connector • Poor contact of coupling connector

	Step	Check	Yes	No
6	**CHECK HARNESS BETWEEN ECM AND FUEL PUMP CONTROL UNIT CONNECTOR.** Measure the resistance between fuel pump control unit connector and chassis ground. ***Connector & terminal*** ***(R122) No. 6 — Chassis ground:*** ***(R122) No. 7 — Chassis ground:***	Is the resistance 1 MΩ or more?	Go to step **7**.	Repair the short circuit to ground in harness between ECM and fuel pump control unit connector.
7	**CHECK FOR POOR CONTACT.** Check for poor contact of ECM and fuel pump control unit connector.	Is there poor contact of ECM or fuel pump control unit connector?	Repair the poor contact of ECM or fuel pump control unit connector.	Go to step **8**.
8	**CHECK EXPERIENCE OF RUNNING OUT OF FUEL.**	Has the vehicle experienced running out of fuel?	Finish the diagnosis. NOTE: DTC may be recorded as a result of fuel pump idling while running out of fuel.	Replace the fuel pump control unit. <Ref. to FU(H4DOTC)-64, Fuel Pump Control Unit.>

AU:DTC P0244 TURBO/SUPER CHARGER WASTEGATE SOLENOID “A” RANGE/PERFORMANCE

DTC DETECTING CONDITION:

- Immediately at fault recognition
- GENERAL DESCRIPTION <Ref. to GD(H4DOTC)-87, DTC P0244 TURBO/SUPER CHARGER WASTEGATE SOLENOID “A” RANGE/PERFORMANCE, Diagnostic Trouble Code (DTC) Detecting Criteria.>

TROUBLE SYMPTOM:

Poor driving performance

CAUTION:

After servicing or replacing faulty parts, perform Clear Memory Mode <Ref. to EN(H4DOTC)(diag)-55, OPERATION, Clear Memory Mode.>, and Inspection Mode <Ref. to EN(H4DOTC)(diag)-44, PROCEDURE, Inspection Mode.>.

WIRING DIAGRAM:

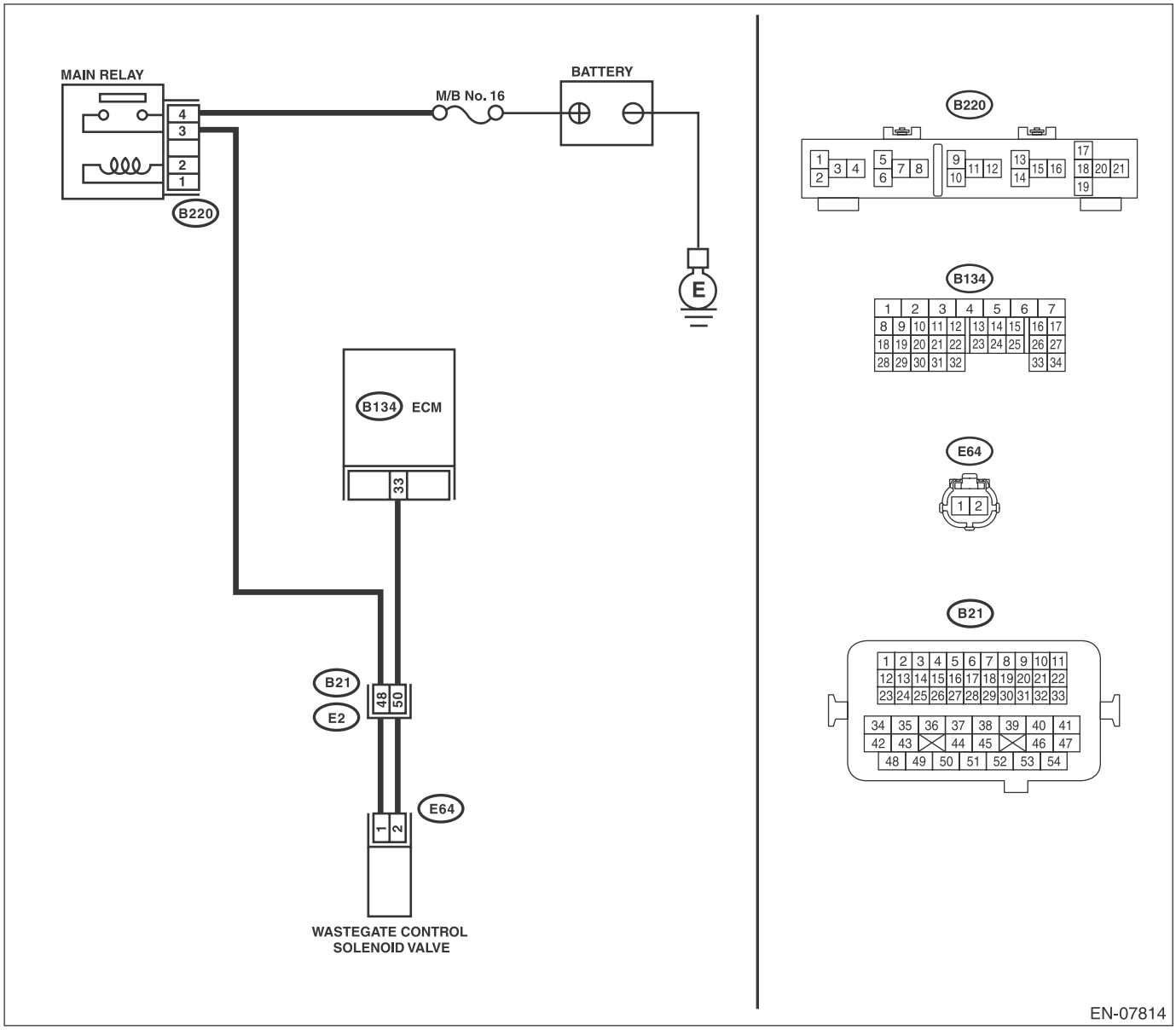

	Step	Check	Yes	No
1	**CHECK FOR ANY OTHER DTC ON DISPLAY.**	Is any other DTC displayed?	Check the appropriate DTC using the “List of Diagnostic Trouble Code (DTC)”. <Ref. to EN(H4DOTC)(diag)-78, List of Diagnostic Trouble Code (DTC).>	Go to step **2**.
2	**CHECK WASTEGATE ACTUATOR PIPING AND WASTEGATE CONTROL SOLENOID VALVE PIPING.**	Are there any damage or disconnection of hose in wastegate actuator piping or wastegate control solenoid valve piping?	Connect the wastegate actuator pipe or wastegate control solenoid valve pipe properly. If defective, replace the hose.	Replace the wastegate control solenoid valve. <Ref. to FU(H4DOTC)-51, Wastegate Control Solenoid Valve.>

AV:DTC P0245 TURBO/SUPER CHARGER WASTEGATE SOLENOID “A” LOW

DTC DETECTING CONDITION:

- Immediately at fault recognition
- GENERAL DESCRIPTION <Ref. to GD(H4DOTC)-90, DTC P0245 TURBO/SUPER CHARGER WASTEGATE SOLENOID “A” LOW, Diagnostic Trouble Code (DTC) Detecting Criteria.>

TROUBLE SYMPTOM:

Poor driving performance

CAUTION:

After servicing or replacing faulty parts, perform Clear Memory Mode <Ref. to EN(H4DOTC)(diag)-55, OPERATION, Clear Memory Mode.>, and Inspection Mode <Ref. to EN(H4DOTC)(diag)-44, PROCEDURE, Inspection Mode.>.

WIRING DIAGRAM:

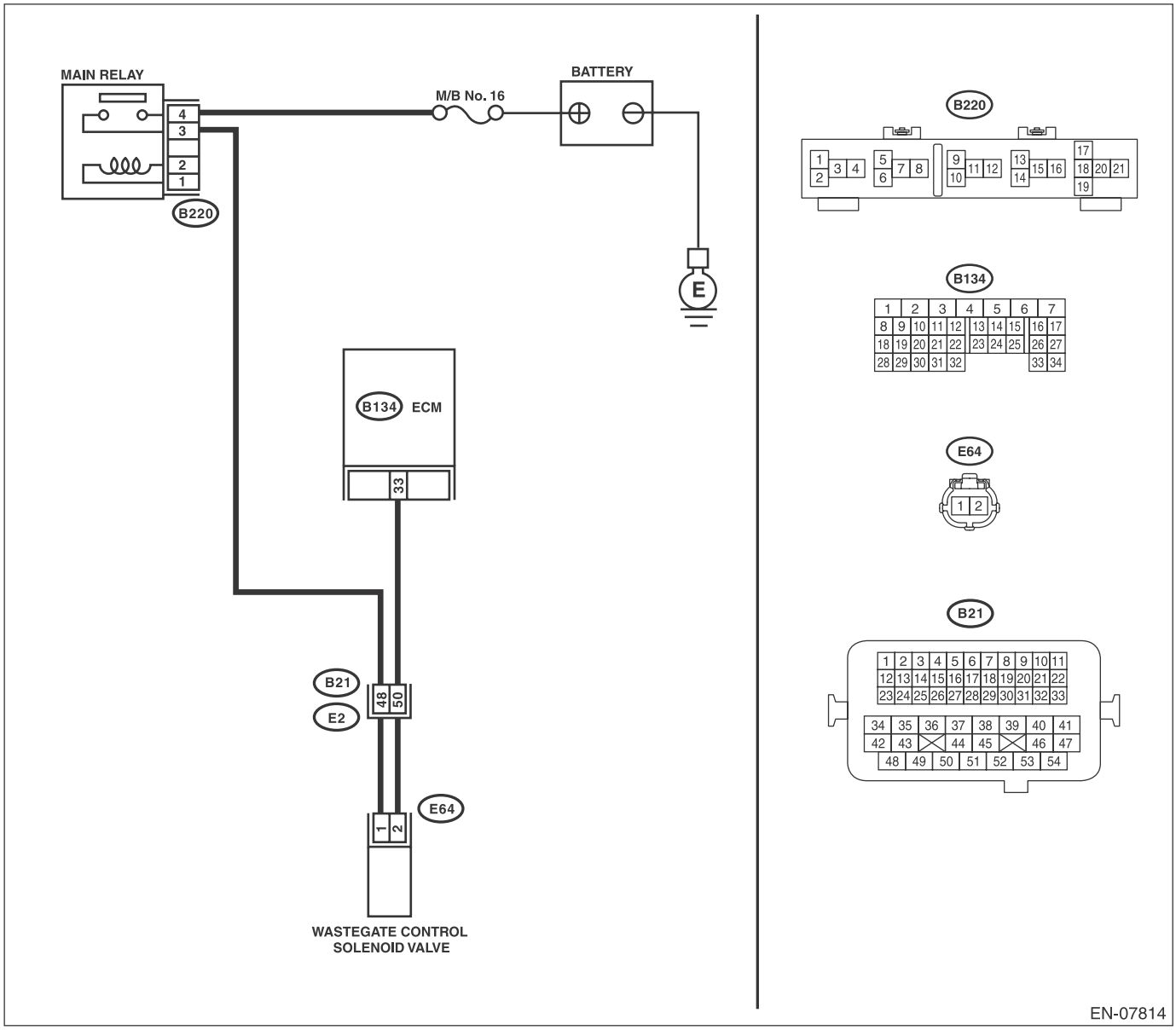

	Step	Check	Yes	No
1	**CHECK OUTPUT SIGNAL OF ECM.** 1) Turn the ignition switch to ON. 2) Measure the voltage between ECM and chassis ground. ***Connector & terminal*** ***(B134) No. 33 (+) — Chassis ground (–):***	Is the voltage 10 V or more?	Go to step **2**.	Go to step **3**.
2	**CHECK FOR POOR CONTACT.** Check for poor contact of ECM connector.	Is there poor contact of ECM connector?	Repair the poor contact of ECM connector.	Even if DTC is detected, the circuit has returned to a normal condition at this time. Reproduce the failure, and then perform the diagnosis again. NOTE: In this case, temporary open or short circuit of harness or temporary poor contact of connector may be the cause.
3	**CHECK POWER SUPPLY TO WASTEGATE CONTROL SOLENOID VALVE.** Measure the voltage between wastegate control solenoid valve connector and engine ground. ***Connector & terminal*** ***(E64) No. 1 (+) — Engine ground (–):***	Is the voltage 10 V or more?	Go to step **4**.	Repair the power supply circuit.
4	**CHECK HARNESS BETWEEN ECM AND WASTEGATE CONTROL SOLENOID VALVE CONNECTOR.** 1) Turn the ignition switch to OFF. 2) Disconnect the connector from ECM and wastegate control solenoid valve. 3) Measure the resistance between wastegate control solenoid valve connector and engine ground. ***Connector & terminal*** ***(E64) No. 2 — Engine ground:***	Is the resistance 1 MΩ or more?	Go to step **5**.	Repair ground short circuit of harness between ECM and wastegate control solenoid valve connector.
5	**CHECK HARNESS BETWEEN ECM AND WASTEGATE CONTROL SOLENOID VALVE CONNECTOR.** Measure the resistance of harness between ECM and wastegate control solenoid valve connector. ***Connector & terminal*** ***(B134) No. 33 — (E64) No. 2:***	Is the resistance less than 1 Ω?	Go to step **6**.	Repair the harness and connector. NOTE: In this case, repair the following item: • Open circuit of harness between ECM and wastegate control solenoid valve connector • Poor contact of coupling connector

	Step	Check	Yes	No
6	**CHECK WASTEGATE CONTROL SOLENOID VALVE.** 1) Remove the wastegate control solenoid valve. 2) Measure the resistance between wastegate control solenoid valve terminals. ***Terminals*** ***No. 1 — No. 2:***	Is the resistance 10 — 100 Ω?	Repair poor contact of wastegate control solenoid valve connector.	Replace the wastegate control solenoid valve. <Ref. to FU(H4DOTC)-51, Wastegate Control Solenoid Valve.>

AW:DTC P0246 TURBO/SUPER CHARGER WASTEGATE SOLENOID “A” HIGH

DTC DETECTING CONDITION:

- Immediately at fault recognition
- GENERAL DESCRIPTION <Ref. to GD(H4DOTC)-91, DTC P0246 TURBO/SUPER CHARGER WASTEGATE SOLENOID “A” HIGH, Diagnostic Trouble Code (DTC) Detecting Criteria.>

TROUBLE SYMPTOM:

Poor driving performance

CAUTION:

After servicing or replacing faulty parts, perform Clear Memory Mode <Ref. to EN(H4DOTC)(diag)-55, OPERATION, Clear Memory Mode.>, and Inspection Mode <Ref. to EN(H4DOTC)(diag)-44, PROCEDURE, Inspection Mode.>.

WIRING DIAGRAM:

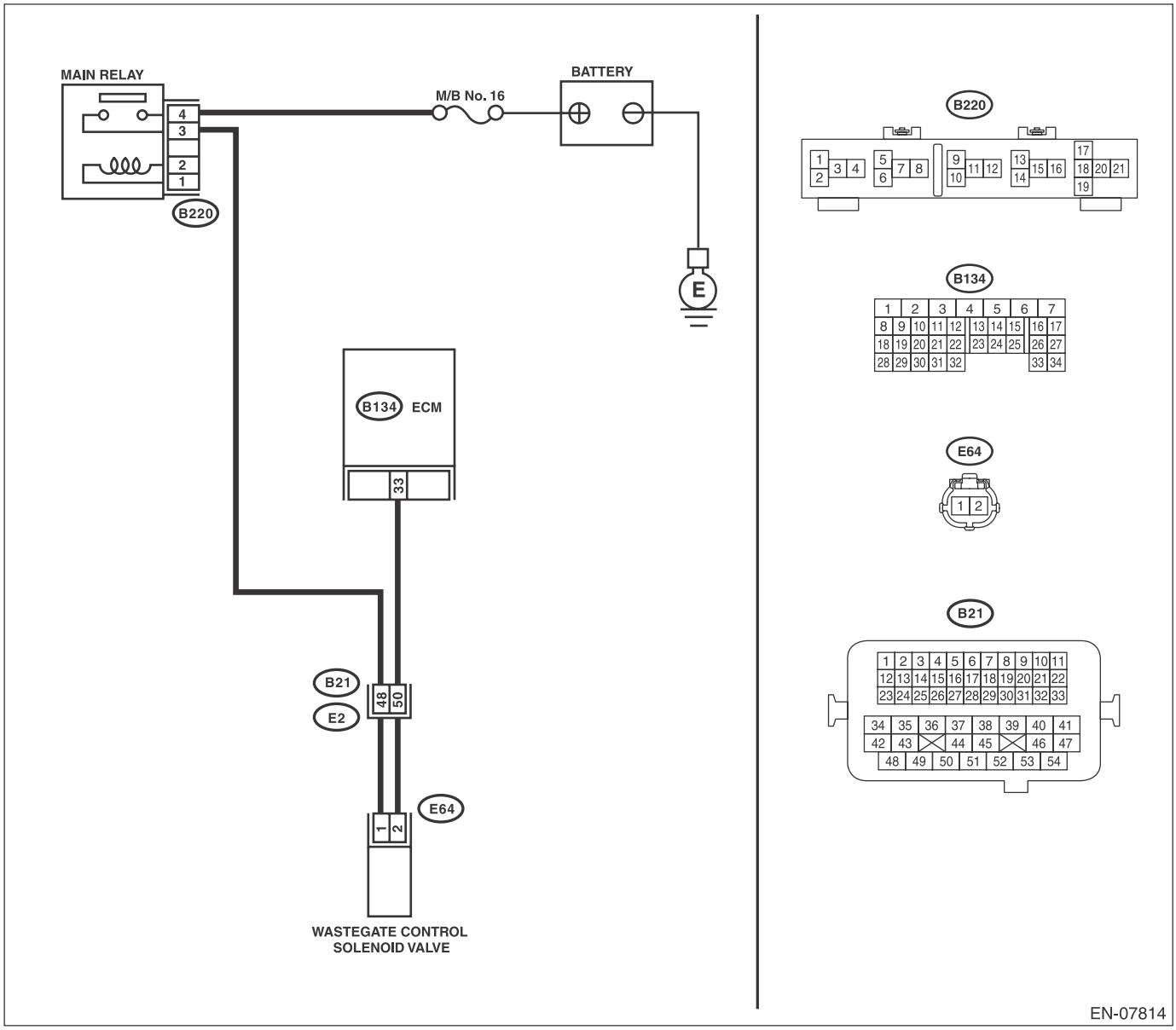

	Step	Check	Yes	No
1	**CHECK HARNESS BETWEEN ECM AND WASTEGATE CONTROL SOLENOID VALVE CONNECTOR.** 1) Turn the ignition switch to OFF. 2) Disconnect the connector from ECM and wastegate control solenoid valve. 3) Turn the ignition switch to ON. 4) Measure the voltage between ECM and chassis ground. ***Connector & terminal*** ***(B134) No. 33 (+) — Chassis ground (−):***	Is the voltage 10 V or more?	Repair short circuit of the harness to power supply between ECM and wastegate control solenoid valve connector.	Go to step **2**.
2	**CHECK WASTEGATE CONTROL SOLENOID VALVE.** 1) Turn the ignition switch to OFF. 2) Measure the resistance between wastegate control solenoid valve terminals. ***Terminals*** ***No. 1 — No. 2:***	Is the resistance less than 1 Ω?	Replace the wastegate control solenoid valve. <Ref. to FU(H4DOTC)-51, Wastegate Control Solenoid Valve.>	Repair the poor contact of ECM connector.

AX:DTC P0301 CYLINDER 1 MISFIRE DETECTED

NOTE:
For the diagnostic procedure, refer to DTC P0304. <Ref. to EN(H4DOTC)(diag)-173, DTC P0304 CYLINDER 4 MISFIRE DETECTED, Diagnostic Procedure with Diagnostic Trouble Code (DTC).>

AY:DTC P0302 CYLINDER 2 MISFIRE DETECTED

NOTE:
For the diagnostic procedure, refer to DTC P0304. <Ref. to EN(H4DOTC)(diag)-173, DTC P0304 CYLINDER 4 MISFIRE DETECTED, Diagnostic Procedure with Diagnostic Trouble Code (DTC).>

AZ:DTC P0303 CYLINDER 3 MISFIRE DETECTED

NOTE:
For the diagnostic procedure, refer to DTC P0304. <Ref. to EN(H4DOTC)(diag)-173, DTC P0304 CYLINDER 4 MISFIRE DETECTED, Diagnostic Procedure with Diagnostic Trouble Code (DTC).>

BA:DTC P0304 CYLINDER 4 MISFIRE DETECTED

DTC DETECTING CONDITION:

- Detected when two consecutive driving cycles with fault occur.
- Immediately at fault recognition (A misfire which could damage catalyst occurs.)
- GENERAL DESCRIPTION <Ref. to GD(H4DOTC)-97, DTC P0304 CYLINDER 4 MISFIRE DETECTED, Diagnostic Trouble Code (DTC) Detecting Criteria.>

TROUBLE SYMPTOM:

- Engine stalls.
- Improper idling
- Rough driving

CAUTION:

After servicing or replacing faulty parts, perform Clear Memory Mode <Ref. to EN(H4DOTC)(diag)-55, OPERATION, Clear Memory Mode.>, and Inspection Mode <Ref. to EN(H4DOTC)(diag)-44, PROCEDURE, Inspection Mode.>.

WIRING DIAGRAM:

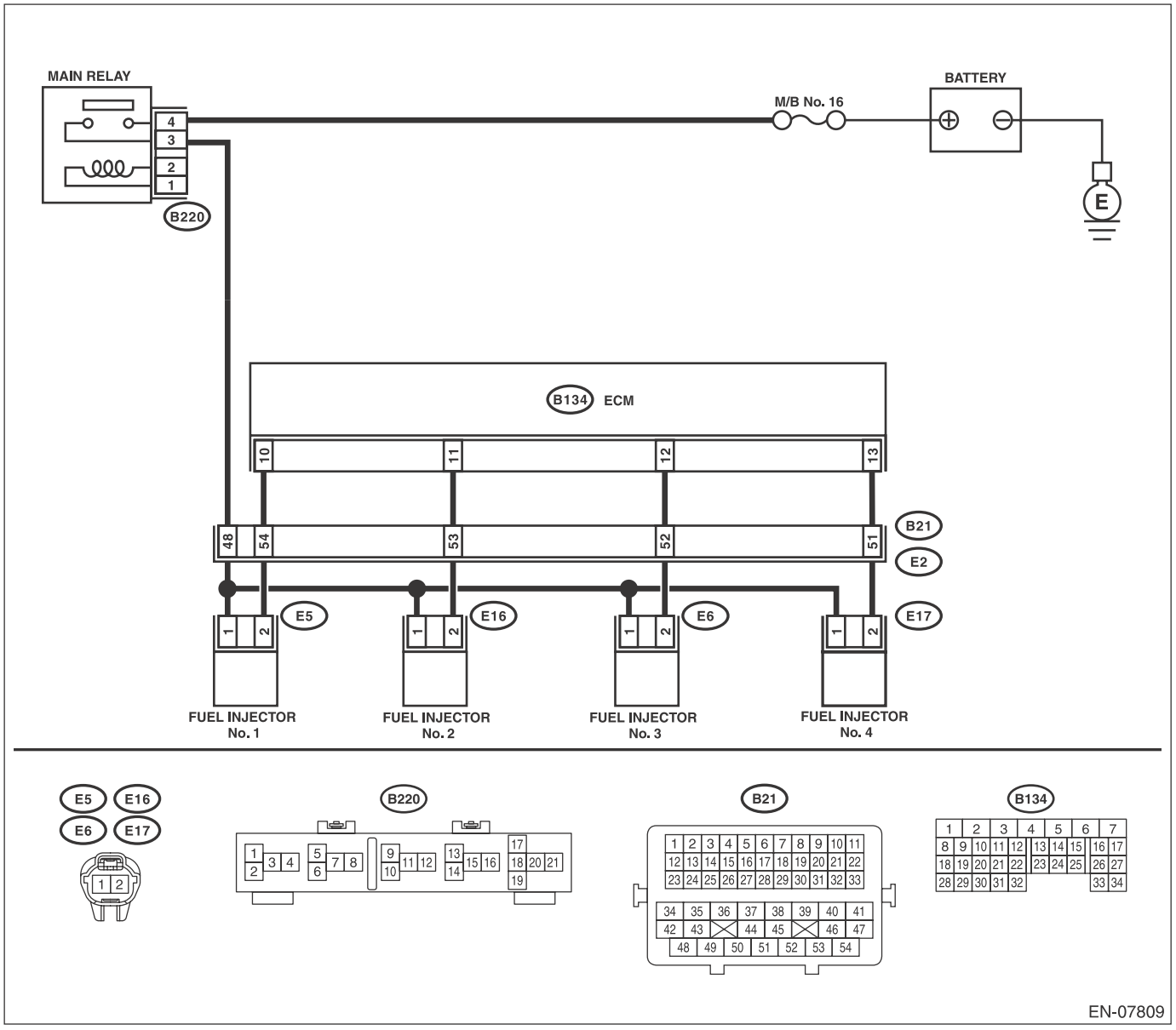

	Step	Check	Yes	No
1	**CHECK OUTPUT SIGNAL OF ECM.** 1) Turn the ignition switch to ON. 2) Measure the voltage between ECM and chassis ground on faulty cylinders. ***Connector & terminal*** ***#1 (B134) No. 10 (+) — Chassis ground (–):*** ***#2 (B134) No. 11 (+) — Chassis ground (–):*** ***#3 (B134) No. 12 (+) — Chassis ground (–):*** ***#4 (B134) No. 13 (+) — Chassis ground (–):***	Is the voltage 10 V or more?	Go to step **6**.	Go to step **2**.
2	**CHECK HARNESS BETWEEN ECM AND FUEL INJECTOR CONNECTOR.** 1) Turn the ignition switch to OFF. 2) Disconnect the connector from fuel injector on faulty cylinders. 3) Measure the resistance between fuel injector connector and engine ground on faulty cylinders. ***Connector & terminal*** ***#1 (E5) No. 2 — Engine ground:*** ***#2 (E16) No. 2 — Engine ground:*** ***#3 (E6) No. 2 — Engine ground:*** ***#4 (E17) No. 2 — Engine ground:***	Is the resistance 1 MΩ or more?	Go to step **3**.	Repair the ground short circuit of harness between ECM and fuel injector connector.
3	**CHECK HARNESS BETWEEN ECM AND FUEL INJECTOR CONNECTOR.** Measure the resistance of harness between ECM and fuel injector connector on faulty cylinders. ***Connector & terminal*** ***#1 (B134) No. 10 — (E5) No. 2:*** ***#2 (B134) No. 11 — (E16) No. 2:*** ***#3 (B134) No. 12 — (E6) No. 2:*** ***#4 (B134) No. 13 — (E17) No. 2:***	Is the resistance less than 1 Ω?	Go to step **4**.	Repair the harness and connector. NOTE: In this case, repair the following item: • Open circuit in harness between ECM and fuel injector connector • Poor contact of coupling connector
4	**CHECK FUEL INJECTOR.** Measure the resistance between fuel injector terminals on faulty cylinder. ***Terminals*** ***No. 1 — No. 2:***	Is the resistance 5 — 20 Ω?	Go to step **5**.	Replace the faulty fuel injector. <Ref. to FU(H4DOTC)-43, Fuel Injector.>
5	**CHECK POWER SUPPLY LINE.** 1) Turn the ignition switch to ON. 2) Measure the voltage between fuel injector connector of faulty cylinders and engine ground. ***Connector & terminal*** ***#1 (E5) No. 1 (+) — Engine ground (–):*** ***#2 (E16) No. 1 (+) — Engine ground (–):*** ***#3 (E6) No. 1 (+) — Engine ground (–):*** ***#4 (E17) No. 1 (+) — Engine ground (–):***	Is the voltage 10 V or more?	Repair the poor contact of all connectors in fuel injector circuit.	Repair the harness and connector. NOTE: In this case, repair the following item: • Open circuit in harness between the main relay and fuel injector connector on faulty cylinders • Poor contact of coupling connector • Poor contact of main relay connector

	Step	Check	Yes	No
6	**CHECK HARNESS BETWEEN ECM AND FUEL INJECTOR CONNECTOR.** 1) Turn the ignition switch to OFF. 2) Disconnect the connector from fuel injector on faulty cylinders. 3) Turn the ignition switch to ON. 4) Measure the voltage between ECM and chassis ground on faulty cylinders. ***Connector & terminal*** ***#1 (B134) No. 10 (+) — Chassis ground (–):*** ***#2 (B134) No. 11 (+) — Chassis ground (–):*** ***#3 (B134) No. 12 (+) — Chassis ground (–):*** ***#4 (B134) No. 13 (+) — Chassis ground (–):***	Is the voltage 10 V or more?	Repair the short circuit to power in the harness between the ECM and fuel injector.	Go to step **7**.
7	**CHECK FUEL INJECTOR.** 1) Turn the ignition switch to OFF. 2) Measure the resistance between fuel injector terminals on faulty cylinder. ***Terminals*** ***No. 1 — No. 2:***	Is the resistance 5 — 20 Ω?	Replace the faulty fuel injector. <Ref. to FU(H4DOTC)-43, Fuel Injector.>	Go to step **8**.
8	**CHECK INSTALLATION OF CAMSHAFT POSITION SENSOR/CRANKSHAFT POSITION SENSOR.**	Is the camshaft position sensor or crankshaft position sensor loosely installed?	Tighten the camshaft position sensor or crankshaft position sensor.	Go to step **9**.
9	**CHECK CRANK SPROCKET.** Remove the timing belt cover. <Ref. to ME(H4DOTC)-46, REMOVAL, Timing Belt Cover.>	Is the crank sprocket rusted or does it have broken teeth?	Replace the crank sprocket. <Ref. to ME(H4DOTC)-61, Crank Sprocket.>	Go to step **10**.
10	**CHECK INSTALLATION CONDITION OF TIMING BELT.** Turn the crankshaft using ST, and align the alignment mark on crank sprocket with alignment mark on cylinder block. ST 499987500 CRANKSHAFT SOCKET	Is the timing belt dislocated from its proper position?	Repair the installation condition of timing belt. <Ref. to ME(H4DOTC)-51, Timing Belt.>	Go to step **11**.
11	**CHECK FUEL LEVEL.**	Is the fuel meter indication higher than the “Lower” level?	Go to step **12**.	Refill the fuel so that fuel meter indication is higher than the “Lower” level. After replenishing fuel, Go to step **12**.
12	**CHECK STATUS OF MALFUNCTION INDICATOR LIGHT.** 1) Clear the memory using the Subaru Select Monitor or general scan tool. <Ref. to EN(H4DOTC)(diag)-55, Clear Memory Mode.> 2) Start the engine, and drive the vehicle 10 minutes or more.	Does the malfunction indicator light illuminate or blink?	Go to step **14**.	Go to step **13**.

Step		Check	Yes	No
13	**CHECK CAUSE OF MISFIRE.**	Was the cause of misfire identified when the engine is running?	Finish diagnostics operation, if the engine has no abnormality.	Repair the poor contact of connector. NOTE: In this case, repair the following item: • Poor contact of ignition coil connector • Poor contact of fuel injector connector on faulty cylinders • Poor contact of ECM connector • Poor contact of coupling connector
14	**CHECK AIR INTAKE SYSTEM.**	Is there any fault in air intake system?	Repair the air intake system. NOTE: Check the following items. • Are there air leaks or air suction caused by loose or dislocated nuts and bolts? • Are there cracks or any disconnection of hoses?	Go to step **15**.
15	**CHECK MISFIRE SYMPTOM.** 1) Turn the ignition switch to ON. 2) Read the DTC. NOTE: • Subaru Select Monitor For detailed operation procedures, refer to “READ CURRENT DATA FOR ENGINE”. <Ref. to EN(H4DOTC)(diag)-37, Subaru Select Monitor.> • General scan tool For detailed operation procedures, refer to the general scan tool operation manual.	Does the Subaru Select Monitor or general scan tool indicate only one DTC?	Go to step **20**.	Go to step **16**.
16	**CHECK DTC.**	Is DTC P0301 and P0302 displayed on the Subaru Select Monitor or general scan tool?	Go to step **21**.	Go to step **17**.
17	**CHECK DTC.**	Is DTC P0303 and P0304 displayed on the Subaru Select Monitor or general scan tool?	Go to step **22**.	Go to step **18**.
18	**CHECK DTC.**	Is DTC P0301 and P0303 displayed on the Subaru Select Monitor or general scan tool?	Go to step **23**.	Go to step **19**.
19	**CHECK DTC.**	Is DTC P0302 and P0304 displayed on the Subaru Select Monitor or general scan tool?	Go to step **24**.	Go to step **25**.

Step		Check	Yes	No
20	ONLY ONE CYLINDER.	Is there any fault in the cylinder?	Repair or replace faulty parts. NOTE: Check the following items. • Spark plug • Fuel injector • Compression ratio	Go to DTC P0171. <Ref. to EN(H4DOTC)(diag)-150, DTC P0171 SYSTEM TOO LEAN (BANK 1), Diagnostic Procedure with Diagnostic Trouble Code (DTC).>
21	GROUP OF #1 AND #2 CYLINDERS.	Are there any faults in #1 and #2 cylinders?	Repair or replace faulty parts. NOTE: • Check the following items. • Spark plug • Fuel injector • Ignition coil • Compression ratio • If any fault is not found, check the “IGNITION CONTROL SYSTEM” of #1 and #2 cylinders side. <Ref. to EN(H4DOTC)(diag)-73, IGNITION CONTROL SYSTEM, Diagnostics for Engine Starting Failure.>	Go to DTC P0171. <Ref. to EN(H4DOTC)(diag)-150, DTC P0171 SYSTEM TOO LEAN (BANK 1), Diagnostic Procedure with Diagnostic Trouble Code (DTC).>
22	GROUP OF #3 AND #4 CYLINDERS.	Are there any faults in #3 and #4 cylinders?	Repair or replace faulty parts. NOTE: • Check the following items. • Spark plug • Fuel injector • Ignition coil • Compression ratio • If any fault is not found, check the “IGNITION CONTROL SYSTEM” of #3 and #4 cylinders side. <Ref. to EN(H4DOTC)(diag)-73, IGNITION CONTROL SYSTEM, Diagnostics for Engine Starting Failure.>	Go to DTC P0171. <Ref. to EN(H4DOTC)(diag)-150, DTC P0171 SYSTEM TOO LEAN (BANK 1), Diagnostic Procedure with Diagnostic Trouble Code (DTC).>

Step		Check	Yes	No
23	GROUP OF #1 AND #3 CYLINDERS.	Are there any faults in #1 and #3 cylinders?	Repair or replace faulty parts. NOTE: Check the following items. • Spark plug • Fuel injector • Compression ratio • Skipping timing belt teeth	Go to DTC P0171. <Ref. to EN(H4DOTC)(diag)-150, DTC P0171 SYSTEM TOO LEAN (BANK 1), Diagnostic Procedure with Diagnostic Trouble Code (DTC).>
24	GROUP OF #2 AND #4 CYLINDERS.	Are there any faults in #2 and #4 cylinders?	Repair or replace faulty parts. NOTE: Check the following items. • Spark plug • Fuel injector • Compression ratio • Skipping timing belt teeth	Go to DTC P0171. <Ref. to EN(H4DOTC)(diag)-150, DTC P0171 SYSTEM TOO LEAN (BANK 1), Diagnostic Procedure with Diagnostic Trouble Code (DTC).>
25	CYLINDER AT RANDOM.	Is the engine idle rough?	Go to DTC P0171. <Ref. to EN(H4DOTC)(diag)-150, DTC P0171 SYSTEM TOO LEAN (BANK 1), Diagnostic Procedure with Diagnostic Trouble Code (DTC).>	Repair or replace faulty parts. NOTE: Check the following items. • Spark plug • Fuel injector • Compression ratio

BB:DTC P0327 KNOCK SENSOR 1 CIRCUIT LOW (BANK 1 OR SINGLE SENSOR)

DTC DETECTING CONDITION:

- Immediately at fault recognition
- GENERAL DESCRIPTION <Ref. to GD(H4DOTC)-98, DTC P0327 KNOCK SENSOR 1 CIRCUIT LOW (BANK 1 OR SINGLE SENSOR), Diagnostic Trouble Code (DTC) Detecting Criteria.>

TROUBLE SYMPTOM:

- Poor driving performance
- Knocking occurs.

CAUTION:

After servicing or replacing faulty parts, perform Clear Memory Mode <Ref. to EN(H4DOTC)(diag)-55, OPERATION, Clear Memory Mode.>, and Inspection Mode <Ref. to EN(H4DOTC)(diag)-44, PROCEDURE, Inspection Mode.>.

WIRING DIAGRAM:

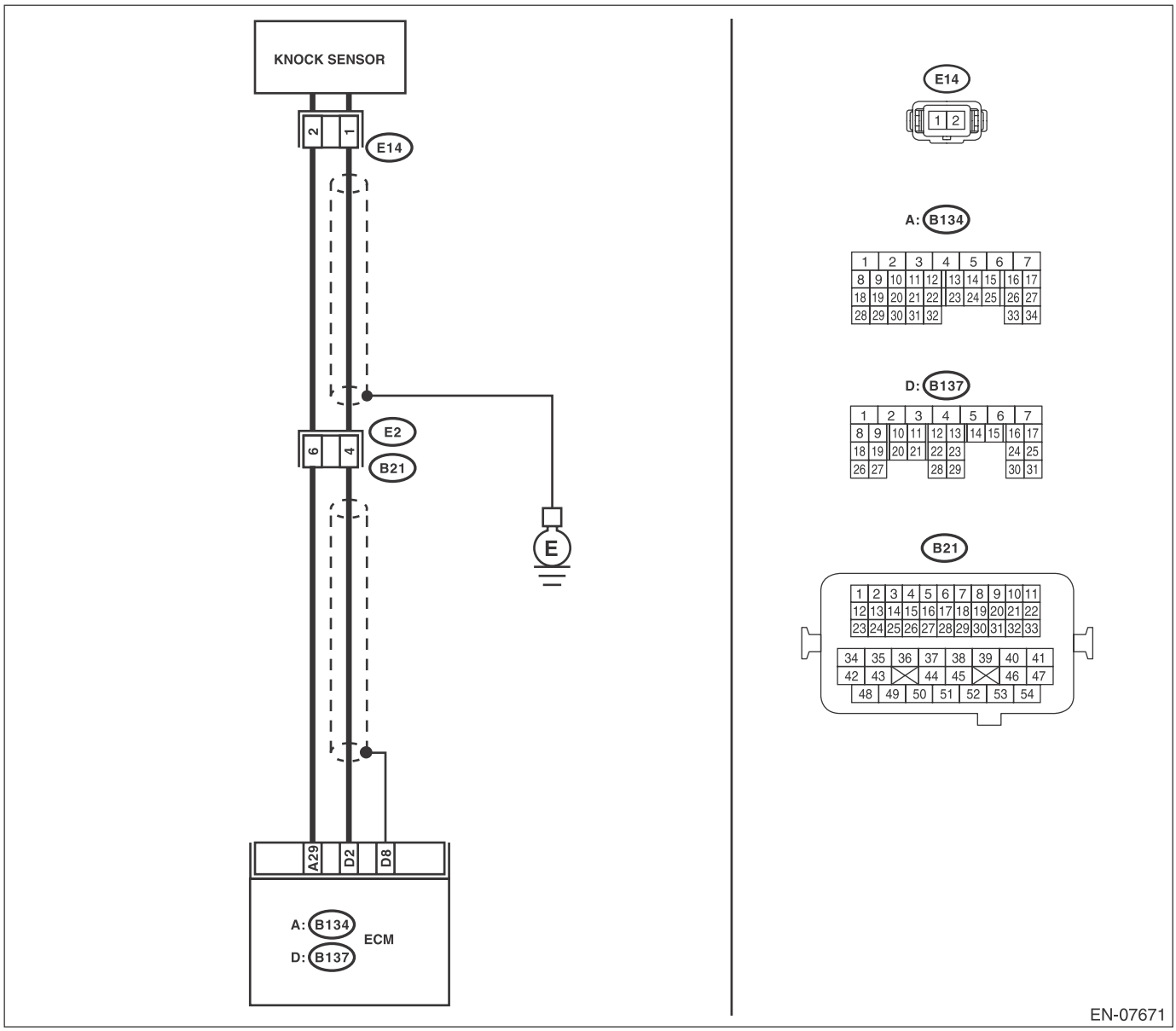

	Step	Check	Yes	No
1	**CHECK HARNESS BETWEEN ECM AND KNOCK SENSOR CONNECTOR.** 1) Turn the ignition switch to OFF. 2) Disconnect the connector from ECM. 3) Measure the resistance between ECM connectors. ***Connector & terminal*** ***(B137) No. 2 — (B134) No. 29:***	Is the resistance 600 kΩ or more?	Go to step **2**.	Repair the poor contact of ECM connector.
2	**CHECK KNOCK SENSOR.** 1) Disconnect the connector from knock sensor. 2) Measure the resistance between knock sensor terminals. ***Terminals*** ***No. 1 — No. 2:***	Is the resistance 600 kΩ or more?	Replace the knock sensor. <Ref. to FU(H4DOTC)-37, Knock Sensor.>	Repair the harness and connector. NOTE: In this case, repair the following item: • Open circuit in harness between ECM and knock sensor connector • Poor contact of knock sensor connector • Poor contact of coupling connector

BC:DTC P0328 KNOCK SENSOR 1 CIRCUIT HIGH (BANK 1 OR SINGLE SENSOR)

DTC DETECTING CONDITION:

- Immediately at fault recognition
- GENERAL DESCRIPTION <Ref. to GD(H4DOTC)-100, DTC P0328 KNOCK SENSOR 1 CIRCUIT HIGH (BANK 1 OR SINGLE SENSOR), Diagnostic Trouble Code (DTC) Detecting Criteria.>

TROUBLE SYMPTOM:

- Poor driving performance
- Knocking occurs.

CAUTION:

After servicing or replacing faulty parts, perform Clear Memory Mode <Ref. to EN(H4DOTC)(diag)-55, OPERATION, Clear Memory Mode.>, and Inspection Mode <Ref. to EN(H4DOTC)(diag)-44, PROCEDURE, Inspection Mode.>.

WIRING DIAGRAM:

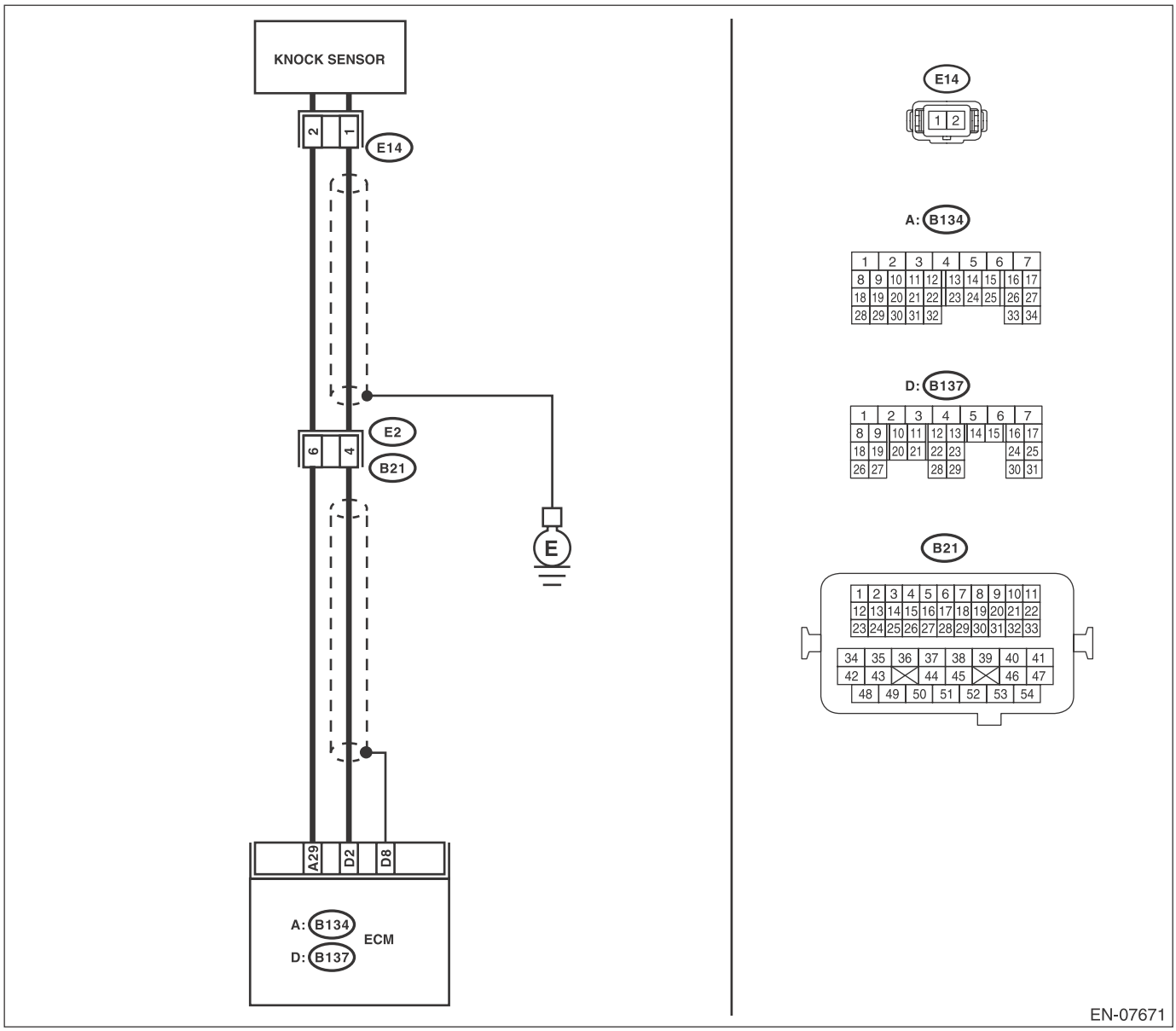

	Step	Check	Yes	No
1	**CHECK HARNESS BETWEEN ECM AND KNOCK SENSOR CONNECTOR.** 1) Turn the ignition switch to OFF. 2) Disconnect the connector from ECM. 3) Measure the resistance between ECM connectors. ***Connector & terminal*** ***(B137) No. 2 — (B134) No. 29:***	Is the resistance less than 500 kΩ?	Go to step **2**.	Go to step **3**.
2	**CHECK KNOCK SENSOR.** 1) Disconnect the connector from knock sensor. 2) Measure the resistance between knock sensor connectors. ***Terminals*** ***No. 1 — No. 2:***	Is the resistance less than 500 kΩ?	Replace the knock sensor. <Ref. to FU(H4DOTC)-37, Knock Sensor.>	Repair the ground short circuit of harness between ECM and knock sensor connector. NOTE: The harness between both connectors are shielded. Remove the shield and repair the short circuit of the harness.
3	**CHECK INPUT SIGNAL OF ECM.** 1) Connect the connector to ECM. 2) Turn the ignition switch to ON. 3) Measure the voltage between ECM and chassis ground. ***Connector & terminal*** ***(B137) No. 2 (+) — Chassis ground (–):***	Is the voltage 2 V or more?	Even if DTC is detected, the circuit has returned to a normal condition at this time. Reproduce the failure, and then perform the diagnosis again. NOTE: In this case, temporary poor contact of connector, temporary open or short circuit of harness may be the cause.	Repair the poor contact of ECM connector.

BD:DTC P0335 CRANKSHAFT POSITION SENSOR “A” CIRCUIT

DTC DETECTING CONDITION:

- Immediately at fault recognition
- GENERAL DESCRIPTION <Ref. to GD(H4DOTC)-102, DTC P0335 CRANKSHAFT POSITION SENSOR “A” CIRCUIT, Diagnostic Trouble Code (DTC) Detecting Criteria.>

TROUBLE SYMPTOM:

- Engine stalls.
- Failure of engine to start

CAUTION:

After servicing or replacing faulty parts, perform Clear Memory Mode <Ref. to EN(H4DOTC)(diag)-55, OPERATION, Clear Memory Mode.>, and Inspection Mode <Ref. to EN(H4DOTC)(diag)-44, PROCEDURE, Inspection Mode.>.

WIRING DIAGRAM:

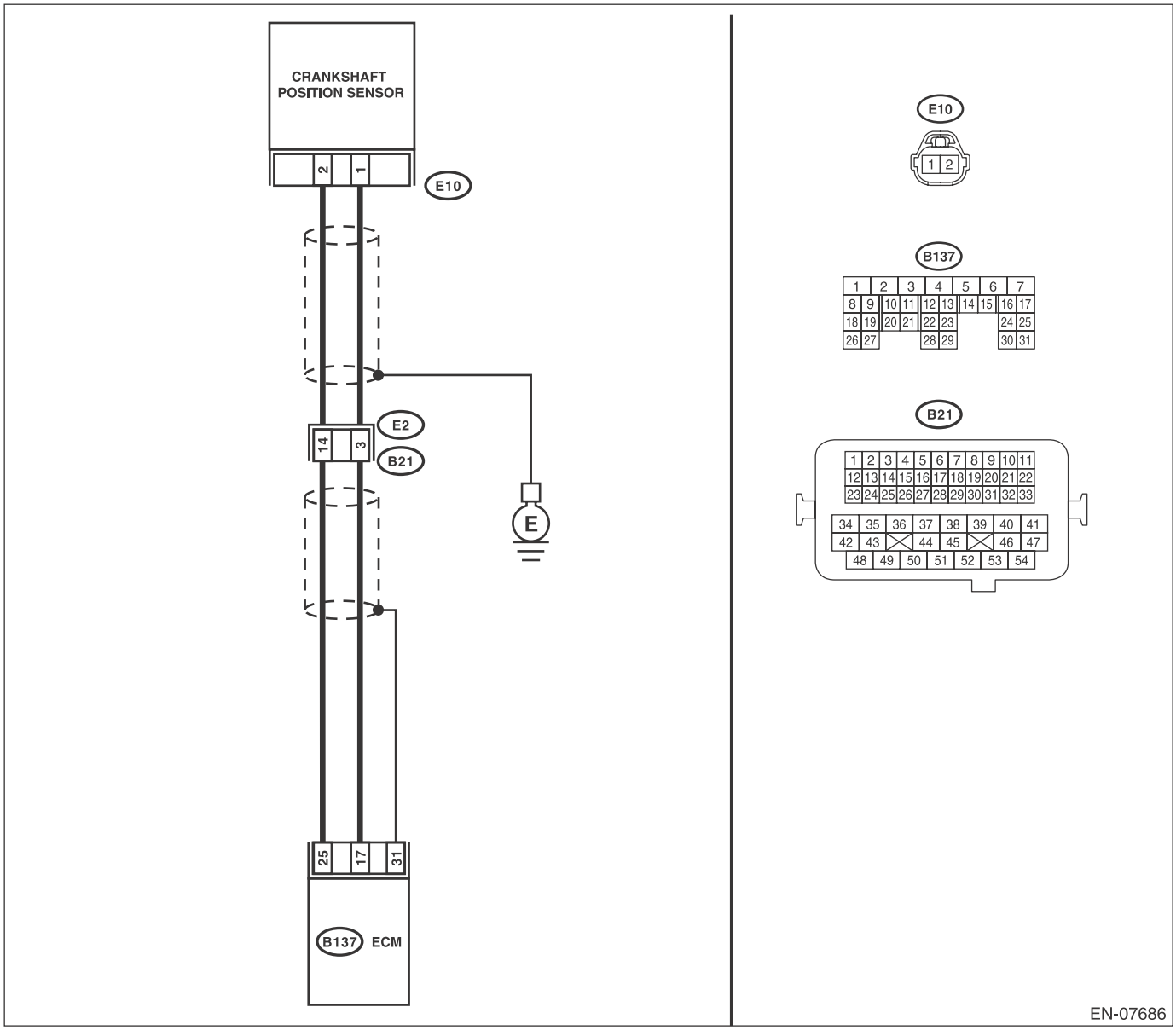

	Step	Check	Yes	No
1	**CHECK CONDITION OF CRANKSHAFT POSITION SENSOR.**	Is the crankshaft position sensor installation bolt tightened securely?	Go to step **2**.	Tighten the crankshaft position sensor installation bolt securely.
2	**CHECK CRANKSHAFT POSITION SENSOR.** 1) Turn the ignition switch to OFF. 2) Remove the crankshaft position sensor. 3) Measure the resistance between terminals of crankshaft position sensor. ***Terminals*** ***No. 1 — No. 2:***	Is the resistance between 1 and 4 kΩ?	Go to step **3**.	Replace the crankshaft position sensor. <Ref. to FU(H4DOTC)-33, Crankshaft Position Sensor.>
3	**CHECK HARNESS BETWEEN ECM AND CRANKSHAFT POSITION SENSOR CONNECTOR.** 1) Disconnect the connector from ECM. 2) Measure the resistance of harness between ECM and crankshaft position sensor connector. ***Connector & terminal*** ***(B137) No. 17 — (E10) No. 1:*** ***(B137) No. 25 — (E10) No. 2:***	Is the resistance less than 1 Ω?	Repair the poor contact of ECM and crankshaft position sensor connector.	Repair the harness and connector. NOTE: In this case, repair the following item: • Open circuit in harness between ECM and crankshaft position sensor connector • Poor contact of coupling connector

BE:DTC P0336 CRANKSHAFT POSITION SENSOR “A” CIRCUIT RANGE/PERFORMANCE

DTC DETECTING CONDITION:

- Detected when two consecutive driving cycles with fault occur.
- GENERAL DESCRIPTION <Ref. to GD(H4DOTC)-104, DTC P0336 CRANKSHAFT POSITION SENSOR “A” CIRCUIT RANGE/PERFORMANCE, Diagnostic Trouble Code (DTC) Detecting Criteria.>

TROUBLE SYMPTOM:

- Engine stalls.
- Failure of engine to start

CAUTION:

After servicing or replacing faulty parts, perform Clear Memory Mode <Ref. to EN(H4DOTC)(diag)-55, OPERATION, Clear Memory Mode.>, and Inspection Mode <Ref. to EN(H4DOTC)(diag)-44, PROCEDURE, Inspection Mode.>.

WIRING DIAGRAM:

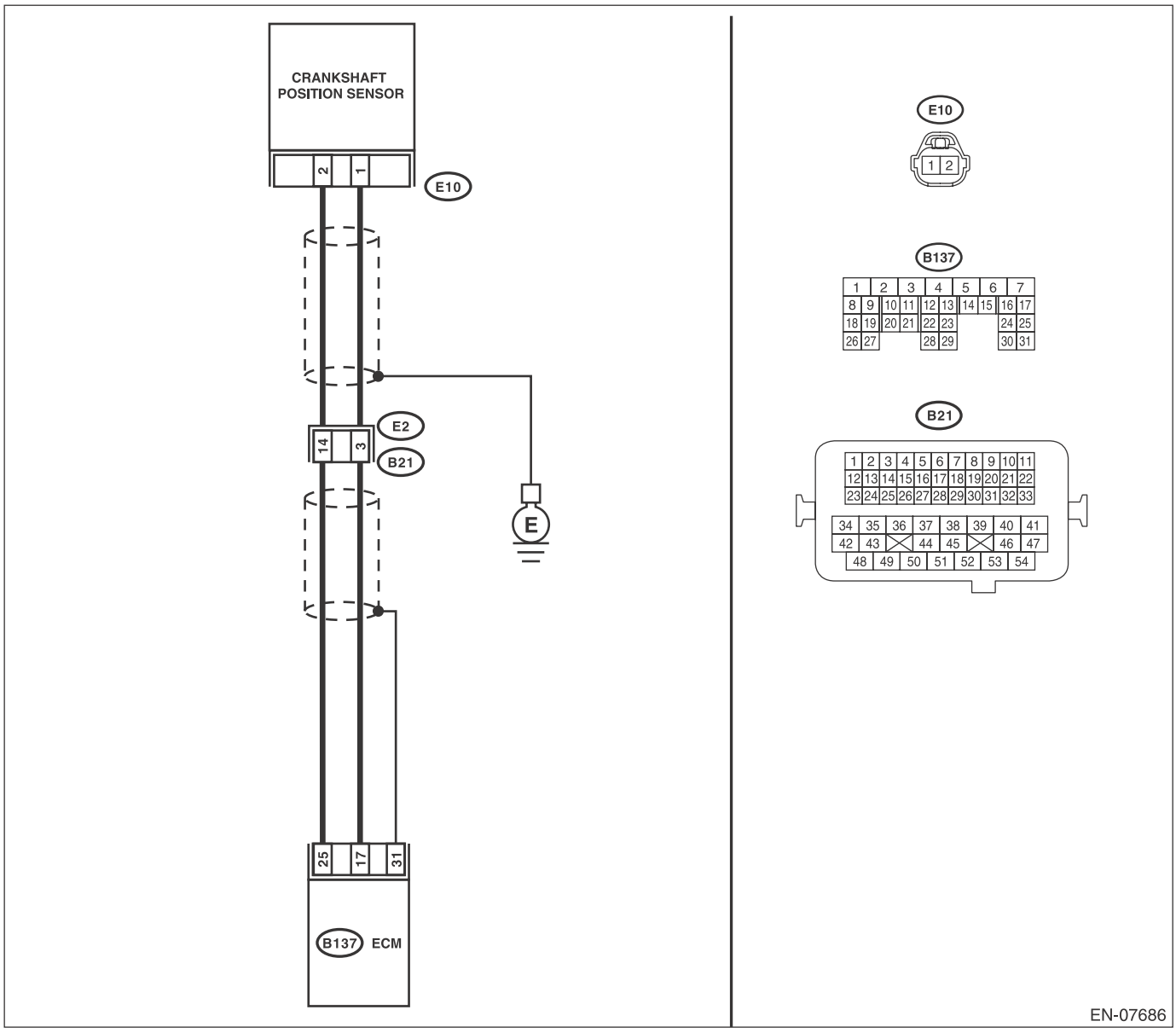

	Step	Check	Yes	No
1	**CHECK CONDITION OF CRANKSHAFT POSITION SENSOR.** Turn the ignition switch to OFF.	Is the crankshaft position sensor installation bolt tightened securely?	Go to step **2**.	Tighten the crankshaft position sensor installation bolt securely.
2	**CHECK CRANK SPROCKET.** Remove the timing belt cover. <Ref. to ME(H4DOTC)-46, REMOVAL, Timing Belt Cover.>	Are crank sprocket teeth cracked or damaged?	Replace the crank sprocket. <Ref. to ME(H4DOTC)-61, Crank Sprocket.>	Go to step **3**.
3	**CHECK INSTALLATION CONDITION OF TIMING BELT.** Turn the crankshaft using ST, and align the alignment mark on crank sprocket with alignment mark on cylinder block. ST 499987500 CRANKSHAFT SOCKET	Is the timing belt dislocated from its proper position?	Repair the installation condition of timing belt. <Ref. to ME(H4DOTC)-51, Timing Belt.>	Replace the crankshaft position sensor. <Ref. to FU(H4DOTC)-33, Crankshaft Position Sensor.>

BF:DTC P0340 CAMSHAFT POSITION SENSOR “A” CIRCUIT (BANK 1 OR SINGLE SENSOR)

DTC DETECTING CONDITION:

- Immediately at fault recognition
- GENERAL DESCRIPTION <Ref. to GD(H4DOTC)-106, DTC P0340 CAMSHAFT POSITION SENSOR “A” CIRCUIT (BANK 1 OR SINGLE SENSOR), Diagnostic Trouble Code (DTC) Detecting Criteria.>

TROUBLE SYMPTOM:

- Engine stalls.
- Failure of engine to start

CAUTION:

After servicing or replacing faulty parts, perform Clear Memory Mode <Ref. to EN(H4DOTC)(diag)-55, OPERATION, Clear Memory Mode.>, and Inspection Mode <Ref. to EN(H4DOTC)(diag)-44, PROCEDURE, Inspection Mode.>.

WIRING DIAGRAM:

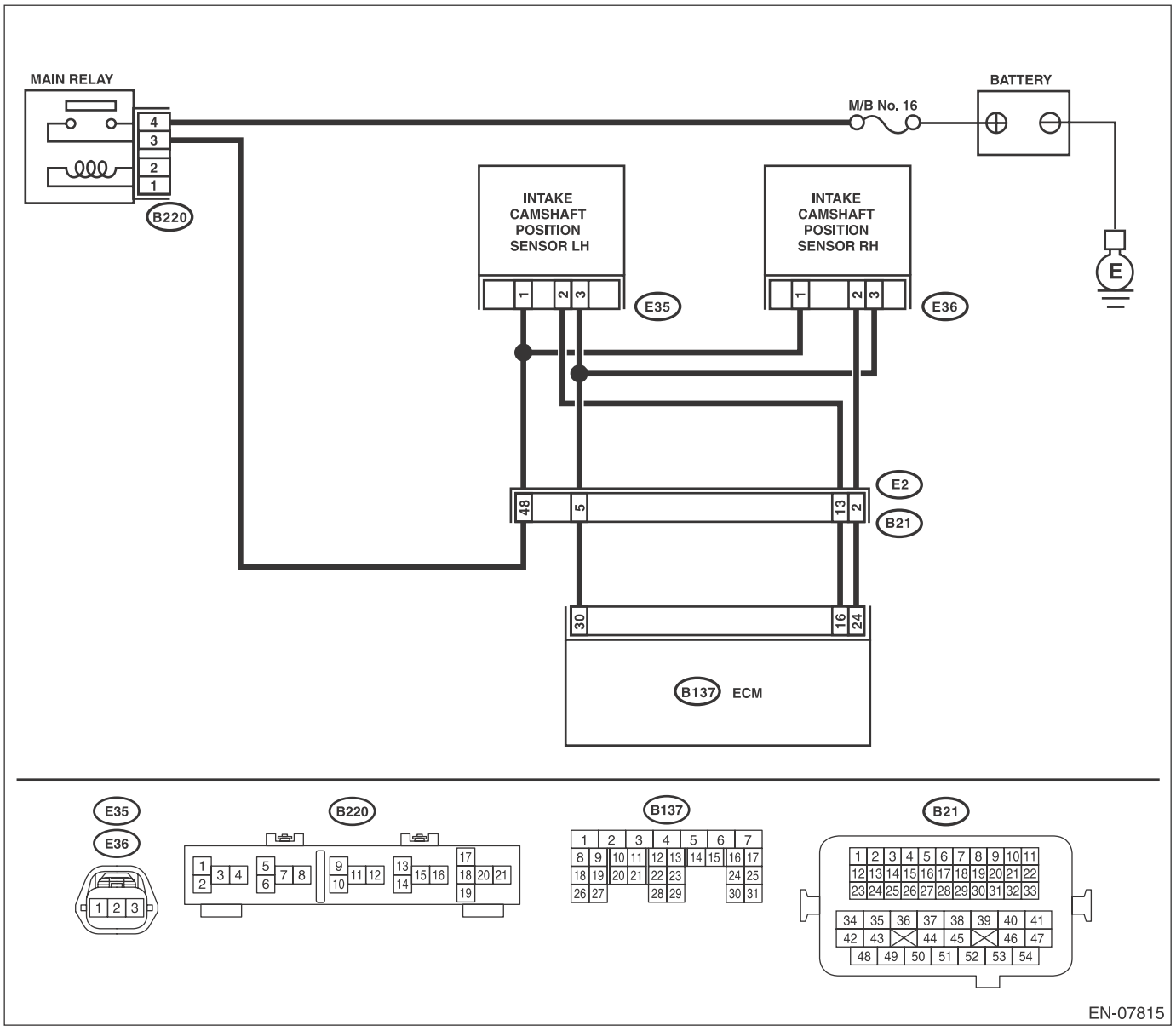

	Step	Check	Yes	No
1	**CHECK POWER SUPPLY OF CAMSHAFT POSITION SENSOR.** 1) Turn the ignition switch to OFF. 2) Disconnect the connector from camshaft position sensor. 3) Turn the ignition switch to ON. 4) Measure the voltage between camshaft position sensor connector and engine ground. ***Connector & terminal*** ***(E36) No. 1 (+) — Engine ground (–):***	Is the voltage 10 V or more?	Go to step **2**.	Repair the harness and connector. NOTE: In this case, repair the following item: • Open circuit or short circuit to ground in harness between main relay connector and camshaft position sensor connector • Poor contact of coupling connector
2	**CHECK HARNESS BETWEEN ECM AND CAMSHAFT POSITION SENSOR CONNECTOR.** 1) Turn the ignition switch to OFF. 2) Disconnect the connector from ECM. 3) Measure the resistance between ECM and camshaft position sensor connector. ***Connector & terminal*** ***(B137) No. 24 — (E36) No. 2:*** ***(B137) No. 30 — (E36) No. 3:***	Is the resistance less than 1 Ω?	Go to step **3**.	Repair the harness and connector. NOTE: In this case, repair the following item: • Open circuit in harness between ECM and camshaft position sensor connector • Poor contact of coupling connector
3	**CHECK HARNESS BETWEEN ECM AND CAMSHAFT POSITION SENSOR CONNECTOR.** Measure the resistance between camshaft position sensor connector and engine ground. ***Connector & terminal*** ***(E36) No. 2 — Engine ground:***	Is the resistance 1 MΩ or more?	Go to step **4**.	Repair short circuit to ground in harness between ECM and camshaft position sensor connector.
4	**CHECK HARNESS BETWEEN ECM AND CAMSHAFT POSITION SENSOR CONNECTOR.** Measure the voltage between camshaft position sensor connector and engine ground. ***Connector & terminal*** ***(E36) No. 2 (+) — Engine ground (–):***	Is the voltage 5 V or more?	Repair the short circuit to power in the harness between ECM and camshaft position sensor connector.	Go to step **5**.
5	**CHECK CONDITION OF CAMSHAFT POSITION SENSOR.**	Is the camshaft position sensor installation bolt tightened securely?	Go to step **6**.	Tighten the camshaft position sensor installation bolt securely.
6	**CHECK CAMSHAFT POSITION SENSOR.** Check the waveform of the camshaft position sensor. <Ref. to EN(H4DOTC)(diag)-19, Engine Control Module (ECM) I/O Signal.>	Is there any abnormality in waveform?	Replace the camshaft position sensor. <Ref. to FU(H4DOTC)-35, Camshaft Position Sensor.>	Repair the following item. • Poor contact of ECM connector • Poor contact of camshaft position sensor connector • Poor contact of coupling connector

BG:DTC P0345 CAMSHAFT POSITION SENSOR “A” CIRCUIT (BANK 2)

DTC DETECTING CONDITION:

- Immediately at fault recognition
- GENERAL DESCRIPTION <Ref. to GD(H4DOTC)-107, DTC P0345 CAMSHAFT POSITION SENSOR “A” CIRCUIT (BANK 2), Diagnostic Trouble Code (DTC) Detecting Criteria.>

TROUBLE SYMPTOM:

- Engine stalls.
- Failure of engine to start

CAUTION:

After servicing or replacing faulty parts, perform Clear Memory Mode <Ref. to EN(H4DOTC)(diag)-55, OPERATION, Clear Memory Mode.>, and Inspection Mode <Ref. to EN(H4DOTC)(diag)-44, PROCEDURE, Inspection Mode.>.

WIRING DIAGRAM:

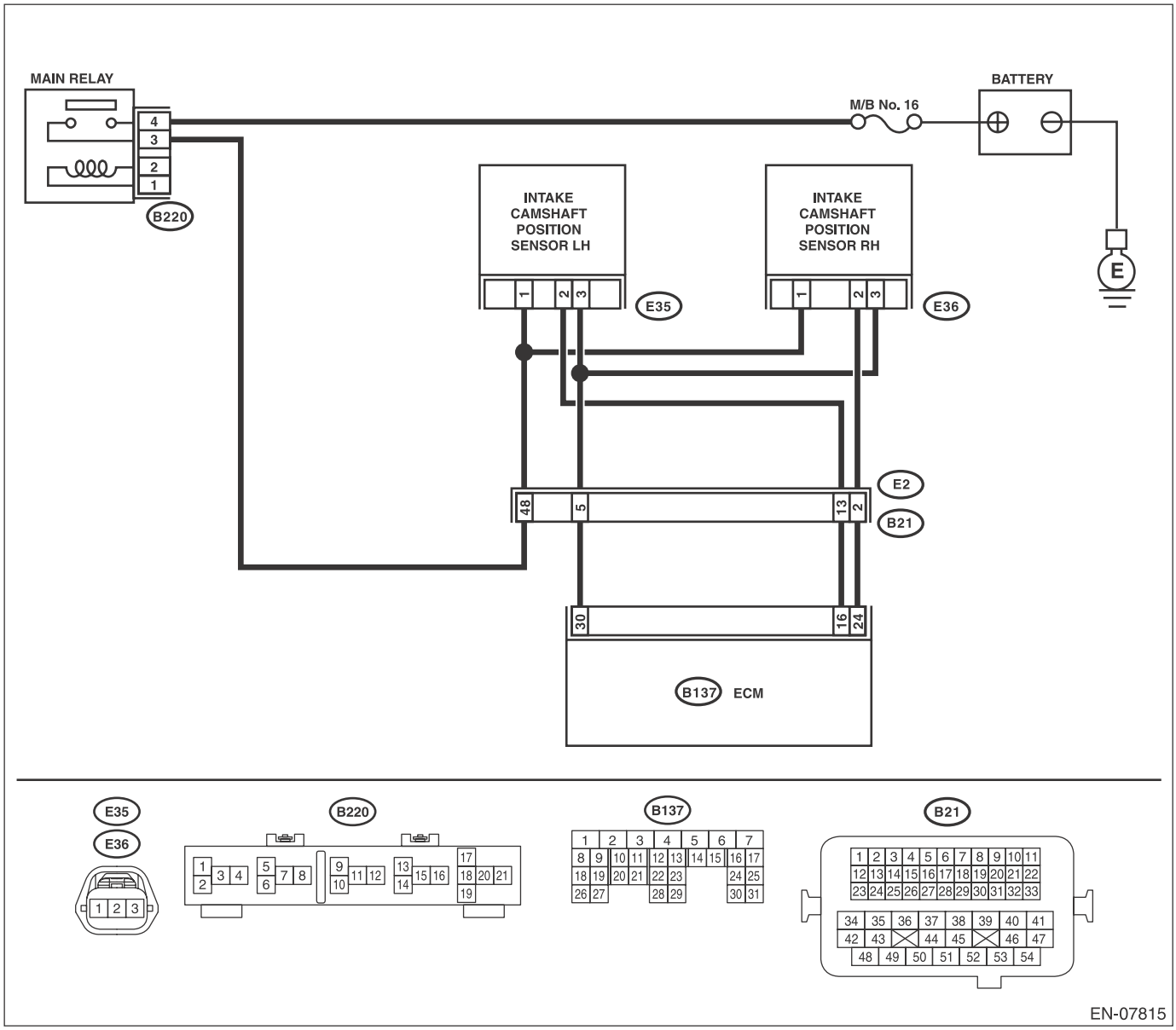

	Step	Check	Yes	No
1	**CHECK POWER SUPPLY OF CAMSHAFT POSITION SENSOR.** 1) Turn the ignition switch to OFF. 2) Disconnect the connector from camshaft position sensor. 3) Turn the ignition switch to ON. 4) Measure the voltage between camshaft position sensor connector and engine ground. ***Connector & terminal*** ***(E35) No. 1 (+) — Engine ground (–):***	Is the voltage 10 V or more?	Go to step **2**.	Repair the harness and connector. NOTE: In this case, repair the following item: • Open circuit or short circuit to ground in harness between main relay connector and camshaft position sensor connector • Poor contact of coupling connector
2	**CHECK HARNESS BETWEEN ECM AND CAMSHAFT POSITION SENSOR CONNECTOR.** 1) Turn the ignition switch to OFF. 2) Disconnect the connector from ECM. 3) Measure the resistance between ECM and camshaft position sensor connector. ***Connector & terminal*** ***(B137) No. 16 — (E35) No. 2:*** ***(B137) No. 30 — (E35) No. 3:***	Is the resistance less than 1 Ω?	Go to step **3**.	Repair the harness and connector. NOTE: In this case, repair the following item: • Open circuit in harness between ECM and camshaft position sensor connector • Poor contact of coupling connector
3	**CHECK HARNESS BETWEEN ECM AND CAMSHAFT POSITION SENSOR CONNECTOR.** Measure the resistance between camshaft position sensor connector and engine ground. ***Connector & terminal*** ***(E35) No. 2 — Engine ground:***	Is the resistance 1 MΩ or more?	Go to step **4**.	Repair short circuit to ground in harness between ECM and camshaft position sensor connector.
4	**CHECK HARNESS BETWEEN ECM AND CAMSHAFT POSITION SENSOR CONNECTOR.** Measure the voltage between camshaft position sensor connector and engine ground. ***Connector & terminal*** ***(E35) No. 2 (+) — Engine ground (–):***	Is the voltage 5 V or more?	Repair the short circuit to power in the harness between ECM and camshaft position sensor connector.	Go to step **5**.
5	**CHECK CONDITION OF CAMSHAFT POSITION SENSOR.**	Is the camshaft position sensor installation bolt tightened securely?	Go to step **6**.	Tighten the camshaft position sensor installation bolt securely.
6	**CHECK CAMSHAFT POSITION SENSOR.** Check the waveform of the camshaft position sensor. <Ref. to EN(H4DOTC)(diag)-19, Engine Control Module (ECM) I/O Signal.>	Is there any abnormality in waveform?	Replace the camshaft position sensor. <Ref. to FU(H4DOTC)-35, Camshaft Position Sensor.>	Repair the following item. • Poor contact of ECM connector • Poor contact of camshaft position sensor connector • Poor contact of coupling connector

BH:DTC P0365 CAMSHAFT POSITION SENSOR “B” CIRCUIT (BANK 1)

DTC DETECTING CONDITION:

- Immediately at fault recognition
- GENERAL DESCRIPTION <Ref. to GD(H4DOTC)-108, DTC P0365 CAMSHAFT POSITION SENSOR “B” CIRCUIT (BANK 1), Diagnostic Trouble Code (DTC) Detecting Criteria.>

TROUBLE SYMPTOM:

- Engine stalls.
- Failure of engine to start

CAUTION:

After servicing or replacing faulty parts, perform Clear Memory Mode <Ref. to EN(H4DOTC)(diag)-55, OPERATION, Clear Memory Mode.>, and Inspection Mode <Ref. to EN(H4DOTC)(diag)-44, PROCEDURE, Inspection Mode.>.

WIRING DIAGRAM:

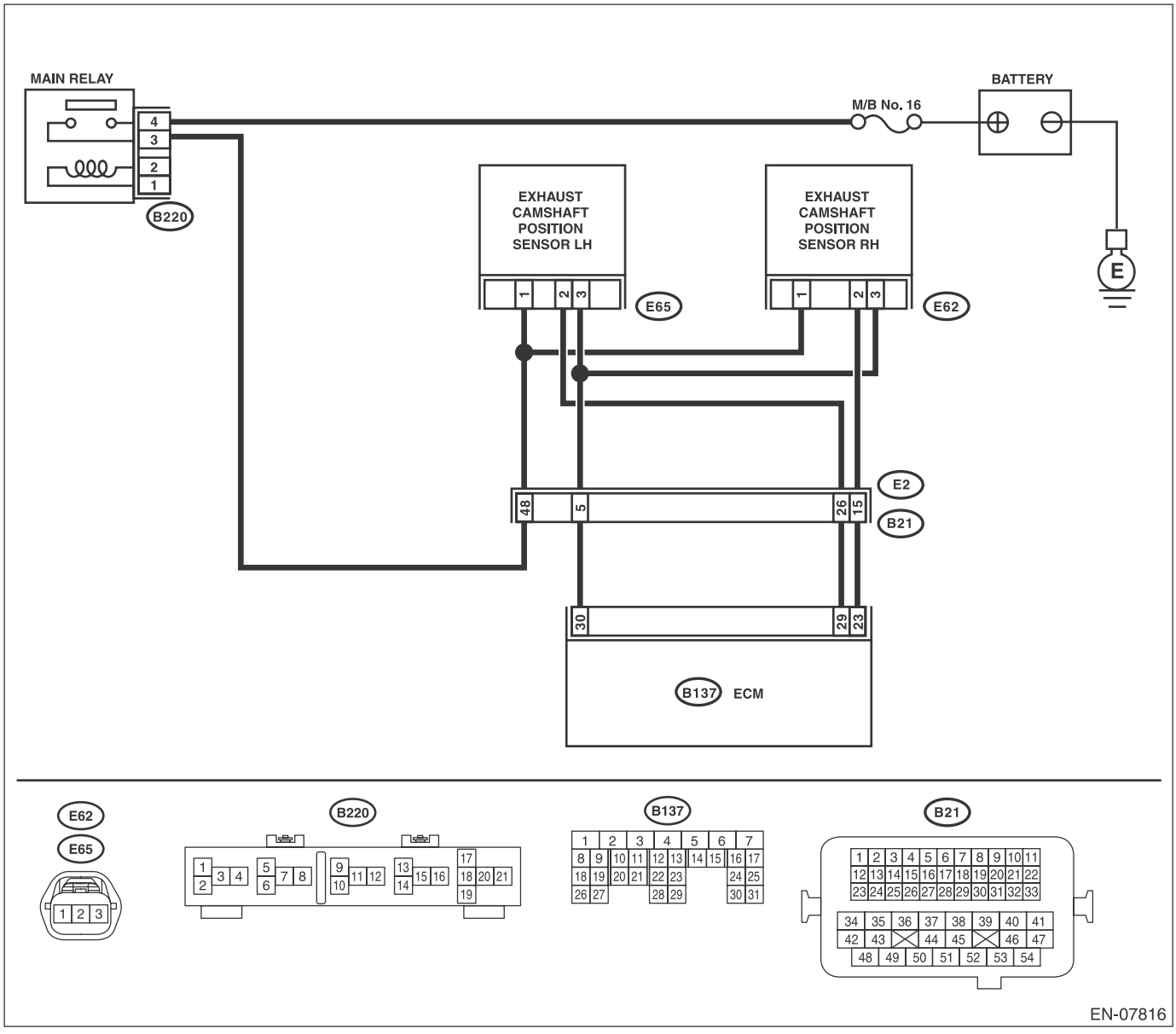

	Step	Check	Yes	No
1	**CHECK POWER SUPPLY OF CAMSHAFT POSITION SENSOR.** 1) Turn the ignition switch to OFF. 2) Disconnect the connector from camshaft position sensor. 3) Turn the ignition switch to ON. 4) Measure the voltage between camshaft position sensor connector and engine ground. ***Connector & terminal*** ***(E62) No. 1 (+) — Engine ground (–):***	Is the voltage 10 V or more?	Go to step **2**.	Repair the harness and connector. NOTE: In this case, repair the following item: • Open circuit or short circuit to ground in harness between main relay connector and camshaft position sensor connector • Poor contact of coupling connector
2	**CHECK HARNESS BETWEEN ECM AND CAMSHAFT POSITION SENSOR CONNECTOR.** 1) Turn the ignition switch to OFF. 2) Disconnect the connector from ECM. 3) Measure the resistance between ECM and camshaft position sensor connector. ***Connector & terminal*** ***(B137) No. 23 — (E62) No. 2:*** ***(B137) No. 30 — (E62) No. 3:***	Is the resistance less than 1 Ω?	Go to step **3**.	Repair the harness and connector. NOTE: In this case, repair the following item: • Open circuit in harness between ECM and camshaft position sensor connector • Poor contact of coupling connector
3	**CHECK HARNESS BETWEEN ECM AND CAMSHAFT POSITION SENSOR CONNECTOR.** Measure the resistance between camshaft position sensor connector and engine ground. ***Connector & terminal*** ***(E62) No. 2 — Engine ground:***	Is the resistance 1 MΩ or more?	Go to step **4**.	Repair short circuit to ground in harness between ECM and camshaft position sensor connector.
4	**CHECK HARNESS BETWEEN ECM AND CAMSHAFT POSITION SENSOR CONNECTOR.** Measure the voltage between camshaft position sensor connector and engine ground. ***Connector & terminal*** ***(E62) No. 2 (+) — Engine ground (–):***	Is the voltage 5 V or more?	Repair the short circuit to power in the harness between ECM and camshaft position sensor connector.	Go to step **5**.
5	**CHECK CONDITION OF CAMSHAFT POSITION SENSOR.**	Is the camshaft position sensor installation bolt tightened securely?	Go to step **6**.	Tighten the camshaft position sensor installation bolt securely.
6	**CHECK CAMSHAFT POSITION SENSOR.** Check the waveform of the camshaft position sensor. <Ref. to EN(H4DOTC)(diag)-19, Engine Control Module (ECM) I/O Signal.>	Is there any abnormality in waveform?	Replace the camshaft position sensor. <Ref. to FU(H4DOTC)-35, Camshaft Position Sensor.>	Repair the following item. • Poor contact of ECM connector • Poor contact of camshaft position sensor connector • Poor contact of coupling connector

BI: DTC P0390 CAMSHAFT POSITION SENSOR “B” CIRCUIT (BANK 2)

DTC DETECTING CONDITION:

- Immediately at fault recognition
- GENERAL DESCRIPTION <Ref. to GD(H4DOTC)-109, DTC P0390 CAMSHAFT POSITION SENSOR “B” CIRCUIT (BANK 2), Diagnostic Trouble Code (DTC) Detecting Criteria.>

TROUBLE SYMPTOM:

- Engine stalls.
- Failure of engine to start

CAUTION:

After servicing or replacing faulty parts, perform Clear Memory Mode <Ref. to EN(H4DOTC)(diag)-55, OPERATION, Clear Memory Mode.>, and Inspection Mode <Ref. to EN(H4DOTC)(diag)-44, PROCEDURE, Inspection Mode.>.

WIRING DIAGRAM:

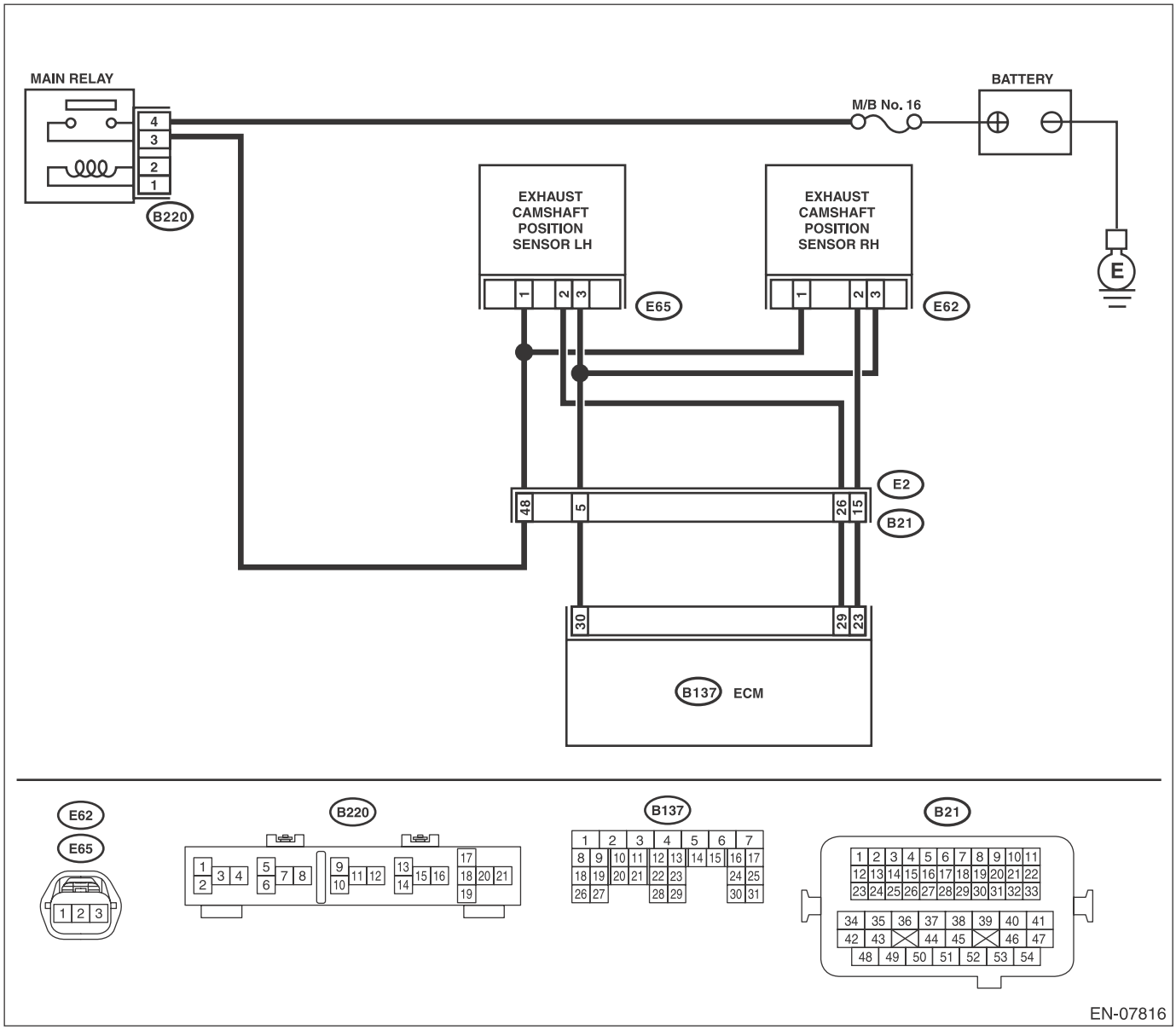

	Step	Check	Yes	No
1	**CHECK POWER SUPPLY OF CAMSHAFT POSITION SENSOR.** 1) Turn the ignition switch to OFF. 2) Disconnect the connector from camshaft position sensor. 3) Turn the ignition switch to ON. 4) Measure the voltage between camshaft position sensor connector and engine ground. ***Connector & terminal*** ***(E65) No. 1 (+) — Engine ground (–):***	Is the voltage 10 V or more?	Go to step **2**.	Repair the harness and connector. NOTE: In this case, repair the following item: • Open circuit or short circuit to ground in harness between main relay connector and camshaft position sensor connector • Poor contact of coupling connector
2	**CHECK HARNESS BETWEEN ECM AND CAMSHAFT POSITION SENSOR CONNECTOR.** 1) Turn the ignition switch to OFF. 2) Disconnect the connector from ECM. 3) Measure the resistance between ECM and camshaft position sensor connector. ***Connector & terminal*** ***(B137) No. 29 — (E65) No. 2:*** ***(B137) No. 30 — (E65) No. 3:***	Is the resistance less than 1 Ω?	Go to step **3**.	Repair the harness and connector. NOTE: In this case, repair the following item: • Open circuit in harness between ECM and camshaft position sensor connector • Poor contact of coupling connector
3	**CHECK HARNESS BETWEEN ECM AND CAMSHAFT POSITION SENSOR CONNECTOR.** Measure the resistance between camshaft position sensor connector and engine ground. ***Connector & terminal*** ***(E65) No. 2 — Engine ground:***	Is the resistance 1 MΩ or more?	Go to step **4**.	Repair short circuit to ground in harness between ECM and camshaft position sensor connector.
4	**CHECK HARNESS BETWEEN ECM AND CAMSHAFT POSITION SENSOR CONNECTOR.** Measure the voltage between camshaft position sensor connector and engine ground. ***Connector & terminal*** ***(E65) No. 2 (+) — Engine ground (–):***	Is the voltage 5 V or more?	Repair the short circuit to power in the harness between ECM and camshaft position sensor connector.	Go to step **5**.
5	**CHECK CONDITION OF CAMSHAFT POSITION SENSOR.**	Is the camshaft position sensor installation bolt tightened securely?	Go to step **6**.	Tighten the camshaft position sensor installation bolt securely.
6	**CHECK CAMSHAFT POSITION SENSOR.** Check the waveform of the camshaft position sensor. <Ref. to EN(H4DOTC)(diag)-19, Engine Control Module (ECM) I/O Signal.>	Is there any abnormality in waveform?	Replace the camshaft position sensor. <Ref. to FU(H4DOTC)-35, Camshaft Position Sensor.>	Repair the following item. • Poor contact of ECM connector • Poor contact of camshaft position sensor connector • Poor contact of coupling connector

BJ:DTC P0420 CATALYST SYSTEM EFFICIENCY BELOW THRESHOLD (BANK 1)

DTC DETECTING CONDITION:

- Detected when two consecutive driving cycles with fault occur.
- GENERAL DESCRIPTION <Ref. to GD(H4DOTC)-110, DTC P0420 CATALYST SYSTEM EFFICIENCY BELOW THRESHOLD (BANK 1), Diagnostic Trouble Code (DTC) Detecting Criteria.>

TROUBLE SYMPTOM:

- Engine stalls.
- Idle mixture is out of specifications.

CAUTION:

After servicing or replacing faulty parts, perform Clear Memory Mode <Ref. to EN(H4DOTC)(diag)-55, OPERATION, Clear Memory Mode.>, and Inspection Mode <Ref. to EN(H4DOTC)(diag)-44, PROCEDURE, Inspection Mode.>.

WIRING DIAGRAM:

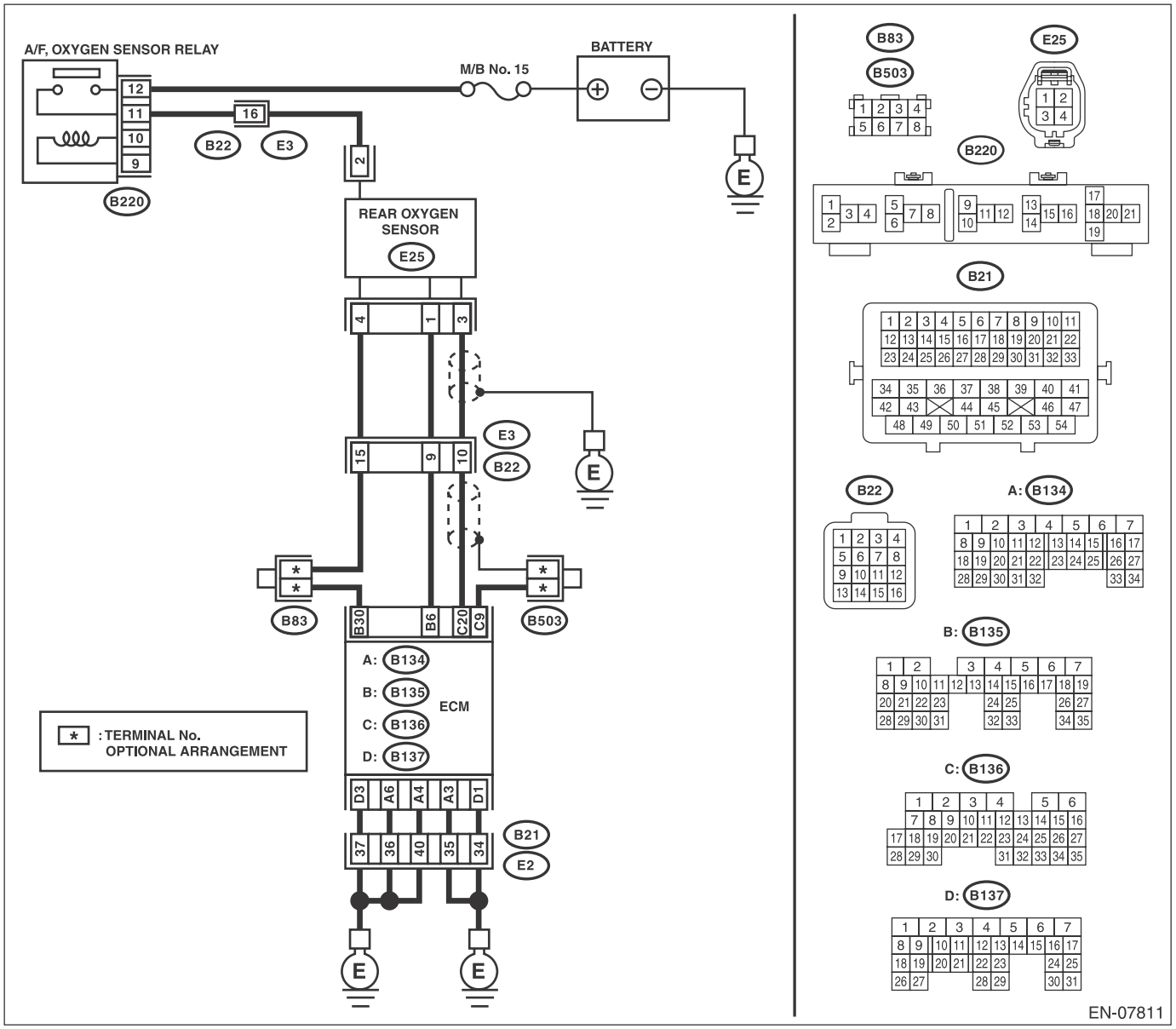

	Step	Check	Yes	No
1	**CHECK EXHAUST SYSTEM.** Check for gas leaks or air suction caused by loose or dislocated nuts and bolts, and open hole at exhaust pipes. NOTE: Check the following positions. • Between cylinder head and front exhaust pipe • Between front exhaust pipe and front catalytic converter • Between front catalytic converter and rear catalytic converter • Loose or improperly attached front oxygen (A/F) sensor or rear oxygen sensor	Is there any fault in exhaust system?	Repair or replace the exhaust system. <Ref. to EX(H4DOTC)-2, General Description.>	Go to step **2**.
2	**CHECK WAVEFORM DATA ON THE SUBARU SELECT MONITOR (WHILE DRIVING).** 1) Drive at a constant speed of 80 — 112 km/h (50 — 70 MPH). 2) After 5 minutes have elapsed in the condition of step 1), use the Subaru Select Monitor while still driving to read the waveform data. • At normal condition 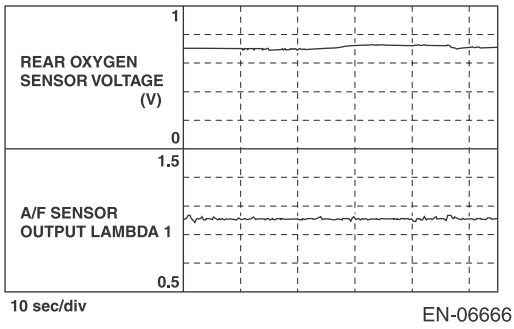 • At abnormal condition (numerous inversion) 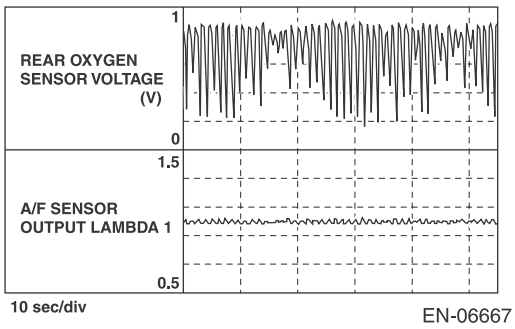	Is a normal waveform displayed?	Even if DTC is detected, the circuit has returned to a normal condition at this time. Reproduce the failure, and then perform the diagnosis again. NOTE: In this case, temporary poor contact of connector, temporary open or short circuit of harness may be the cause.	Go to step **3**.

	Step	Check	Yes	No
3	**CHECK WAVEFORM DATA ON THE SUBARU SELECT MONITOR (WHILE IDLING).** 1) Run the engine at idle. 2) In the state of step 1), read the waveform data using the Subaru Select Monitor. • At normal condition 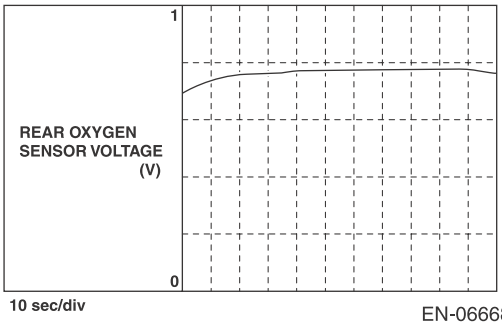 • At abnormal condition 1 (numerous inversion) 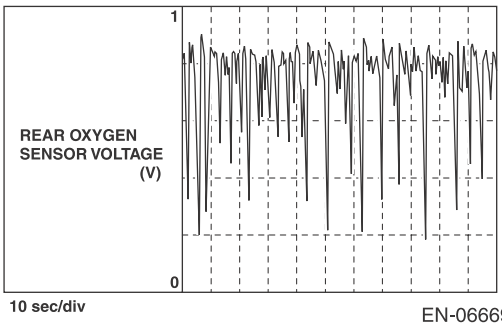 • At abnormal condition 2 (noise input) 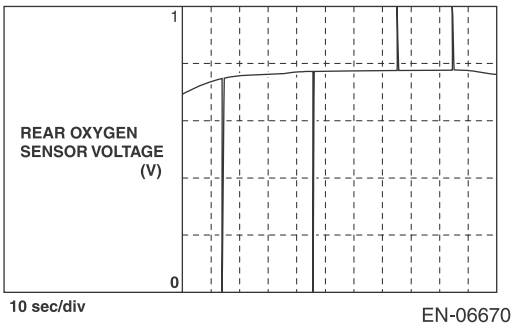	Is a normal waveform displayed?	Go to step **4**.	• The waveform is displayed at abnormal condition 1:Go to step **4**. • The waveform is displayed at abnormal condition 2:Go to step **5**.
4	**CHECK CATALYTIC CONVERTER.**	Is the catalytic converter damaged?	Replace the catalytic converter. <Ref. to EC(H4DOTC)-3, Front Catalytic Converter.>	Go to step **5**.
5	**CHECK REAR OXYGEN SENSOR CONNECTOR AND COUPLING CONNECTOR.**	Has water entered the connector?	Completely remove any water inside.	Go to step **6**.

Step		Check	Yes	No
6	**CHECK HARNESS BETWEEN ECM AND REAR OXYGEN SENSOR CONNECTOR.** 1) Turn the ignition switch to OFF. 2) Disconnect the connector from ECM and rear oxygen sensor. 3) Measure the resistance of harness between ECM and rear oxygen sensor connector. ***Connector & terminal*** ***(B136) No. 20 — (E25) No. 3:*** ***(B135) No. 30 — (E25) No. 4:***	Is the resistance less than 1 Ω?	Go to step **7**.	Repair the harness and connector. NOTE: Repair the following locations. • Open circuit in harness between ECM and rear oxygen sensor connector • Poor contact of coupling connector
7	**CHECK HARNESS BETWEEN ECM AND REAR OXYGEN SENSOR CONNECTOR.** 1) Connect the connector to ECM. 2) Turn the ignition switch to ON. 3) Measure the voltage between rear oxygen sensor connector and chassis ground. ***Connector & terminal*** ***(E25) No. 3 (+) — Chassis ground (–):***	Is the voltage 0.2 — 0.5 V?	Go to step **8**.	Repair the harness and connector. NOTE: Repair the following locations. • Open circuit in harness between ECM and rear oxygen sensor connector • Poor contact of coupling connector • Poor contact of ECM connector
8	**CHECK REAR OXYGEN SENSOR SHIELD.** 1) Turn the ignition switch to OFF. 2) Expose the rear oxygen sensor connector body side harness sensor shield. 3) Measure the resistance between sensor shield and chassis ground.	Is the resistance less than 1 Ω?	Replace the rear oxygen sensor. <Ref. to FU(H4DOTC)-55, Rear Oxygen Sensor.>	Repair the open circuit of rear oxygen sensor harness.

BK:DTC P0442 EVAPORATIVE EMISSION CONTROL SYSTEM LEAK DETECTED (SMALL LEAK)

DTC DETECTING CONDITION:

- Detected when two consecutive driving cycles with fault occur.
- GENERAL DESCRIPTION <Ref. to GD(H4DOTC)-112, DTC P0442 EVAPORATIVE EMISSION CONTROL SYSTEM LEAK DETECTED (SMALL LEAK), Diagnostic Trouble Code (DTC) Detecting Criteria.>

TROUBLE SYMPTOM:

- Fuel odor
- There is a hole of more than 1.0 mm (0.04 in) dia. in evaporation system or fuel tank.

CAUTION:

After servicing or replacing faulty parts, perform Clear Memory Mode <Ref. to EN(H4DOTC)(diag)-55, OPERATION, Clear Memory Mode.>, and Inspection Mode <Ref. to EN(H4DOTC)(diag)-44, PROCEDURE, Inspection Mode.>.

WIRING DIAGRAM:

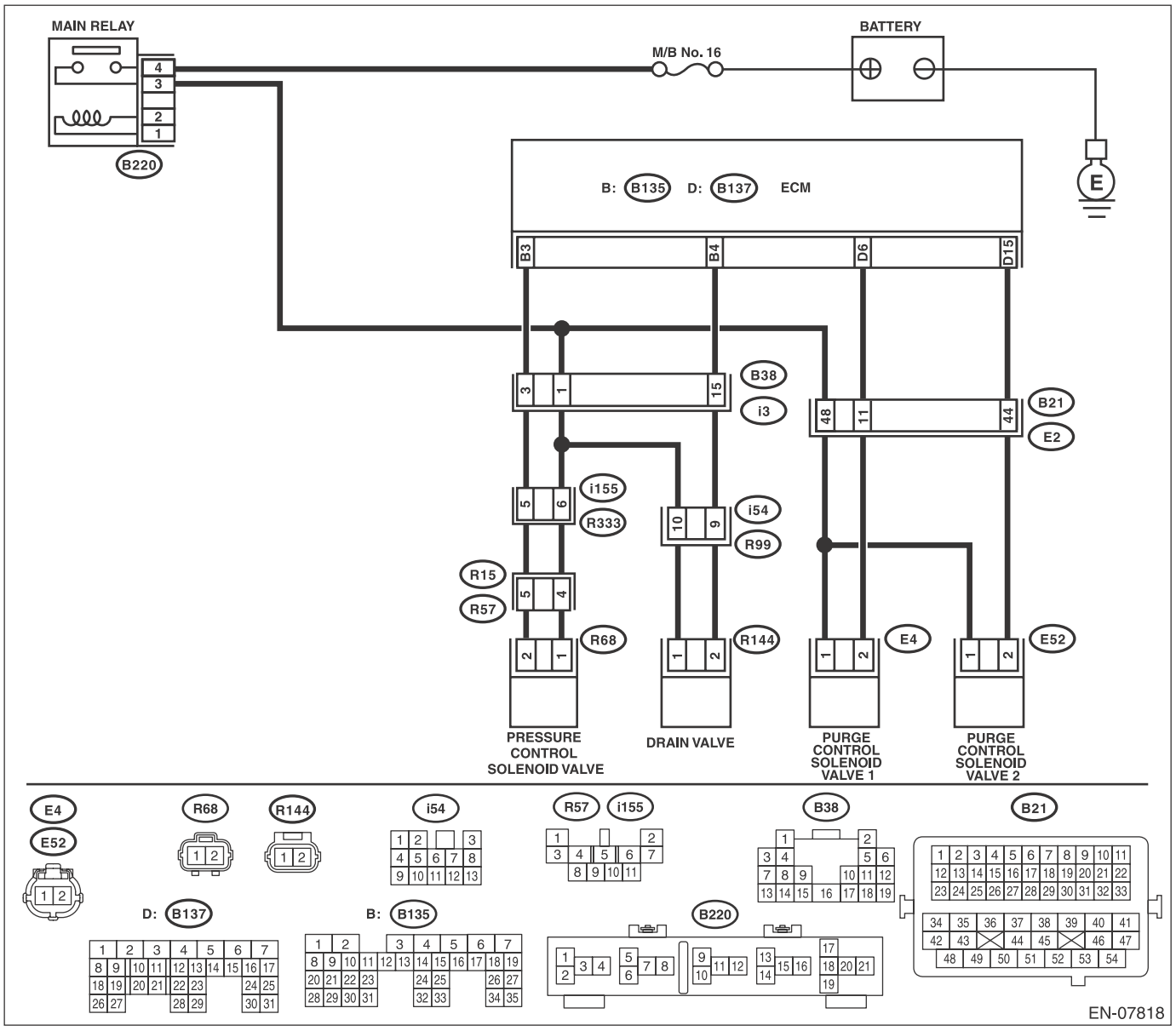

	Step	Check	Yes	No
1	**CHECK FUEL FILLER CAP.** 1) Turn the ignition switch to OFF. 2) Check the fuel filler cap. NOTE: The DTC is stored in memory if fuel filler cap is or was loose or if the cap chain has caught while tightening.	Is the fuel filler cap tightened securely?	Go to step **2**.	Tighten fuel filler cap securely.
2	**CHECK FUEL FILLER CAP.**	Is the fuel filler cap genuine?	Go to step **3**.	Replace with a genuine fuel filler cap.
3	**CHECK FUEL FILLER PIPE GASKET.**	Is there any damage to the seal between fuel filler cap and fuel filler pipe?	Repair or replace the fuel filler cap and fuel filler pipe. <Ref. to FU(H4DOTC)-74, Fuel Filler Pipe.>	Go to step **4**.
4	**CHECK DRAIN VALVE OPERATION.** 1) Install the delivery (test) mode fuse. 2) Turn the ignition switch to ON. 3) Perform operation check for the drain valve using the Subaru Select Monitor. NOTE: Drain valve operation can be executed using Subaru Select Monitor. For detailed procedures, refer to "SYSTEM OPERATION CHECK MODE". <Ref. to EN(H4DOTC)(diag)-56, System Operation Check Mode.>	Does the drain valve operate?	Go to step **5**.	Replace the drain valve. <Ref. to EC(H4DOTC)-22, Drain Valve.>
5	**CHECK OPERATION OF PURGE CONTROL SOLENOID VALVE.** Perform operation check for the purge control solenoid valve using the Subaru Select Monitor. NOTE: Purge control solenoid valve operation can be executed using Subaru Select Monitor. For detailed procedures, refer to "SYSTEM OPERATION CHECK MODE". <Ref. to EN(H4DOTC)(diag)-56, System Operation Check Mode.>	Does the purge control solenoid valve operate?	Go to step **6**.	Replace the purge control solenoid valve. <Ref. to EC(H4DOTC)-9, Purge Control Solenoid Valve.>
6	**CHECK OPERATION OF PRESSURE CONTROL SOLENOID VALVE.** Perform operation check for the pressure control solenoid valve using the Subaru Select Monitor. NOTE: The pressure control solenoid valve operation can be executed using the Subaru Select Monitor. For detailed procedures, refer to "SYSTEM OPERATION CHECK MODE". <Ref. to EN(H4DOTC)(diag)-56, System Operation Check Mode.>	Does the pressure control solenoid valve operate?	Go to step **7**.	Replace the pressure control solenoid valve. <Ref. to EC(H4DOTC)-19, Pressure Control Solenoid Valve.>
7	**CHECK EVAPORATIVE EMISSION CONTROL SYSTEM LINE.** 1) Turn the ignition switch to OFF. 2) Remove the delivery (test) mode fuse.	Is there any hole of more than 1.0 mm (0.04 in) dia. on evaporation line?	Repair or replace the evaporation line. <Ref. to FU(H4DOTC)-87, Fuel Delivery, Return and Evaporation Lines.>	Go to step **8**.

Step		Check	Yes	No
8	**CHECK CANISTER.**	Is the canister damaged or is there a hole of more than 1.0 mm (0.04 in) dia. in it?	Repair or replace the canister. <Ref. to EC(H4DOTC)-5, Canister.>	Go to step **9**.
9	**CHECK FUEL TANK.** Remove the fuel tank. <Ref. to FU(H4DOTC)-67, Fuel Tank.>	Is the fuel tank damaged or is there any hole of more than 1.0 mm (0.04 in) dia. in it?	Repair or replace the fuel tank. <Ref. to FU(H4DOTC)-67, Fuel Tank.>	Go to step **10**.
10	**CHECK ANY OTHER MECHANICAL TROUBLE IN EVAPORATIVE EMISSION CONTROL SYSTEM.**	Is there any hole of more than 1.0 mm (0.04 in) dia., crack, clogging, or disconnections, bend, misconnection of hoses or pipes in evaporative emission control system?	Repair or replace the hoses or pipes.	Repair the poor contact of ECM connector.

BL:DTC P0447 EVAPORATIVE EMISSION CONTROL SYSTEM VENT CONTROL CIRCUIT OPEN

DTC DETECTING CONDITION:

- Immediately at fault recognition
- GENERAL DESCRIPTION <Ref. to GD(H4DOTC)-128, DTC P0447 EVAPORATIVE EMISSION CONTROL SYSTEM VENT CONTROL CIRCUIT OPEN, Diagnostic Trouble Code (DTC) Detecting Criteria.>

CAUTION:

After servicing or replacing faulty parts, perform Clear Memory Mode <Ref. to EN(H4DOTC)(diag)-55, OPERATION, Clear Memory Mode.>, and Inspection Mode <Ref. to EN(H4DOTC)(diag)-44, PROCEDURE, Inspection Mode.>.

WIRING DIAGRAM:

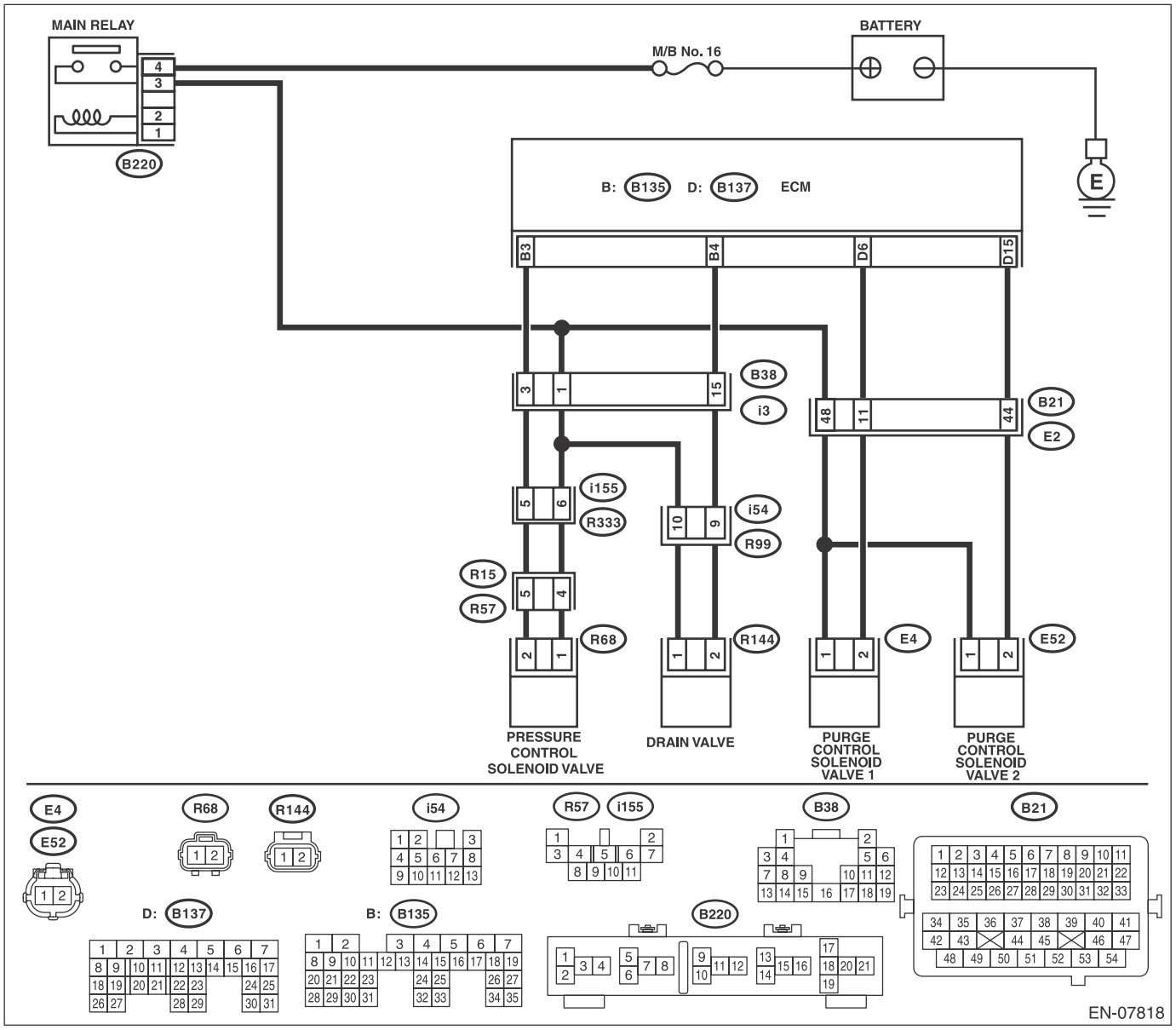

	Step	Check	Yes	No
1	**CHECK OUTPUT SIGNAL OF ECM.** 1) Turn the ignition switch to ON. 2) Measure the voltage between ECM and chassis ground. ***Connector & terminal*** ***(B135) No. 4 (+) — Chassis ground (–):***	Is the voltage 10 V or more?	Go to step **2**.	Go to step **3**.
2	**CHECK FOR POOR CONTACT.** Check for poor contact of ECM connector.	Is there poor contact of ECM connector?	Repair the poor contact of ECM connector.	Even if DTC is detected, the circuit has returned to a normal condition at this time. Reproduce the failure, and then perform the diagnosis again. NOTE: In this case, temporary open or short circuit of harness or temporary poor contact of connector may be the cause.
3	**CHECK POWER SUPPLY TO DRAIN VALVE.** Measure the voltage between drain valve connector and chassis ground. ***Connector & terminal*** ***(R144) No. 1 (+) — Chassis ground (–):***	Is the voltage 10 V or more?	Go to step **4**.	Repair the power supply circuit.
4	**CHECK HARNESS BETWEEN ECM AND DRAIN VALVE CONNECTOR.** 1) Turn the ignition switch to OFF. 2) Disconnect the connectors from the ECM and drain valve. 3) Measure the resistance between the drain valve connector and chassis ground. ***Connector & terminal*** ***(R144) No. 2 — Chassis ground:***	Is the resistance 1 MΩ or more?	Go to step **5**.	Repair the ground short circuit of harness between ECM and drain valve connector.
5	**CHECK HARNESS BETWEEN ECM AND DRAIN VALVE CONNECTOR.** Measure the resistance of harness between ECM and drain valve connector. ***Connector & terminal*** ***(B135) No. 4 — (R144) No. 2:***	Is the resistance less than 1 Ω?	Go to step **6**.	Repair the harness and connector. NOTE: In this case, repair the following item: • Open circuit of harness between ECM and drain valve connector • Poor contact of coupling connector
6	**CHECK DRAIN VALVE.** Measure the resistance between drain valve terminals. ***Terminals*** ***No. 1 — No. 2:***	Is the resistance 10 — 100 Ω?	Repair the poor contact of drain valve connector.	Replace the drain valve. <Ref. to EC(H4DOTC)-22, Drain Valve.>

BM:DTC P0448 EVAPORATIVE EMISSION CONTROL SYSTEM VENT CONTROL CIRCUIT SHORTED

DTC DETECTING CONDITION:

- Immediately at fault recognition
- GENERAL DESCRIPTION <Ref. to GD(H4DOTC)-130, DTC P0448 EVAPORATIVE EMISSION CONTROL SYSTEM VENT CONTROL CIRCUIT SHORTED, Diagnostic Trouble Code (DTC) Detecting Criteria.>

CAUTION:

After servicing or replacing faulty parts, perform Clear Memory Mode <Ref. to EN(H4DOTC)(diag)-55, OPERATION, Clear Memory Mode.>, and Inspection Mode <Ref. to EN(H4DOTC)(diag)-44, PROCEDURE, Inspection Mode.>.

WIRING DIAGRAM:

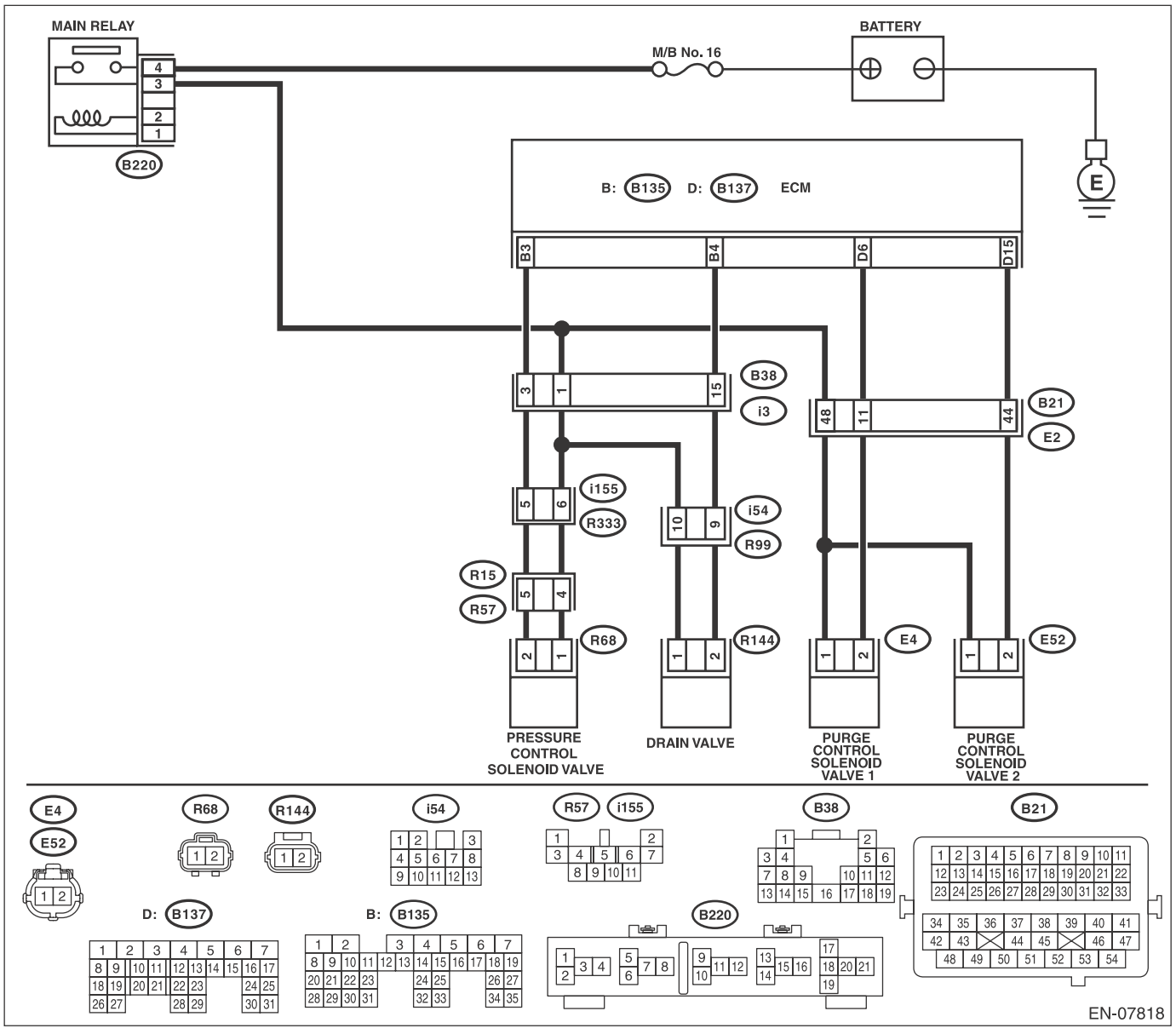

	Step	Check	Yes	No
1	**CHECK HARNESS BETWEEN ECM AND DRAIN VALVE CONNECTOR.** 1) Turn the ignition switch to OFF. 2) Disconnect the connectors from the ECM and drain valve. 3) Turn the ignition switch to ON. 4) Measure the voltage between ECM and chassis ground. ***Connector & terminal*** ***(B135) No. 4 (+) — Chassis ground (–):***	Is the voltage 10 V or more?	Repair the short circuit to power in the harness between ECM and drain valve connector.	Go to step **2**.
2	**CHECK DRAIN VALVE.** 1) Turn the ignition switch to OFF. 2) Measure the resistance between drain valve terminals. ***Terminals*** ***No. 1 — No. 2:***	Is the resistance less than 1 Ω?	Replace the drain valve. <Ref. to EC(H4DOTC)-22, Drain Valve.>	Repair the poor contact of ECM connector.

BN:DTC P0451 EVAPORATIVE EMISSION CONTROL SYSTEM PRESSURE SENSOR

DTC DETECTING CONDITION:

- Detected when two consecutive driving cycles with fault occur.
- GENERAL DESCRIPTION <Ref. to GD(H4DOTC)-132, DTC P0451 EVAPORATIVE EMISSION CONTROL SYSTEM PRESSURE SENSOR, Diagnostic Trouble Code (DTC) Detecting Criteria.>

CAUTION:

After servicing or replacing faulty parts, perform Clear Memory Mode <Ref. to EN(H4DOTC)(diag)-55, OPERATION, Clear Memory Mode.>, and Inspection Mode <Ref. to EN(H4DOTC)(diag)-44, PROCEDURE, Inspection Mode.>.

WIRING DIAGRAM:

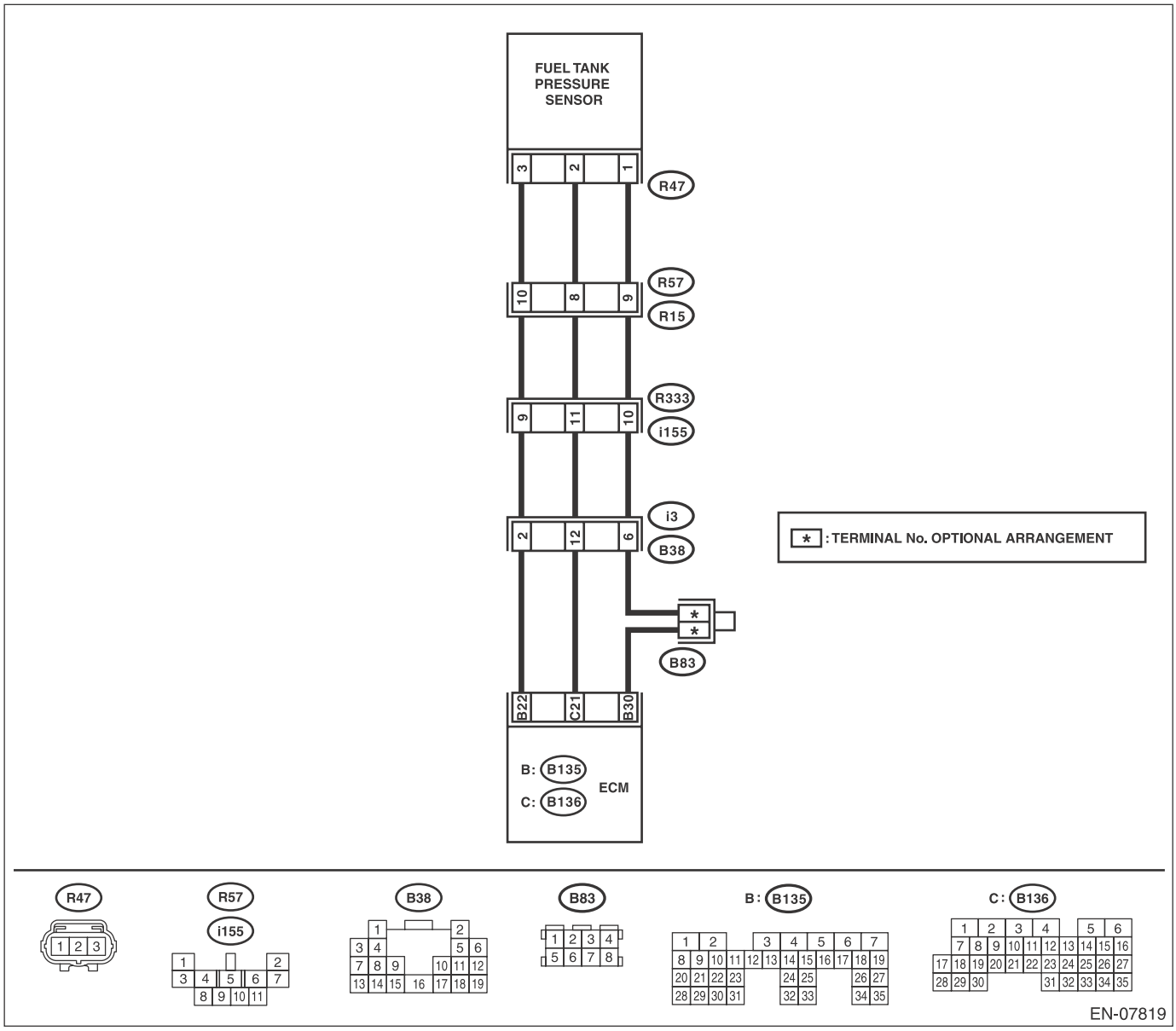

Step		Check	Yes	No
1	**CHECK FUEL FILLER CAP.** 1) Turn the ignition switch to OFF. 2) Open the fuel flap.	Is the fuel filler cap tightened securely?	Go to step **2**.	Tighten fuel filler cap securely.

Step		Check	Yes	No
2	**CHECK PRESSURE/VACUUM LINE.** NOTE: Check the following items. • Disconnection, leakage and clogging of the vacuum hoses and pipes between fuel tank pressure sensor and fuel tank • Disconnection, leakage and clogging of air ventilation hoses and pipes between fuel filler pipe and fuel tank	Is there any fault in pressure/vacuum line?	Repair or replace the hoses and pipes.	Replace the fuel tank pressure sensor. <Ref. to EC(H4DOTC)-17, Fuel Tank Pressure Sensor.>

BO:DTC P0452 EVAPORATIVE EMISSION CONTROL SYSTEM PRESSURE SENSOR LOW INPUT

DTC DETECTING CONDITION:

- Immediately at fault recognition
- GENERAL DESCRIPTION <Ref. to GD(H4DOTC)-134, DTC P0452 EVAPORATIVE EMISSION CONTROL SYSTEM PRESSURE SENSOR LOW INPUT, Diagnostic Trouble Code (DTC) Detecting Criteria.>

CAUTION:

After servicing or replacing faulty parts, perform Clear Memory Mode <Ref. to EN(H4DOTC)(diag)-55, OPERATION, Clear Memory Mode.>, and Inspection Mode <Ref. to EN(H4DOTC)(diag)-44, PROCEDURE, Inspection Mode.>.

WIRING DIAGRAM:

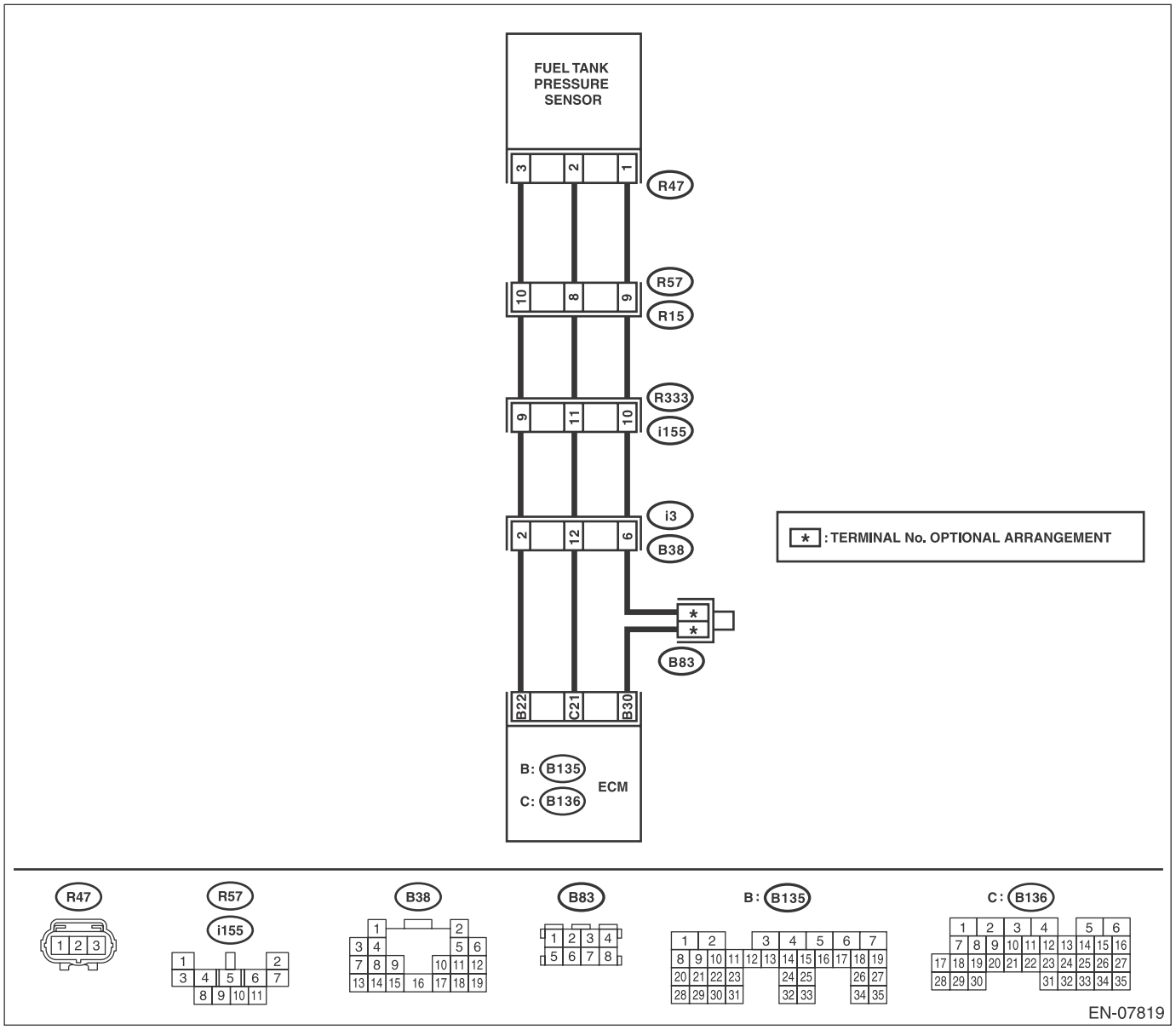

	Step	Check	Yes	No
1	**CHECK CURRENT DATA.** 1) Turn the ignition switch to ON. 2) Read the data of fuel tank pressure sensor signal using the Subaru Select Monitor or general scan tool. NOTE: • Subaru Select Monitor For detailed operation procedures, refer to "READ CURRENT DATA FOR ENGINE". <Ref. to EN(H4DOTC)(diag)-37, Subaru Select Monitor.> • General scan tool For detailed operation procedures, refer to the general scan tool operation manual.	Is the measured value less than –7.45 kPa (–55.89 mmHg, –2.2003 inHg)?	Go to step **2**.	Even if DTC is detected, the circuit has returned to a normal condition at this time. Reproduce the failure, and then perform the diagnosis again. NOTE: In this case, temporary poor contact of connector, temporary open or short circuit of harness may be the cause.
2	**CHECK FUEL TANK PRESSURE SENSOR POWER SUPPLY.** 1) Turn the ignition switch to OFF. 2) Disconnect the connector from the fuel tank pressure sensor. 3) Turn the ignition switch to ON. 4) Measure the voltage between the fuel tank pressure sensor connector and chassis ground. ***Connector & terminal*** ***(R47) No. 3 (+) — Chassis ground (–):***	Is the voltage 4.5 V or more?	Go to step **3**.	Repair the harness and connector. NOTE: In this case, repair the following item: • Open circuit of harness between ECM and fuel tank pressure sensor connector • Poor contact of ECM connector • Poor contact of coupling connector
3	**CHECK HARNESS BETWEEN ECM AND FUEL TANK PRESSURE SENSOR CONNECTOR.** 1) Turn the ignition switch to OFF. 2) Disconnect the connector from ECM. 3) Measure the resistance of harness between the ECM and fuel tank pressure sensor connector. ***Connector & terminal*** ***(B136) No. 21 — (R47) No. 2:***	Is the resistance less than 1 Ω?	Go to step **4**.	Repair the harness and connector. NOTE: In this case, repair the following item: • Open circuit of harness between ECM and fuel tank pressure sensor connector • Poor contact of coupling connector
4	**CHECK HARNESS BETWEEN ECM AND FUEL TANK PRESSURE SENSOR CONNECTOR.** Measure the resistance between ECM and chassis ground. ***Connector & terminal*** ***(B136) No. 21 — Chassis ground:***	Is the resistance 1 MΩ or more?	Go to step **5**.	Repair the ground short circuit of harness between ECM and fuel tank pressure sensor connector.
5	**CHECK FOR POOR CONTACT.** Check for poor contact between the ECM and fuel tank pressure sensor connector.	Is there poor contact of the ECM or fuel tank pressure sensor connector?	Repair the poor contact of the ECM or fuel tank pressure sensor connector.	Replace the fuel tank pressure sensor. <Ref. to EC(H4DOTC)-17, Fuel Tank Pressure Sensor.>

BP:DTC P0453 EVAPORATIVE EMISSION CONTROL SYSTEM PRESSURE SENSOR HIGH INPUT

DTC DETECTING CONDITION:

- Immediately at fault recognition
- GENERAL DESCRIPTION <Ref. to GD(H4DOTC)-136, DTC P0453 EVAPORATIVE EMISSION CONTROL SYSTEM PRESSURE SENSOR HIGH INPUT, Diagnostic Trouble Code (DTC) Detecting Criteria.>

CAUTION:

After servicing or replacing faulty parts, perform Clear Memory Mode <Ref. to EN(H4DOTC)(diag)-55, OPERATION, Clear Memory Mode.>, and Inspection Mode <Ref. to EN(H4DOTC)(diag)-44, PROCEDURE, Inspection Mode.>.

WIRING DIAGRAM:

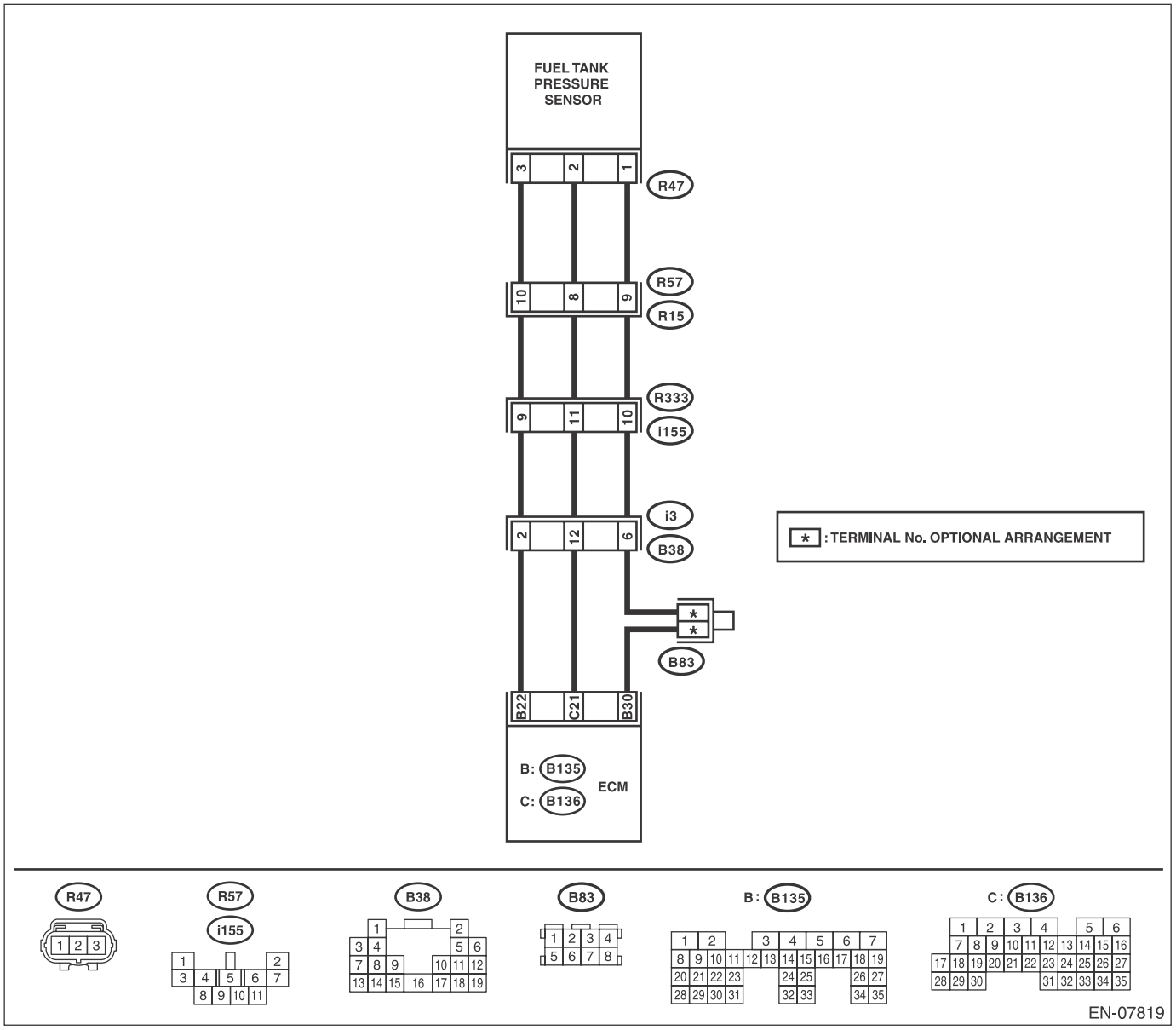

	Step	Check	Yes	No
1	**CHECK CURRENT DATA.** 1) Turn the ignition switch to ON. 2) Read the data of fuel tank pressure sensor signal using the Subaru Select Monitor or general scan tool. NOTE: • Subaru Select Monitor For detailed operation procedures, refer to "READ CURRENT DATA FOR ENGINE". <Ref. to EN(H4DOTC)(diag)-37, Subaru Select Monitor.> • General scan tool For detailed operation procedures, refer to the general scan tool operation manual.	Is the measured value 7.98 kPa (59.86 mmHg, 2.357 inHg) or more?	Go to step **2**.	Even if DTC is detected, the circuit has returned to a normal condition at this time. Reproduce the failure, and then perform the diagnosis again. NOTE: In this case, temporary poor contact of connector, temporary open or short circuit of harness may be the cause.
2	**CHECK HARNESS BETWEEN ECM AND FUEL TANK PRESSURE SENSOR CONNECTOR.** 1) Turn the ignition switch to OFF. 2) Disconnect the connector from the fuel tank pressure sensor. 3) Turn the ignition switch to ON. 4) Read the data of fuel tank pressure sensor signal using the Subaru Select Monitor or general scan tool. NOTE: • Subaru Select Monitor For detailed operation procedures, refer to "READ CURRENT DATA FOR ENGINE". <Ref. to EN(H4DOTC)(diag)-37, Subaru Select Monitor.> • General scan tool For detailed operation procedures, refer to the general scan tool operation manual.	Is the measured value 7.98 kPa (59.86 mmHg, 2.357 inHg) or more?	Repair the short circuit to power in the harness between ECM and fuel tank pressure sensor connector.	Go to step **3**.
3	**CHECK HARNESS BETWEEN ECM AND FUEL TANK PRESSURE SENSOR CONNECTOR.** 1) Turn the ignition switch to OFF. 2) Measure the resistance of harness between fuel tank pressure sensor connector and engine ground. ***Connector & terminal*** ***(R47) No. 1 — Engine ground:***	Is the resistance less than 5 Ω?	Go to step **4**.	Repair the harness and connector. NOTE: In this case, repair the following item: • Open circuit of harness between ECM and fuel tank pressure sensor connector • Poor contact of ECM connector • Poor contact of coupling connector
4	**CHECK FOR POOR CONTACT.** Check for poor contact of the fuel tank pressure sensor connector.	Is there poor contact of fuel tank pressure sensor connector?	Repair the poor contact of fuel tank pressure sensor connector.	Replace the fuel tank pressure sensor. <Ref. to EC(H4DOTC)-17, Fuel Tank Pressure Sensor.>

BQ:DTC P0456 EVAPORATIVE EMISSION CONTROL SYSTEM LEAK DETECTED (VERY SMALL LEAK)

DTC DETECTING CONDITION:

- Detected when two consecutive driving cycles with fault occur.
- GENERAL DESCRIPTION <Ref. to GD(H4DOTC)-137, DTC P0456 EVAPORATIVE EMISSION CONTROL SYSTEM LEAK DETECTED (VERY SMALL LEAK), Diagnostic Trouble Code (DTC) Detecting Criteria.>

TROUBLE SYMPTOM:

- Fuel odor
- There is a hole of more than 0.5 mm (0.020 in) dia. in evaporation system or fuel tank.

CAUTION:

After servicing or replacing faulty parts, perform Clear Memory Mode <Ref. to EN(H4DOTC)(diag)-55, OPERATION, Clear Memory Mode.>, and Inspection Mode <Ref. to EN(H4DOTC)(diag)-44, PROCEDURE, Inspection Mode.>.

WIRING DIAGRAM:

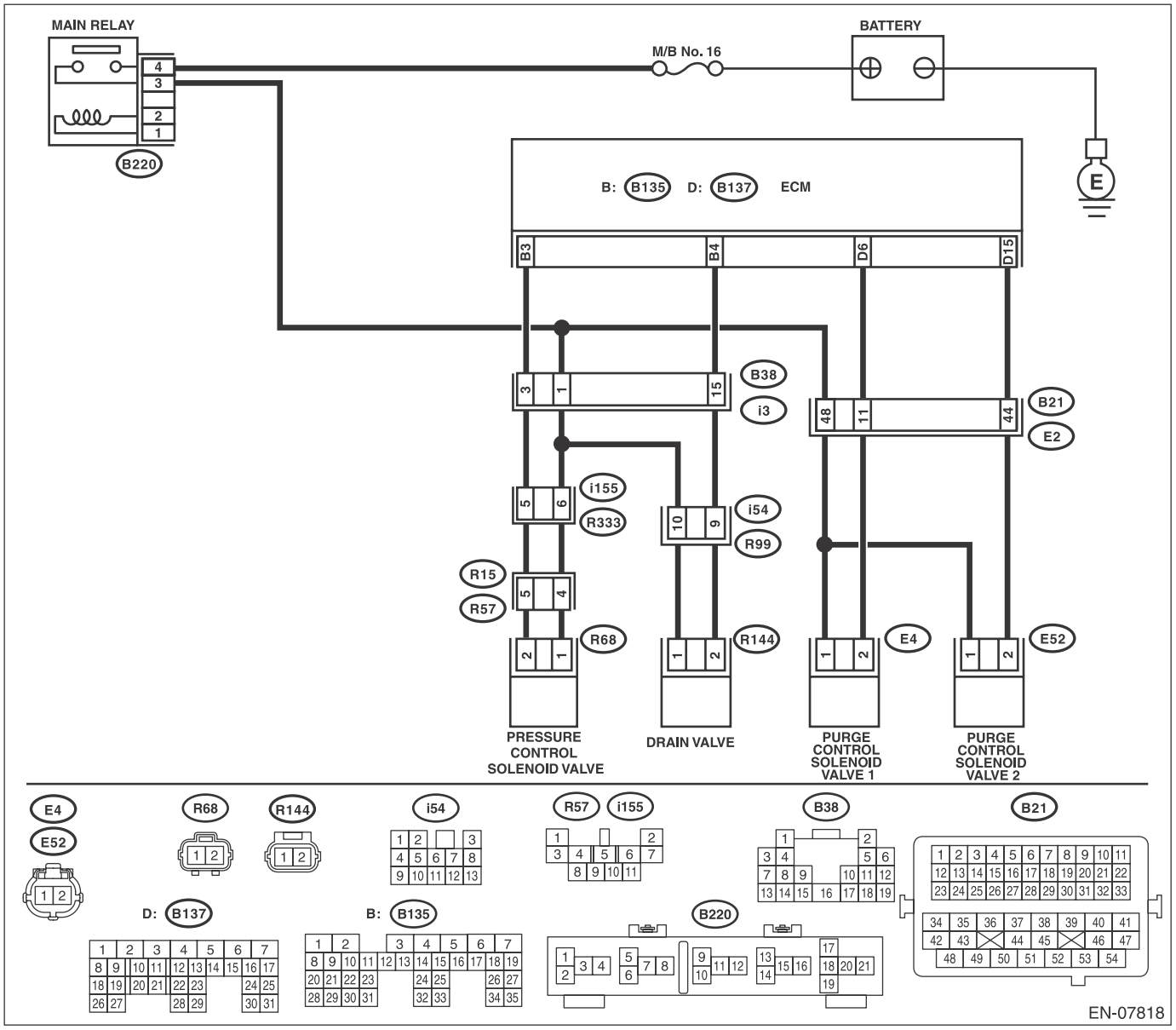

	Step	Check	Yes	No
1	**CHECK FUEL FILLER CAP.** 1) Turn the ignition switch to OFF. 2) Check the fuel filler cap. NOTE: The DTC is stored in memory if fuel filler cap is or was loose or if the cap chain has caught while tightening.	Is the fuel filler cap tightened securely?	Go to step **2**.	Tighten fuel filler cap securely.
2	**CHECK FUEL FILLER CAP.**	Is the fuel filler cap genuine?	Go to step **3**.	Replace with a genuine fuel filler cap.
3	**CHECK FUEL FILLER PIPE GASKET.**	Is there any damage to the seal between fuel filler cap and fuel filler pipe?	Repair or replace the fuel filler cap and fuel filler pipe. <Ref. to FU(H4DOTC)-74, Fuel Filler Pipe.>	Go to step **4**.
4	**CHECK DRAIN VALVE OPERATION.** 1) Install the delivery (test) mode fuse. 2) Turn the ignition switch to ON. 3) Perform operation check for the drain valve using the Subaru Select Monitor. NOTE: Drain valve can be operated using the Subaru Select Monitor. For detailed procedures, refer to "SYSTEM OPERATION CHECK MODE". <Ref. to EN(H4DOTC)(diag)-56, System Operation Check Mode.>	Does the drain valve operate?	Go to step **5**.	Replace the drain valve. <Ref. to EC(H4DOTC)-22, Drain Valve.>
5	**CHECK OPERATION OF PURGE CONTROL SOLENOID VALVE.** Perform operation check for the purge control solenoid valve using the Subaru Select Monitor. NOTE: Purge control solenoid valve operation can be executed using Subaru Select Monitor. For detailed procedures, refer to "SYSTEM OPERATION CHECK MODE". <Ref. to EN(H4DOTC)(diag)-56, System Operation Check Mode.>	Does the purge control solenoid valve operate?	Go to step **6**.	Replace the purge control solenoid valve. <Ref. to EC(H4DOTC)-9, Purge Control Solenoid Valve.>
6	**CHECK OPERATION OF PRESSURE CONTROL SOLENOID VALVE.** Perform operation check for the pressure control solenoid valve using the Subaru Select Monitor. NOTE: The pressure control solenoid valve operation can be executed using the Subaru Select Monitor. For detailed procedures, refer to "SYSTEM OPERATION CHECK MODE". <Ref. to EN(H4DOTC)(diag)-56, System Operation Check Mode.>	Does the pressure control solenoid valve operate?	Go to step **7**.	Replace the pressure control solenoid valve. <Ref. to EC(H4DOTC)-19, Pressure Control Solenoid Valve.>
7	**CHECK EVAPORATIVE EMISSION CONTROL SYSTEM LINE.** 1) Turn the ignition switch to OFF. 2) Remove the delivery (test) mode fuse.	Is there any hole of more than 0.5 mm (0.020 in) dia. on evaporation line?	Repair or replace the evaporation line. <Ref. to FU(H4DOTC)-87, Fuel Delivery, Return and Evaporation Lines.>	Go to step **8**.

Step		Check	Yes	No
8	**CHECK CANISTER.**	Is the canister damaged or is there a hole of more than 0.5 mm (0.020 in) dia. in it?	Repair or replace the canister. <Ref. to EC(H4DOTC)-5, Canister.>	Go to step **9**.
9	**CHECK FUEL TANK.** Remove the fuel tank. <Ref. to FU(H4DOTC)-67, Fuel Tank.>	Is the fuel tank damaged or is there any hole of more than 0.5 mm (0.020 in) dia. in it?	Repair or replace the fuel tank. <Ref. to FU(H4DOTC)-67, Fuel Tank.>	Go to step **10**.
10	**CHECK ANY OTHER MECHANICAL TROUBLE IN EVAPORATIVE EMISSION CONTROL SYSTEM.**	Is there any hole of more than 0.5 mm (0.020 in) dia., crack, clogging, or disconnections, bend, misconnection of hoses or pipes in evaporative emission control system?	Repair or replace the hoses or pipes.	Repair the poor contact of ECM connector.

BR:DTC P0457 EVAPORATIVE EMISSION CONTROL SYSTEM LEAK DETECTED (FUEL CAP LOOSE/OFF)

DTC DETECTING CONDITION:

- Detected when two consecutive driving cycles with fault occur.
- GENERAL DESCRIPTION <Ref. to GD(H4DOTC)-137, DTC P0457 EVAPORATIVE EMISSION CONTROL SYSTEM LEAK DETECTED (FUEL CAP LOOSE/OFF), Diagnostic Trouble Code (DTC) Detecting Criteria.>

TROUBLE SYMPTOM:

- Fuel odor
- Fuel filler cap loose or lost

CAUTION:

After servicing or replacing faulty parts, perform Clear Memory Mode <Ref. to EN(H4DOTC)(diag)-55, OPERATION, Clear Memory Mode.>, and Inspection Mode <Ref. to EN(H4DOTC)(diag)-44, PROCEDURE, Inspection Mode.>.

WIRING DIAGRAM:

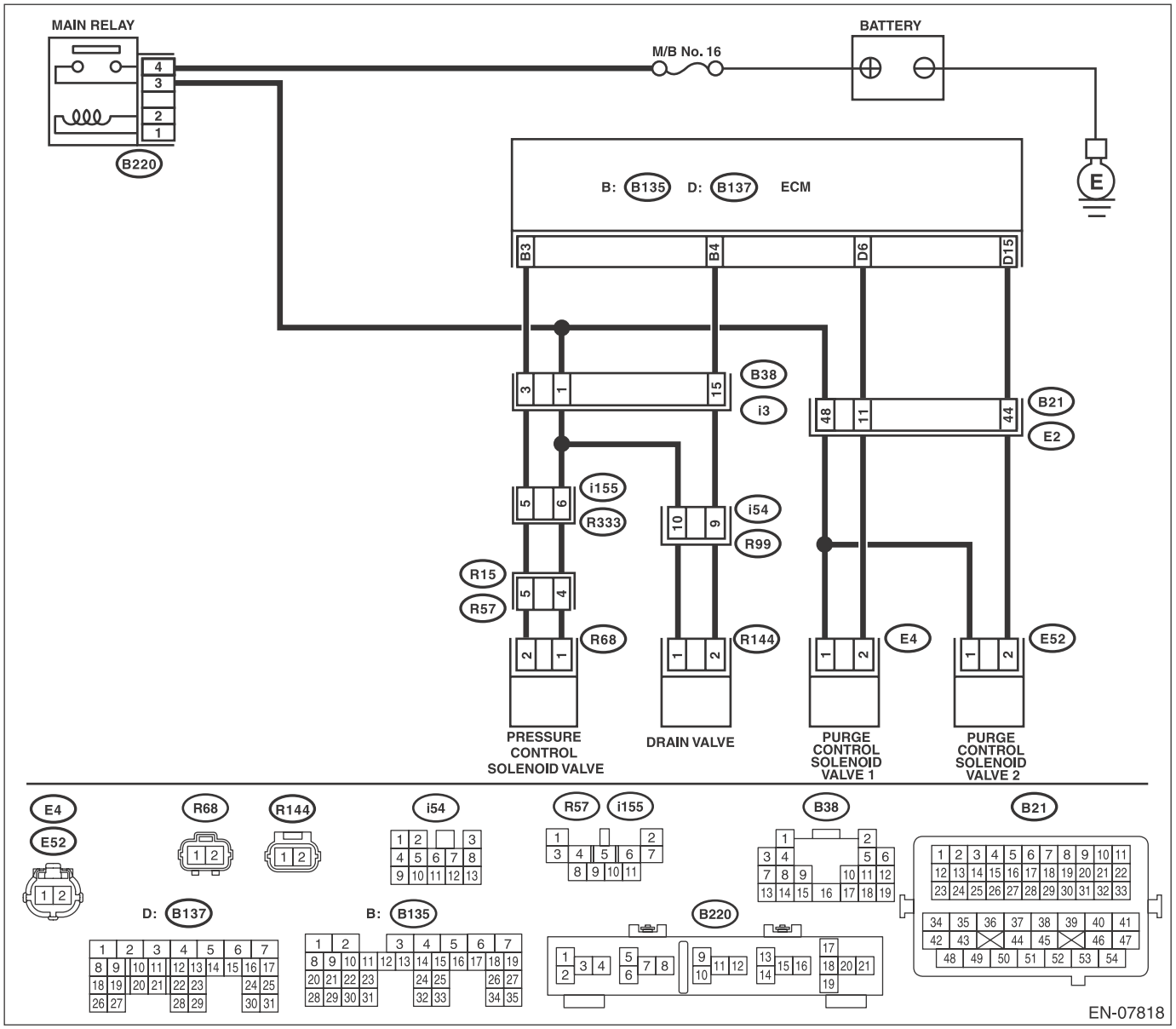

	Step	Check	Yes	No
1	**CHECK FUEL FILLER CAP.** 1) Turn the ignition switch to OFF. 2) Check the fuel filler cap. NOTE: The DTC is stored in memory if fuel filler cap is or was loose or if the cap chain has caught while tightening.	Is the fuel filler cap tightened securely?	Go to step **2**.	Tighten fuel filler cap securely.
2	**CHECK FUEL FILLER CAP.**	Is the fuel filler cap genuine?	Go to step **3**.	Replace with a genuine fuel filler cap.
3	**CHECK FUEL FILLER PIPE GASKET.**	Is there any damage to the seal between fuel filler cap and fuel filler pipe?	Repair or replace the fuel filler cap and fuel filler pipe. <Ref. to FU(H4DOTC)-74, Fuel Filler Pipe.>	Go to step **4**.
4	**CHECK DRAIN VALVE OPERATION.** 1) Install the delivery (test) mode fuse. 2) Turn the ignition switch to ON. 3) Perform operation check for the drain valve using the Subaru Select Monitor. NOTE: Drain valve can be operated using the Subaru Select Monitor. For detailed procedures, refer to "SYSTEM OPERATION CHECK MODE". <Ref. to EN(H4DOTC)(diag)-56, System Operation Check Mode.>	Does the drain valve operate?	Go to step **5**.	Replace the drain valve. <Ref. to EC(H4DOTC)-22, Drain Valve.>
5	**CHECK OPERATION OF PURGE CONTROL SOLENOID VALVE.** Perform operation check for the purge control solenoid valve using the Subaru Select Monitor. NOTE: Purge control solenoid valve operation can be executed using Subaru Select Monitor. For detailed procedures, refer to "SYSTEM OPERATION CHECK MODE". <Ref. to EN(H4DOTC)(diag)-56, System Operation Check Mode.>	Does the purge control solenoid valve operate?	Go to step **6**.	Replace the purge control solenoid valve. <Ref. to EC(H4DOTC)-9, Purge Control Solenoid Valve.>
6	**CHECK OPERATION OF PRESSURE CONTROL SOLENOID VALVE.** Perform operation check for the pressure control solenoid valve using the Subaru Select Monitor. NOTE: The pressure control solenoid valve operation can be executed using the Subaru Select Monitor. For detailed procedures, refer to "SYSTEM OPERATION CHECK MODE". <Ref. to EN(H4DOTC)(diag)-56, System Operation Check Mode.>	Does the pressure control solenoid valve operate?	Go to step **7**.	Replace the pressure control solenoid valve. <Ref. to EC(H4DOTC)-19, Pressure Control Solenoid Valve.>
7	**CHECK EVAPORATIVE EMISSION CONTROL SYSTEM LINE.** 1) Turn the ignition switch to OFF. 2) Remove the delivery (test) mode fuse.	Is there any disconnection, damage or clogging on the evaporation line?	Repair or replace the evaporation line. <Ref. to FU(H4DOTC)-87, Fuel Delivery, Return and Evaporation Lines.>	Go to step **8**.

	Step	Check	Yes	No
8	**CHECK CANISTER.**	Is the canister damaged?	Repair or replace the canister. <Ref. to EC(H4DOTC)-5, Canister.>	Go to step **9**.
9	**CHECK FUEL TANK.** Remove the fuel tank. <Ref. to FU(H4DOTC)-67, Fuel Tank.>	Is the fuel tank damaged?	Repair or replace the fuel tank. <Ref. to FU(H4DOTC)-67, Fuel Tank.>	Go to step **10**.
10	**CHECK ANY OTHER MECHANICAL TROUBLE IN EVAPORATIVE EMISSION CONTROL SYSTEM.**	Are there holes, cracks, clogging, or disconnections, misconnection of hoses or pipes in evaporative emission control system?	Repair or replace the hoses or pipes.	Repair the poor contact of ECM connector.

BS:DTC P0458 EVAPORATIVE EMISSION SYSTEM PURGE CONTROL VALVE CIRCUIT LOW

DTC DETECTING CONDITION:

- Detected when two consecutive driving cycles with fault occur.
- GENERAL DESCRIPTION <Ref. to GD(H4DOTC)-138, DTC P0458 EVAPORATIVE EMISSION SYSTEM PURGE CONTROL VALVE CIRCUIT LOW, Diagnostic Trouble Code (DTC) Detecting Criteria.>

TROUBLE SYMPTOM:

Improper idling

CAUTION:

After servicing or replacing faulty parts, perform Clear Memory Mode <Ref. to EN(H4DOTC)(diag)-55, OPERATION, Clear Memory Mode.>, and Inspection Mode <Ref. to EN(H4DOTC)(diag)-44, PROCEDURE, Inspection Mode.>.

WIRING DIAGRAM:

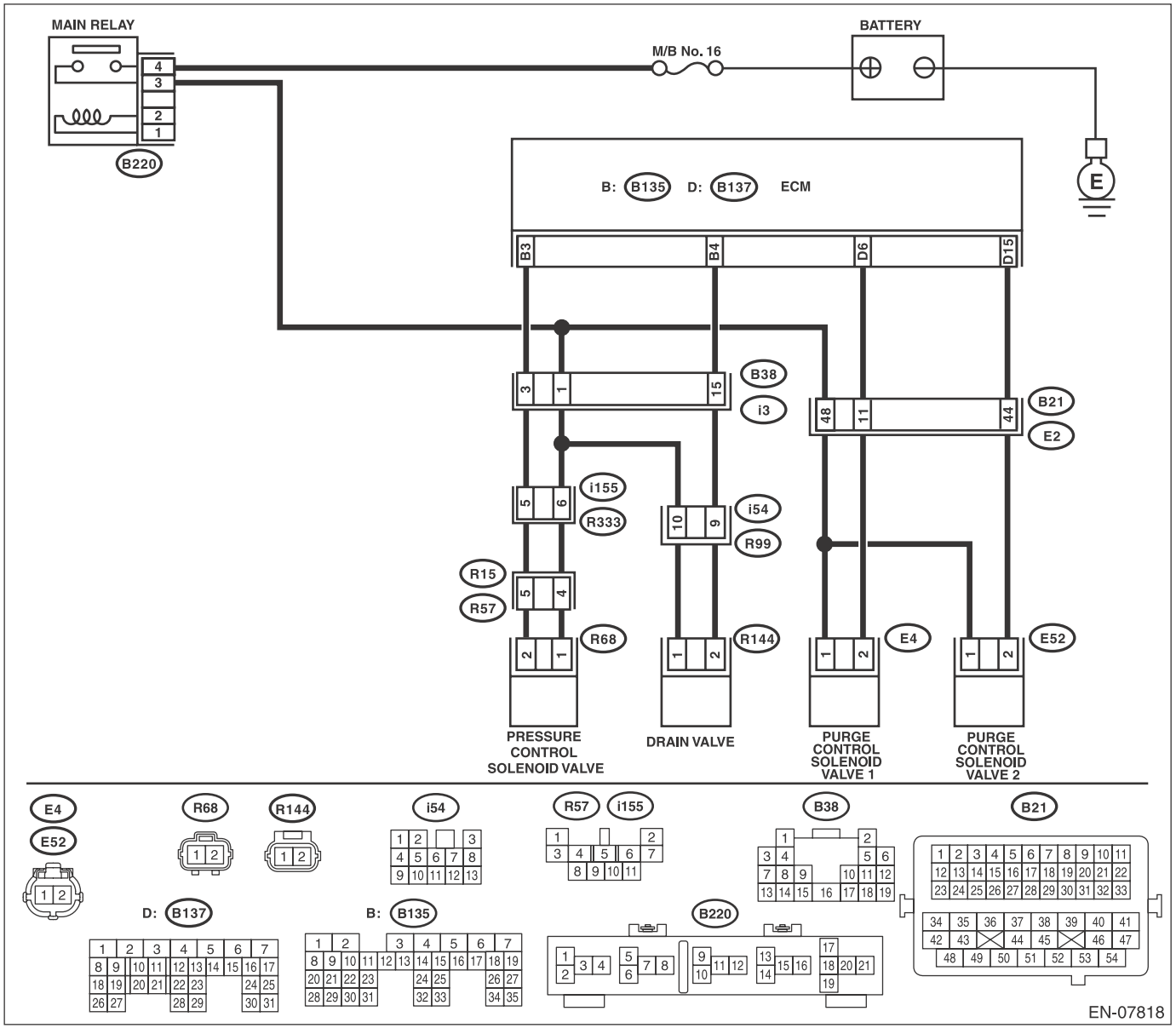

	Step	Check	Yes	No
1	**CHECK OUTPUT SIGNAL OF ECM.** 1) Turn the ignition switch to ON. 2) Measure the voltage between ECM and chassis ground. ***Connector & terminal*** ***(B137) No. 6 (+) — Chassis ground (–):***	Is the voltage 10 V or more?	Go to step **2**.	Go to step **3**.
2	**CHECK FOR POOR CONTACT.** Check for poor contact of ECM connector.	Is there poor contact of ECM connector?	Repair the poor contact of ECM connector.	Even if DTC is detected, the circuit has returned to a normal condition at this time. Reproduce the failure, and then perform the diagnosis again. NOTE: In this case, temporary open or short circuit of harness or temporary poor contact of connector may be the cause.
3	**CHECK POWER SUPPLY TO PURGE CONTROL SOLENOID VALVE CONNECTOR.** Measure the voltage between purge control solenoid valve connector and engine ground. ***Connector & terminal*** ***(E4) No. 1 (+) — Engine ground (–):***	Is the voltage 10 V or more?	Go to step **4**.	Repair the power supply circuit.
4	**CHECK HARNESS BETWEEN ECM AND PURGE CONTROL SOLENOID VALVE CONNECTOR.** 1) Turn the ignition switch to OFF. 2) Disconnect the connectors from ECM and purge control solenoid valve. 3) Measure the resistance between the purge control solenoid valve connector and engine ground. ***Connector & terminal*** ***(E4) No. 2 — Engine ground:***	Is the resistance 1 MΩ or more?	Go to step **5**.	Repair the ground short circuit of harness between ECM and purge control solenoid valve connector.
5	**CHECK HARNESS BETWEEN ECM AND PURGE CONTROL SOLENOID VALVE CONNECTOR.** Measure the resistance of harness between ECM and purge control solenoid valve connector. ***Connector & terminal*** ***(B137) No. 6 — (E4) No. 2:***	Is the resistance less than 1 Ω?	Go to step **6**.	Repair the harness and connector. NOTE: In this case, repair the following item: • Open circuit in harness between ECM and purge control solenoid valve connector • Poor contact of coupling connector
6	**CHECK PURGE CONTROL SOLENOID VALVE.** 1) Remove the purge control solenoid valve. 2) Measure the resistance between purge control solenoid valve terminals. ***Terminals*** ***No. 1 — No. 2:***	Is the resistance 10 — 100 Ω?	Repair the poor contact of purge control solenoid valve connector.	Replace the purge control solenoid valve. <Ref. to EC(H4DOTC)-9, Purge Control Solenoid Valve.>

BT:DTC P0459 EVAPORATIVE EMISSION SYSTEM PURGE CONTROL VALVE CIRCUIT HIGH

DTC DETECTING CONDITION:

- Detected when two consecutive driving cycles with fault occur.
- GENERAL DESCRIPTION <Ref. to GD(H4DOTC)-140, DTC P0459 EVAPORATIVE EMISSION SYSTEM PURGE CONTROL VALVE CIRCUIT HIGH, Diagnostic Trouble Code (DTC) Detecting Criteria.>

TROUBLE SYMPTOM:

Improper idling

CAUTION:

After servicing or replacing faulty parts, perform Clear Memory Mode <Ref. to EN(H4DOTC)(diag)-55, OPERATION, Clear Memory Mode.>, and Inspection Mode <Ref. to EN(H4DOTC)(diag)-44, PROCEDURE, Inspection Mode.>.

WIRING DIAGRAM:

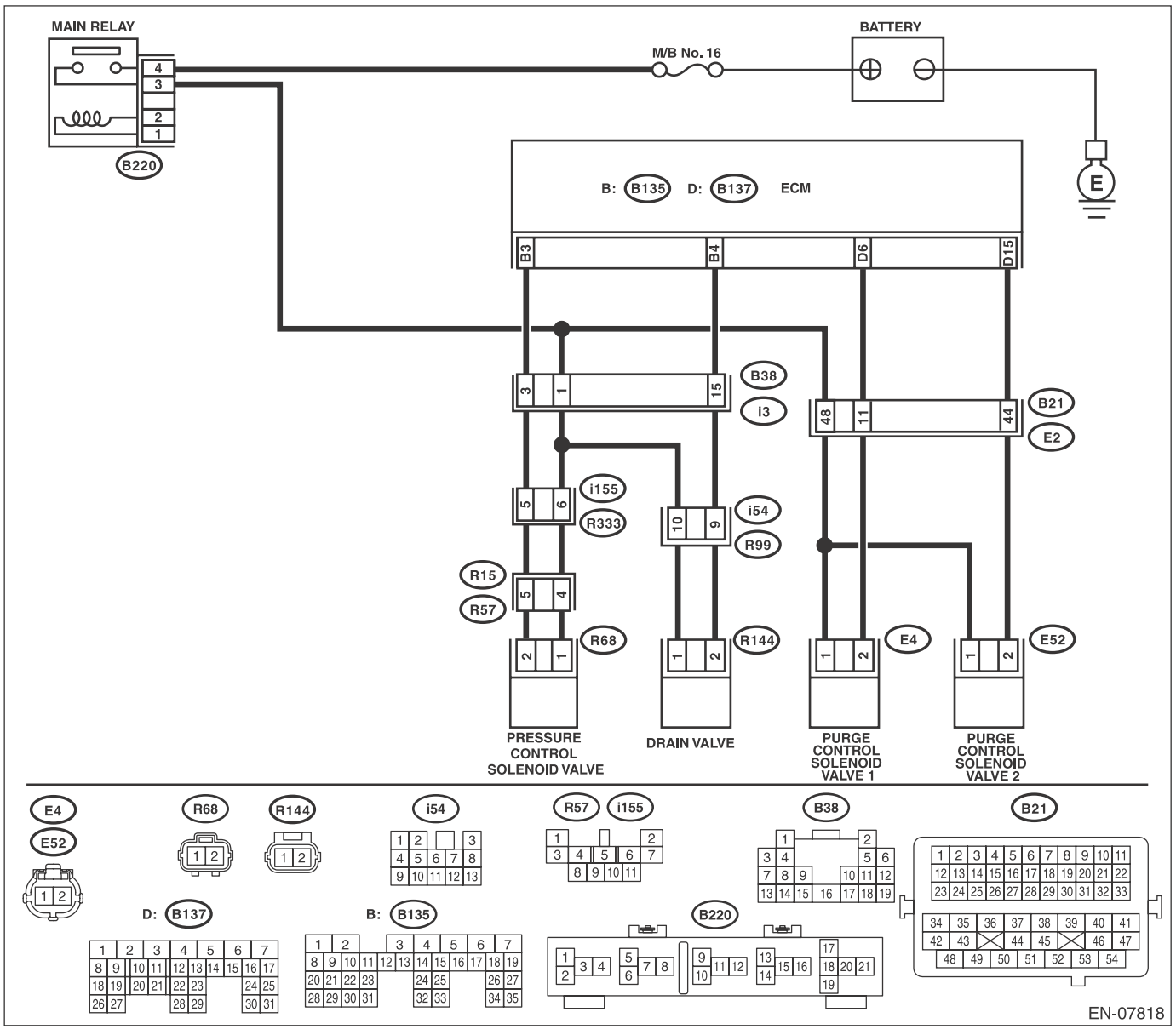

	Step	Check	Yes	No
1	**CHECK HARNESS BETWEEN ECM AND PURGE CONTROL SOLENOID VALVE CONNECTOR.** 1) Turn the ignition switch to OFF. 2) Disconnect the connectors from ECM and purge control solenoid valve. 3) Turn the ignition switch to ON. 4) Measure the voltage between ECM and chassis ground. ***Connector & terminal*** ***(B137) No. 6 (+) — Chassis ground (−):***	Is the voltage 10 V or more?	Repair the short circuit of harness to power supply between ECM and purge control solenoid valve connector.	Go to step **2**.
2	**CHECK PURGE CONTROL SOLENOID VALVE.** 1) Turn the ignition switch to OFF. 2) Measure the resistance between purge control solenoid valve terminals. ***Terminals*** ***No. 1 — No. 2:***	Is the resistance less than 1 Ω?	Replace the purge control solenoid valve. <Ref. to EC(H4DOTC)-9, Purge Control Solenoid Valve.>	Repair the poor contact of ECM connector.

BU:DTC P0461 FUEL LEVEL SENSOR “A” CIRCUIT RANGE/PERFORMANCE

DTC DETECTING CONDITION:

- Detected when two consecutive driving cycles with fault occur.
- GENERAL DESCRIPTION <Ref. to GD(H4DOTC)-142, DTC P0461 FUEL LEVEL SENSOR “A” CIRCUIT RANGE/PERFORMANCE, Diagnostic Trouble Code (DTC) Detecting Criteria.>

CAUTION:
After servicing or replacing faulty parts, perform Clear Memory Mode <Ref. to EN(H4DOTC)(diag)-55, OPERATION, Clear Memory Mode.>, and Inspection Mode <Ref. to EN(H4DOTC)(diag)-44, PROCEDURE, Inspection Mode.>.

Step		Check	Yes	No
1	**CHECK FOR ANY OTHER DTC ON DISPLAY.**	Is any other DTC displayed?	Check the appropriate DTC using the “List of Diagnostic Trouble Code (DTC)”. <Ref. to EN(H4DOTC)(diag)-78, List of Diagnostic Trouble Code (DTC).>	Replace the fuel level sensor and fuel sub level sensor. <Ref. to FU(H4DOTC)-80, Fuel Level Sensor.> <Ref. to FU(H4DOTC)-82, Fuel Sub Level Sensor.>

BV:DTC P0462 FUEL LEVEL SENSOR “A” CIRCUIT LOW

NOTE:
For the diagnostic procedure, refer to DTC P0463. <Ref. to EN(H4DOTC)(diag)-222, DTC P0463 FUEL LEVEL SENSOR “A” CIRCUIT HIGH, Diagnostic Procedure with Diagnostic Trouble Code (DTC).>

BW:DTC P0463 FUEL LEVEL SENSOR “A” CIRCUIT HIGH

DTC DETECTING CONDITION:

- Detected when two consecutive driving cycles with fault occur.
- GENERAL DESCRIPTION <Ref. to GD(H4DOTC)-146, DTC P0463 FUEL LEVEL SENSOR “A” CIRCUIT HIGH, Diagnostic Trouble Code (DTC) Detecting Criteria.>

CAUTION:
After servicing or replacing faulty parts, perform Clear Memory Mode <Ref. to EN(H4DOTC)(diag)-55, OPERATION, Clear Memory Mode.>, and Inspection Mode <Ref. to EN(H4DOTC)(diag)-44, PROCEDURE, Inspection Mode.>.

Step		Check	Yes	No
1	**CHECK FOR ANY OTHER DTC ON DISPLAY.**	Is DTC P0462 or P0463 displayed on the Subaru Select Monitor?	Check the combination meter. <Ref. to IDI-12, CHECK FUEL LEVEL SENSOR, INSPECTION, Combination Meter System.>	Even if DTC is detected, the circuit has returned to a normal condition at this time. Reproduce the failure, and then perform the diagnosis again. NOTE: In this case, temporary poor contact of connector, temporary open or short circuit of harness may be the cause.

BX:DTC P0464 FUEL LEVEL SENSOR CIRCUIT INTERMITTENT

DTC DETECTING CONDITION:

- Detected when two consecutive driving cycles with fault occur.
- GENERAL DESCRIPTION <Ref. to GD(H4DOTC)-148, DTC P0464 FUEL LEVEL SENSOR CIRCUIT INTERMITTENT, Diagnostic Trouble Code (DTC) Detecting Criteria.>

CAUTION:
After servicing or replacing faulty parts, perform Clear Memory Mode <Ref. to EN(H4DOTC)(diag)-55, OPERATION, Clear Memory Mode.>, and Inspection Mode <Ref. to EN(H4DOTC)(diag)-44, PROCEDURE, Inspection Mode.>.

Step		Check	Yes	No
1	**CHECK FOR ANY OTHER DTC ON DISPLAY.**	Is DTC P0464 displayed on the display?	Check the combination meter. <Ref. to IDI-12, CHECK FUEL LEVEL SENSOR, INSPECTION, Combination Meter System.>	Even if DTC is detected, the circuit has returned to a normal condition at this time. Reproduce the failure, and then perform the diagnosis again. NOTE: In this case, temporary poor contact of connector, temporary open or short circuit of harness may be the cause.

BY:DTC P0500 VEHICLE SPEED SENSOR “A”

DTC DETECTING CONDITION:

- Immediately at fault recognition
- GENERAL DESCRIPTION <Ref. to GD(H4DOTC)-151, DTC P0500 VEHICLE SPEED SENSOR “A”, Diagnostic Trouble Code (DTC) Detecting Criteria.>

CAUTION:
After servicing or replacing faulty parts, perform Clear Memory Mode <Ref. to EN(H4DOTC)(diag)-55, OPERATION, Clear Memory Mode.>, and Inspection Mode <Ref. to EN(H4DOTC)(diag)-44, PROCEDURE, Inspection Mode.>.

Step		Check	Yes	No
1	**CHECK DTC OF VDC.** Check DTC of VDC.	Is DTC of VDC displayed?	Perform the diagnosis according to DTC. <Ref. to VDC(diag)-35, List of Diagnostic Trouble Code (DTC).>	Repair the poor contact of ECM connector.

BZ:DTC P0506 IDLE AIR CONTROL SYSTEM RPM LOWER THAN EXPECTED

DTC DETECTING CONDITION:

- Detected when two consecutive driving cycles with fault occur.
- GENERAL DESCRIPTION <Ref. to GD(H4DOTC)-152, DTC P0506 IDLE AIR CONTROL SYSTEM RPM LOWER THAN EXPECTED, Diagnostic Trouble Code (DTC) Detecting Criteria.>

TROUBLE SYMPTOM:

- Hard to start the engine.
- Engine does not start.
- Improper idling
- Engine stalls.

CAUTION:

After servicing or replacing faulty parts, perform Clear Memory Mode <Ref. to EN(H4DOTC)(diag)-55, OPERATION, Clear Memory Mode.>, and Inspection Mode <Ref. to EN(H4DOTC)(diag)-44, PROCEDURE, Inspection Mode.>.

	Step	Check	Yes	No
1	**CHECK FOR ANY OTHER DTC ON DISPLAY.**	Is any other DTC displayed?	Check the appropriate DTC using the "List of Diagnostic Trouble Code (DTC)". <Ref. to EN(H4DOTC)(diag)-78, List of Diagnostic Trouble Code (DTC).>	Go to step **2**.
2	**CHECK AIR CLEANER ELEMENT.** 1) Turn the ignition switch to OFF. 2) Check the air cleaner element.	Is there excessive clogging on air cleaner element?	Replace the air cleaner element. <Ref. to IN(H4DOTC)-7, Air Cleaner Element.>	Go to step **3**.
3	**CHECK ELECTRONIC THROTTLE CONTROL.** 1) Remove the electronic throttle control. <Ref. to FU(H4DOTC)-15, REMOVAL, Throttle Body.> 2) Check the electronic throttle control.	Are foreign matter found inside electronic throttle control?	Remove foreign matter from electronic throttle control.	Perform the diagnosis of DTC P2101. <Ref. to EN(H4DOTC)(diag)-309, DTC P2101 THROTTLE ACTUATOR CONTROL MOTOR CIRCUIT RANGE/PERFORMANCE, Diagnostic Procedure with Diagnostic Trouble Code (DTC).>

CA:DTC P0507 IDLE AIR CONTROL SYSTEM RPM HIGHER THAN EXPECTED

DTC DETECTING CONDITION:

- Detected when two consecutive driving cycles with fault occur.
- GENERAL DESCRIPTION <Ref. to GD(H4DOTC)-153, DTC P0507 IDLE AIR CONTROL SYSTEM RPM HIGHER THAN EXPECTED, Diagnostic Trouble Code (DTC) Detecting Criteria.>

TROUBLE SYMPTOM:

Engine keeps running at higher speed than specified idle speed.

CAUTION:

After servicing or replacing faulty parts, perform Clear Memory Mode <Ref. to EN(H4DOTC)(diag)-55, OPERATION, Clear Memory Mode.>, and Inspection Mode <Ref. to EN(H4DOTC)(diag)-44, PROCEDURE, Inspection Mode.>.

	Step	Check	Yes	No
1	**CHECK FOR ANY OTHER DTC ON DISPLAY.**	Is any other DTC displayed?	Check the appropriate DTC using the "List of Diagnostic Trouble Code (DTC)". <Ref. to EN(H4DOTC)(diag)-78, List of Diagnostic Trouble Code (DTC).>	Go to step **2**.
2	**CHECK AIR INTAKE SYSTEM.** 1) Start and idle the engine. 2) Check the following items. • Loose installation of intake manifold and throttle body • Cracks of intake manifold gasket and throttle body gasket • Disconnection of vacuum hoses	Is there any fault in air intake system?	Repair air suction and leaks.	Go to step **3**.
3	**CHECK ELECTRONIC THROTTLE CONTROL.** 1) Turn the ignition switch to OFF. 2) Remove the electronic throttle control. <Ref. to FU(H4DOTC)-15, REMOVAL, Throttle Body.> 3) Check the electronic throttle control.	Are foreign matter found inside electronic throttle control?	Remove foreign matter from electronic throttle control.	Perform the diagnosis of DTC P2101. <Ref. to EN(H4DOTC)(diag)-309, DTC P2101 THROTTLE ACTUATOR CONTROL MOTOR CIRCUIT RANGE/PERFORMANCE, Diagnostic Procedure with Diagnostic Trouble Code (DTC).>

CB:DTC P0512 STARTER REQUEST CIRCUIT

DTC DETECTING CONDITION:

- Immediately at fault recognition
- GENERAL DESCRIPTION <Ref. to GD(H4DOTC)-154, DTC P0512 STARTER REQUEST CIRCUIT, Diagnostic Trouble Code (DTC) Detecting Criteria.>

TROUBLE SYMPTOM:

Failure of engine to start

CAUTION:

After servicing or replacing faulty parts, perform Clear Memory Mode <Ref. to EN(H4DOTC)(diag)-55, OPERATION, Clear Memory Mode.>, and Inspection Mode <Ref. to EN(H4DOTC)(diag)-44, PROCEDURE, Inspection Mode.>.

WIRING DIAGRAM:

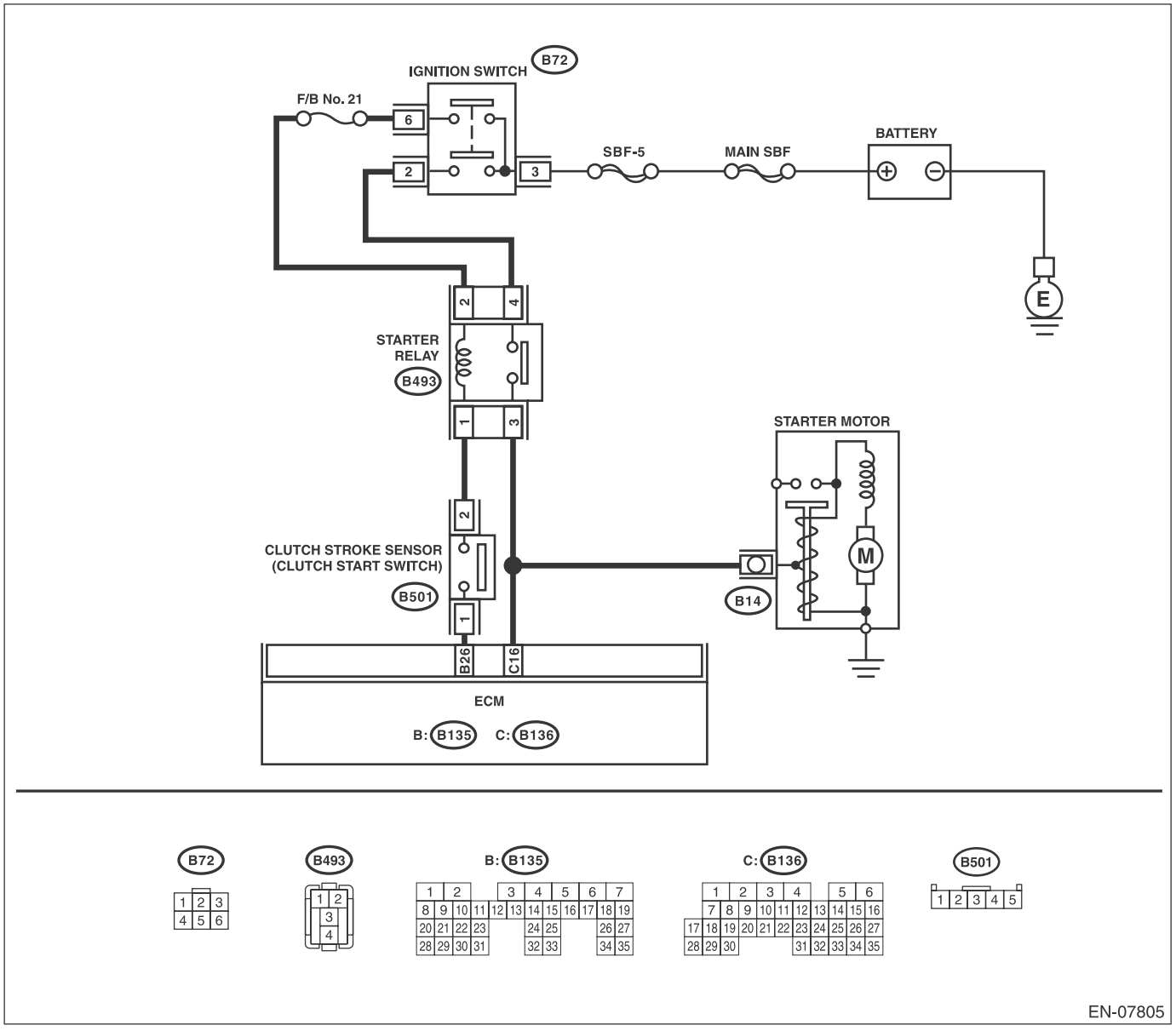

	Step	Check	Yes	No
1	**CHECK FOR ANY OTHER DTC ON DISPLAY.**	Is any other DTC displayed?	Check the appropriate DTC using the “List of Diagnostic Trouble Code (DTC)”. <Ref. to EN(H4DOTC)(diag)-78, List of Diagnostic Trouble Code (DTC).>	Go to step **2**.
2	**CHECK HARNESS BETWEEN ECM AND STARTER RELAY CONNECTOR.** 1) Turn the ignition switch to OFF. 2) Disconnect the connector from ECM. 3) Turn the ignition switch to ON. 4) Measure the voltage between ECM and chassis ground. ***Connector & terminal*** ***(B136) No. 16 (+) — Chassis ground (–):***	Is the voltage 10 V or more?	Repair the short circuit to power supply in harness between ECM and starter relay connector.	Repair the poor contact of ECM connector.

CC:DTC P0604 INTERNAL CONTROL MODULE RANDOM ACCESS MEMORY (RAM) ERROR

DTC DETECTING CONDITION:

- Immediately at fault recognition
- GENERAL DESCRIPTION <Ref. to GD(H4DOTC)-156, DTC P0604 INTERNAL CONTROL MODULE RANDOM ACCESS MEMORY (RAM) ERROR, Diagnostic Trouble Code (DTC) Detecting Criteria.>

TROUBLE SYMPTOM:

- Engine does not start.
- Engine stalls.

CAUTION:

After servicing or replacing faulty parts, perform Clear Memory Mode <Ref. to EN(H4DOTC)(diag)-55, OPERATION, Clear Memory Mode.>, and Inspection Mode <Ref. to EN(H4DOTC)(diag)-44, PROCEDURE, Inspection Mode.>.

WIRING DIAGRAM:

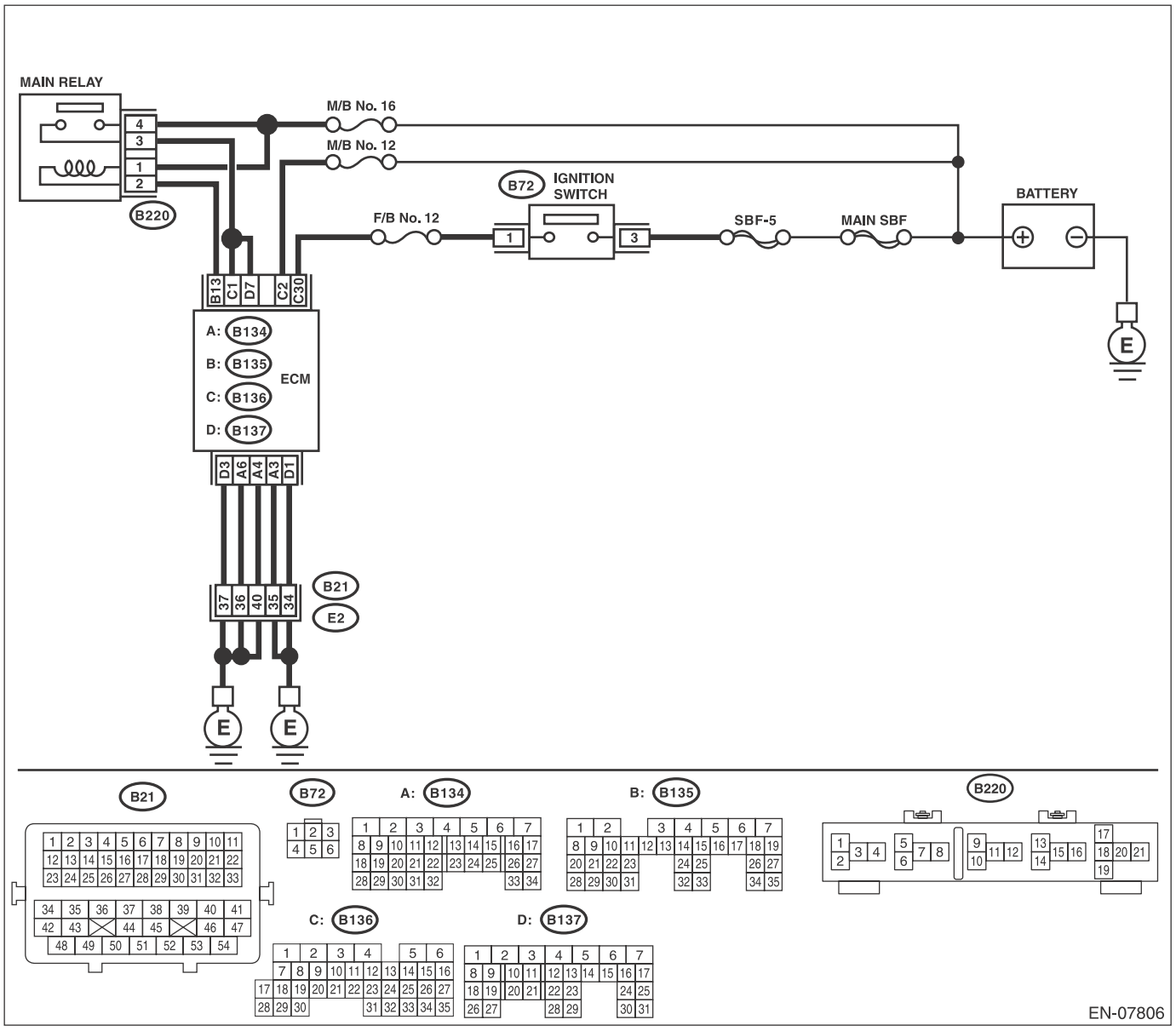

Step		Check	Yes	No
1	**CHECK FOR ANY OTHER DTC ON DISPLAY.**	Is any other DTC displayed?	Check the appropriate DTC using the “List of Diagnostic Trouble Code (DTC)”. <Ref. to EN(H4DOTC)(diag)-78, List of Diagnostic Trouble Code (DTC).>	Even if DTC is detected, the circuit has returned to a normal condition at this time. Reproduce the failure, and then perform the diagnosis again. NOTE: In this case, temporary poor contact of connector, temporary open or short circuit of harness may be the cause.

CD:DTC P0605 INTERNAL CONTROL MODULE READ ONLY MEMORY (ROM) ERROR

NOTE:
For the diagnostic procedure, refer to DTC P0607. <Ref. to EN(H4DOTC)(diag)-230, DTC P0607 THROTTLE CONTROL SYSTEM CIRCUIT RANGE/PERFORMANCE, Diagnostic Procedure with Diagnostic Trouble Code (DTC).>

CE:DTC P0607 THROTTLE CONTROL SYSTEM CIRCUIT RANGE/PERFORMANCE

DTC DETECTING CONDITION:

- Immediately at fault recognition
- GENERAL DESCRIPTION <Ref. to GD(H4DOTC)-158, DTC P0607 THROTTLE CONTROL SYSTEM CIRCUIT RANGE/PERFORMANCE, Diagnostic Trouble Code (DTC) Detecting Criteria.>

TROUBLE SYMPTOM:

- Improper idling
- Poor driving performance

CAUTION:

After servicing or replacing faulty parts, perform Clear Memory Mode <Ref. to EN(H4DOTC)(diag)-55, OPERATION, Clear Memory Mode.>, and Inspection Mode <Ref. to EN(H4DOTC)(diag)-44, PROCEDURE, Inspection Mode.>.

WIRING DIAGRAM:

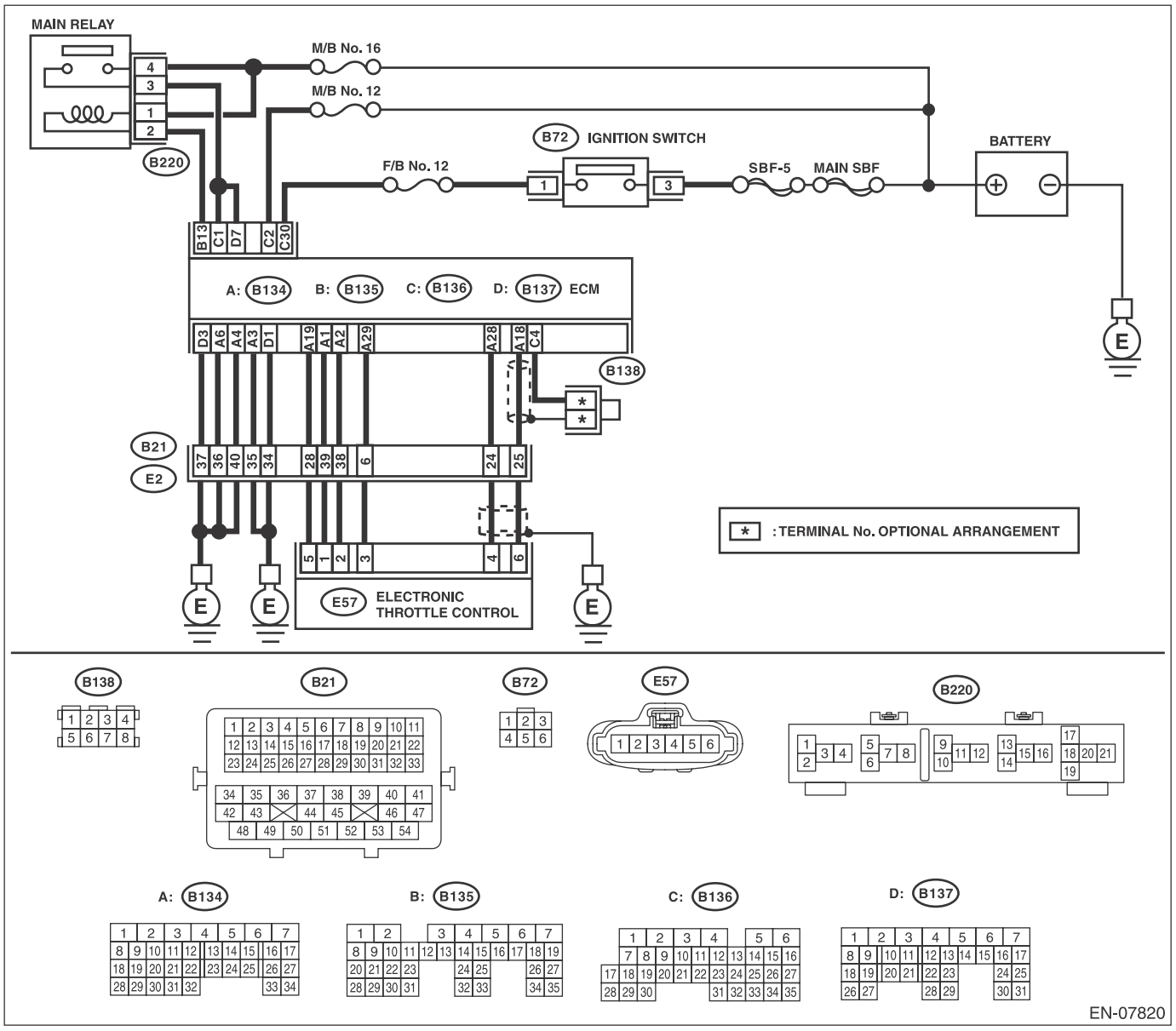

	Step	Check	Yes	No
1	**CHECK INPUT VOLTAGE OF ECM.** 1) Turn the ignition switch to ON. 2) Measure the voltage between ECM and chassis ground. ***Connector & terminal*** ***(B136) No. 1 (+) — Chassis ground (–):*** ***(B137) No. 7 (+) — Chassis ground (–):***	Is the voltage 10 — 13 V?	Go to step **2**.	Repair the open or ground short circuit of power supply circuit.
2	**CHECK INPUT VOLTAGE OF ECM.** 1) Start the engine. 2) Measure the voltage between ECM and chassis ground. ***Connector & terminal*** ***(B136) No. 1 (+) — Chassis ground (–):*** ***(B137) No. 7 (+) — Chassis ground (–):***	Is the voltage 13 — 15 V?	Go to step **3**.	Repair the open or ground short circuit of power supply circuit.
3	**CHECK HARNESS BETWEEN ECM AND ELECTRONIC THROTTLE CONTROL CONNECTOR.** 1) Turn the ignition switch to OFF. 2) Disconnect the connectors from the ECM and electronic throttle control. 3) Measure the resistance of harness between ECM and electronic throttle control connector. ***Connector & terminal*** ***(B134) No. 19 — (E57) No. 5:*** ***(B134) No. 29 — (E57) No. 3:***	Is the resistance less than 1 Ω?	Go to step **4**.	Repair the harness and connector. NOTE: In this case, repair the following item: • Open circuit in harness between ECM and electronic throttle control connector • Poor contact of coupling connector
4	**CHECK ECM GROUND HARNESS.** 1) Connect all connectors. 2) Turn the ignition switch to ON. 3) Measure the voltage between ECM and chassis ground. ***Connector & terminal*** ***(B134) No. 3 (+) — Chassis ground (–):*** ***(B134) No. 4 (+) — Chassis ground (–):*** ***(B134) No. 6 (+) — Chassis ground (–):*** ***(B137) No. 1 (+) — Chassis ground (–):*** ***(B137) No. 3 (+) — Chassis ground (–):***	Is the voltage less than 1 V?	Repair the poor contact of ECM connector.	Repair the harness and connector. NOTE: In this case, repair the following item: • Open circuit in ground circuit • Retightening of engine ground terminals • Poor contact of coupling connector

CF:DTC P0638 THROTTLE ACTUATOR CONTROL RANGE/PERFORMANCE (BANK 1)

NOTE:
For the diagnostic procedure, refer to DTC P2101. <Ref. to EN(H4DOTC)(diag)-309, DTC P2101 THROTTLE ACTUATOR CONTROL MOTOR CIRCUIT RANGE/PERFORMANCE, Diagnostic Procedure with Diagnostic Trouble Code (DTC).>

CG:DTC P0851 NEUTRAL SWITCH INPUT CIRCUIT LOW (MT MODEL)

DTC DETECTING CONDITION:

- Detected when two consecutive driving cycles with fault occur.
- GENERAL DESCRIPTION <Ref. to GD(H4DOTC)-162, DTC P0851 NEUTRAL SWITCH INPUT CIRCUIT LOW (MT MODEL), Diagnostic Trouble Code (DTC) Detecting Criteria.>

TROUBLE SYMPTOM:

Improper idling

CAUTION:

After servicing or replacing faulty parts, perform Clear Memory Mode <Ref. to EN(H4DOTC)(diag)-55, OPERATION, Clear Memory Mode.>, and Inspection Mode <Ref. to EN(H4DOTC)(diag)-44, PROCEDURE, Inspection Mode.>.

WIRING DIAGRAM:

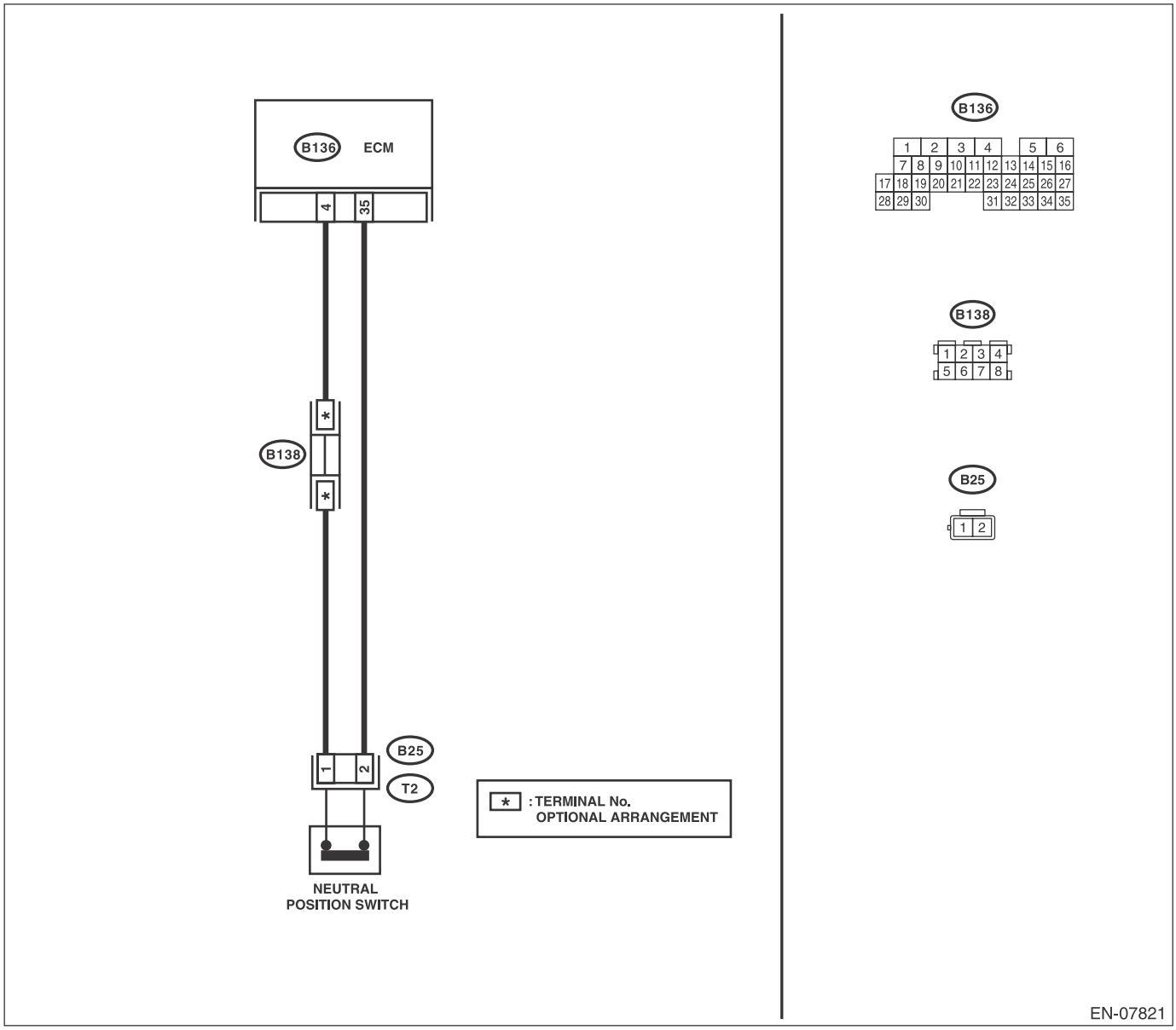

	Step	Check	Yes	No
1	**CHECK INPUT SIGNAL OF ECM.** 1) Turn the ignition switch to ON. 2) Place the shift lever in a position other than neutral. 3) Measure the voltage between ECM and chassis ground. ***Connector & terminal*** ***(B136) No. 35 (+) — Chassis ground (–):***	Is the voltage 10 V or more?	Repair the poor contact of ECM connector.	Go to step **2**.
2	**CHECK HARNESS BETWEEN ECM AND NEUTRAL POSITION SWITCH CONNECTOR.** 1) Turn the ignition switch to OFF. 2) Disconnect the connectors from ECM and neutral position switch. 3) Measure the resistance between ECM and chassis ground. ***Connector & terminal*** ***(B136) No. 35 — Chassis ground:***	Is the resistance 1 MΩ or more?	Replace the neutral position switch. <Ref. to 6MT-36, Switches and Harness.>	Repair the short circuit to ground harness between ECM and neutral position switch connector.

CH:DTC P0852 NEUTRAL SWITCH INPUT CIRCUIT HIGH (MT MODEL)

DTC DETECTING CONDITION:

- Detected when two consecutive driving cycles with fault occur.
- GENERAL DESCRIPTION <Ref. to GD(H4DOTC)-163, DTC P0852 NEUTRAL SWITCH INPUT CIRCUIT HIGH (MT MODEL), Diagnostic Trouble Code (DTC) Detecting Criteria.>

TROUBLE SYMPTOM:

Improper idling

CAUTION:

After servicing or replacing faulty parts, perform Clear Memory Mode <Ref. to EN(H4DOTC)(diag)-55, OPERATION, Clear Memory Mode.>, and Inspection Mode <Ref. to EN(H4DOTC)(diag)-44, PROCEDURE, Inspection Mode.>.

WIRING DIAGRAM:

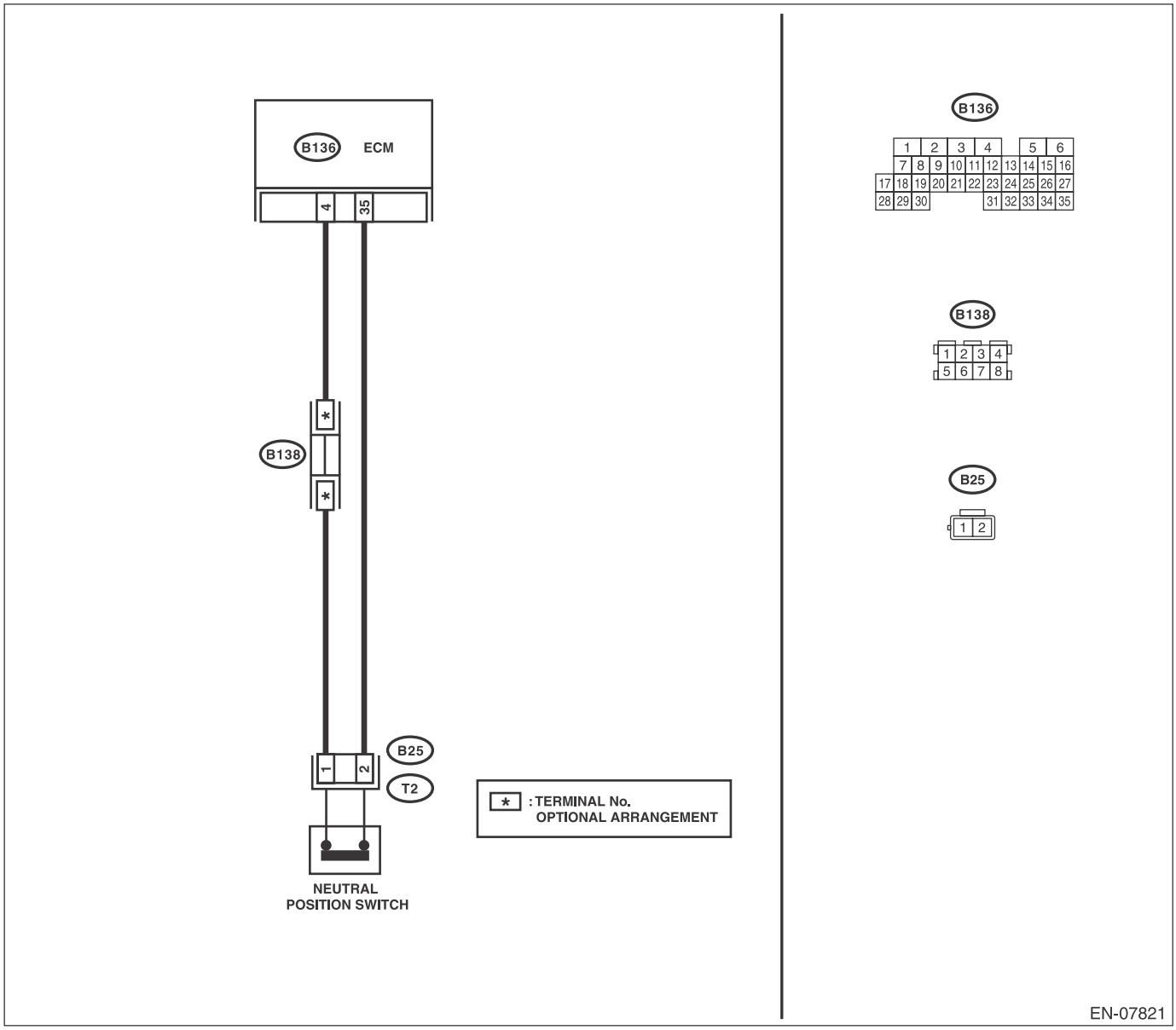

	Step	Check	Yes	No
1	**CHECK INPUT SIGNAL OF ECM.** 1) Turn the ignition switch to ON. 2) Place the shift lever in neutral. 3) Measure the voltage between ECM and chassis ground. ***Connector & terminal*** ***(B136) No. 35 (+) — Chassis ground (–):***	Is the voltage less than 1 V?	Repair the poor contact of ECM connector.	Go to step **2**.
2	**CHECK HARNESS BETWEEN ECM AND NEUTRAL POSITION SWITCH CONNECTOR.** 1) Turn the ignition switch to OFF. 2) Disconnect the connectors from ECM and neutral position switch. 3) Measure the resistance of harness between ECM and neutral position switch connector. ***Connector & terminal*** ***(B136) No. 35 — (B25) No. 2:*** ***(B136) No. 4 — (B25) No. 1:***	Is the resistance less than 1 Ω?	Go to step **3**.	Repair the harness and connector. NOTE: In this case, repair the following item: • Open circuit in harness between ECM and neutral position switch connector • Poor contact of coupling connector
3	**CHECK NEUTRAL POSITION SWITCH.** 1) Place the shift lever in neutral. 2) Measure the resistance between neutral position switch terminals. ***Terminals*** ***No. 1 — No. 2:***	Is the resistance less than 1 Ω?	Repair the poor contact of neutral position switch connector.	Replace the neutral position switch. <Ref. to 6MT-36, Switches and Harness.>

CI: DTC P1152 O2 SENSOR CIRCUIT RANGE/PERFORMANCE (LOW) (BANK1 SENSOR1)

DTC DETECTING CONDITION:

- Detected when two consecutive driving cycles with fault occur.
- GENERAL DESCRIPTION <Ref. to GD(H4DOTC)-164, DTC P1152 O2 SENSOR CIRCUIT RANGE/PERFORMANCE (LOW) (BANK1 SENSOR1), Diagnostic Trouble Code (DTC) Detecting Criteria.>

CAUTION:

After servicing or replacing faulty parts, perform Clear Memory Mode <Ref. to EN(H4DOTC)(diag)-55, OPERATION, Clear Memory Mode.>, and Inspection Mode <Ref. to EN(H4DOTC)(diag)-44, PROCEDURE, Inspection Mode.>.

WIRING DIAGRAM:

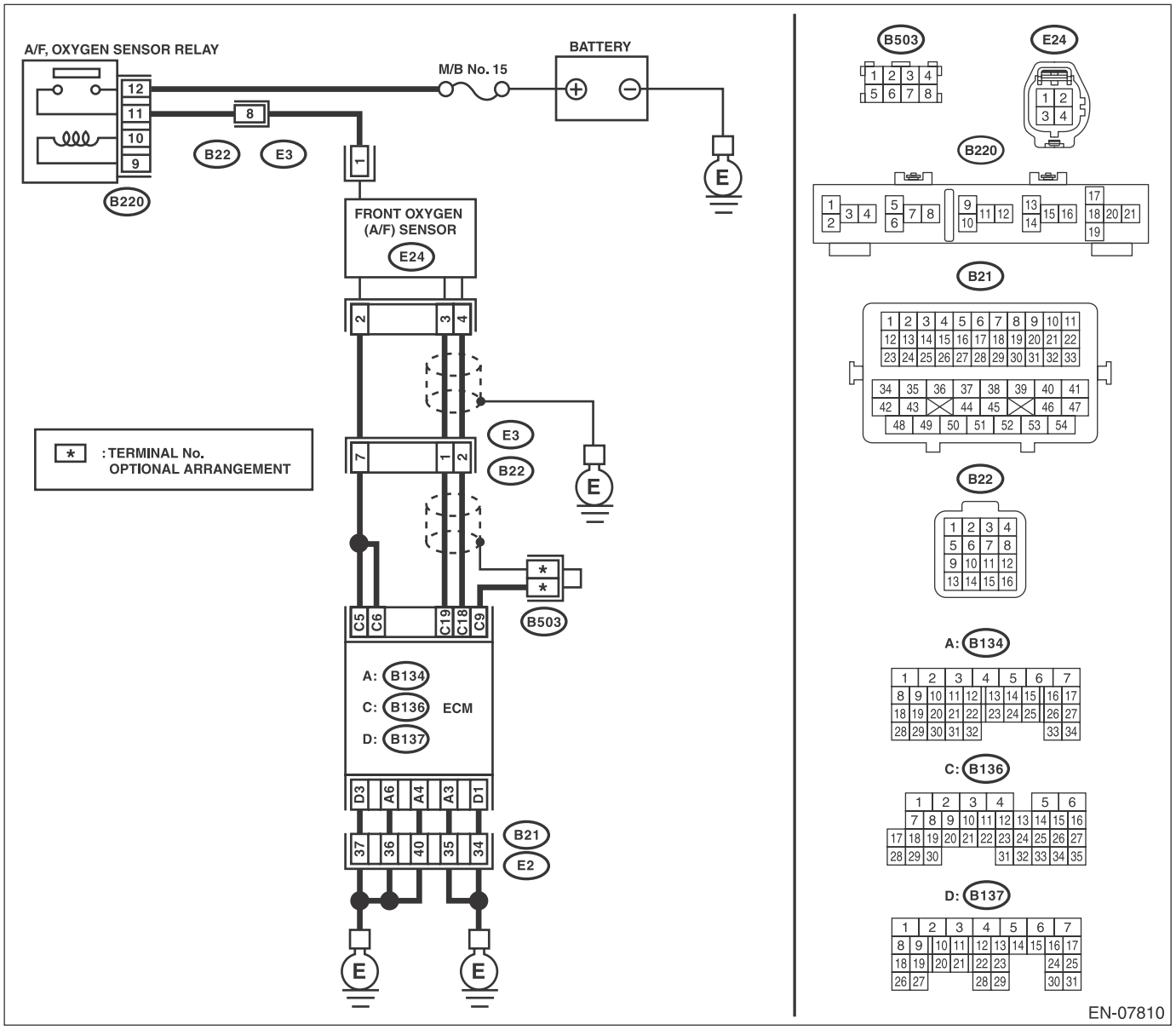

Step		Check	Yes	No
1	**CHECK FRONT OXYGEN (A/F) SENSOR CONNECTOR AND COUPLING CONNECTOR.**	Has water entered the connector?	Completely remove any water inside.	Go to step **2**.

	Step	Check	Yes	No
2	**CHECK HARNESS BETWEEN ECM AND FRONT OXYGEN (A/F) SENSOR CONNECTOR.** 1) Turn the ignition switch to OFF. 2) Disconnect the connectors from ECM and front oxygen (A/F) sensor. 3) Measure the resistance of harness between ECM and front oxygen (A/F) sensor connector. ***Connector & terminal*** ***(B136) No. 19 — (E24) No. 3:*** ***(B136) No. 18 — (E24) No. 4:***	Is the resistance less than 1 Ω?	Go to step **3**.	Repair the harness and connector. NOTE: In this case, repair the following item: • Open circuit in harness between ECM and front oxygen (A/F) sensor connector • Poor contact of coupling connector
3	**CHECK FOR POOR CONTACT.** Check for poor contact of the front oxygen (A/F) sensor connector.	Is there poor contact of front oxygen (A/F) sensor connector?	Repair the poor contact of front oxygen (A/F) sensor connector.	Replace the front oxygen (A/F) sensor. <Ref. to FU(H4DOTC)-53, Front Oxygen (A/F) Sensor.>

CJ:DTC P1153 O2 SENSOR CIRCUIT RANGE/PERFORMANCE (HIGH) (BANK1 SENSOR1)

DTC DETECTING CONDITION:

- Detected when two consecutive driving cycles with fault occur.
- GENERAL DESCRIPTION <Ref. to GD(H4DOTC)-166, DTC P1153 O2 SENSOR CIRCUIT RANGE/PERFORMANCE (HIGH) (BANK1 SENSOR1), Diagnostic Trouble Code (DTC) Detecting Criteria.>

CAUTION:

After servicing or replacing faulty parts, perform Clear Memory Mode <Ref. to EN(H4DOTC)(diag)-55, OPERATION, Clear Memory Mode.>, and Inspection Mode <Ref. to EN(H4DOTC)(diag)-44, PROCEDURE, Inspection Mode.>.

WIRING DIAGRAM:

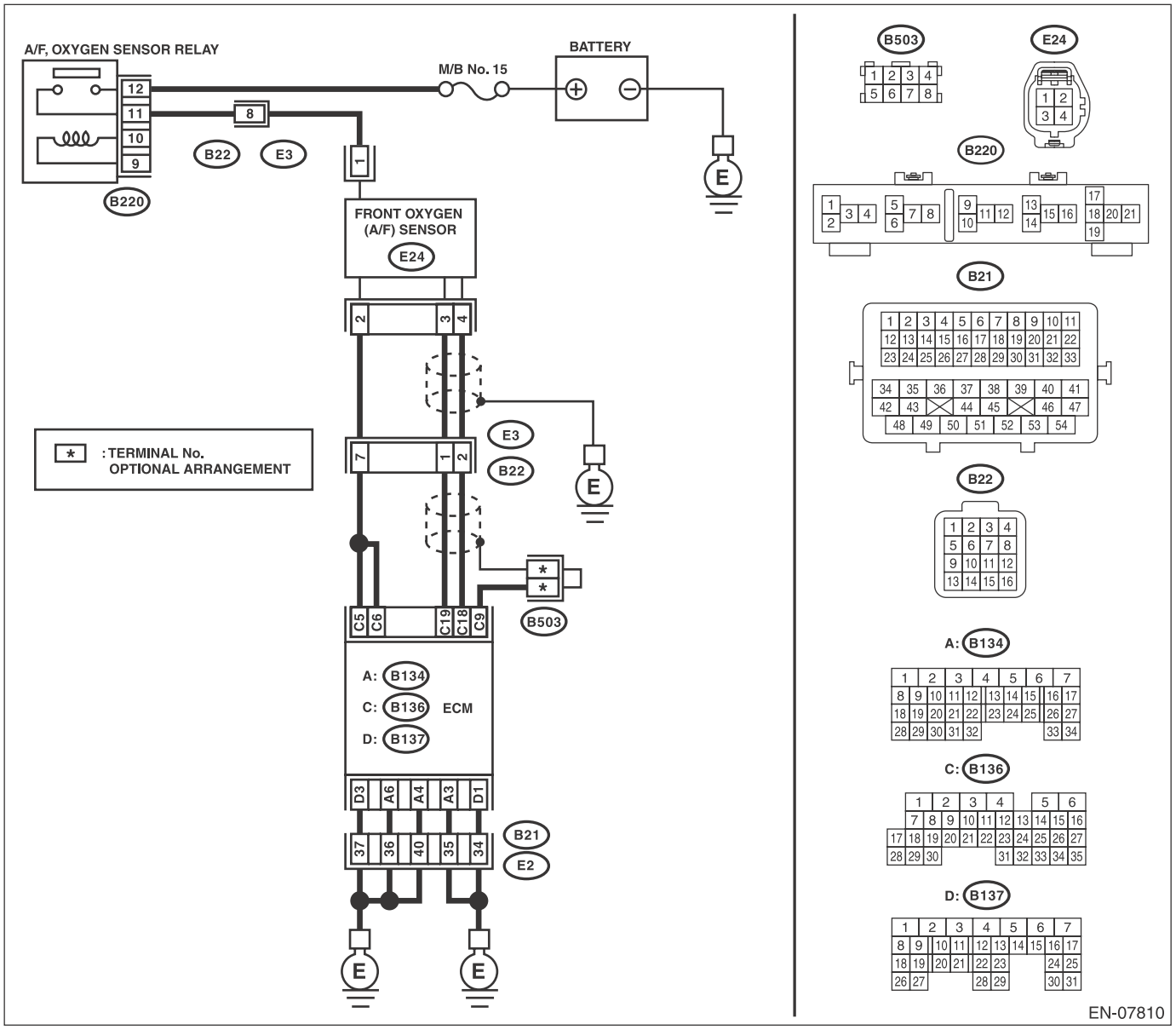

Step		Check	Yes	No
1	**CHECK FRONT OXYGEN (A/F) SENSOR CONNECTOR AND COUPLING CONNECTOR.**	Has water entered the connector?	Completely remove any water inside.	Go to step **2**.

	Step	Check	Yes	No
2	**CHECK HARNESS BETWEEN ECM AND FRONT OXYGEN (A/F) SENSOR CONNECTOR.** 1) Turn the ignition switch to OFF. 2) Disconnect the connector from ECM. 3) Measure the resistance between ECM and chassis ground. ***Connector & terminal*** ***(B136) No. 19 — Chassis ground:*** ***(B136) No. 18 — Chassis ground:***	Is the resistance 1 MΩ or more?	Go to step **3**.	Repair the ground short circuit of harness between ECM and front oxygen (A/F) sensor connector.
3	**CHECK OUTPUT SIGNAL FOR ECM.** 1) Connect the connector to ECM. 2) Turn the ignition switch to ON. 3) Measure the voltage between ECM and chassis ground. ***Connector & terminal*** ***(B136) No. 19 (+) — Chassis ground (–):***	Is the voltage 4.5 V or more?	Go to step **5**.	Go to step **4**.
4	**CHECK OUTPUT SIGNAL FOR ECM.** Measure the voltage between ECM and chassis ground. ***Connector & terminal*** ***(B136) No. 18 (+) — Chassis ground (–):***	Is the voltage 4.95 V or more?	Go to step **5**.	Replace the front oxygen (A/F) sensor. <Ref. to FU(H4DOTC)-53, Front Oxygen (A/F) Sensor.>
5	**CHECK OUTPUT SIGNAL FOR ECM.** Measure the voltage between ECM and chassis ground. ***Connector & terminal*** ***(B136) No. 19 (+) — Chassis ground (–):*** ***(B136) No. 18 (+) — Chassis ground (–):***	Is the voltage 8 V or more?	Repair the short circuit of harness to power supply between ECM and front oxygen (A/F) sensor connector. After repair, replace the ECM. <Ref. to FU(H4DOTC)-57, Engine Control Module (ECM).>	Repair the poor contact of ECM connector.

CK:DTC P1160 RETURN SPRING FAILURE

NOTE:
For the diagnostic procedure, refer to DTC P2101. <Ref. to EN(H4DOTC)(diag)-309, DTC P2101 THROTTLE ACTUATOR CONTROL MOTOR CIRCUIT RANGE/PERFORMANCE, Diagnostic Procedure with Diagnostic Trouble Code (DTC).>

CL:DTC P1400 FUEL TANK PRESSURE CONTROL SOLENOID VALVE CIRCUIT LOW

DTC DETECTING CONDITION:

- Detected when two consecutive driving cycles with fault occur.
- GENERAL DESCRIPTION <Ref. to GD(H4DOTC)-170, DTC P1400 FUEL TANK PRESSURE CONTROL SOLENOID VALVE CIRCUIT LOW, Diagnostic Trouble Code (DTC) Detecting Criteria.>

CAUTION:

After servicing or replacing faulty parts, perform Clear Memory Mode <Ref. to EN(H4DOTC)(diag)-55, OPERATION, Clear Memory Mode.>, and Inspection Mode <Ref. to EN(H4DOTC)(diag)-44, PROCEDURE, Inspection Mode.>.

WIRING DIAGRAM:

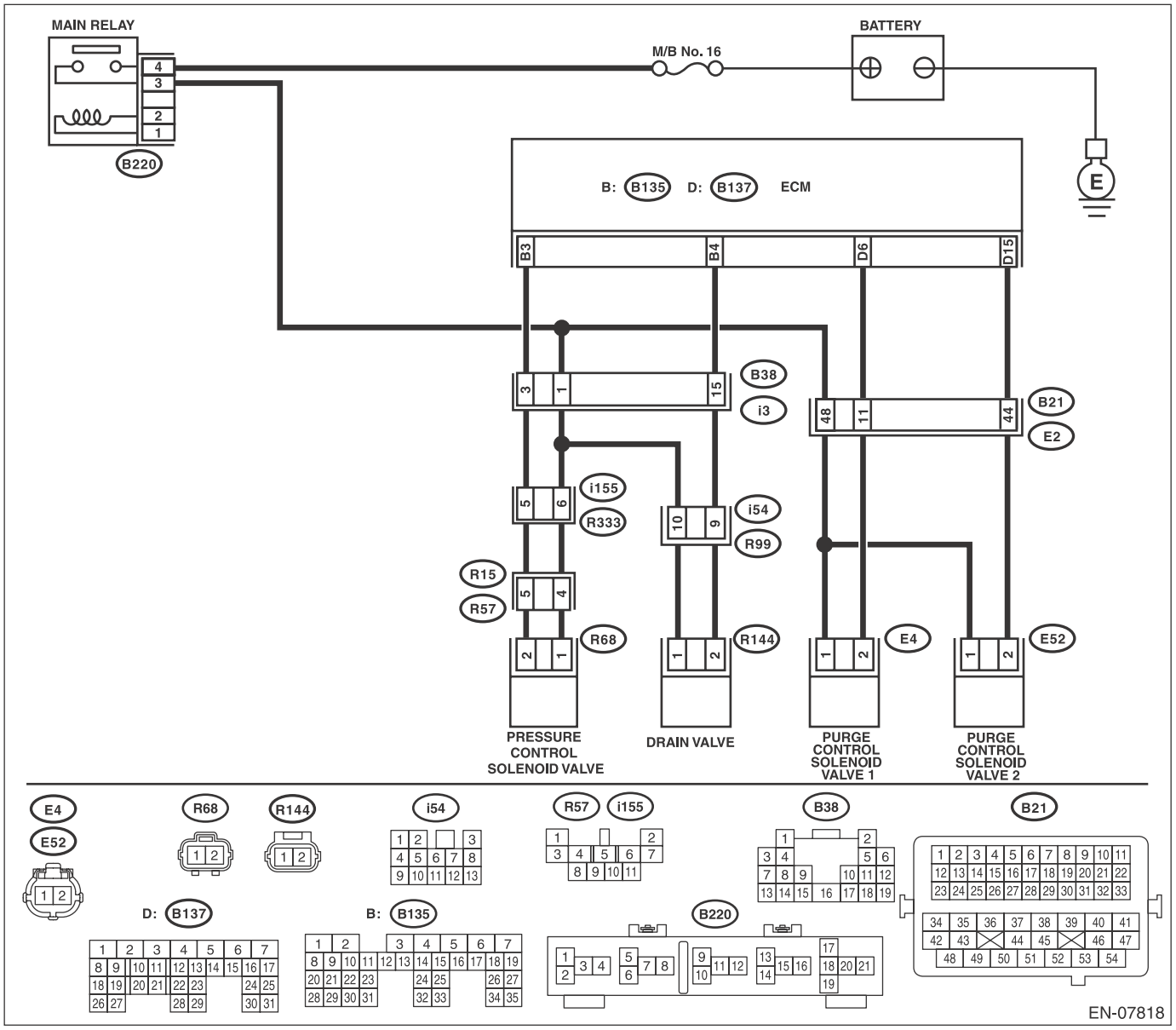

	Step	Check	Yes	No
1	**CHECK OUTPUT SIGNAL OF ECM.** 1) Turn the ignition switch to ON. 2) Measure the voltage between ECM and chassis ground. ***Connector & terminal*** ***(B135) No. 3 (+) — Chassis ground (–):***	Is the voltage 10 V or more?	Go to step **2**.	Go to step **3**.
2	**CHECK FOR POOR CONTACT.** Check for poor contact of ECM connector.	Is there poor contact of ECM connector?	Repair the poor contact of ECM connector.	Even if DTC is detected, the circuit has returned to a normal condition at this time. Reproduce the failure, and then perform the diagnosis again. NOTE: In this case, temporary open or short circuit of harness or temporary poor contact of connector may be the cause.
3	**CHECK POWER SUPPLY TO THE PRESSURE CONTROL SOLENOID VALVE.** Measure the voltage between pressure control solenoid valve and chassis ground. ***Connector & terminal*** ***(R68) No. 1 (+) — Chassis ground (–):***	Is the voltage 10 V or more?	Go to step **4**.	Repair the power supply circuit.
4	**CHECK HARNESS BETWEEN ECM AND PRESSURE CONTROL SOLENOID VALVE CONNECTOR.** 1) Turn the ignition switch to OFF. 2) Disconnect the connector from the ECM and pressure control solenoid valve. 3) Measure the resistance between pressure control solenoid valve and chassis ground. ***Connector & terminal*** ***(R68) No. 2 — Chassis ground:***	Is the resistance 1 MΩ or more?	Go to step **5**.	Repair the ground short circuit of harness between ECM and pressure control solenoid valve connector.
5	**CHECK HARNESS BETWEEN ECM AND PRESSURE CONTROL SOLENOID VALVE CONNECTOR.** Measure the resistance of harness between ECM and pressure control solenoid valve connector. ***Connector & terminal*** ***(B135) No. 3 — (R68) No. 2:***	Is the resistance less than 1 Ω?	Go to step **6**.	Repair the harness and connector. NOTE: In this case, repair the following item: • Open circuit in harness between ECM and pressure control solenoid valve connector • Poor contact of coupling connector
6	**CHECK PRESSURE CONTROL SOLENOID VALVE.** Measure the resistance between pressure control solenoid valve terminals. ***Terminals*** ***No. 1 — No. 2:***	Is the resistance 10 — 100 Ω?	Repair the poor contact of pressure control solenoid valve connector.	Replace the pressure control solenoid valve. <Ref. to EC(H4DOTC)-19, Pressure Control Solenoid Valve.>

CM:DTC P1420 FUEL TANK PRESSURE CONTROL SOL. VALVE CIRCUIT HIGH

DTC DETECTING CONDITION:

- Detected when two consecutive driving cycles with fault occur.
- GENERAL DESCRIPTION <Ref. to GD(H4DOTC)-172, DTC P1420 FUEL TANK PRESSURE CONTROL SOL. VALVE CIRCUIT HIGH, Diagnostic Trouble Code (DTC) Detecting Criteria.>

CAUTION:

After servicing or replacing faulty parts, perform Clear Memory Mode <Ref. to EN(H4DOTC)(diag)-55, OPERATION, Clear Memory Mode.>, and Inspection Mode <Ref. to EN(H4DOTC)(diag)-44, PROCEDURE, Inspection Mode.>.

WIRING DIAGRAM:

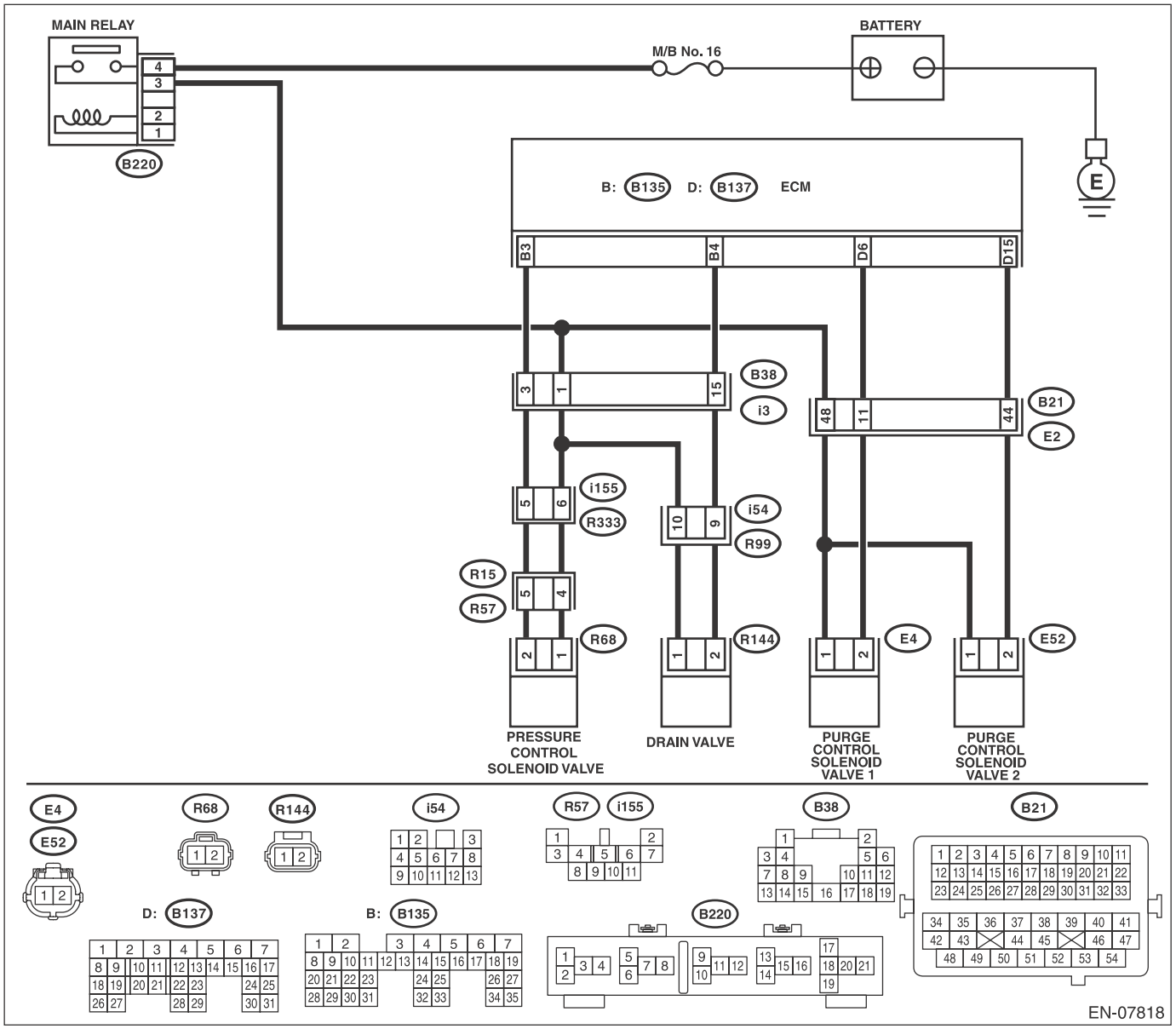

	Step	Check	Yes	No
1	**CHECK HARNESS BETWEEN ECM AND PRESSURE CONTROL SOLENOID VALVE CONNECTOR.** 1) Turn the ignition switch to OFF. 2) Disconnect the connector from the ECM and pressure control solenoid valve. 3) Turn the ignition switch to ON. 4) Measure the voltage between ECM and chassis ground. ***Connector & terminal*** ***(B135) No. 3 (+) — Chassis ground (–):***	Is the voltage 10 V or more?	Repair the short circuit to power in the harness between ECM and pressure control solenoid valve connector.	Go to step **2**.
2	**CHECK PRESSURE CONTROL SOLENOID VALVE.** 1) Turn the ignition switch to OFF. 2) Measure the resistance between pressure control solenoid valve terminals. ***Terminals*** ***No. 1 — No. 2:***	Is the resistance less than 1 Ω?	Replace the pressure control solenoid valve. <Ref. to EC(H4DOTC)-19, Pressure Control Solenoid Valve.>	Repair the poor contact of ECM connector.

CN:DTC P1443 VENT CONTROL SOLENOID VALVE FUNCTION PROBLEM

DTC DETECTING CONDITION:

- Immediately at fault recognition
- GENERAL DESCRIPTION <Ref. to GD(H4DOTC)-174, DTC P1443 VENT CONTROL SOLENOID VALVE FUNCTION PROBLEM, Diagnostic Trouble Code (DTC) Detecting Criteria.>

TROUBLE SYMPTOM:

Improper fuel supply

CAUTION:

After servicing or replacing faulty parts, perform Clear Memory Mode <Ref. to EN(H4DOTC)(diag)-55, OPERATION, Clear Memory Mode.>, and Inspection Mode <Ref. to EN(H4DOTC)(diag)-44, PROCEDURE, Inspection Mode.>.

WIRING DIAGRAM:

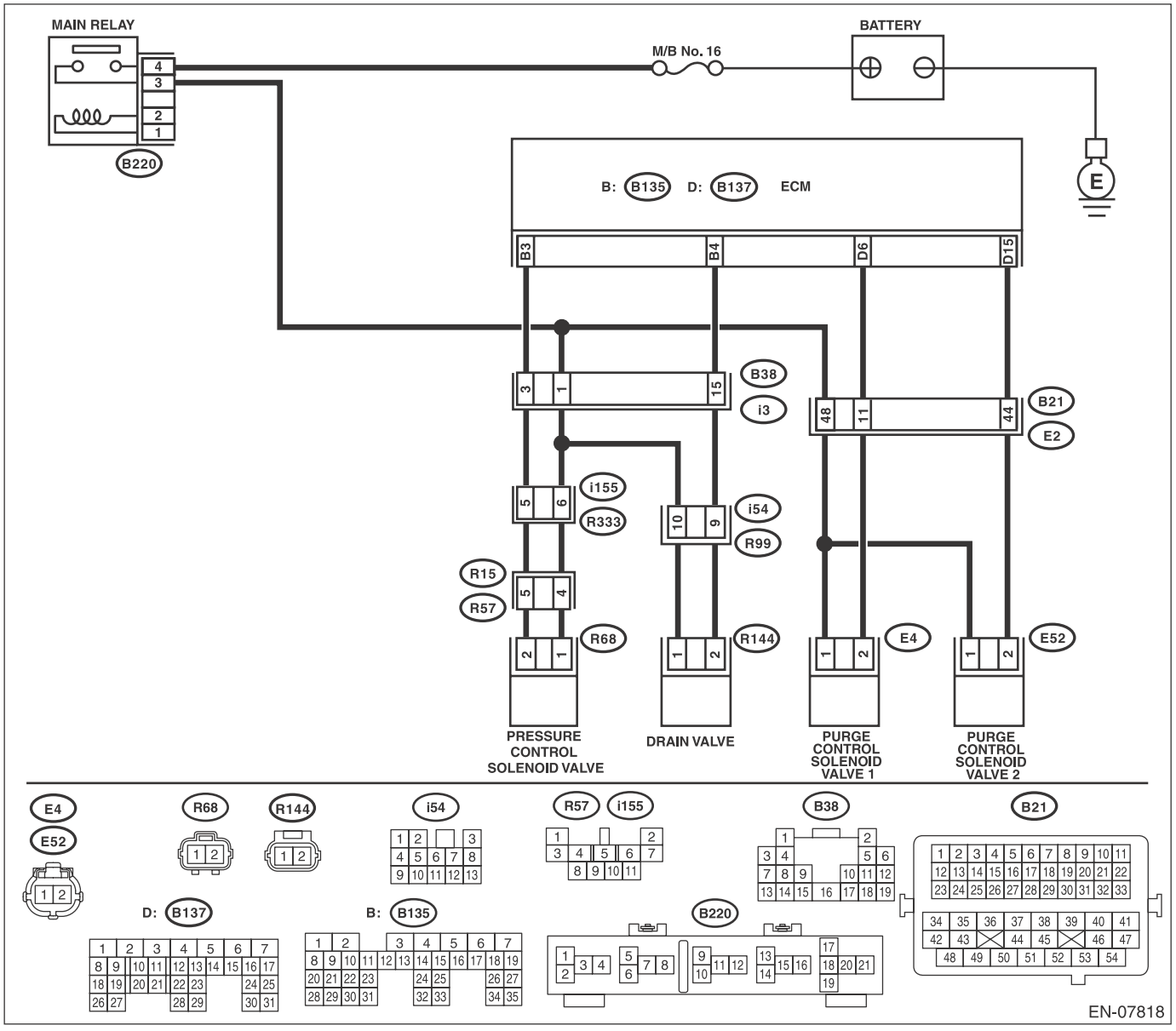

	Step	Check	Yes	No
1	**CHECK FOR ANY OTHER DTC ON DISPLAY.**	Is any other DTC displayed?	Check the appropriate DTC using the “List of Diagnostic Trouble Code (DTC)”. <Ref. to EN(H4DOTC)(diag)-78, List of Diagnostic Trouble Code (DTC).>	Go to step **2**.
2	**CHECK DRAIN HOSE.** Check the drain hose for clogging.	Is there clogging in the drain hose?	Replace the drain hose.	Go to step **3**.
3	**CHECK DRAIN VALVE OPERATION.** 1) Turn the ignition switch to OFF. 2) Install the delivery (test) mode fuse. 3) Turn the ignition switch to ON. 4) Perform operation check for the drain valve using the Subaru Select Monitor. NOTE: Drain valve can be operated using the Subaru Select Monitor. For detailed procedures, refer to “SYSTEM OPERATION CHECK MODE”. <Ref. to EN(H4DOTC)(diag)-56, System Operation Check Mode.>	Does the drain valve operate?	Repair the poor contact of ECM connector.	Replace the drain valve. <Ref. to EC(H4DOTC)-22, Drain Valve.>

CO:DTC P1518 STARTER SWITCH CIRCUIT LOW INPUT

DTC DETECTING CONDITION:

- Immediately at fault recognition
- GENERAL DESCRIPTION <Ref. to GD(H4DOTC)-176, DTC P1518 STARTER SWITCH CIRCUIT LOW INPUT, Diagnostic Trouble Code (DTC) Detecting Criteria.>

TROUBLE SYMPTOM:

Failure of engine to start

CAUTION:

After servicing or replacing faulty parts, perform Clear Memory Mode <Ref. to EN(H4DOTC)(diag)-55, OPERATION, Clear Memory Mode.>, and Inspection Mode <Ref. to EN(H4DOTC)(diag)-44, PROCEDURE, Inspection Mode.>.

WIRING DIAGRAM:

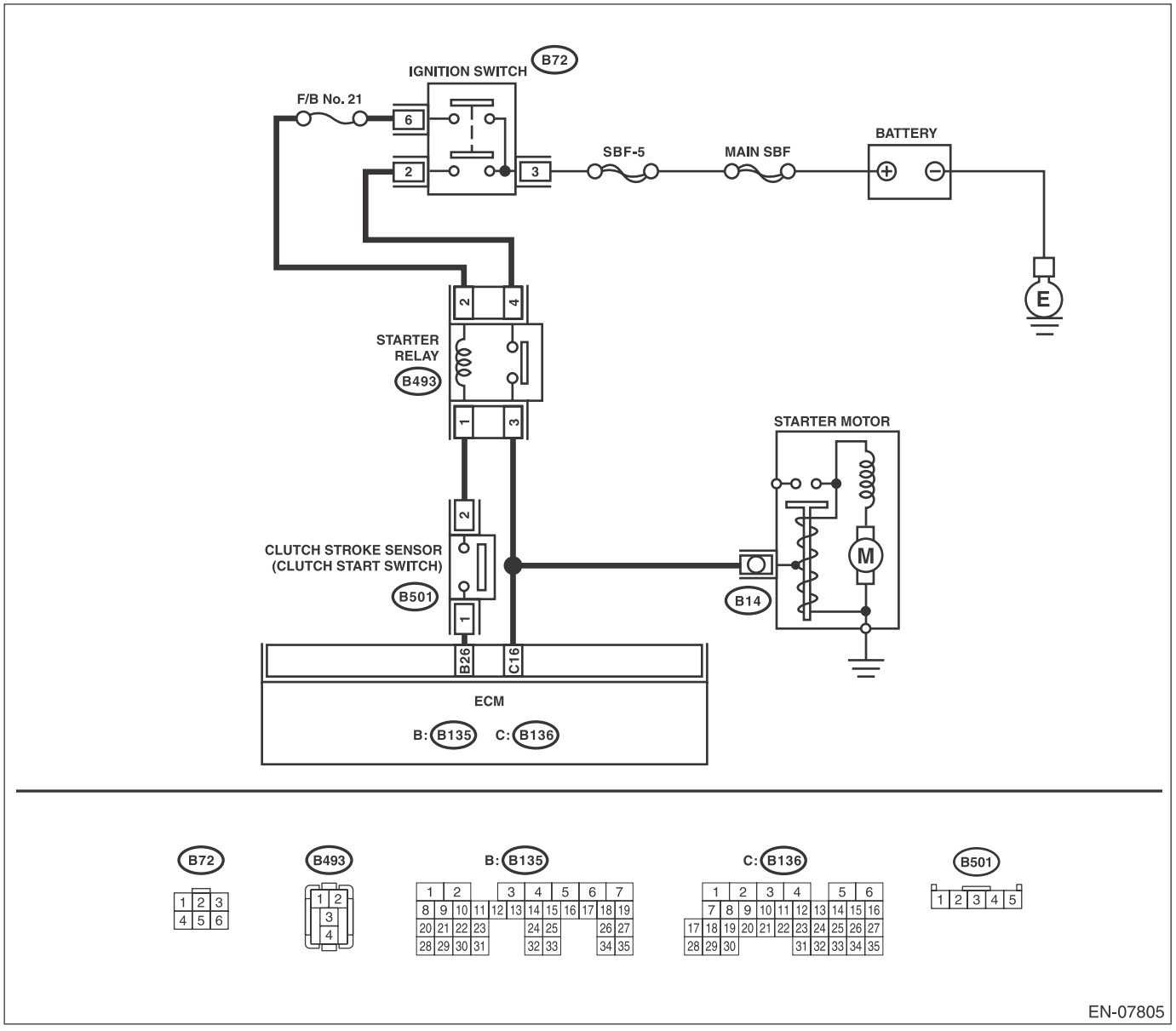

	Step	Check	Yes	No
1	**CHECK FOR ANY OTHER DTC ON DISPLAY.**	Is any other DTC displayed?	Check DTC using "List of Diagnostic Trouble Code (DTC)". <Ref. to EN(H4DOTC)(diag)-78, List of Diagnostic Trouble Code (DTC).>	Go to step **2**.
2	**CHECK HARNESS BETWEEN ECM AND STARTER RELAY CONNECTOR.** 1) Turn the ignition to OFF. 2) Remove the starter relay. 3) Disconnect the connectors from ECM and starter motor. 4) Measure the resistance of harness between ECM and starter relay connector. ***Connector & terminal*** ***(B136) No. 16 — (B493) No. 3:***	Is the resistance less than 1 Ω?	Go to step **3**.	Repair the open circuit of harness between ECM and starter relay connector.
3	**CHECK HARNESS BETWEEN ECM AND STARTER RELAY CONNECTOR.** Measure the resistance between ECM and chassis ground. ***Connector & terminal*** ***(B136) No. 16 — Chassis ground:***	Is the resistance 1 MΩ or more?	Repair the poor contact of ECM connector.	Repair the short circuit to ground in harness between ECM and starter relay connector.

CP:DTC P1560 BACK-UP VOLTAGE CIRCUIT MALFUNCTION

DTC DETECTING CONDITION:

- Immediately at fault recognition
- GENERAL DESCRIPTION <Ref. to GD(H4DOTC)-177, DTC P1560 BACK-UP VOLTAGE CIRCUIT MALFUNCTION, Diagnostic Trouble Code (DTC) Detecting Criteria.>

CAUTION:

After servicing or replacing faulty parts, perform Clear Memory Mode <Ref. to EN(H4DOTC)(diag)-55, OPERATION, Clear Memory Mode.>, and Inspection Mode <Ref. to EN(H4DOTC)(diag)-44, PROCEDURE, Inspection Mode.>.

WIRING DIAGRAM:

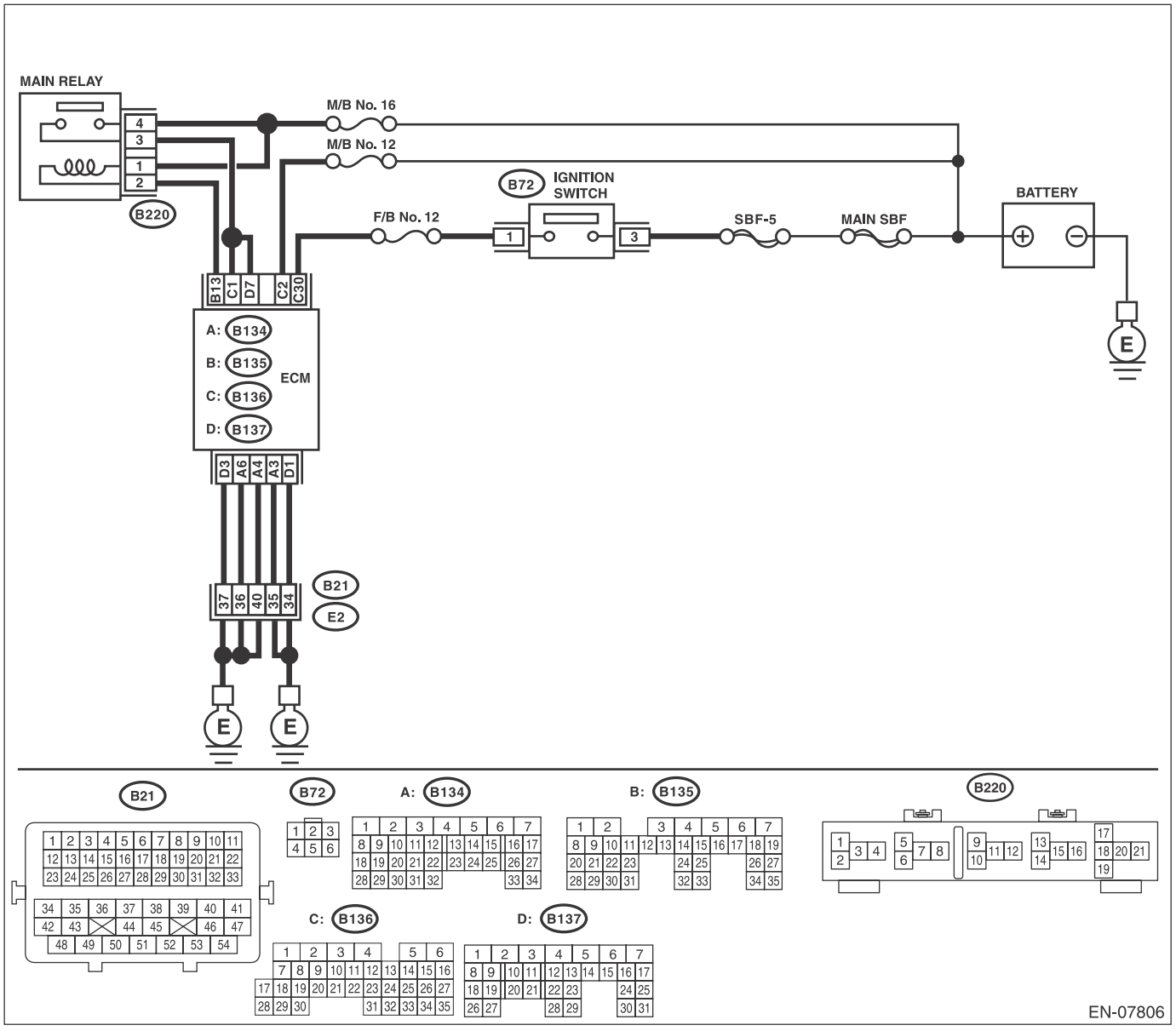

Step		Check	Yes	No
1	**CHECK INPUT SIGNAL OF ECM.** 1) Turn the ignition switch to OFF. 2) Measure the voltage between ECM and chassis ground. ***Connector & terminal*** ***(B136) No. 2 (+) — Chassis ground (–):***	Is the voltage 10 V or more?	Repair the poor contact of ECM connector.	Go to step **2**.

	Step	Check	Yes	No
2	**CHECK HARNESS BETWEEN ECM AND MAIN FUSE BOX CONNECTOR.** 1) Disconnect the connector from ECM. 2) Measure the resistance between ECM and chassis ground. ***Connector & terminal*** ***(B136) No. 2 — Chassis ground:***	Is the resistance 1 MΩ or more?	Go to step **3**.	Repair the ground short circuit of harness between ECM and battery terminal.
3	**CHECK M/B FUSE NO. 12.**	Is the fuse blown out?	Replace the fuse.	Repair the harness and connector. NOTE: In this case, repair the following item: • Open circuit in harness between ECM and battery • Poor contact of ECM connector • Poor contact of battery terminal

CQ:DTC P1602 CONTROL MODULE PROGRAMMING ERROR

DTC DETECTING CONDITION:

- Detected when two consecutive driving cycles with fault occur.
- GENERAL DESCRIPTION <Ref. to GD(H4DOTC)-179, DTC P1602 CONTROL MODULE PROGRAMMING ERROR, Diagnostic Trouble Code (DTC) Detecting Criteria.>

TROUBLE SYMPTOM:

- Engine keeps running at higher speed than specified idle speed.
- Engine keeps running at a lower speed than the specified idle speed.
- Engine stalls.

CAUTION:
After servicing or replacing faulty parts, perform Clear Memory Mode <Ref. to EN(H4DOTC)(diag)-55, OPERATION, Clear Memory Mode.>, and Inspection Mode <Ref. to EN(H4DOTC)(diag)-44, PROCEDURE, Inspection Mode.>.

WIRING DIAGRAM:

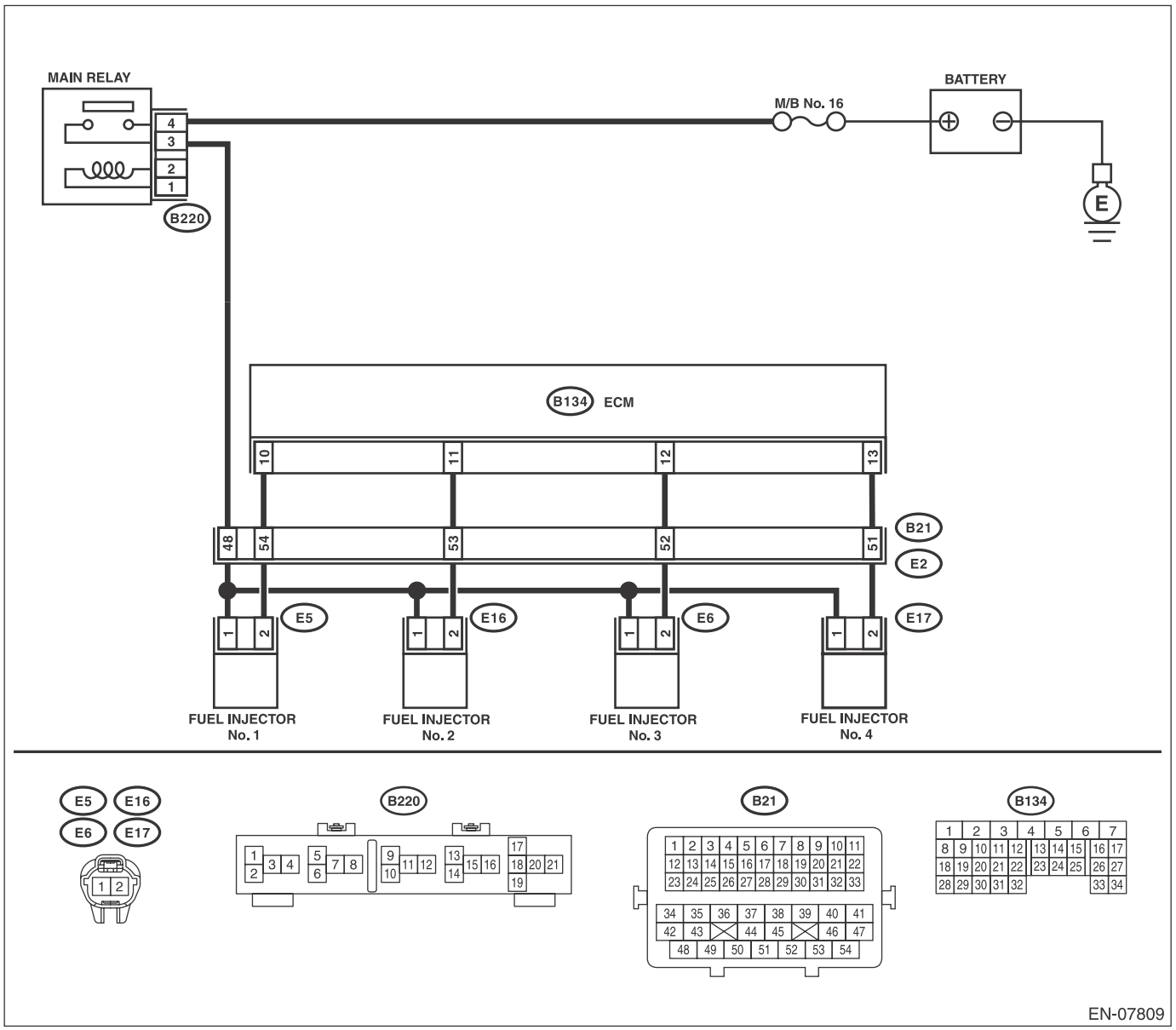

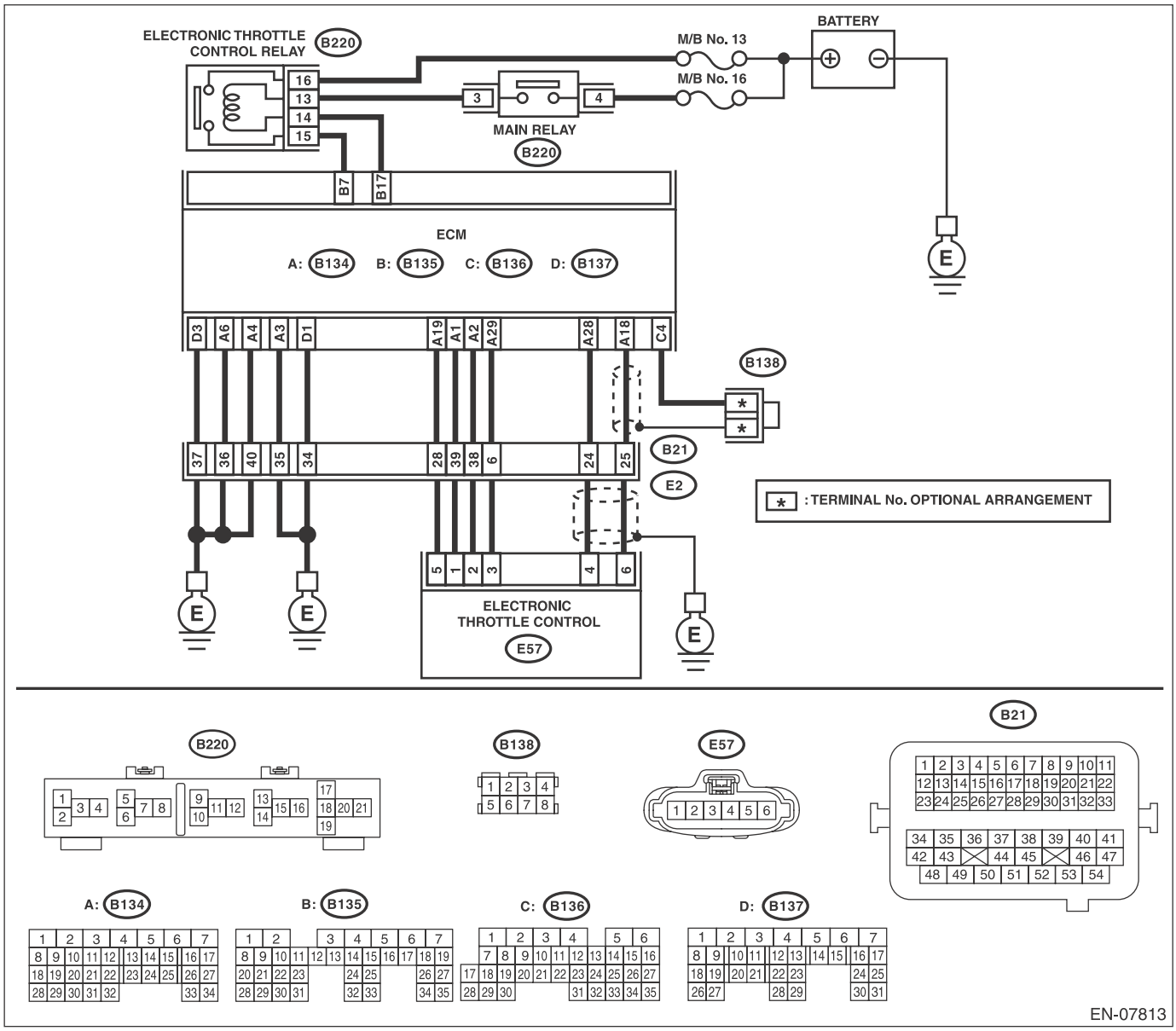

Step		Check	Yes	No
1	**CHECK FOR ANY OTHER DTC ON DISPLAY.**	Is any other DTC displayed?	Check the appropriate DTC using the “List of Diagnostic Trouble Code (DTC)”. <Ref. to EN(H4DOTC)(diag)-78, List of Diagnostic Trouble Code (DTC).>	Go to step **2**.
2	**CHECK ENGINE OIL.**	Is there a proper amount of engine oil?	Go to step **3**.	Replace engine oil. <Ref. to LU(H4SO)-12, REPLACEMENT, Engine Oil.>
3	**CHECK EXHAUST SYSTEM.**	Are there holes or loose bolts on exhaust system?	Repair the exhaust system.	Go to step **4**.

	Step	Check	Yes	No
4	**CHECK AIR INTAKE SYSTEM.**	Are there holes, loose bolts or disconnection of hose on air intake system?	Repair the air intake system.	Go to step **5**.
5	**CHECK FUEL PRESSURE.** **WARNING:** **Place "NO OPEN FLAMES" signs near the working area.** **CAUTION:** **Be careful not to spill fuel.** Measure the fuel pressure while disconnecting pressure regulator vacuum hose from intake manifold. <Ref. to ME(H4DOTC)-26, INSPECTION, Fuel Pressure.> **CAUTION:** **Release fuel pressure before removing the fuel pressure gauge.** NOTE: If fuel pressure does not increase, squeeze the fuel return hose 2 to 3 times, then measure fuel pressure again.	Is the measured value 284 — 314 kPa (2.9 — 3.2 kg/cm^2, 41 — 46 psi)?	Go to step **6**.	Repair the following item. Fuel pressure is too high: • Clogged fuel return line or bent hose Fuel pressure is too low: • Improper fuel pump discharge • Clogged fuel supply line
6	**CHECK FUEL PRESSURE.** After connecting the pressure regulator vacuum hose, measure fuel pressure. <Ref. to ME(H4DOTC)-26, INSPECTION, Fuel Pressure.> **CAUTION:** **Release fuel pressure before removing the fuel pressure gauge.** NOTE: • If fuel pressure does not increase, squeeze fuel return hose 2 to 3 times, then measure fuel pressure again. • If the measured value at this step is out of specification, check or replace pressure regulator and pressure regulator vacuum hose.	Is the measured value 230 — 260 kPa (2.35 — 2.65 kg/cm^2, 33 — 38 psi)?	Go to step **7**.	Repair the following item. Fuel pressure is too high: • Faulty pressure regulator • Clogged fuel return line or bent hose Fuel pressure is too low: • Faulty pressure regulator • Improper fuel pump discharge • Clogged fuel supply line
7	**CHECK ENGINE COOLANT TEMPERATURE SENSOR.** 1) Start the engine and warm up completely. 2) Read the data of engine coolant temperature sensor signal using Subaru Select Monitor or general scan tool. NOTE: • Subaru Select Monitor For detailed operation procedures, refer to "READ CURRENT DATA FOR ENGINE". <Ref. to EN(H4DOTC)(diag)-37, Subaru Select Monitor.> • General scan tool For detailed operation procedures, refer to the general scan tool operation manual.	Is the temperature 75°C (167°F) or more?	Go to step **8**.	Replace the engine coolant temperature sensor. <Ref. to FU(H4DOTC)-32, Engine Coolant Temperature Sensor.>

	Step	Check	Yes	No
8	**CHECK MASS AIR FLOW AND INTAKE AIR TEMPERATURE SENSOR.** 1) Start the engine and warm up engine until coolant temperature is higher than 70°C (158°F). 2) Place the shift lever in neutral position. 3) Turn the A/C switch to OFF. 4) Turn all the accessory switches to OFF. 5) Read the data of mass air flow and intake air temperature sensor signal using Subaru Select Monitor or general scan tool. NOTE: • Subaru Select Monitor For detailed operation procedures, refer to "READ CURRENT DATA FOR ENGINE". <Ref. to EN(H4DOTC)(diag)-37, Subaru Select Monitor.> • General scan tool For detailed operation procedures, refer to the general scan tool operation manual.	Is the measured value 2.0 — 5.0 g/s (0.26 — 0.66 lb/m)?	Go to step **9**.	Replace the mass air flow and intake air temperature sensor. <Ref. to FU(H4DOTC)-40, Mass Air Flow and Intake Air Temperature Sensor.>
9	**CHECK MASS AIR FLOW AND INTAKE AIR TEMPERATURE SENSOR.** 1) Start the engine and warm up engine until coolant temperature is higher than 70°C (158°F). 2) Place the shift lever in neutral position. 3) Turn the A/C switch to OFF. 4) Turn all the accessory switches to OFF. 5) Open the front hood. 6) Measure the ambient temperature. 7) Read the data of mass air flow and intake air temperature sensor signal using Subaru Select Monitor or general scan tool. NOTE: • Subaru Select Monitor For detailed operation procedures, refer to "READ CURRENT DATA FOR ENGINE". <Ref. to EN(H4DOTC)(diag)-37, Subaru Select Monitor.> • General scan tool For detailed operation procedures, refer to the general scan tool operation manual.	Subtract ambient temperature from intake air temperature. Is the obtained value –10 — 50°C (–18 — 90°F)?	Go to step **10**.	Check the mass air flow and intake air temperature sensor. <Ref. to FU(H4DOTC)-40, Mass Air Flow and Intake Air Temperature Sensor.>
10	**CHECK OUTPUT SIGNAL OF ECM.** 1) Turn the ignition switch to ON. 2) Measure the voltage between ECM and chassis ground on faulty cylinders. ***Connector & terminal*** ***#1 (B134) No. 10 (+) — Chassis ground (–):*** ***#2 (B134) No. 11 (+) — Chassis ground (–):*** ***#3 (B134) No. 12 (+) — Chassis ground (–):*** ***#4 (B134) No. 13 (+) — Chassis ground (–):***	Is the voltage 10 V or more?	Go to step **15**.	Go to step **11**.

	Step	Check	Yes	No
11	**CHECK HARNESS BETWEEN ECM AND FUEL INJECTOR CONNECTOR.** 1) Turn the ignition switch to OFF. 2) Disconnect the connector from fuel injector on faulty cylinders. 3) Measure the resistance between fuel injector connector and engine ground on faulty cylinders. ***Connector & terminal*** ***#1 (E5) No. 2 — Engine ground:*** ***#2 (E16) No. 2 — Engine ground:*** ***#3 (E6) No. 2 — Engine ground:*** ***#4 (E17) No. 2 — Engine ground:***	Is the resistance 1 MΩ or more?	Go to step **12.**	Repair the ground short circuit of harness between ECM and fuel injector connector.
12	**CHECK HARNESS BETWEEN ECM AND FUEL INJECTOR CONNECTOR.** Measure the resistance of harness between ECM and fuel injector connector on faulty cylinders. ***Connector & terminal*** ***#1 (B134) No. 10 — (E5) No. 2:*** ***#2 (B134) No. 11 — (E16) No. 2:*** ***#3 (B134) No. 12 — (E6) No. 2:*** ***#4 (B134) No. 13 — (E17) No. 2:***	Is the resistance less than 1 Ω?	Go to step **13.**	Repair the harness and connector. NOTE: In this case, repair the following item: • Open circuit in harness between ECM and fuel injector connector • Poor contact of coupling connector
13	**CHECK FUEL INJECTOR.** Measure the resistance between fuel injector terminals on faulty cylinder. ***Terminals*** ***No. 1 — No. 2:***	Is the resistance 5 — 20 Ω?	Go to step **14.**	Replace the faulty fuel injector. <Ref. to FU(H4DOTC)-43, Fuel Injector.>
14	**CHECK POWER SUPPLY LINE.** 1) Turn the ignition switch to ON. 2) Measure the voltage between fuel injector and engine ground on faulty cylinders. ***Connector & terminal*** ***#1 (E5) No. 1 (+) — Engine ground (–):*** ***#2 (E16) No. 1 (+) — Engine ground (–):*** ***#3 (E6) No. 1 (+) — Engine ground (–):*** ***#4 (E17) No. 1 (+) — Engine ground (–):***	Is the voltage 10 V or more?	Repair the poor contact of all connectors in fuel injector circuit.	Repair the harness and connector. NOTE: In this case, repair the following item: • Open circuit in harness between the main relay and fuel injector connector on faulty cylinders • Poor contact of coupling connector • Poor contact of main relay connector
15	**CHECK HARNESS BETWEEN ECM AND FUEL INJECTOR CONNECTOR.** 1) Turn the ignition switch to OFF. 2) Disconnect the connector from fuel injector on faulty cylinders. 3) Turn the ignition switch to ON. 4) Measure the voltage between ECM and chassis ground on faulty cylinders. ***Connector & terminal*** ***#1 (B134) No. 10 (+) — Chassis ground (–):*** ***#2 (B134) No. 11 (+) — Chassis ground (–):*** ***#3 (B134) No. 12 (+) — Chassis ground (–):*** ***#4 (B134) No. 13 (+) — Chassis ground (–):***	Is the voltage 10 V or more?	Repair the short circuit to power in harness between ECM and fuel injector connector.	Go to step **16.**

	Step	Check	Yes	No
16	**CHECK FUEL INJECTOR.** 1) Turn the ignition switch to OFF. 2) Measure the resistance between fuel injector terminals on faulty cylinder. ***Terminals*** ***No. 1 — No. 2:***	Is the resistance less than 1 Ω?	Replace the faulty fuel injector. <Ref. to FU(H4DOTC)-43, Fuel Injector.>	Go to step **17**.
17	**CHECK INSTALLATION OF CAMSHAFT POSITION SENSOR/CRANKSHAFT POSITION SENSOR.**	Is the camshaft position sensor or crankshaft position sensor loosely installed?	Tighten the camshaft position sensor or crankshaft position sensor.	Go to step **18**.
18	**CHECK CRANK SPROCKET.** Remove the timing belt cover. <Ref. to ME(H4DOTC)-46, REMOVAL, Timing Belt Cover.>	Is the crank sprocket rusted or does it have broken teeth?	Replace the crank sprocket. <Ref. to ME(H4DOTC)-61, Crank Sprocket.>	Go to step **19**.
19	**CHECK INSTALLATION CONDITION OF TIMING BELT.** Turn the crankshaft using ST, and align the alignment mark on crank sprocket with alignment mark on cylinder block. ST 499987500 CRANKSHAFT SOCKET	Is the timing belt dislocated from its proper position?	Repair the installation condition of timing belt. <Ref. to ME(H4DOTC)-51, Timing Belt.>	Go to step **20**.
20	**CHECK ELECTRONIC THROTTLE CONTROL RELAY.** 1) Turn the ignition switch to OFF. 2) Remove the electronic throttle control relay. 3) Connect the battery to terminals No. 13 and No. 14 of electronic throttle control relay. 4) Measure the resistance between electronic throttle control relay terminals. ***Terminals*** ***No. 16 — No. 15:***	Is the resistance less than 1 Ω?	Go to step **21**.	Replace the electronic throttle control relay. <Ref. to FU(H4DOTC)-62, Electronic Throttle Control Relay.>
21	**CHECK POWER SUPPLY OF ELECTRONIC THROTTLE CONTROL RELAY.** Measure the voltage between electronic throttle control relay connector and chassis ground. ***Connector & terminal*** ***(B220) No. 16 (+) — Chassis ground (–):***	Is the voltage 10 V or more?	Go to step **22**.	Repair the open or ground short circuit of power supply circuit.
22	**CHECK HARNESS BETWEEN ECM AND ELECTRONIC THROTTLE CONTROL RELAY CONNECTOR.** 1) Disconnect the connector from ECM. 2) Turn the ignition switch to ON. 3) Measure the voltage between electronic throttle control relay connector and chassis ground. ***Connector & terminal*** ***(B220) No. 14 (+) — Chassis ground (–):***	Is the voltage 10 V or more?	Repair the short circuit to power in the harness between ECM and electronic throttle control relay connector.	Go to step **23**.
23	**CHECK HARNESS BETWEEN ECM AND ELECTRONIC THROTTLE CONTROL RELAY CONNECTOR.** 1) Turn the ignition switch to OFF. 2) Measure the resistance between electronic throttle control relay connector and chassis ground. ***Connector & terminal*** ***(B220) No. 14 — Chassis ground:*** ***(B220) No. 15 — Chassis ground:***	Is the resistance 1 MΩ or more?	Go to step **24**.	Repair the short circuit in harness to ground between ECM and electronic throttle control relay connector.

	Step	Check	Yes	No
24	**CHECK HARNESS BETWEEN ECM AND ELECTRONIC THROTTLE CONTROL RELAY CONNECTOR.** Measure the resistance between ECM and electronic throttle control relay connector. ***Connector & terminal*** ***(B135) No. 17 — (B220) No. 14:*** ***(B135) No. 7 — (B220) No. 15:***	Is the resistance less than 1 Ω?	Go to step **25**.	Repair the open circuit in harness between ECM and electronic throttle control relay connector.
25	**CHECK HARNESS BETWEEN ECM AND ELECTRONIC THROTTLE CONTROL CONNECTOR.** 1) Turn the ignition switch to OFF. 2) Disconnect the connectors from the ECM and electronic throttle control. 3) Measure the resistance between ECM and chassis ground. ***Connector & terminal*** ***(B134) No. 19 — Chassis ground:*** ***(B134) No. 18 — Chassis ground:*** ***(B134) No. 18 — (B136) No. 4:*** ***(B134) No. 28 — Chassis ground:***	Is the resistance 1 MΩ or more?	Go to step **26**.	Repair the ground short circuit of harness between ECM and electronic throttle control connector.
26	**CHECK SHORT CIRCUIT INSIDE THE ECM.** 1) Connect the connector to ECM. 2) Measure the resistance between electronic throttle control connector and engine ground. ***Connector & terminal*** ***(E57) No. 6 — Engine ground:*** ***(E57) No. 4 — Engine ground:***	Is the resistance 1 MΩ or more?	Go to step **27**.	Repair the ground short circuit of harness between ECM and electronic throttle control connector. Replace the ECM if defective. <Ref. to FU(H4DOTC)-57, Engine Control Module (ECM).>
27	**CHECK HARNESS BETWEEN ECM AND ELECTRONIC THROTTLE CONTROL CONNECTOR.** 1) Disconnect the connector from ECM. 2) Measure the resistance of harness between ECM and electronic throttle control connector. ***Connector & terminal*** ***(B134) No. 18 — (E57) No. 6:*** ***(B134) No. 28 — (E57) No. 4:*** ***(B134) No. 29 — (E57) No. 3:***	Is the resistance less than 1 Ω?	Go to step **28**.	Repair the harness and connector. NOTE: In this case, repair the following item: • Open circuit in harness between ECM and electronic throttle control connector • Poor contact of coupling connector
28	**CHECK HARNESS BETWEEN ECM AND ELECTRONIC THROTTLE CONTROL CONNECTOR.** 1) Connect the connector to ECM. 2) Measure the resistance between electronic throttle control connector and engine ground. ***Connector & terminal*** ***(E57) No. 3 — Engine ground:***	Is the resistance less than 5 Ω?	Go to step **29**.	Repair the harness and connector. NOTE: In this case, repair the following item: • Open circuit of harness between ECM and engine ground • Poor contact of ECM connector • Poor contact of coupling connector

	Step	Check	Yes	No
29	**CHECK HARNESS BETWEEN ECM AND ELECTRONIC THROTTLE CONTROL CONNECTOR.** 1) Turn the ignition switch to ON. 2) Measure the voltage between electronic throttle control connector and engine ground. ***Connector & terminal*** ***(E57) No. 6 (+) — Engine ground (–):*** ***(E57) No. 4 (+) — Engine ground (–):***	Is the voltage 5 V or more?	Repair the short circuit of harness to power supply between ECM and electronic throttle control connector.	Go to step **30**.
30	**CHECK HARNESS BETWEEN ECM AND ELECTRONIC THROTTLE CONTROL CONNECTOR.** 1) Turn the ignition switch to OFF. 2) Disconnect the connector from ECM. 3) Measure the resistance between ECM connectors. ***Connector & terminal*** ***(B134) No. 19 — (B134) No. 18:*** ***(B134) No. 19 — (B134) No. 28:***	Is the resistance 1 MΩ or more?	Go to step **31**.	Repair the short circuit of harness to power supply between ECM and electronic throttle control connector.
31	**CHECK SENSOR OUTPUT.** 1) Connect all connectors. 2) Turn the ignition switch to ON. 3) Read the data of main throttle sensor signal using Subaru Select Monitor. NOTE: For detailed operation procedures, refer to "READ CURRENT DATA FOR ENGINE". <Ref. to EN(H4DOTC)(diag)-37, Subaru Select Monitor.>	Is the voltage 0.81 — 0.87 V?	Go to step **32**.	Repair the poor contact of electronic throttle control connector. Replace the electronic throttle control if defective. <Ref. to FU(H4DOTC)-15, Throttle Body.>
32	**CHECK SENSOR OUTPUT.** Read the data of sub throttle sensor signal using Subaru Select Monitor. NOTE: Subaru Select Monitor For detailed operation procedures, refer to "READ CURRENT DATA FOR ENGINE". <Ref. to EN(H4DOTC)(diag)-37, Subaru Select Monitor.>	Is the voltage 1.64 — 1.70 V?	Go to step **33**.	Repair the poor contact of electronic throttle control connector. Replace the electronic throttle control if defective. <Ref. to FU(H4DOTC)-15, Throttle Body.>
33	**CHECK HARNESS BETWEEN ECM AND ELECTRONIC THROTTLE CONTROL MOTOR.** 1) Turn the ignition switch to OFF. 2) Disconnect the connectors from the ECM and electronic throttle control. 3) Measure the resistance between ECM and electronic throttle control connector. ***Connector & terminal*** ***(B134) No. 2 — (E57) No. 2:*** ***(B134) No. 1 — (E57) No. 1:***	Is the resistance less than 1 Ω?	Go to step **34**.	Repair the harness and connector. NOTE: In this case, repair the following item: • Open circuit in harness between ECM and electronic throttle control connector • Poor contact of coupling connector

	Step	Check	Yes	No
34	**CHECK HARNESS BETWEEN ECM AND ELECTRONIC THROTTLE CONTROL MOTOR.** 1) Connect the connector to ECM. 2) Turn the ignition switch to ON. 3) Measure the voltage between electronic throttle control connector and engine ground. ***Connector & terminal*** ***(E57) No. 2 (+) — Engine ground (–):*** ***(E57) No. 1 (+) — Engine ground (–):***	Is the voltage 5 V or more?	Repair the short circuit of harness to power supply between ECM and electronic throttle control connector.	Go to step **35**.
35	**CHECK HARNESS BETWEEN ECM AND ELECTRONIC THROTTLE CONTROL MOTOR.** 1) Turn the ignition switch to OFF. 2) Disconnect the connector from ECM. 3) Measure the resistance between electronic throttle control connector and engine ground. ***Connector & terminal*** ***(E57) No. 2 — Engine ground:*** ***(E57) No. 1 — Engine ground:***	Is the resistance 1 MΩ or more?	Go to step **36**.	Repair the ground short circuit of harness between ECM and electronic throttle control connector.
36	**CHECK ELECTRONIC THROTTLE CONTROL MOTOR HARNESS.** Measure the resistance between electronic throttle control connectors. ***Connector & terminal*** ***(E57) No. 2 — (E57) No. 1:***	Is the resistance 1 MΩ or more?	Go to step **37**.	Repair the short circuit of harness between ECM and electronic throttle control connector.
37	**CHECK ELECTRONIC THROTTLE CONTROL GROUND CIRCUIT.** Measure the resistance between ECM and chassis ground. ***Connector & terminal*** ***(B134) No. 3 — Chassis ground:*** ***(B134) No. 4 — Chassis ground:*** ***(B134) No. 6 — Chassis ground:*** ***(B137) No. 1 — Chassis ground:*** ***(B137) No. 3 — Chassis ground:***	Is the resistance less than 5 Ω?	Go to step **38**.	Repair the harness and connector. NOTE: In this case, repair the following item: • Open circuit of harness between ECM and engine ground • Poor contact of coupling connector
38	**CHECK ELECTRONIC THROTTLE CONTROL.** Measure the resistance between electronic throttle control terminals. ***Terminals*** ***No. 1 — No. 2:***	Is the resistance 50 Ω or less?	Go to step **39**.	Replace the electronic throttle control. <Ref. to FU(H4DOTC)-15, Throttle Body.>
39	**CHECK ELECTRONIC THROTTLE CONTROL.** Move the throttle valve to the fully open and fully closed positions with fingers. Check that the valve returns to the specified position when releasing fingers.	Does the valve return to the specified position? Standard value: 3 mm (0.12 in) from fully closed position	Repair the poor contact of ECM connector.	Replace the electronic throttle control. <Ref. to FU(H4DOTC)-15, Throttle Body.>

CR:DTC P2004 INTAKE MANIFOLD RUNNER CONTROL STUCK OPEN (BANK 1)

DTC DETECTING CONDITION:

- Immediately at fault recognition
- GENERAL DESCRIPTION <Ref. to GD(H4DOTC)-181, DTC P2004 INTAKE MANIFOLD RUNNER CONTROL STUCK OPEN (BANK 1), Diagnostic Trouble Code (DTC) Detecting Criteria.>

CAUTION:

After servicing or replacing faulty parts, perform Clear Memory Mode <Ref. to EN(H4DOTC)(diag)-55, OPERATION, Clear Memory Mode.>, and Inspection Mode <Ref. to EN(H4DOTC)(diag)-44, PROCEDURE, Inspection Mode.>.

	Step	Check	Yes	No
1	**CHECK FOR ANY OTHER DTC ON DISPLAY.**	Is any other DTC displayed?	Check the appropriate DTC using the "List of Diagnostic Trouble Code (DTC)". <Ref. to EN(H4DOTC)(diag)-78, List of Diagnostic Trouble Code (DTC).>	Go to step **2**.
2	**CHECK TUMBLE GENERATOR VALVE RH.** 1) Remove the tumble generator valve assembly RH. 2) Check the tumble generator valve body.	Is there any dirt or clogging with foreign objects in the tumble generator valve?	Clean the tumble generator valve.	Replace the tumble generator valve assembly RH. <Ref. to FU(H4DOTC)-46, Tumble Generator Valve Assembly.>

CS:DTC P2005 INTAKE MANIFOLD RUNNER CONTROL STUCK OPEN (BANK 2)

DTC DETECTING CONDITION:

- Immediately at fault recognition
- GENERAL DESCRIPTION <Ref. to GD(H4DOTC)-182, DTC P2005 INTAKE MANIFOLD RUNNER CONTROL STUCK OPEN (BANK 2), Diagnostic Trouble Code (DTC) Detecting Criteria.>

CAUTION:
After servicing or replacing faulty parts, perform Clear Memory Mode <Ref. to EN(H4DOTC)(diag)-55, OPERATION, Clear Memory Mode.>, and Inspection Mode <Ref. to EN(H4DOTC)(diag)-44, PROCEDURE, Inspection Mode.>.

	Step	Check	Yes	No
1	**CHECK FOR ANY OTHER DTC ON DISPLAY.**	Is any other DTC displayed?	Check the appropriate DTC using the "List of Diagnostic Trouble Code (DTC)". <Ref. to EN(H4DOTC)(diag)-78, List of Diagnostic Trouble Code (DTC).>	Go to step **2**.
2	**CHECK TUMBLE GENERATOR VALVE LH.** 1) Remove the tumble generator valve assembly LH. 2) Check the tumble generator valve body.	Is there any dirt or clogging with foreign objects in the tumble generator valve?	Clean the tumble generator valve.	Replace the tumble generator valve assembly LH. <Ref. to FU(H4DOTC)-46, Tumble Generator Valve Assembly.>

CT:DTC P2006 INTAKE MANIFOLD RUNNER CONTROL STUCK CLOSED (BANK 1)

DTC DETECTING CONDITION:

- Immediately at fault recognition
- GENERAL DESCRIPTION <Ref. to GD(H4DOTC)-183, DTC P2006 INTAKE MANIFOLD RUNNER CONTROL STUCK CLOSED (BANK 1), Diagnostic Trouble Code (DTC) Detecting Criteria.>

CAUTION:

After servicing or replacing faulty parts, perform Clear Memory Mode <Ref. to EN(H4DOTC)(diag)-55, OPERATION, Clear Memory Mode.>, and Inspection Mode <Ref. to EN(H4DOTC)(diag)-44, PROCEDURE, Inspection Mode.>.

	Step	Check	Yes	No
1	**CHECK FOR ANY OTHER DTC ON DISPLAY.**	Is any other DTC displayed?	Check the appropriate DTC using the "List of Diagnostic Trouble Code (DTC)". <Ref. to EN(H4DOTC)(diag)-78, List of Diagnostic Trouble Code (DTC).>	Go to step **2**.
2	**CHECK TUMBLE GENERATOR VALVE RH.** 1) Remove the tumble generator valve assembly RH. 2) Check the tumble generator valve body.	Is there any dirt or clogging with foreign objects in the tumble generator valve?	Clean the tumble generator valve.	Replace the tumble generator valve assembly RH. <Ref. to FU(H4DOTC)-46, Tumble Generator Valve Assembly.>

CU:DTC P2007 INTAKE MANIFOLD RUNNER CONTROL STUCK CLOSED (BANK 2)

DTC DETECTING CONDITION:

- Immediately at fault recognition
- GENERAL DESCRIPTION <Ref. to GD(H4DOTC)-184, DTC P2007 INTAKE MANIFOLD RUNNER CONTROL STUCK CLOSED (BANK 2), Diagnostic Trouble Code (DTC) Detecting Criteria.>

CAUTION:

After servicing or replacing faulty parts, perform Clear Memory Mode <Ref. to EN(H4DOTC)(diag)-55, OPERATION, Clear Memory Mode.>, and Inspection Mode <Ref. to EN(H4DOTC)(diag)-44, PROCEDURE, Inspection Mode.>.

	Step	Check	Yes	No
1	**CHECK FOR ANY OTHER DTC ON DISPLAY.**	Is any other DTC displayed?	Check the appropriate DTC using the "List of Diagnostic Trouble Code (DTC)". <Ref. to EN(H4DOTC)(diag)-78, List of Diagnostic Trouble Code (DTC).>	Go to step **2**.
2	**CHECK TUMBLE GENERATOR VALVE LH.** 1) Remove the tumble generator valve assembly LH. 2) Check the tumble generator valve body.	Is there any dirt or clogging with foreign objects in the tumble generator valve?	Clean the tumble generator valve.	Replace the tumble generator valve assembly LH. <Ref. to FU(H4DOTC)-46, Tumble Generator Valve Assembly.>

CV:DTC P2008 INTAKE MANIFOLD RUNNER CONTROL CIRCUIT / OPEN (BANK 1)

DTC DETECTING CONDITION:

- Immediately at fault recognition
- GENERAL DESCRIPTION <Ref. to GD(H4DOTC)-185, DTC P2008 INTAKE MANIFOLD RUNNER CONTROL CIRCUIT / OPEN (BANK 1), Diagnostic Trouble Code (DTC) Detecting Criteria.>

CAUTION:

After servicing or replacing faulty parts, perform Clear Memory Mode <Ref. to EN(H4DOTC)(diag)-55, OPERATION, Clear Memory Mode.>, and Inspection Mode <Ref. to EN(H4DOTC)(diag)-44, PROCEDURE, Inspection Mode.>.

WIRING DIAGRAM:

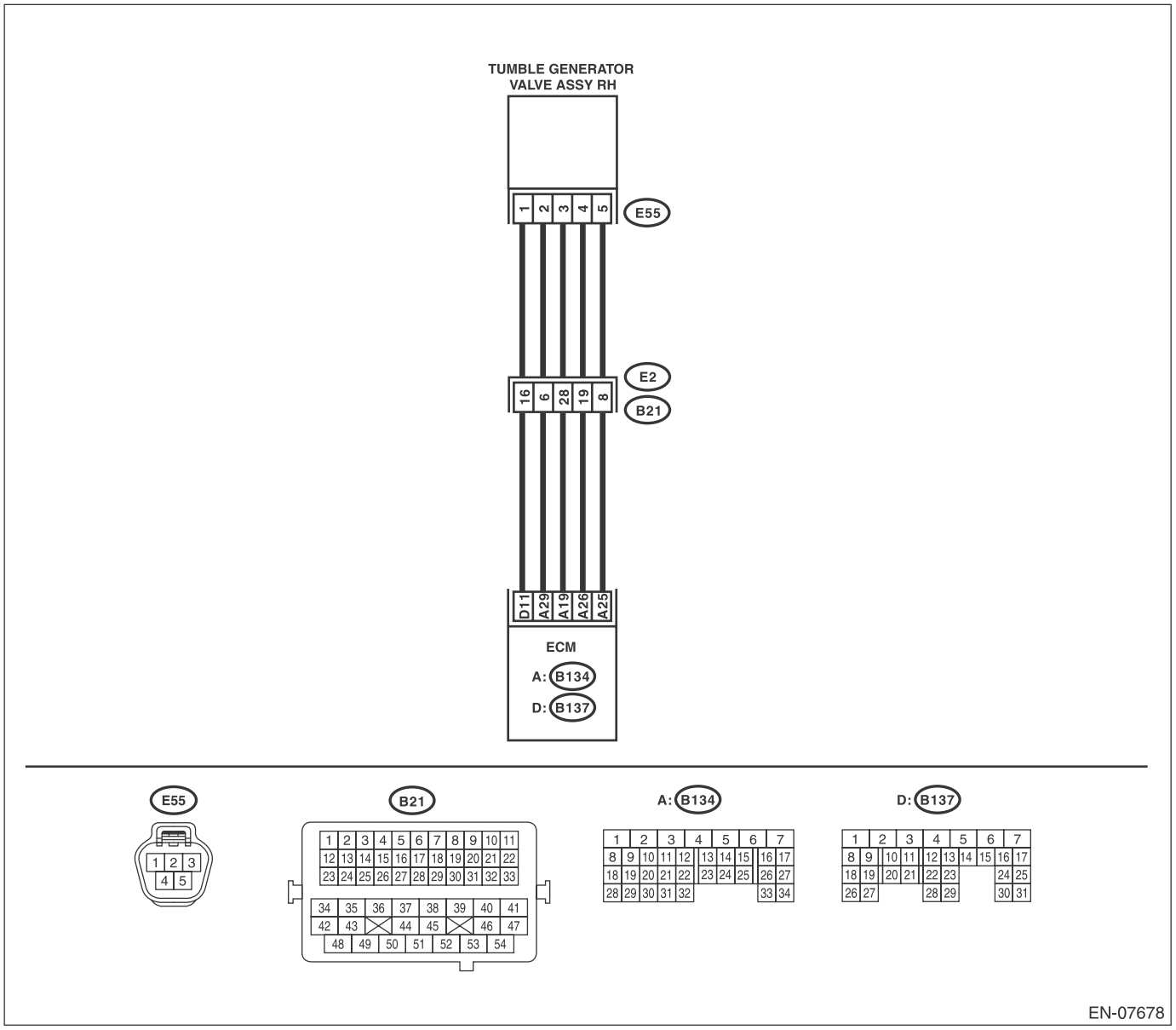

	Step	Check	Yes	No
1	**CHECK HARNESS BETWEEN ECM AND TUMBLE GENERATOR VALVE ASSEMBLY RH CONNECTOR.** 1) Turn the ignition switch to OFF. 2) Disconnect the connectors from the ECM and tumble generator valve assembly RH. 3) Measure the resistance of harness between ECM and tumble generator valve assembly RH. ***Connector & terminal*** ***(B134) No. 25 — (E55) No. 5:*** ***(B134) No. 26 — (E55) No. 4:***	Is the resistance less than 1 Ω?	Go to step **2**.	Repair the harness and connector. NOTE: In this case, repair the following item: • Open circuit in harness between ECM and tumble generator valve assembly RH connector • Poor contact of coupling connector
2	**CHECK HARNESS BETWEEN ECM AND TUMBLE GENERATOR VALVE ASSEMBLY RH CONNECTOR.** Measure the resistance between ECM and chassis ground. ***Connector & terminal*** ***(B134) No. 25 — Chassis ground:*** ***(B134) No. 26 — Chassis ground:***	Is the resistance 1 MΩ or more?	Go to step **3**.	Repair the short circuit to ground in harness between ECM and tumble generator valve assembly RH connector.
3	**CHECK FOR POOR CONTACT.** Check for poor contact of tumble generator valve assembly RH connector.	Is there poor contact of the tumble generator valve assembly RH connector?	Repair the poor contact of tumble generator valve assembly RH connector.	Replace the tumble generator valve assembly RH. <Ref. to FU(H4DOTC)-46, Tumble Generator Valve Assembly.>

CW:DTC P2009 INTAKE MANIFOLD RUNNER CONTROL CIRCUIT LOW (BANK 1)

DTC DETECTING CONDITION:

- Immediately at fault recognition
- GENERAL DESCRIPTION <Ref. to GD(H4DOTC)-186, DTC P2009 INTAKE MANIFOLD RUNNER CONTROL CIRCUIT LOW (BANK 1), Diagnostic Trouble Code (DTC) Detecting Criteria.>

CAUTION:
After servicing or replacing faulty parts, perform Clear Memory Mode <Ref. to EN(H4DOTC)(diag)-55, OPERATION, Clear Memory Mode.>, and Inspection Mode <Ref. to EN(H4DOTC)(diag)-44, PROCEDURE, Inspection Mode.>.

WIRING DIAGRAM:

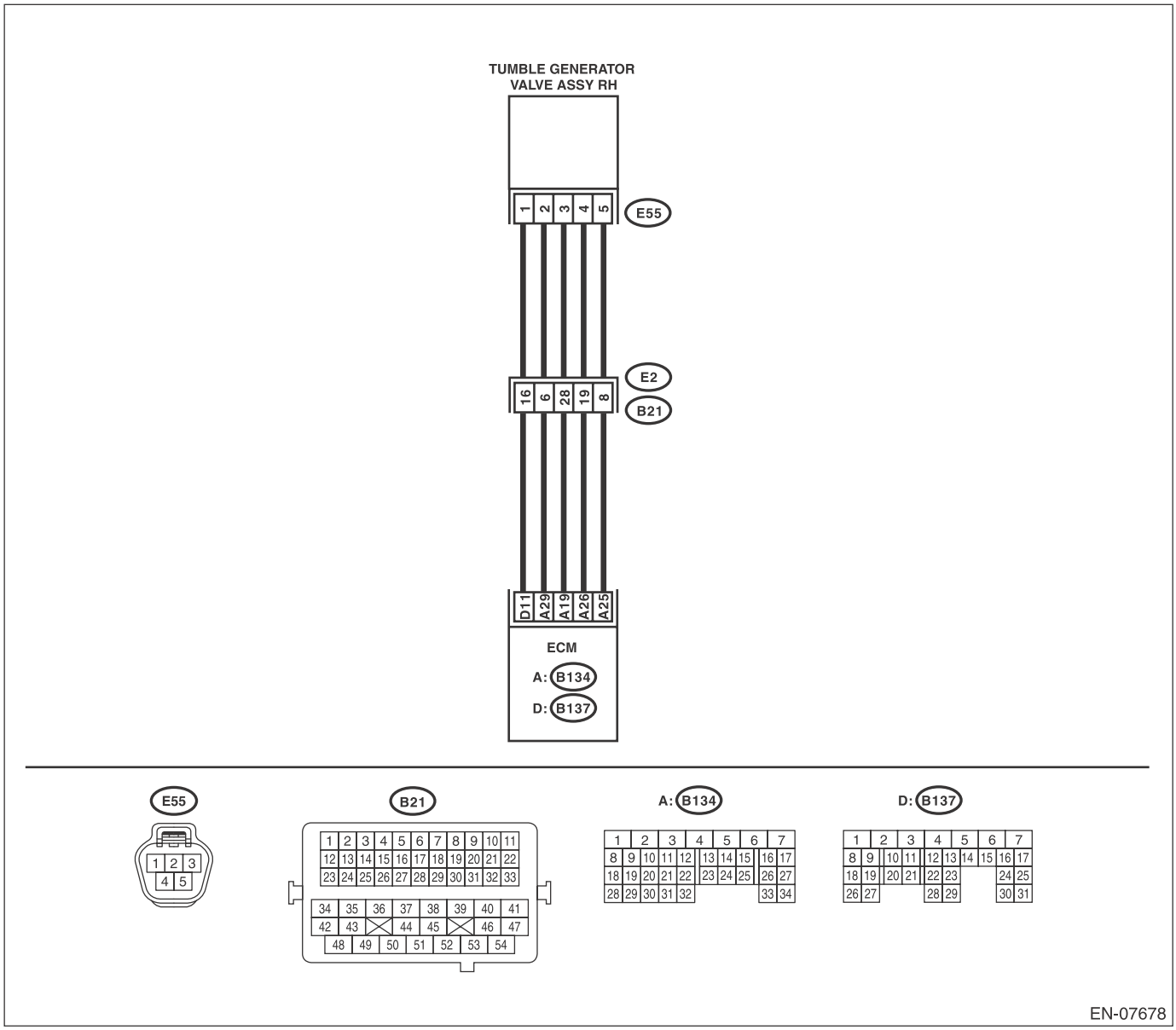

	Step	Check	Yes	No
1	**CHECK HARNESS BETWEEN ECM AND TUMBLE GENERATOR VALVE ASSEMBLY RH CONNECTOR.** 1) Turn the ignition switch to OFF. 2) Disconnect the connector from ECM. 3) Measure the voltage between ECM and chassis ground. ***Connector & terminal*** ***(B134) No. 25 (+) — Chassis ground (–):*** ***(B134) No. 26 (+) — Chassis ground (–):***	Is the voltage 5 V or more?	Repair the short circuit to power in the harness between ECM and tumble generator valve assembly RH.	Replace the tumble generator valve assembly RH. <Ref. to FU(H4DOTC)-46, Tumble Generator Valve Assembly.>

CX:DTC P2011 INTAKE MANIFOLD RUNNER CONTROL CIRCUIT / OPEN (BANK 2)

DTC DETECTING CONDITION:

- Immediately at fault recognition
- GENERAL DESCRIPTION <Ref. to GD(H4DOTC)-187, DTC P2011 INTAKE MANIFOLD RUNNER CONTROL CIRCUIT / OPEN (BANK 2), Diagnostic Trouble Code (DTC) Detecting Criteria.>

CAUTION:

After servicing or replacing faulty parts, perform Clear Memory Mode <Ref. to EN(H4DOTC)(diag)-55, OPERATION, Clear Memory Mode.>, and Inspection Mode <Ref. to EN(H4DOTC)(diag)-44, PROCEDURE, Inspection Mode.>.

WIRING DIAGRAM:

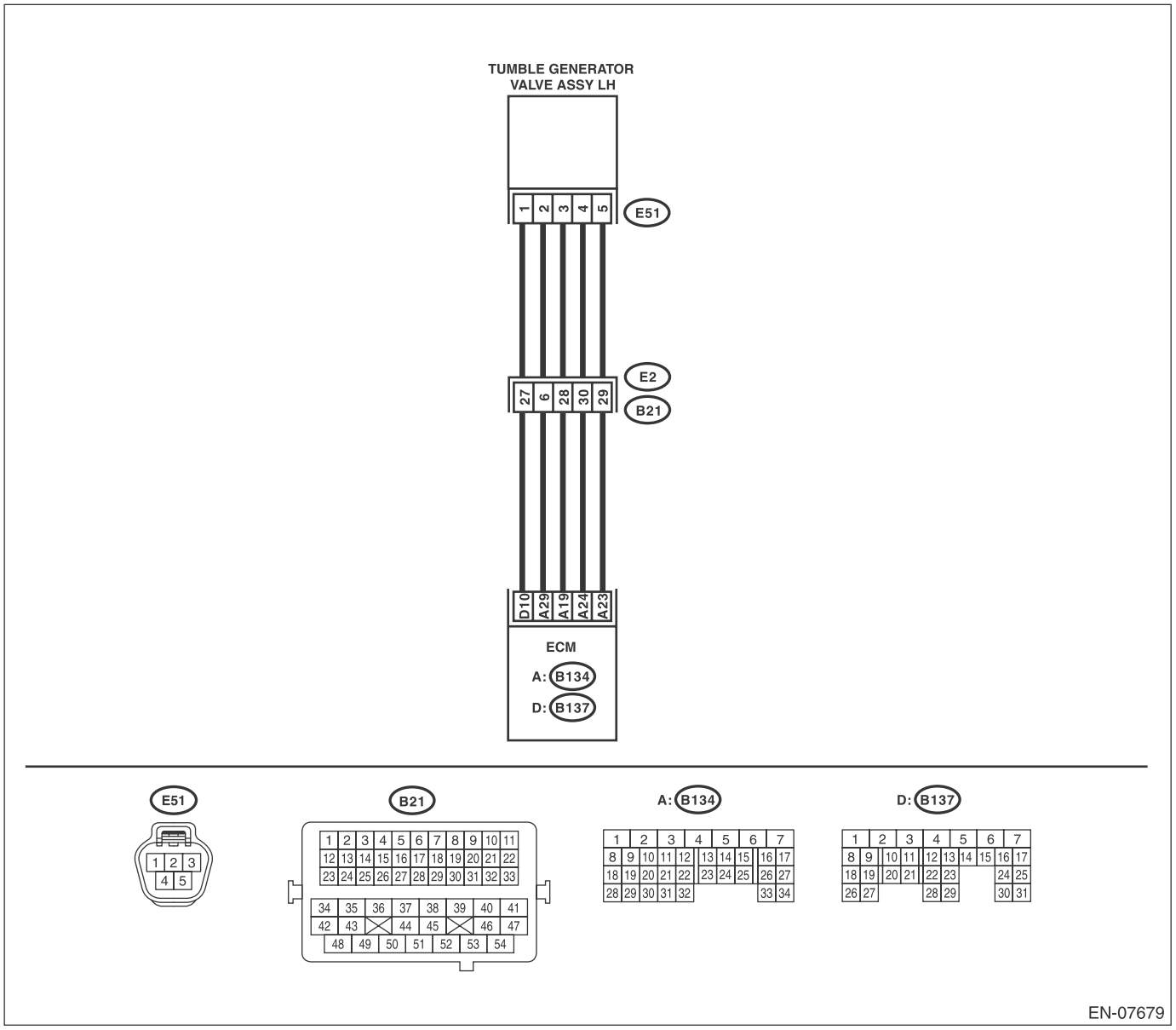

	Step	Check	Yes	No
1	**CHECK HARNESS BETWEEN ECM AND TUMBLE GENERATOR VALVE ASSEMBLY LH CONNECTOR.** 1) Turn the ignition switch to OFF. 2) Disconnect the connectors from ECM and tumble generator valve assembly LH. 3) Measure the resistance of harness between ECM and tumble generator valve assembly LH. ***Connector & terminal*** ***(B134) No. 23 — (E51) No. 5:*** ***(B134) No. 24 — (E51) No. 4:***	Is the resistance less than 1 Ω?	Go to step **2**.	Repair the harness and connector. NOTE: In this case, repair the following item: • Open circuit in harness between ECM and tumble generator valve assembly LH connector • Poor contact of coupling connector
2	**CHECK HARNESS BETWEEN ECM AND TUMBLE GENERATOR VALVE ASSEMBLY LH CONNECTOR.** Measure the resistance between ECM and chassis ground. ***Connector & terminal*** ***(B134) No. 23 — Chassis ground:*** ***(B134) No. 24 — Chassis ground:***	Is the resistance 1 MΩ or more?	Go to step **3**.	Repair the short circuit to ground in harness between ECM and tumble generator valve assembly LH connector.
3	**CHECK FOR POOR CONTACT.** Check for poor contact of tumble generator valve assembly LH connector.	Is there poor contact of the tumble generator valve assembly LH connector?	Repair the poor contact of tumble generator valve assembly LH connector.	Replace the tumble generator valve assembly LH. <Ref. to FU(H4DOTC)-46, Tumble Generator Valve Assembly.>

CY:DTC P2012 INTAKE MANIFOLD RUNNER CONTROL CIRCUIT LOW (BANK 2)

DTC DETECTING CONDITION:

- Immediately at fault recognition
- GENERAL DESCRIPTION <Ref. to GD(H4DOTC)-188, DTC P2012 INTAKE MANIFOLD RUNNER CONTROL CIRCUIT LOW (BANK 2), Diagnostic Trouble Code (DTC) Detecting Criteria.>

CAUTION:

After servicing or replacing faulty parts, perform Clear Memory Mode <Ref. to EN(H4DOTC)(diag)-55, OPERATION, Clear Memory Mode.>, and Inspection Mode <Ref. to EN(H4DOTC)(diag)-44, PROCEDURE, Inspection Mode.>.

WIRING DIAGRAM:

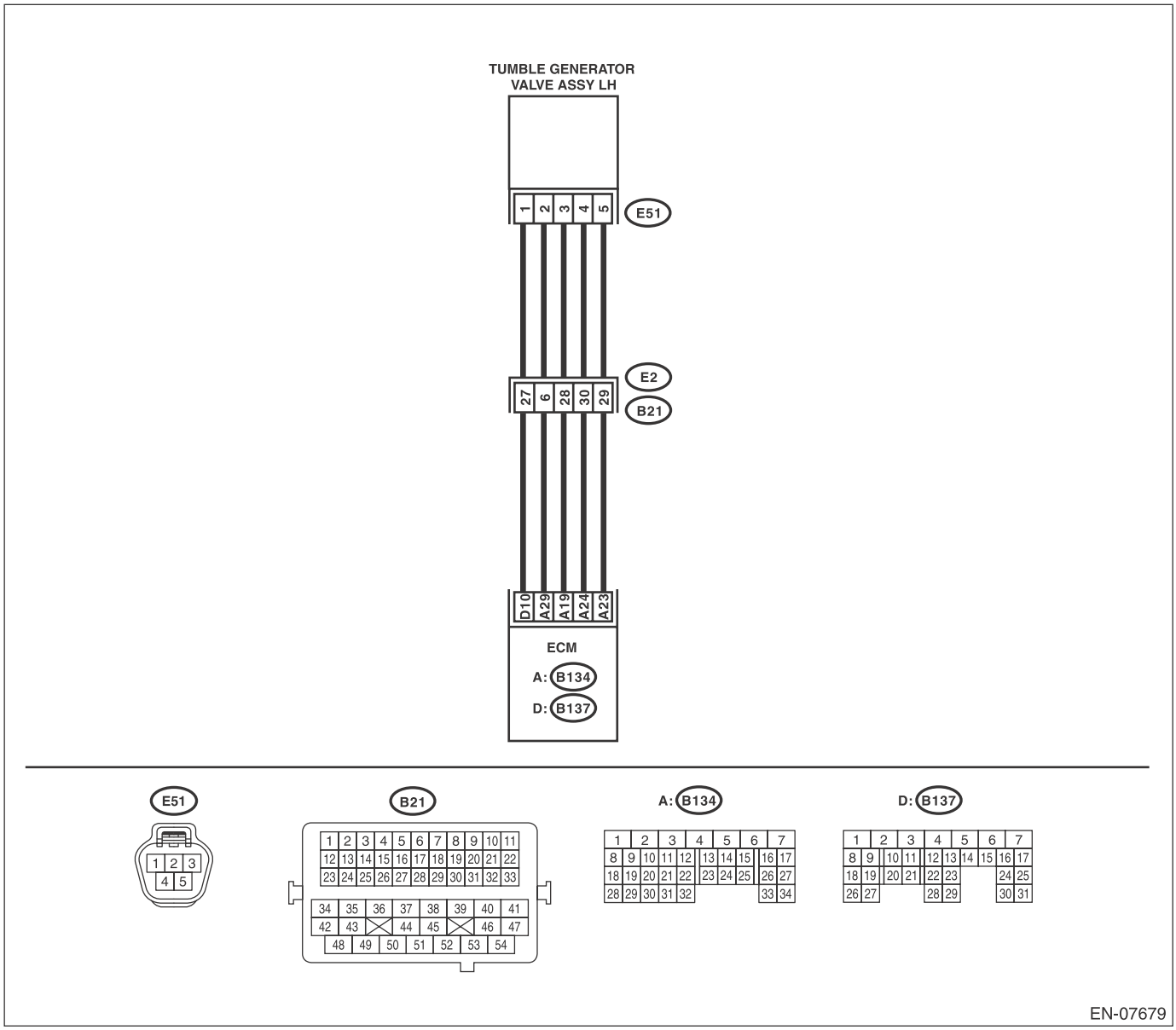

	Step	Check	Yes	No
1	**CHECK HARNESS BETWEEN ECM AND TUMBLE GENERATOR VALVE ASSEMBLY LH CONNECTOR.** 1) Turn the ignition switch to OFF. 2) Disconnect the connector from ECM. 3) Measure the voltage between ECM and chassis ground. ***Connector & terminal*** ***(B134) No. 23 (+) — Chassis ground (–):*** ***(B134) No. 24 (+) — Chassis ground (–):***	Is the voltage 5 V or more?	Repair the short circuit to power in the harness between ECM and tumble generator valve assembly LH.	Replace the tumble generator valve assembly LH. <Ref. to FU(H4DOTC)-46, Tumble Generator Valve Assembly.>

CZ:DTC P2016 INTAKE MANIFOLD RUNNER POSITION SENSOR / SWITCH CIRCUIT LOW (BANK 1)

DTC DETECTING CONDITION:

- Immediately at fault recognition
- GENERAL DESCRIPTION <Ref. to GD(H4DOTC)-189, DTC P2016 INTAKE MANIFOLD RUNNER POSITION SENSOR / SWITCH CIRCUIT LOW (BANK 1), Diagnostic Trouble Code (DTC) Detecting Criteria.>

TROUBLE SYMPTOM:

- Improper idling
- Engine stalls.
- Poor driving performance

CAUTION:

After servicing or replacing faulty parts, perform Clear Memory Mode <Ref. to EN(H4DOTC)(diag)-55, OPERATION, Clear Memory Mode.>, and Inspection Mode <Ref. to EN(H4DOTC)(diag)-44, PROCEDURE, Inspection Mode.>.

WIRING DIAGRAM:

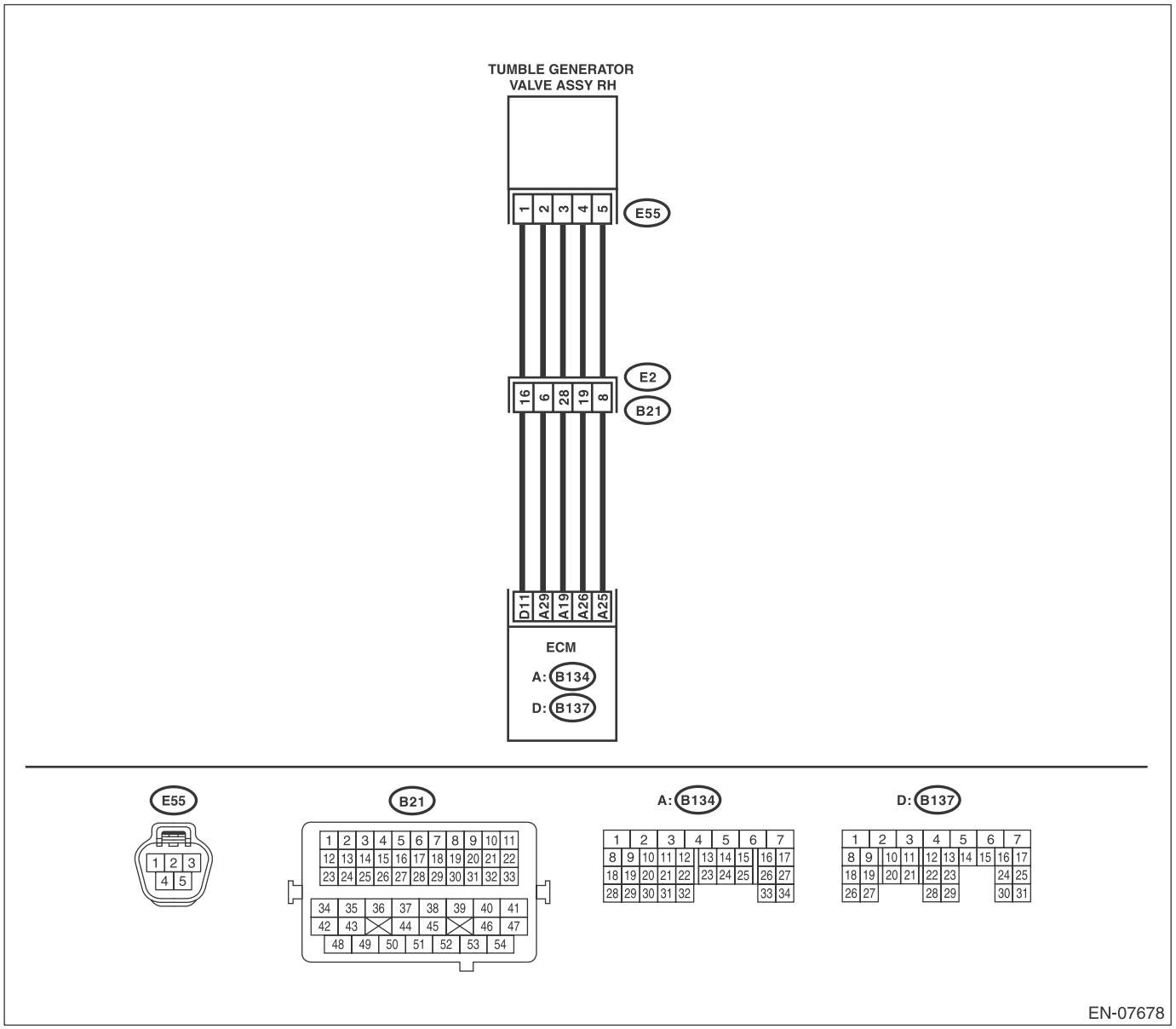

	Step	Check	Yes	No
1	**CHECK CURRENT DATA.** 1) Start the engine. 2) Read the data of tumble generator valve position sensor signal (RH) using Subaru Select Monitor or general scan tool. NOTE: • Subaru Select Monitor For detailed operation procedures, refer to "READ CURRENT DATA FOR ENGINE". <Ref. to EN(H4DOTC)(diag)-37, Subaru Select Monitor.> • General scan tool For detailed operation procedures, refer to the general scan tool operation manual.	Is the voltage less than 0.2 V?	Go to step **2**.	Even if DTC is detected, the circuit has returned to a normal condition at this time. Reproduce the failure, and then perform the diagnosis again. NOTE: In this case, temporary poor contact of connector, temporary open or short circuit of harness may be the cause.
2	**CHECK POWER SUPPLY OF TUMBLE GENERATOR VALVE ASSEMBLY RH.** 1) Turn the ignition switch to OFF. 2) Disconnect the connector from tumble generator valve assembly RH. 3) Turn the ignition switch to ON. 4) Measure the voltage between tumble generator valve assembly RH connector and engine ground. ***Connector & terminal*** ***(E55) No. 3 (+) — Engine ground (–):***	Is the voltage 4.5 V or more?	Go to step **3**.	Repair the harness and connector. NOTE: In this case, repair the following item: • Open circuit in harness between ECM and tumble generator valve assembly RH connector • Poor contact of ECM connector • Poor contact of coupling connector
3	**CHECK HARNESS BETWEEN ECM AND TUMBLE GENERATOR VALVE ASSEMBLY RH CONNECTOR.** 1) Turn the ignition switch to OFF. 2) Disconnect the connector from ECM. 3) Measure the resistance of harness between ECM and tumble generator valve assembly RH. ***Connector & terminal*** ***(B137) No. 11 — (E55) No. 1:***	Is the resistance less than 1 Ω?	Go to step **4**.	Repair the harness and connector. NOTE: In this case, repair the following item: • Open circuit in harness between ECM and tumble generator valve assembly RH connector • Poor contact of coupling connector
4	**CHECK HARNESS BETWEEN ECM AND TUMBLE GENERATOR VALVE ASSEMBLY RH CONNECTOR.** Measure the resistance between ECM and chassis ground. ***Connector & terminal*** ***(B137) No. 11 — Chassis ground:***	Is the resistance 1 MΩ or more?	Go to step **5**.	Repair the short circuit to ground in harness between ECM and tumble generator valve assembly RH connector.
5	**CHECK FOR POOR CONTACT.** Check for poor contact of tumble generator valve assembly RH connector.	Is there poor contact of ECM or the tumble generator valve assembly RH connector?	Repair the poor contact of ECM or tumble generator valve assembly RH connector.	Replace the tumble generator valve assembly RH. <Ref. to FU(H4DOTC)-46, Tumble Generator Valve Assembly.>

DA:DTC P2017 INTAKE MANIFOLD RUNNER POSITION SENSOR / SWITCH CIRCUIT HIGH (BANK 1)

DTC DETECTING CONDITION:

- Immediately at fault recognition
- GENERAL DESCRIPTION <Ref. to GD(H4DOTC)-191, DTC P2017 INTAKE MANIFOLD RUNNER POSITION SENSOR / SWITCH CIRCUIT HIGH (BANK 1), Diagnostic Trouble Code (DTC) Detecting Criteria.>

TROUBLE SYMPTOM:

- Improper idling
- Engine stalls.
- Poor driving performance

CAUTION:

After servicing or replacing faulty parts, perform Clear Memory Mode <Ref. to EN(H4DOTC)(diag)-55, OPERATION, Clear Memory Mode.>, and Inspection Mode <Ref. to EN(H4DOTC)(diag)-44, PROCEDURE, Inspection Mode.>.

WIRING DIAGRAM:

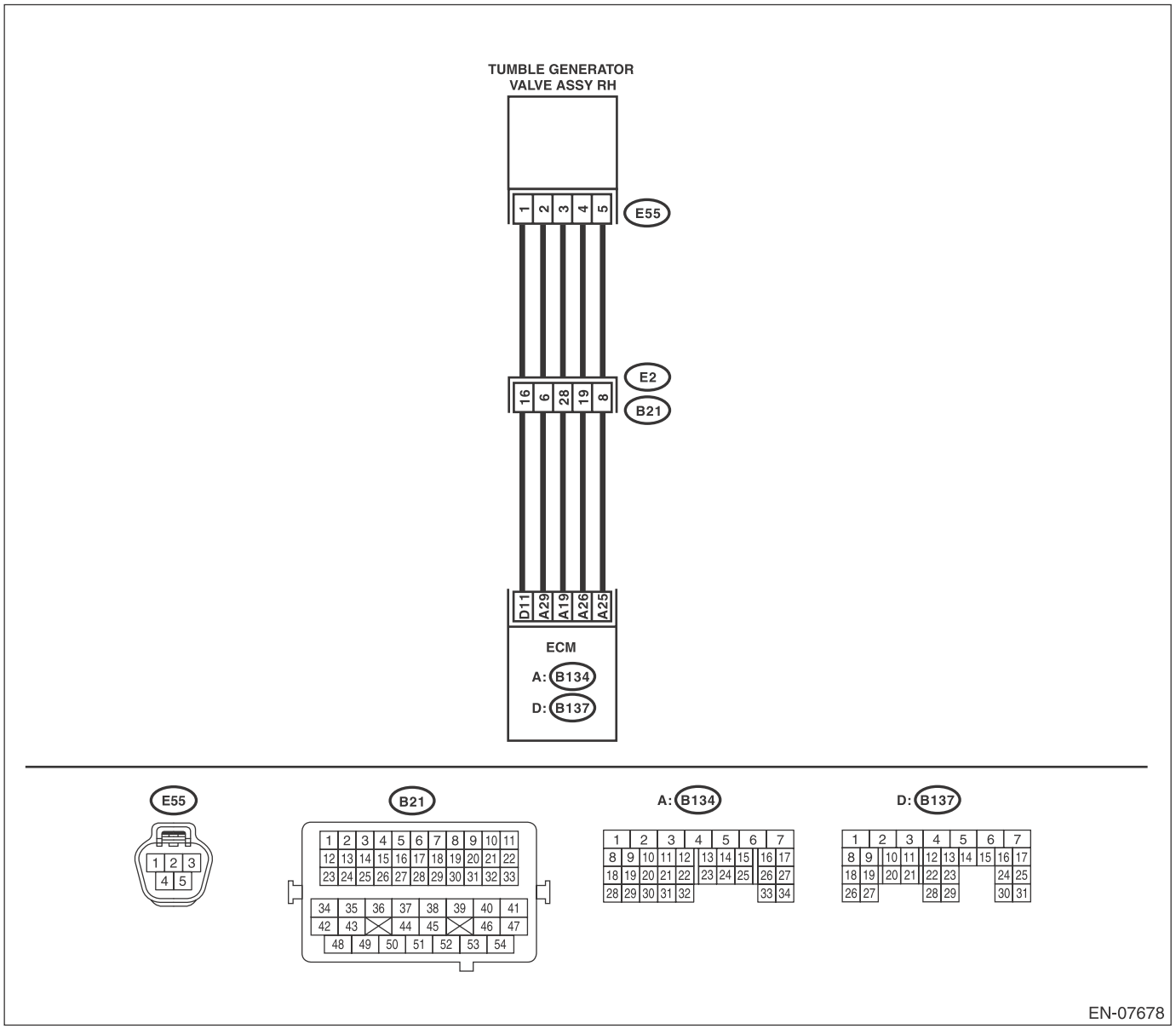

	Step	Check	Yes	No
1	**CHECK CURRENT DATA.** 1) Start the engine. 2) Read the data of tumble generator valve position sensor signal (RH) using Subaru Select Monitor or general scan tool. NOTE: • Subaru Select Monitor For detailed operation procedures, refer to "READ CURRENT DATA FOR ENGINE". <Ref. to EN(H4DOTC)(diag)-37, Subaru Select Monitor.> • General scan tool For detailed operation procedures, refer to the general scan tool operation manual.	Is the voltage 5 V or more?	Go to step **2**.	Even if DTC is detected, the circuit has returned to a normal condition at this time. Reproduce the failure, and then perform the diagnosis again. NOTE: In this case, temporary poor contact of connector, temporary open or short circuit of harness may be the cause.
2	**CHECK HARNESS BETWEEN ECM AND TUMBLE GENERATOR VALVE ASSEMBLY RH CONNECTOR.** 1) Turn the ignition switch to OFF. 2) Disconnect the connector from tumble generator valve assembly RH. 3) Start the engine. 4) Read the data of tumble generator valve position sensor signal (RH) using Subaru Select Monitor or general scan tool. NOTE: • Subaru Select Monitor For detailed operation procedures, refer to "READ CURRENT DATA FOR ENGINE". <Ref. to EN(H4DOTC)(diag)-37, Subaru Select Monitor.> • General scan tool For detailed operation procedures, refer to the general scan tool operation manual.	Is the voltage 5 V or more?	Repair the short circuit to power in harness between ECM and tumble generator valve assembly RH connector.	Go to step **3**.
3	**CHECK HARNESS BETWEEN ECM AND TUMBLE GENERATOR VALVE ASSEMBLY RH CONNECTOR.** 1) Turn the ignition switch to OFF. 2) Measure the resistance of harness between tumble generator valve assembly RH connector and engine ground. ***Connector & terminal*** ***(E55) No. 2 — Engine ground:***	Is the resistance less than 5 Ω?	Go to step **4**.	Repair the harness and connector. NOTE: In this case, repair the following item: • Open circuit in harness between ECM and tumble generator valve assembly RH connector • Poor contact of ECM connector • Poor contact of coupling connector
4	**CHECK FOR POOR CONTACT.** Check for poor contact of tumble generator valve assembly RH connector.	Is there poor contact of the tumble generator valve assembly RH connector?	Repair the poor contact of tumble generator valve assembly RH connector.	Replace the tumble generator valve assembly RH. <Ref. to FU(H4DOTC)-46, Tumble Generator Valve Assembly.>

DB:DTC P2021 INTAKE MANIFOLD RUNNER POSITION SENSOR / SWITCH CIRCUIT LOW (BANK 2)

DTC DETECTING CONDITION:

- Immediately at fault recognition
- GENERAL DESCRIPTION <Ref. to GD(H4DOTC)-192, DTC P2021 INTAKE MANIFOLD RUNNER POSITION SENSOR / SWITCH CIRCUIT LOW (BANK 2), Diagnostic Trouble Code (DTC) Detecting Criteria.>

TROUBLE SYMPTOM:

- Improper idling
- Engine stalls.
- Poor driving performance

CAUTION:

After servicing or replacing faulty parts, perform Clear Memory Mode <Ref. to EN(H4DOTC)(diag)-55, OPERATION, Clear Memory Mode.>, and Inspection Mode <Ref. to EN(H4DOTC)(diag)-44, PROCEDURE, Inspection Mode.>.

WIRING DIAGRAM:

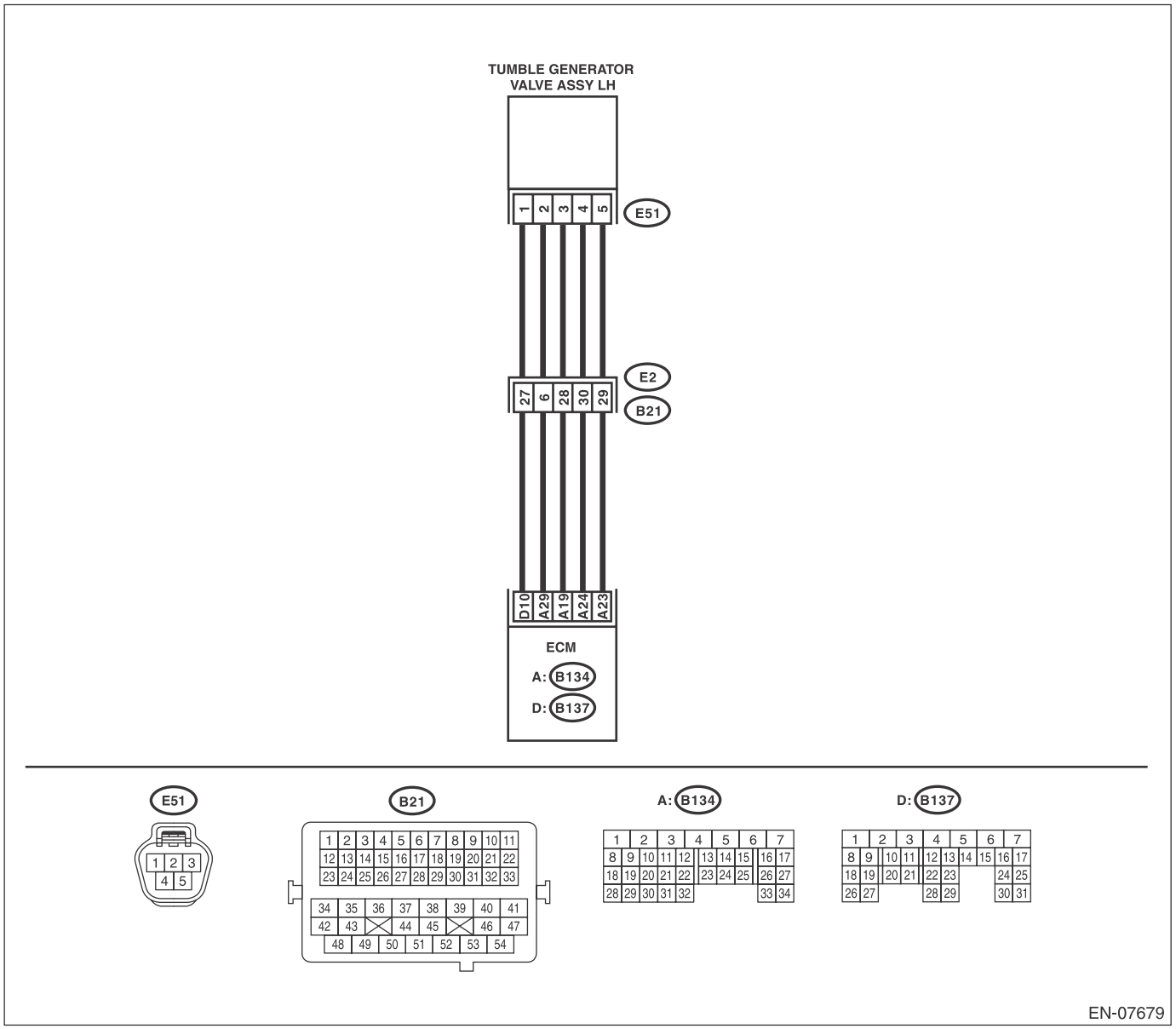

	Step	Check	Yes	No
1	**CHECK CURRENT DATA.** 1) Start the engine. 2) Read the data of tumble generator valve position sensor signal (LH) using Subaru Select Monitor or general scan tool. NOTE: • Subaru Select Monitor For detailed operation procedures, refer to "READ CURRENT DATA FOR ENGINE". <Ref. to EN(H4DOTC)(diag)-37, Subaru Select Monitor.> • General scan tool For detailed operation procedures, refer to the general scan tool operation manual.	Is the voltage less than 0.2 V?	Go to step **2**.	Even if DTC is detected, the circuit has returned to a normal condition at this time. Reproduce the failure, and then perform the diagnosis again. NOTE: In this case, temporary poor contact of connector, temporary open or short circuit of harness may be the cause.
2	**CHECK POWER SUPPLY OF TUMBLE GENERATOR VALVE ASSEMBLY LH.** 1) Turn the ignition switch to OFF. 2) Disconnect the connector from tumble generator valve assembly LH. 3) Turn the ignition switch to ON. 4) Measure the voltage between tumble generator valve assembly LH connector and engine ground. ***Connector & terminal*** ***(E51) No. 3 (+) — Engine ground (–):***	Is the voltage 4.5 V or more?	Go to step **3**.	Repair the harness and connector. NOTE: In this case, repair the following item: • Open circuit in harness between ECM and tumble generator valve assembly LH connector • Poor contact of ECM connector • Poor contact of coupling connector
3	**CHECK HARNESS BETWEEN ECM AND TUMBLE GENERATOR VALVE ASSEMBLY LH CONNECTOR.** 1) Turn the ignition switch to OFF. 2) Disconnect the connector from ECM. 3) Measure the resistance of harness between ECM and tumble generator valve assembly LH. ***Connector & terminal*** ***(B137) No. 10 — (E51) No. 1:***	Is the resistance less than 1 Ω?	Go to step **4**.	Repair the harness and connector. NOTE: In this case, repair the following item: • Open circuit in harness between ECM and tumble generator valve assembly LH connector • Poor contact of coupling connector
4	**CHECK HARNESS BETWEEN ECM AND TUMBLE GENERATOR VALVE ASSEMBLY LH CONNECTOR.** Measure the resistance between ECM and chassis ground. ***Connector & terminal*** ***(B137) No. 10 — Chassis ground:***	Is the resistance 1 MΩ or more?	Go to step **5**.	Repair the short circuit to ground in harness between ECM and tumble generator valve assembly LH connector.
5	**CHECK FOR POOR CONTACT.** Check for poor contact of tumble generator valve assembly LH connector.	Is there poor contact of ECM or the tumble generator valve assembly LH connector?	Repair the poor contact of ECM or tumble generator valve assembly LH connector.	Replace the tumble generator valve assembly LH. <Ref. to FU(H4DOTC)-46, Tumble Generator Valve Assembly.>

DC:DTC P2022 INTAKE MANIFOLD RUNNER POSITION SENSOR / SWITCH CIRCUIT HIGH (BANK 2)

DTC DETECTING CONDITION:

- Immediately at fault recognition
- GENERAL DESCRIPTION <Ref. to GD(H4DOTC)-193, DTC P2022 INTAKE MANIFOLD RUNNER POSITION SENSOR / SWITCH CIRCUIT HIGH (BANK 2), Diagnostic Trouble Code (DTC) Detecting Criteria.>

TROUBLE SYMPTOM:

- Improper idling
- Engine stalls.
- Poor driving performance

CAUTION:

After servicing or replacing faulty parts, perform Clear Memory Mode <Ref. to EN(H4DOTC)(diag)-55, OPERATION, Clear Memory Mode.>, and Inspection Mode <Ref. to EN(H4DOTC)(diag)-44, PROCEDURE, Inspection Mode.>.

WIRING DIAGRAM:

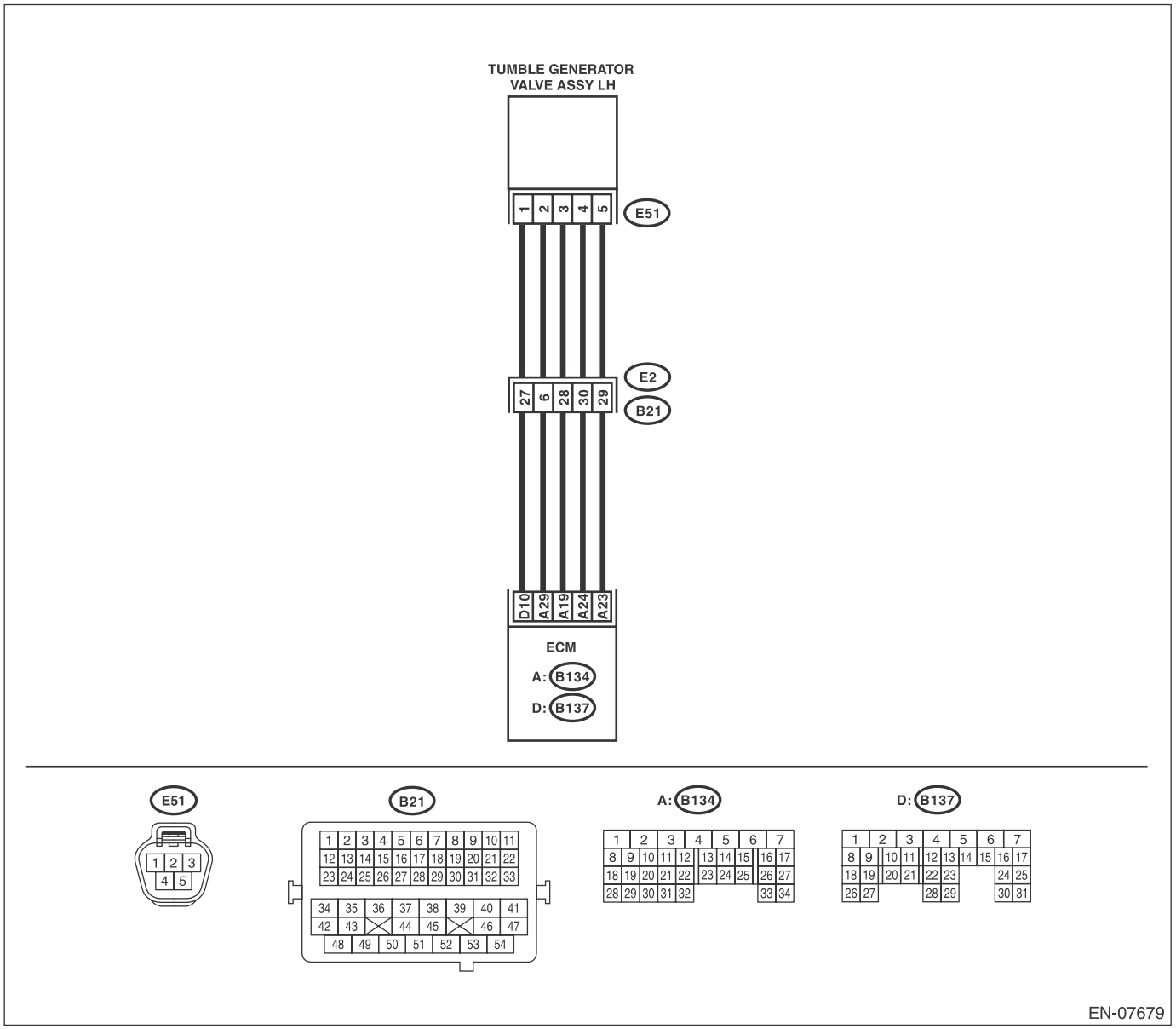

	Step	Check	Yes	No
1	**CHECK CURRENT DATA.** 1) Start the engine. 2) Read the data of tumble generator valve position sensor signal (LH) using Subaru Select Monitor or general scan tool. NOTE: • Subaru Select Monitor For detailed operation procedures, refer to "READ CURRENT DATA FOR ENGINE". <Ref. to EN(H4DOTC)(diag)-37, Subaru Select Monitor.> • General scan tool For detailed operation procedures, refer to the general scan tool operation manual.	Is the voltage 5 V or more?	Go to step **2**.	Even if DTC is detected, the circuit has returned to a normal condition at this time. Reproduce the failure, and then perform the diagnosis again. NOTE: In this case, temporary poor contact of connector, temporary open or short circuit of harness may be the cause.
2	**CHECK HARNESS BETWEEN ECM AND TUMBLE GENERATOR VALVE ASSEMBLY LH CONNECTOR.** 1) Turn the ignition switch to OFF. 2) Disconnect the connector from tumble generator valve assembly LH. 3) Start the engine. 4) Read the data of tumble generator valve position sensor signal (LH) using Subaru Select Monitor or general scan tool. NOTE: • Subaru Select Monitor For detailed operation procedures, refer to "READ CURRENT DATA FOR ENGINE". <Ref. to EN(H4DOTC)(diag)-37, Subaru Select Monitor.> • General scan tool For detailed operation procedures, refer to the general scan tool operation manual.	Is the voltage 5 V or more?	Repair the short circuit to power in harness between ECM and tumble generator valve assembly LH connector.	Go to step **3**.
3	**CHECK HARNESS BETWEEN ECM AND TUMBLE GENERATOR VALVE ASSEMBLY LH CONNECTOR.** 1) Turn the ignition switch to OFF. 2) Measure the resistance of harness between tumble generator valve assembly LH connector and engine ground. ***Connector & terminal*** ***(E51) No. 2 — Engine ground:***	Is the resistance less than 5 Ω?	Go to step **4**.	Repair the harness and connector. NOTE: In this case, repair the following item: • Open circuit in harness between ECM and tumble generator valve assembly LH connector • Poor contact of ECM connector • Poor contact of coupling connector
4	**CHECK FOR POOR CONTACT.** Check for poor contact of tumble generator valve assembly LH connector.	Is there poor contact of the tumble generator valve assembly LH connector?	Repair the poor contact of tumble generator valve assembly LH connector.	Replace the tumble generator valve assembly LH. <Ref. to FU(H4DOTC)-46, Tumble Generator Valve Assembly.>

DD:DTC P2088 INTAKE CAMSHAFT POSITION ACTUATOR CONTROL CIRCUIT LOW (BANK 1)

DTC DETECTING CONDITION:

- Immediately at fault recognition
- GENERAL DESCRIPTION <Ref. to GD(H4DOTC)-194, DTC P2088 INTAKE CAMSHAFT POSITION ACTUATOR CONTROL CIRCUIT LOW (BANK 1), Diagnostic Trouble Code (DTC) Detecting Criteria.>

TROUBLE SYMPTOM:

Improper idling

CAUTION:

After servicing or replacing faulty parts, perform Clear Memory Mode <Ref. to EN(H4DOTC)(diag)-55, OPERATION, Clear Memory Mode.>, and Inspection Mode <Ref. to EN(H4DOTC)(diag)-44, PROCEDURE, Inspection Mode.>.

WIRING DIAGRAM:

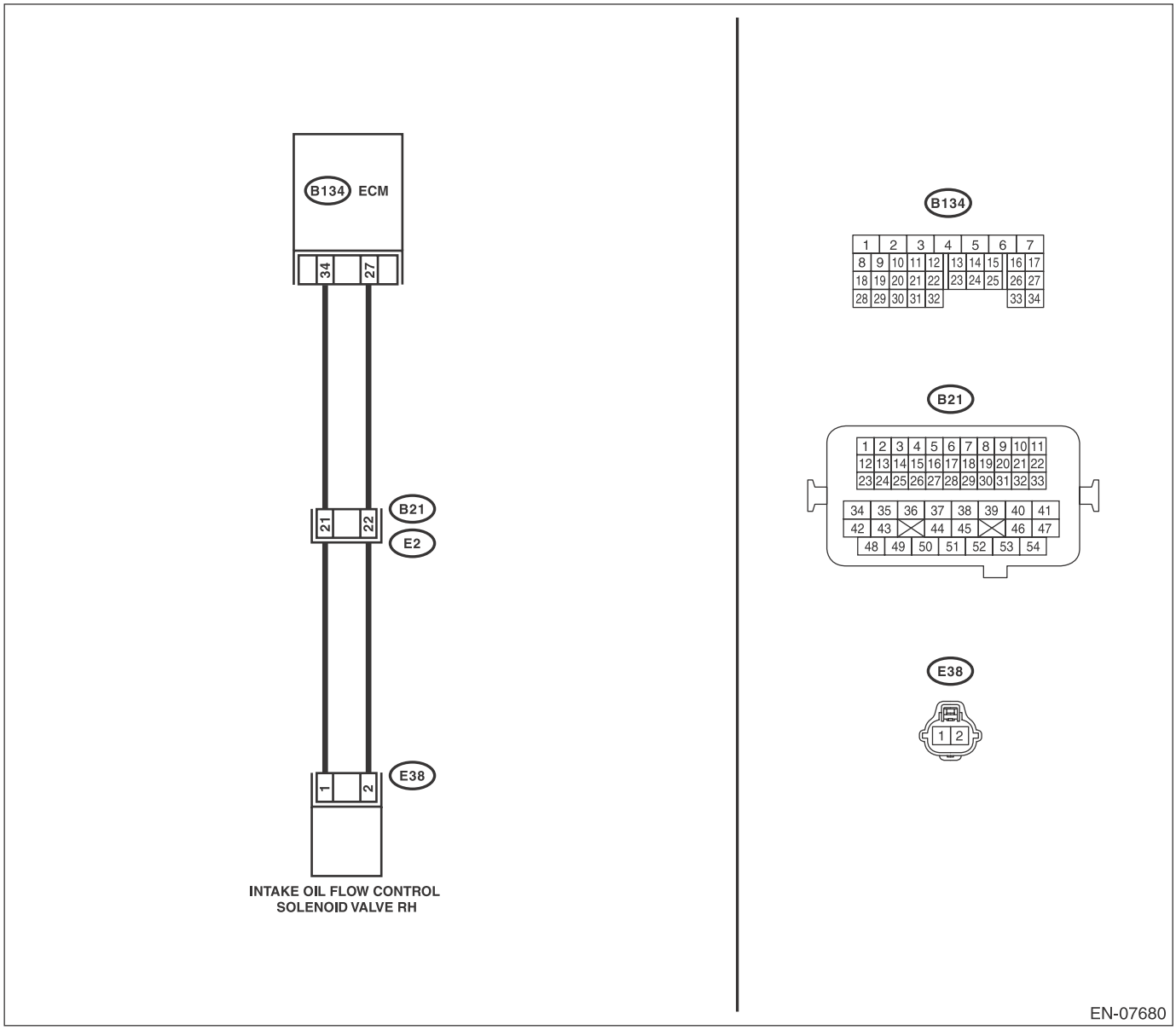

	Step	Check	Yes	No
1	**CHECK HARNESS BETWEEN ECM AND OIL FLOW CONTROL SOLENOID VALVE RH CONNECTOR.** 1) Turn the ignition switch to OFF. 2) Disconnect the connectors from ECM and oil flow control solenoid valve RH. 3) Measure the resistance of harness between ECM and oil flow control solenoid valve RH connector. ***Connector & terminal*** ***(B134) No. 34 — (E38) No. 1:*** ***(B134) No. 27 — (E38) No. 2:***	Is the resistance less than 1 Ω?	Go to step **2**.	Repair the harness and connector. NOTE: In this case, repair the following item: • Open circuit in harness between ECM and oil flow control solenoid valve RH connector • Poor contact of coupling connector
2	**CHECK HARNESS BETWEEN ECM AND OIL FLOW CONTROL SOLENOID VALVE RH CONNECTOR.** Measure the resistance between ECM and chassis ground. ***Connector & terminal*** ***(B134) No. 34 — Chassis ground:*** ***(B134) No. 27 — Chassis ground:***	Is the resistance 1 MΩ or more?	Go to step **3**.	Repair the short circuit to ground in harness between ECM and oil flow control solenoid valve RH connector.
3	**CHECK OIL FLOW CONTROL SOLENOID VALVE.** Measure the resistance between oil flow control solenoid valve terminals. ***Terminals*** ***No. 1 — No. 2:***	Is the resistance 6 — 12 Ω?	Repair the poor contact of ECM and oil flow control solenoid valve RH connector RH.	Replace the oil flow control solenoid valve RH. <Ref. to ME(H4DOTC)-62, Camshaft.>

DE:DTC P2089 INTAKE CAMSHAFT POSITION ACTUATOR CONTROL CIRCUIT HIGH (BANK 1)

DTC DETECTING CONDITION:

- Immediately at fault recognition
- GENERAL DESCRIPTION <Ref. to GD(H4DOTC)-195, DTC P2089 INTAKE CAMSHAFT POSITION ACTUATOR CONTROL CIRCUIT HIGH (BANK 1), Diagnostic Trouble Code (DTC) Detecting Criteria.>

TROUBLE SYMPTOM:

Improper idling

CAUTION:

After servicing or replacing faulty parts, perform Clear Memory Mode <Ref. to EN(H4DOTC)(diag)-55, OPERATION, Clear Memory Mode.>, and Inspection Mode <Ref. to EN(H4DOTC)(diag)-44, PROCEDURE, Inspection Mode.>.

WIRING DIAGRAM:

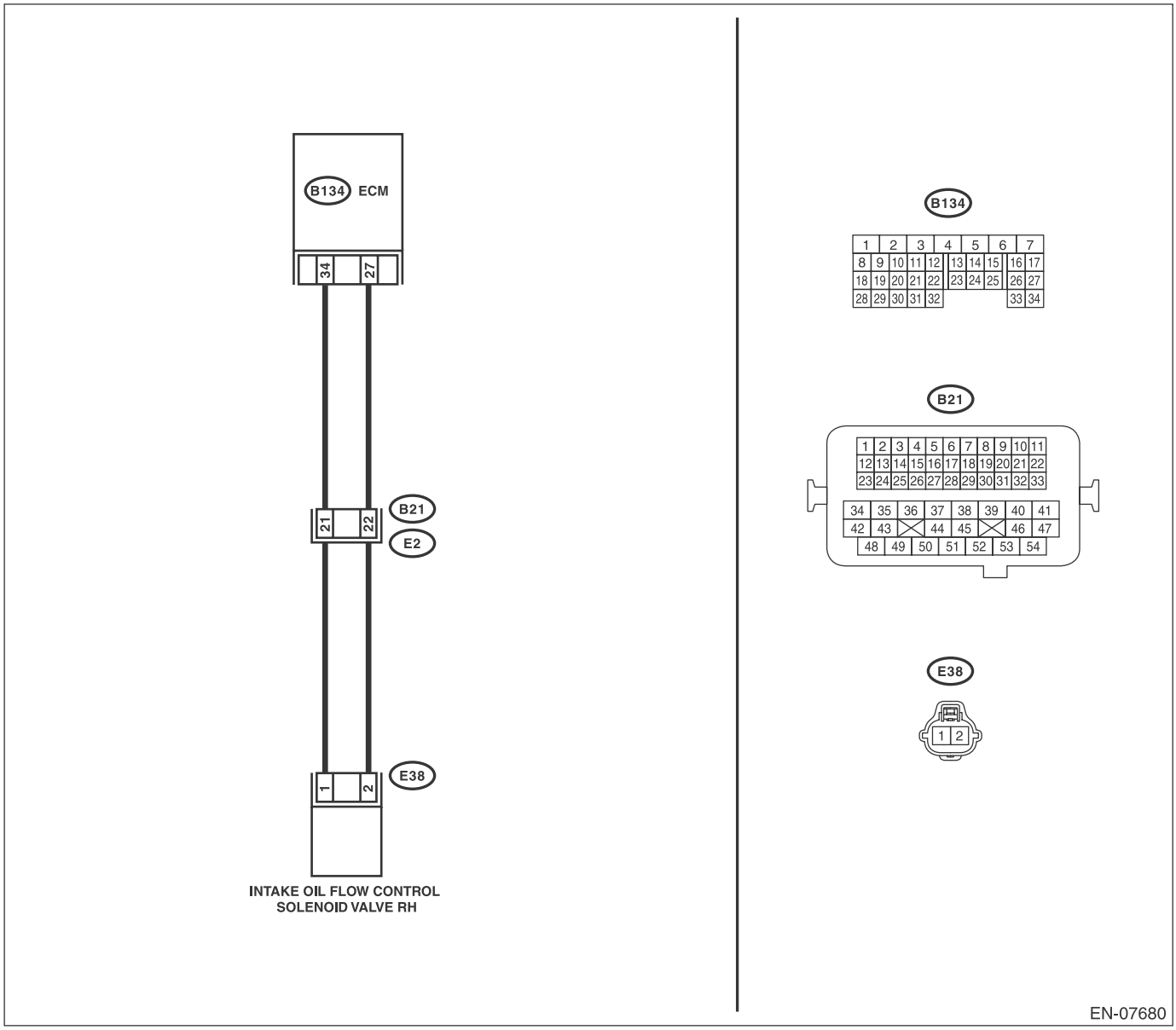

	Step	Check	Yes	No
1	**CHECK HARNESS BETWEEN ECM AND OIL FLOW CONTROL SOLENOID VALVE RH CONNECTOR.** 1) Turn the ignition switch to OFF. 2) Disconnect the connectors from ECM and oil flow control solenoid valve RH. 3) Measure the voltage between ECM and chassis ground. ***Connector & terminal*** ***(B134) No. 34 (+) — Chassis ground (–):*** ***(B134) No. 27 (+) — Chassis ground (–):***	Is the voltage less than 1 V?	Go to step **2**.	Repair the short circuit to power supply in harness between ECM and oil flow control solenoid valve RH connector.
2	**CHECK HARNESS BETWEEN ECM AND OIL FLOW CONTROL SOLENOID VALVE RH CONNECTOR.** Measure the resistance of harness between ECM and oil flow control solenoid valve RH connector. ***Connector & terminal*** ***(B134) No. 34 — (E38) No. 1:*** ***(B134) No. 27 — (E38) No. 2:***	Is the resistance less than 1 Ω?	Go to step **3**.	Repair the harness and connector. NOTE: In this case, repair the following item: • Open circuit in harness between ECM and oil flow control solenoid valve RH connector • Poor contact of coupling connector
3	**CHECK OIL FLOW CONTROL SOLENOID VALVE.** Measure the resistance between oil flow control solenoid valve terminals. ***Terminals*** ***No. 1 — No. 2:***	Is the resistance 6 — 12 Ω?	Repair the poor contact of ECM and oil flow control solenoid valve RH connector RH.	Replace the oil flow control solenoid valve RH. <Ref. to ME(H4DOTC)-62, Camshaft.>

DF:DTC P2090 EXHAUST CAMSHAFT POSITION ACTUATOR CONTROL CIRCUIT LOW (BANK 1)

DTC DETECTING CONDITION:

- Immediately at fault recognition
- GENERAL DESCRIPTION <Ref. to GD(H4DOTC)-196, DTC P2090 EXHAUST CAMSHAFT POSITION ACTUATOR CONTROL CIRCUIT LOW (BANK 1), Diagnostic Trouble Code (DTC) Detecting Criteria.>

TROUBLE SYMPTOM:

Improper idling

CAUTION:

After servicing or replacing faulty parts, perform Clear Memory Mode <Ref. to EN(H4DOTC)(diag)-55, OPERATION, Clear Memory Mode.>, and Inspection Mode <Ref. to EN(H4DOTC)(diag)-44, PROCEDURE, Inspection Mode.>.

WIRING DIAGRAM:

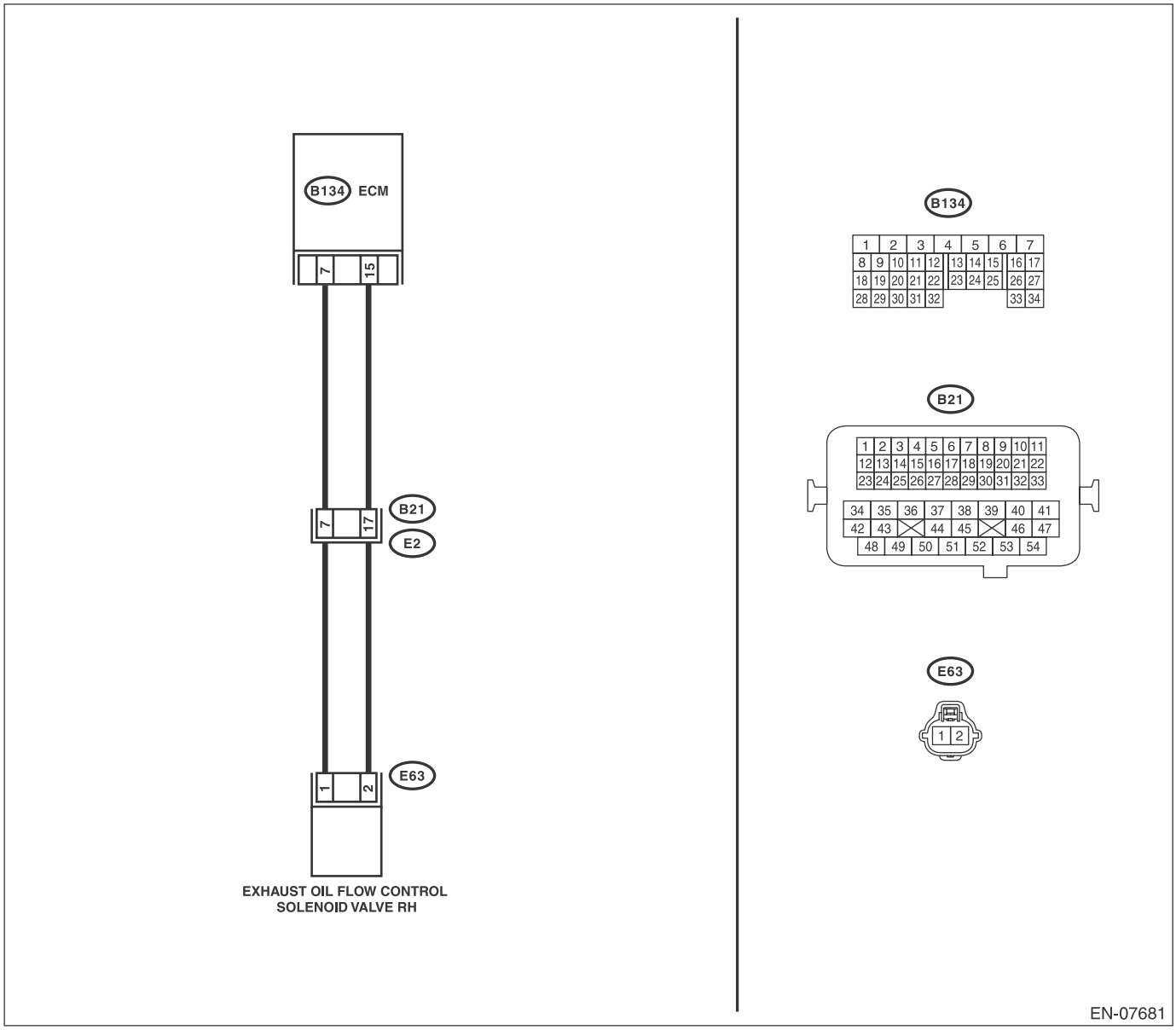

	Step	Check	Yes	No
1	**CHECK HARNESS BETWEEN ECM AND OIL FLOW CONTROL SOLENOID VALVE RH CONNECTOR.** 1) Turn the ignition switch to OFF. 2) Disconnect the connectors from ECM and oil flow control solenoid valve RH. 3) Measure the resistance of harness between ECM and oil flow control solenoid valve RH connector. ***Connector & terminal*** ***(B134) No. 7 — (E63) No. 1:*** ***(B134) No. 15 — (E63) No. 2:***	Is the resistance less than 1 Ω?	Go to step **2**.	Repair the harness and connector. NOTE: In this case, repair the following item: • Open circuit in harness between ECM and oil flow control solenoid valve RH connector • Poor contact of coupling connector
2	**CHECK HARNESS BETWEEN ECM AND OIL FLOW CONTROL SOLENOID VALVE RH CONNECTOR.** Measure the resistance between ECM and chassis ground. ***Connector & terminal*** ***(B134) No. 7 — Chassis ground:*** ***(B134) No. 15 — Chassis ground:***	Is the resistance 1 MΩ or more?	Go to step **3**.	Repair the short circuit to ground in harness between ECM and oil flow control solenoid valve RH connector.
3	**CHECK OIL FLOW CONTROL SOLENOID VALVE.** Measure the resistance between oil flow control solenoid valve terminals. ***Terminals*** ***No. 1 — No. 2:***	Is the resistance 6 — 12 Ω?	Repair the poor contact of ECM and oil flow control solenoid valve RH connector RH.	Replace the oil flow control solenoid valve RH. <Ref. to FU(H4DOTC)-49, Oil Flow Control Solenoid Valve.>

DG:DTC P2091 EXHAUST CAMSHAFT POSITION ACTUATOR CONTROL CIRCUIT HIGH (BANK 1)

DTC DETECTING CONDITION:

- Immediately at fault recognition
- GENERAL DESCRIPTION <Ref. to GD(H4DOTC)-197, DTC P2091 EXHAUST CAMSHAFT POSITION ACTUATOR CONTROL CIRCUIT HIGH (BANK 1), Diagnostic Trouble Code (DTC) Detecting Criteria.>

TROUBLE SYMPTOM:

Improper idling

CAUTION:

After servicing or replacing faulty parts, perform Clear Memory Mode <Ref. to EN(H4DOTC)(diag)-55, OPERATION, Clear Memory Mode.>, and Inspection Mode <Ref. to EN(H4DOTC)(diag)-44, PROCEDURE, Inspection Mode.>.

WIRING DIAGRAM:

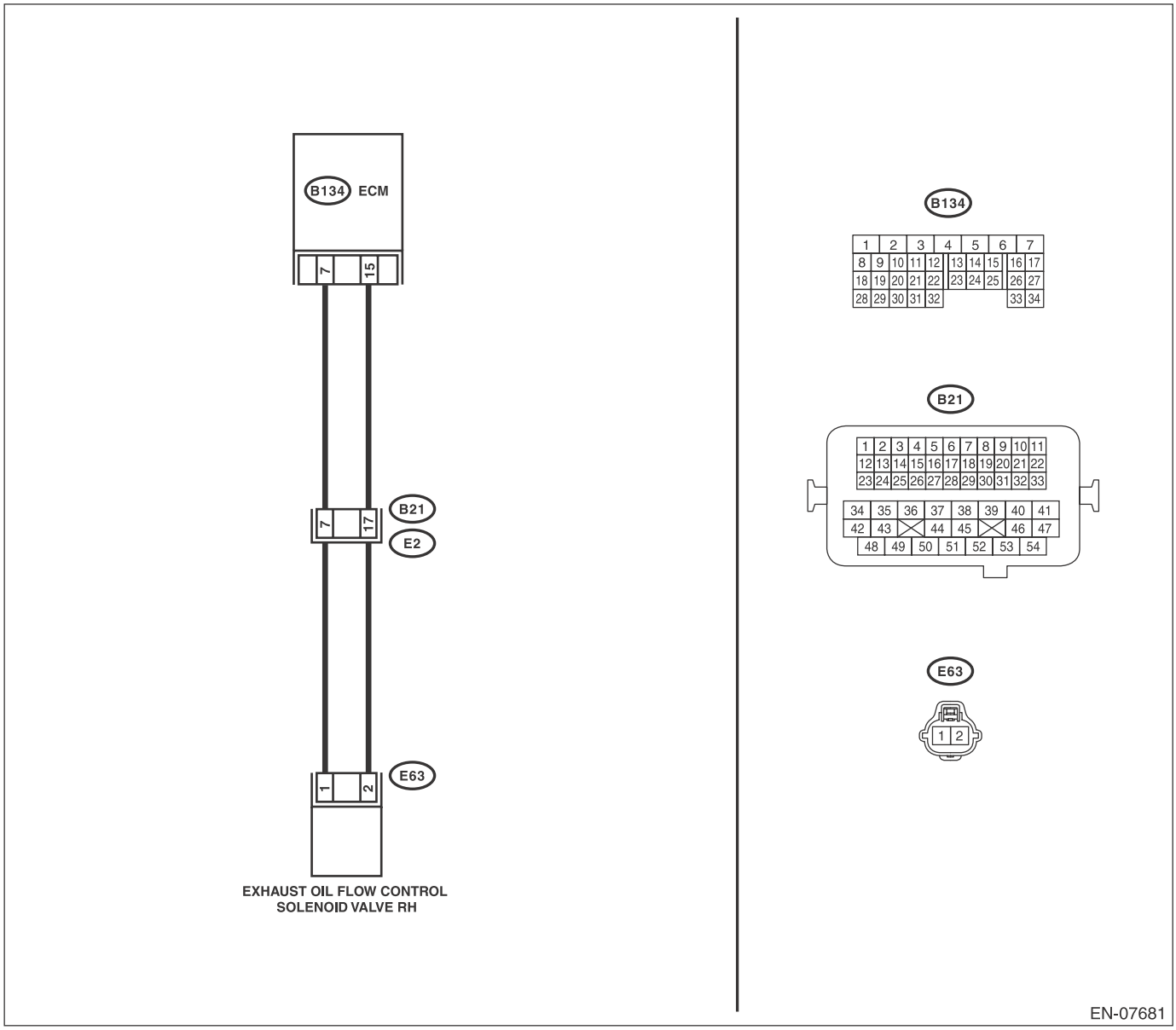

	Step	Check	Yes	No
1	**CHECK HARNESS BETWEEN ECM AND OIL FLOW CONTROL SOLENOID VALVE RH CONNECTOR.** 1) Turn the ignition switch to OFF. 2) Disconnect the connectors from ECM and oil flow control solenoid valve RH. 3) Measure the voltage between ECM and chassis ground. ***Connector & terminal*** ***(B134) No. 7 (+) — Chassis ground (–):*** ***(B134) No. 15 (+) — Chassis ground (–):***	Is the voltage less than 1 V?	Go to step **2**.	Repair the short circuit to power supply in harness between ECM and oil flow control solenoid valve RH connector.
2	**CHECK HARNESS BETWEEN ECM AND OIL FLOW CONTROL SOLENOID VALVE RH CONNECTOR.** Measure the resistance of harness between ECM and oil flow control solenoid valve RH connector. ***Connector & terminal*** ***(B134) No. 7 — (E63) No. 1:*** ***(B134) No. 15 — (E63) No. 2:***	Is the resistance less than 1 Ω?	Go to step **3**.	Repair the harness and connector. NOTE: In this case, repair the following item: • Open circuit in harness between ECM and oil flow control solenoid valve RH connector • Poor contact of coupling connector
3	**CHECK OIL FLOW CONTROL SOLENOID VALVE.** Measure the resistance between oil flow control solenoid valve terminals. ***Terminals*** ***No. 1 — No. 2:***	Is the resistance 6 — 12 Ω?	Repair the poor contact of ECM and oil flow control solenoid valve RH connector RH.	Replace the oil flow control solenoid valve RH. <Ref. to FU(H4DOTC)-49, Oil Flow Control Solenoid Valve.>

DH:DTC P2092 INTAKE CAMSHAFT POSITION ACTUATOR CONTROL CIRCUIT LOW (BANK 2)

DTC DETECTING CONDITION:

- Immediately at fault recognition
- GENERAL DESCRIPTION <Ref. to GD(H4DOTC)-198, DTC P2092 INTAKE CAMSHAFT POSITION ACTUATOR CONTROL CIRCUIT LOW (BANK 2), Diagnostic Trouble Code (DTC) Detecting Criteria.>

TROUBLE SYMPTOM:

Improper idling

CAUTION:

After servicing or replacing faulty parts, perform Clear Memory Mode <Ref. to EN(H4DOTC)(diag)-55, OPERATION, Clear Memory Mode.>, and Inspection Mode <Ref. to EN(H4DOTC)(diag)-44, PROCEDURE, Inspection Mode.>.

WIRING DIAGRAM:

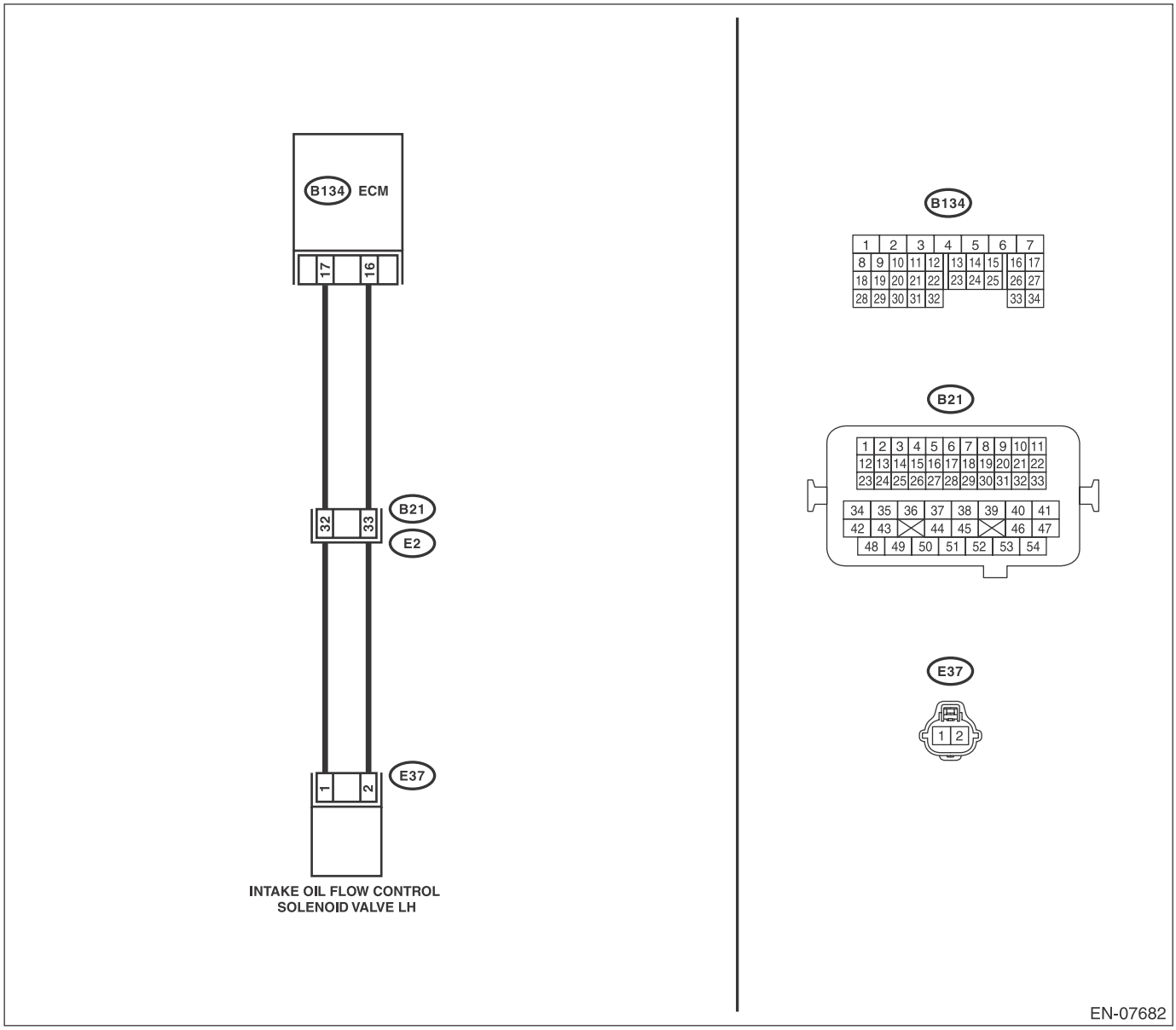

	Step	Check	Yes	No
1	**CHECK HARNESS BETWEEN ECM AND OIL FLOW CONTROL SOLENOID VALVE LH CONNECTOR.** 1) Turn the ignition switch to OFF. 2) Disconnect the connectors from ECM and oil flow control solenoid valve LH. 3) Measure the resistance of harness between ECM and oil flow control solenoid valve LH connector. ***Connector & terminal*** ***(B134) No. 17 — (E37) No. 1:*** ***(B134) No. 16 — (E37) No. 2:***	Is the resistance less than 1 Ω?	Go to step **2.**	Repair the harness and connector. NOTE: In this case, repair the following item: • Open circuit in harness between ECM and oil flow control solenoid valve RH connector • Poor contact of coupling connector
2	**CHECK HARNESS BETWEEN ECM AND OIL FLOW CONTROL SOLENOID VALVE LH CONNECTOR.** Measure the resistance between ECM and chassis ground. ***Connector & terminal*** ***(B134) No. 17 — Chassis ground:*** ***(B134) No. 16 — Chassis ground:***	Is the resistance 1 MΩ or more?	Go to step **3.**	Repair the short circuit to ground in harness between ECM and oil flow control solenoid valve LH connector.
3	**CHECK OIL FLOW CONTROL SOLENOID VALVE.** Measure the resistance between oil flow control solenoid valve terminals. ***Terminals*** ***No. 1 — No. 2:***	Is the resistance 6 — 12 Ω?	Repair the poor contact of ECM and oil flow control solenoid valve LH connector.	Replace the oil flow control solenoid valve LH. <Ref. to ME(H4DOTC)-62, Camshaft.>

DI: DTC P2093 INTAKE CAMSHAFT POSITION ACTUATOR CONTROL CIRCUIT HIGH (BANK 2)

DTC DETECTING CONDITION:

- Immediately at fault recognition
- GENERAL DESCRIPTION <Ref. to GD(H4DOTC)-198, DTC P2093 INTAKE CAMSHAFT POSITION ACTUATOR CONTROL CIRCUIT HIGH (BANK 2), Diagnostic Trouble Code (DTC) Detecting Criteria.>

TROUBLE SYMPTOM:

Improper idling

CAUTION:

After servicing or replacing faulty parts, perform Clear Memory Mode <Ref. to EN(H4DOTC)(diag)-55, OPERATION, Clear Memory Mode.>, and Inspection Mode <Ref. to EN(H4DOTC)(diag)-44, PROCEDURE, Inspection Mode.>.

WIRING DIAGRAM:

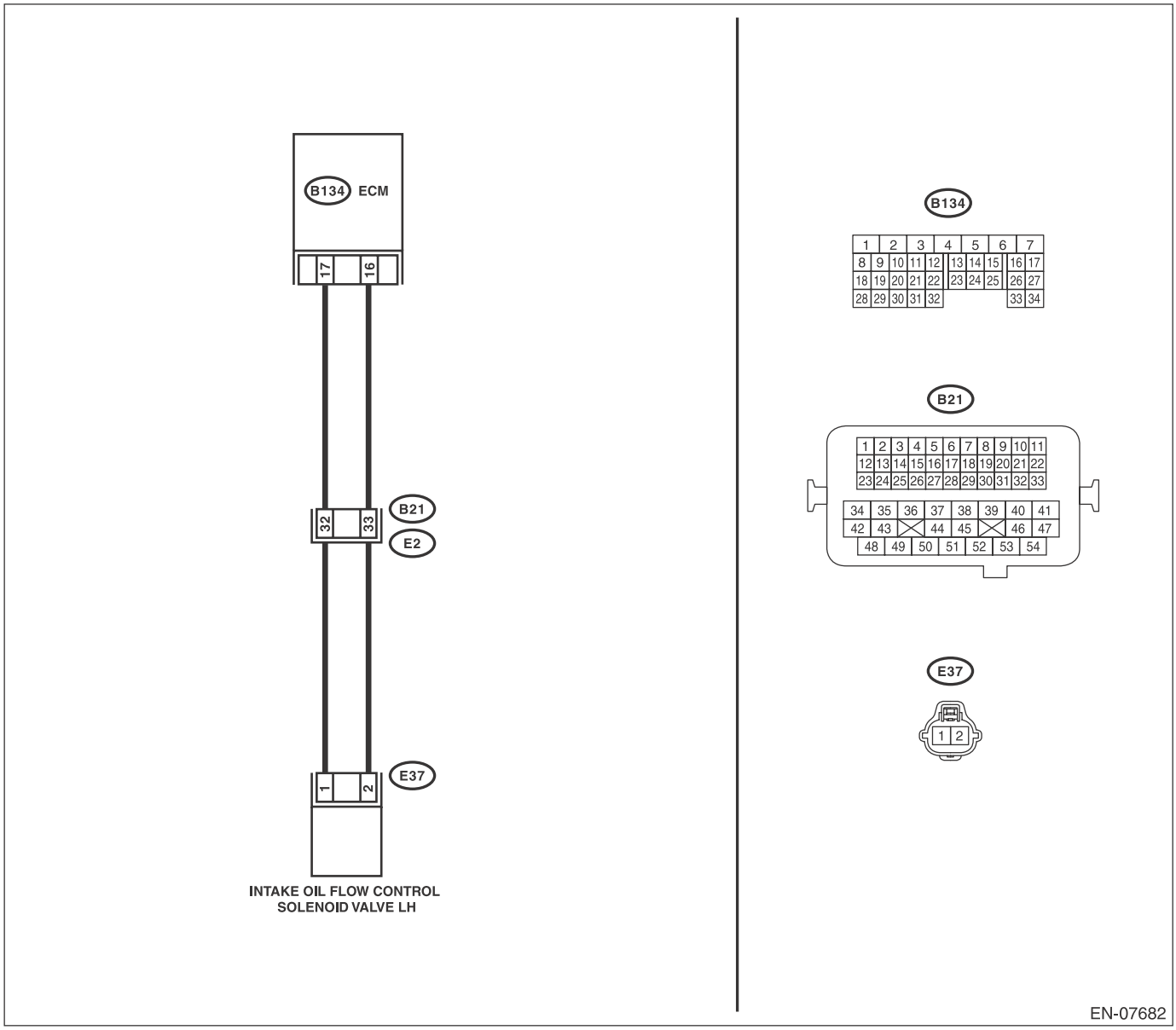

	Step	Check	Yes	No
1	**CHECK HARNESS BETWEEN ECM AND OIL FLOW CONTROL SOLENOID VALVE LH CONNECTOR.** 1) Turn the ignition switch to OFF. 2) Disconnect the connectors from ECM and oil flow control solenoid valve LH. 3) Measure the voltage between ECM and chassis ground. ***Connector & terminal*** ***(B134) No. 17 (+) — Chassis ground (–):*** ***(B134) No. 16 (+) — Chassis ground (–):***	Is the voltage less than 1 V?	Go to step **2**.	Repair the short circuit to power supply in harness between ECM and oil flow control solenoid valve LH connector.
2	**CHECK HARNESS BETWEEN ECM AND OIL FLOW CONTROL SOLENOID VALVE LH CONNECTOR.** Measure the resistance of harness between ECM and oil flow control solenoid valve LH connector. ***Connector & terminal*** ***(B134) No. 17 — (E37) No. 1:*** ***(B134) No. 16 — (E37) No. 2:***	Is the resistance less than 1 Ω?	Go to step **3**.	Repair the harness and connector. NOTE: In this case, repair the following item: • Open circuit in harness between ECM and oil flow control solenoid valve RH connector • Poor contact of coupling connector
3	**CHECK OIL FLOW CONTROL SOLENOID VALVE.** Measure the resistance between oil flow control solenoid valve terminals. ***Terminals*** ***No. 1 — No. 2:***	Is the resistance 6 — 12 Ω?	Repair the poor contact of ECM and oil flow control solenoid valve LH connector.	Replace the oil flow control solenoid valve LH. <Ref. to ME(H4DOTC)-62, Camshaft.>

DJ:DTC P2094 EXHAUST CAMSHAFT POSITION ACTUATOR CONTROL CIRCUIT LOW (BANK 2)

DTC DETECTING CONDITION:

- Immediately at fault recognition
- GENERAL DESCRIPTION <Ref. to GD(H4DOTC)-198, DTC P2094 EXHAUST CAMSHAFT POSITION ACTUATOR CONTROL CIRCUIT LOW (BANK 2), Diagnostic Trouble Code (DTC) Detecting Criteria.>

TROUBLE SYMPTOM:

Improper idling

CAUTION:

After servicing or replacing faulty parts, perform Clear Memory Mode <Ref. to EN(H4DOTC)(diag)-55, OPERATION, Clear Memory Mode.>, and Inspection Mode <Ref. to EN(H4DOTC)(diag)-44, PROCEDURE, Inspection Mode.>.

WIRING DIAGRAM:

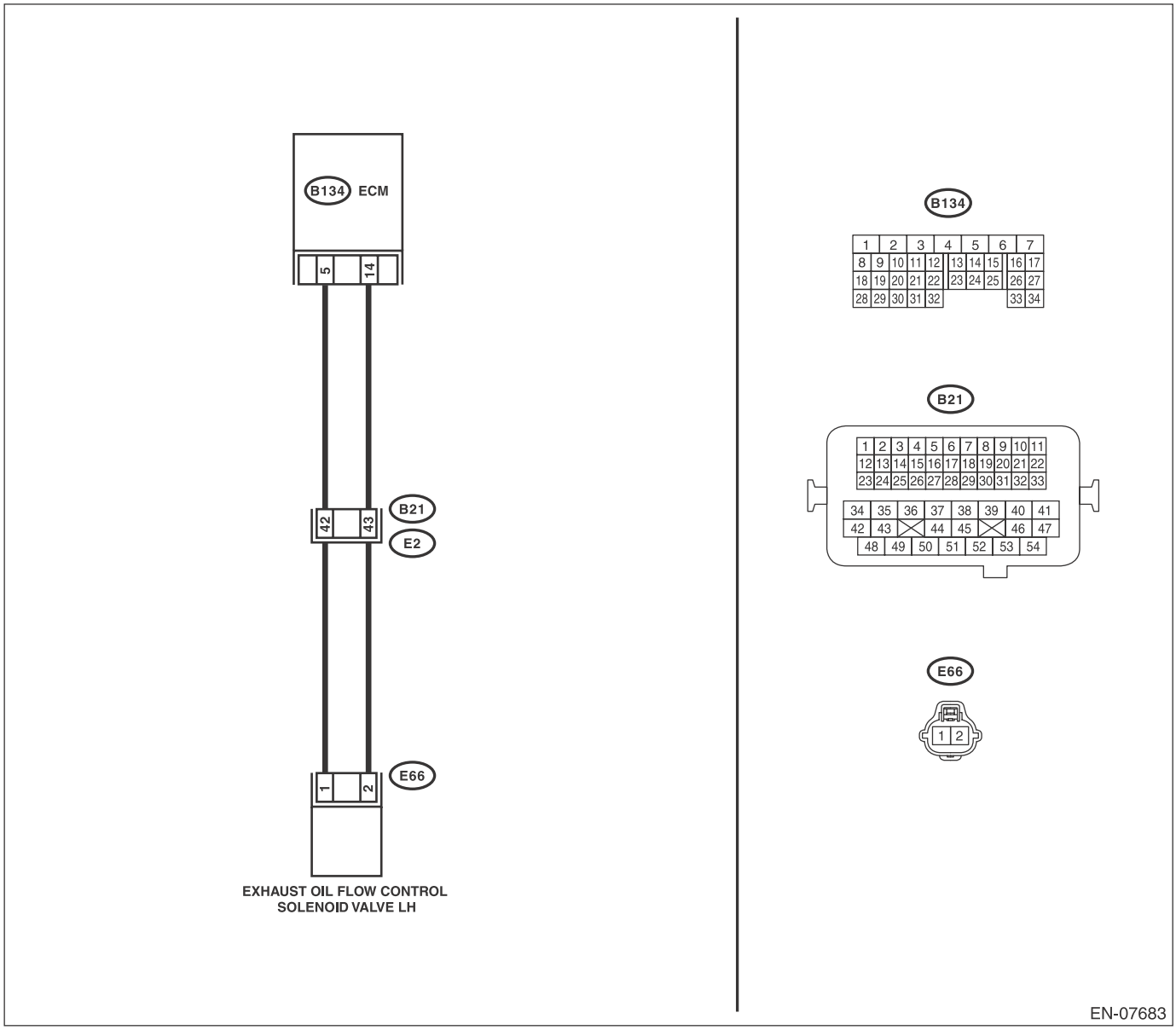

	Step	Check	Yes	No
1	**CHECK HARNESS BETWEEN ECM AND OIL FLOW CONTROL SOLENOID VALVE LH CONNECTOR.** 1) Turn the ignition switch to OFF. 2) Disconnect the connectors from ECM and oil flow control solenoid valve LH. 3) Measure the resistance of harness between ECM and oil flow control solenoid valve LH connector. ***Connector & terminal*** ***(B134) No. 5 — (E66) No. 1:*** ***(B134) No. 14 — (E66) No. 2:***	Is the resistance less than 1 Ω?	Go to step **2**.	Repair the harness and connector. NOTE: In this case, repair the following item: • Open circuit in harness between ECM and oil flow control solenoid valve RH connector • Poor contact of coupling connector
2	**CHECK HARNESS BETWEEN ECM AND OIL FLOW CONTROL SOLENOID VALVE LH CONNECTOR.** Measure the resistance between ECM and chassis ground. ***Connector & terminal*** ***(B134) No. 5 — Chassis ground:*** ***(B134) No. 14 — Chassis ground:***	Is the resistance 1 MΩ or more?	Go to step **3**.	Repair the short circuit to ground in harness between ECM and oil flow control solenoid valve LH connector.
3	**CHECK OIL FLOW CONTROL SOLENOID VALVE.** Measure the resistance between oil flow control solenoid valve terminals. ***Terminals*** ***No. 1 — No. 2:***	Is the resistance 6 — 12 Ω?	Repair the poor contact of ECM and oil flow control solenoid valve LH connector.	Replace the oil flow control solenoid valve LH. <Ref. to FU(H4DOTC)-49, Oil Flow Control Solenoid Valve.>

DK:DTC P2095 EXHAUST CAMSHAFT POSITION ACTUATOR CONTROL CIRCUIT HIGH (BANK 2)

DTC DETECTING CONDITION:

- Immediately at fault recognition
- GENERAL DESCRIPTION <Ref. to GD(H4DOTC)-198, DTC P2095 EXHAUST CAMSHAFT POSITION ACTUATOR CONTROL CIRCUIT HIGH (BANK 2), Diagnostic Trouble Code (DTC) Detecting Criteria.>

TROUBLE SYMPTOM:

Improper idling

CAUTION:

After servicing or replacing faulty parts, perform Clear Memory Mode <Ref. to EN(H4DOTC)(diag)-55, OPERATION, Clear Memory Mode.>, and Inspection Mode <Ref. to EN(H4DOTC)(diag)-44, PROCEDURE, Inspection Mode.>.

WIRING DIAGRAM:

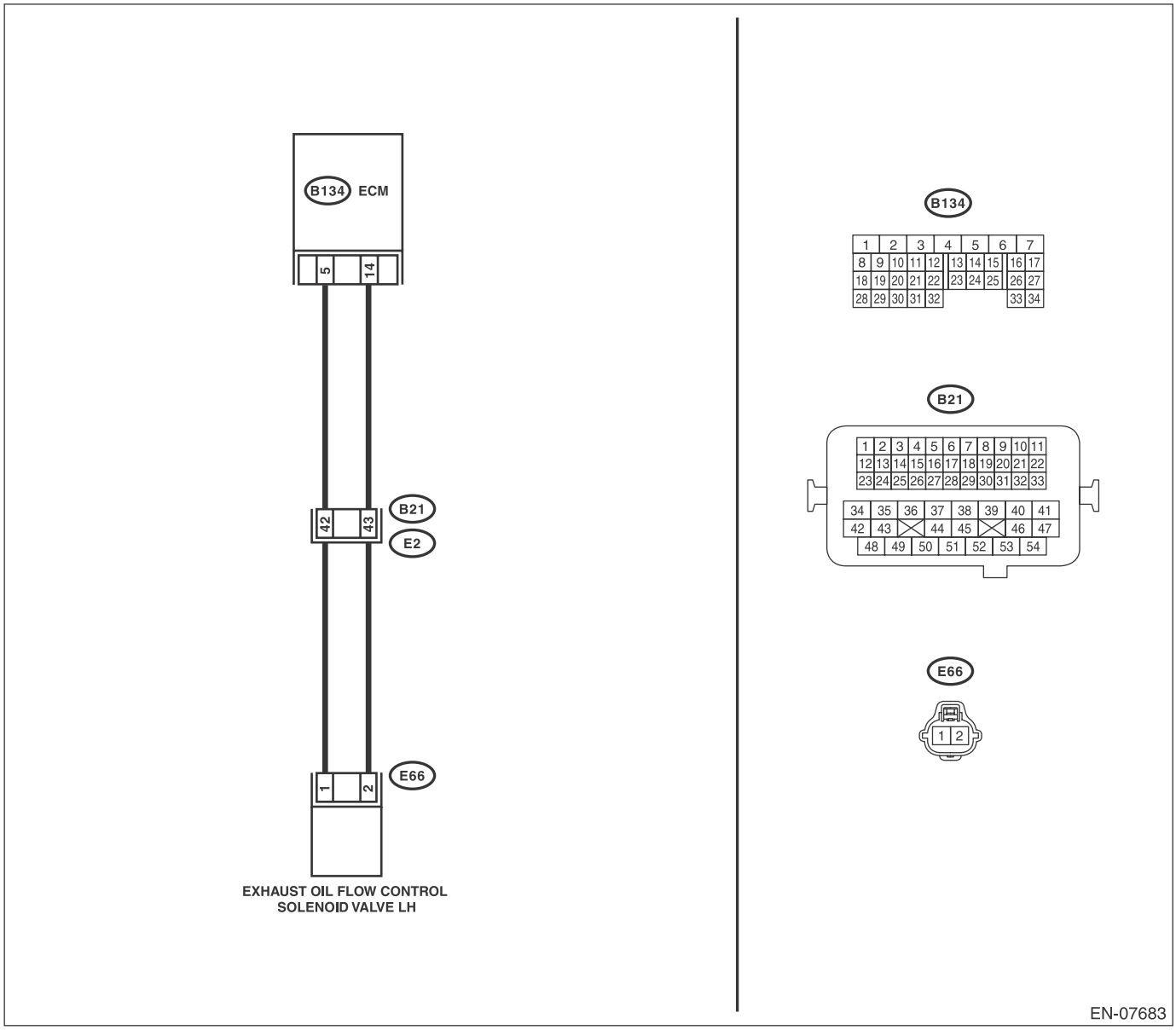

	Step	Check	Yes	No
1	**CHECK HARNESS BETWEEN ECM AND OIL FLOW CONTROL SOLENOID VALVE LH CONNECTOR.** 1) Turn the ignition switch to OFF. 2) Disconnect the connectors from ECM and oil flow control solenoid valve LH. 3) Measure the voltage between ECM and chassis ground. ***Connector & terminal*** ***(B134) No. 5 (+) — Chassis ground (–):*** ***(B134) No. 14 (+) — Chassis ground (–):***	Is the voltage less than 1 V?	Go to step **2**.	Repair the short circuit to power supply in harness between ECM and oil flow control solenoid valve LH connector.
2	**CHECK HARNESS BETWEEN ECM AND OIL FLOW CONTROL SOLENOID VALVE LH CONNECTOR.** Measure the resistance of harness between ECM and oil flow control solenoid valve LH connector. ***Connector & terminal*** ***(B134) No. 5 — (E66) No. 1:*** ***(B134) No. 14 — (E66) No. 2:***	Is the resistance less than 1 Ω?	Go to step **3**.	Repair the harness and connector. NOTE: In this case, repair the following item: • Open circuit in harness between ECM and oil flow control solenoid valve RH connector • Poor contact of coupling connector
3	**CHECK OIL FLOW CONTROL SOLENOID VALVE.** Measure the resistance between oil flow control solenoid valve terminals. ***Terminals*** ***No. 1 — No. 2:***	Is the resistance 6 — 12 Ω?	Repair the poor contact of ECM and oil flow control solenoid valve LH connector.	Replace the oil flow control solenoid valve LH. <Ref. to FU(H4DOTC)-49, Oil Flow Control Solenoid Valve.>

DL:DTC P2096 POST CATALYST FUEL TRIM SYSTEM TOO LEAN (BANK 1)

DTC DETECTING CONDITION:

- Detected when two consecutive driving cycles with fault occur.
- GENERAL DESCRIPTION <Ref. to GD(H4DOTC)-199, DTC P2096 POST CATALYST FUEL TRIM SYSTEM TOO LEAN (BANK 1), Diagnostic Trouble Code (DTC) Detecting Criteria.>

CAUTION:
After servicing or replacing faulty parts, perform Clear Memory Mode <Ref. to EN(H4DOTC)(diag)-55, OPERATION, Clear Memory Mode.>, and Inspection Mode <Ref. to EN(H4DOTC)(diag)-44, PROCEDURE, Inspection Mode.>.

WIRING DIAGRAM:

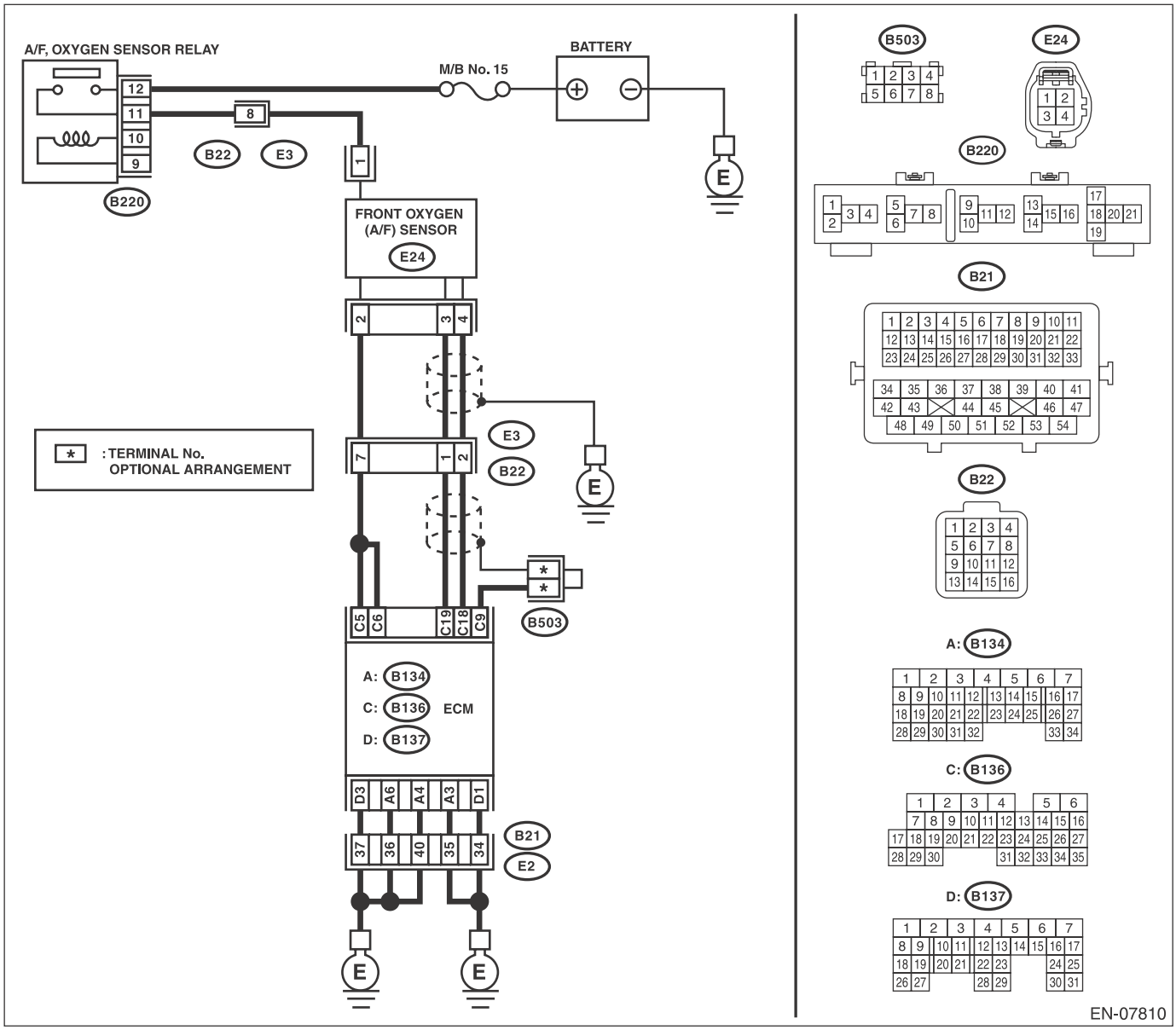

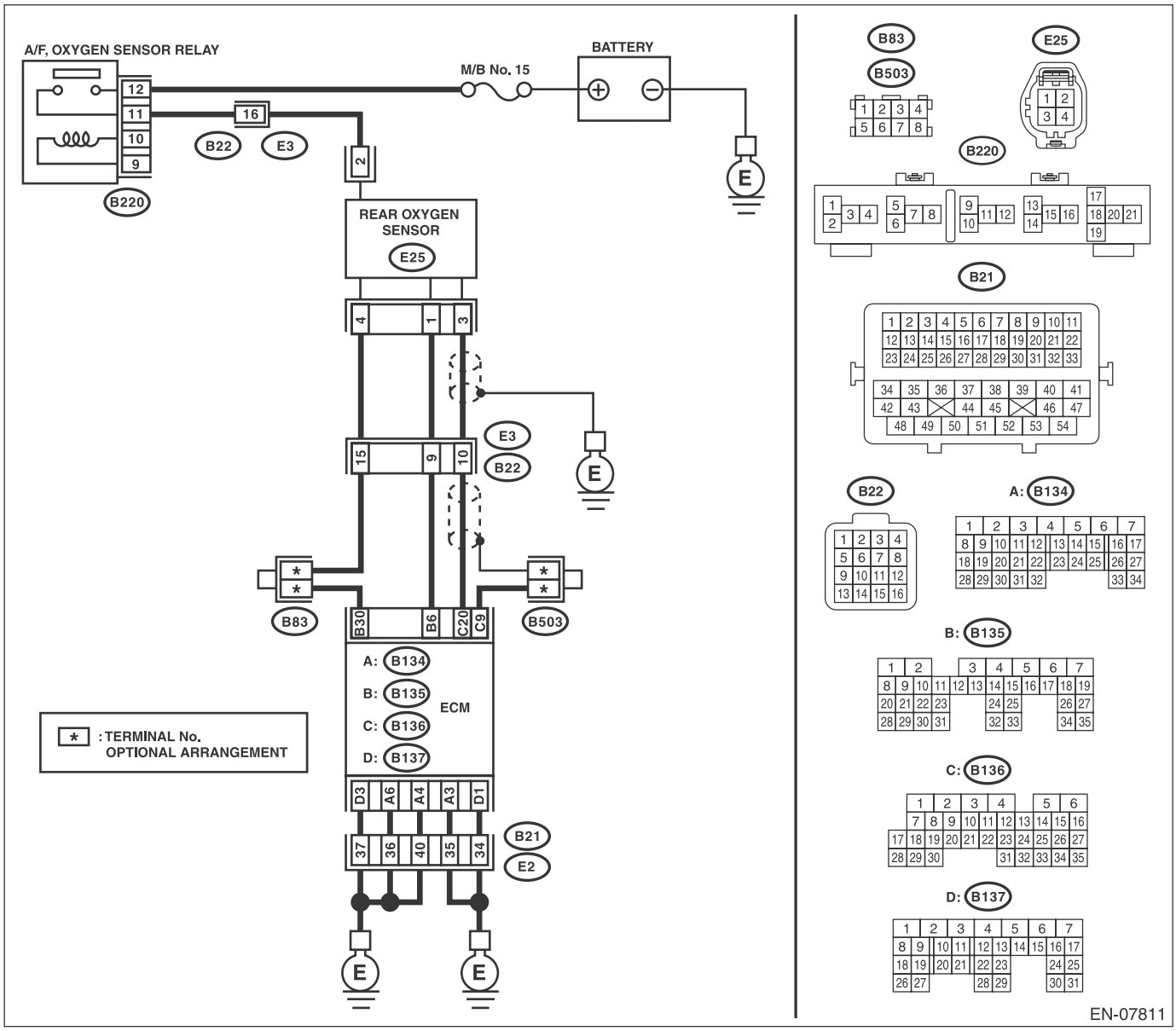

Step		Check	Yes	No
1	**CHECK FOR ANY OTHER DTC ON DISPLAY.**	Is any other DTC displayed?	Check DTC using "List of Diagnostic Trouble Code (DTC)". <Ref. to EN(H4DOTC)(diag)-78, List of Diagnostic Trouble Code (DTC).>	Go to step **2**.
2	**CHECK FRONT OXYGEN (A/F) SENSOR CONNECTOR AND COUPLING CONNECTOR.**	Has water entered the connector?	Completely remove any water inside.	Go to step **3**.

	Step	Check	Yes	No
3	**CHECK HARNESS BETWEEN ECM AND FRONT OXYGEN (A/F) SENSOR CONNECTOR.** 1) Turn the ignition switch to OFF. 2) Disconnect the connectors from ECM and front oxygen (A/F) sensor. 3) Measure the resistance of harness between ECM and front oxygen (A/F) sensor connector. ***Connector & terminal*** ***(B136) No. 19 — (E24) No. 3:*** ***(B136) No. 18 — (E24) No. 4:***	Is the resistance less than 1 Ω?	Go to step **4**.	Repair the harness and connector. NOTE: In this case, repair the following item: • Open circuit in harness between ECM and front oxygen (A/F) sensor connector • Poor contact of coupling connector
4	**CHECK HARNESS BETWEEN ECM AND FRONT OXYGEN (A/F) SENSOR CONNECTOR.** Measure the resistance between ECM and chassis ground. ***Connector & terminal*** ***(B136) No. 19 — Chassis ground:*** ***(B136) No. 18 — Chassis ground:***	Is the resistance 1 MΩ or more?	Go to step **5**.	Repair the ground short circuit of harness between ECM and front oxygen (A/F) sensor connector.
5	**CHECK OUTPUT SIGNAL FOR ECM.** 1) Connect the connector to ECM. 2) Turn the ignition switch to ON. 3) Measure the voltage between front oxygen (A/F) sensor connector and chassis ground. ***Connector & terminal*** ***(E24) No. 3 (+) — Chassis ground (–):***	Is the voltage 4.5 V or more?	Go to step **7**.	Go to step **6**.
6	**CHECK OUTPUT SIGNAL FOR ECM.** Measure the voltage between front oxygen (A/F) sensor connector and chassis ground. ***Connector & terminal*** ***(E24) No. 4 (+) — Chassis ground (–):***	Is the voltage 4.95 V or more?	Go to step **7**.	Go to step **8**.
7	**CHECK OUTPUT SIGNAL FOR ECM.** Measure the voltage between front oxygen (A/F) sensor connector and chassis ground. ***Connector & terminal*** ***(E24) No. 3 (+) — Chassis ground (–):*** ***(E24) No. 4 (+) — Chassis ground (–):***	Is the voltage 8 V or more?	Repair the short circuit of harness to power supply between ECM and front oxygen (A/F) sensor connector. After repair, replace the ECM. <Ref. to FU(H4DOTC)-57, Engine Control Module (ECM).>	Repair the poor contact of ECM connector.
8	**CHECK EXHAUST SYSTEM.**	Are there holes or loose bolts on exhaust system?	Repair the exhaust system.	Go to step **9**.
9	**CHECK AIR INTAKE SYSTEM.**	Are there holes, loose bolts or disconnection of hose on air intake system?	Repair the air intake system.	Go to step **10**.

	Step	Check	Yes	No
10	**CHECK FUEL PRESSURE.** **WARNING:** **Place "NO OPEN FLAMES" signs near the working area.** **CAUTION:** **Be careful not to spill fuel.** 1) Connect the front oxygen (A/F) sensor connector. 2) Measure the fuel pressure while disconnecting pressure regulator vacuum hose from intake manifold. <Ref. to ME(H4DOTC)-26, INSPECTION, Fuel Pressure.> **CAUTION:** **Release fuel pressure before removing the fuel pressure gauge.** NOTE: If fuel pressure does not increase, squeeze the fuel return hose 2 to 3 times, then measure fuel pressure again.	Is the measured value 284 — 314 kPa (2.9 — 3.2 kgf/cm^2, 41 — 46 psi)?	Go to step **11**.	Repair the following item. Fuel pressure is too high: • Clogged fuel return line or bent hose Fuel pressure is too low: • Improper fuel pump discharge • Clogged fuel supply line
11	**CHECK FUEL PRESSURE.** After connecting the pressure regulator vacuum hose, measure fuel pressure. <Ref. to ME(H4DOTC)-26, INSPECTION, Fuel Pressure.> **CAUTION:** **Release fuel pressure before removing the fuel pressure gauge.** NOTE: • If fuel pressure does not increase, squeeze fuel return hose 2 to 3 times, then measure fuel pressure again. • If the measured value at this step is out of specification, check or replace pressure regulator and pressure regulator vacuum hose.	Is the measured value 230 — 260 kPa (2.35 — 2.65 kgf/cm^2, 33 — 38 psi)?	Go to step **12**.	Repair the following item. Fuel pressure is too high: • Faulty pressure regulator • Clogged fuel return line or bent hose Fuel pressure is too low: • Faulty pressure regulator • Improper fuel pump discharge • Clogged fuel supply line
12	**CHECK ENGINE COOLANT TEMPERATURE SENSOR.** 1) Start the engine and warm up completely. 2) Read the data of engine coolant temperature sensor signal using Subaru Select Monitor or general scan tool. NOTE: • Subaru Select Monitor For detailed operation procedures, refer to "READ CURRENT DATA FOR ENGINE". <Ref. to EN(H4DOTC)(diag)-37, Subaru Select Monitor.> • General scan tool For detailed operation procedures, refer to the general scan tool operation manual.	Is the temperature 75°C (167°F) or more?	Go to step **13**.	Replace the engine coolant temperature sensor. <Ref. to FU(H4DOTC)-32, Engine Coolant Temperature Sensor.>

	Step	Check	Yes	No
13	**CHECK MASS AIR FLOW AND INTAKE AIR TEMPERATURE SENSOR.** 1) Start the engine and warm up engine until coolant temperature is higher than 75°C (167°F). 2) Place the shift lever in neutral position. 3) Turn the A/C switch to OFF. 4) Turn all the accessory switches to OFF. 5) Read the data of mass air flow and intake air temperature sensor signal using Subaru Select Monitor or general scan tool. NOTE: • Subaru Select Monitor For detailed operation procedures, refer to "READ CURRENT DATA FOR ENGINE". <Ref. to EN(H4DOTC)(diag)-37, Subaru Select Monitor.> • General scan tool For detailed operation procedures, refer to the general scan tool operation manual.	Is the measured value 2.0 — 5.0 g/s (0.26 — 0.66 lb/s)?	Go to step **14**.	Replace the mass air flow and intake air temperature sensor. <Ref. to FU(H4DOTC)-40, Mass Air Flow and Intake Air Temperature Sensor.>
14	**CHECK MASS AIR FLOW AND INTAKE AIR TEMPERATURE SENSOR.** 1) Start the engine and warm up engine until coolant temperature is higher than 75°C (167°F). 2) Place the shift lever in neutral position. 3) Turn the A/C switch to OFF. 4) Turn all the accessory switches to OFF. 5) Open the front hood. 6) Measure the ambient temperature. 7) Read the data of mass air flow and intake air temperature sensor signal using Subaru Select Monitor or general scan tool. NOTE: • Subaru Select Monitor For detailed operation procedures, refer to "READ CURRENT DATA FOR ENGINE". <Ref. to EN(H4DOTC)(diag)-37, Subaru Select Monitor.> • General scan tool For detailed operation procedures, refer to the general scan tool operation manual.	Subtract ambient temperature from intake air temperature. Is the obtained value –10 — 50°C (–18 — 90°F)?	Go to step **15**.	Check the mass air flow and intake air temperature sensor. <Ref. to FU(H4DOTC)-40, Mass Air Flow and Intake Air Temperature Sensor.>
15	**CHECK REAR OXYGEN SENSOR DATA.** 1) Warm up the engine until engine coolant temperature is above 75°C (167°F), and keep the engine speed at 3,000 rpm. (2 minutes maximum) 2) Read the data of rear oxygen sensor signal using Subaru Select Monitor or general scan tool. NOTE: • Depress the clutch pedal. • Subaru Select Monitor For detailed operation procedures, refer to "READ CURRENT DATA FOR ENGINE". <Ref. to EN(H4DOTC)(diag)-37, Subaru Select Monitor.> • General scan tool For detailed operation procedures, refer to the general scan tool operation manual.	Is the voltage 490 mV or more?	Go to step **16**.	Go to step **17**.

	Step	Check	Yes	No
16	**CHECK REAR OXYGEN SENSOR DATA.** 1) Warm up the engine until engine coolant temperature is above 75°C (167°F), and rapidly reduce the engine speed from 3,000 rpm. 2) Read the data of rear oxygen sensor signal using Subaru Select Monitor or general scan tool. NOTE: • Depress the clutch pedal. • Subaru Select Monitor For detailed operation procedures, refer to "READ CURRENT DATA FOR ENGINE". <Ref. to EN(H4DOTC)(diag)-37, Subaru Select Monitor.> • General scan tool For detailed operation procedures, refer to the general scan tool operation manual.	Is the voltage 250 mV or less?	Go to step **18**.	Go to step **17**.
17	**CHECK REAR OXYGEN SENSOR CONNECTOR AND COUPLING CONNECTOR.**	Has water entered the connector?	Completely remove any water inside.	Go to step **19**.
18	**CHECK FRONT OXYGEN (A/F) SENSOR USING REAR OXYGEN SENSOR SIGNAL.** 1) Warm up the engine until engine coolant temperature is higher than 75°C (167°F), then keep the engine idling for 5 minutes or more. 2) Read the data of rear oxygen sensor signal using Subaru Select Monitor or general scan tool. NOTE: • Subaru Select Monitor For detailed operation procedures, refer to "READ CURRENT DATA FOR ENGINE". <Ref. to EN(H4DOTC)(diag)-37, Subaru Select Monitor.> • General scan tool For detailed operation procedures, refer to the general scan tool operation manual.	Is a voltage of 250 mV or less maintained for 5 minutes or more?	Replace the front oxygen (A/F) sensor. <Ref. to FU(H4DOTC)-53, Front Oxygen (A/F) Sensor.>	Go to step **19**.
19	**CHECK HARNESS BETWEEN ECM AND REAR OXYGEN SENSOR CONNECTOR.** 1) Turn the ignition switch to OFF. 2) Disconnect the connector from ECM and rear oxygen sensor. 3) Measure the resistance of harness between ECM and rear oxygen sensor connector. ***Connector & terminal*** ***(B136) No. 20 — (E25) No. 3:*** ***(B135) No. 30 — (E25) No. 4:***	Is the resistance less than 1 Ω?	Go to step **20**.	Repair the harness and connector. NOTE: In this case, repair the following item: • Open circuit in harness between ECM and rear oxygen sensor connector • Poor contact of coupling connector

	Step	Check	Yes	No
20	**CHECK HARNESS BETWEEN ECM AND REAR OXYGEN SENSOR CONNECTOR.** 1) Connect the connector to ECM. 2) Turn the ignition switch to ON. 3) Measure the voltage between rear oxygen sensor connector and chassis ground. ***Connector & terminal*** ***(E25) No. 3 (+) — Chassis ground (–):***	Is the voltage 0.2 — 0.5 V?	Replace the rear oxygen sensor. <Ref. to FU(H4DOTC)-55, Rear Oxygen Sensor.>	Repair the harness and connector. NOTE: In this case, repair the following item: • Open circuit in harness between ECM and rear oxygen sensor connector • Poor contact of ECM connector • Poor contact of coupling connector

DM:DTC P2097 POST CATALYST FUEL TRIM SYSTEM TOO RICH (BANK 1)

DTC DETECTING CONDITION:

- Detected when two consecutive driving cycles with fault occur.
- GENERAL DESCRIPTION <Ref. to GD(H4DOTC)-201, DTC P2097 POST CATALYST FUEL TRIM SYSTEM TOO RICH (BANK 1), Diagnostic Trouble Code (DTC) Detecting Criteria.>

CAUTION:
After servicing or replacing faulty parts, perform Clear Memory Mode <Ref. to EN(H4DOTC)(diag)-55, OPERATION, Clear Memory Mode.>, and Inspection Mode <Ref. to EN(H4DOTC)(diag)-44, PROCEDURE, Inspection Mode.>.

WIRING DIAGRAM:

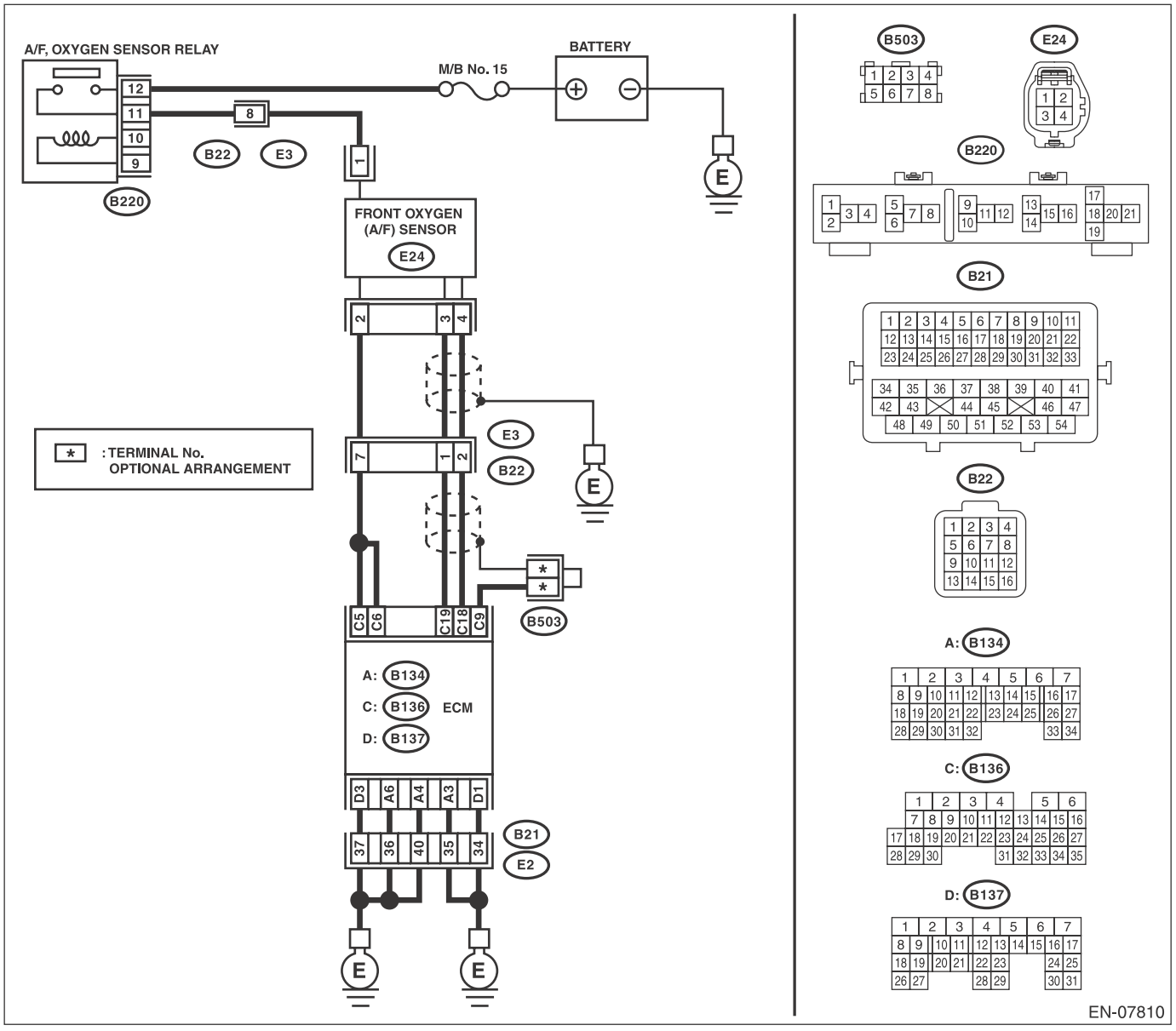

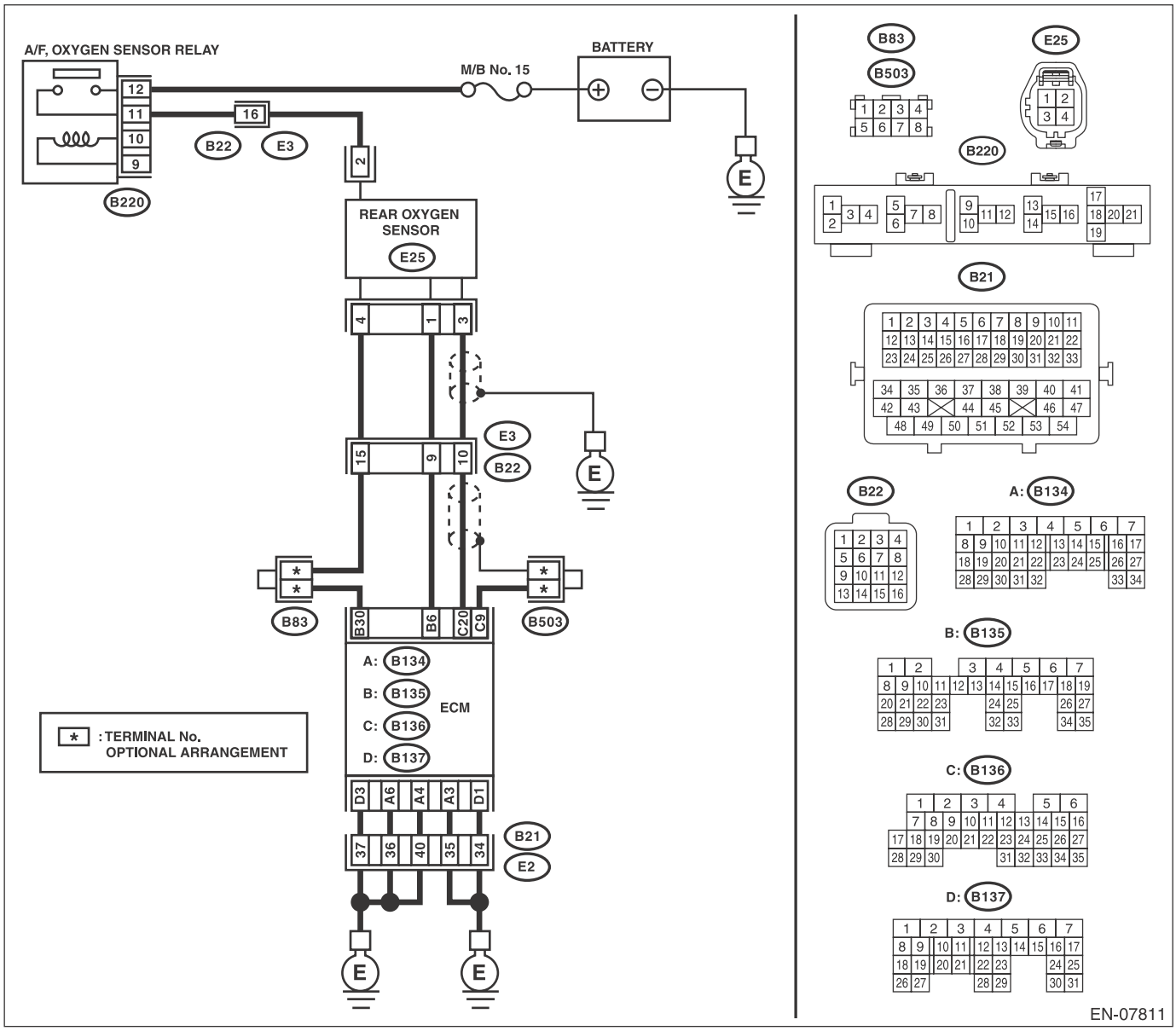

Step		Check	Yes	No
1	**CHECK FOR ANY OTHER DTC ON DISPLAY.**	Is any other DTC displayed?	Check DTC using "List of Diagnostic Trouble Code (DTC)". <Ref. to EN(H4DOTC)(diag)-78, List of Diagnostic Trouble Code (DTC).>	Go to step **2**.
2	**CHECK FRONT OXYGEN (A/F) SENSOR CONNECTOR AND COUPLING CONNECTOR.**	Has water entered the connector?	Completely remove any water inside.	Go to step **3**.

Step		Check	Yes	No
3	**CHECK HARNESS BETWEEN ECM AND FRONT OXYGEN (A/F) SENSOR CONNECTOR.** 1) Turn the ignition switch to OFF. 2) Disconnect the connectors from ECM and front oxygen (A/F) sensor. 3) Measure the resistance of harness between ECM and front oxygen (A/F) sensor connector. ***Connector & terminal*** ***(B136) No. 19 — (E24) No. 3:*** ***(B136) No. 18 — (E24) No. 4:***	Is the resistance less than 1 Ω?	Go to step **4**.	Repair the harness and connector. NOTE: In this case, repair the following item: • Open circuit in harness between ECM and front oxygen (A/F) sensor connector • Poor contact of coupling connector
4	**CHECK HARNESS BETWEEN ECM AND FRONT OXYGEN (A/F) SENSOR CONNECTOR.** Measure the resistance between ECM and chassis ground. ***Connector & terminal*** ***(B136) No. 19 — Chassis ground:*** ***(B136) No. 18 — Chassis ground:***	Is the resistance 1 MΩ or more?	Go to step **5**.	Repair the ground short circuit of harness between ECM and front oxygen (A/F) sensor connector.
5	**CHECK OUTPUT SIGNAL FOR ECM.** 1) Connect the connector to ECM. 2) Turn the ignition switch to ON. 3) Measure the voltage between front oxygen (A/F) sensor connector and chassis ground. ***Connector & terminal*** ***(E24) No. 3 (+) — Chassis ground (–):***	Is the voltage 4.5 V or more?	Go to step **7**.	Go to step **6**.
6	**CHECK OUTPUT SIGNAL FOR ECM.** Measure the voltage between front oxygen (A/F) sensor connector and chassis ground. ***Connector & terminal*** ***(E24) No. 4 (+) — Chassis ground (–):***	Is the voltage 4.95 V or more?	Go to step **7**.	Go to step **8**.
7	**CHECK OUTPUT SIGNAL FOR ECM.** Measure the voltage between front oxygen (A/F) sensor connector and chassis ground. ***Connector & terminal*** ***(E24) No. 3 (+) — Chassis ground (–):*** ***(E24) No. 4 (+) — Chassis ground (–):***	Is the voltage 8 V or more?	Repair the short circuit of harness to power supply between ECM and front oxygen (A/F) sensor connector. After repair, replace the ECM. <Ref. to FU(H4DOTC)-57, Engine Control Module (ECM).>	Repair the poor contact of ECM connector.
8	**CHECK EXHAUST SYSTEM.**	Are there holes or loose bolts on exhaust system?	Repair the exhaust system.	Go to step **9**.
9	**CHECK AIR INTAKE SYSTEM.**	Are there holes, loose bolts or disconnection of hose on air intake system?	Repair the air intake system.	Go to step **10**.

	Step	Check	Yes	No
10	**CHECK FUEL PRESSURE.** **WARNING:** **Place "NO OPEN FLAMES" signs near the working area.** **CAUTION:** **Be careful not to spill fuel.** 1) Connect the front oxygen (A/F) sensor connector. 2) Measure the fuel pressure while disconnecting pressure regulator vacuum hose from intake manifold. <Ref. to ME(H4DOTC)-26, INSPECTION, Fuel Pressure.> **CAUTION:** **Release fuel pressure before removing the fuel pressure gauge.** NOTE: If fuel pressure does not increase, squeeze the fuel return hose 2 to 3 times, then measure fuel pressure again.	Is the measured value 284 — 314 kPa (2.9 — 3.2 kgf/cm^2, 41 — 46 psi)?	Go to step **11**.	Repair the following item. Fuel pressure is too high: • Clogged fuel return line or bent hose Fuel pressure is too low: • Improper fuel pump discharge • Clogged fuel supply line
11	**CHECK FUEL PRESSURE.** After connecting the pressure regulator vacuum hose, measure fuel pressure. <Ref. to ME(H4DOTC)-26, INSPECTION, Fuel Pressure.> **CAUTION:** **Release fuel pressure before removing the fuel pressure gauge.** NOTE: • If fuel pressure does not increase, squeeze fuel return hose 2 to 3 times, then measure fuel pressure again. • If the measured value at this step is out of specification, check or replace pressure regulator and pressure regulator vacuum hose.	Is the measured value 230 — 260 kPa (2.35 — 2.65 kgf/cm^2, 33 — 38 psi)?	Go to step **12**.	Repair the following item. Fuel pressure is too high: • Faulty pressure regulator • Clogged fuel return line or bent hose Fuel pressure is too low: • Faulty pressure regulator • Improper fuel pump discharge • Clogged fuel supply line
12	**CHECK ENGINE COOLANT TEMPERATURE SENSOR.** 1) Start the engine and warm up completely. 2) Read the data of engine coolant temperature sensor signal using Subaru Select Monitor or general scan tool. NOTE: • Subaru Select Monitor For detailed operation procedures, refer to "READ CURRENT DATA FOR ENGINE". <Ref. to EN(H4DOTC)(diag)-37, Subaru Select Monitor.> • General scan tool For detailed operation procedures, refer to the general scan tool operation manual.	Is the temperature 75°C (167°F) or more?	Go to step **13**.	Replace the engine coolant temperature sensor. <Ref. to FU(H4DOTC)-32, Engine Coolant Temperature Sensor.>

	Step	Check	Yes	No
13	**CHECK MASS AIR FLOW AND INTAKE AIR TEMPERATURE SENSOR.** 1) Start the engine and warm up engine until coolant temperature is higher than 75°C (167°F). 2) Place the shift lever in neutral position. 3) Turn the A/C switch to OFF. 4) Turn all the accessory switches to OFF. 5) Read the data of mass air flow and intake air temperature sensor signal using Subaru Select Monitor or general scan tool. NOTE: • Subaru Select Monitor For detailed operation procedures, refer to "READ CURRENT DATA FOR ENGINE". <Ref. to EN(H4DOTC)(diag)-37, Subaru Select Monitor.> • General scan tool For detailed operation procedures, refer to the general scan tool operation manual.	Is the measured value 2.0 — 5.0 g/s (0.26 — 0.66 lb/s)?	Go to step **14**.	Replace the mass air flow and intake air temperature sensor. <Ref. to FU(H4DOTC)-40, Mass Air Flow and Intake Air Temperature Sensor.>
14	**CHECK MASS AIR FLOW AND INTAKE AIR TEMPERATURE SENSOR.** 1) Start the engine and warm up engine until coolant temperature is higher than 75°C (167°F). 2) Place the shift lever in neutral position. 3) Turn the A/C switch to OFF. 4) Turn all the accessory switches to OFF. 5) Open the front hood. 6) Measure the ambient temperature. 7) Read the data of mass air flow and intake air temperature sensor signal using Subaru Select Monitor or general scan tool. NOTE: • Subaru Select Monitor For detailed operation procedures, refer to "READ CURRENT DATA FOR ENGINE". <Ref. to EN(H4DOTC)(diag)-37, Subaru Select Monitor.> • General scan tool For detailed operation procedures, refer to the general scan tool operation manual.	Subtract ambient temperature from intake air temperature. Is the obtained value –10 — 50°C (–18 — 90°F)?	Go to step **15**.	Check the mass air flow and intake air temperature sensor. <Ref. to FU(H4DOTC)-40, Mass Air Flow and Intake Air Temperature Sensor.>
15	**CHECK REAR OXYGEN SENSOR DATA.** 1) Warm up the engine until engine coolant temperature is above 75°C (167°F), and keep the engine speed at 3,000 rpm. (2 minutes maximum) 2) Read the data of rear oxygen sensor signal using Subaru Select Monitor or general scan tool. NOTE: • Depress the clutch pedal. • Subaru Select Monitor For detailed operation procedures, refer to "READ CURRENT DATA FOR ENGINE". <Ref. to EN(H4DOTC)(diag)-37, Subaru Select Monitor.> • General scan tool For detailed operation procedures, refer to the general scan tool operation manual.	Is the voltage 490 mV or more?	Go to step **16**.	Go to step **17**.

	Step	Check	Yes	No
16	**CHECK REAR OXYGEN SENSOR DATA.** 1) Warm up the engine until engine coolant temperature is above 75°C (167°F), and rapidly reduce the engine speed from 3,000 rpm. 2) Read the data of rear oxygen sensor signal using Subaru Select Monitor or general scan tool. NOTE: • Depress the clutch pedal. • Subaru Select Monitor For detailed operation procedures, refer to "READ CURRENT DATA FOR ENGINE". <Ref. to EN(H4DOTC)(diag)-37, Subaru Select Monitor.> • General scan tool For detailed operation procedures, refer to the general scan tool operation manual.	Is the voltage 250 mV or less?	Go to step **18**.	Go to step **17**.
17	**CHECK REAR OXYGEN SENSOR CONNECTOR AND COUPLING CONNECTOR.**	Has water entered the connector?	Completely remove any water inside.	Go to step **19**.
18	**CHECK FRONT OXYGEN (A/F) SENSOR USING REAR OXYGEN SENSOR SIGNAL.** 1) Warm up the engine until engine coolant temperature is higher than 75°C (167°F), then keep the engine idling for 5 minutes or more. 2) Read the data of rear oxygen sensor signal using Subaru Select Monitor or general scan tool. NOTE: • Subaru Select Monitor For detailed operation procedures, refer to "READ CURRENT DATA FOR ENGINE". <Ref. to EN(H4DOTC)(diag)-37, Subaru Select Monitor.> • General scan tool For detailed operation procedures, refer to the general scan tool operation manual.	Is a voltage of 0.8 V or more maintained for 5 minutes or more?	Replace the front oxygen (A/F) sensor. <Ref. to FU(H4DOTC)-53, Front Oxygen (A/F) Sensor.>	Go to step **19**.
19	**CHECK HARNESS BETWEEN ECM AND REAR OXYGEN SENSOR CONNECTOR.** 1) Turn the ignition switch to OFF. 2) Disconnect the connector from ECM and rear oxygen sensor. 3) Measure the resistance of harness between ECM and rear oxygen sensor connector. ***Connector & terminal*** ***(B136) No. 20 — (E25) No. 3:*** ***(B135) No. 30 — (E25) No. 4:***	Is the resistance less than 1 Ω?	Go to step **20**.	Repair the harness and connector. NOTE: In this case, repair the following item: • Open circuit in harness between ECM and rear oxygen sensor connector • Poor contact of coupling connector

Step		Check	Yes	No
20	**CHECK HARNESS BETWEEN ECM AND REAR OXYGEN SENSOR CONNECTOR.** 1) Connect the connector to ECM. 2) Turn the ignition switch to ON. 3) Measure the voltage between rear oxygen sensor connector and chassis ground. ***Connector & terminal*** ***(E25) No. 3 (+) — Chassis ground (–):***	Is the voltage 0.2 — 0.5 V?	Replace the rear oxygen sensor. <Ref. to FU(H4DOTC)-55, Rear Oxygen Sensor.>	Repair the harness and connector. NOTE: In this case, repair the following item: • Open circuit in harness between ECM and rear oxygen sensor connector • Poor contact of ECM connector • Poor contact of coupling connector

DN:DTC P2101 THROTTLE ACTUATOR CONTROL MOTOR CIRCUIT RANGE/ PERFORMANCE

DTC DETECTING CONDITION:

- Immediately at fault recognition
- GENERAL DESCRIPTION <Ref. to GD(H4DOTC)-203, DTC P2101 THROTTLE ACTUATOR CONTROL MOTOR CIRCUIT RANGE/PERFORMANCE, Diagnostic Trouble Code (DTC) Detecting Criteria.>

TROUBLE SYMPTOM:

- Improper idling
- Poor driving performance
- Engine stalls.

CAUTION:

After servicing or replacing faulty parts, perform Clear Memory Mode <Ref. to EN(H4DOTC)(diag)-55, OPERATION, Clear Memory Mode.>, and Inspection Mode <Ref. to EN(H4DOTC)(diag)-44, PROCEDURE, Inspection Mode.>.

WIRING DIAGRAM:

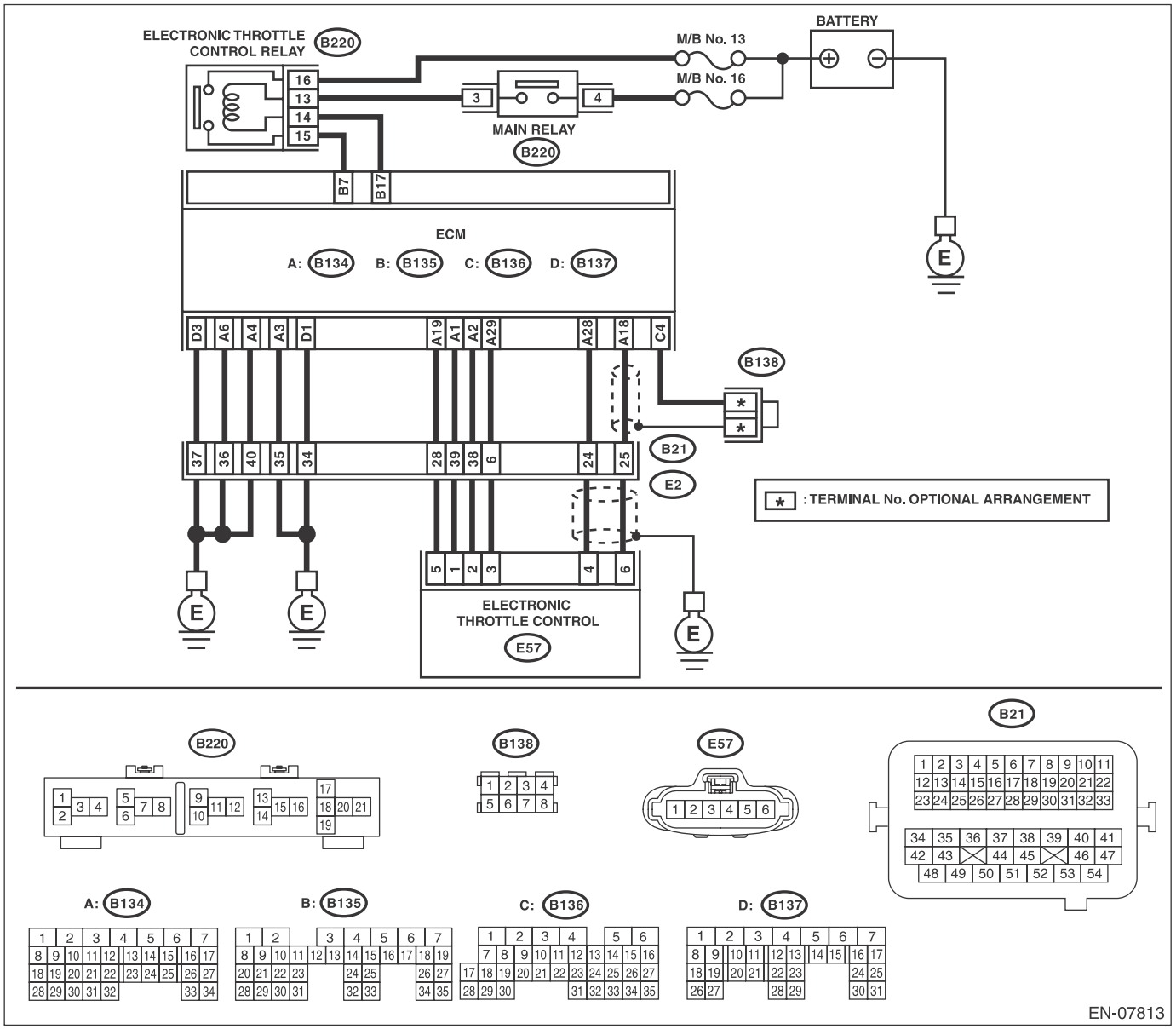

	Step	Check	Yes	No
1	**CHECK ELECTRONIC THROTTLE CONTROL RELAY.** 1) Turn the ignition switch to OFF. 2) Remove the electronic throttle control relay. 3) Connect the battery to terminals No. 13 and No. 14 of electronic throttle control relay. 4) Measure the resistance between electronic throttle control relay terminals. ***Terminals*** ***No. 16 — No. 15:***	Is the resistance less than 1 Ω?	Go to step **2**.	Replace the electronic throttle control relay. <Ref. to FU(H4DOTC)-62, Electronic Throttle Control Relay.>
2	**CHECK POWER SUPPLY OF ELECTRONIC THROTTLE CONTROL RELAY.** Measure the voltage between electronic throttle control relay connector and chassis ground. ***Connector & terminal*** ***(B220) No. 16 (+) — Chassis ground (–):***	Is the voltage 10 V or more?	Go to step **3**.	Repair the open or ground short circuit of power supply circuit.
3	**CHECK HARNESS BETWEEN ECM AND ELECTRONIC THROTTLE CONTROL RELAY CONNECTOR.** 1) Disconnect the connector from ECM. 2) Turn the ignition switch to ON. 3) Measure the voltage between electronic throttle control relay connector and chassis ground. ***Connector & terminal*** ***(B220) No. 14 (+) — Chassis ground (–):***	Is the voltage 10 V or more?	Repair the short circuit to power in the harness between ECM and electronic throttle control relay connector.	Go to step **4**.
4	**CHECK HARNESS BETWEEN ECM AND ELECTRONIC THROTTLE CONTROL RELAY CONNECTOR.** 1) Turn the ignition switch to OFF. 2) Measure the resistance between electronic throttle control relay connector and chassis ground. ***Connector & terminal*** ***(B220) No. 14 — Chassis ground:*** ***(B220) No. 15 — Chassis ground:***	Is the resistance 1 MΩ or more?	Go to step **5**.	Repair the short circuit in harness to ground between ECM and electronic throttle control relay connector.
5	**CHECK HARNESS BETWEEN ECM AND ELECTRONIC THROTTLE CONTROL RELAY CONNECTOR.** Measure the resistance between ECM and electronic throttle control relay connector. ***Connector & terminal*** ***(B135) No. 17 — (B220) No. 14:*** ***(B135) No. 7 — (B220) No. 15:***	Is the resistance less than 1 Ω?	Go to step **6**.	Repair the open circuit in harness between ECM and electronic throttle control relay connector.
6	**CHECK HARNESS BETWEEN ECM AND ELECTRONIC THROTTLE CONTROL CONNECTOR.** 1) Turn the ignition switch to OFF. 2) Disconnect the connectors from electronic throttle control. 3) Measure the resistance between ECM and chassis ground. ***Connector & terminal*** ***(B134) No. 19 — Chassis ground:*** ***(B134) No. 18 — Chassis ground:*** ***(B134) No. 18 — (B136) No. 4:*** ***(B134) No. 28 — Chassis ground:***	Is the resistance 1 MΩ or more?	Go to step **7**.	Repair the ground short circuit of harness between ECM and electronic throttle control connector.

	Step	Check	Yes	No
7	**CHECK SHORT CIRCUIT INSIDE THE ECM.** 1) Connect the connector to ECM. 2) Measure the resistance between electronic throttle control connector and engine ground. ***Connector & terminal*** ***(E57) No. 6 — Engine ground:*** ***(E57) No. 4 — Engine ground:***	Is the resistance 1 MΩ or more?	Go to step **8**.	Repair the ground short circuit of harness between ECM and electronic throttle control connector. Replace the ECM if defective. <Ref. to FU(H4DOTC)-57, Engine Control Module (ECM).>
8	**CHECK HARNESS BETWEEN ECM AND ELECTRONIC THROTTLE CONTROL CONNECTOR.** 1) Disconnect the connector from ECM. 2) Measure the resistance of harness between ECM and electronic throttle control connector. ***Connector & terminal*** ***(B134) No. 18 — (E57) No. 6:*** ***(B134) No. 28 — (E57) No. 4:*** ***(B134) No. 29 — (E57) No. 3:***	Is the resistance less than 1 Ω?	Go to step **9**.	Repair the harness and connector. NOTE: In this case, repair the following item: • Open circuit in harness between ECM and electronic throttle control connector • Poor contact of coupling connector
9	**CHECK HARNESS BETWEEN ECM AND ELECTRONIC THROTTLE CONTROL CONNECTOR.** 1) Connect the connector to ECM. 2) Measure the resistance between electronic throttle control connector and engine ground. ***Connector & terminal*** ***(E57) No. 3 — Engine ground:***	Is the resistance less than 5 Ω?	Go to step **10**.	Repair the harness and connector. NOTE: In this case, repair the following item: • Open circuit of harness between ECM and engine ground • Poor contact of ECM connector • Poor contact of coupling connector
10	**CHECK HARNESS BETWEEN ECM AND ELECTRONIC THROTTLE CONTROL CONNECTOR.** 1) Turn the ignition switch to ON. 2) Measure the voltage between electronic throttle control connector and engine ground. ***Connector & terminal*** ***(E57) No. 6 (+) — Engine ground (–):*** ***(E57) No. 4 (+) — Engine ground (–):***	Is the voltage 5 V or more?	Repair the short circuit of harness to power supply between ECM and electronic throttle control connector.	Go to step **11**.
11	**CHECK HARNESS BETWEEN ECM AND ELECTRONIC THROTTLE CONTROL CONNECTOR.** 1) Turn the ignition switch to OFF. 2) Disconnect the connector from ECM. 3) Measure the resistance between ECM connectors. ***Connector & terminal*** ***(B134) No. 19 — (B134) No. 18:*** ***(B134) No. 19 — (B134) No. 28:***	Is the resistance 1 MΩ or more?	Go to step **12**.	Repair the short circuit of harness to power supply between ECM and electronic throttle control connector.

	Step	Check	Yes	No
12	**CHECK SENSOR OUTPUT.** 1) Connect all connectors. 2) Turn the ignition switch to ON. 3) Read the data of main throttle sensor signal using Subaru Select Monitor. NOTE: For detailed operation procedures, refer to "READ CURRENT DATA FOR ENGINE". <Ref. to EN(H4DOTC)(diag)-37, Subaru Select Monitor.>	Is the voltage 0.81 — 0.87 V?	Go to step **13**.	Repair the poor contact of electronic throttle control connector. Replace the electronic throttle control if defective. <Ref. to FU(H4DOTC)-15, Throttle Body.>
13	**CHECK SENSOR OUTPUT.** Read the data of sub throttle sensor signal using Subaru Select Monitor. NOTE: Subaru Select Monitor For detailed operation procedures, refer to "READ CURRENT DATA FOR ENGINE". <Ref. to EN(H4DOTC)(diag)-37, Subaru Select Monitor.>	Is the voltage 1.64 — 1.70 V?	Go to step **14**.	Repair the poor contact of electronic throttle control connector. Replace the electronic throttle control if defective. <Ref. to FU(H4DOTC)-15, Throttle Body.>
14	**CHECK HARNESS BETWEEN ECM AND ELECTRONIC THROTTLE CONTROL MOTOR.** 1) Turn the ignition switch to OFF. 2) Disconnect the connectors from the ECM and electronic throttle control. 3) Measure the resistance between ECM and electronic throttle control connector. ***Connector & terminal*** ***(B134) No. 2 — (E57) No. 2:*** ***(B134) No. 1 — (E57) No. 1:***	Is the resistance less than 1 Ω?	Go to step **15**.	Repair the harness and connector. NOTE: In this case, repair the following item: • Open circuit in harness between ECM and electronic throttle control • Poor contact of coupling connector
15	**CHECK HARNESS BETWEEN ECM AND ELECTRONIC THROTTLE CONTROL MOTOR.** 1) Connect the connector to ECM. 2) Turn the ignition switch to ON. 3) Measure the voltage between electronic throttle control connector and engine ground. ***Connector & terminal*** ***(E57) No. 2 (+) — Engine ground (–):*** ***(E57) No. 1 (+) — Engine ground (–):***	Is the voltage 5 V or more?	Repair the short circuit of harness to power supply between ECM and electronic throttle control connector.	Go to step **16**.
16	**CHECK HARNESS BETWEEN ECM AND ELECTRONIC THROTTLE CONTROL MOTOR.** 1) Turn the ignition switch to OFF. 2) Disconnect the connector from ECM. 3) Measure the resistance between electronic throttle control connector and engine ground. ***Connector & terminal*** ***(E57) No. 2 — Engine ground:*** ***(E57) No. 1 — Engine ground:***	Is the resistance 1 MΩ or more?	Go to step **17**.	Repair the ground short circuit of harness between ECM and electronic throttle control connector.
17	**CHECK ELECTRONIC THROTTLE CONTROL MOTOR HARNESS.** Measure the resistance between electronic throttle control connectors. ***Connector & terminal*** ***(E57) No. 2 — (E57) No. 1:***	Is the resistance 1 MΩ or more?	Go to step **18**.	Repair the short circuit of harness between ECM and electronic throttle control connector.

	Step	Check	Yes	No
18	**CHECK ELECTRONIC THROTTLE CONTROL GROUND CIRCUIT.** Measure the resistance between ECM and chassis ground. ***Connector & terminal*** ***(B134) No. 3 — Chassis ground:*** ***(B134) No. 4 — Chassis ground:*** ***(B134) No. 6 — Chassis ground:*** ***(B137) No. 1 — Chassis ground:*** ***(B137) No. 3 — Chassis ground:***	Is the resistance less than 5 Ω?	Go to step **19**.	Repair the harness and connector. NOTE: In this case, repair the following item: • Open circuit of harness between ECM and engine ground • Poor contact of coupling connector
19	**CHECK ELECTRONIC THROTTLE CONTROL.** Measure the resistance between electronic throttle control terminals. ***Terminals*** ***No. 2 — No. 1:***	Is the resistance 50 Ω or less?	Go to step **20**.	Replace the electronic throttle control. <Ref. to FU(H4DOTC)-15, Throttle Body.>
20	**CHECK ELECTRONIC THROTTLE CONTROL.** Move the throttle valve to the fully open and fully closed positions with fingers. Check that the valve returns to the specified position when releasing fingers.	Does the valve return to the specified position? Standard value: 3 mm (0.12 in) from fully closed position	Repair the poor contact of ECM connector.	Replace the electronic throttle control. <Ref. to FU(H4DOTC)-15, Throttle Body.>

DO:DTC P2102 THROTTLE ACTUATOR CONTROL MOTOR CIRCUIT LOW

DTC DETECTING CONDITION:

- Immediately at fault recognition
- GENERAL DESCRIPTION <Ref. to GD(H4DOTC)-205, DTC P2102 THROTTLE ACTUATOR CONTROL MOTOR CIRCUIT LOW, Diagnostic Trouble Code (DTC) Detecting Criteria.>

TROUBLE SYMPTOM:

- Improper idling
- Poor driving performance
- Engine stalls.

CAUTION:
After servicing or replacing faulty parts, perform Clear Memory Mode <Ref. to EN(H4DOTC)(diag)-55, OPERATION, Clear Memory Mode.>, and Inspection Mode <Ref. to EN(H4DOTC)(diag)-44, PROCEDURE, Inspection Mode.>.

WIRING DIAGRAM:

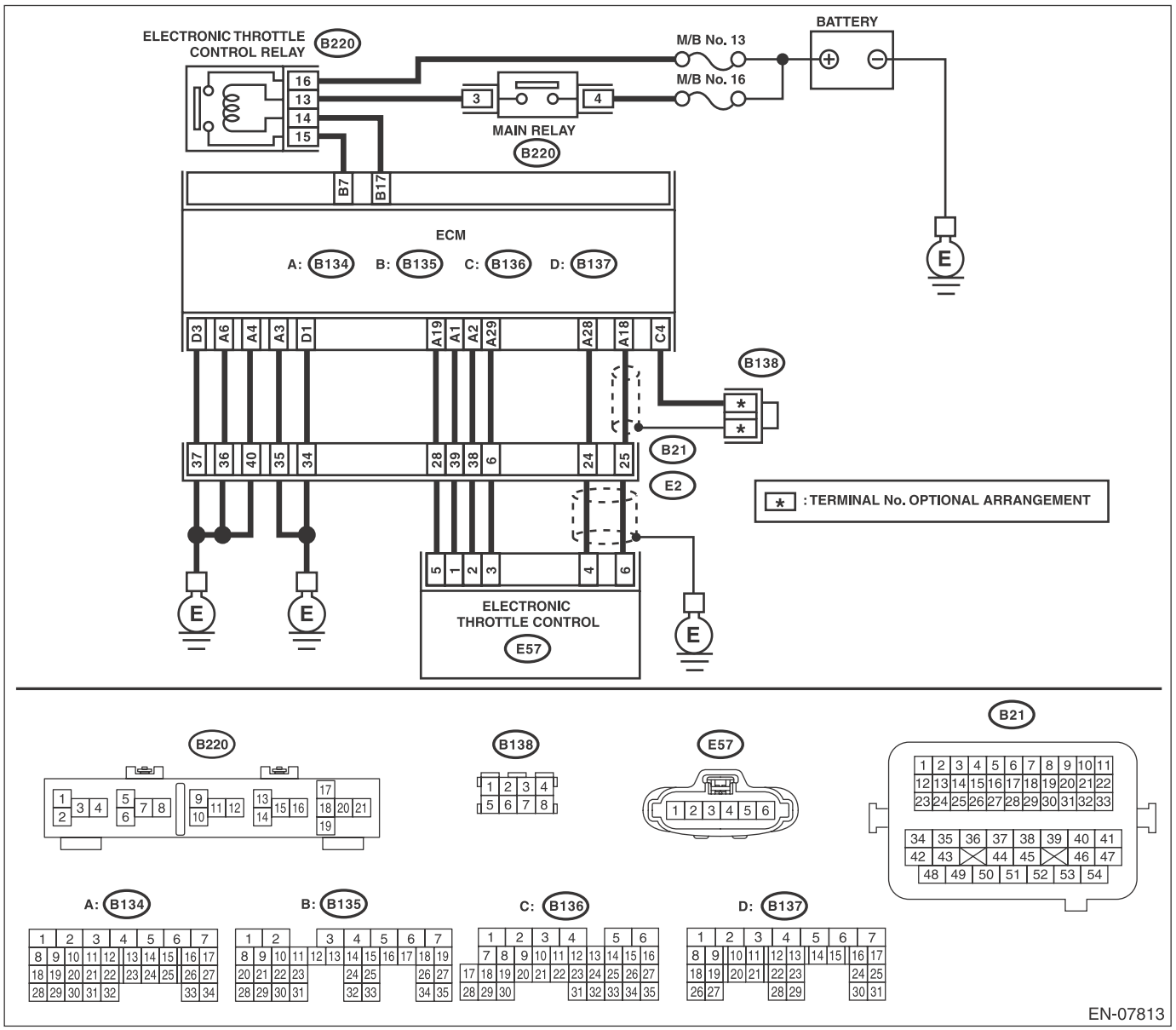

	Step	Check	Yes	No
1	**CHECK ELECTRONIC THROTTLE CONTROL RELAY.** 1) Turn the ignition switch to OFF. 2) Remove the electronic throttle control relay. 3) Connect the battery to terminals No. 13 and No. 14 of electronic throttle control relay. 4) Measure the resistance between electronic throttle control relay terminals. ***Terminals*** ***No. 16 — No. 15:***	Is the resistance less than 1 Ω?	Go to step **2**.	Replace the electronic throttle control relay. <Ref. to FU(H4DOTC)-62, Electronic Throttle Control Relay.>
2	**CHECK POWER SUPPLY OF ELECTRONIC THROTTLE CONTROL RELAY.** Measure the voltage between electronic throttle control relay connector and chassis ground. ***Connector & terminal*** ***(B220) No. 16 (+) — Chassis ground (–):***	Is the voltage 10 V or more?	Go to step **3**.	Repair the open or ground short circuit of power supply circuit.
3	**CHECK HARNESS BETWEEN ECM AND ELECTRONIC THROTTLE CONTROL RELAY CONNECTOR.** 1) Disconnect the connector from ECM. 2) Turn the ignition switch to ON. 3) Measure the voltage between electronic throttle control relay connector and chassis ground. ***Connector & terminal*** ***(B220) No. 14 (+) — Chassis ground (–):***	Is the voltage 10 V or more?	Repair the short circuit to power in the harness between ECM and electronic throttle control relay connector.	Go to step **4**.
4	**CHECK HARNESS BETWEEN ECM AND ELECTRONIC THROTTLE CONTROL RELAY CONNECTOR.** 1) Turn the ignition switch to OFF. 2) Measure the resistance between electronic throttle control relay connector and chassis ground. ***Connector & terminal*** ***(B220) No. 14 — Chassis ground:*** ***(B220) No. 15 — Chassis ground:***	Is the resistance 1 MΩ or more?	Go to step **5**.	Repair the short circuit in harness to ground between ECM and electronic throttle control relay connector.
5	**CHECK HARNESS BETWEEN ECM AND ELECTRONIC THROTTLE CONTROL RELAY CONNECTOR.** Measure the resistance between ECM and electronic throttle control relay connector. ***Connector & terminal*** ***(B135) No. 17 — (B220) No. 14:*** ***(B135) No. 7 — (B220) No. 15:***	Is the resistance less than 1 Ω?	Repair the poor contact of ECM connector.	Repair the open circuit in harness between ECM and electronic throttle control relay connector.

DP:DTC P2103 THROTTLE ACTUATOR CONTROL MOTOR CIRCUIT HIGH

DTC DETECTING CONDITION:

- Immediately at fault recognition
- GENERAL DESCRIPTION <Ref. to GD(H4DOTC)-207, DTC P2103 THROTTLE ACTUATOR CONTROL MOTOR CIRCUIT HIGH, Diagnostic Trouble Code (DTC) Detecting Criteria.>

CAUTION:

After servicing or replacing faulty parts, perform Clear Memory Mode <Ref. to EN(H4DOTC)(diag)-55, OPERATION, Clear Memory Mode.>, and Inspection Mode <Ref. to EN(H4DOTC)(diag)-44, PROCEDURE, Inspection Mode.>.

WIRING DIAGRAM:

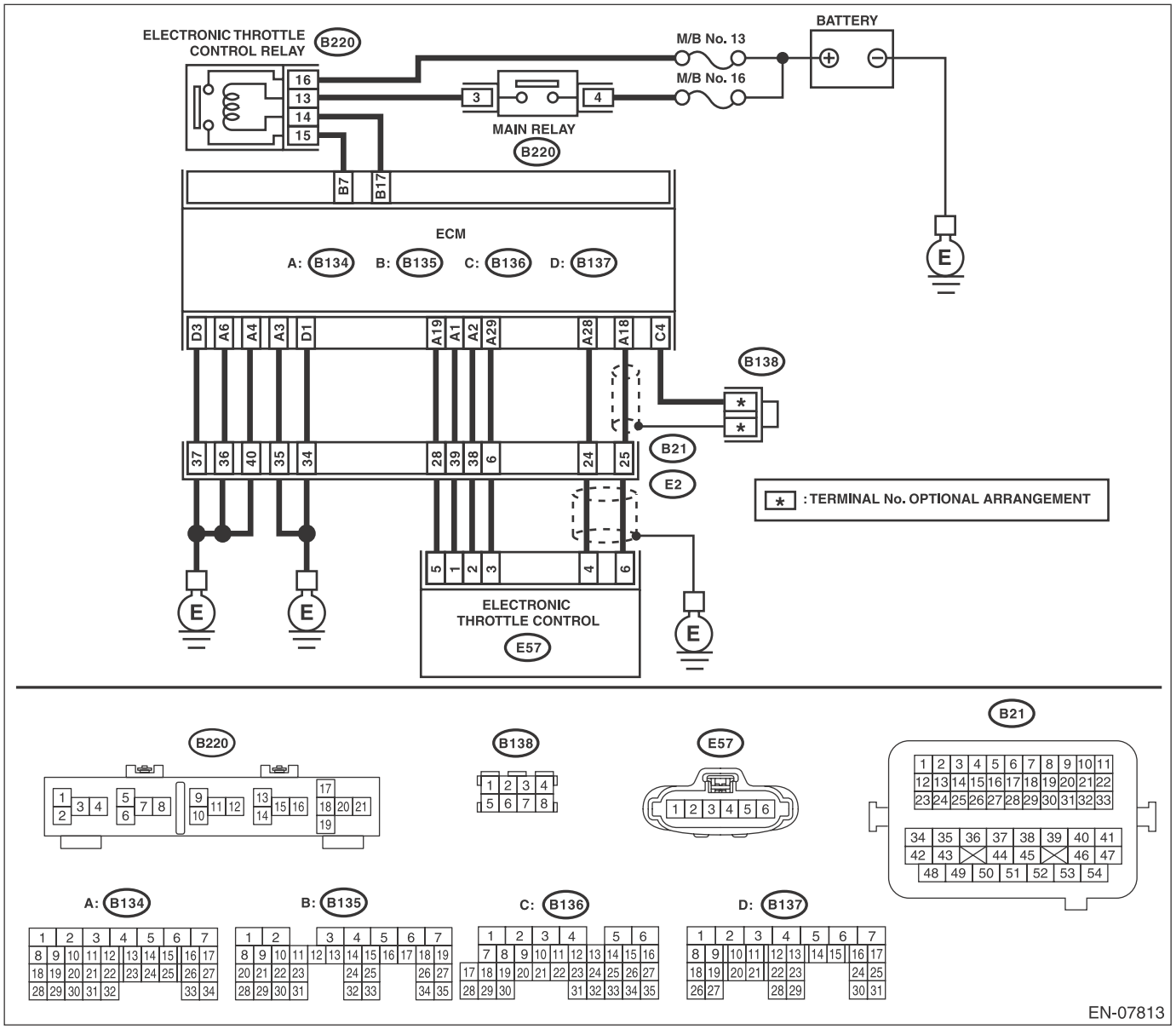

	Step	Check	Yes	No
1	**CHECK ELECTRONIC THROTTLE CONTROL RELAY.** 1) Turn the ignition switch to OFF. 2) Remove the electronic throttle control relay. 3) Measure the resistance between electronic throttle control relay terminals. ***Terminals*** ***No. 16 — No. 15:***	Is the resistance 1 MΩ or more?	Go to step **2**.	Replace the electronic throttle control relay. <Ref. to FU(H4DOTC)-62, Electronic Throttle Control Relay.>
2	**CHECK SHORT CIRCUIT OF ELECTRONIC THROTTLE CONTROL RELAY POWER SUPPLY.** 1) Turn the ignition switch to ON. 2) Measure the voltage between electronic throttle control relay connector and chassis ground. ***Connector & terminal*** ***(B220) No. 15 (+) — Chassis ground (–):***	Is the voltage 10 V or more?	Repair the short circuit to power in the harness between ECM and electronic throttle control relay connector.	Go to step **3**.
3	**CHECK HARNESS BETWEEN ECM AND ELECTRONIC THROTTLE CONTROL RELAY CONNECTOR.** 1) Turn the ignition switch to OFF. 2) Disconnect the connector from ECM. 3) Measure the resistance between ECM and chassis ground. ***Connector & terminal*** ***(B135) No. 17 — Chassis ground:***	Is the resistance 1 MΩ or more?	Repair the poor contact of ECM connector.	Repair the short circuit in harness to ground between ECM and electronic throttle control relay connector.

DQ:DTC P2109 THROTTLE/PEDAL POSITION SENSOR “A” MINIMUM STOP PERFORMANCE

NOTE:
For the diagnostic procedure, refer to DTC P2101. <Ref. to EN(H4DOTC)(diag)-309, DTC P2101 THROTTLE ACTUATOR CONTROL MOTOR CIRCUIT RANGE/PERFORMANCE, Diagnostic Procedure with Diagnostic Trouble Code (DTC).>

DR:DTC P2122 THROTTLE/PEDAL POSITION SENSOR/SWITCH “D” CIRCUIT LOW INPUT

DTC DETECTING CONDITION:

- Immediately at fault recognition
- GENERAL DESCRIPTION <Ref. to GD(H4DOTC)-211, DTC P2122 THROTTLE/PEDAL POSITION SENSOR/SWITCH “D” CIRCUIT LOW INPUT, Diagnostic Trouble Code (DTC) Detecting Criteria.>

TROUBLE SYMPTOM:

- Improper idling
- Poor driving performance

CAUTION:

After servicing or replacing faulty parts, perform Clear Memory Mode <Ref. to EN(H4DOTC)(diag)-55, OPERATION, Clear Memory Mode.>, and Inspection Mode <Ref. to EN(H4DOTC)(diag)-44, PROCEDURE, Inspection Mode.>.

WIRING DIAGRAM:

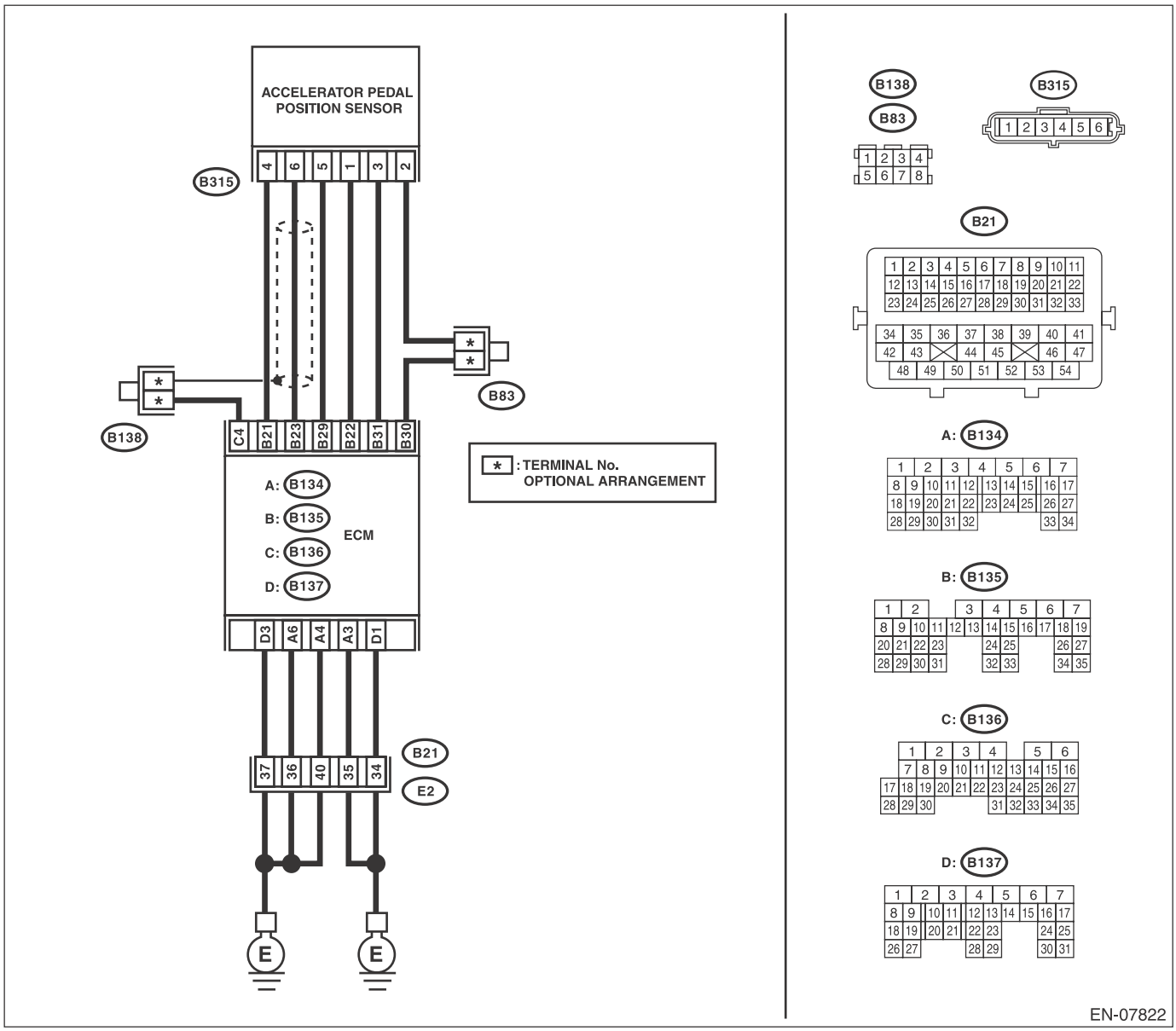

	Step	Check	Yes	No
1	**CHECK HARNESS BETWEEN ECM AND ACCELERATOR PEDAL POSITION SENSOR CONNECTOR.** 1) Turn the ignition switch to OFF. 2) Disconnect the connectors from ECM and accelerator pedal position sensor. 3) Measure the resistance between ECM and chassis ground. ***Connector & terminal*** ***(B135) No. 21 — Chassis ground:*** ***(B135) No. 23 — Chassis ground:*** ***(B135) No. 23 — (B136) No. 4:***	Is the resistance 1 MΩ or more?	Go to step **2**.	Repair the short circuit to ground in harness between ECM and accelerator pedal position sensor connector.
2	**CHECK SHORT CIRCUIT INSIDE THE ECM.** 1) Connect the connector to ECM. 2) Measure the resistance between accelerator pedal position sensor connector and chassis ground. ***Connector & terminal*** ***(B315) No. 6 — Chassis ground:***	Is the resistance 1 MΩ or more?	Replace the accelerator pedal. <Ref. to SP(H4SO)-4, Accelerator Pedal.>	Repair the short circuit to ground in harness between ECM and accelerator pedal position sensor connector. Replace the ECM if defective. <Ref. to FU(H4DOTC)-57, Engine Control Module (ECM).>

DS:DTC P2123 THROTTLE/PEDAL POSITION SENSOR/SWITCH “D” CIRCUIT HIGH INPUT

DTC DETECTING CONDITION:

- Immediately at fault recognition
- GENERAL DESCRIPTION <Ref. to GD(H4DOTC)-213, DTC P2123 THROTTLE/PEDAL POSITION SENSOR/SWITCH “D” CIRCUIT HIGH INPUT, Diagnostic Trouble Code (DTC) Detecting Criteria.>

TROUBLE SYMPTOM:

- Improper idling
- Poor driving performance

CAUTION:

After servicing or replacing faulty parts, perform Clear Memory Mode <Ref. to EN(H4DOTC)(diag)-55, OPERATION, Clear Memory Mode.>, and Inspection Mode <Ref. to EN(H4DOTC)(diag)-44, PROCEDURE, Inspection Mode.>.

WIRING DIAGRAM:

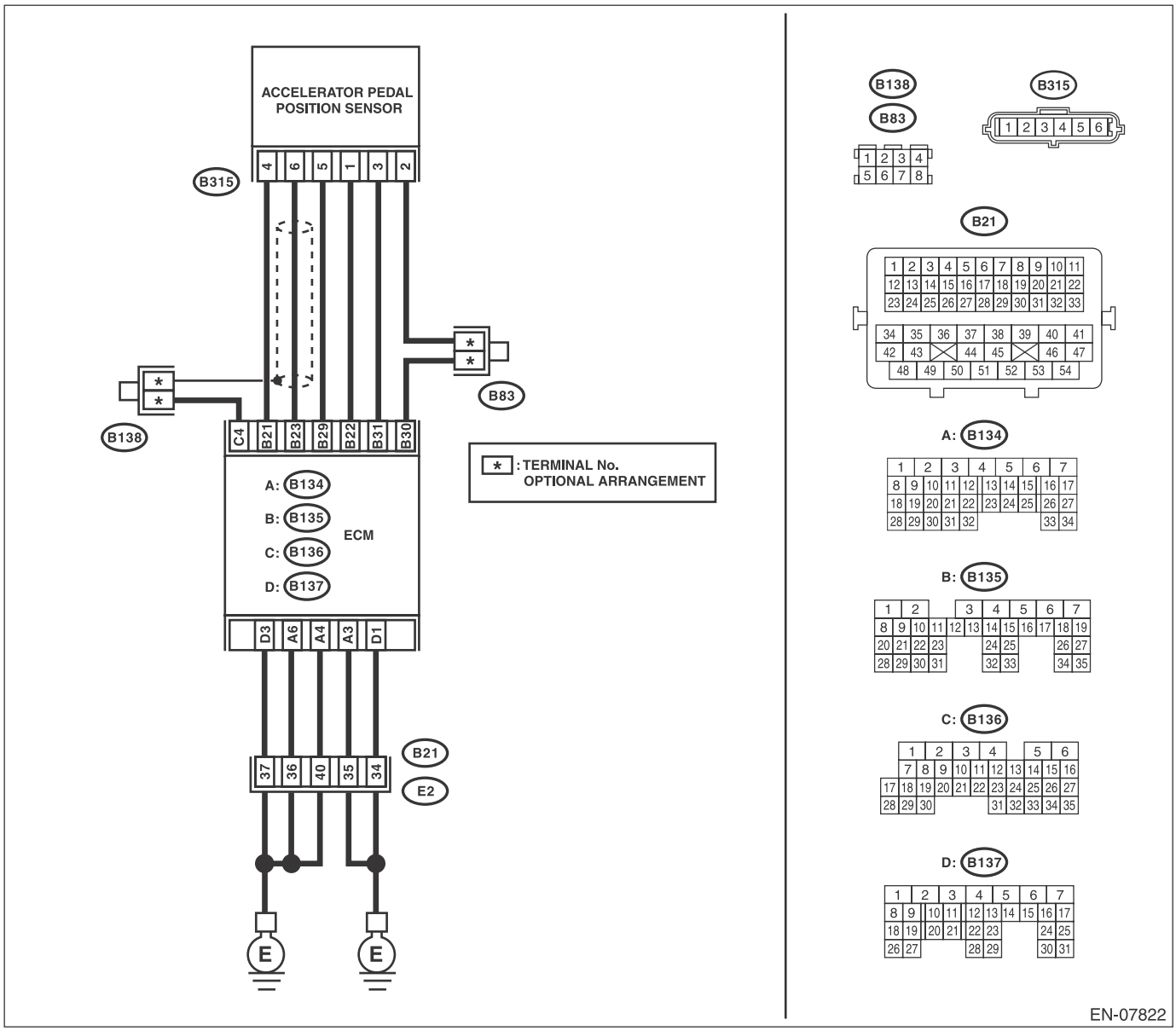

	Step	Check	Yes	No
1	**CHECK HARNESS BETWEEN ECM AND ACCELERATOR PEDAL POSITION SENSOR CONNECTOR.** 1) Turn the ignition switch to OFF. 2) Disconnect the connectors from ECM and accelerator pedal position sensor. 3) Measure the resistance of harness between ECM and accelerator pedal position sensor connector. ***Connector & terminal*** ***(B135) No. 23 — (B315) No. 6:*** ***(B135) No. 29 — (B315) No. 5:***	Is the resistance less than 1 Ω?	Go to step **2**.	Repair the open circuit of harness between ECM and accelerator pedal position sensor connector.
2	**CHECK HARNESS BETWEEN ECM AND ACCELERATOR PEDAL POSITION SENSOR CONNECTOR.** 1) Connect the connector to ECM. 2) Measure the resistance between accelerator pedal position sensor connector and chassis ground. ***Connector & terminal*** ***(B315) No. 5 — Chassis ground:***	Is the resistance less than 5 Ω?	Go to step **3**.	Repair the harness and connector. NOTE: In this case, repair the following item: • Open circuit of harness between ECM and engine ground • Poor contact of ECM connector • Poor contact of coupling connector
3	**CHECK HARNESS BETWEEN ECM AND ACCELERATOR PEDAL POSITION SENSOR CONNECTOR.** 1) Turn the ignition switch to ON. 2) Measure the voltage between accelerator pedal position sensor connector and chassis ground. ***Connector & terminal*** ***(B315) No. 6 (+) — Chassis ground (−):***	Is the voltage 5 V or more?	Repair the short circuit to power supply in the harness between the ECM and accelerator pedal position sensor connector.	Go to step **4**.
4	**CHECK HARNESS BETWEEN ECM AND ACCELERATOR PEDAL POSITION SENSOR CONNECTOR.** 1) Turn the ignition switch to OFF. 2) Disconnect the connector from ECM. 3) Measure the resistance between ECM connectors. ***Connector & terminal*** ***(B135) No. 21 — (B135) No. 23:***	Is the resistance 1 MΩ or more?	Repair the poor contact of accelerator pedal position sensor connector. Replace the accelerator pedal if defective. <Ref. to SP(H4SO)-4, Accelerator Pedal.>	Repair the short circuit to power supply in the harness between the ECM and accelerator pedal position sensor connector.

DT:DTC P2127 THROTTLE/PEDAL POSITION SENSOR/SWITCH “E” CIRCUIT LOW INPUT

DTC DETECTING CONDITION:

- Immediately at fault recognition
- GENERAL DESCRIPTION <Ref. to GD(H4DOTC)-215, DTC P2127 THROTTLE/PEDAL POSITION SENSOR/SWITCH “E” CIRCUIT LOW INPUT, Diagnostic Trouble Code (DTC) Detecting Criteria.>

TROUBLE SYMPTOM:

- Improper idling
- Poor driving performance

CAUTION:

After servicing or replacing faulty parts, perform Clear Memory Mode <Ref. to EN(H4DOTC)(diag)-55, OPERATION, Clear Memory Mode.>, and Inspection Mode <Ref. to EN(H4DOTC)(diag)-44, PROCEDURE, Inspection Mode.>.

WIRING DIAGRAM:

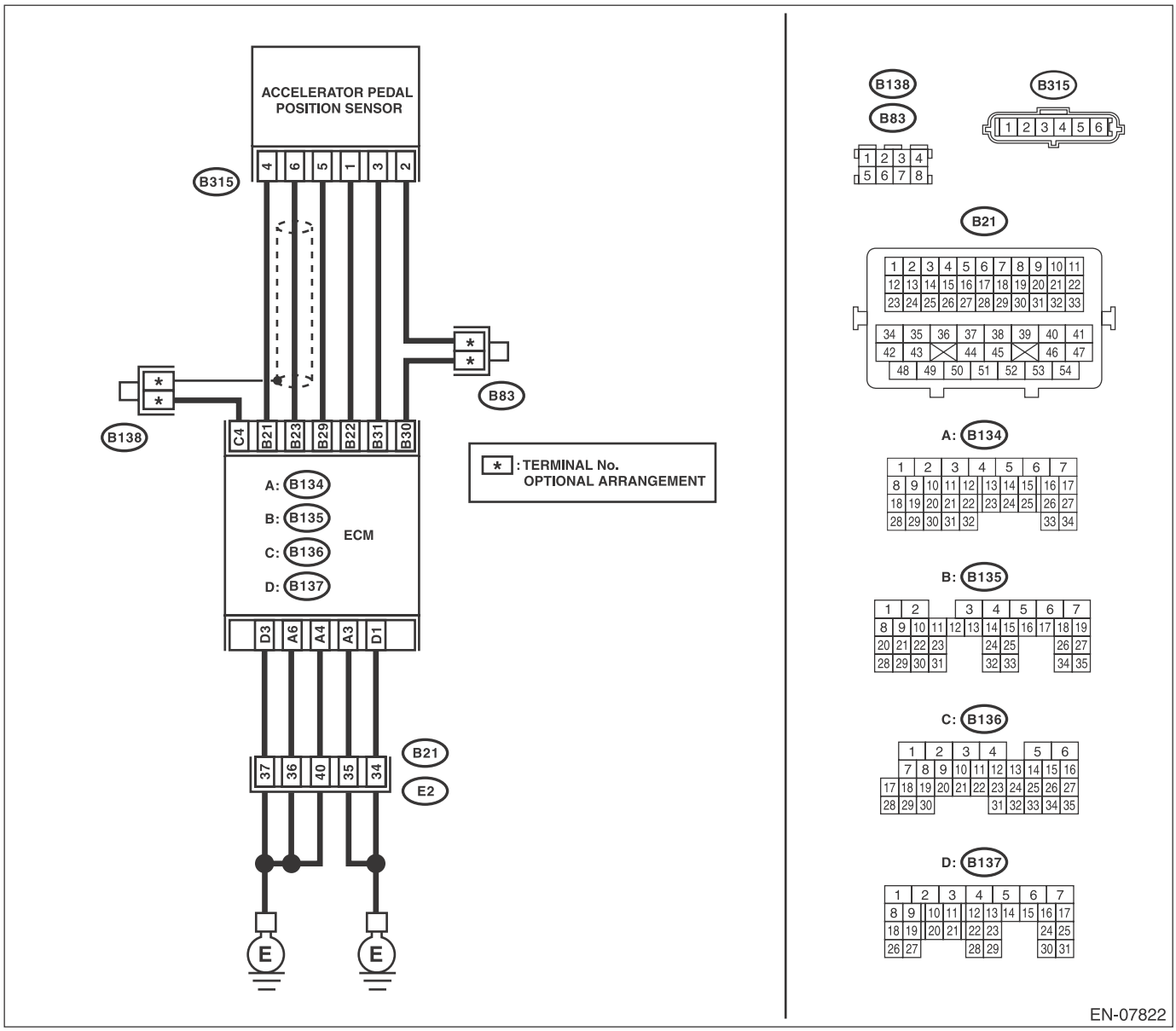

	Step	Check	Yes	No
1	**CHECK HARNESS BETWEEN ECM AND ACCELERATOR PEDAL POSITION SENSOR CONNECTOR.** 1) Turn the ignition switch to OFF. 2) Disconnect the connectors from ECM and accelerator pedal position sensor. 3) Measure the resistance between ECM and chassis ground. ***Connector & terminal*** ***(B135) No. 22 — Chassis ground:*** ***(B135) No. 31 — Chassis ground:***	Is the resistance 1 MΩ or more?	Go to step **2**.	Repair the short circuit to ground in harness between ECM and accelerator pedal position sensor connector.
2	**CHECK SHORT CIRCUIT INSIDE THE ECM.** 1) Connect the connector to ECM. 2) Measure the resistance between accelerator pedal position sensor connector and chassis ground. ***Connector & terminal*** ***(B315) No. 3 — Chassis ground:***	Is the resistance 1 MΩ or more?	Replace the accelerator pedal. <Ref. to SP(H4SO)-4, Accelerator Pedal.>	Repair the short circuit to ground in harness between ECM and accelerator pedal position sensor connector. Replace the ECM if defective. <Ref. to FU(H4DOTC)-57, Engine Control Module (ECM).>

DU:DTC P2128 THROTTLE/PEDAL POSITION SENSOR/SWITCH “E” CIRCUIT HIGH INPUT

DTC DETECTING CONDITION:

- Immediately at fault recognition
- GENERAL DESCRIPTION <Ref. to GD(H4DOTC)-217, DTC P2128 THROTTLE/PEDAL POSITION SENSOR/SWITCH “E” CIRCUIT HIGH INPUT, Diagnostic Trouble Code (DTC) Detecting Criteria.>

TROUBLE SYMPTOM:

- Improper idling
- Poor driving performance

CAUTION:

After servicing or replacing faulty parts, perform Clear Memory Mode <Ref. to EN(H4DOTC)(diag)-55, OPERATION, Clear Memory Mode.>, and Inspection Mode <Ref. to EN(H4DOTC)(diag)-44, PROCEDURE, Inspection Mode.>.

WIRING DIAGRAM:

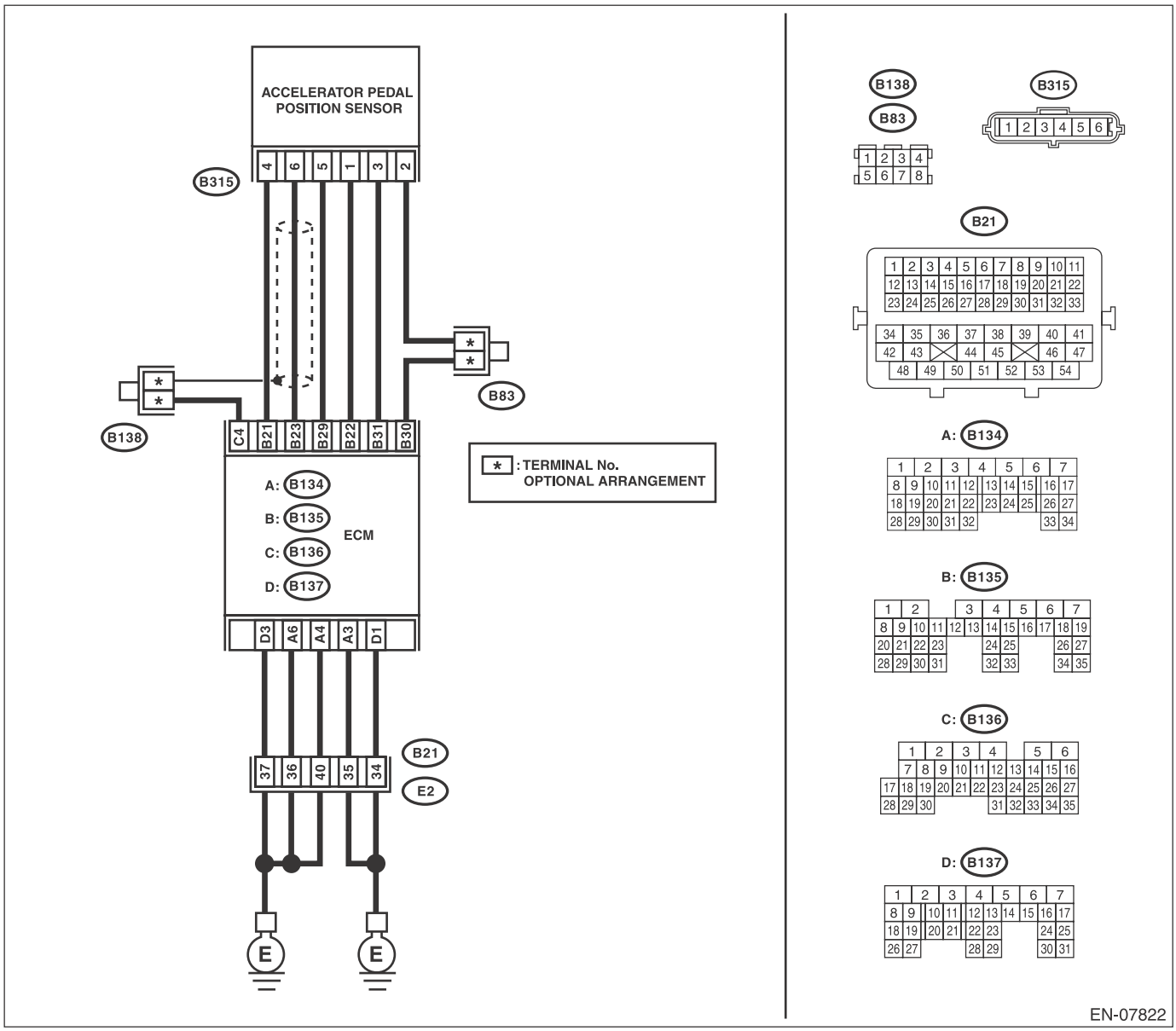

	Step	Check	Yes	No
1	**CHECK HARNESS BETWEEN ECM AND ACCELERATOR PEDAL POSITION SENSOR CONNECTOR.** 1) Turn the ignition switch to OFF. 2) Disconnect the connectors from ECM and accelerator pedal position sensor. 3) Measure the resistance of harness between ECM and accelerator pedal position sensor connector. ***Connector & terminal*** ***(B135) No. 31 — (B315) No. 3:*** ***(B135) No. 30 — (B315) No. 2:***	Is the resistance less than 1 Ω?	Go to step **2**.	Repair the harness and connector. NOTE: In this case, repair the following item: • Open circuit of harness between ECM and accelerator pedal position sensor connector. • Poor contact of coupling connector
2	**CHECK HARNESS BETWEEN ECM AND ACCELERATOR PEDAL POSITION SENSOR CONNECTOR.** 1) Connect the connector to ECM. 2) Measure the resistance between accelerator pedal position sensor connector and chassis ground. ***Connector & terminal*** ***(B315) No. 2 — Chassis ground:***	Is the resistance less than 1 Ω?	Go to step **3**.	Repair the harness and connector. NOTE: In this case, repair the following item: • Open circuit of harness between ECM and engine ground • Poor contact of ECM connector • Poor contact of coupling connector
3	**CHECK HARNESS BETWEEN ECM AND ACCELERATOR PEDAL POSITION SENSOR CONNECTOR.** 1) Turn the ignition switch to ON. 2) Measure the voltage between accelerator pedal position sensor connector and chassis ground. ***Connector & terminal*** ***(B315) No. 3 (+) — Chassis ground (–):***	Is the voltage 5 V or more?	Repair the short circuit to power supply in the harness between the ECM and accelerator pedal position sensor connector.	Go to step **4**.
4	**CHECK HARNESS BETWEEN ECM AND ACCELERATOR PEDAL POSITION SENSOR CONNECTOR.** 1) Turn the ignition switch to OFF. 2) Disconnect the connector from ECM. 3) Measure the resistance between ECM connectors. ***Connector & terminal*** ***(B135) No. 22 — (B135) No. 31:***	Is the resistance 1 MΩ or more?	Repair the poor contact of accelerator pedal position sensor connector. Replace the accelerator pedal if defective. <Ref. to SP(H4SO)-4, Accelerator Pedal.>	Repair the short circuit to power supply in the harness between the ECM and accelerator pedal position sensor connector.

DV:DTC P2135 THROTTLE/PEDAL POSITION SENSOR/SWITCH “A”/“B” VOLTAGE CORRELATION

DTC DETECTING CONDITION:

- Immediately at fault recognition
- GENERAL DESCRIPTION <Ref. to GD(H4DOTC)-219, DTC P2135 THROTTLE/PEDAL POSITION SENSOR/SWITCH “A”/“B” VOLTAGE CORRELATION, Diagnostic Trouble Code (DTC) Detecting Criteria.>

TROUBLE SYMPTOM:

- Improper idling
- Poor driving performance

CAUTION:

After servicing or replacing faulty parts, perform Clear Memory Mode <Ref. to EN(H4DOTC)(diag)-55, OPERATION, Clear Memory Mode.>, and Inspection Mode <Ref. to EN(H4DOTC)(diag)-44, PROCEDURE, Inspection Mode.>.

WIRING DIAGRAM:

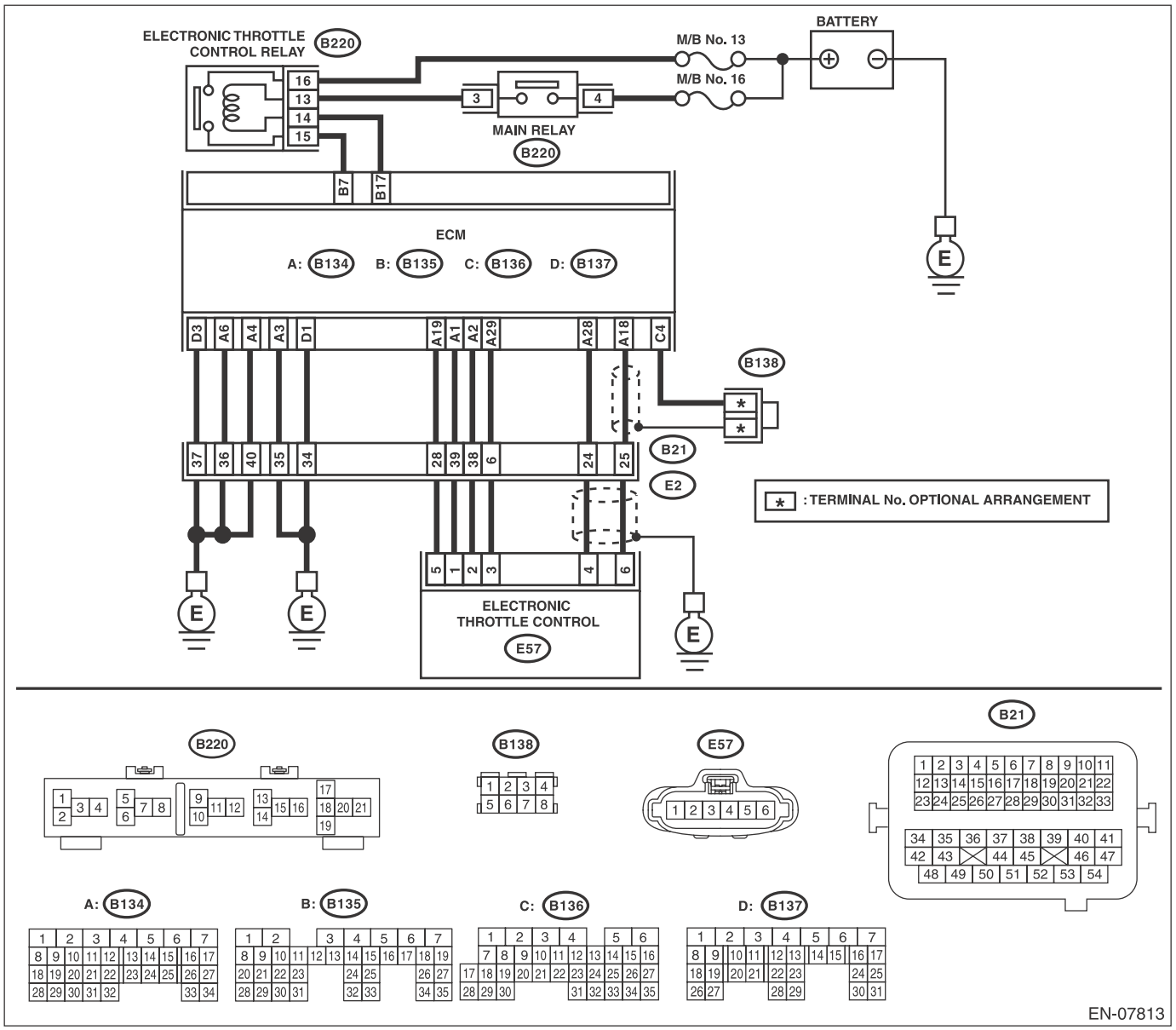

	Step	Check	Yes	No
1	**CHECK HARNESS BETWEEN ECM AND ELECTRONIC THROTTLE CONTROL CONNECTOR.** 1) Turn the ignition switch to OFF. 2) Disconnect the connectors from the ECM and electronic throttle control. 3) Measure the resistance between ECM and chassis ground. ***Connector & terminal*** ***(B134) No. 19 — Chassis ground:*** ***(B134) No. 18 — Chassis ground:*** ***(B134) No. 18 — (B136) No. 4:*** ***(B134) No. 28 — Chassis ground:***	Is the resistance 1 MΩ or more?	Go to step **2**.	Repair the ground short circuit of harness between ECM and electronic throttle control connector.
2	**CHECK SHORT CIRCUIT INSIDE THE ECM.** 1) Connect the connector to ECM. 2) Measure the resistance between electronic throttle control connector and engine ground. ***Connector & terminal*** ***(E57) No. 6 — Engine ground:*** ***(E57) No. 4 — Engine ground:***	Is the resistance 1 MΩ or more?	Go to step **3**.	Repair the ground short circuit of harness between ECM and electronic throttle control connector. Replace the ECM if defective. <Ref. to FU(H4DOTC)-57, Engine Control Module (ECM).>
3	**CHECK HARNESS BETWEEN ECM AND ELECTRONIC THROTTLE CONTROL CONNECTOR.** 1) Disconnect the connector from ECM. 2) Measure the resistance of harness between ECM and electronic throttle control connector. ***Connector & terminal*** ***(B134) No. 18 — (E57) No. 6:*** ***(B134) No. 28 — (E57) No. 4:*** ***(B134) No. 29 — (E57) No. 3:***	Is the resistance less than 1 Ω?	Go to step **4**.	Repair the harness and connector. NOTE: In this case, repair the following item: • Open circuit in harness between ECM and electronic throttle control connector • Poor contact of coupling connector
4	**CHECK HARNESS BETWEEN ECM AND ELECTRONIC THROTTLE CONTROL CONNECTOR.** 1) Connect the connector to ECM. 2) Measure the resistance between electronic throttle control connector and engine ground. ***Connector & terminal*** ***(E57) No. 3 — Engine ground:***	Is the resistance less than 5 Ω?	Go to step **5**.	Repair the harness and connector. NOTE: In this case, repair the following item: • Open circuit of harness between ECM and engine ground • Poor contact of ECM connector • Poor contact of coupling connector
5	**CHECK HARNESS BETWEEN ECM AND ELECTRONIC THROTTLE CONTROL CONNECTOR.** 1) Turn the ignition switch to ON. 2) Measure the voltage between electronic throttle control connector and engine ground. ***Connector & terminal*** ***(E57) No. 6 (+) — Engine ground (–):*** ***(E57) No. 4 (+) — Engine ground (–):***	Is the voltage 5 V or more?	Repair the short circuit of harness to power supply between ECM and electronic throttle control connector.	Go to step **6**.

Step		Check	Yes	No
6	**CHECK HARNESS BETWEEN ECM AND ELECTRONIC THROTTLE CONTROL CONNECTOR.** 1) Turn the ignition switch to OFF. 2) Disconnect the connector from ECM. 3) Measure the resistance between ECM connectors. ***Connector & terminal*** ***(B134) No. 19 — (B134) No. 18:*** ***(B134) No. 19 — (B134) No. 28:***	Is the resistance 1 MΩ or more?	Repair the poor contact of electronic throttle control connector. Replace the electronic throttle control if defective. <Ref. to FU(H4DOTC)-15, Throttle Body.>	Repair the short circuit of harness to power supply between ECM and electronic throttle control connector.

DW:DTC P2138 THROTTLE/PEDAL POSITION SENSOR/SWITCH “D”/“E” VOLTAGE CORRELATION

DTC DETECTING CONDITION:

- Immediately at fault recognition
- GENERAL DESCRIPTION <Ref. to GD(H4DOTC)-221, DTC P2138 THROTTLE/PEDAL POSITION SENSOR/SWITCH “D”/“E” VOLTAGE CORRELATION, Diagnostic Trouble Code (DTC) Detecting Criteria.>

TROUBLE SYMPTOM:

- Improper idling
- Poor driving performance

CAUTION:

After servicing or replacing faulty parts, perform Clear Memory Mode <Ref. to EN(H4DOTC)(diag)-55, OPERATION, Clear Memory Mode.>, and Inspection Mode <Ref. to EN(H4DOTC)(diag)-44, PROCEDURE, Inspection Mode.>.

WIRING DIAGRAM:

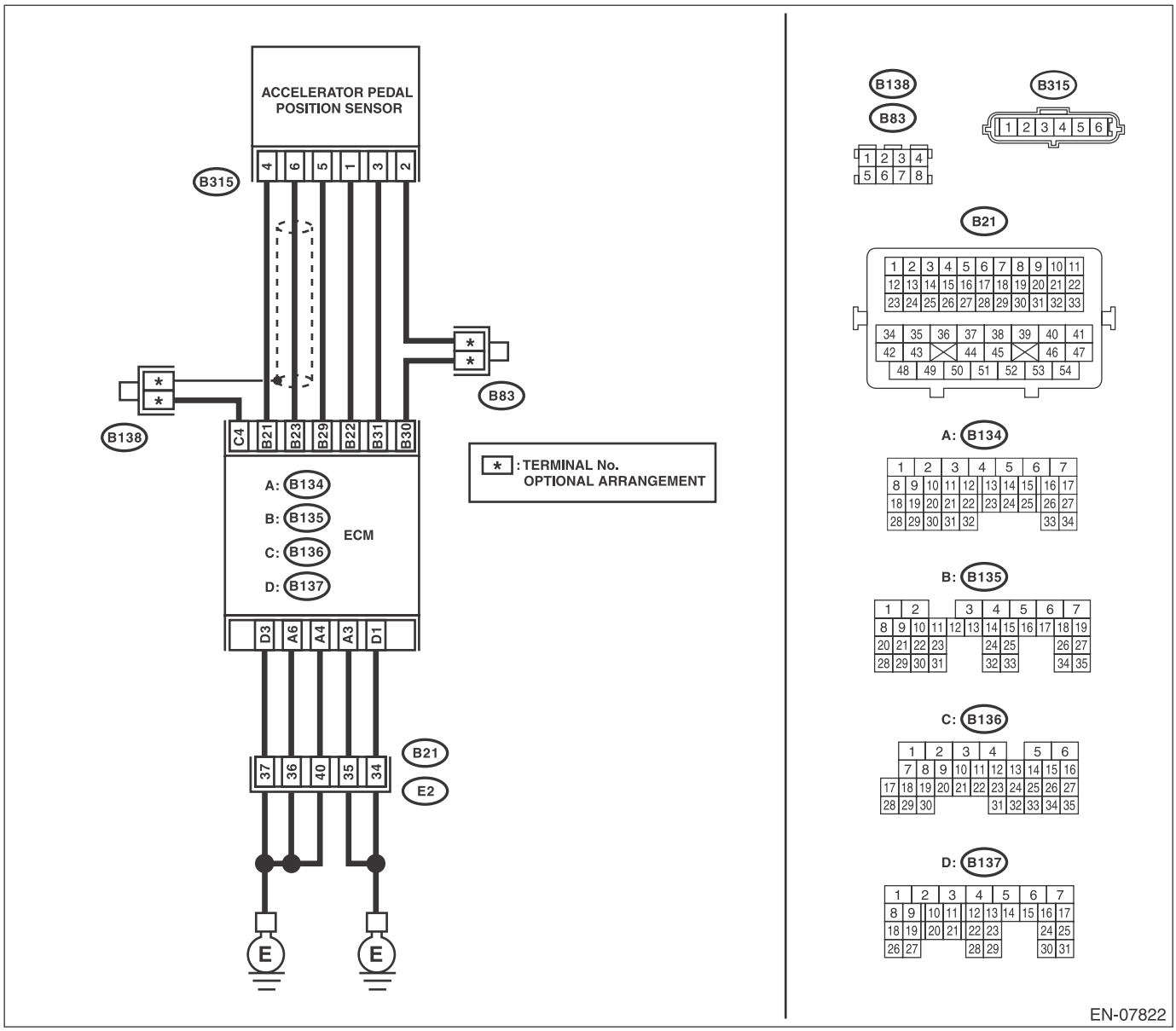

	Step	Check	Yes	No
1	**CHECK ACCELERATOR PEDAL POSITION SENSOR OUTPUT.** 1) Turn the ignition switch to ON. 2) Measure the voltage between ECM and chassis ground. ***Connector & terminal*** ***Main accelerator pedal position sensor signal*** ***(B135) No. 23 (+) — Chassis ground (–):*** ***Sub accelerator pedal position sensor signal*** ***(B135) No. 31 (+) — Chassis ground (–):***	Is the difference between the measured value of main accelerator pedal position sensor signal and the measured value of sub accelerator pedal position sensor signal 0 V?	Go to step **3.**	Go to step **2.**
2	**CHECK ACCELERATOR PEDAL POSITION SENSOR OUTPUT.** 1) Measure the voltage between accelerator pedal position sensor connector and chassis ground. ***Connector & terminal*** ***(B315) No. 6 (+) — Chassis ground (–):*** ***(B315) No. 3 (+) — Chassis ground (–):***	Is the difference between the measured value of main accelerator pedal position sensor signal and the measured value of sub accelerator pedal position sensor signal 0 V?	Replace the accelerator pedal. <Ref. to SP(H4SO)-4, Accelerator Pedal.>	Repair the harness and connector. NOTE: In this case, repair the following item: • Open circuit of harness between ECM and accelerator pedal position sensor connector. • Ground short circuit of harness between ECM and accelerator pedal position sensor connector.
3	**CHECK HARNESS BETWEEN ECM AND ACCELERATOR PEDAL POSITION SENSOR CONNECTOR.** Measure the resistance of harness between the accelerator pedal position sensor connector and chassis ground. ***Connector & terminal*** ***(B315) No. 5 — Chassis ground:*** ***(B315) No. 2 — Chassis ground:***	Is the resistance less than 5 Ω?	Repair the poor contact of ECM connector.	Repair the harness and connector. NOTE: In this case, repair the following item: • Open circuit of harness between ECM and accelerator pedal position sensor connector. • Open circuit of harness between ECM and engine ground • Poor contact of ECM connector • Poor contact of coupling connector

DX:DTC P2227 BAROMETRIC PRESSURE CIRCUIT RANGE/PERFORMANCE

DTC DETECTING CONDITION:

- Detected when two consecutive driving cycles with fault occur.
- GENERAL DESCRIPTION <Ref. to GD(H4DOTC)-223, DTC P2227 BAROMETRIC PRESSURE CIRCUIT RANGE/PERFORMANCE, Diagnostic Trouble Code (DTC) Detecting Criteria.>

CAUTION:
After servicing or replacing faulty parts, perform Clear Memory Mode <Ref. to EN(H4DOTC)(diag)-55, OPERATION, Clear Memory Mode.>, and Inspection Mode <Ref. to EN(H4DOTC)(diag)-44, PROCEDURE, Inspection Mode.>.

Step		Check	Yes	No
1	**CHECK FOR ANY OTHER DTC ON DISPLAY.**	Is any other DTC displayed?	Check DTC using “List of Diagnostic Trouble Code (DTC)”. <Ref. to EN(H4DOTC)(diag)-78, List of Diagnostic Trouble Code (DTC).>	Replace the ECM. <Ref. to FU(H4DOTC)-57, Engine Control Module (ECM).> NOTE: The barometric pressure sensor is built into the ECM.

DY:DTC P2228 BAROMETRIC PRESSURE CIRCUIT LOW

DTC DETECTING CONDITION:

- Immediately at fault recognition
- GENERAL DESCRIPTION <Ref. to GD(H4DOTC)-224, DTC P2228 BAROMETRIC PRESSURE CIRCUIT LOW, Diagnostic Trouble Code (DTC) Detecting Criteria.>

CAUTION:
After servicing or replacing faulty parts, perform Clear Memory Mode <Ref. to EN(H4DOTC)(diag)-55, OPERATION, Clear Memory Mode.>, and Inspection Mode <Ref. to EN(H4DOTC)(diag)-44, PROCEDURE, Inspection Mode.>.

Step		Check	Yes	No
1	**CHECK FOR ANY OTHER DTC ON DISPLAY.**	Is any other DTC displayed?	Check DTC using “List of Diagnostic Trouble Code (DTC)”. <Ref. to EN(H4DOTC)(diag)-78, List of Diagnostic Trouble Code (DTC).>	Replace the ECM. <Ref. to FU(H4DOTC)-57, Engine Control Module (ECM).> NOTE: The barometric pressure sensor is built into the ECM.

DZ:DTC P2229 BAROMETRIC PRESSURE CIRCUIT HIGH

DTC DETECTING CONDITION:

- Immediately at fault recognition
- GENERAL DESCRIPTION <Ref. to GD(H4DOTC)-225, DTC P2229 BAROMETRIC PRESSURE CIRCUIT HIGH, Diagnostic Trouble Code (DTC) Detecting Criteria.>

CAUTION:
After servicing or replacing faulty parts, perform Clear Memory Mode <Ref. to EN(H4DOTC)(diag)-55, OPERATION, Clear Memory Mode.>, and Inspection Mode <Ref. to EN(H4DOTC)(diag)-44, PROCEDURE, Inspection Mode.>.

Step		Check	Yes	No
1	**CHECK FOR ANY OTHER DTC ON DISPLAY.**	Is any other DTC displayed?	Check DTC using “List of Diagnostic Trouble Code (DTC)”. <Ref. to EN(H4DOTC)(diag)-78, List of Diagnostic Trouble Code (DTC).>	Replace the ECM. <Ref. to FU(H4DOTC)-57, Engine Control Module (ECM).> NOTE: The barometric pressure sensor is built into the ECM.

EA:DTC P2419 EVAPORATIVE EMISSION SYSTEM SWITCHING VALVE CONTROL CIRCUIT LOW

DTC DETECTING CONDITION:

- Detected when two consecutive driving cycles with fault occur.
- GENERAL DESCRIPTION <Ref. to GD(H4DOTC)-226, DTC P2419 EVAPORATIVE EMISSION SYSTEM SWITCHING VALVE CONTROL CIRCUIT LOW, Diagnostic Trouble Code (DTC) Detecting Criteria.>

TROUBLE SYMPTOM:

Improper idling

CAUTION:

After servicing or replacing faulty parts, perform Clear Memory Mode <Ref. to EN(H4DOTC)(diag)-55, OPERATION, Clear Memory Mode.>, and Inspection Mode <Ref. to EN(H4DOTC)(diag)-44, PROCEDURE, Inspection Mode.>.

WIRING DIAGRAM:

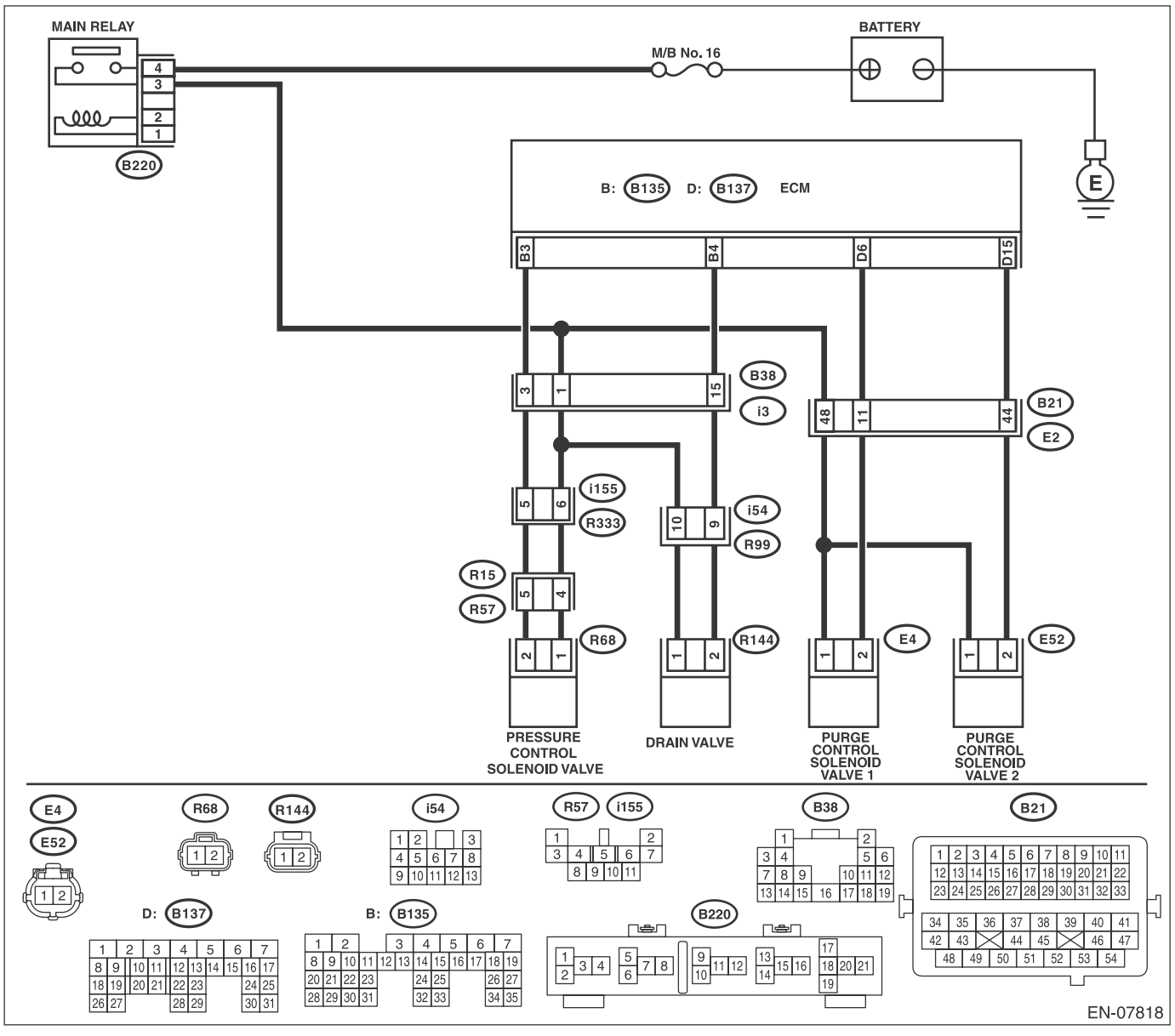

	Step	Check	Yes	No
1	**CHECK OUTPUT SIGNAL OF ECM.** 1) Turn the ignition switch to ON. 2) Measure the voltage between ECM and chassis ground. ***Connector & terminal*** ***(B137) No. 15 (+) — Chassis ground (–):***	Is the voltage 10 V or more?	Go to step **2**.	Go to step **3**.
2	**CHECK FOR POOR CONTACT.** Check for poor contact of ECM connector.	Is there poor contact of ECM connector?	Repair the poor contact of ECM connector.	Even if DTC is detected, the circuit has returned to a normal condition at this time. Reproduce the failure, and then perform the diagnosis again. NOTE: In this case, temporary open or short circuit of harness or temporary poor contact of connector may be the cause.
3	**CHECK POWER SUPPLY TO PURGE CONTROL SOLENOID VALVE 2.** Measure the voltage between purge control solenoid valve 2 connector and engine ground. ***Connector & terminal*** ***(E52) No. 1 (+) — Engine ground (–):***	Is the voltage 10 V or more?	Go to step **4**.	Repair the power supply circuit.
4	**CHECK HARNESS BETWEEN ECM AND PURGE CONTROL SOLENOID VALVE 2 CONNECTOR.** 1) Turn the ignition switch to OFF. 2) Disconnect the connectors from ECM and purge control solenoid valve 2. 3) Measure the resistance between the purge control solenoid valve 2 connector and engine ground. ***Connector & terminal*** ***(E52) No. 2 — Engine ground:***	Is the resistance 1 MΩ or more?	Go to step **5**.	Repair the ground short circuit of harness between ECM and purge control solenoid valve 2 connector.
5	**CHECK HARNESS BETWEEN ECM AND PURGE CONTROL SOLENOID VALVE 2 CONNECTOR.** Measure the resistance of harness between ECM and purge control solenoid valve 2 connector. ***Connector & terminal*** ***(B137) No. 15 — (E52) No. 2:***	Is the resistance less than 1 Ω?	Go to step **6**.	Repair the harness and connector. NOTE: In this case, repair the following item: • Open circuit of harness between ECM and purge control solenoid valve 2 connector • Poor contact of coupling connector
6	**CHECK PURGE CONTROL SOLENOID VALVE 2.** 1) Remove the purge control solenoid valve 2. 2) Measure the resistance between purge control solenoid valve 2 terminals. ***Terminals*** ***No. 1 — No. 2:***	Is the resistance 10 — 100 Ω?	Repair the poor contact of the purge control solenoid valve 2 connector.	Replace the purge control solenoid valve 2. <Ref. to EC(H4DOTC)-9, Purge Control Solenoid Valve.>

EB:DTC P2420 EVAPORATIVE EMISSION SYSTEM SWITCHING VALVE CONTROL CIRCUIT HIGH

DTC DETECTING CONDITION:

- Detected when two consecutive driving cycles with fault occur.
- GENERAL DESCRIPTION <Ref. to GD(H4DOTC)-227, DTC P2420 EVAPORATIVE EMISSION SYSTEM SWITCHING VALVE CONTROL CIRCUIT HIGH, Diagnostic Trouble Code (DTC) Detecting Criteria.>

TROUBLE SYMPTOM:

Improper idling

CAUTION:

After servicing or replacing faulty parts, perform Clear Memory Mode <Ref. to EN(H4DOTC)(diag)-55, OPERATION, Clear Memory Mode.>, and Inspection Mode <Ref. to EN(H4DOTC)(diag)-44, PROCEDURE, Inspection Mode.>.

WIRING DIAGRAM:

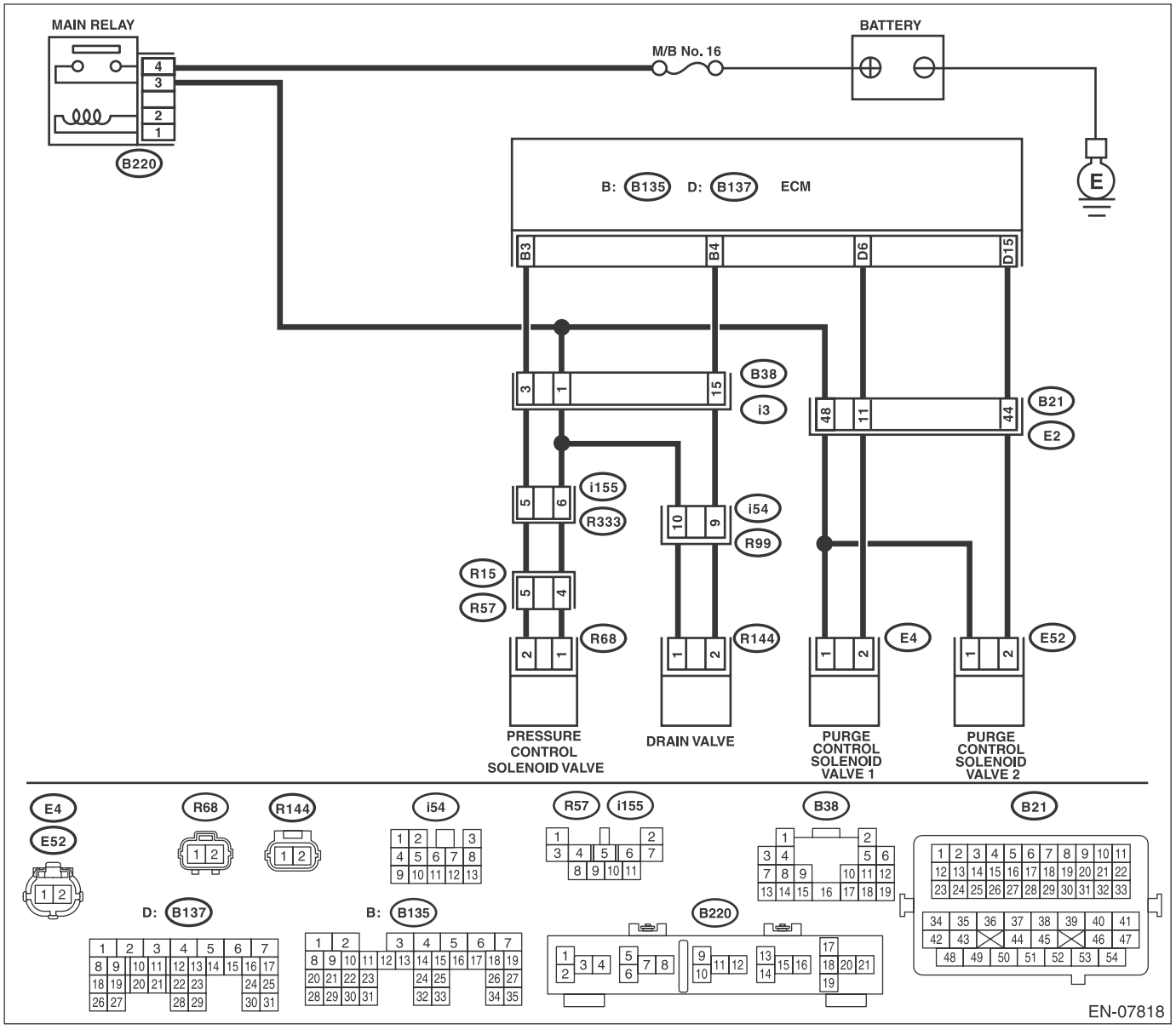

	Step	Check	Yes	No
1	**CHECK HARNESS BETWEEN ECM AND PURGE CONTROL SOLENOID VALVE 2 CONNECTOR.** 1) Turn the ignition switch to OFF. 2) Disconnect the connectors from ECM and purge control solenoid valve 2. 3) Turn the ignition switch to ON. 4) Measure the voltage between ECM and chassis ground. ***Connector & terminal*** ***(B137) No. 15 (+) — Chassis ground (–):***	Is the voltage 10 V or more?	Repair the short to power in the harness between ECM and purge control solenoid valve 2 connector.	Go to step **2**.
2	**CHECK PURGE CONTROL SOLENOID VALVE 2.** 1) Turn the ignition switch to OFF. 2) Measure the resistance between purge control solenoid valve 2 terminals. ***Terminals*** ***No. 1 — No. 2:***	Is the resistance less than 1 Ω?	Replace the purge control solenoid valve 2. <Ref. to EC(H4DOTC)-9, Purge Control Solenoid Valve.>	Repair the poor contact of ECM connector.

EC:DTC U0073 CAN FAILURE, BUS 'OFF' DETECTION

NOTE:
For the diagnostic procedure, refer to LAN section. <Ref. to LAN(diag)-2, Basic Diagnostic Procedure.>

ED:DTC U0101 CAN (TCU) DATA NOT LOADED

NOTE:
For the diagnostic procedure, refer to LAN section. <Ref. to LAN(diag)-2, Basic Diagnostic Procedure.>

EE:DTC U0122 CAN (VDC) DATA NOT LOADED

NOTE:
For the diagnostic procedure, refer to LAN section. <Ref. to LAN(diag)-2, Basic Diagnostic Procedure.>

EF:DTC U0140 CAN (BCU) DATA NOT LOADED

NOTE:
For the diagnostic procedure, refer to LAN section. <Ref. to LAN(diag)-2, Basic Diagnostic Procedure.>

EG:DTC U0402 CAN (TCU) DATA ABNORMAL

NOTE:
For the diagnostic procedure, refer to LAN section. <Ref. to LAN(diag)-2, Basic Diagnostic Procedure.>

EH:DTC U0416 CAN (VDC) DATA ABNORMAL

NOTE:
For the diagnostic procedure, refer to LAN section. <Ref. to LAN(diag)-2, Basic Diagnostic Procedure.>

EI: DTC U0422 CAN (BCU) DATA ABNORMAL

NOTE:
For the diagnostic procedure, refer to LAN section. <Ref. to LAN(diag)-2, Basic Diagnostic Procedure.>

19.General Diagnostic Table

A: INSPECTION

1. ENGINE

NOTE:
Malfunction of parts other than those listed is also possible. <Ref. to ME(H4DOTC)-109, Engine Trouble in General.>

Symptoms	Problem parts
1. Engine stalls during idling.	1) Electronic throttle control 2) Manifold absolute pressure sensor 3) Mass air flow and intake air temperature sensor 4) Ignition parts (*1) 5) Engine coolant temperature sensor (*2) 6) Crankshaft position sensor (*3) 7) Camshaft position sensor (*3) 8) Fuel injection parts (*4)
2. Rough idling	1) Electronic throttle control 2) Manifold absolute pressure sensor 3) Mass air flow and intake air temperature sensor 4) Engine coolant temperature sensor (*2) 5) Ignition parts (*1) 6) Air intake system (*5) 7) Fuel injection parts (*4) 8) Crankshaft position sensor (*3) 9) Camshaft position sensor (*3) 10) Oxygen sensor 11) Fuel pump and fuel pump relay
3. Engine does not return to idle.	1) Electronic throttle control 2) Engine coolant temperature sensor 3) Manifold absolute pressure sensor 4) Mass air flow and intake air temperature sensor 5) Accelerator pedal position sensor
4. Poor acceleration	1) Manifold absolute pressure sensor 2) Mass air flow and intake air temperature sensor 3) Electronic throttle control 4) Fuel injection parts (*4) 5) Fuel pump and fuel pump relay 6) Engine coolant temperature sensor (*2) 7) Crankshaft position sensor (*3) 8) Camshaft position sensor (*3) 9) Engine torque control signal circuit 10) Ignition parts (*1) 11) Accelerator pedal position sensor
5. Engine stalls, hesitates, or sputters at acceleration.	1) Manifold absolute pressure sensor 2) Mass air flow and intake air temperature sensor 3) Engine coolant temperature sensor (*2) 4) Crankshaft position sensor (*3) 5) Camshaft position sensor (*3) 6) Purge control solenoid valve 7) Fuel injection parts (*4) 8) Fuel pump and fuel pump relay 9) Electronic throttle control

General Diagnostic Table

Symptoms	Problem parts
6. Surging	1) Manifold absolute pressure sensor 2) Mass air flow and intake air temperature sensor 3) Engine coolant temperature sensor (*2) 4) Crankshaft position sensor (*3) 5) Camshaft position sensor (*3) 6) Fuel injection parts (*4) 7) Electronic control position sensor 8) Fuel pump and fuel pump relay
7. Spark knock	1) Manifold absolute pressure sensor 2) Mass air flow and intake air temperature sensor 3) Engine coolant temperature sensor 4) Knock sensor 5) Fuel injection parts (*4) 6) Fuel pump and fuel pump relay
8. After-burning in exhaust system	1) Manifold absolute pressure sensor 2) Mass air flow and intake air temperature sensor 3) Engine coolant temperature sensor (*2) 4) Fuel injection parts (*4) 5) Fuel pump and fuel pump relay

*1: Check ignition coil and spark plug.
*2: Indicate the symptom occurring only in cold temperatures.
*3: Ensure the secure installation.
*4: Check fuel injector, fuel pressure regulator and fuel filter.
*5: Inspect air leak in air intake system.

GENERAL DESCRIPTION

GD(H4DOTC)

Page

1. List of Diagnostic Trouble Code (DTC) 2
2. Diagnostic Trouble Code (DTC) Detecting Criteria 10

1. List of Diagnostic Trouble Code (DTC)

A: LIST

DTC	Item	Index
P0011	Intake Camshaft Position - Timing Over-Advanced or System Performance (Bank 1)	<Ref. to GD(H4DOTC)-10, DTC P0011 INTAKE CAMSHAFT POSITION - TIMING OVER-ADVANCED OR SYSTEM PERFORMANCE (BANK 1), Diagnostic Trouble Code (DTC) Detecting Criteria.>
P0014	Exhaust AVCS System 1 (Range/ Performance)	<Ref. to GD(H4DOTC)-12, DTC P0014 EXHAUST AVCS SYSTEM 1 (RANGE/PERFORMANCE), Diagnostic Trouble Code (DTC) Detecting Criteria.>
P0016	Crankshaft Position - Camshaft Position Correlation (Bank1)	<Ref. to GD(H4DOTC)-14, DTC P0016 CRANKSHAFT POSITION - CAMSHAFT POSITION CORRELATION (BANK1), Diagnostic Trouble Code (DTC) Detecting Criteria.>
P0017	Crank and Cam Timing B System Failure (Bank 1)	<Ref. to GD(H4DOTC)-16, DTC P0017 CRANK AND CAM TIMING B SYSTEM FAILURE (BANK 1), Diagnostic Trouble Code (DTC) Detecting Criteria.>
P0018	Crankshaft Position - Camshaft Position Correlation (Bank2)	<Ref. to GD(H4DOTC)-18, DTC P0018 CRANKSHAFT POSITION - CAMSHAFT POSITION CORRELATION (BANK2), Diagnostic Trouble Code (DTC) Detecting Criteria.>
P0019	Crank and Cam Timing B System Failure (Bank 2)	<Ref. to GD(H4DOTC)-18, DTC P0019 CRANK AND CAM TIMING B SYSTEM FAILURE (BANK 2), Diagnostic Trouble Code (DTC) Detecting Criteria.>
P0021	Intake Camshaft Position - Timing Over-Advanced or System Performance (Bank 2)	<Ref. to GD(H4DOTC)-18, DTC P0021 INTAKE CAMSHAFT POSITION - TIMING OVER-ADVANCED OR SYSTEM PERFORMANCE (BANK 2), Diagnostic Trouble Code (DTC) Detecting Criteria.>
P0024	Exhaust AVCS System 2 (Range/ Performance)	<Ref. to GD(H4DOTC)-18, DTC P0024 EXHAUST AVCS SYSTEM 2 (RANGE/PERFORMANCE), Diagnostic Trouble Code (DTC) Detecting Criteria.>
P0030	HO2S Heater Control Circuit (Bank 1 Sensor 1)	<Ref. to GD(H4DOTC)-19, DTC P0030 HO2S HEATER CONTROL CIRCUIT (BANK 1 SENSOR 1), Diagnostic Trouble Code (DTC) Detecting Criteria.>
P0031	HO2S Heater Control Circuit Low (Bank 1 Sensor 1)	<Ref. to GD(H4DOTC)-21, DTC P0031 HO2S HEATER CONTROL CIRCUIT LOW (BANK 1 SENSOR 1), Diagnostic Trouble Code (DTC) Detecting Criteria.>
P0032	HO2S Heater Control Circuit High (Bank 1 Sensor 1)	<Ref. to GD(H4DOTC)-23, DTC P0032 HO2S HEATER CONTROL CIRCUIT HIGH (BANK 1 SENSOR 1), Diagnostic Trouble Code (DTC) Detecting Criteria.>
P0037	HO2S Heater Control Circuit Low (Bank 1 Sensor 2)	<Ref. to GD(H4DOTC)-25, DTC P0037 HO2S HEATER CONTROL CIRCUIT LOW (BANK 1 SENSOR 2), Diagnostic Trouble Code (DTC) Detecting Criteria.>
P0038	HO2S Heater Control Circuit High (Bank 1 Sensor 2)	<Ref. to GD(H4DOTC)-27, DTC P0038 HO2S HEATER CONTROL CIRCUIT HIGH (BANK 1 SENSOR 2), Diagnostic Trouble Code (DTC) Detecting Criteria.>
P0068	MAP/MAF - Throttle Position Correlation	<Ref. to GD(H4DOTC)-29, DTC P0068 MAP/MAF - THROTTLE POSITION CORRELATION, Diagnostic Trouble Code (DTC) Detecting Criteria.>
P0101	Mass or Volume Air Flow Circuit Range/Performance	<Ref. to GD(H4DOTC)-31, DTC P0101 MASS OR VOLUME AIR FLOW CIRCUIT RANGE/PERFORMANCE, Diagnostic Trouble Code (DTC) Detecting Criteria.>
P0102	Mass or Volume Air Flow Circuit Low Input	<Ref. to GD(H4DOTC)-33, DTC P0102 MASS OR VOLUME AIR FLOW CIRCUIT LOW INPUT, Diagnostic Trouble Code (DTC) Detecting Criteria.>
P0103	Mass or Volume Air Flow Circuit High Input	<Ref. to GD(H4DOTC)-34, DTC P0103 MASS OR VOLUME AIR FLOW CIRCUIT HIGH INPUT, Diagnostic Trouble Code (DTC) Detecting Criteria.>
P0107	Manifold Absolute Pressure/Barometric Pressure Circuit Low Input	<Ref. to GD(H4DOTC)-35, DTC P0107 MANIFOLD ABSOLUTE PRESSURE/BAROMETRIC PRESSURE CIRCUIT LOW INPUT, Diagnostic Trouble Code (DTC) Detecting Criteria.>
P0108	Manifold Absolute Pressure/Barometric Pressure Circuit High Input	<Ref. to GD(H4DOTC)-36, DTC P0108 MANIFOLD ABSOLUTE PRESSURE/BAROMETRIC PRESSURE CIRCUIT HIGH INPUT, Diagnostic Trouble Code (DTC) Detecting Criteria.>

DTC	Item	Index
P0111	Intake Air Temperature Sensor 1 Circuit Range/Performance	<Ref. to GD(H4DOTC)-37, DTC P0111 INTAKE AIR TEMPERATURE SENSOR 1 CIRCUIT RANGE/PERFORMANCE, Diagnostic Trouble Code (DTC) Detecting Criteria.>
P0112	Intake Air Temperature Sensor 1 Circuit Low	<Ref. to GD(H4DOTC)-40, DTC P0112 INTAKE AIR TEMPERATURE SENSOR 1 CIRCUIT LOW, Diagnostic Trouble Code (DTC) Detecting Criteria.>
P0113	Intake Air Temperature Sensor 1 Circuit High	<Ref. to GD(H4DOTC)-41, DTC P0113 INTAKE AIR TEMPERATURE SENSOR 1 CIRCUIT HIGH, Diagnostic Trouble Code (DTC) Detecting Criteria.>
P0117	Engine Coolant Temperature Circuit Low	<Ref. to GD(H4DOTC)-42, DTC P0117 ENGINE COOLANT TEMPERATURE CIRCUIT LOW, Diagnostic Trouble Code (DTC) Detecting Criteria.>
P0118	Engine Coolant Temperature Circuit High	<Ref. to GD(H4DOTC)-43, DTC P0118 ENGINE COOLANT TEMPERATURE CIRCUIT HIGH, Diagnostic Trouble Code (DTC) Detecting Criteria.>
P0122	Throttle/Pedal Position Sensor/ Switch “A” Circuit Low	<Ref. to GD(H4DOTC)-44, DTC P0122 THROTTLE/PEDAL POSITION SENSOR/SWITCH “A” CIRCUIT LOW, Diagnostic Trouble Code (DTC) Detecting Criteria.>
P0123	Throttle/Pedal Position Sensor/ Switch “A” Circuit High	<Ref. to GD(H4DOTC)-45, DTC P0123 THROTTLE/PEDAL POSITION SENSOR/SWITCH “A” CIRCUIT HIGH, Diagnostic Trouble Code (DTC) Detecting Criteria.>
P0125	Insufficient Coolant Temperature for Closed Loop Fuel Control	<Ref. to GD(H4DOTC)-46, DTC P0125 INSUFFICIENT COOLANT TEMPERATURE FOR CLOSED LOOP FUEL CONTROL, Diagnostic Trouble Code (DTC) Detecting Criteria.>
P0126	Insufficient Engine Coolant Temperature for Stable Operation	<Ref. to GD(H4DOTC)-48, DTC P0126 INSUFFICIENT ENGINE COOLANT TEMPERATURE FOR STABLE OPERATION, Diagnostic Trouble Code (DTC) Detecting Criteria.>
P0128	Coolant Thermostat (Engine Coolant Temperature Below Thermostat Regulating Temperature)	<Ref. to GD(H4DOTC)-50, DTC P0128 COOLANT THERMOSTAT (ENGINE COOLANT TEMPERATURE BELOW THERMOSTAT REGULATING TEMPERATURE), Diagnostic Trouble Code (DTC) Detecting Criteria.>
P0131	O2 Sensor Circuit Low Voltage (Bank 1 Sensor 1)	<Ref. to GD(H4DOTC)-52, DTC P0131 O2 SENSOR CIRCUIT LOW VOLTAGE (BANK 1 SENSOR 1), Diagnostic Trouble Code (DTC) Detecting Criteria.>
P0132	O2 Sensor Circuit High Voltage (Bank 1 Sensor 1)	<Ref. to GD(H4DOTC)-54, DTC P0132 O2 SENSOR CIRCUIT HIGH VOLTAGE (BANK 1 SENSOR 1), Diagnostic Trouble Code (DTC) Detecting Criteria.>
P0133	O2 Sensor Circuit Slow Response (Bank 1 Sensor 1)	<Ref. to GD(H4DOTC)-56, DTC P0133 O2 SENSOR CIRCUIT SLOW RESPONSE (BANK 1 SENSOR 1), Diagnostic Trouble Code (DTC) Detecting Criteria.>
P0134	O2 Sensor Circuit No Activity Detected (Bank 1 Sensor 1)	<Ref. to GD(H4DOTC)-59, DTC P0134 O2 SENSOR CIRCUIT NO ACTIVITY DETECTED (BANK 1 SENSOR 1), Diagnostic Trouble Code (DTC) Detecting Criteria.>
P0137	O2 Sensor Circuit Low Voltage (Bank 1 Sensor 2)	<Ref. to GD(H4DOTC)-61, DTC P0137 O2 SENSOR CIRCUIT LOW VOLTAGE (BANK 1 SENSOR 2), Diagnostic Trouble Code (DTC) Detecting Criteria.>
P0138	O2 Sensor Circuit High Voltage (Bank 1 Sensor 2)	<Ref. to GD(H4DOTC)-63, DTC P0138 O2 SENSOR CIRCUIT HIGH VOLTAGE (BANK 1 SENSOR 2), Diagnostic Trouble Code (DTC) Detecting Criteria.>
P0139	O2 Sensor Circuit Slow Response (Bank 1 Sensor 2)	<Ref. to GD(H4DOTC)-64, DTC P0139 O2 SENSOR CIRCUIT SLOW RESPONSE (BANK 1 SENSOR 2), Diagnostic Trouble Code (DTC) Detecting Criteria.>
P0140	O2 Sensor Circuit No Activity Detected (Bank 1 Sensor 2)	<Ref. to GD(H4DOTC)-72, DTC P0140 O2 SENSOR CIRCUIT NO ACTIVITY DETECTED (BANK1 SENSOR2), Diagnostic Trouble Code (DTC) Detecting Criteria.>
P0141	O2 Sensor Heater Circuit (Bank1 Sensor2)	<Ref. to GD(H4DOTC)-74, DTC P0141 O2 SENSOR HEATER CIRCUIT (BANK1 SENSOR2), Diagnostic Trouble Code (DTC) Detecting Criteria.>
P0171	System Too Lean (Bank 1)	<Ref. to GD(H4DOTC)-76, DTC P0171 SYSTEM TOO LEAN (BANK 1), Diagnostic Trouble Code (DTC) Detecting Criteria.>
P0172	System Too Rich (Bank 1)	<Ref. to GD(H4DOTC)-77, DTC P0172 SYSTEM TOO RICH (BANK 1), Diagnostic Trouble Code (DTC) Detecting Criteria.>

List of Diagnostic Trouble Code (DTC)

DTC	Item	Index
P0181	Fuel Temperature Sensor “A” Circuit Range/Performance	<Ref. to GD(H4DOTC)-78, DTC P0181 FUEL TEMPERATURE SENSOR “A” CIRCUIT RANGE/PERFORMANCE, Diagnostic Trouble Code (DTC) Detecting Criteria.>
P0182	Fuel Temperature Sensor “A” Circuit Low Input	<Ref. to GD(H4DOTC)-81, DTC P0182 FUEL TEMPERATURE SENSOR “A” CIRCUIT LOW INPUT, Diagnostic Trouble Code (DTC) Detecting Criteria.>
P0183	Fuel Temperature Sensor “A” Circuit High Input	<Ref. to GD(H4DOTC)-82, DTC P0183 FUEL TEMPERATURE SENSOR “A” CIRCUIT HIGH INPUT, Diagnostic Trouble Code (DTC) Detecting Criteria.>
P0222	Throttle/Pedal Position Sensor/Switch “B” Circuit Low	<Ref. to GD(H4DOTC)-83, DTC P0222 THROTTLE/PEDAL POSITION SENSOR/SWITCH “B” CIRCUIT LOW, Diagnostic Trouble Code (DTC) Detecting Criteria.>
P0223	Throttle/Pedal Position Sensor/Switch “B” Circuit High	<Ref. to GD(H4DOTC)-84, DTC P0223 THROTTLE/PEDAL POSITION SENSOR/SWITCH “B” CIRCUIT HIGH, Diagnostic Trouble Code (DTC) Detecting Criteria.>
P0230	Fuel Pump Primary Circuit	<Ref. to GD(H4DOTC)-85, DTC P0230 FUEL PUMP PRIMARY CIRCUIT, Diagnostic Trouble Code (DTC) Detecting Criteria.>
P0244	Turbo/Super Charger Wastegate Solenoid “A” Range/Performance	<Ref. to GD(H4DOTC)-87, DTC P0244 TURBO/SUPER CHARGER WASTEGATE SOLENOID “A” RANGE/PERFORMANCE, Diagnostic Trouble Code (DTC) Detecting Criteria.>
P0245	Turbo/Super Charger Wastegate Solenoid “A” Low	<Ref. to GD(H4DOTC)-90, DTC P0245 TURBO/SUPER CHARGER WASTEGATE SOLENOID “A” LOW, Diagnostic Trouble Code (DTC) Detecting Criteria.>
P0246	Turbo/Super Charger Wastegate Solenoid “A” High	<Ref. to GD(H4DOTC)-91, DTC P0246 TURBO/SUPER CHARGER WASTEGATE SOLENOID “A” HIGH, Diagnostic Trouble Code (DTC) Detecting Criteria.>
P0301	Cylinder 1 Misfire Detected	<Ref. to GD(H4DOTC)-92, DTC P0301 CYLINDER 1 MISFIRE DETECTED, Diagnostic Trouble Code (DTC) Detecting Criteria.>
P0302	Cylinder 2 Misfire Detected	<Ref. to GD(H4DOTC)-97, DTC P0302 CYLINDER 2 MISFIRE DETECTED, Diagnostic Trouble Code (DTC) Detecting Criteria.>
P0303	Cylinder 3 Misfire Detected	<Ref. to GD(H4DOTC)-97, DTC P0303 CYLINDER 3 MISFIRE DETECTED, Diagnostic Trouble Code (DTC) Detecting Criteria.>
P0304	Cylinder 4 Misfire Detected	<Ref. to GD(H4DOTC)-97, DTC P0304 CYLINDER 4 MISFIRE DETECTED, Diagnostic Trouble Code (DTC) Detecting Criteria.>
P0327	Knock Sensor 1 Circuit Low (Bank 1 or Single Sensor)	<Ref. to GD(H4DOTC)-98, DTC P0327 KNOCK SENSOR 1 CIRCUIT LOW (BANK 1 OR SINGLE SENSOR), Diagnostic Trouble Code (DTC) Detecting Criteria.>
P0328	Knock Sensor 1 Circuit High (Bank 1 or Single Sensor)	<Ref. to GD(H4DOTC)-100, DTC P0328 KNOCK SENSOR 1 CIRCUIT HIGH (BANK 1 OR SINGLE SENSOR), Diagnostic Trouble Code (DTC) Detecting Criteria.>
P0335	Crankshaft Position Sensor “A” Circuit	<Ref. to GD(H4DOTC)-102, DTC P0335 CRANKSHAFT POSITION SENSOR “A” CIRCUIT, Diagnostic Trouble Code (DTC) Detecting Criteria.>
P0336	Crankshaft Position Sensor “A” Circuit Range/Performance	<Ref. to GD(H4DOTC)-104, DTC P0336 CRANKSHAFT POSITION SENSOR “A” CIRCUIT RANGE/PERFORMANCE, Diagnostic Trouble Code (DTC) Detecting Criteria.>
P0340	Camshaft Position Sensor “A” Circuit (Bank 1 or Single Sensor)	<Ref. to GD(H4DOTC)-106, DTC P0340 CAMSHAFT POSITION SENSOR “A” CIRCUIT (BANK 1 OR SINGLE SENSOR), Diagnostic Trouble Code (DTC) Detecting Criteria.>
P0345	Camshaft Position Sensor “A” Circuit (Bank 2)	<Ref. to GD(H4DOTC)-107, DTC P0345 CAMSHAFT POSITION SENSOR “A” CIRCUIT (BANK 2), Diagnostic Trouble Code (DTC) Detecting Criteria.>
P0365	Camshaft Position Sensor “B” Circuit (Bank 1)	<Ref. to GD(H4DOTC)-108, DTC P0365 CAMSHAFT POSITION SENSOR “B” CIRCUIT (BANK 1), Diagnostic Trouble Code (DTC) Detecting Criteria.>
P0390	Camshaft Position Sensor “B” Circuit (Bank 2)	<Ref. to GD(H4DOTC)-109, DTC P0390 CAMSHAFT POSITION SENSOR “B” CIRCUIT (BANK 2), Diagnostic Trouble Code (DTC) Detecting Criteria.>
P0420	Catalyst System Efficiency Below Threshold (Bank 1)	<Ref. to GD(H4DOTC)-110, DTC P0420 CATALYST SYSTEM EFFICIENCY BELOW THRESHOLD (BANK 1), Diagnostic Trouble Code (DTC) Detecting Criteria.>

DTC	Item	Index
P0442	Evaporative Emission Control System Leak Detected (Small Leak)	<Ref. to GD(H4DOTC)-112, DTC P0442 EVAPORATIVE EMISSION CONTROL SYSTEM LEAK DETECTED (SMALL LEAK), Diagnostic Trouble Code (DTC) Detecting Criteria.>
P0447	Evaporative Emission Control System Vent Control Circuit Open	<Ref. to GD(H4DOTC)-128, DTC P0447 EVAPORATIVE EMISSION CONTROL SYSTEM VENT CONTROL CIRCUIT OPEN, Diagnostic Trouble Code (DTC) Detecting Criteria.>
P0448	Evaporative Emission Control System Vent Control Circuit Shorted	<Ref. to GD(H4DOTC)-130, DTC P0448 EVAPORATIVE EMISSION CONTROL SYSTEM VENT CONTROL CIRCUIT SHORTED, Diagnostic Trouble Code (DTC) Detecting Criteria.>
P0451	Evaporative Emission Control System Pressure Sensor	<Ref. to GD(H4DOTC)-132, DTC P0451 EVAPORATIVE EMISSION CONTROL SYSTEM PRESSURE SENSOR, Diagnostic Trouble Code (DTC) Detecting Criteria.>
P0452	Evaporative Emission Control System Pressure Sensor Low Input	<Ref. to GD(H4DOTC)-134, DTC P0452 EVAPORATIVE EMISSION CONTROL SYSTEM PRESSURE SENSOR LOW INPUT, Diagnostic Trouble Code (DTC) Detecting Criteria.>
P0453	Evaporative Emission Control System Pressure Sensor High Input	<Ref. to GD(H4DOTC)-136, DTC P0453 EVAPORATIVE EMISSION CONTROL SYSTEM PRESSURE SENSOR HIGH INPUT, Diagnostic Trouble Code (DTC) Detecting Criteria.>
P0456	Evaporative Emission Control System Leak Detected (Very Small Leak)	<Ref. to GD(H4DOTC)-137, DTC P0456 EVAPORATIVE EMISSION CONTROL SYSTEM LEAK DETECTED (VERY SMALL LEAK), Diagnostic Trouble Code (DTC) Detecting Criteria.>
P0457	Evaporative Emission Control System Leak Detected (Fuel Cap Loose/Off)	<Ref. to GD(H4DOTC)-137, DTC P0457 EVAPORATIVE EMISSION CONTROL SYSTEM LEAK DETECTED (FUEL CAP LOOSE/OFF), Diagnostic Trouble Code (DTC) Detecting Criteria.>
P0458	Evaporative Emission System Purge Control Valve Circuit Low	<Ref. to GD(H4DOTC)-138, DTC P0458 EVAPORATIVE EMISSION SYSTEM PURGE CONTROL VALVE CIRCUIT LOW, Diagnostic Trouble Code (DTC) Detecting Criteria.>
P0459	Evaporative Emission System Purge Control Valve Circuit High	<Ref. to GD(H4DOTC)-140, DTC P0459 EVAPORATIVE EMISSION SYSTEM PURGE CONTROL VALVE CIRCUIT HIGH, Diagnostic Trouble Code (DTC) Detecting Criteria.>
P0461	Fuel Level Sensor “A” Circuit Range/Performance	<Ref. to GD(H4DOTC)-142, DTC P0461 FUEL LEVEL SENSOR “A” CIRCUIT RANGE/PERFORMANCE, Diagnostic Trouble Code (DTC) Detecting Criteria.>
P0462	Fuel Level Sensor “A” Circuit Low	<Ref. to GD(H4DOTC)-144, DTC P0462 FUEL LEVEL SENSOR “A” CIRCUIT LOW, Diagnostic Trouble Code (DTC) Detecting Criteria.>
P0463	Fuel Level Sensor “A” Circuit High	<Ref. to GD(H4DOTC)-146, DTC P0463 FUEL LEVEL SENSOR “A” CIRCUIT HIGH, Diagnostic Trouble Code (DTC) Detecting Criteria.>
P0464	Fuel Level Sensor Circuit Intermittent	<Ref. to GD(H4DOTC)-148, DTC P0464 FUEL LEVEL SENSOR CIRCUIT INTERMITTENT, Diagnostic Trouble Code (DTC) Detecting Criteria.>
P0500	Vehicle Speed Sensor “A”	<Ref. to GD(H4DOTC)-151, DTC P0500 VEHICLE SPEED SENSOR “A”, Diagnostic Trouble Code (DTC) Detecting Criteria.>
P0506	Idle Air Control System RPM Lower Than Expected	<Ref. to GD(H4DOTC)-152, DTC P0506 IDLE AIR CONTROL SYSTEM RPM LOWER THAN EXPECTED, Diagnostic Trouble Code (DTC) Detecting Criteria.>
P0507	Idle Air Control System RPM Higher Than Expected	<Ref. to GD(H4DOTC)-153, DTC P0507 IDLE AIR CONTROL SYSTEM RPM HIGHER THAN EXPECTED, Diagnostic Trouble Code (DTC) Detecting Criteria.>
P0512	Starter Request Circuit	<Ref. to GD(H4DOTC)-154, DTC P0512 STARTER REQUEST CIRCUIT, Diagnostic Trouble Code (DTC) Detecting Criteria.>
P0513	Incorrect Immobilizer Key	<Ref. to GD(H4DOTC)-155, DTC P0513 INCORRECT IMMOBILIZER KEY, Diagnostic Trouble Code (DTC) Detecting Criteria.>
P0604	Internal Control Module Random Access Memory (RAM) Error	<Ref. to GD(H4DOTC)-156, DTC P0604 INTERNAL CONTROL MODULE RANDOM ACCESS MEMORY (RAM) ERROR, Diagnostic Trouble Code (DTC) Detecting Criteria.>

DTC	Item	Index
P0605	Internal Control Module Read Only Memory (ROM) Error	<Ref. to GD(H4DOTC)-157, DTC P0605 INTERNAL CONTROL MODULE READ ONLY MEMORY (ROM) ERROR, Diagnostic Trouble Code (DTC) Detecting Criteria.>
P0607	Throttle Control System Circuit Range/Performance	<Ref. to GD(H4DOTC)-158, DTC P0607 THROTTLE CONTROL SYSTEM CIRCUIT RANGE/PERFORMANCE, Diagnostic Trouble Code (DTC) Detecting Criteria.>
P0638	Throttle Actuator Control Range/ Performance (Bank 1)	<Ref. to GD(H4DOTC)-160, DTC P0638 THROTTLE ACTUATOR CONTROL RANGE/PERFORMANCE (BANK 1), Diagnostic Trouble Code (DTC) Detecting Criteria.>
P0851	Neutral Switch Input Circuit Low (MT Model)	<Ref. to GD(H4DOTC)-162, DTC P0851 NEUTRAL SWITCH INPUT CIRCUIT LOW (MT MODEL), Diagnostic Trouble Code (DTC) Detecting Criteria.>
P0852	Neutral Switch Input Circuit High (MT Model)	<Ref. to GD(H4DOTC)-163, DTC P0852 NEUTRAL SWITCH INPUT CIRCUIT HIGH (MT MODEL), Diagnostic Trouble Code (DTC) Detecting Criteria.>
P1152	O2 Sensor Circuit Range/Performance (Low) (Bank1 Sensor1)	<Ref. to GD(H4DOTC)-164, DTC P1152 O2 SENSOR CIRCUIT RANGE/ PERFORMANCE (LOW) (BANK1 SENSOR1), Diagnostic Trouble Code (DTC) Detecting Criteria.>
P1153	O2 Sensor Circuit Range/Performance (High) (Bank1 Sensor1)	<Ref. to GD(H4DOTC)-166, DTC P1153 O2 SENSOR CIRCUIT RANGE/ PERFORMANCE (HIGH) (BANK1 SENSOR1), Diagnostic Trouble Code (DTC) Detecting Criteria.>
P1160	Return Spring Failure	<Ref. to GD(H4DOTC)-168, DTC P1160 RETURN SPRING FAILURE, Diagnostic Trouble Code (DTC) Detecting Criteria.>
P1400	Fuel Tank Pressure Control Solenoid Valve Circuit Low	<Ref. to GD(H4DOTC)-170, DTC P1400 FUEL TANK PRESSURE CONTROL SOLENOID VALVE CIRCUIT LOW, Diagnostic Trouble Code (DTC) Detecting Criteria.>
P1420	Fuel Tank Pressure Control Sol. Valve Circuit High	<Ref. to GD(H4DOTC)-172, DTC P1420 FUEL TANK PRESSURE CONTROL SOL. VALVE CIRCUIT HIGH, Diagnostic Trouble Code (DTC) Detecting Criteria.>
P1443	Vent Control Solenoid Valve Function Problem	<Ref. to GD(H4DOTC)-174, DTC P1443 VENT CONTROL SOLENOID VALVE FUNCTION PROBLEM, Diagnostic Trouble Code (DTC) Detecting Criteria.>
P1518	Starter Switch Circuit Low Input	<Ref. to GD(H4DOTC)-176, DTC P1518 STARTER SWITCH CIRCUIT LOW INPUT, Diagnostic Trouble Code (DTC) Detecting Criteria.>
P1560	Back-Up Voltage Circuit Malfunction	<Ref. to GD(H4DOTC)-177, DTC P1560 BACK-UP VOLTAGE CIRCUIT MALFUNCTION, Diagnostic Trouble Code (DTC) Detecting Criteria.>
P1570	Antenna	<Ref. to GD(H4DOTC)-178, DTC P1570 ANTENNA, Diagnostic Trouble Code (DTC) Detecting Criteria.>
P1571	Reference Code Incompatibility	<Ref. to GD(H4DOTC)-178, DTC P1571 REFERENCE CODE INCOMPATIBILITY, Diagnostic Trouble Code (DTC) Detecting Criteria.>
P1572	IMM Circuit Failure	<Ref. to GD(H4DOTC)-178, DTC P1572 IMM CIRCUIT FAILURE (EXCEPT ANTENNA CIRCUIT), Diagnostic Trouble Code (DTC) Detecting Criteria.>
P1574	Key Communication Failure	<Ref. to GD(H4DOTC)-178, DTC P1574 KEY COMMUNICATION FAILURE, Diagnostic Trouble Code (DTC) Detecting Criteria.>
P1576	EGI Control Module EEPROM	<Ref. to GD(H4DOTC)-178, DTC P1576 EGI CONTROL MODULE EEPROM, Diagnostic Trouble Code (DTC) Detecting Criteria.>
P1577	IMM Control Module EEPROM	<Ref. to GD(H4DOTC)-178, DTC P1577 IMM CONTROL MODULE EEPROM, Diagnostic Trouble Code (DTC) Detecting Criteria.>
P1578	Meter Failure	<Ref. to GD(H4DOTC)-178, DTC P1578 METER FAILURE, Diagnostic Trouble Code (DTC) Detecting Criteria.>
P1602	Control Module Programming Error	<Ref. to GD(H4DOTC)-179, DTC P1602 CONTROL MODULE PROGRAMMING ERROR, Diagnostic Trouble Code (DTC) Detecting Criteria.>
P2004	Intake Manifold Runner Control Stuck Open (Bank 1)	<Ref. to GD(H4DOTC)-181, DTC P2004 INTAKE MANIFOLD RUNNER CONTROL STUCK OPEN (BANK 1), Diagnostic Trouble Code (DTC) Detecting Criteria.>

DTC	Item	Index
P2005	Intake Manifold Runner Control Stuck Open (Bank 2)	<Ref. to GD(H4DOTC)-182, DTC P2005 INTAKE MANIFOLD RUNNER CONTROL STUCK OPEN (BANK 2), Diagnostic Trouble Code (DTC) Detecting Criteria.>
P2006	Intake Manifold Runner Control Stuck Closed (Bank 1)	<Ref. to GD(H4DOTC)-183, DTC P2006 INTAKE MANIFOLD RUNNER CONTROL STUCK CLOSED (BANK 1), Diagnostic Trouble Code (DTC) Detecting Criteria.>
P2007	Intake Manifold Runner Control Stuck Closed (Bank 2)	<Ref. to GD(H4DOTC)-184, DTC P2007 INTAKE MANIFOLD RUNNER CONTROL STUCK CLOSED (BANK 2), Diagnostic Trouble Code (DTC) Detecting Criteria.>
P2008	Intake Manifold Runner Control Circuit / Open (Bank 1)	<Ref. to GD(H4DOTC)-185, DTC P2008 INTAKE MANIFOLD RUNNER CONTROL CIRCUIT / OPEN (BANK 1), Diagnostic Trouble Code (DTC) Detecting Criteria.>
P2009	Intake Manifold Runner Control Circuit Low (Bank 1)	<Ref. to GD(H4DOTC)-186, DTC P2009 INTAKE MANIFOLD RUNNER CONTROL CIRCUIT LOW (BANK 1), Diagnostic Trouble Code (DTC) Detecting Criteria.>
P2011	Intake Manifold Runner Control Circuit / Open (Bank 2)	<Ref. to GD(H4DOTC)-187, DTC P2011 INTAKE MANIFOLD RUNNER CONTROL CIRCUIT / OPEN (BANK 2), Diagnostic Trouble Code (DTC) Detecting Criteria.>
P2012	Intake Manifold Runner Control Circuit Low (Bank 2)	<Ref. to GD(H4DOTC)-188, DTC P2012 INTAKE MANIFOLD RUNNER CONTROL CIRCUIT LOW (BANK 2), Diagnostic Trouble Code (DTC) Detecting Criteria.>
P2016	Intake Manifold Runner Position Sensor / Switch Circuit Low (Bank 1)	<Ref. to GD(H4DOTC)-189, DTC P2016 INTAKE MANIFOLD RUNNER POSITION SENSOR / SWITCH CIRCUIT LOW (BANK 1), Diagnostic Trouble Code (DTC) Detecting Criteria.>
P2017	Intake Manifold Runner Position Sensor / Switch Circuit High (Bank 1)	<Ref. to GD(H4DOTC)-191, DTC P2017 INTAKE MANIFOLD RUNNER POSITION SENSOR / SWITCH CIRCUIT HIGH (BANK 1), Diagnostic Trouble Code (DTC) Detecting Criteria.>
P2021	Intake Manifold Runner Position Sensor / Switch Circuit Low (Bank 2)	<Ref. to GD(H4DOTC)-192, DTC P2021 INTAKE MANIFOLD RUNNER POSITION SENSOR / SWITCH CIRCUIT LOW (BANK 2), Diagnostic Trouble Code (DTC) Detecting Criteria.>
P2022	Intake Manifold Runner Position Sensor / Switch Circuit High (Bank 2)	<Ref. to GD(H4DOTC)-193, DTC P2022 INTAKE MANIFOLD RUNNER POSITION SENSOR / SWITCH CIRCUIT HIGH (BANK 2), Diagnostic Trouble Code (DTC) Detecting Criteria.>
P2088	Intake Camshaft Position Actuator Control Circuit Low (Bank 1)	<Ref. to GD(H4DOTC)-194, DTC P2088 INTAKE CAMSHAFT POSITION ACTUATOR CONTROL CIRCUIT LOW (BANK 1), Diagnostic Trouble Code (DTC) Detecting Criteria.>
P2089	Intake Camshaft Position Actuator Control Circuit High (Bank 1)	<Ref. to GD(H4DOTC)-195, DTC P2089 INTAKE CAMSHAFT POSITION ACTUATOR CONTROL CIRCUIT HIGH (BANK 1), Diagnostic Trouble Code (DTC) Detecting Criteria.>
P2090	Exhaust Camshaft Position Actuator Control Circuit Low (Bank 1)	<Ref. to GD(H4DOTC)-196, DTC P2090 EXHAUST CAMSHAFT POSITION ACTUATOR CONTROL CIRCUIT LOW (BANK 1), Diagnostic Trouble Code (DTC) Detecting Criteria.>
P2091	Exhaust Camshaft Position Actuator Control Circuit High (Bank 1)	<Ref. to GD(H4DOTC)-197, DTC P2091 EXHAUST CAMSHAFT POSITION ACTUATOR CONTROL CIRCUIT HIGH (BANK 1), Diagnostic Trouble Code (DTC) Detecting Criteria.>
P2092	Intake Camshaft Position Actuator Control Circuit Low (Bank 2)	<Ref. to GD(H4DOTC)-198, DTC P2092 INTAKE CAMSHAFT POSITION ACTUATOR CONTROL CIRCUIT LOW (BANK 2), Diagnostic Trouble Code (DTC) Detecting Criteria.>
P2093	Intake Camshaft Position Actuator Control Circuit High (Bank 2)	<Ref. to GD(H4DOTC)-198, DTC P2093 INTAKE CAMSHAFT POSITION ACTUATOR CONTROL CIRCUIT HIGH (BANK 2), Diagnostic Trouble Code (DTC) Detecting Criteria.>
P2094	Exhaust Camshaft Position Actuator Control Circuit Low (Bank 2)	<Ref. to GD(H4DOTC)-198, DTC P2094 EXHAUST CAMSHAFT POSITION ACTUATOR CONTROL CIRCUIT LOW (BANK 2), Diagnostic Trouble Code (DTC) Detecting Criteria.>
P2095	Exhaust Camshaft Position Actuator Control Circuit High (Bank 2)	<Ref. to GD(H4DOTC)-198, DTC P2095 EXHAUST CAMSHAFT POSITION ACTUATOR CONTROL CIRCUIT HIGH (BANK 2), Diagnostic Trouble Code (DTC) Detecting Criteria.>

DTC	Item	Index
P2096	Post Catalyst Fuel Trim System Too Lean (Bank 1)	<Ref. to GD(H4DOTC)-199, DTC P2096 POST CATALYST FUEL TRIM SYSTEM TOO LEAN (BANK 1), Diagnostic Trouble Code (DTC) Detecting Criteria.>
P2097	Post Catalyst Fuel Trim System Too Rich (Bank 1)	<Ref. to GD(H4DOTC)-201, DTC P2097 POST CATALYST FUEL TRIM SYSTEM TOO RICH (BANK 1), Diagnostic Trouble Code (DTC) Detecting Criteria.>
P2101	Throttle Actuator Control Motor Circuit Range/Performance	<Ref. to GD(H4DOTC)-203, DTC P2101 THROTTLE ACTUATOR CONTROL MOTOR CIRCUIT RANGE/PERFORMANCE, Diagnostic Trouble Code (DTC) Detecting Criteria.>
P2102	Throttle Actuator Control Motor Circuit Low	<Ref. to GD(H4DOTC)-205, DTC P2102 THROTTLE ACTUATOR CONTROL MOTOR CIRCUIT LOW, Diagnostic Trouble Code (DTC) Detecting Criteria.>
P2103	Throttle Actuator Control Motor Circuit High	<Ref. to GD(H4DOTC)-207, DTC P2103 THROTTLE ACTUATOR CONTROL MOTOR CIRCUIT HIGH, Diagnostic Trouble Code (DTC) Detecting Criteria.>
P2109	Throttle/Pedal Position Sensor “A” Minimum Stop Performance	<Ref. to GD(H4DOTC)-209, DTC P2109 THROTTLE/PEDAL POSITION SENSOR “A” MINIMUM STOP PERFORMANCE, Diagnostic Trouble Code (DTC) Detecting Criteria.>
P2122	Throttle/Pedal Position Sensor/ Switch “D” Circuit Low Input	<Ref. to GD(H4DOTC)-211, DTC P2122 THROTTLE/PEDAL POSITION SENSOR/SWITCH “D” CIRCUIT LOW INPUT, Diagnostic Trouble Code (DTC) Detecting Criteria.>
P2123	Throttle/Pedal Position Sensor/ Switch “D” Circuit High Input	<Ref. to GD(H4DOTC)-213, DTC P2123 THROTTLE/PEDAL POSITION SENSOR/SWITCH “D” CIRCUIT HIGH INPUT, Diagnostic Trouble Code (DTC) Detecting Criteria.>
P2127	Throttle/Pedal Position Sensor/ Switch “E” Circuit Low Input	<Ref. to GD(H4DOTC)-215, DTC P2127 THROTTLE/PEDAL POSITION SENSOR/SWITCH “E” CIRCUIT LOW INPUT, Diagnostic Trouble Code (DTC) Detecting Criteria.>
P2128	Throttle/Pedal Position Sensor/ Switch “E” Circuit High Input	<Ref. to GD(H4DOTC)-217, DTC P2128 THROTTLE/PEDAL POSITION SENSOR/SWITCH “E” CIRCUIT HIGH INPUT, Diagnostic Trouble Code (DTC) Detecting Criteria.>
P2135	Throttle/Pedal Position Sensor/ Switch “A”/“B” Voltage Correlation	<Ref. to GD(H4DOTC)-219, DTC P2135 THROTTLE/PEDAL POSITION SENSOR/SWITCH “A”/“B” VOLTAGE CORRELATION, Diagnostic Trouble Code (DTC) Detecting Criteria.>
P2138	Throttle/Pedal Position Sensor/ Switch “D”/“E” Voltage Correlation	<Ref. to GD(H4DOTC)-221, DTC P2138 THROTTLE/PEDAL POSITION SENSOR/SWITCH “D”/“E” VOLTAGE CORRELATION, Diagnostic Trouble Code (DTC) Detecting Criteria.>
P2227	Atmospheric Pressure Sensor Range/Performance	<Ref. to GD(H4DOTC)-223, DTC P2227 BAROMETRIC PRESSURE CIRCUIT RANGE/PERFORMANCE, Diagnostic Trouble Code (DTC) Detecting Criteria.>
P2228	Barometric Pressure Circuit Low	<Ref. to GD(H4DOTC)-224, DTC P2228 BAROMETRIC PRESSURE CIRCUIT LOW, Diagnostic Trouble Code (DTC) Detecting Criteria.>
P2229	Barometric Pressure Circuit High	<Ref. to GD(H4DOTC)-225, DTC P2229 BAROMETRIC PRESSURE CIRCUIT HIGH, Diagnostic Trouble Code (DTC) Detecting Criteria.>
P2419	Evaporative Emission System Switching Valve Control Circuit Low	<Ref. to GD(H4DOTC)-226, DTC P2419 EVAPORATIVE EMISSION SYSTEM SWITCHING VALVE CONTROL CIRCUIT LOW, Diagnostic Trouble Code (DTC) Detecting Criteria.>
P2420	Evaporative Emission System Switching Valve Control Circuit High	<Ref. to GD(H4DOTC)-227, DTC P2420 EVAPORATIVE EMISSION SYSTEM SWITCHING VALVE CONTROL CIRCUIT HIGH, Diagnostic Trouble Code (DTC) Detecting Criteria.>
U0073	CAN Failure, Bus ‘OFF’ Detection	<Ref. to GD(H4DOTC)-228, DTC U0073 CAN FAILURE, BUS ‘OFF’ DETECTION, Diagnostic Trouble Code (DTC) Detecting Criteria.>
U0101	CAN (TCU) Data not Loaded	<Ref. to GD(H4DOTC)-229, DTC U0101 CAN (TCU) DATA NOT LOADED, Diagnostic Trouble Code (DTC) Detecting Criteria.>
U0122	CAN (VDC) Data not Loaded	<Ref. to GD(H4DOTC)-229, DTC U0122 CAN (VDC) DATA NOT LOADED, Diagnostic Trouble Code (DTC) Detecting Criteria.>

DTC	Item	Index
U0140	CAN (BCU) Data not Loaded	<Ref. to GD(H4DOTC)-229, DTC U0140 CAN (BCU) DATA NOT LOADED, Diagnostic Trouble Code (DTC) Detecting Criteria.>
U0402	CAN (TCU) Data Abnormal	<Ref. to GD(H4DOTC)-229, DTC U0402 CAN (TCU) DATA ABNORMAL, Diagnostic Trouble Code (DTC) Detecting Criteria.>
U0416	CAN (VDC) Data Abnormal	<Ref. to GD(H4DOTC)-229, DTC U0416 CAN (VDC) DATA ABNORMAL, Diagnostic Trouble Code (DTC) Detecting Criteria.>
U0422	CAN (BCU) Data Abnormal	<Ref. to GD(H4DOTC)-229, DTC U0422 CAN (BCU) DATA ABNORMAL, Diagnostic Trouble Code (DTC) Detecting Criteria.>

2. Diagnostic Trouble Code (DTC) Detecting Criteria

A: DTC P0011 INTAKE CAMSHAFT POSITION - TIMING OVER-ADVANCED OR SYSTEM PERFORMANCE (BANK 1)

1. OUTLINE OF DIAGNOSIS

Detect the AVCS system malfunction.
Judge NG when the amount of AVCS actual timing advance does not approach to the amount of AVCS target timing advance.

2. COMPONENT DESCRIPTION

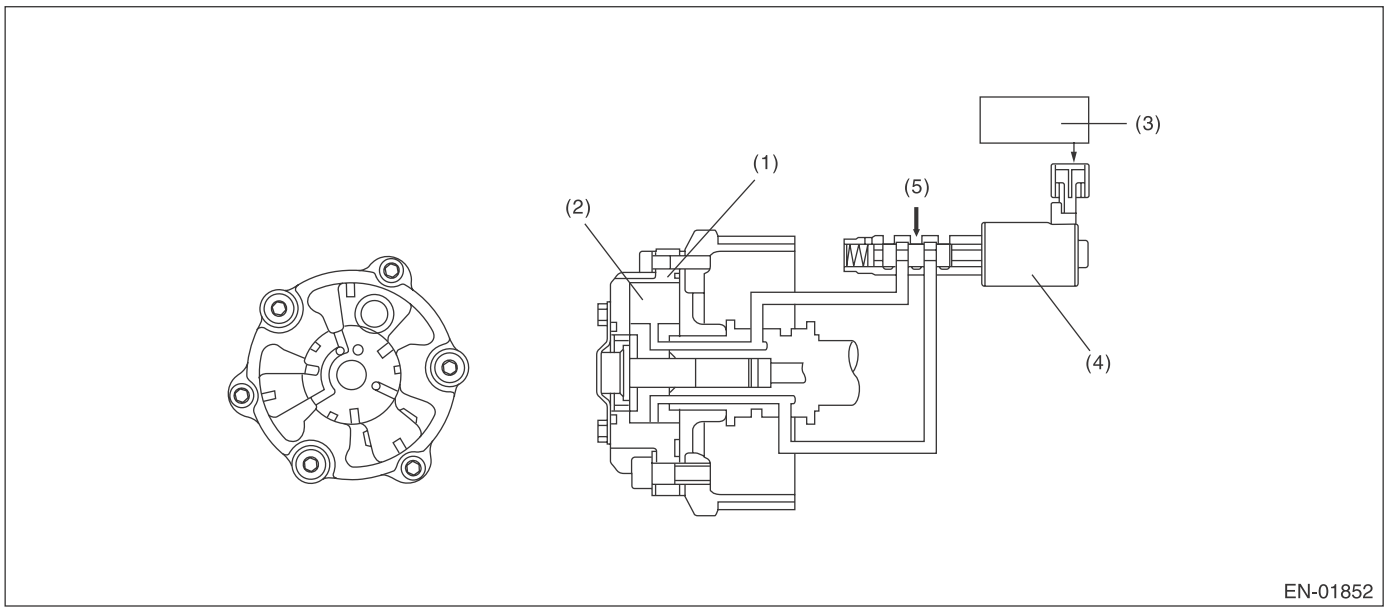

(1) AVCS timing controller
(2) Vane
(3) Engine control module (ECM)
(4) Oil flow control solenoid valve
(5) Oil pressure

3. ENABLE CONDITION

Secondary Parameters	Enable Conditions
Time of establishing all secondary parameter conditions	≥ 3000 ms
Battery voltage	≥ 10.9 V
Engine speed	≥ 1500 rpm
Engine coolant temperature	≥ 20 °C (68 °F)
AVCS control	Operation
Target timing advance change amount (per 64 ms)	< 1.07 °CA

4. GENERAL DRIVING CYCLE

Perform the diagnosis continuously after warming up when the engine speed increases and AVCS operates.

5. DIAGNOSTIC METHOD

1) When the conditions during which the differences of AVCS target timing advance amount and AVCS actual timing advance amount is large continues for certain amount of time.
2) When the differences of target timing advance amount and actual timing advance amount is calculated during AVCS control, and the difference per predetermined time is the specified value or larger.

- **Abnormality Judgment**

Judge as NG when the following conditions are established within the predetermined time.

Judgment Value

Malfunction Criteria	Threshold Value
Σ(Target position – Actual position)	> 4500 °CA (Bank 1) > 4500 °CA (Bank 2)
or	
Σ(Target position – Actual position)	< –7000 °CA (Bank 1) < –7000 °CA (Bank 2)

Time Needed for Diagnosis: 30000 ms
Malfunction Indicator Light Illumination: Illuminates when malfunction occurs in 2 continuous driving cycles.

- **Normality Judgment**

Judge as OK and clear the NG if the following conditions are established within the predetermined time.

Judgment Value

Malfunction Criteria	Threshold Value
Σ(Target position – Actual position)	≤ 4500 °CA (Bank 1) ≤ 4500 °CA (Bank 2) and ≥ –7000 °CA (Bank 1) ≥ –7000 °CA (Bank 2)

Time Needed for Diagnosis: 30000 ms

B: DTC P0014 EXHAUST AVCS SYSTEM 1 (RANGE/PERFORMANCE)

1. OUTLINE OF DIAGNOSIS

Detect the exhaust AVCS system malfunction.
Judge NG when the amount of exhaust AVCS actual timing advance does not approach the amount of exhaust AVCS target timing advance.

2. COMPONENT DESCRIPTION

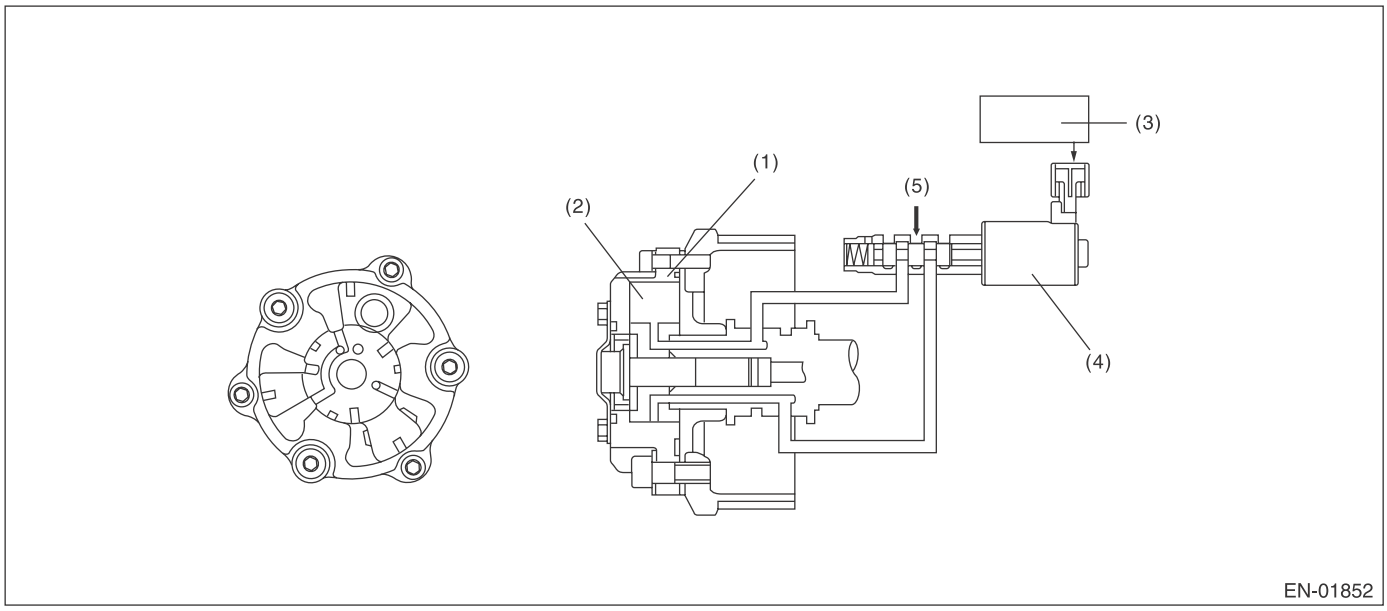

(1) Exhaust AVCS timing controller
(2) Vane
(3) Engine control module (ECM)
(4) Oil flow control solenoid valve
(5) Oil pressure

3. ENABLE CONDITIONS

Secondary Parameters	Enable Conditions
Time of establishing all secondary parameter conditions	≥ 3000 ms
Battery voltage	≥ 10.9 V
Engine speed	≥ 1500 rpm
Engine coolant temperature	≥ 20 °C (68 °F)
Exhaust AVCS control	Operation
Target timing advance change amount (per 64 ms)	< 1.07 °CA

4. GENERAL DRIVING CYCLE

Perform the diagnosis continuously after warming up when the engine speed increases and exhaust AVCS operates.

5. DIAGNOSTIC METHOD

1) When the conditions during which the differences of exhaust AVCS target timing advance amount and exhaust AVCS actual timing advance amount is large continues for certain amount of time.
2) When the differences of target timing advance amount and actual timing advance amount is calculated during exhaust AVCS control, and the difference per predetermined time is the specified value or larger.

- **Abnormality Judgment**

Judge as NG when the following conditions are established within the predetermined time.

Judgment Value

Malfunction Criteria	Threshold Value
Σ(Target position – Actual position)	> 6000 °CA (Bank 1) > 6000 °CA (Bank 2)
or	
Σ(Target position – Actual position)	< –6000 °CA (Bank 1) < –6000 °CA (Bank 2)

Time Needed for Diagnosis:
30000 ms
Malfunction Indicator Light Illumination: Illuminates when malfunction occurs in 2 continuous driving cycles.

- **Normality Judgment**

Judge as OK and clear the NG if the following conditions are established within the predetermined time.

Judgment Value

Malfunction Criteria	Threshold Value
Σ(Target position – Actual position)	≤ 6000 °CA (Bank 1) ≤ 6000 °CA (Bank 2) and ≥ –6000 °CA (Bank 1) ≥ –6000 °CA (Bank 2)

Time Needed for Diagnosis: 30000 ms

C: DTC P0016 CRANKSHAFT POSITION - CAMSHAFT POSITION CORRELATION (BANK1)

1. OUTLINE OF DIAGNOSIS

Detect the AVCS system malfunction.
Judge as NG when standard timing advance amount is far from learning angle.

2. COMPONENT DESCRIPTION

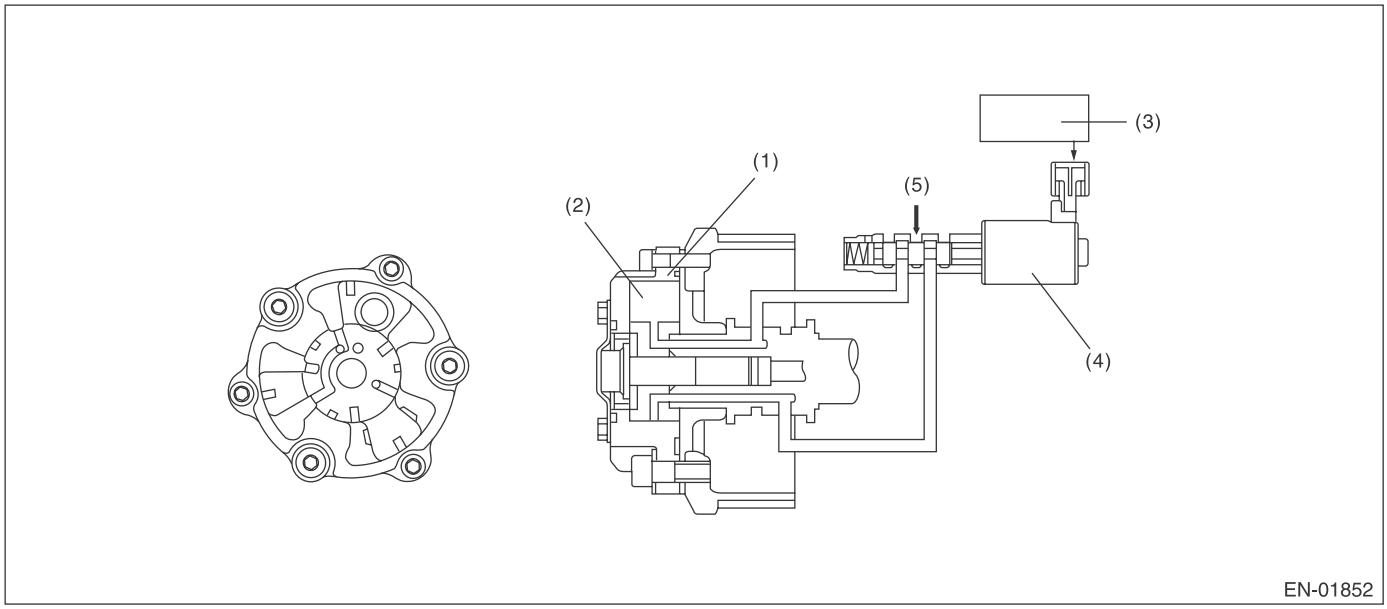

(1) AVCS timing controller
(2) Vane
(3) Engine control module (ECM)
(4) Oil flow control solenoid valve
(5) Hydraulic pressure

3. ENABLE CONDITION

Secondary Parameters	Enable Conditions
Battery voltage	≥ 10.9 V
Engine speed	≥ 600 rpm and < 975 rpm
Engine coolant temperature	≥ 72 °C (161.6 °F)
AVCS control	Not in operation
Target timing advance	0°CA

4. GENERAL DRIVING CYCLE

Perform the diagnosis continuously after starting engine and while AVCS is not operating.

5. DIAGNOSTIC METHOD

Judge as NG when the absolute value of the difference between cam signal input position and learning value is out of specification.

- **Abnormality Judgment**

If the duration of time while the following conditions are met is longer than the time indicated, judge as NG.

Judgment Value

Malfunction Criteria	Threshold Value
|Crankshaft position when camshaft position sensor signal is input – Learning value|	> 9 °CA

Time Needed for Diagnosis: 20000 ms
Malfunction Indicator Light Illumination: Illuminates when malfunction occurs in 2 continuous driving cycles.

NOTE:
Initial standard learning value is the value of crank angle initially input at the production plant. And then it will be updated every time normal judgment has been completed. Learning value will not be updated if NG judgment occurs because timing belt or chain derails suddenly in process or because wrong assembly occurs during servicing.

- **Normality Judgment**

Judge as OK and clear the NG if the continuous time while the following conditions are established is more than the predetermined time.

Judgment Value

Malfunction Criteria	Threshold Value
|Crankshaft position when camshaft position sensor signal is input – Learning value|	≤ 9 °CA

Time Needed for Diagnosis: Less than 1 second

D: DTC P0017 CRANK AND CAM TIMING B SYSTEM FAILURE (BANK 1)

1. OUTLINE OF DIAGNOSIS

Detect the exhaust AVCS system malfunction.
Judge as NG when standard timing advance amount is far from learning angle.

2. COMPONENT DESCRIPTION

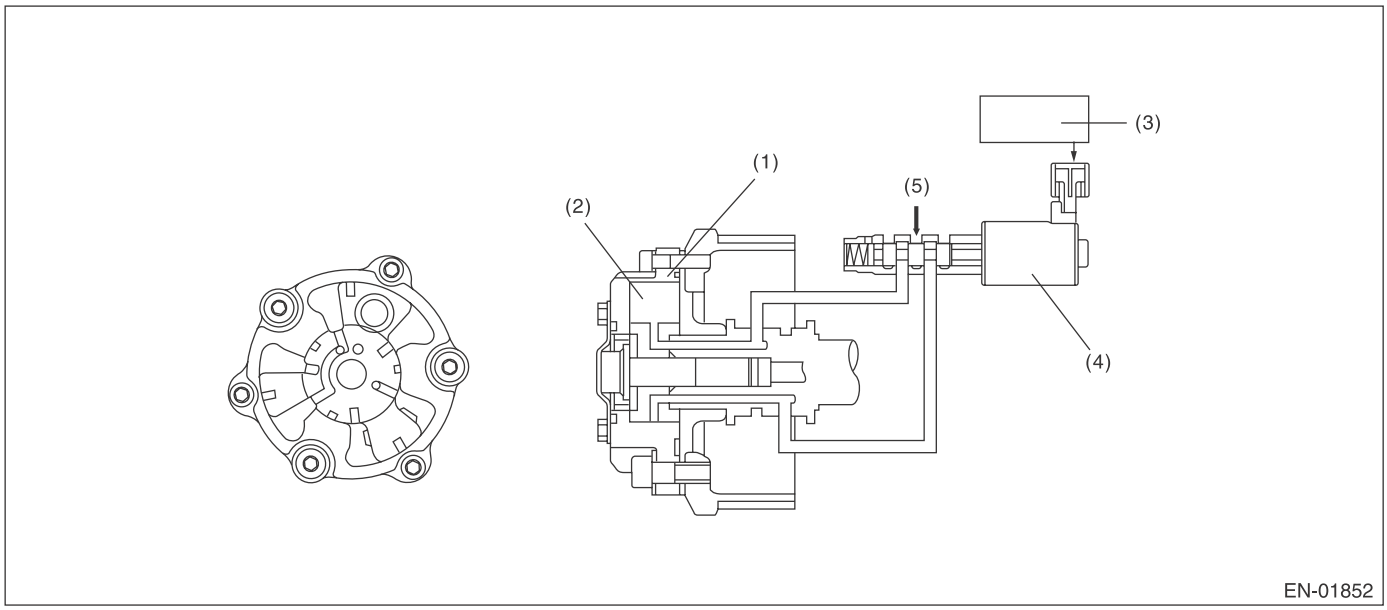

(1) Exhaust AVCS timing controller
(2) Vane
(3) Engine control module (ECM)
(4) Oil flow control solenoid valve
(5) Oil pressure

3. ENABLE CONDITIONS

Secondary Parameters	Enable Conditions
Battery voltage	≥ 10.9 V
Engine speed	≥ 600 rpm and < 975 rpm
Engine coolant temperature	≥ 72 °C (161.6 °F)
Exhaust AVCS control	Not in operation
Target timing advance	0°CA

4. GENERAL DRIVING CYCLE

Perform the diagnosis continuously while the exhaust AVCS is not operating after warming up.

5. DIAGNOSTIC METHOD

Judge as NG when the absolute value of the difference between cam signal input position and learning value is out of specification.

- **Abnormality Judgment**

If the duration of time while the following conditions are met is longer than the time indicated, judge as NG.

Judgment Value

Malfunction Criteria	Threshold Value
|Crankshaft position when camshaft position sensor signal is input – Learning value|	> 9 °CA

Time Needed for Diagnosis: 20000 ms
Malfunction Indicator Light Illumination: Illuminates when malfunction occurs in 2 continuous driving cycles.

NOTE:
Initial standard learning value is the value of crank angle initially input at the production plant. And then it will be updated every time normal judgment has been completed. Learning value will not be updated if NG judgment occurs because timing belt or chain derails suddenly in process or because wrong assembly occurs during servicing.

- **Normality Judgment**

Judge as OK and clear the NG if the continuous time while the following conditions are established is more than the predetermined time.

Judgment Value

Malfunction Criteria	Threshold Value
|Crankshaft position when camshaft position sensor signal is input – Learning value|	≤ 9 °CA

Time Needed for Diagnosis: Less than 1 second

E: DTC P0018 CRANKSHAFT POSITION - CAMSHAFT POSITION CORRELATION (BANK2)

1. OUTLINE OF DIAGNOSIS

NOTE:
For the detection standard, refer to DTC P0016. <Ref. to GD(H4DOTC)-14, DTC P0016 CRANKSHAFT POSITION - CAMSHAFT POSITION CORRELATION (BANK1), Diagnostic Trouble Code (DTC) Detecting Criteria.>

F: DTC P0019 CRANK AND CAM TIMING B SYSTEM FAILURE (BANK 2)

1. OUTLINE OF DIAGNOSIS

NOTE:
For the detection standard, refer to DTC P0017. <Ref. to GD(H4DOTC)-16, DTC P0017 CRANK AND CAM TIMING B SYSTEM FAILURE (BANK 1), Diagnostic Trouble Code (DTC) Detecting Criteria.>

G: DTC P0021 INTAKE CAMSHAFT POSITION - TIMING OVER-ADVANCED OR SYSTEM PERFORMANCE (BANK 2)

1. OUTLINE OF DIAGNOSIS

NOTE:
For the detection standard, refer to DTC P0011. <Ref. to GD(H4DOTC)-10, DTC P0011 INTAKE CAMSHAFT POSITION - TIMING OVER-ADVANCED OR SYSTEM PERFORMANCE (BANK 1), Diagnostic Trouble Code (DTC) Detecting Criteria.>

H: DTC P0024 EXHAUST AVCS SYSTEM 2 (RANGE/PERFORMANCE)

1. OUTLINE OF DIAGNOSIS

NOTE:
For the detection standard, refer to DTC P0014. <Ref. to GD(H4DOTC)-12, DTC P0014 EXHAUST AVCS SYSTEM 1 (RANGE/PERFORMANCE), Diagnostic Trouble Code (DTC) Detecting Criteria.>

I: DTC P0030 HO2S HEATER CONTROL CIRCUIT (BANK 1 SENSOR 1)

1. OUTLINE OF DIAGNOSIS

Detect functional errors of the front oxygen (A/F) sensor heater.
Judge as NG when it is determined that the front oxygen (A/F) sensor impedance is large when looking at engine status such as deceleration fuel cut.

2. COMPONENT DESCRIPTION

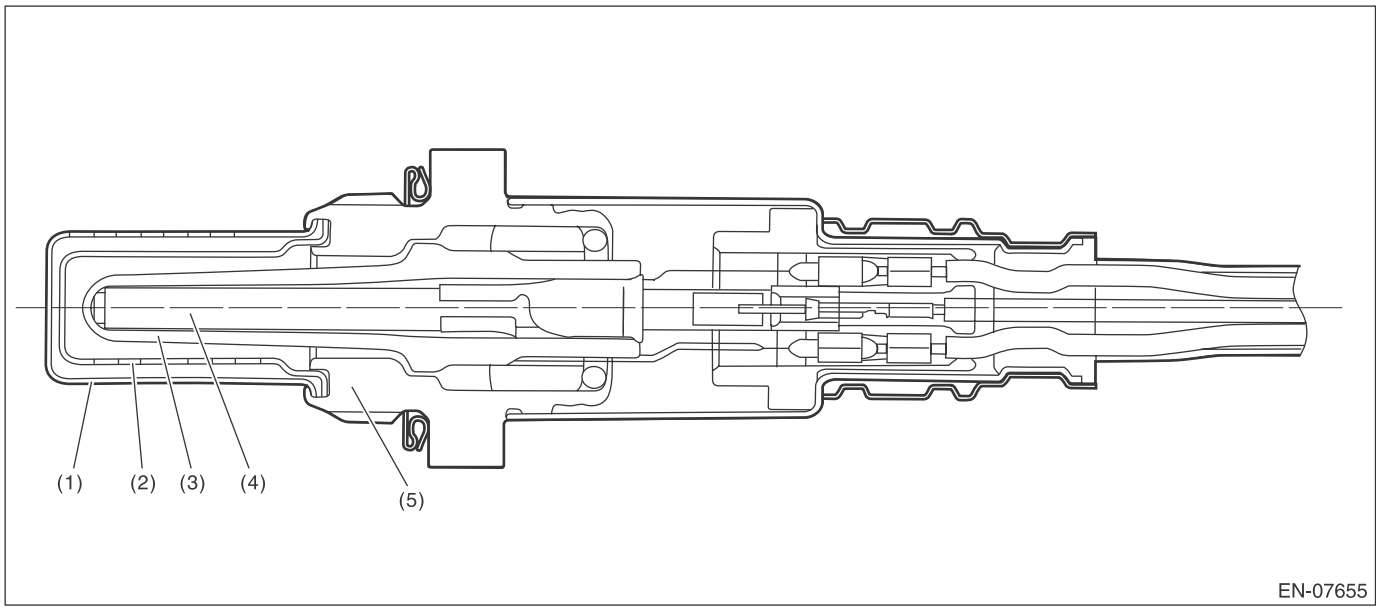

(1) Element cover (outer)
(2) Element cover (inner)
(3) Sensor element
(4) Ceramic heater
(5) Sensor housing

3. ENABLE CONDITION

Secondary Parameters	Enable Conditions
Condition established time	≥ 42000 ms
Battery voltage	≥ 10.9 V
Heater current	Permitted
Control duty ≥ 35 %	Experienced
After fuel cut	≥ 20000 ms

4. GENERAL DRIVING CYCLE

Perform the diagnosis continuously after 42000 ms seconds or more have passed since the engine started.

5. DIAGNOSTIC METHOD

• Abnormality Judgment

If the duration of time while the following conditions are met is longer than the time indicated, judge as NG.

Judgment Value

Malfunction Criteria	Threshold Value
Front oxygen (A/F) sensor impedance	> 50 Ω

Time Needed for Diagnosis: 10000 ms
Malfunction Indicator Light Illumination: Illuminates when malfunction occurs in 2 continuous driving cycles.

• Normality Judgment

Judge as OK and clear the NG if the continuous time while the following conditions are established is more than the predetermined time.

Judgment Value

Malfunction Criteria	Threshold Value
Front oxygen (A/F) sensor impedance	≤ 50 Ω

Time Needed for Diagnosis: 10000 ms

J: DTC P0031 HO2S HEATER CONTROL CIRCUIT LOW (BANK 1 SENSOR 1)

1. OUTLINE OF DIAGNOSIS

Detect front oxygen (A/F) sensor heater open or short circuit.
The front oxygen (A/F) sensor heater performs duty control, and the output terminal voltage at ON is 0 V, and the output terminal voltage at OFF is the battery voltage.
Judge as NG when the terminal voltage remains Low.

2. COMPONENT DESCRIPTION

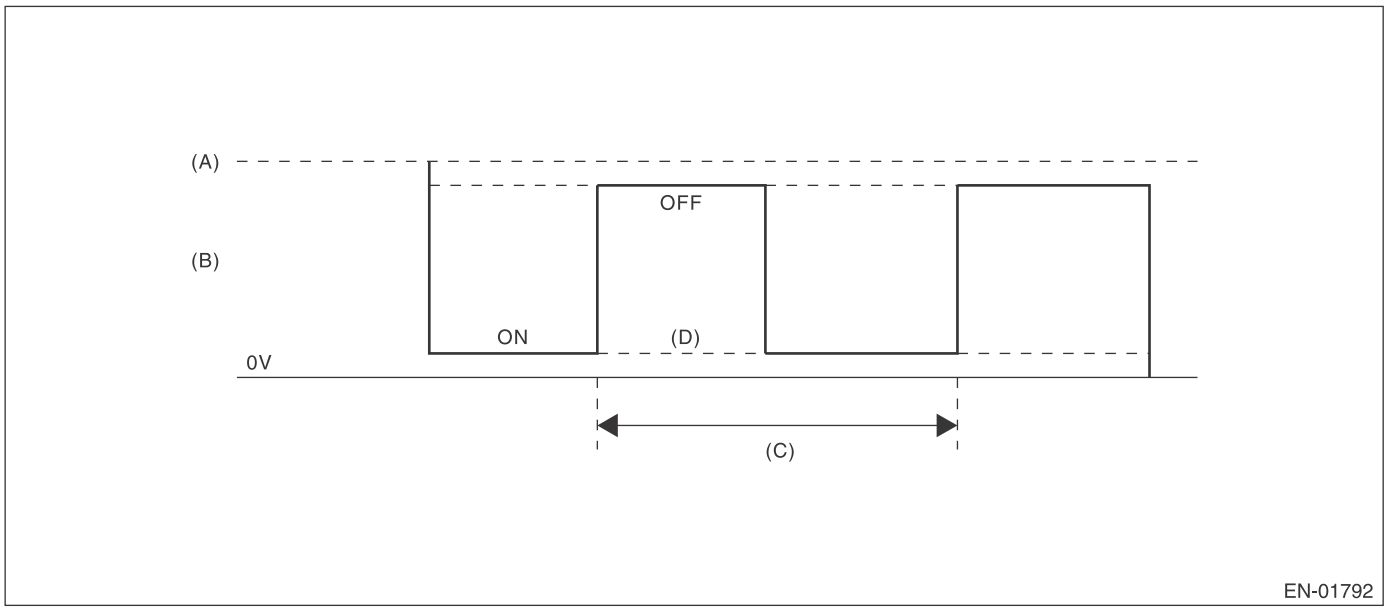

(A) Battery voltage
(B) Front oxygen (A/F) sensor heater output voltage
(C) 128 ms
(D) Low error

3. ENABLE CONDITION

Secondary Parameters	Enable Conditions
Battery voltage	≥ 10.9 V

4. GENERAL DRIVING CYCLE

Always perform the diagnosis continuously.

5. DIAGNOSTIC METHOD

- **Abnormality Judgment**

If the duration of time while the following conditions are met is longer than the time indicated, judge as NG.

Judgment Value

Malfunction Criteria	Threshold Value
Output voltage level Front oxygen (A/F) sensor heater control duty	Low < 87.5 %

Time Needed for Diagnosis: 4 ms × 250 time(s)
Malfunction Indicator Light Illumination: Illuminates as soon as a malfunction occurs.

- **Normality Judgment**

Judge as OK and clear the NG if the continuous time while the following conditions are established is more than the predetermined time.

Judgment Value

Malfunction Criteria	Threshold Value
Output voltage level	High

Time Needed for Diagnosis: Less than 1 second

K: DTC P0032 HO2S HEATER CONTROL CIRCUIT HIGH (BANK 1 SENSOR 1)

1. OUTLINE OF DIAGNOSIS

Detect front oxygen (A/F) sensor heater open or short circuit.
The front oxygen (A/F) sensor heater performs duty control, and the output terminal voltage at ON is 0 V, and the output terminal voltage at OFF is the battery voltage.
Judge as NG when the terminal voltage remains High.

2. COMPONENT DESCRIPTION

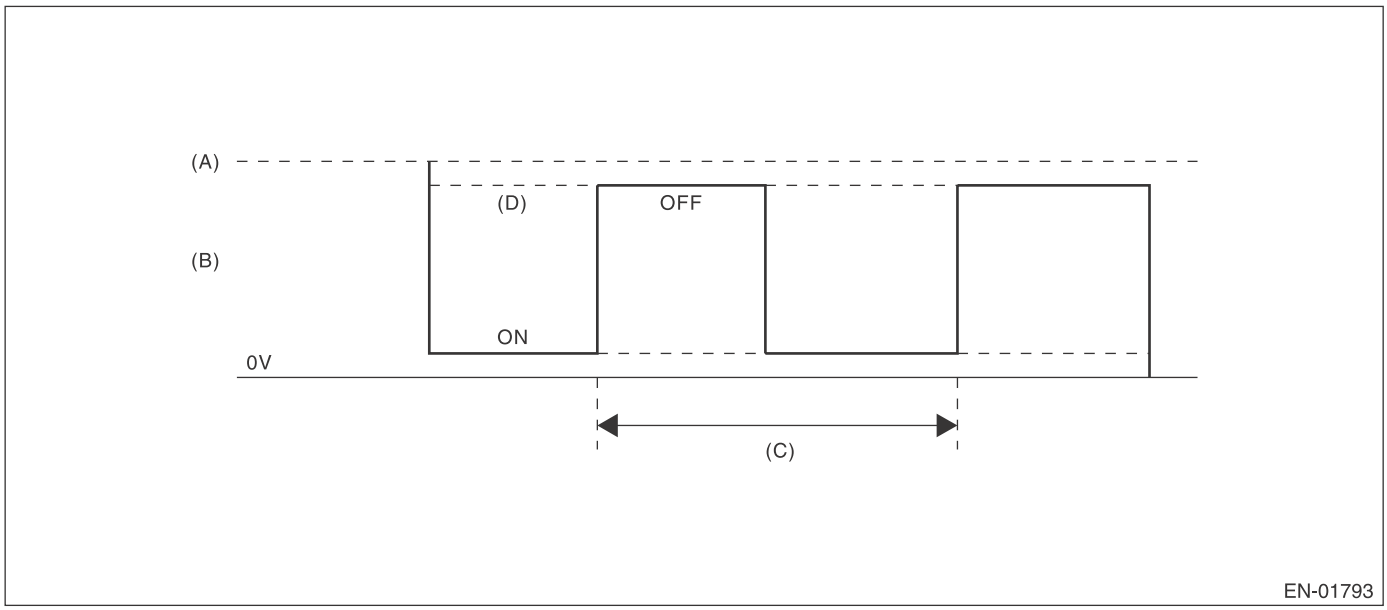

(A) Battery voltage
(B) Front oxygen (A/F) sensor heater output voltage
(C) 128 ms
(D) High error

3. ENABLE CONDITION

Secondary Parameters	Enable Conditions
Battery voltage	≥ 10.9 V

4. GENERAL DRIVING CYCLE

Always perform the diagnosis continuously.

5. DIAGNOSTIC METHOD

- **Abnormality Judgment**

If the duration of time while the following conditions are met is longer than the time indicated, judge as NG.

Judgment Value

Malfunction Criteria	Threshold Value
Output voltage level	High
Front oxygen (A/F) sensor heater control duty	≥ 12.5 %

Time Needed for Diagnosis: 4 ms × 500 time(s)
Malfunction Indicator Light Illumination: Illuminates as soon as a malfunction occurs.

- **Normality Judgment**

Judge as OK and clear the NG if the continuous time while the following conditions are established is more than the predetermined time.

Judgment Value

Malfunction Criteria	Threshold Value
Output voltage level	Low

Time Needed for Diagnosis: Less than 1 second

L: DTC P0037 HO2S HEATER CONTROL CIRCUIT LOW (BANK 1 SENSOR 2)

1. OUTLINE OF DIAGNOSIS

Detect the rear oxygen sensor heater open or short circuit.
The rear oxygen sensor heater performs duty control, and the output terminal voltage at ON is 0 V, and the output terminal voltage at OFF is the battery voltage.
Judge as NG when the terminal voltage remains Low.

2. COMPONENT DESCRIPTION

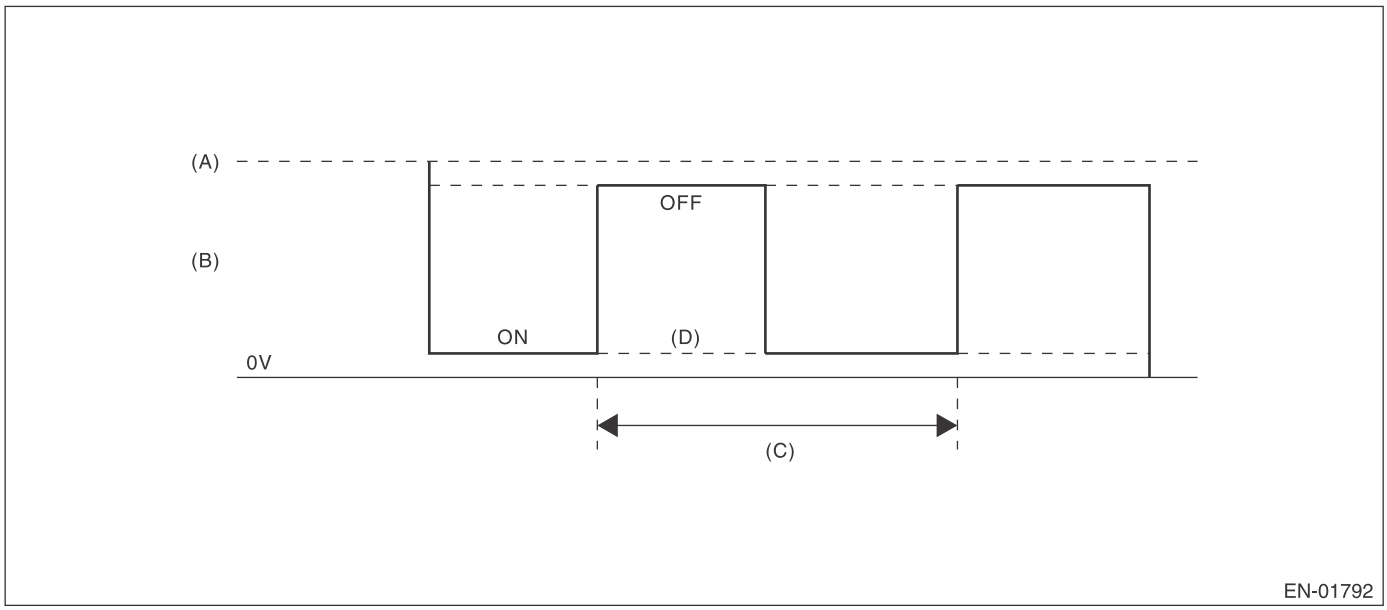

(A) Battery voltage
(B) Output voltage of the rear oxygen sensor heater
(C) 256 ms (cycle)
(D) Low error

3. ENABLE CONDITION

Secondary Parameters	Enable Conditions
Battery voltage	≥ 10.9 V
Elapsed time after starting the engine	≥ 1 second
Engine speed	< 8000 rpm

4. GENERAL DRIVING CYCLE

After starting the engine, perform the diagnosis continuously when engine is low speed.

5. DIAGNOSTIC METHOD

- **Abnormality Judgment**

If the duration of time while the following conditions are met is longer than the time indicated, judge as NG.

Judgment Value

Malfunction Criteria	Threshold Value
Output voltage level	Low
Rear oxygen sensor heater control duty	< 75 %

Time Needed for Diagnosis: 8 ms × 1250 time(s)
Malfunction Indicator Light Illumination: Illuminates when malfunction occurs in 2 continuous driving cycles.

- **Normality Judgment**

Judge as OK and clear the NG if the continuous time while the following conditions are established is more than the predetermined time.

Judgment Value

Malfunction Criteria	Threshold Value
Output voltage level	High

Time Needed for Diagnosis: Less than 1 second

M: DTC P0038 HO2S HEATER CONTROL CIRCUIT HIGH (BANK 1 SENSOR 2)

1. OUTLINE OF DIAGNOSIS

Detect the rear oxygen sensor heater open or short circuit.
The rear oxygen sensor heater performs duty control, and the output terminal voltage at ON is 0 V, and the output terminal voltage at OFF is the battery voltage.
Judge as NG when the terminal voltage remains High.

2. COMPONENT DESCRIPTION

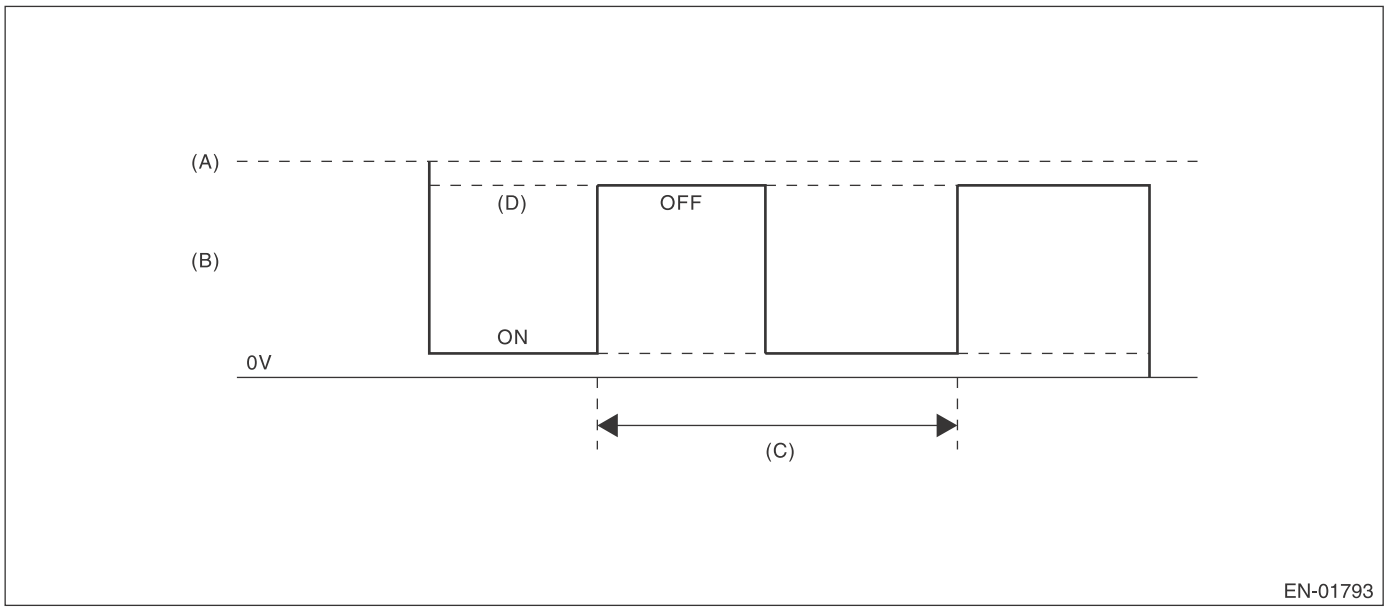

(A) Battery voltage
(B) Output voltage of the rear oxygen sensor heater
(C) 256 ms (cycle)
(D) High error

3. ENABLE CONDITION

Secondary Parameters	Enable Conditions
Battery voltage	≥ 10.9 V
Elapsed time after starting the engine	≥ 1 second
Engine speed	< 8000 rpm

4. GENERAL DRIVING CYCLE

After starting the engine, perform the diagnosis continuously when engine is low speed.

5. DIAGNOSTIC METHOD

- **Abnormality Judgment**

If the duration of time while the following conditions are met is longer than the time indicated, judge as NG.

Judgment Value

Malfunction Criteria	Threshold Value
Output voltage level	High
Rear oxygen sensor heater control duty	≥ 25 %

Time Needed for Diagnosis: 8 ms × 1250 time (s)
Malfunction Indicator Light Illumination: Illuminates when malfunction occurs in 2 continuous driving cycles.

- **Normality Judgment**

Judge as OK and clear the NG if the continuous time while the following conditions are established is more than the predetermined time.

Judgment Value

Malfunction Criteria	Threshold Value
Output voltage level	Low

Time Needed for Diagnosis: Less than 1 second

N: DTC P0068 MAP/MAF - THROTTLE POSITION CORRELATION

1. OUTLINE OF DIAGNOSIS

Detect problems in the intake manifold pressure sensor output properties.
Judge as NG when the intake air pressure AD value is Low whereas it seemed to be High from the viewpoint of engine condition, or when it is High whereas it seemed to be Low from the engine condition.

2. COMPONENT DESCRIPTION

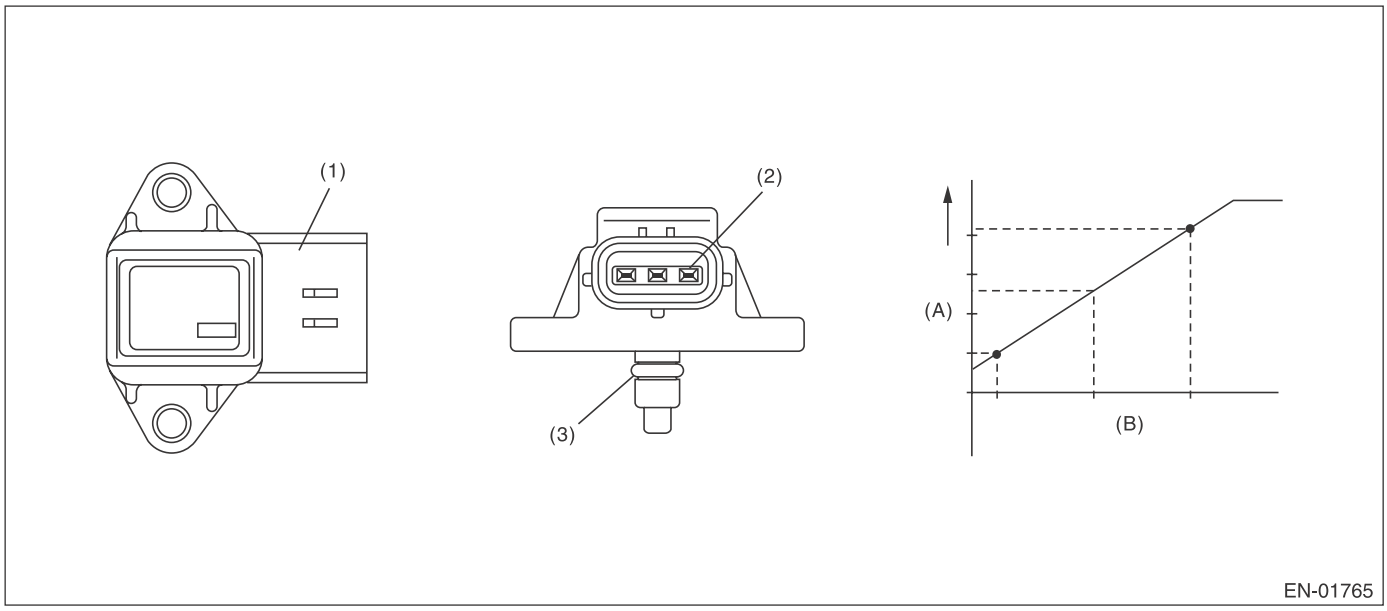

(A) Output voltage
(B) Absolute pressure
(1) Connector
(2) Terminals
(3) O-ring

3. ENABLE CONDITION

Secondary Parameters	Enable Conditions
Engine coolant temperature	≥ 72 °C (161.6 °F)

4. GENERAL DRIVING CYCLE

Perform the diagnosis continuously after idling.

5. DIAGNOSTIC METHOD

• Abnormality Judgment

Judge as NG when Low side or High side becomes NG.
If the duration of time while the following conditions are met is longer than the time indicated, judge as NG.

Judgment Value

Malfunction Criteria	Threshold Value
Low	
Engine speed	< 3000 rpm
Throttle position	≥ 16 °
Output voltage	< 1 V
Engine load	> 0.96 g/rev (0.03 oz/rev)
High	
Engine speed	600 rpm — 900 rpm
Throttle position	< 5.13 °
Output voltage	≥ 2.36 V
Engine load	< 0.48 g/rev (0.02 oz/rev)

Time Needed for Diagnosis:
Low side: 3000 ms
High side: 3000 ms
Malfunction Indicator Light Illumination: Illuminates when malfunction occurs in 2 continuous driving cycles.

• Normality Judgment

Judge as OK and clear the NG when both Low side and High side become OK.
If the duration of time while the following conditions are met is longer than the time indicated, judge as OK.

Judgment Value

Malfunction Criteria	Threshold Value
Low	
Engine speed	< 3000 rpm
Throttle position	≥ 16 °
Output voltage	≥ 1 V
Engine load	> 0.96 g/rev (0.03 oz/rev)
High	
Engine speed	600 rpm — 900 rpm
Throttle position	< 5.13 °
Output voltage	< 2.36 V
Engine load	< 0.48 g/rev (0.02 oz/rev)

Time Needed for Diagnosis:
Low side: Less than 1 s
High side: Less than 1 s

O: DTC P0101 MASS OR VOLUME AIR FLOW CIRCUIT RANGE/PERFORMANCE

1. OUTLINE OF DIAGNOSIS

Detect the malfunction of air flow sensor output properties.
Judge as a low side NG when the air flow voltage indicates a small value regardless of running in a state where the air flow voltage increases. Judge as a high side NG when the air flow voltage indicates a large value regardless of running in a state where the air flow voltage decreases. Judge air flow sensor property NG when the Low side or High side becomes NG.

2. COMPONENT DESCRIPTION

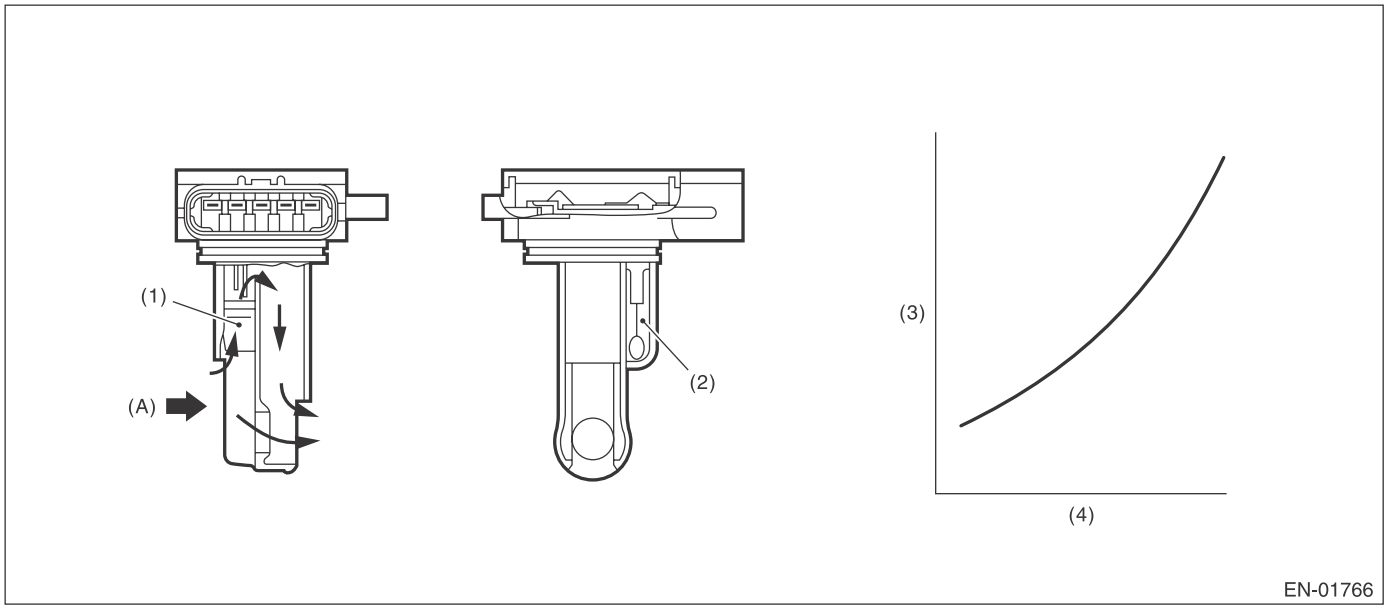

(A) Air

(1) Air flow sensor
(2) Intake air temperature sensor
(3) Voltage (V)
(4) Amount of intake air (kg (lb)/s)

3. ENABLE CONDITION

Secondary Parameters	Enable Conditions
Engine coolant temperature	≥ 72 °C (161.6 °F)

4. GENERAL DRIVING CYCLE

Perform the diagnosis continuously after idling.

5. DIAGNOSTIC METHOD

• Abnormality Judgment

Judge as NG when Low side or High side becomes NG.
If the duration of time while the following conditions are met is longer than the time indicated, judge as NG.

Judgment Value

Malfunction Criteria	Threshold Value
Low	
Output voltage	< 1.5 V
Engine speed	≥ 2300 rpm
Throttle opening angle	≥ 16 °
Intake manifold pressure	≥ 66.7 kPa (500 mmHg, 19.7 inHg)
High (1)	
Output voltage	≥ 1.95 V
Engine speed	600 rpm — 900 rpm
Throttle opening angle	< 5.13 °
Intake manifold pressure	≥ 50 kPa (375 mmHg, 14.8 inHg)
High (2)	
Output voltage	≥ 1.65 V
Engine speed	600 rpm — 900 rpm
Throttle opening angle	< 5.13 °
Intake manifold pressure	≥ 50 kPa (375 mmHg, 14.8 inHg)
Fuel system diagnosis	Rich side malfunction

Time Needed for Diagnosis:
Low: 3000 ms
High: 10000 ms
Malfunction Indicator Light Illumination: Illuminates when malfunction occurs in 2 continuous driving cycles.

• Normality Judgment

Judge as OK and clear the NG when both Low side and High side become OK.
Judge as OK and clear the NG if the continuous time while the following conditions are established is more than the predetermined time.

Judgment Value

Malfunction Criteria	Threshold Value
Low	
Output voltage	≥ 1.5 V
Engine speed	≥ 2300 rpm
Throttle opening angle	≥ 16 °
Intake manifold pressure	≥ 66.7 kPa (500 mmHg, 19.7 inHg)
High	
Output voltage	< 1.95 V
Engine speed	600 rpm — 900 rpm
Throttle opening angle	< 5.13 °
Intake manifold pressure	< 50 kPa (375 mmHg, 14.8 inHg)
Fuel system diagnosis	Rich side normal

Time Needed for Diagnosis:
Low: Less than 1 s
High: Less than 1 s

P: DTC P0102 MASS OR VOLUME AIR FLOW CIRCUIT LOW INPUT

1. OUTLINE OF DIAGNOSIS

Detect open or short circuits of the air flow sensor.
Judge as NG if out of specification.

2. COMPONENT DESCRIPTION

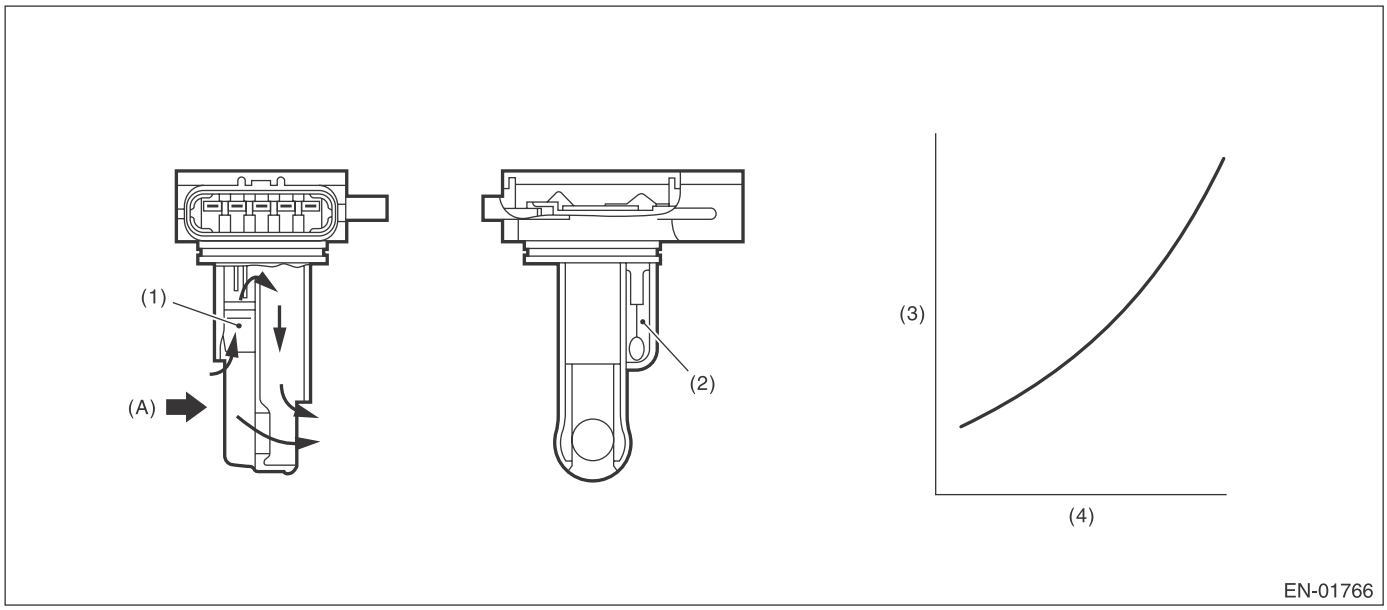

(A) Air

(1) Air flow sensor
(2) Intake air temperature sensor
(3) Voltage (V)
(4) Amount of intake air (kg (lb)/s)

3. ENABLE CONDITION

Secondary Parameters	Enable Conditions
None	

4. GENERAL DRIVING CYCLE

Always perform the diagnosis continuously.

5. DIAGNOSTIC METHOD

• Abnormality Judgment

If the duration of time while the following conditions are met is longer than the time indicated, judge as NG.

Judgment Value

Malfunction Criteria	Threshold Value
Output voltage	≤ 0.22 V

Time Needed for Diagnosis: 500 ms
Malfunction Indicator Light Illumination: Illuminates as soon as a malfunction occurs.

• Normality Judgment

Judge as OK and clear the NG if the continuous time while the following conditions are established is more than the predetermined time.

Judgment Value

Malfunction Criteria	Threshold Value
Output voltage	> 0.22 V

Time Needed for Diagnosis: Less than 1 second

Q: DTC P0103 MASS OR VOLUME AIR FLOW CIRCUIT HIGH INPUT

1. OUTLINE OF DIAGNOSIS

Detect open or short circuits of the air flow sensor.
Judge as NG if out of specification.

2. COMPONENT DESCRIPTION

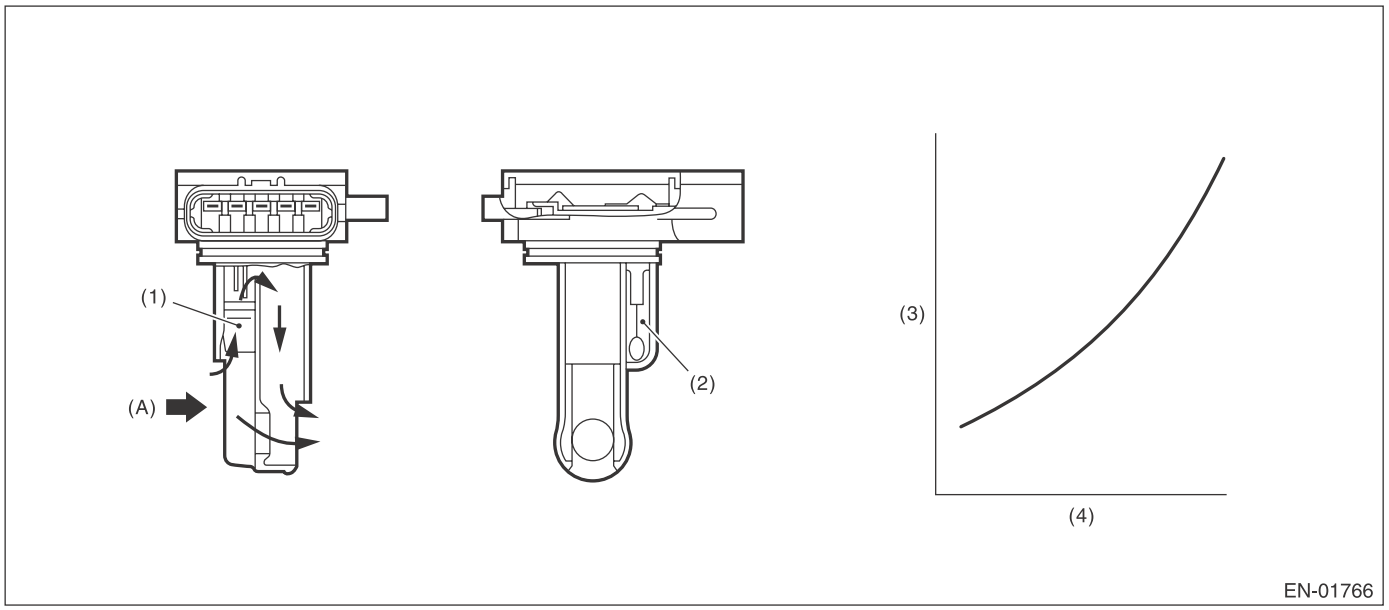

(A) Air

(1) Air flow sensor
(2) Intake air temperature sensor
(3) Voltage (V)
(4) Amount of intake air (kg (lb)/s)

3. ENABLE CONDITION

Secondary Parameters	Enable Conditions
None	

4. GENERAL DRIVING CYCLE

Always perform the diagnosis continuously.

5. DIAGNOSTIC METHOD

• Abnormality Judgment

If the duration of time while the following conditions are met is longer than the time indicated, judge as NG.

Judgment Value

Malfunction Criteria	Threshold Value
Output voltage	≥ 4.98 V

Time Needed for Diagnosis: 500 ms
Malfunction Indicator Light Illumination: Illuminates as soon as a malfunction occurs.

• Normality Judgment

Judge as OK and clear the NG if the continuous time while the following conditions are established is more than the predetermined time.

Judgment Value

Malfunction Criteria	Threshold Value
Output voltage	< 4.98 V

Time Needed for Diagnosis: Less than 1 second

R: DTC P0107 MANIFOLD ABSOLUTE PRESSURE/BAROMETRIC PRESSURE CIRCUIT LOW INPUT

1. OUTLINE OF DIAGNOSIS

Detect the open or short circuit of intake manifold pressure sensor.
Judge as NG if out of specification.

2. COMPONENT DESCRIPTION

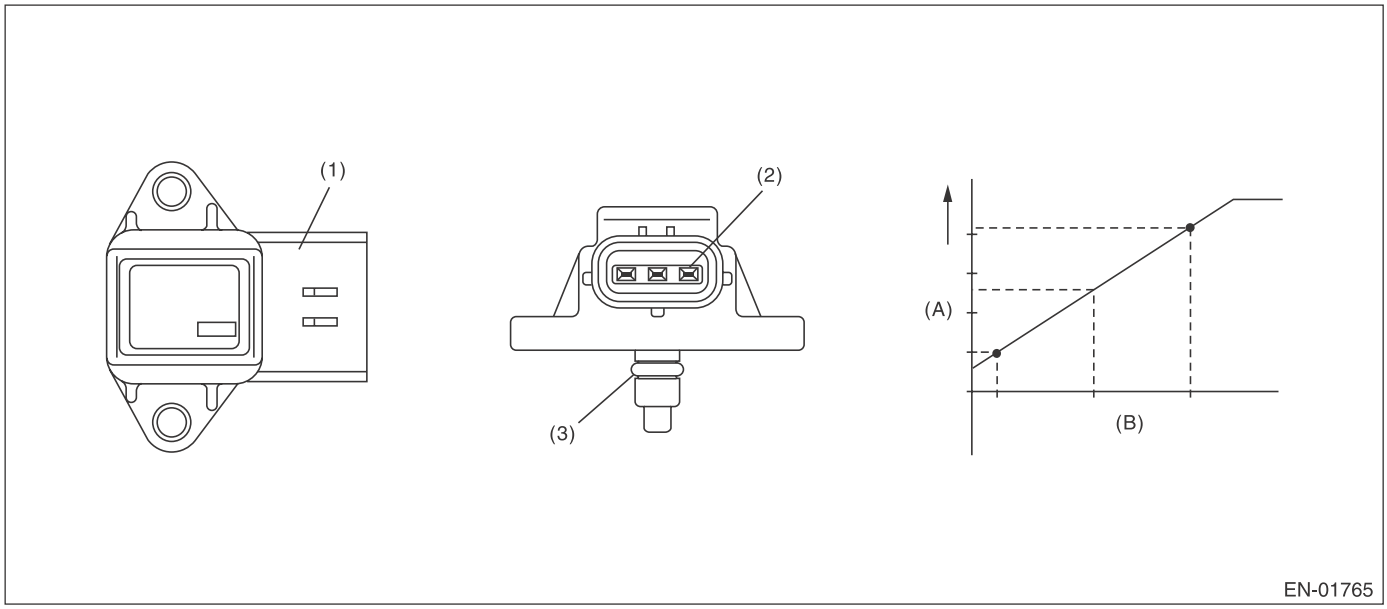

(A) Output voltage
(B) Absolute pressure
(1) Connector
(2) Terminals
(3) O-ring

3. ENABLE CONDITION

Secondary Parameters	Enable Conditions
None	

4. GENERAL DRIVING CYCLE

Always perform the diagnosis continuously.

5. DIAGNOSTIC METHOD

• Abnormality Judgment

If the duration of time while the following conditions are met is longer than the time indicated, judge as NG.

Judgment Value

Malfunction Criteria	Threshold Value
Output voltage	≤ 0.573 V

Time Needed for Diagnosis: 500 ms
Malfunction Indicator Light Illumination: Illuminates as soon as a malfunction occurs.

• Normality Judgment

Judge as OK and clear the NG if the continuous time while the following conditions are established is more than the predetermined time.

Judgment Value

Malfunction Criteria	Threshold Value
Output voltage	> 0.573 V

Time Needed for Diagnosis: Less than 1 second

S: DTC P0108 MANIFOLD ABSOLUTE PRESSURE/BAROMETRIC PRESSURE CIRCUIT HIGH INPUT

1. OUTLINE OF DIAGNOSIS

Detect the open or short circuit of intake manifold pressure sensor.
Judge as NG if out of specification.

2. COMPONENT DESCRIPTION

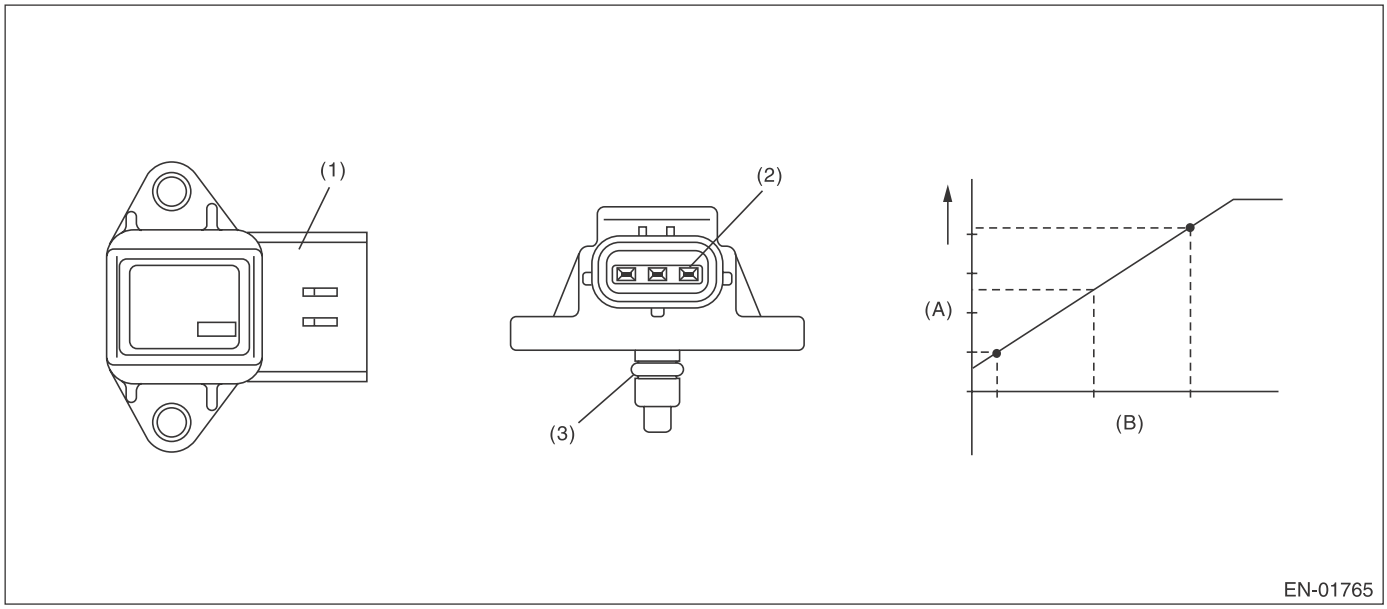

(A) Output voltage
(B) Absolute pressure
(1) Connector
(2) Terminals
(3) O-ring

3. ENABLE CONDITION

Secondary Parameters	Enable Conditions
None	

4. GENERAL DRIVING CYCLE

Always perform the diagnosis continuously.

5. DIAGNOSTIC METHOD

• Abnormality Judgment

If the duration of time while the following conditions are met is longer than the time indicated, judge as NG.

Judgment Value

Malfunction Criteria	Threshold Value
Output voltage	≥ 4.596 V

Time Needed for Diagnosis: 500 ms
Malfunction Indicator Light Illumination: Illuminates as soon as a malfunction occurs.

• Normality Judgment

Judge as OK and clear the NG if the continuous time while the following conditions are established is more than the predetermined time.

Judgment Value

Malfunction Criteria	Threshold Value
Output voltage	< 4.596 V

Time Needed for Diagnosis: Less than 1 second

T: DTC P0111 INTAKE AIR TEMPERATURE SENSOR 1 CIRCUIT RANGE/PERFORMANCE

1. OUTLINE OF DIAGNOSIS

Detect the malfunction of intake air temperature sensor output property.
Judge as NG when the intake air temperature is not varied whereas it seemed to be varied from the viewpoint of engine condition.

2. COMPONENT DESCRIPTION

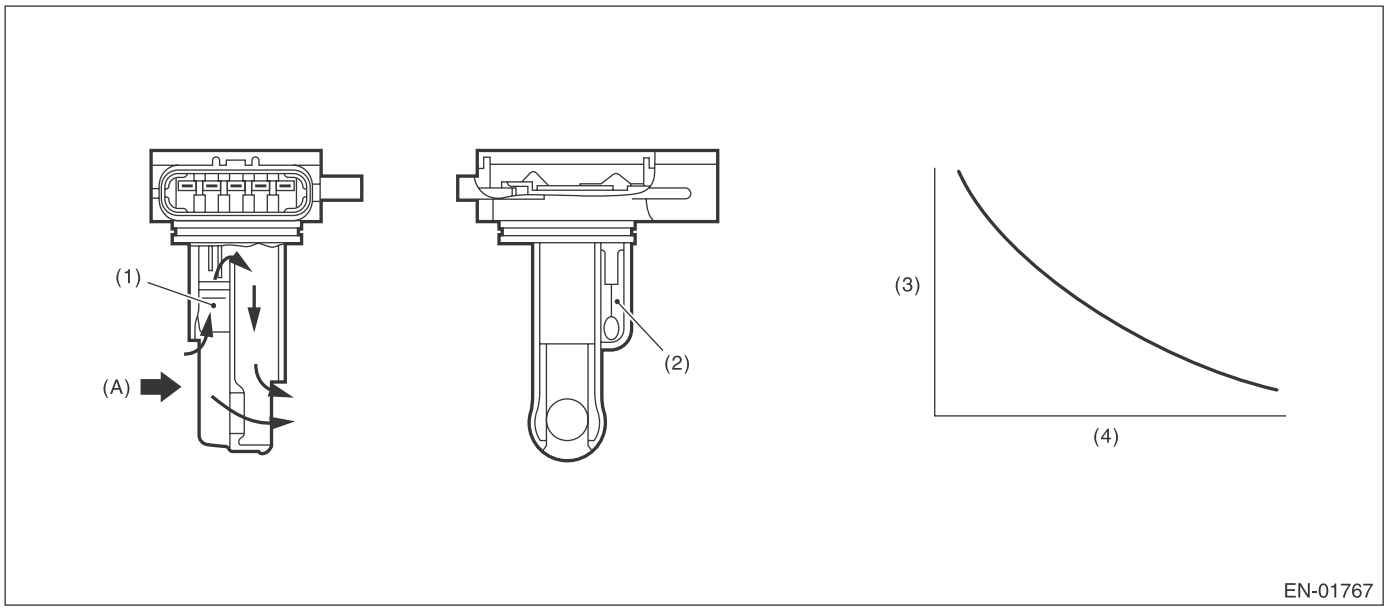

(A) Air

(1) Air flow sensor
(2) Intake air temperature sensor
(3) Resistance value (Ω)
(4) Intake air temperature °C (°F)

3. ENABLE CONDITION

Secondary Parameters	Enable Conditions
Engine coolant temperature at engine starting	< 35 °C (95 °F)
Battery voltage	≥ 10.9 V
Continuous time when the vehicle speed is less than 140 km/h (87 MPH)	≥ 610 s
Engine coolant temperature	≥ 72 °C (161.6 °F)
Intake air amount sum value	≥ Value of Map 1
Number of experiences under conditions below	≥ 3 time(s)
• Continuous time when vehicle speed is less than 4 km/h (2.5 MPH)	≥ Value from Map 2
• Continuous time when vehicle speed is 40 km/h (24.9 MPH) or more	≥ 15 s
and	
Establishing time of 1, 2	≥ 15 s
1. Intake air amount	≥ 15 g/s (0.53 oz/s)
2. Vehicle speed	≥ 4 km/h (2.5 MPH)

Map 1

Engine coolant temperature °C (°F)	–20 (–4)	–10 (14)	0 (32)	10 (50)	20 (68)
Intake air amount sum value (g (oz)/s)	76000 (2680.52)	8880 (313.2)	8153 (287.56)	7427 (261.95)	6009 (211.94)

Map 2

Engine coolant temperature °C (°F)	–20 (–4)	–10 (14)	5 (41)	20 (68)
Continuous time (s) when vehicle speed is less than 4 km/h (2.5 MPH)	250	40	32	24

4. GENERAL DRIVING CYCLE

Perform the diagnosis when the vehicle speed condition is met after warming up from a cold condition.

5. DIAGNOSTIC METHOD

• Abnormality Judgment

Judge as NG when the following conditions are established.

Judgment Value

Malfunction Criteria	Threshold Value
Output voltage difference between Max. and Min.	< 0.02 V(Equivalent to approximately 0.5°C (0.9°F) near 25°C)

Time Needed for Diagnosis: Less than 1 second
Malfunction Indicator Light Illumination: Illuminates when malfunction occurs in 2 continuous driving cycles.

• Normality Judgment

Judge as OK and clear the NG if the following conditions are established.

Judgment Value

Malfunction Criteria	Threshold Value
Output voltage difference between Max. and Min.	≥ 0.02 V

Time Needed for Diagnosis: Less than 1 second

U: DTC P0112 INTAKE AIR TEMPERATURE SENSOR 1 CIRCUIT LOW

1. OUTLINE OF DIAGNOSIS

Detect open or short circuit of the intake air temperature sensor.
Judge as NG if out of specification.

2. COMPONENT DESCRIPTION

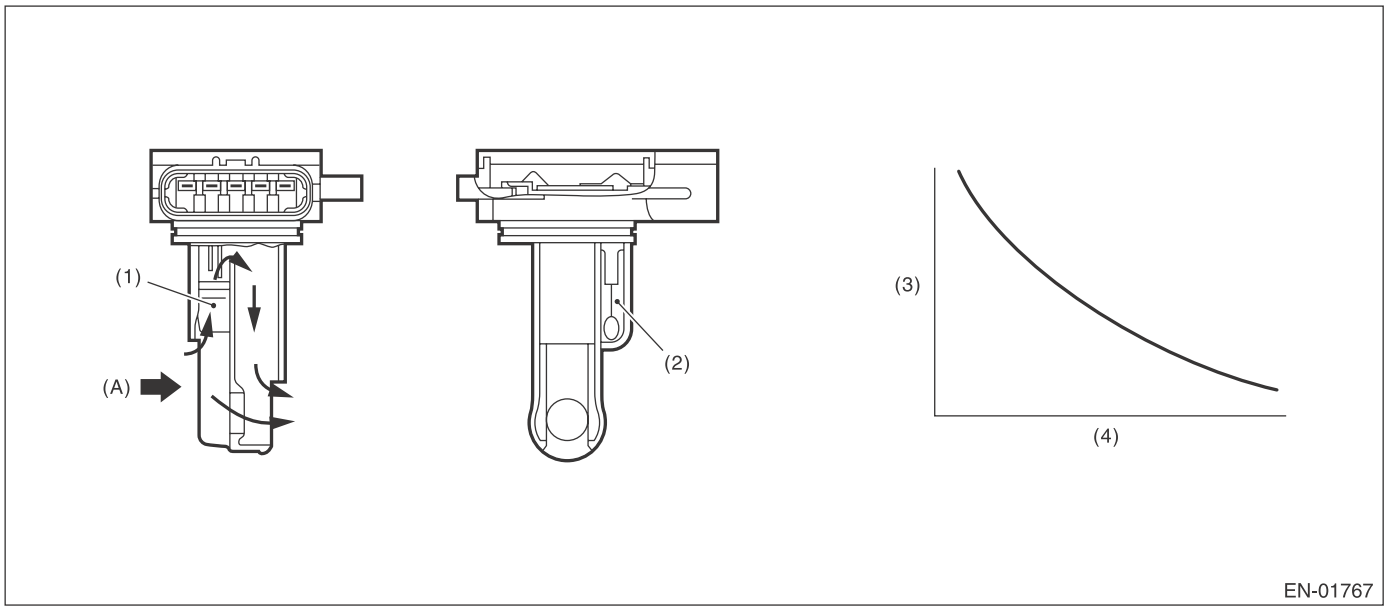

(A) Air

(1) Air flow sensor
(2) Intake air temperature sensor
(3) Resistance value (Ω)
(4) Intake air temperature °C (°F)

3. ENABLE CONDITION

Secondary Parameters	Enable Conditions
None	

4. GENERAL DRIVING CYCLE

Always perform the diagnosis continuously.

5. DIAGNOSTIC METHOD

• Abnormality Judgment

If the duration of time while the following conditions are met is longer than the time indicated, judge as NG.

Judgment Value

Malfunction Criteria	Threshold Value
Output voltage	< 0.231 V

Time Needed for Diagnosis: 500 ms
Malfunction Indicator Light Illumination: Illuminates as soon as a malfunction occurs.

• Normality Judgment

Judge as OK and clear the NG if the continuous time while the following conditions are established is more than the predetermined time.

Judgment Value

Malfunction Criteria	Threshold Value
Output voltage	≥ 0.231 V

Time Needed for Diagnosis: Less than 1 second

V: DTC P0113 INTAKE AIR TEMPERATURE SENSOR 1 CIRCUIT HIGH

1. OUTLINE OF DIAGNOSIS

Detect open or short circuit of the intake air temperature sensor.
Judge as NG if out of specification.

2. COMPONENT DESCRIPTION

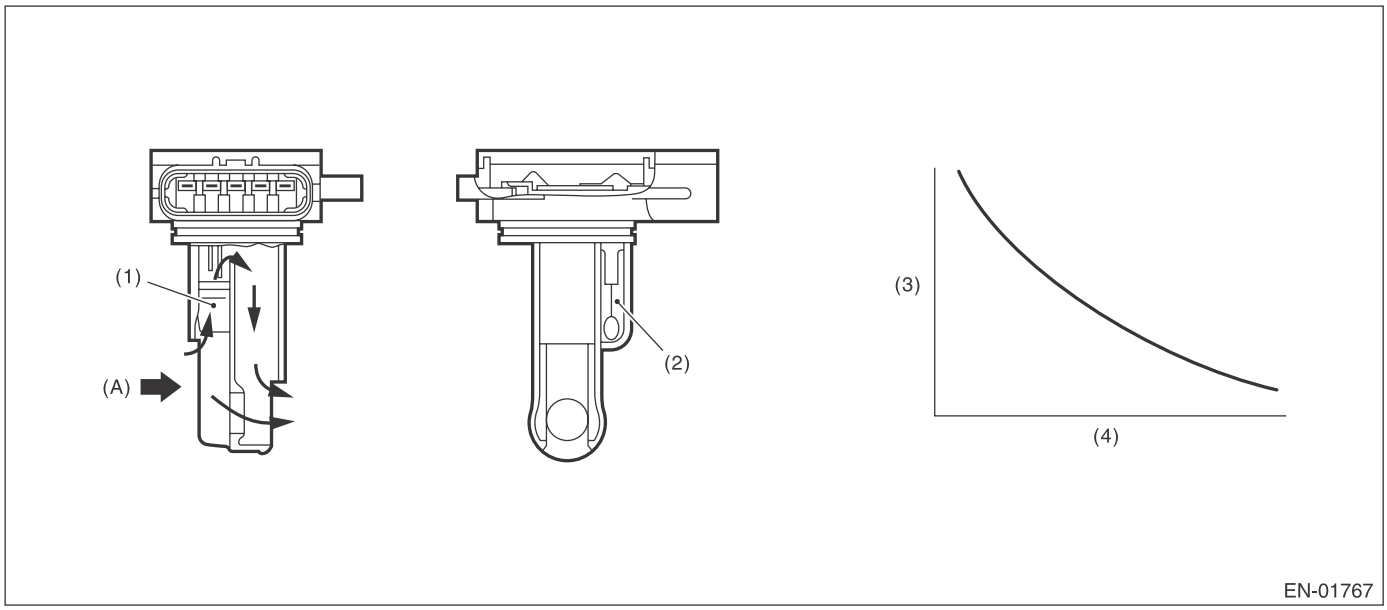

(A) Air

(1) Air flow sensor
(2) Intake air temperature sensor
(3) Resistance value (Ω)
(4) Intake air temperature °C (°F)

3. ENABLE CONDITION

Secondary Parameters	Enable Conditions
None	

4. GENERAL DRIVING CYCLE

Always perform the diagnosis continuously.

5. DIAGNOSTIC METHOD

• Abnormality Judgment

If the duration of time while the following conditions are met is longer than the time indicated, judge as NG.

Judgment Value

Malfunction Criteria	Threshold Value
Output voltage	≥ 4.716 V

Time Needed for Diagnosis: 500 ms
Malfunction Indicator Light Illumination: Illuminates as soon as a malfunction occurs.

• Normality Judgment

Judge as OK and clear the NG if the continuous time while the following conditions are established is more than the predetermined time.

Judgment Value

Malfunction Criteria	Threshold Value
Output voltage	< 4.716 V

Time Needed for Diagnosis: Less than 1 second

W: DTC P0117 ENGINE COOLANT TEMPERATURE CIRCUIT LOW

1. OUTLINE OF DIAGNOSIS

Detect the open or short circuit of the engine coolant temperature sensor.
Judge as NG if out of specification.

2. COMPONENT DESCRIPTION

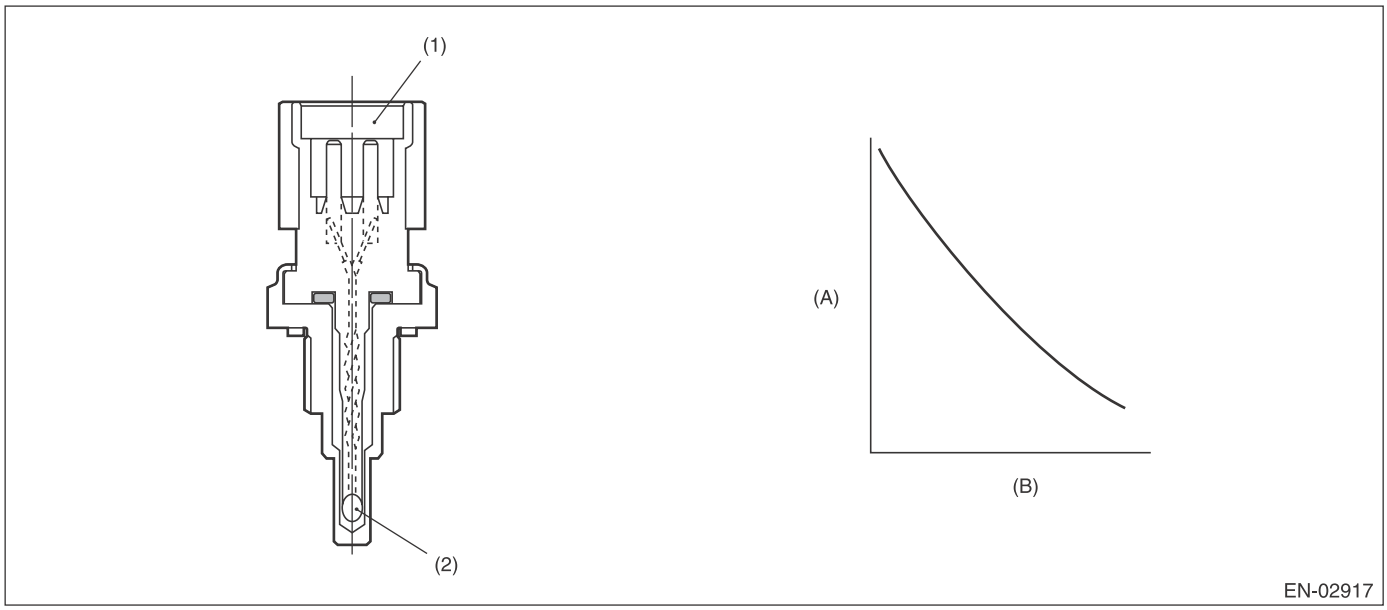

(A) Resistance value (kΩ)
(B) Temperature °C (°F)
(1) Connector
(2) Thermistor element

3. ENABLE CONDITION

Secondary Parameters	Enable Conditions
None	

4. GENERAL DRIVING CYCLE

Always perform the diagnosis continuously.

5. DIAGNOSTIC METHOD

- **Abnormality Judgment**

If the duration of time while the following conditions are met is longer than the time indicated, judge as NG.

Judgment Value

Malfunction Criteria	Threshold Value
Output voltage	< 0.275 V

Time Needed for Diagnosis: 500 ms
Malfunction Indicator Light Illumination: Illuminates as soon as a malfunction occurs.

- **Normality Judgment**

Judge as OK and clear the NG if the continuous time while the following conditions are established is more than the predetermined time.

Judgment Value

Malfunction Criteria	Threshold Value
Output voltage	≥ 0.275 V

Time Needed for Diagnosis: Less than 1 second

X: DTC P0118 ENGINE COOLANT TEMPERATURE CIRCUIT HIGH

1. OUTLINE OF DIAGNOSIS

Detect the open or short circuit of the engine coolant temperature sensor.
Judge as NG if out of specification.

2. COMPONENT DESCRIPTION

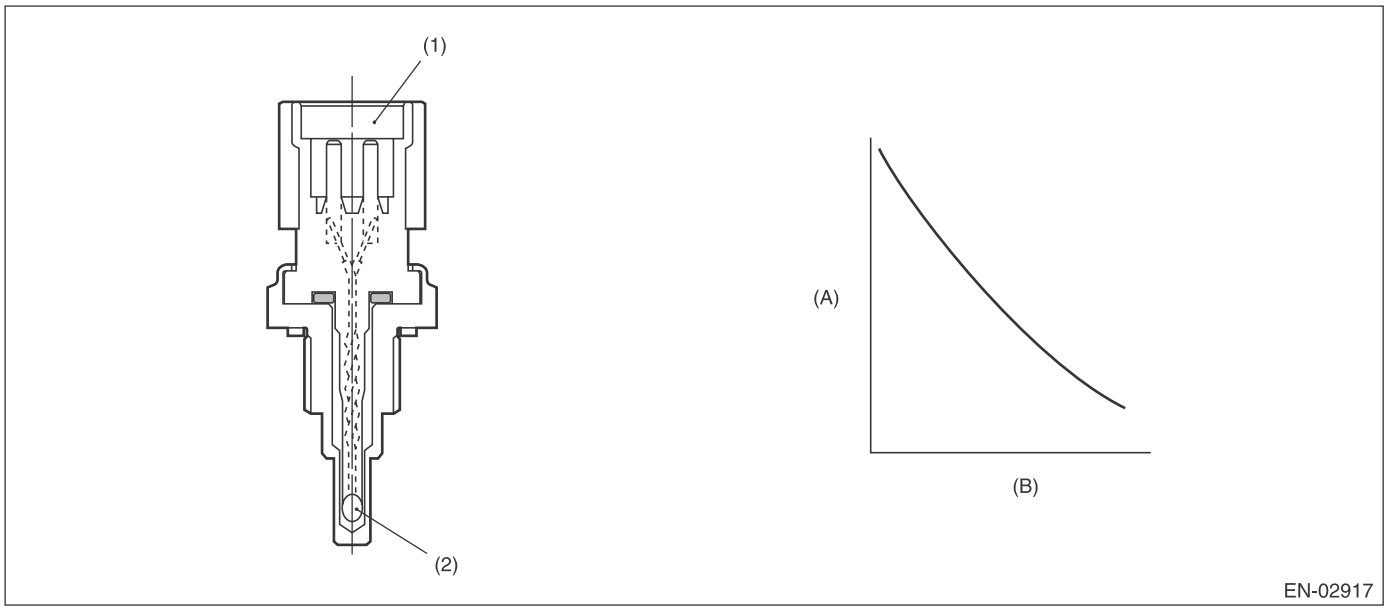

(A) Resistance value (kΩ)
(B) Temperature °C (°F)
(1) Connector
(2) Thermistor element

3. ENABLE CONDITION

Secondary Parameters	Enable Conditions
None	

4. GENERAL DRIVING CYCLE

Always perform the diagnosis continuously.

5. DIAGNOSTIC METHOD

• Abnormality Judgment

If the duration of time while the following conditions are met is longer than the time indicated, judge as NG.

Judgment Value

Malfunction Criteria	Threshold Value
Output voltage	≥ 4.716 V

Time Needed for Diagnosis: 500 ms
Malfunction Indicator Light Illumination: Illuminates as soon as a malfunction occurs.

• Normality Judgment

Judge as OK and clear the NG if the continuous time while the following conditions are established is more than the predetermined time.

Judgment Value

Malfunction Criteria	Threshold Value
Output voltage	< 4.716 V

Time Needed for Diagnosis: Less than 1 second

Y: DTC P0122 THROTTLE/PEDAL POSITION SENSOR/SWITCH "A" CIRCUIT LOW

1. OUTLINE OF DIAGNOSIS

Detect the open or short circuit of throttle position sensor 1.
Judge as NG if out of specification.

2. COMPONENT DESCRIPTION

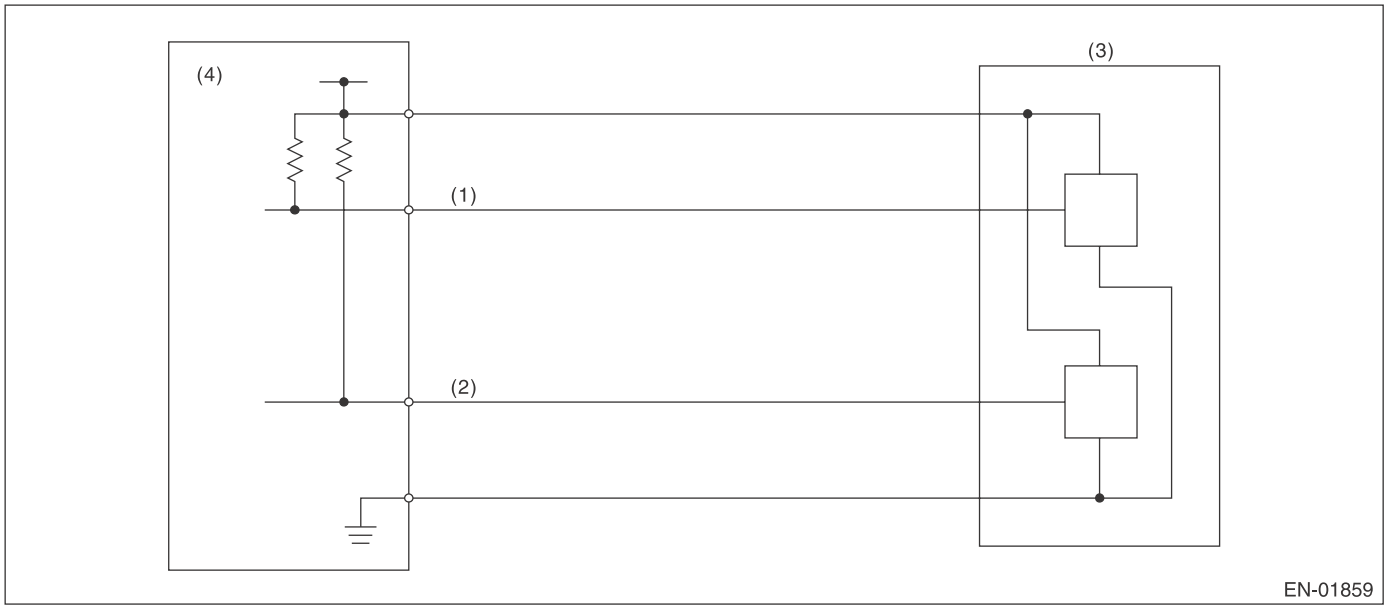

(1) Throttle position sensor 1 signal
(2) Throttle position sensor 2 signal
(3) Throttle position sensor
(4) Engine control module (ECM)

3. ENABLE CONDITION

Secondary Parameters	Enable Conditions
Ignition switch	ON
Battery voltage	≥ 6 V

4. GENERAL DRIVING CYCLE

Always perform the diagnosis continuously.

5. DIAGNOSTIC METHOD

• Abnormality Judgment

If the duration of time while the following conditions are met is longer than the time indicated, judge as NG.

Judgment Value

Malfunction Criteria	Threshold Value
Sensor 1 input voltage	≤ 0.217 V

Time Needed for Diagnosis: 24 ms
Malfunction Indicator Light Illumination: Illuminates as soon as a malfunction occurs.

• Normality Judgment

Judge as OK and clear the NG if the continuous time while the following conditions are established is more than the predetermined time.

Judgment Value

Malfunction Criteria	Threshold Value
Sensor 1 input voltage	> 0.217 V

Time Needed for Diagnosis: 24 ms

Z: DTC P0123 THROTTLE/PEDAL POSITION SENSOR/SWITCH "A" CIRCUIT HIGH

1. OUTLINE OF DIAGNOSIS

Detect the open or short circuit of throttle position sensor 1.
Judge as NG if out of specification.

2. COMPONENT DESCRIPTION

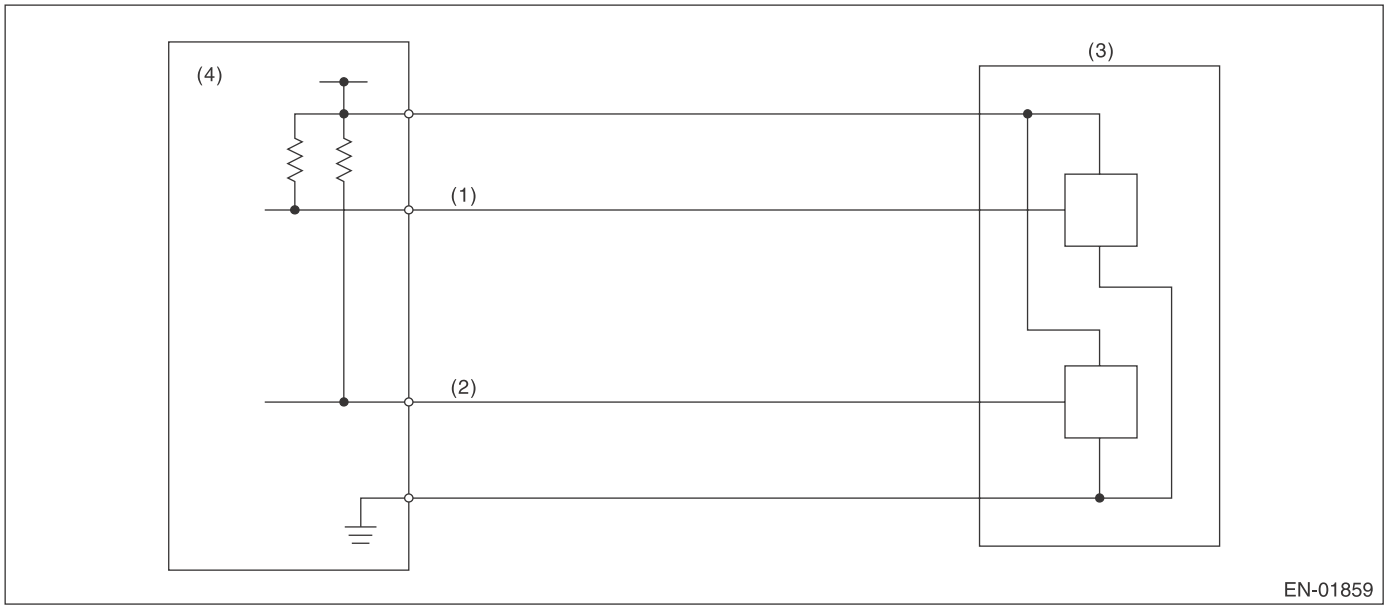

(1) Throttle position sensor 1 signal
(2) Throttle position sensor 2 signal
(3) Throttle position sensor
(4) Engine control module (ECM)

3. ENABLE CONDITION

Secondary Parameters	Enable Conditions
Ignition switch	ON
Battery voltage	≥ 6 V

4. GENERAL DRIVING CYCLE

Always perform the diagnosis continuously.

5. DIAGNOSTIC METHOD

• Abnormality Judgment

If the duration of time while the following conditions are met is longer than the time indicated, judge as NG.

Judgment Value

Malfunction Criteria	Threshold Value
Sensor 1 input voltage	≥ 4.858 V

Time Needed for Diagnosis: 24 ms
Malfunction Indicator Light Illumination: Illuminates as soon as a malfunction occurs.

• Normality Judgment

Judge as OK and clear the NG if the continuous time while the following conditions are established is more than the predetermined time.

Judgment Value

Malfunction Criteria	Threshold Value
Sensor 1 input voltage	< 4.858 V

Time Needed for Diagnosis: 24 ms

AA:DTC P0125 INSUFFICIENT COOLANT TEMPERATURE FOR CLOSED LOOP FUEL CONTROL

1. OUTLINE OF DIAGNOSIS

Detect the malfunction of engine coolant temperature output property.
Judge as NG when the engine coolant temperature does not rise in driving conditions where it should.

2. COMPONENT DESCRIPTION

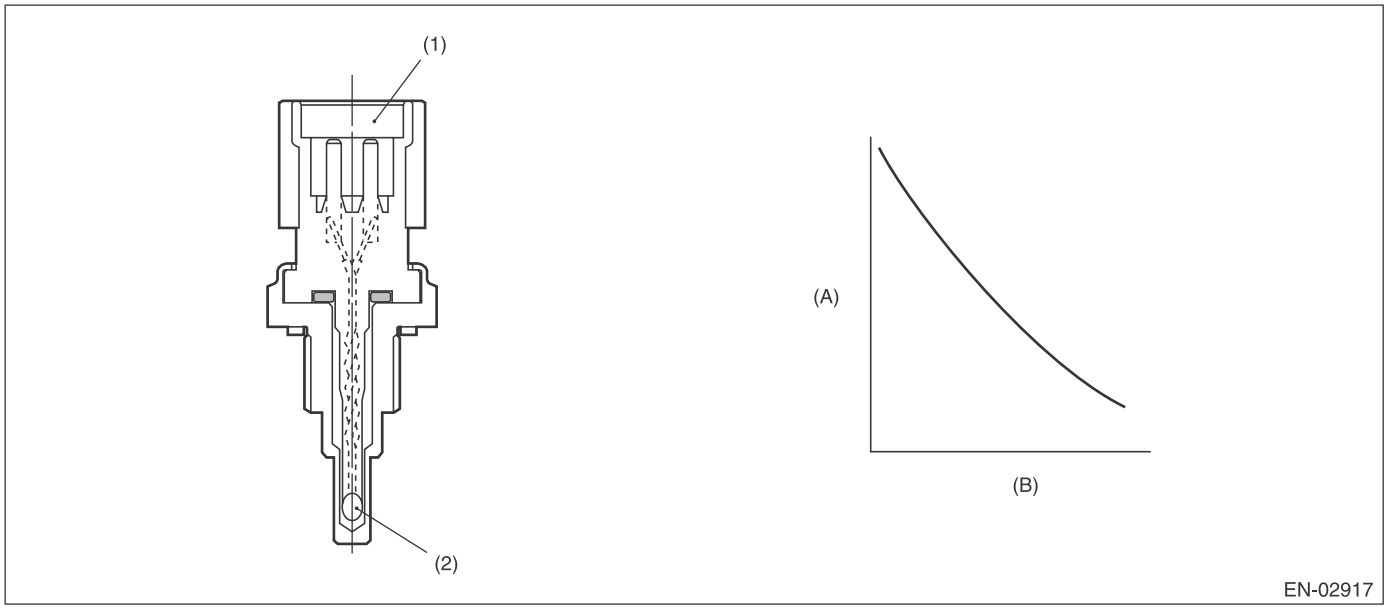

(A) Resistance value (kΩ)
(B) Temperature °C (°F)
(1) Connector
(2) Thermistor element

3. ENABLE CONDITION

Secondary Parameters	Enable Conditions
Engine speed	≥ Value from Map
Battery voltage	≥ 10.9 V

Map

Engine coolant temperature °C (°F)	–40 (–40)	–30 (–22)	–20 (–4)	–10 (14)	0 (32)	10 (50)	20 (68)	30 (86)
Engine speed rpm	500	500	500	500	500	500	500	500

Engine coolant temperature °C (°F)	40 (104)	50 (122)	60 (140)	70 (158)	80 (176)	90 (194)	100 (212)	110 (230)
Engine speed rpm	500	500	500	500	500	500	500	500

4. GENERAL DRIVING CYCLE

Perform the diagnosis only once after engine start.

5. DIAGNOSTIC METHOD

• Abnormality Judgment

Judge as NG if the criteria below are met.

Judgment Value

Malfunction Criteria	Threshold Value
Engine coolant temperature	< 20 °C (68 °F)
Timer for diagnosis after engine start	≥ Judgment value of timer after engine start

Timer for diagnosis after engine start
a. Timer stop at fuel cut
b. During the driving conditions except a) above, timer counts up as follows.
64 ms + TWCNT ms (at 64 ms)
TWCNT is defined as follows,
TWCNT = 0 at idle switch ON,
TWCNT show on the following table at idle switch OFF.

		Vehicle speed km/h (MPH)							
		0 (0)	8 (5)	16 (9.9)	24 (14.9)	32 (19.9)	40 (24.9)	48 (29.8)	56 (34.8)
Temperature °C (°F)	–20 (–4)	0 ms	37.136 ms	74.272 ms	111.41 ms	126.66 ms	141.91 ms	163.59 ms	185.26 ms
	–10 (14)	0 ms	27.391 ms	54.782 ms	82.173 ms	99.65 ms	117.13 ms	135.96 ms	154.8 ms
	0 (32)	0 ms	17.646 ms	35.292 ms	52.938 ms	72.64 ms	92.341 ms	108.34 ms	124.33 ms
	10 (50)	0 ms	7.9012 ms	15.802 ms	23.704 ms	45.63 ms	67.556 ms	80.711 ms	93.867 ms
	20 (68)	0 ms	7.9012 ms	15.802 ms	23.704 ms	45.63 ms	67.556 ms	80.711 ms	93.867 ms

Judgment value of timer after engine starting
t = 451056 ms – 25870 ms × Ti
Ti : The lowest coolant temperature after engine start
Time Needed for Diagnosis: Less than 1 second
Malfunction Indicator Light Illumination: Illuminates when malfunction occurs in 2 continuous driving cycles.

• Normality Judgment

Judge as OK and clear the NG when the malfunction criteria below are met.

Judgment Value

Malfunction Criteria	Threshold Value
Engine coolant temperature	≥ 20 °C (68 °F)

Time Needed for Diagnosis: Less than 1 second

AB:DTC P0126 INSUFFICIENT ENGINE COOLANT TEMPERATURE FOR STABLE OPERATION

1. OUTLINE OF DIAGNOSIS

Detect the malfunction of the engine coolant temperature sensor characteristics.
Memorize the engine coolant temperature and fuel temperature at the last engine stop, and use them to judge as NG when the engine coolant temperature does not decrease when it should.

2. COMPONENT DESCRIPTION

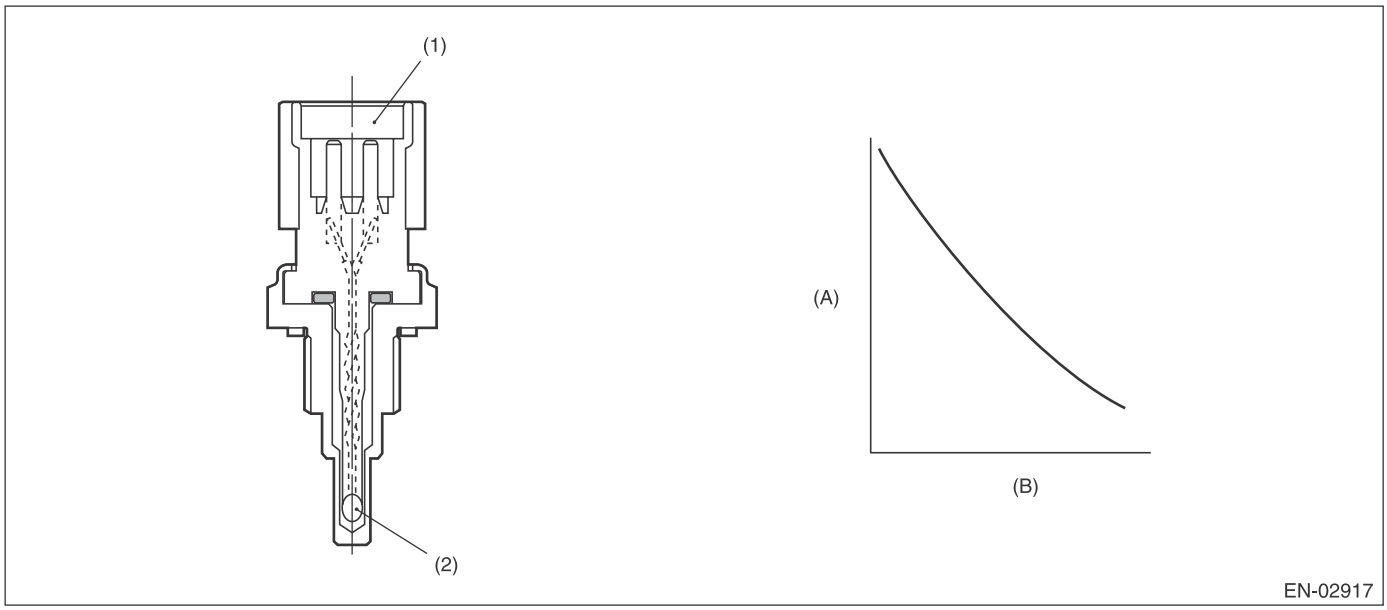

(A) Resistance value (kΩ)
(B) Temperature °C (°F)
(1) Connector
(2) Thermistor element

3. ENABLE CONDITION

Secondary Parameters	Enable Conditions
Battery voltage	≥ 10.9 V
Refueling from the last engine stop till the current engine start	None
Fuel level	≥ 15 ℓ (3.96 US gal, 3.3 Imp gal)
Engine coolant temperature at the last engine stop	≥ 72 °C (161.6 °F)

4. GENERAL DRIVING CYCLE

Perform the diagnosis only once after starting the engine.

5. DIAGNOSTIC METHOD

• Abnormality Judgment

If the duration of time while the following conditions are met is longer than the time indicated, judge as NG.

Judgment Value

Malfunction Criteria	Threshold Value
Engine coolant temperature at the last engine stop — Minimum engine coolant temperature after the engine start	< 2.5 °C (36.5 °F)
Fuel temperature at the last engine stop — fuel temperature	≥ 5 °C (41 °F)
Intake air temperature — fuel temperature	< 2.5 °C (36.5 °F)
Fuel temperature	< 35 °C (95 °F)

Time Needed for Diagnosis: 2500 ms
Malfunction Indicator Light Illumination: Illuminates when malfunction occurs in 2 continuous driving cycles.

• Normality Judgment

Judge as OK and clear the NG if the continuous time while the following conditions are established is more than the predetermined time.

Judgment Value

Malfunction Criteria	Threshold Value
Engine coolant temperature at the last engine stop — Minimum engine coolant temperature after the engine start	≥ 2.5 °C (36.5 °F)

Time Needed for Diagnosis: Less than 1 second

AC:DTC P0128 COOLANT THERMOSTAT (ENGINE COOLANT TEMPERATURE BELOW THERMOSTAT REGULATING TEMPERATURE)

1. OUTLINE OF DIAGNOSIS

Detect malfunctions of the thermostat function.
Judge as NG when the engine coolant temperature is lower than the estimated engine coolant temperature and the difference between them is large. Judge as OK when the engine coolant temperature becomes to 75°C (167°F), and the difference is small, before judging NG.

2. COMPONENT DESCRIPTION

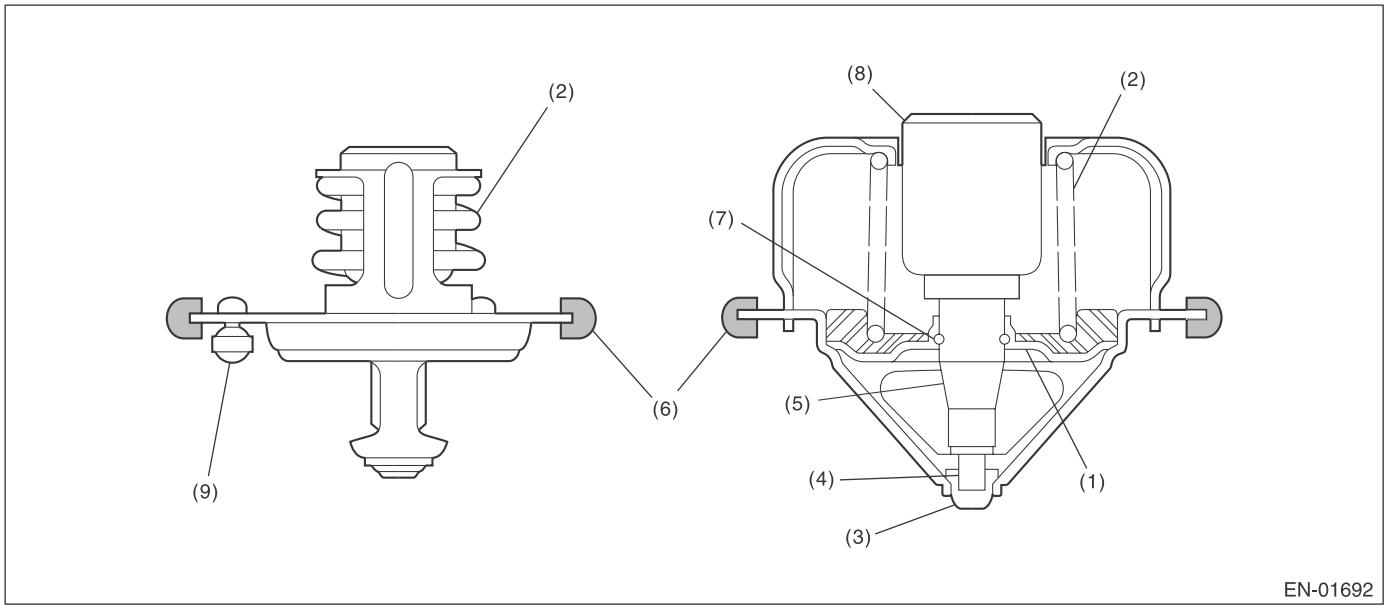

(1) Valve
(2) Spring
(3) Stopper
(4) Piston
(5) Guide
(6) Rubber seal
(7) Stop ring
(8) Wax element
(9) Jiggle valve

3. ENABLE CONDITION

Secondary Parameters	Enable Conditions
None	

4. GENERAL DRIVING CYCLE

Always perform the diagnosis continuously.

5. DIAGNOSTIC METHOD

• Abnormality Judgment

If the duration of time while the following conditions are met is longer than the time indicated, judge as NG.

Judgment Value

Malfunction Criteria	Threshold Value
Battery voltage	≥ 10.9 V
Estimate ambient temperature	≥ –7 °C (19.4 °F)
Thermostat malfunction diagnosis	Incomplete
Engine coolant temperature at engine starting	< 55 °C (131 °F)
Estimated coolant temperature	≥ 73 °C (163.4 °F)
Engine coolant temperature	≤ 73 °C (163.4 °F)
(Estimated – Measured) Engine coolant temperature	> 25 °C (77 °F)
Vehicle speed	≥ 30 km/h (18.6 MPH)

Time Needed for Diagnosis:64 ms × 3 time(s) × 152 time(s)
Malfunction Indicator Light Illumination: Illuminates when malfunction occurs in 2 continuous driving cycles.

• Normality Judgment

Judge as OK and clear the NG if the continuous time while the following conditions are established is more than the predetermined time.

Judgment Value

Malfunction Criteria	Threshold Value
Battery voltage	≥ 10.9 V
Estimate ambient temperature	≥ –7 °C (19.4 °F)
Thermostat malfunction diagnosis	Incomplete
Engine coolant temperature at engine starting	< 55 °C (131 °F)
Engine coolant temperature	≥ 73 °C (163.4 °F)
(Estimated – Measured) Engine coolant temperature	≤ 25 °C (77 °F)

Time Needed for Diagnosis: Less than 1 second

AD:DTC P0131 O2 SENSOR CIRCUIT LOW VOLTAGE (BANK 1 SENSOR 1)

1. OUTLINE OF DIAGNOSIS

Detect the open or short circuit of sensor.
Judge as NG, when the element voltage is out of the specified range.

2. COMPONENT DESCRIPTION

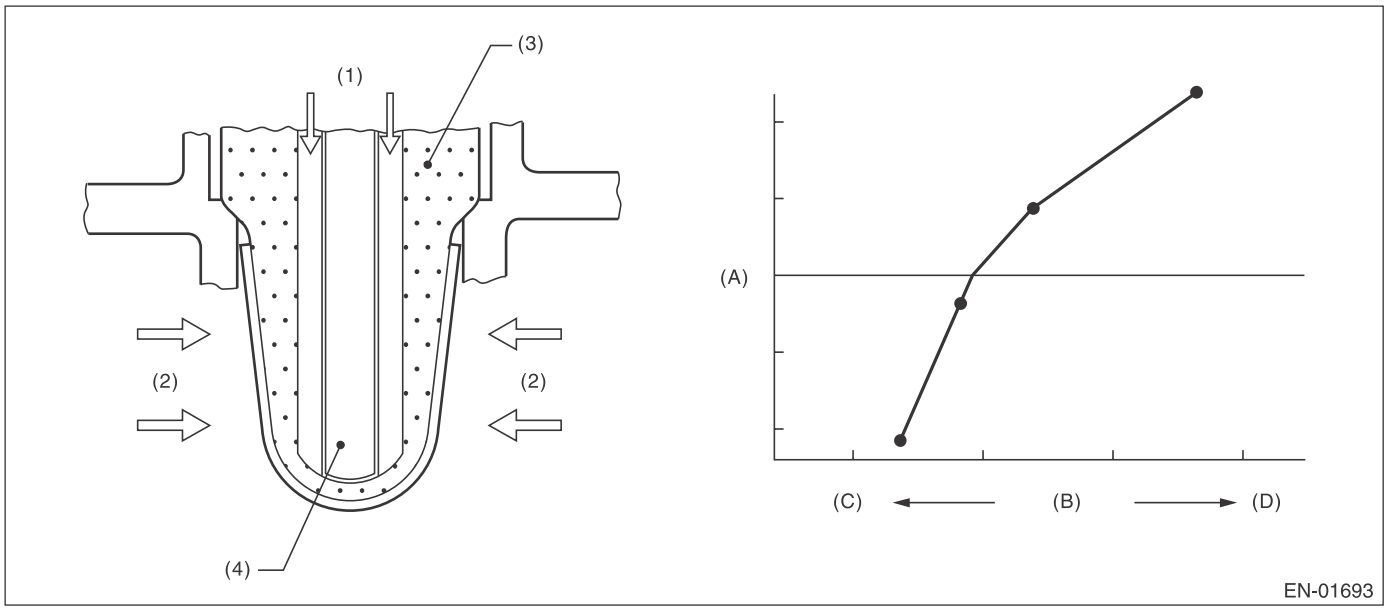

(A) Electromotive force
(B) Air fuel ratio
(C) Lean
(D) Rich

(1) Atmosphere
(3) ZrO_2
(4) Ceramic heater
(2) Exhaust gas

3. ENABLE CONDITION

Secondary Parameters	Enable Conditions
Battery voltage	≥ 10.9 V

4. GENERAL DRIVING CYCLE

Always perform the diagnosis continuously.

5. DIAGNOSTIC METHOD

• Abnormality Judgment

If the duration of time while the following conditions are met is longer than the time indicated, judge as NG.

Judgment Value

Malfunction Criteria	Threshold Value
Input voltage (+)	< 1.128 V
or	
Input voltage (–)	< 0.23 V
or	
|Input voltage (+) – Input voltage (–)|	< 0.644 V

Time Needed for Diagnosis:
Input voltage (+): 1000 ms
Input voltage (–): 1000 ms
|Input voltage (+) – Input voltage (–)|: 1000 ms
Malfunction Indicator Light Illumination: Illuminates as soon as a malfunction occurs.

• Normality Judgment

Judge as OK and clear the NG if the continuous time while the following conditions are established is more than the predetermined time.

Judgment Value

Malfunction Criteria	Threshold Value
Input voltage (+)	≥ 1.128 V
Input voltage (–)	≥ 0.23 V
|Input voltage (+) – Input voltage (–)|	≥ 0.644 V

Time Needed for Diagnosis: Less than 1 second

AE:DTC P0132 O2 SENSOR CIRCUIT HIGH VOLTAGE (BANK 1 SENSOR 1)

1. OUTLINE OF DIAGNOSIS

Detect the open or short circuit of sensor.
Judge as NG, when the element voltage is out of the specified range.

2. COMPONENT DESCRIPTION

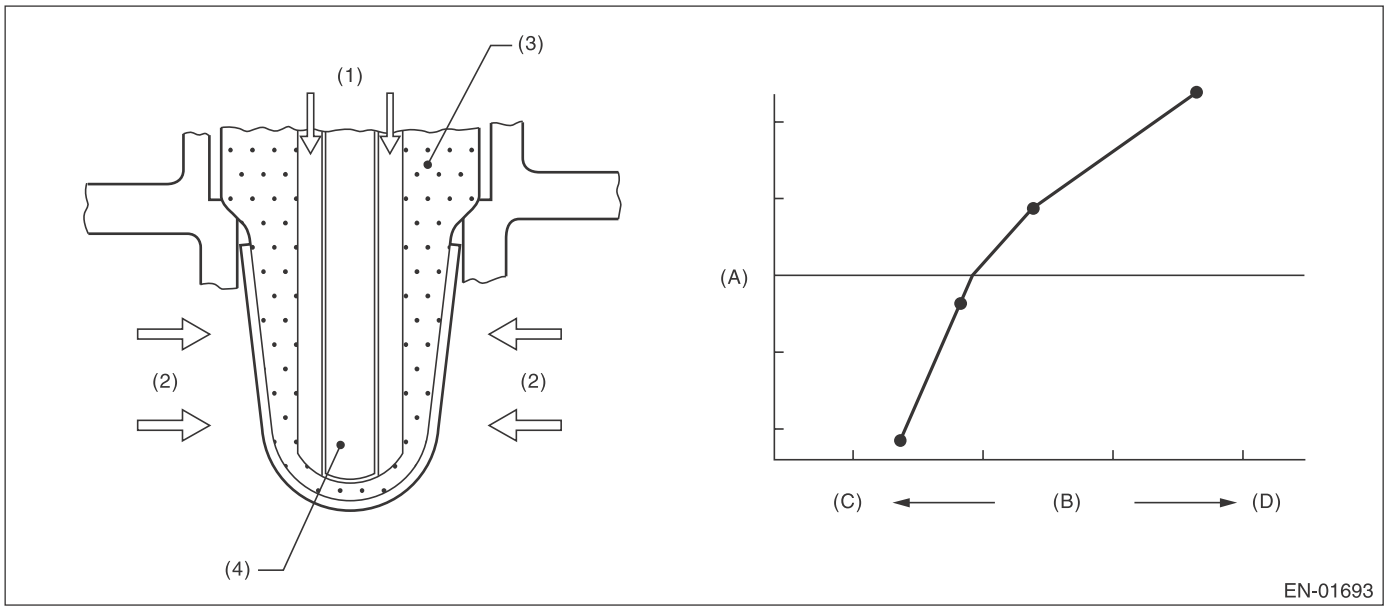

(A) Electromotive force
(B) Air fuel ratio
(C) Lean
(D) Rich

(1) Atmosphere
(2) Exhaust gas
(3) ZrO_2
(4) Ceramic heater

3. ENABLE CONDITION

Secondary Parameters	Enable Conditions
Battery voltage	≥ 10.9 V

4. GENERAL DRIVING CYCLE

Always perform the diagnosis continuously.

5. DIAGNOSTIC METHOD

- **Abnormality Judgment**

If the duration of time while the following conditions are met is longer than the time indicated, judge as NG.

Judgment Value

Malfunction Criteria	Threshold Value
Input voltage (+) or Input voltage (–)	> 3.589 V > 3.541 V

Time Needed for Diagnosis:
Input voltage (+): 1000 ms
Input voltage (–): 1000 ms
Malfunction Indicator Light Illumination: Illuminates as soon as a malfunction occurs.

- **Normality Judgment**

Judge as OK and clear the NG if the continuous time while the following conditions are established is more than the predetermined time.

Judgment Value

Malfunction Criteria	Threshold Value
Input voltage (+)	≤ 3.589 V
Input voltage (–)	≤ 3.541 V

Time Needed for Diagnosis: Less than 1 second

AF:DTC P0133 O2 SENSOR CIRCUIT SLOW RESPONSE (BANK 1 SENSOR 1)

1. OUTLINE OF DIAGNOSIS

Detect the slow response of front oxygen (A/F) sensor.
Front oxygen (A/F) sensor cover has some ventilation holes for exhaust gas. Clogged ventilation holes are diagnosed.
When the holes are clogged, the A/F output variation becomes slow comparing with the actual A/F variation because oxygen which reaches the zirconia layer is insufficient. Therefore, if the sensor cover holes are clogged, the rich to lean judgment in the ECM is delayed when the actual change from rich to lean occurs.
Judge as NG when the actual movement in comparison to the ECM control amount is slow.

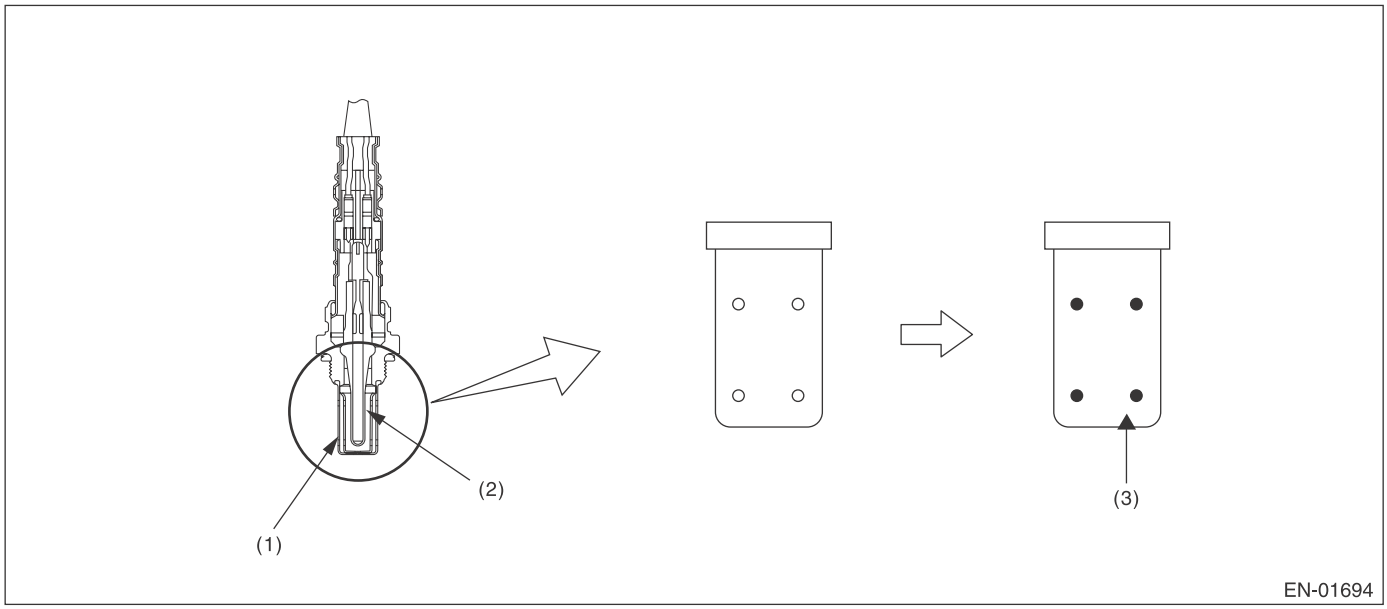

(1) Cover (2) Zirconia (3) Clogging

2. COMPONENT DESCRIPTION

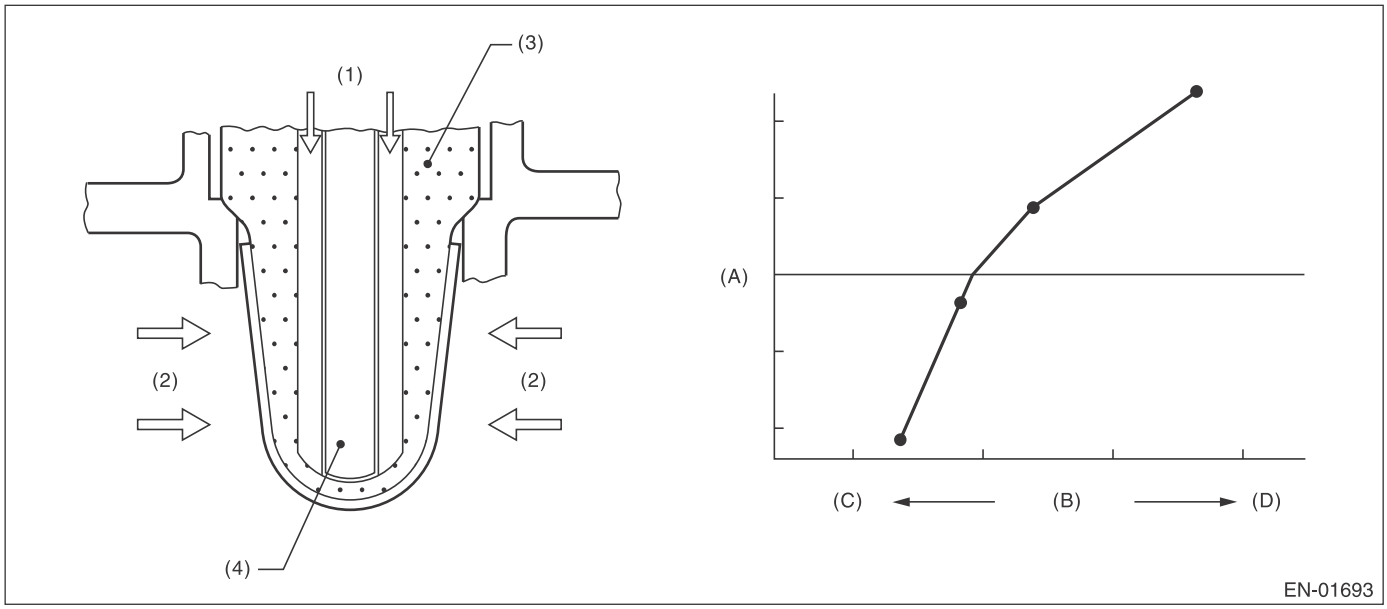

(A) Electromotive force
(B) Air fuel ratio
(C) Lean
(D) Rich

(1) Atmosphere
(2) Exhaust gas
(3) ZrO_2
(4) Ceramic heater

3. ENABLE CONDITION

Secondary Parameters	Enable Conditions
Time needed for all secondary parameters to be in enable conditions	≥ 1024 ms
Battery voltage	≥ 10.9 V
Atmospheric pressure	> 75 kPa (563 mmHg, 22.2 inHg)
Closed loop control with main feedback	Operation
Front oxygen (A/F) sensor impedance	0 Ω — 50 Ω
Elapsed time after starting the engine	≥ 120000 ms
Engine coolant temperature	≥ 72 °C (161.6 °F)
Engine speed	1000 rpm — 3200 rpm
Vehicle speed	10 km/h — 120 km/h (6.2 MPH — 74.6 MPH)
Amount of intake air	10 g/s — 31 g/s (0.35 oz/s — 1.09 oz/s)
Engine load	< 0.02 g/rev (0 oz/rev)
Learning value of EVAP conc. during purge	< 0.2
Total time of operating canister purge	≥ 19.9 s

4. GENERAL DRIVING CYCLE

Perform diagnosis only once at a constant speed of 10 km/h — 120 km/h (6.2 MPH — 74.6 MPH) 120000 ms or more after starting the engine.

5. DIAGNOSTIC METHOD

Calculate faf difference every 32 ms × 4 , and the λ value difference. Calculate the diagnosis value after calculating 820 time(s).

- **Abnormality Judgment**

If the duration of time while the following conditions are met is longer than the time indicated, judge as NG.

Judgment Value

Malfunction Criteria	Threshold Value
parafca = td2faf/td2lmd where, td2faf (N) = td2faf (n–1) + |d2faf (n)| td2lmd (N) = td2lmd (n–1) + |d2lmd (n)| add up to 32 ms × 4 × 820 time(s). d2faf (n) = (faf (n) – faf (n–1)) – (faf (n–1) – faf (n–2)) d2lmd (n) = (lmd (n) – lmd (n–1)) – (lmd (n–1) – lmd (n–2)) faf = main feedback compensation coefficient every 128 milliseconds lmd = output lambda every 128 milliseconds	> 0.379

Time Needed for Diagnosis:32 ms × 4 × 820 time(s)
Malfunction Indicator Light Illumination: Illuminates when malfunction occurs in 2 continuous driving cycles.

- **Normality Judgment**

Judge as OK and clear the NG if the continuous time while the following conditions are established is more than the predetermined time.

Judgment Value

Malfunction Criteria	Threshold Value
parafca = td2faf/td2lmd where, td2faf (N) = td2faf (n–1) + |d2faf (n)| td2lmd (N) = td2lmd (n–1) + |d2lmd (n)| add up to 32 ms × 4 × 820 time(s). d2faf (n) = (faf (n) – faf (n–1)) – (faf (n–1) – faf (n–2)) d2lmd (n) = (lmd (n) – lmd (n–1)) – (lmd (n–1) – lmd (n–2)) faf = main feedback compensation coefficient every 128 milliseconds lmd = output lambda every 128 milliseconds	≤ 0.379

Time Needed for Diagnosis: 32 ms × 4 × 820 time(s)

AG:DTC P0134 O2 SENSOR CIRCUIT NO ACTIVITY DETECTED (BANK 1 SENSOR 1)

1. OUTLINE OF DIAGNOSIS

Detect open circuits of the sensor.
Judge as NG when the impedance of the element is large.

2. COMPONENT DESCRIPTION

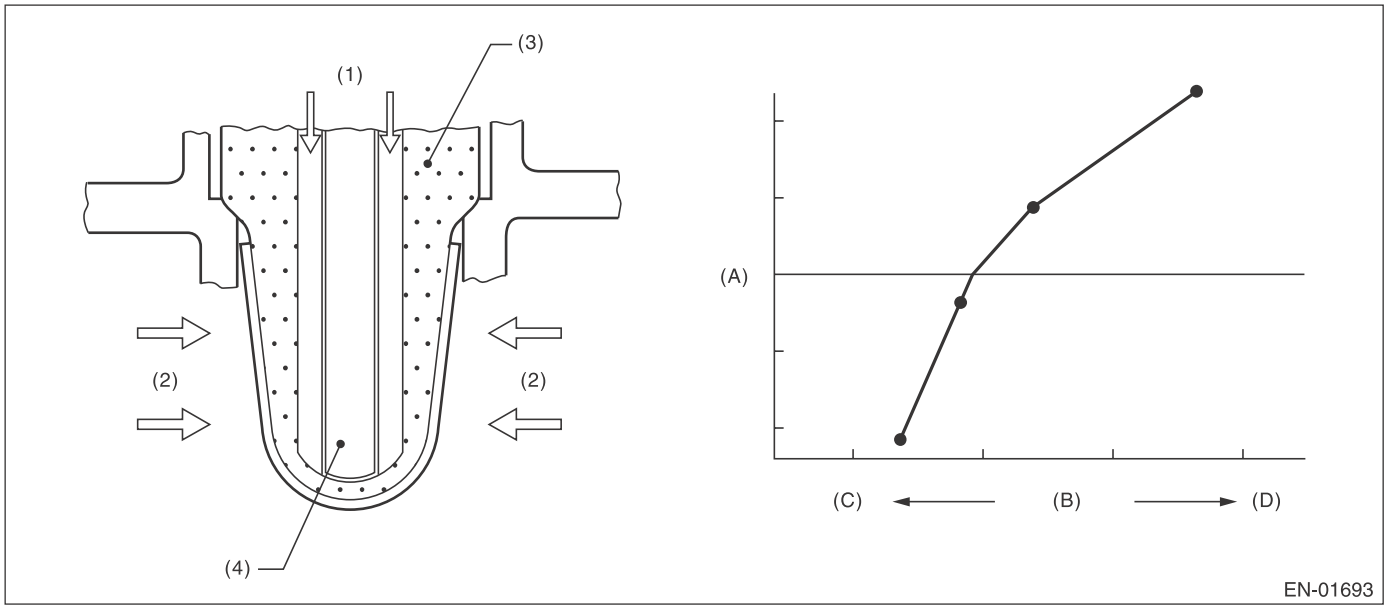

(A) Electromotive force
(B) Air fuel ratio
(C) Lean
(D) Rich

(1) Atmosphere
(2) Exhaust gas
(3) ZrO_2
(4) Ceramic heater

3. ENABLE CONDITION

Secondary Parameters	Enable Conditions
None	

4. GENERAL DRIVING CYCLE

Always perform the diagnosis continuously.

5. DIAGNOSTIC METHOD

• Abnormality Judgment

If the duration of time while the following conditions are met is longer than the time indicated, judge as NG.

Judgment Value

Malfunction Criteria	Threshold Value
Battery voltage	≥ 10.9 V
Time of heater control duty at 70 % or more	≥ 36000 ms
Front oxygen (A/F) sensor impedance.	> 500 Ω

Time Needed for Diagnosis: 5000 ms
Malfunction Indicator Light Illumination: Illuminates as soon as a malfunction occurs.

• Normality Judgment

Judge as OK and clear the NG if the continuous time while the following conditions are established is more than the predetermined time.

Judgment Value

Malfunction Criteria	Threshold Value
Battery voltage	≥ 10.9 V
Front oxygen (A/F) sensor impedance.	≤ 500 Ω

Time Needed for Diagnosis: Less than 1 second

AH:DTC P0137 O2 SENSOR CIRCUIT LOW VOLTAGE (BANK 1 SENSOR 2)

1. OUTLINE OF DIAGNOSIS

Detect continuity NG of the oxygen sensor. If the oxygen sensor voltage reading is not within the probable range considering the operating conditions, judge as NG.

2. COMPONENT DESCRIPTION

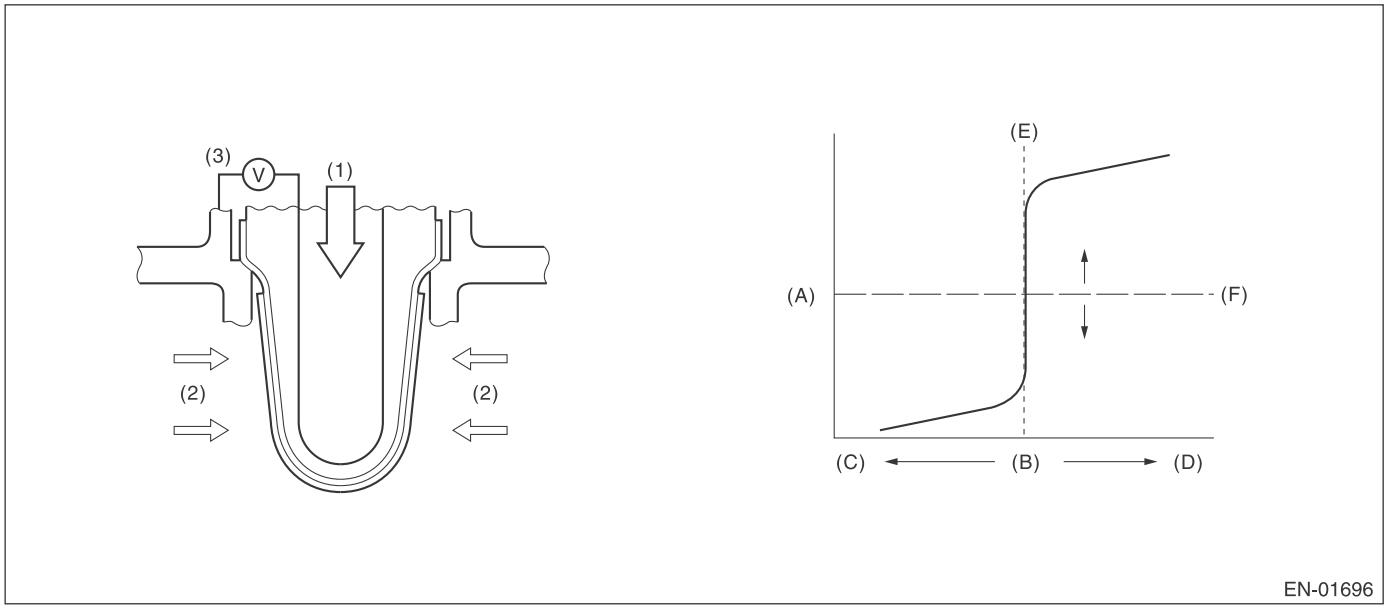

(A)	Electromotive force	(B)	Air fuel ratio	(C)	Rich
(D)	Lean	(E)	Theoretical air fuel ratio	(F)	Comparative voltage
(1)	Atmosphere	(2)	Exhaust gas	(3)	Electromotive force

3. ENABLE CONDITION

Used for abnormality judgment

Secondary Parameters	Enable Conditions
High	
Secondary air system	Not in operation
Closed loop control at the oxygen sensor	In operation
Misfire detection every 200 rotations	< 5 time(s)
Front oxygen (A/F) sensor compensation coefficient	Not in limit value
Battery voltage	≥ 10.9 V
Engine coolant temperature	≥ 72 °C (161.6 °F)
Low (1)	
Secondary air system	Not in operation
Closed loop control at the oxygen sensor	In operation
Misfire detection every 200 rotations	< 5 time(s)
Front oxygen (A/F) sensor compensation coefficient	Not in limit value
Battery voltage	≥ 10.9 V
Engine coolant temperature	≥ 72 °C (161.6 °F)
Amount of intake air	≥ 10 g/s (0.35 oz/s)
Low (2)	
Secondary air system	Not in operation
Closed loop control at the oxygen sensor	In operation
Misfire detection every 200 rotations	< 5 time(s)
Front oxygen (A/F) sensor compensation coefficient	Not in limit value
Battery voltage	≥ 10.9 V
Engine coolant temperature	≥ 72 °C (161.6 °F)
Amount of intake air	< 10 g/s (0.35 oz/s)
Current continuation time of the rear oxygen sensor heater	≥ 25000 ms
Low (3)	
Secondary air system	Not in operation
Closed loop control at the oxygen sensor	In operation
Misfire detection every 200 rotations	< 5 time(s)
Front oxygen (A/F) sensor compensation coefficient	Not in limit value
Battery voltage	≥ 10.9 V
Engine coolant temperature	≥ 72 °C (161.6 °F)
Amount of intake air	< 10 g/s (0.35 oz/s)
Current continuation time of the rear oxygen sensor heater	≥ 25000 ms
Fuel cut	Experienced

Used for normality judgment

Secondary Parameters	Enable Conditions
Secondary air system	Not in operation
Closed loop control at the oxygen sensor	In operation
Misfire detection every 200 rotations	< 5 time(s)
Front oxygen (A/F) sensor compensation coefficient	Not in limit value
Battery voltage	≥ 10.9 V
Engine coolant temperature	≥ 72 °C (161.6 °F)

4. GENERAL DRIVING CYCLE

After starting the engine, continuously perform the diagnosis with the same engine condition.

5. DIAGNOSTIC METHOD

• Abnormality Judgment

If the duration of time while the following conditions are met is longer than the time indicated, judge as NG.

Judgment Value

Malfunction Criteria	Threshold Value	DTC
High Sensor output voltage	> 1.2 V	P0138
Low Sensor output voltage	< 0.03 V	P0137

Time Needed for Diagnosis:

High: 2500 ms
Low (1): 20000 ms
Low (2): 150000 ms
Low (3): Value from Map

Map

Fuel cut time (ms)	0	2000	10000
Time Needed for Diagnosis (ms)	150000	150000	150000

Malfunction Indicator Light Illumination: Illuminates when malfunction occurs in 2 continuous driving cycles.

• Normality Judgment

Judge as OK and clear the NG if the continuous time while the following conditions are established is more than the predetermined time.

Judgment Value

Malfunction Criteria	Threshold Value	DTC
High Sensor output voltage	≤ 1.2 V	P0138
Low Sensor output voltage	≥ 0.03 V	P0137

Time Needed for Diagnosis:

High: Less than 1 s
Low (1): Less than 1 s
Low (2): Less than 1 s
Low (3): Less than 1 s

AI: DTC P0138 O2 SENSOR CIRCUIT HIGH VOLTAGE (BANK 1 SENSOR 2)

1. OUTLINE OF DIAGNOSIS

NOTE:
For the detection standard, refer to DTC P0137. <Ref. to GD(H4DOTC)-61, DTC P0137 O2 SENSOR CIRCUIT LOW VOLTAGE (BANK 1 SENSOR 2), Diagnostic Trouble Code (DTC) Detecting Criteria.>

AJ:DTC P0139 O2 SENSOR CIRCUIT SLOW RESPONSE (BANK 1 SENSOR 2)

1. OUTLINE OF DIAGNOSIS

Detect the slow response of the oxygen sensor.
Judge as NG if either the rich to lean response diagnosis or lean to rich response diagnosis is NG, and judge as OK if both are OK.
[Rich → lean diagnosis response]
1. Measure the response time for oxygen sensor output changes when the A/F ratio changes to rich to lean. If the measured response time is larger than the threshold value, it is NG. If it is smaller, it is OK. Response time calculation is categorized in two by voltage difference.
   - Response time in small voltage difference: Intermediate
   - Response time in large voltage difference: Wide
2. Judge as NG when the oxygen sensor voltage is large (rich) even after deceleration fuel cut has occurred.
[Lean → rich diagnosis response]
1. Measure the response time for oxygen sensor output changes when the A/F ratio changes to lean to rich. If the measured response time is larger than the threshold value, it is NG.
2. Judge as NG when the oxygen sensor voltage remains small when recovering from a deceleration fuel cut.

Diagnostic method

Measure the response time of the output change of the oxygen sensor when the A/F ratio changes to rich to lean. And Judge as NG when the measured response time is larger than the threshold value.

2. COMPONENT DESCRIPTION

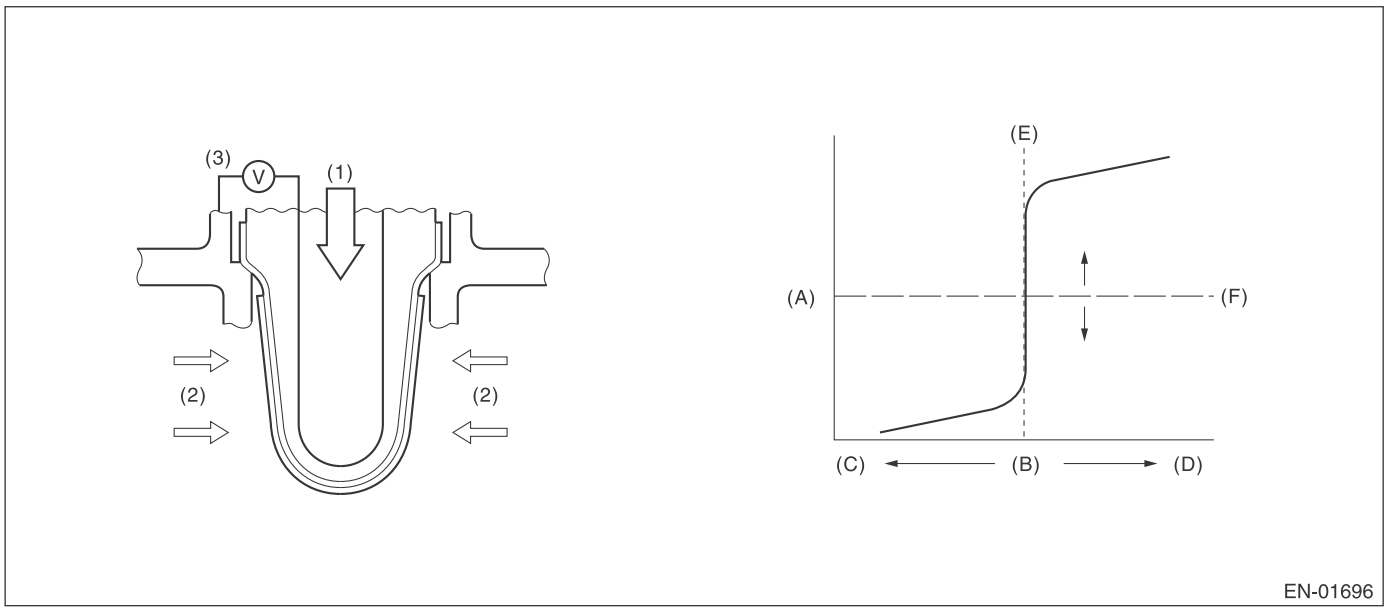

(A)	Electromotive force	(B)	Air fuel ratio	(C)	Rich
(D)	Lean	(E)	Theoretical air fuel ratio	(F)	Comparative voltage
(1)	Atmosphere	(2)	Exhaust gas	(3)	Electromotive force

3. ENABLE CONDITION

Rich → lean diagnosis response

Secondary Parameters	Enable Conditions
Battery voltage	≥ 10.9 V
A/F main feedback control condition	Complete
Deceleration fuel cut time of 5000 ms or more (intermediate) Deceleration fuel cut time of 5000 ms or more (wide)	Experienced
After fuel cut	≥ 2000 ms (Intermediate) ≥ 2000 ms (Wide)
Estimated temperature of the rear oxygen sensor element	≥ 450 °C (842 °F) (Intermediate) ≥ 450 °C (842 °F) (Wide)
Number of deceleration fuel cut	≥ 1 time(s)

4. GENERAL DRIVING CYCLE

Perform diagnosis once during deceleration fuel cut from a constant and high speed driving, when rear oxygen sensor is warmed up sufficiently. (Pay attention to the oxygen sensor voltage for the timing of the deceleration.)

5. DIAGNOSTIC METHOD

- Intermediate

When the oxygen sensor output voltage changes from 0.55 V (rich) to 0.15 V (lean), calculate the minimum response time for output change between 0.5 V and 0.2 V for the judgment criteria.

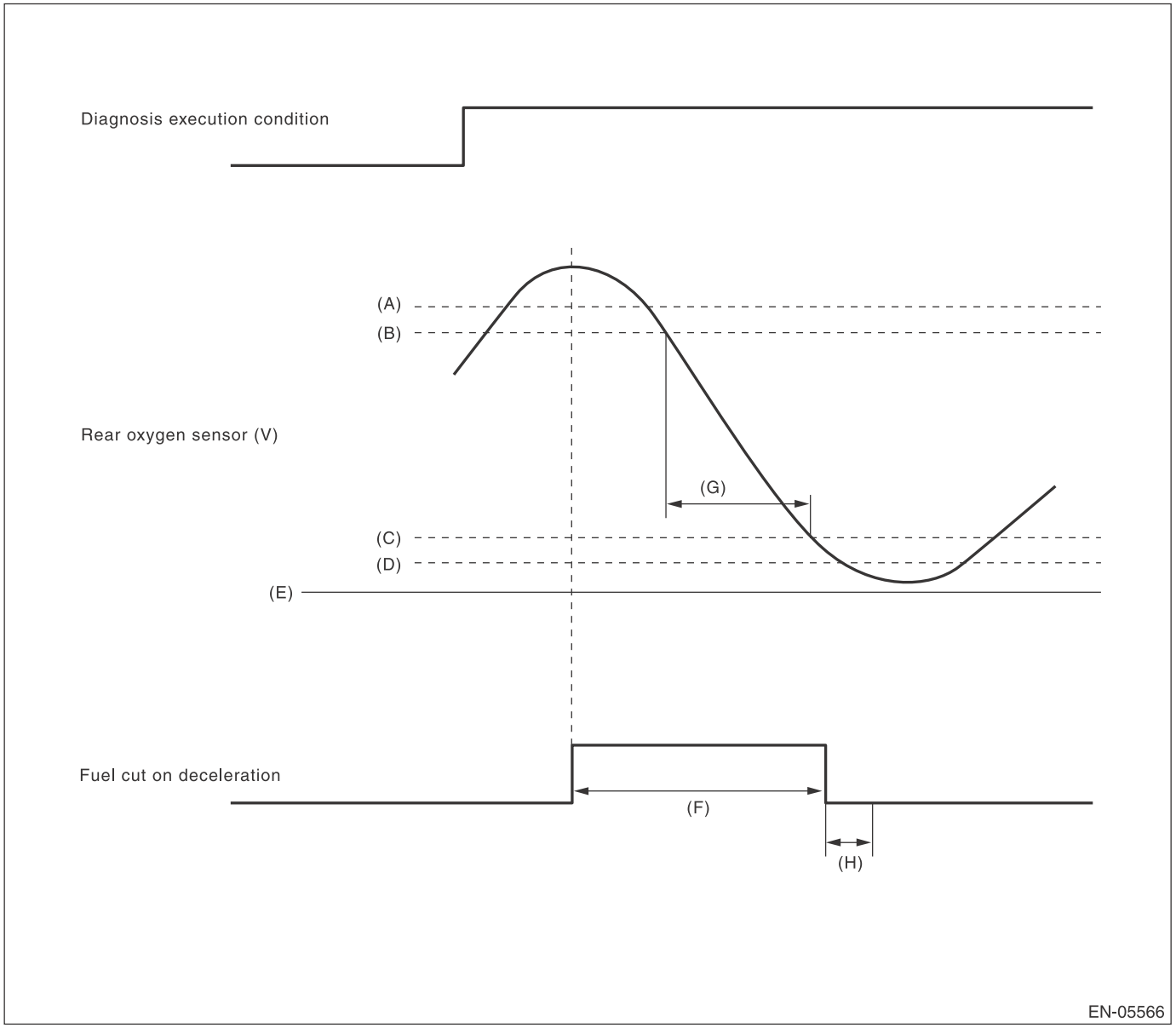

(A) 0.55 V
(B) 0.5 V
(C) 0.2 V
(D) 0.15 V
(E) 0 V
(F) More than 5000 ms
(G) Measure the response time.
(H) Execute the malfunction judgment in 2000 ms from the recovery of fuel cut on deceleration.

- Wide

When the oxygen sensor output voltage changes from 0.65 V (rich) to 0.05 V (lean), calculate the minimum response time for output change between 0.6 V and 0.1 V for the judgment criteria.

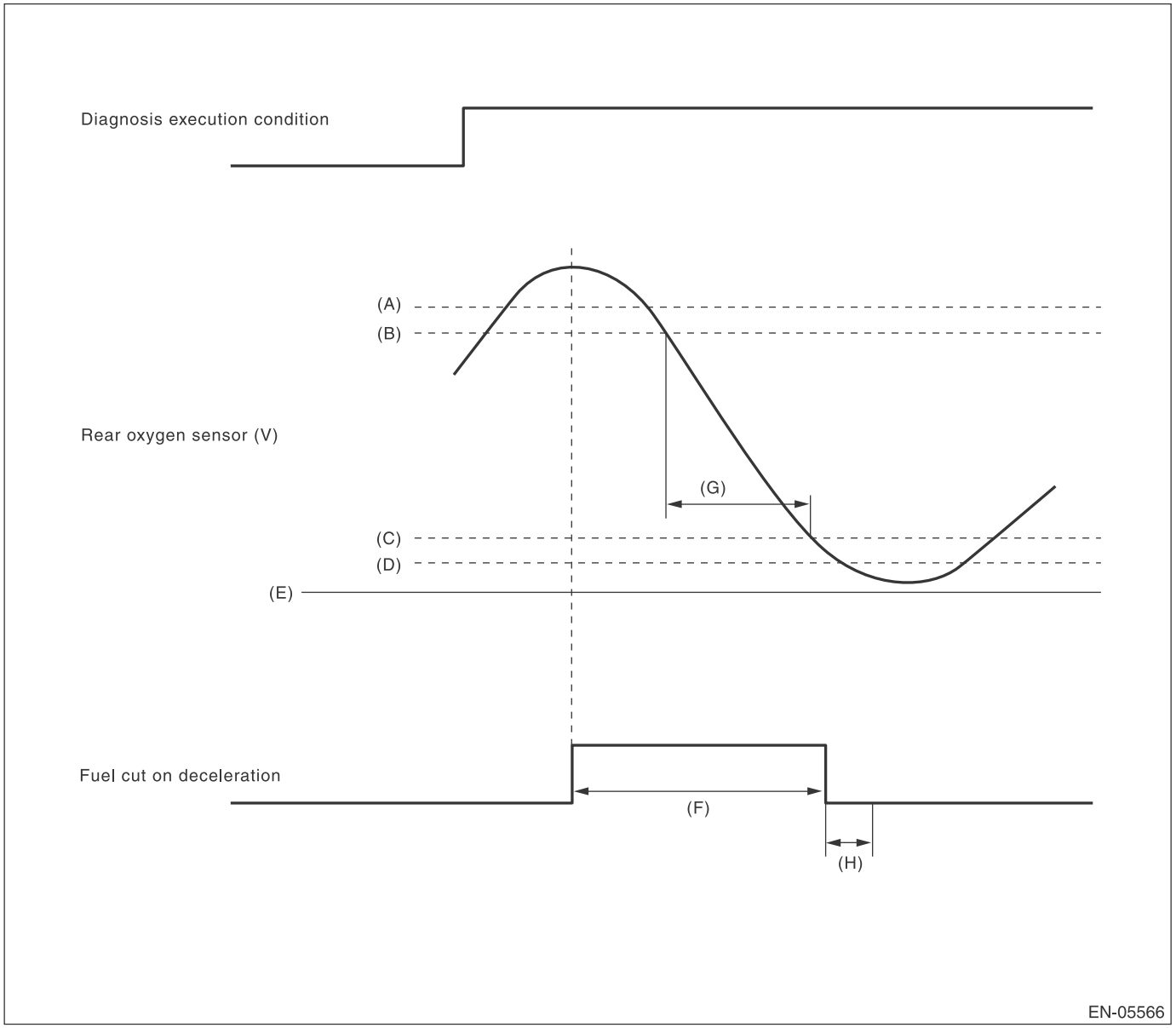

(A) 0.65 V
(B) 0.6 V
(C) 0.1 V
(D) 0.05 V
(E) 0 V
(F) More than 5000 ms
(G) Measure the response time.
(H) Execute the malfunction judgment in 2000 ms from the recovery of fuel cut on deceleration.

- **Abnormality Judgment**

1) Judge as NG when the judgment value is larger than the threshold value after deceleration fuel cut.
Response time (diagnosis value) > threshold value → abnormal

NOTE:
Perform NG judgment only during fuel cut, when exhaust gas apparently changes from rich → lean. Even without deceleration fuel cut, judge as OK if the value is below the threshold.
2) Judge as NG when the oxygen sensor voltage at a deceleration fuel cut is large.
Judge as NG when oxygen sensor voltage is large even after a long period of deceleration fuel cut has completed.

Judgment value (Intermediate)

Malfunction Criteria	Threshold Value
Shortest time change from rich (0.5 V O_2 output) to lean (0.2 V) when voltage reduces from 0.55 V to 0.15 V	> 837 ms
or	
Longest time over 0.55 V	≥ 2000 ms

Judgment value (Wide)

Malfunction Criteria	Threshold Value
Shortest time change from rich (0.6 V O_2 output) to lean (0.1 V) when voltage reduces from 0.65 V to 0.05 V	> Value from Map
or	
Longest time over 0.65 V	≥ 2000 ms

Map

Estimated temperature of rear oxygen sensor element when fuel cut starts °C (°F)	0 (32)	450 (842)	480 (896)	500 (932)	1000 (1832)
Longest time in rich status after fuel cut (ms)	5000	5000	3000	2000	2000

Time Needed for Diagnosis: 1 time(s)
Malfunction Indicator Light Illumination: Illuminates when malfunction occurs in 2 continuous driving cycles.

• **Normality Judgment**

1) Regardless of a deceleration fuel cut, if the response time (diagnosis value) when the oxygen sensor voltage has changed from rich to lean is shorter than the threshold value (judgment value), judge as a normal condition.
Response time (diagnosis value) ≤ threshold value → normal
2) Do not judge as a normal condition.
Judge as OK and clear the NG if the following conditions are established.

Judgment value (Intermediate)

Malfunction Criteria	Threshold Value
Shortest time change from rich (0.5 V O_2 output) to lean (0.2 V) when voltage reduces from 0.55 V to 0.15 V	≤ 837 ms

Judgment value (Wide)

Malfunction Criteria	Threshold Value
Shortest time change from rich (0.6 V O_2 output) to lean (0.1 V) when voltage reduces from 0.65 V to 0.05 V	≤ 2000 ms

Time Needed for Diagnosis: 1 time(s)

6. ENABLE CONDITION

Lean → rich response diagnosis

Secondary Parameters	Enable Conditions
Battery voltage	≥ 10.9 V
A/F main feedback control condition	Complete
Deceleration fuel cut time is 6000 ms or more.	Experienced
After fuel cut	≥ 2000 ms
Number of deceleration fuel cut	≥ 1 time(s)

7. GENERAL DRIVING CYCLE

Perform diagnosis once during deceleration fuel cut from a constant and high speed driving, when rear oxygen sensor is warmed up sufficiently. (Pay attention to the oxygen sensor voltage for the timing of the deceleration.)

8. DIAGNOSTIC METHOD

When the oxygen sensor output voltage changes from 0.25 V (lean) to 0.55 V (rich), calculate the minimum response time for output change between 0.3 V and 0.5 V for the judgment criteria.

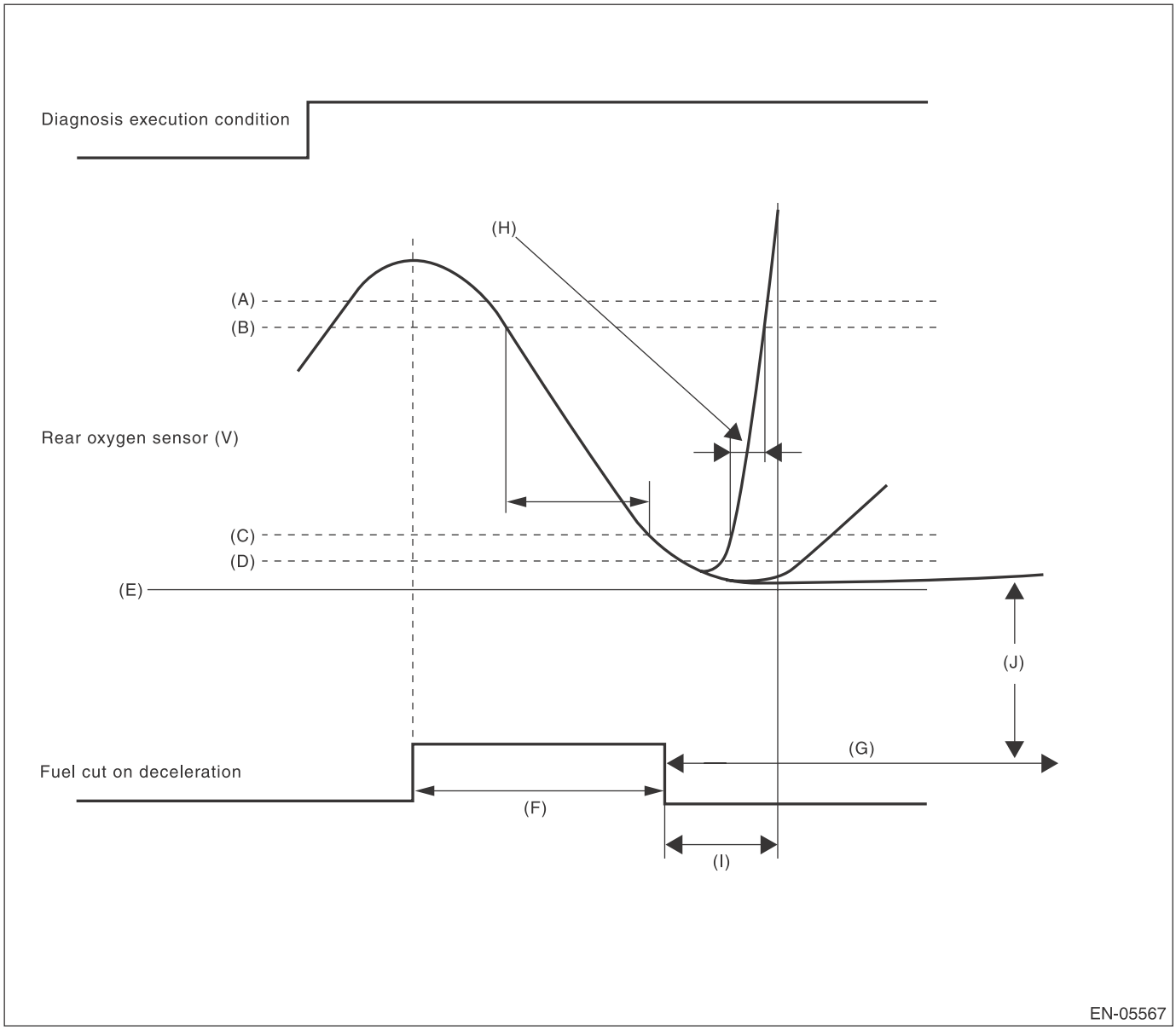

(A) 0.55 V
(B) 0.5 V
(C) 0.3 V
(D) 0.25 V
(E) 0 V
(F) More than 5 seconds
(G) More than 120000 ms
(H) Measure the response time (diagnostic value).
(I) Execute the malfunction judgment in 4000 ms from the recovery of fuel cut on deceleration.
(J) Judge NG when the voltage of rear oxygen sensor is 0.25 V or less for 120000 ms or more after recovery of fuel cut on deceleration.

• **Abnormality Judgment**

1) Judge as NG when the judgment value is larger than the threshold value after deceleration fuel cut.
Response time (diagnosis value) > threshold value → abnormal
2) If the oxygen sensor voltage is small after recovering from a deceleration fuel cut, and remains small, judge as NG.

Judgment Value

Malfunction Criteria	Threshold Value
Shortest time change from lean (0.3 V O_2 output) to rich (0.5 V) when voltage changes from 0.25 V to 0.55 V	> 4000 ms
or	
Longest time under 0.25 V	≥ 120000 ms

Time Needed for Diagnosis: 1 time(s)
Malfunction Indicator Light Illumination: Illuminates when malfunction occurs in 2 continuous driving cycles.

• **Normality Judgment**

1) Regardless of a deceleration fuel cut, if the response time (diagnosis value) when the oxygen sensor voltage has changed from rich to lean is shorter than the threshold value (judgment value), judge as a normal condition.
Response time (diagnosis value) ≤ threshold value → normal
2) Do not judge as a normal condition.
Judge as OK and clear the NG if the following conditions are established.

Judgment Value

Malfunction Criteria	Threshold Value
Shortest time change from lean (0.3 V O_2 output) to rich (0.5 V) when voltage changes from 0.25 V to 0.55 V	≤ 4000 ms

Time Needed for Diagnosis: 1 time(s)

AK:DTC P0140 O2 SENSOR CIRCUIT NO ACTIVITY DETECTED (BANK1 SENSOR2)

1. OUTLINE OF DIAGNOSIS

Detect the rear oxygen sensor open or short circuit. Judge as NG when the rear oxygen sensor voltage can be determined to be abnormal considering conditions such as intake air amount, engine coolant temperature, main feedback control and deceleration fuel cut.

2. COMPONENT DESCRIPTION

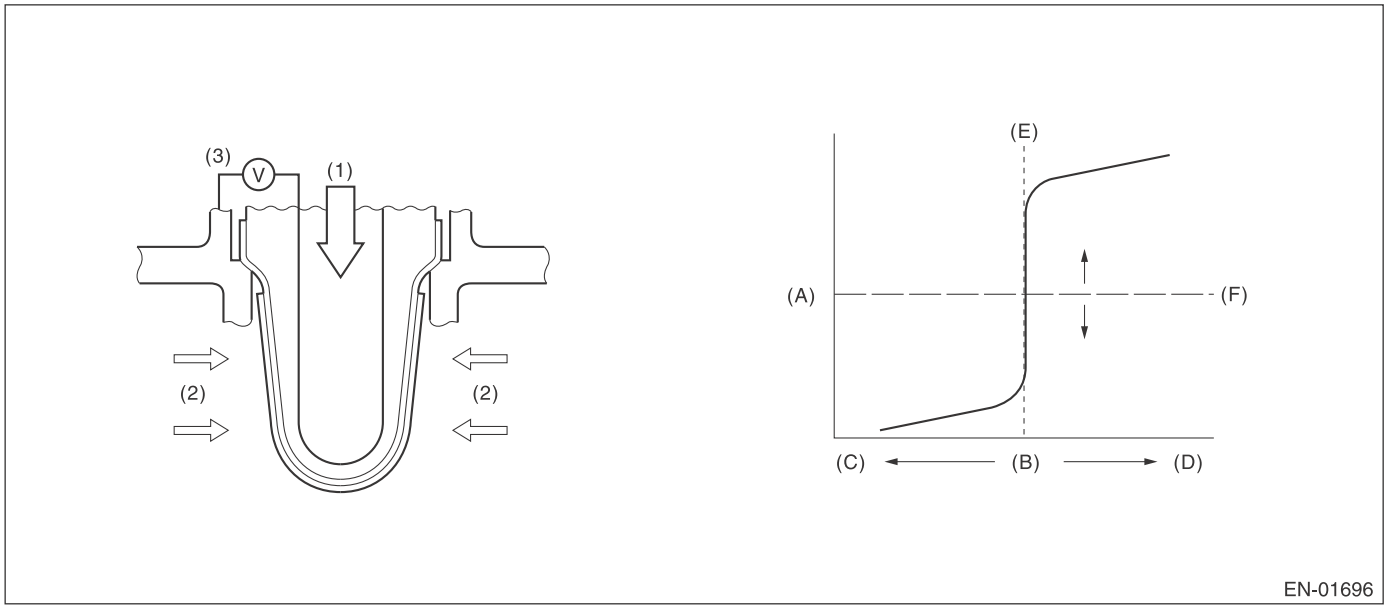

(A)	Electromotive force	(B)	Air fuel ratio	(C)	Rich
(D)	Lean	(E)	Theoretical air fuel ratio	(F)	Comparative voltage
(1)	Atmosphere	(2)	Exhaust gas	(3)	Electromotive force

3. ENABLE CONDITION (USED ONLY FOR MALFUNCTION JUDGMENT)

Secondary Parameters	Enable Conditions
Closed loop control at the rear oxygen sensor	In operation
Target output voltage of rear oxygen sensor	≥ 0.55 V + 0.05 V
Amount of intake air	≥ 10 g/s (0.35 oz/s)
Engine coolant temperature	≥ 72 °C (161.6 °F)
Misfire detection every 200 rotations	< 5 time(s)
Front oxygen (A/F) sensor compensation coefficient	Not in limit value
Battery voltage	≥ 10.9 V
Deceleration fuel cut of 5000 ms or more.	Experienced

4. GENERAL DRIVING CYCLE

Perform the diagnosis once after starting the engine.

5. DIAGNOSTIC METHOD

• Abnormality Judgment

If the duration of time while the following conditions are met is longer than the time indicated, judge as NG.

Judgment Value

Malfunction Criteria	Threshold Value
Minimum output voltage	> 0.15 V
or	
Maximum output voltage	< 0.55 V

Time Needed for Diagnosis: 200000 ms
Malfunction Indicator Light Illumination: Illuminates when malfunction occurs in 2 continuous driving cycles.

• Normality Judgment

Judge as OK and clear the NG if the following conditions are established.

Judgment Value

Malfunction Criteria	Threshold Value
Diagnosis of the rear oxygen sensor voltage low side	Incomplete
Minimum output voltage	≤ 0.15 V
Maximum output voltage	≥ 0.55 V

AL:DTC P0141 O2 SENSOR HEATER CIRCUIT (BANK1 SENSOR2)

1. OUTLINE OF DIAGNOSIS

Detect the malfunction of rear oxygen sensor heater.
While observing the engine condition, judge as NG if the rear oxygen sensor impedance is great.

2. COMPONENT DESCRIPTION

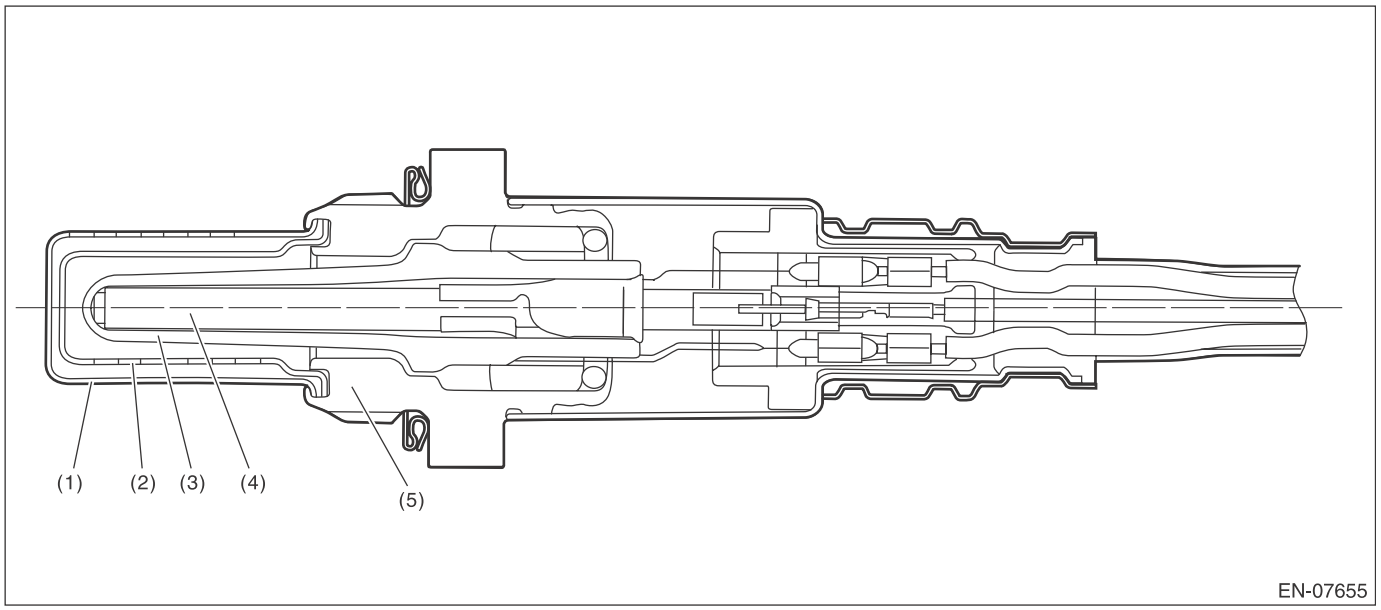

(1) Element cover (outer)
(2) Element cover (inner)
(3) Sensor element
(4) Ceramic heater
(5) Sensor housing

3. ENABLE CONDITIONS

Secondary Parameters	Enable Conditions
Battery voltage	≥ 10.9 V
Elapsed time after starting the engine	≥ 1000 ms
Engine coolant temperature	≥ 72 °C (161.6 °F)
A/F sensor element impedance	≤ 50 Ω
A/F sensor heater control duty	≤ 75 %
Rear oxygen sensor heater control duty	< 70 %

4. GENERAL DRIVING CYCLE

Perform the diagnosis continuously after 1000 ms seconds or more have passed since the engine started.

5. DIAGNOSTIC METHOD

• Abnormality Judgment

If the duration of time while the following conditions are met is longer than the time indicated, judge as NG.

Judgment Value

Malfunction Criteria	Threshold Value
Output terminal for heater characteristics fault detection	Low

Time Needed for Diagnosis: 4 ms × 2500 time (s)
Malfunction Indicator Light Illumination: Illuminates when malfunction occurs in 2 continuous driving cycles.

• Normality Judgment

Judge as OK and clear the NG if the continuous time while the following conditions are established is more than the predetermined time.

Judgment Value

Malfunction Criteria	Threshold Value
Output terminal for heater characteristics fault detection	High

Time Needed for Diagnosis: 4 ms × 2500 time (s)

AM:DTC P0171 SYSTEM TOO LEAN (BANK 1)

1. OUTLINE OF DIAGNOSIS

Detect fuel system malfunction by the amount of main feedback control.

DIAGNOSTIC METHOD

Fuel system is diagnosed by comparing the target air fuel ratio calculated by ECM with the actual air fuel ratio measured by sensor.

2. ENABLE CONDITION

Secondary Parameters	Enable Conditions
A/F main learning system	In operation
Engine coolant temperature	≥ 72 °C (161.6 °F)
Engine load change	< 0.02 g/rev (0 oz/rev)
Engine load	≥ Value of Map 1

Map 1

Engine speed (rpm)	Idling	700	1200	1600	2000	2400	2800	3200	3600	4000	4400
Measured value (g (oz)/rev)	na	0.230 (0.01)	0.217 (0.01)	0.213 (0.01)	0.210 (0.01)	0.210 (0.01)	0.220 (0.01)	0.223 (0.01)	0.240 (0.01)	0.252 (0.01)	0.261 (0.01)

3. GENERAL DRIVING CYCLE

Perform the diagnosis continuously at idling or at a constant speed after warming up the engine.

4. DIAGNOSTIC METHOD

- **Abnormality Judgment**

Compare the diagnosed value (fsobd) with the threshold value, and if a condition meeting the malfunction criteria below continues for 10 s × 5 time(s) or more, judge that there is a fault in the fuel system.

Judgment Value

Malfunction Criteria	Threshold Value
fsobd = (sglmd – tglmda) + faf + flaf In this case: sglmd = measured lambda tglmda = target lambda faf = Main feedback compensation coefficient (every 64 ms) flaf = main feedback learning compensation coefficient	≥ Value from Map 2

Map 2

Amount of air (g (oz)/s)	0 (0)	2.34375 (0.08)	4.6875 (0.17)	7.03125 (0.25)	9.375 (0.33)	11.71875 (0.41)	14.0625 (0.5)
fsobdL1 (%)	1.4	1.4	1.368623	1.319185	1.26975	1.265	1.265

Time Needed for Diagnosis: 10 s × 5 time(s)
Malfunction Indicator Light Illumination: Illuminates when malfunction occurs in 2 continuous driving cycles.

- **Normality Judgment**

Judge as OK and clear the NG if the continuous time while the following conditions are established is more than the predetermined time.

Judgment Value

Malfunction Criteria	Threshold Value
fsobd = (sglmd – tglmda) + faf + flaf	< 1.2

Time Needed for Diagnosis: 10 s

AN:DTC P0172 SYSTEM TOO RICH (BANK 1)

1. OUTLINE OF DIAGNOSIS

Detect fuel system malfunction by the amount of main feedback control.

Diagnostic method

Fuel system is diagnosed by comparing the target air fuel ratio calculated by ECM with the actual air fuel ratio measured by sensor.

2. ENABLE CONDITION

Secondary Parameters	Enable Conditions
A/F main learning system	In operation
Engine coolant temperature	≥ 72 °C (161.6 °F)
Engine load change	≤ 0.02 g/rev (0 oz/rev)
Learning value of EVAP conc.	< 0.1
Cumulative time of canister purge after engine start	≥ 20 s
Continuous period after canister purge starting	≥ 29884 ms
Engine load	≥ Value of Map 1

Map 1

Engine speed (rpm)	Idling	700	1200	1600	2000	2400	2800	3200	3600	4000	4400
Measured value (g (oz)/rev)	na	0.230 (0.01)	0.217 (0.01)	0.213 (0.01)	0.210 (0.01)	0.210 (0.01)	0.220 (0.01)	0.223 (0.01)	0.240 (0.01)	0.252 (0.01)	0.261 (0.01)

3. GENERAL DRIVING CYCLE

Perform the diagnosis continuously at idling or at a constant speed after warming up the engine.

4. DIAGNOSTIC METHOD

• Abnormality Judgment

Compare the diagnosed value (fsobd) with the threshold value, and if a condition meeting the malfunction criteria below continues for 10 s × 5 time(s) or more, judge that there is a fault in the fuel system.

Judgment Value

Malfunction Criteria	Threshold Value
fsobd = (sglmd – tglmda) + faf + flaf In this case: sglmd = measured lambda tglmda = target lambda faf = Main feedback compensation coefficient (every 64 ms) flaf = main feedback learning compensation coefficient	< Value of Map 2

Map 2

Amount of air (g (oz)/s)	0 (0)	2.34375 (0.08)	4.6875 (0.17)	7.03125 (0.25)	9.375 (0.33)	11.71875 (0.41)	14.0625 (0.5)
fsobdL1 (%)	0.6	0.6	0.63137	0.68082	0.71025	0.72525	0.73025

Time Needed for Diagnosis: 10 s × 5 time(s)
Malfunction Indicator Light Illumination: Illuminates when malfunction occurs in 2 continuous driving cycles.

• Normality Judgment

Judge as OK when the malfunction criteria below are met for 10 seconds.

Judgment Value

Malfunction Criteria	Threshold Value
fsobd = (sglmd – tglmda) + faf + flaf	≥ 0.8

Time Needed for Diagnosis: 10 s

AO:DTC P0181 FUEL TEMPERATURE SENSOR “A” CIRCUIT RANGE/PERFORMANCE

1. OUTLINE OF DIAGNOSIS

Detect faults in the fuel temperature sensor output properties.
Diagnosis is performed in two methods (drift diagnosis and stuck diagnosis). If either is NG, judge as NG. If both are OK, Judge as OK and clear the NG.

Drift Diagnosis

Normally fuel temperature is lower than engine coolant temperature. When the fuel temperature becomes higher than the engine coolant temperature, the range is considered to be shifted, and judged as NG.

Stuck Diagnosis

As the engine warms up (cumulative amount of intake air after starting is large), if the fuel temperature which should rise does not, determine as being stuck and NG.

2. COMPONENT DESCRIPTION

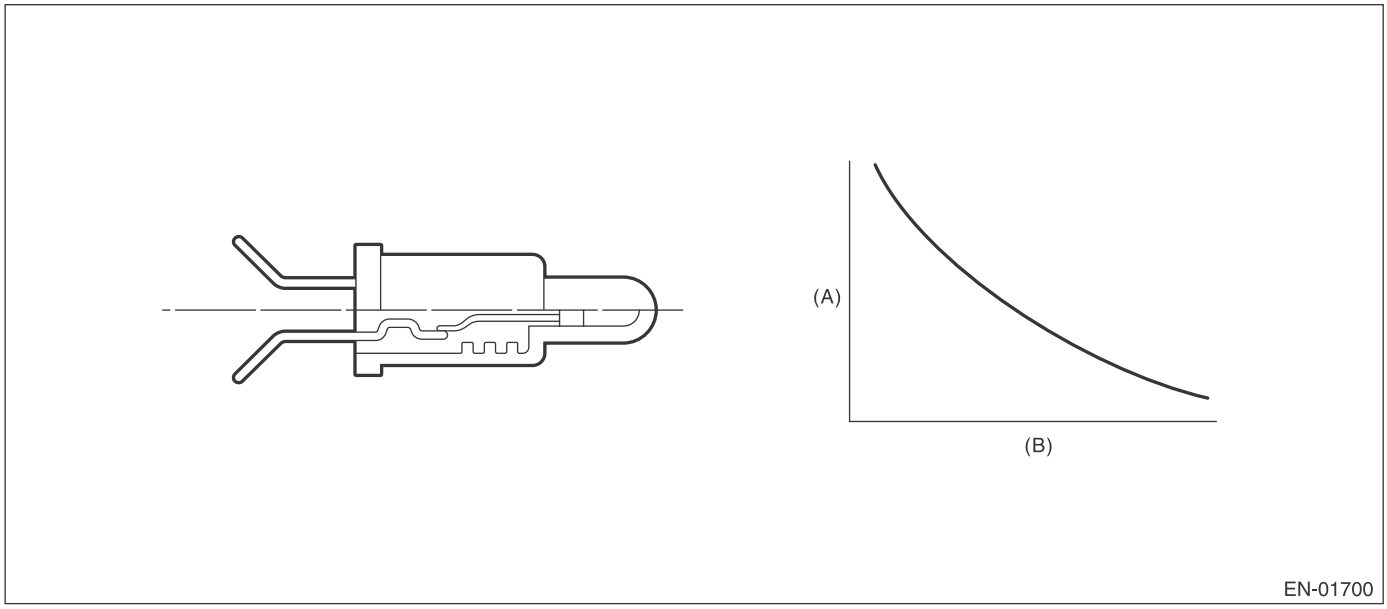

(A) Resistance value (Ω)
(B) Fuel temperature °C (°F)

3. ENABLE CONDITION

DRIFT DIAGNOSIS

Secondary Parameters	Enable Conditions
None	

4. GENERAL DRIVING CYCLE

Always perform the diagnosis continuously.

5. DIAGNOSTIC METHOD

• Abnormality Judgment

If the duration of time while the following conditions are met is longer than the time indicated, judge as NG.

Judgment Value

Malfunction Criteria	Threshold Value
Fuel level	≥ 10.5 ℓ (2.77 US gal, 2.31 Imp gal)
Elapsed time after starting the engine	≥ 20 s
Engine coolant temperature – Engine coolant temperature at engine start	> 10 °C (50 °F)
Fuel temperature – Engine coolant temperature	≥ 10 °C (50 °F)
Battery voltage	≥ 10.9 V

Time Needed for Diagnosis: 120 s
Malfunction Indicator Light Illumination: Illuminates when malfunction occurs in 2 continuous driving cycles.

• Normality Judgment

Judge as OK and clear the NG if the continuous time while the following conditions are established is more than the predetermined time.

Judgment Value

Malfunction Criteria	Threshold Value
Fuel level	≥ 10.5 ℓ (2.77 US gal, 2.31 Imp gal)
Elapsed time after starting the engine	≥ 20 s
Engine coolant temperature – Engine coolant temperature at engine start	> 10 °C (50 °F)
Fuel temperature – Engine coolant temperature	< 10 °C (50 °F)
Battery voltage	≥ 10.9 V
Engine coolant temperature	< 70 °C (158 °F)

Time Needed for Diagnosis: Less than 1 second

6. ENABLE CONDITION

Stuck Diagnosis

Secondary Parameters	Enable Conditions
Elapsed time after starting the engine	≥ 20000 ms
Battery voltage	≥ 10.9 V

7. GENERAL DRIVING CYCLE

Perform the diagnosis continuously 20 seconds after starting engine.

8. DIAGNOSTIC METHOD

- **Abnormality Judgment**

Judge as NG when the following conditions are established.

Judgment Value

Malfunction Criteria	Threshold Value
Accumulated amount of intake air	≥ 551043 g (19435.29 oz)
Fuel temperature difference between Max. and Min.	< 2 °C (35.6 °F)

Time Needed for Diagnosis: Less than 1 second
Malfunction Indicator Light Illumination: Illuminates when malfunction occurs in 2 continuous driving cycles.

- **Normality Judgment**

Judge as OK and clear the NG if the following conditions are established.

Judgment Value

Malfunction Criteria	Threshold Value
Fuel temperature difference between Max. and Min.	≥ 2 °C (35.6 °F)

Time Needed for Diagnosis: Less than 1 second

AP:DTC P0182 FUEL TEMPERATURE SENSOR “A” CIRCUIT LOW INPUT

1. OUTLINE OF DIAGNOSIS

Detect the open or short circuit of fuel temperature sensor.
Judge as NG if out of specification.

2. COMPONENT DESCRIPTION

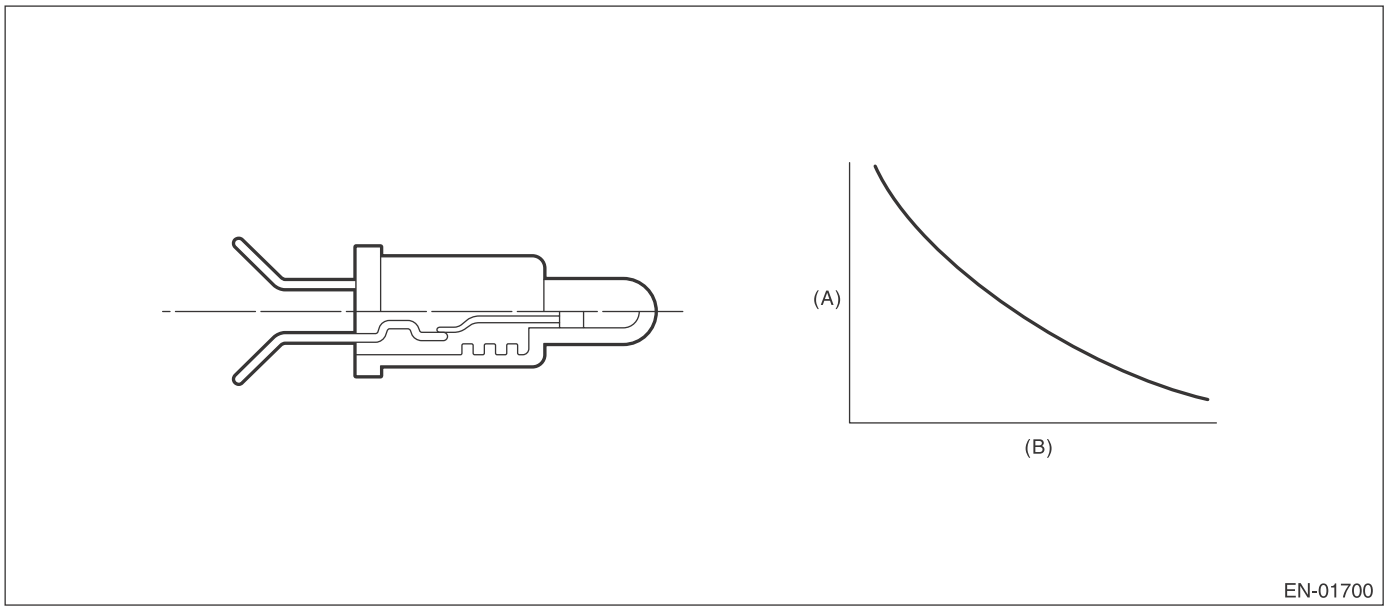

(A) Resistance value (Ω) (B) Fuel temperature °C (°F)

3. ENABLE CONDITION

Secondary Parameters	Enable Conditions
None	

4. GENERAL DRIVING CYCLE

Always perform the diagnosis continuously.

5. DIAGNOSTIC METHOD

- **Abnormality Judgment**

If the duration of time while the following conditions are met is longer than the time indicated, judge as NG.

Judgment Value

Malfunction Criteria	Threshold Value
Output voltage	< 0.573 V
Battery voltage	≥ 10.9 V

Time Needed for Diagnosis: 2500 ms
Malfunction Indicator Light Illumination: Illuminates as soon as a malfunction occurs.

- **Normality Judgment**

Judge as OK and clear the NG if the continuous time while the following conditions are established is more than the predetermined time.

Judgment Value

Malfunction Criteria	Threshold Value
Output voltage	≥ 0.573 V
Battery voltage	≥ 10.9 V

Time Needed for Diagnosis: Less than 1 second

AQ:DTC P0183 FUEL TEMPERATURE SENSOR “A” CIRCUIT HIGH INPUT

1. OUTLINE OF DIAGNOSIS

Detect the open or short circuit of fuel temperature sensor.
Judge as NG if out of specification.

2. COMPONENT DESCRIPTION

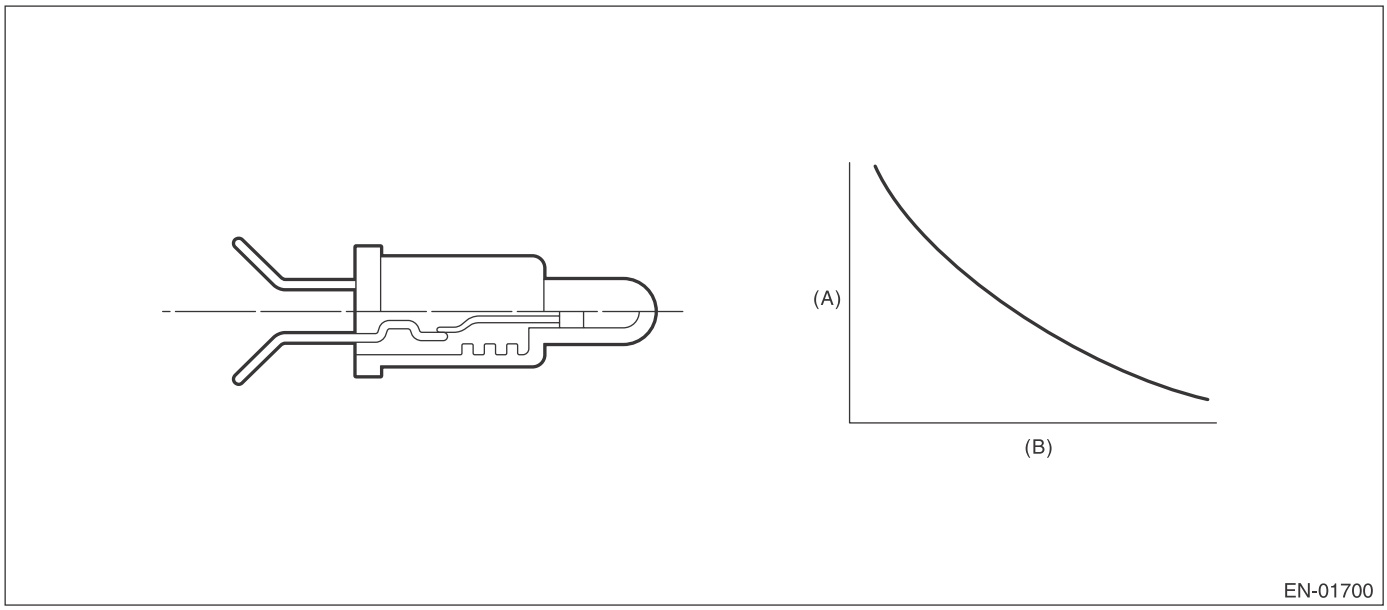

(A) Resistance value (Ω) (B) Fuel temperature °C (°F)

3. ENABLE CONDITION

Secondary Parameters	Enable Conditions
None	

4. GENERAL DRIVING CYCLE

Always perform the diagnosis continuously.

5. DIAGNOSTIC METHOD

- **Abnormality Judgment**

If the duration of time while the following conditions are met is longer than the time indicated, judge as NG.

Judgment Value

Malfunction Criteria	Threshold Value
Output voltage	≥ 4.716 V
Battery voltage	≥ 10.9 V

Time Needed for Diagnosis: 2500 ms
Malfunction Indicator Light Illumination: Illuminates as soon as a malfunction occurs.

- **Normality Judgment**

Judge as OK and clear the NG if the continuous time while the following conditions are established is more than the predetermined time.

Judgment Value

Malfunction Criteria	Threshold Value
Output voltage	< 4.716 V
Battery voltage	≥ 10.9 V

Time Needed for Diagnosis: Less than 1 second

AR:DTC P0222 THROTTLE/PEDAL POSITION SENSOR/SWITCH “B” CIRCUIT LOW

1. OUTLINE OF DIAGNOSIS

Detect the open or short circuit of throttle position sensor 2.
Judge as NG if out of specification.

2. COMPONENT DESCRIPTION

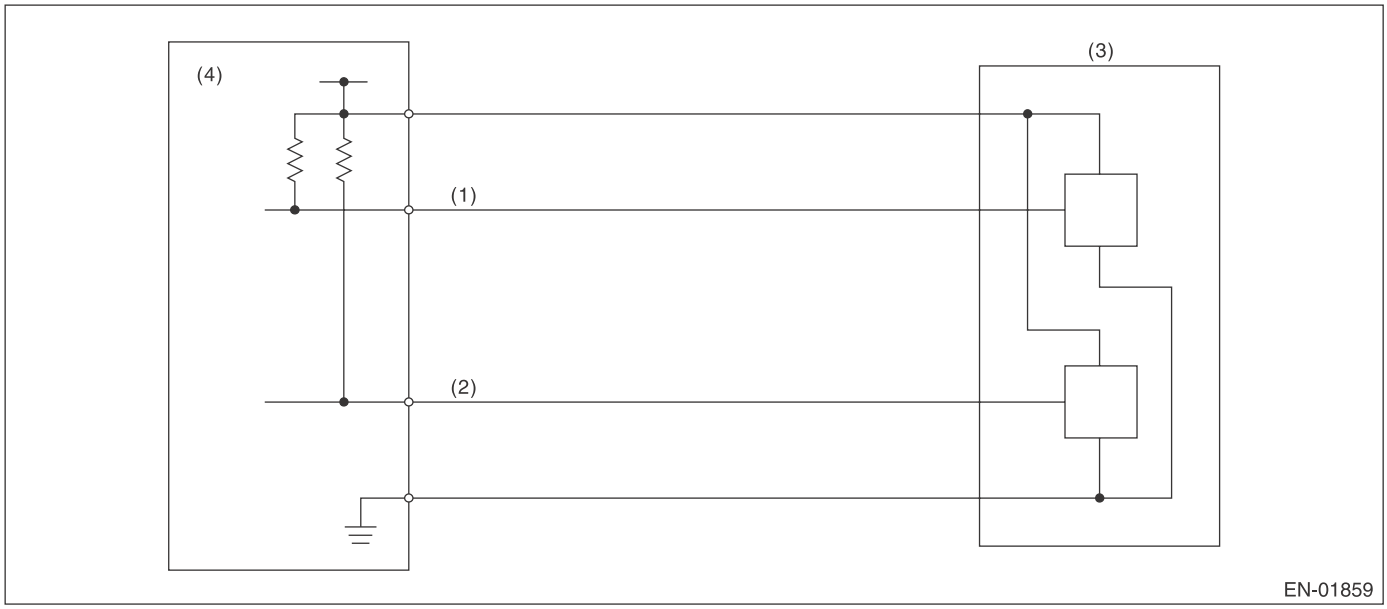

(1) Throttle position sensor 1 signal
(2) Throttle position sensor 2 signal
(3) Throttle position sensor
(4) Engine control module (ECM)

3. ENABLE CONDITION

Secondary Parameters	Enable Conditions
Ignition switch	ON
Battery voltage	≥ 6 V

4. GENERAL DRIVING CYCLE

Always perform the diagnosis continuously.

5. DIAGNOSTIC METHOD

• Abnormality Judgment

If the duration of time while the following conditions are met is longer than the time indicated, judge as NG.

Judgment Value

Malfunction Criteria	Threshold Value
Sensor 2 input voltage	≤ 0.926 V

Time Needed for Diagnosis: 24 ms
Malfunction Indicator Light Illumination: Illuminates as soon as a malfunction occurs.

• Normality Judgment

Judge as OK and clear the NG if the continuous time while the following conditions are established is more than the predetermined time.

Judgment Value

Malfunction Criteria	Threshold Value
Sensor 2 input voltage	> 0.926 V

Time Needed for Diagnosis: 24 ms

AS:DTC P0223 THROTTLE/PEDAL POSITION SENSOR/SWITCH “B” CIRCUIT HIGH

1. OUTLINE OF DIAGNOSIS

Detect the open or short circuit of throttle position sensor 2.
Judge as NG if out of specification.

2. COMPONENT DESCRIPTION

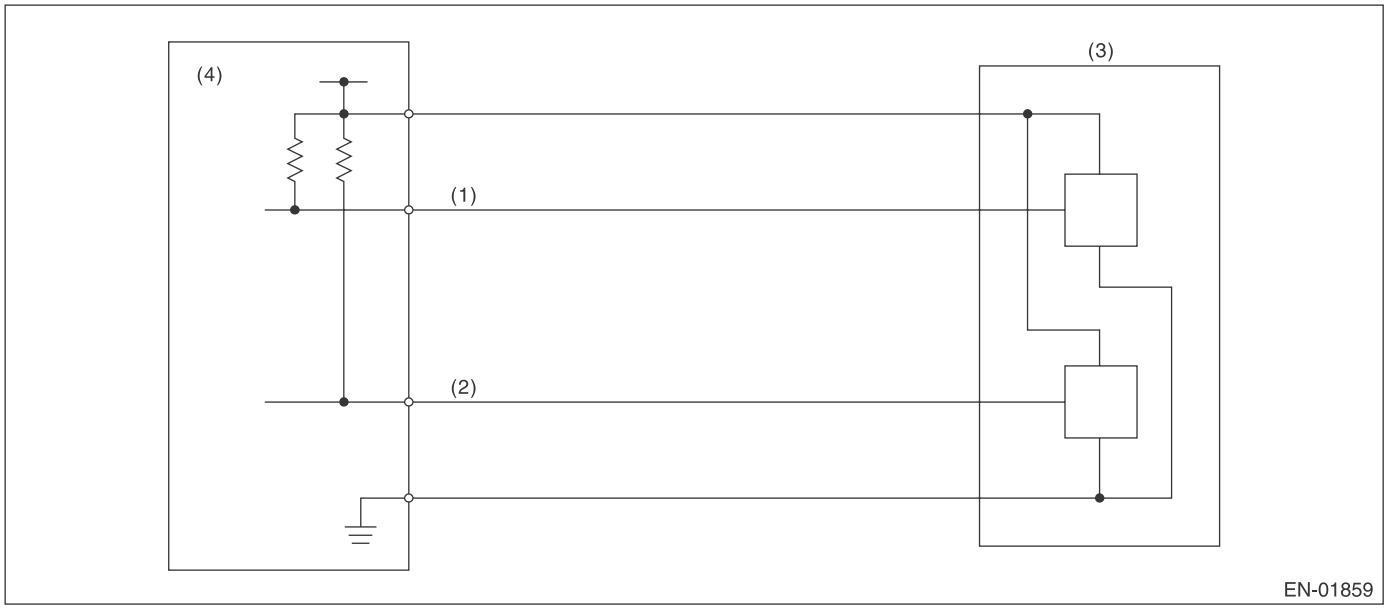

(1) Throttle position sensor 1 signal
(2) Throttle position sensor 2 signal
(3) Throttle position sensor
(4) Engine control module (ECM)

3. ENABLE CONDITION

Secondary Parameters	Enable Conditions
Ignition switch	ON
Battery voltage	≥ 6 V

4. GENERAL DRIVING CYCLE

Always perform the diagnosis continuously.

5. DIAGNOSTIC METHOD

• Abnormality Judgment

If the duration of time while the following conditions are met is longer than the time indicated, judge as NG.

Judgment Value

Malfunction Criteria	Threshold Value
Sensor 2 input voltage	≥ 4.858 V

Time Needed for Diagnosis: 24 ms
Malfunction Indicator Light Illumination: Illuminates as soon as a malfunction occurs.

• Normality Judgment

Judge as OK and clear the NG if the continuous time while the following conditions are established is more than the predetermined time.

Judgment Value

Malfunction Criteria	Threshold Value
Sensor 2 input voltage	< 4.858 V

Time Needed for Diagnosis: 24 ms

AT:DTC P0230 FUEL PUMP PRIMARY CIRCUIT

1. OUTLINE OF DIAGNOSIS

Detect the malfunction of fuel pump control unit.
Judge as NG when the NG signal is sent through a diagnostic line coming from the fuel pump control unit.
Fuel pump control unit detects the open or short circuit malfunction for each line, and then sends NG signals if one of them is found NG.

2. COMPONENT DESCRIPTION

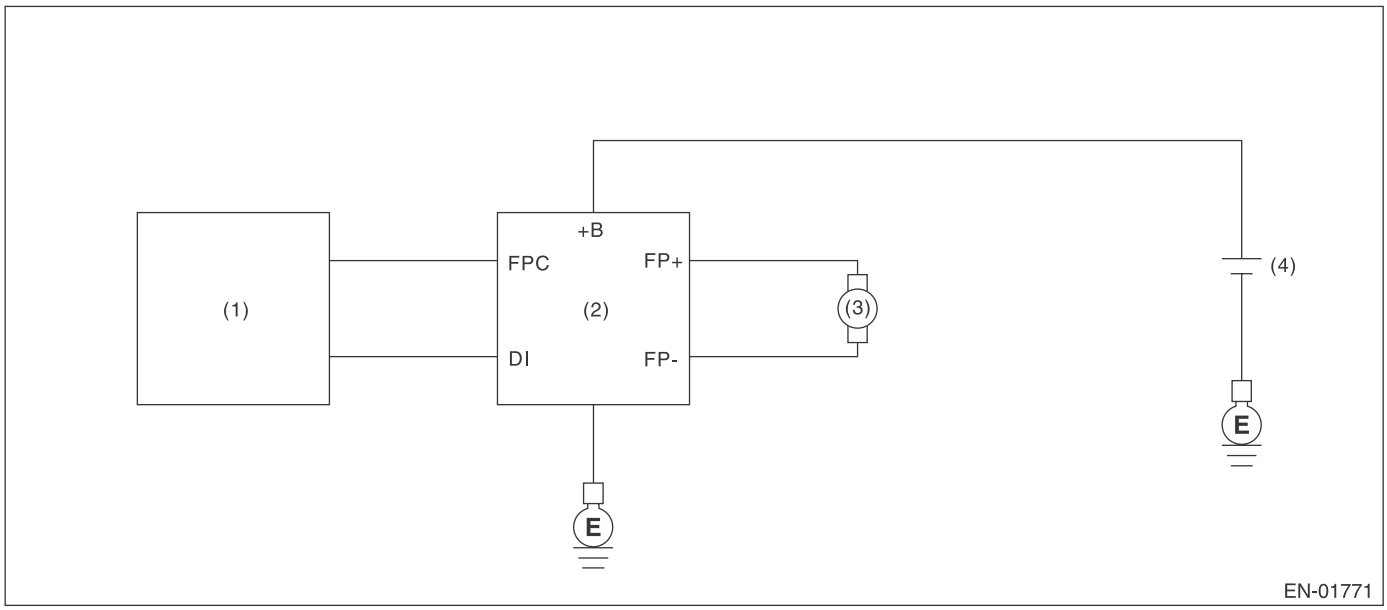

(1) Engine control module (ECM)
(2) Fuel pump control unit
(3) Fuel pump
(4) Battery

3. ENABLE CONDITION

Secondary Parameters	Enable Conditions
None	

4. GENERAL DRIVING CYCLE

Always perform the diagnosis continuously.

5. DIAGNOSTIC METHOD

• Abnormality Judgment

If the duration of time while the following conditions are met is longer than the time indicated, judge as NG.

Judgment Value

Malfunction Criteria	Threshold Value
Battery voltage	≥ 8 V
Elapsed time after starting the engine	≥ 180000 ms
Fuel pump control	ON
Fuel pump control unit output diagnosis signal	Low
Fuel level	≥ 10 ℓ (2.64 US gal, 2.2 Imp gal)

Time Needed for Diagnosis: 2500 ms
Malfunction Indicator Light Illumination: Illuminates when malfunction occurs in 2 continuous driving cycles.

• Normality Judgment

Judge as OK and clear the NG if the continuous time while the following conditions are established is more than the predetermined time.

Judgment Value

Malfunction Criteria	Threshold Value
Battery voltage	≥ 8 V
Elapsed time after starting the engine	≥ 180000 ms
Fuel pump control	ON
Fuel pump control unit output diagnosis signal	High
Fuel level	≥ 10 ℓ (2.64 US gal, 2.2 Imp gal)

Time Needed for Diagnosis: Less than 1 second

AU:DTC P0244 TURBO/SUPER CHARGER WASTEGATE SOLENOID “A” RANGE/PERFORMANCE

1. OUTLINE OF DIAGNOSIS

Detect the malfunction of wastegate control solenoid valve function.
Judge as NG when becoming high wastegate pressure.

2. COMPONENT DESCRIPTION

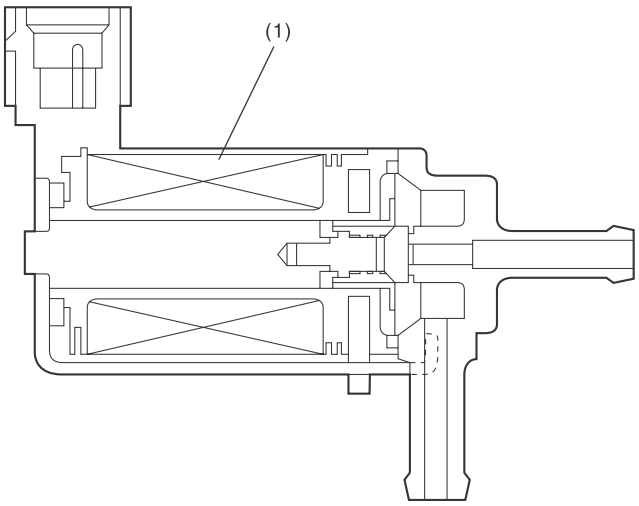

EN-01772

(1) Coil

3. ENABLE CONDITIONS

Secondary Parameters	Enable Conditions
None	

4. GENERAL DRIVING CYCLE

Always perform the diagnosis continuously.

5. DIAGNOSTIC METHOD

• Abnormality Judgment

If the duration of time while the following conditions are met is longer than the time indicated, judge as NG.

Judgment Value

Malfunction Criteria	Threshold Value
Intake manifold pressure	≥ Value from Map

Map

		Atmospheric pressure (kPa (mmHg, inHg))							
		64 (480, 18.9)	70.6 (530, 20.9)	77.3 (580, 22.8)	84 (630, 24.8)	90.6 (680, 26.8)	93.3 (700, 27.6)	96 (720, 28.3)	97.3 (730, 28.7)
Engine speed (rpm)	2000	194.6 (1460, 57.5)	194.6 (1460, 57.5)	194.6 (1460, 57.5)	194.6 (1460, 57.5)	194.6 (1460, 57.5)	194.6 (1460, 57.5)	194.6 (1460, 57.5)	194.6 (1460, 57.5)
	2400	197.3 (1480, 58.3)	197.3 (1480, 58.3)	197.3 (1480, 58.3)	197.3 (1480, 58.3)	197.3 (1480, 58.3)	197.3 (1480, 58.3)	197.3 (1480, 58.3)	197.3 (1480, 58.3)
	2800	197.3 (1480, 58.3)	197.3 (1480, 58.3)	197.3 (1480, 58.3)	197.3 (1480, 58.3)	197.3 (1480, 58.3)	197.3 (1480, 58.3)	197.3 (1480, 58.3)	197.3 (1480, 58.3)
	3200	193.9 (1454, 57.3)	194.7 (1461, 57.5)	195.6 (1467, 57.8)	196.4 (1474, 58)	197.3 (1480, 58.3)	197.3 (1480, 58.3)	197.3 (1480, 58.3)	197.3 (1480, 58.3)
	3600	188.3 (1413, 55.6)	190.9 (1432, 56.4)	193.5 (1451, 57.1)	196 (1471, 57.9)	198.6 (1490, 58.7)	198.6 (1490, 58.7)	198.6 (1490, 58.7)	198.6 (1490, 58.7)
	4000	182.6 (1370, 53.9)	187 (1403, 55.2)	191.3 (1435, 56.5)	195.6 (1468, 57.8)	200 (1500, 59.1)	200 (1500, 59.1)	200 (1500, 59.1)	200 (1500, 59.1)
	4400	172.2 (1292, 50.9)	178.3 (1338, 52.7)	184.4 (1383, 54.4)	190.4 (1429, 56.2)	196.5 (1474, 58)	198.2 (1487, 58.5)	200 (1500, 59.1)	200 (1500, 59.1)
	4800	161.8 (1214, 47.8)	169.6 (1273, 50.1)	177.4 (1331, 52.4)	185.2 (1390, 54.7)	193 (1448, 57)	196.5 (1474, 58)	200 (1500, 59.1)	200 (1500, 59.1)
	5200	155.2 (1164, 45.8)	164.9 (1237, 48.7)	174.7 (1311, 51.6)	184.4 (1384, 54.5)	194.2 (1457, 57.4)	198.6 (1490, 58.7)	203.1 (1523, 60)	203.9 (1530, 60.2)
	5600	149 (1118, 44)	160.8 (1206, 47.5)	172.6 (1295, 51)	184.4 (1383, 54.5)	196.2 (1472, 57.9)	200.7 (1506, 59.3)	205.2 (1540, 60.6)	207.9 (1560, 61.4)
	6000	138.3 (1038, 40.8)	151.7 (1138, 44.8)	165.1 (1239, 48.8)	178.5 (1339, 52.7)	191.9 (1440, 56.7)	196.4 (1473, 58)	200.8 (1507, 59.3)	205.3 (1540, 60.6)
	6400	137 (1028, 40.5)	150.3 (1128, 44.4)	163.5 (1227, 48.3)	176.8 (1326, 52.2)	190 (1426, 56.1)	194.5 (1459, 57.4)	198.9 (1492, 58.7)	203.3 (1525, 60)
kPa (mmHg, inHg)									

Time Needed for Diagnosis: 2000 ms
Malfunction Indicator Light Illumination: Illuminates as soon as a malfunction occurs.

- **Normality Judgment**

Judge as OK and clear the NG if the continuous time while the following conditions are established is more than the predetermined time.

Judgment Value

Malfunction Criteria	Threshold Value
Intake manifold pressure	< Value from Map – 20 kPa (150 mmHg, 5.9 inHg)

Time Needed for Diagnosis: Less than 1 second

AV:DTC P0245 TURBO/SUPER CHARGER WASTEGATE SOLENOID “A” LOW

1. OUTLINE OF DIAGNOSIS

Detect open or short circuit of the wastegate control solenoid valve.
Judge as NG when the terminal output voltage remains Low during outputting the duty signal.

2. COMPONENT DESCRIPTION

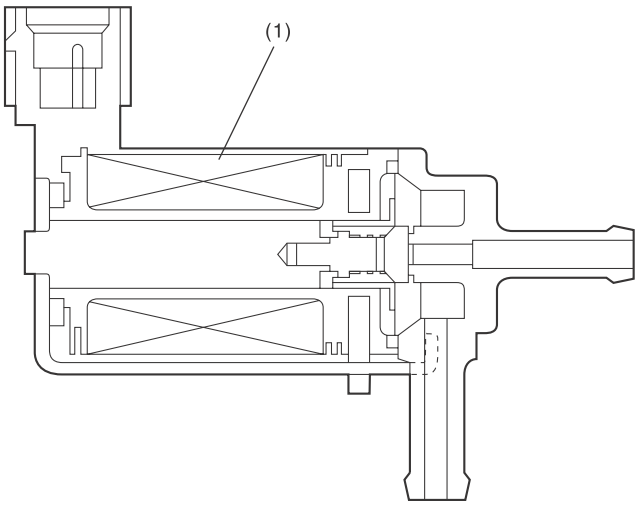

EN-01772

(1) Coil

3. ENABLE CONDITION

Secondary Parameters	Enable Conditions
Battery voltage	≥ 10.9 V
Elapsed time after starting the engine	≥ 1 second

4. GENERAL DRIVING CYCLE

Perform the diagnosis continuously after starting the engine.

5. DIAGNOSTIC METHOD

Abnormality Judgment

If the duration of time while the following conditions are met is longer than the time indicated, judge as NG.

Judgment Value

Malfunction Criteria	Threshold Value
Terminal output voltage	Low
Duty ratio of wastegate control	< 75%

Time Needed for Diagnosis: 4 ms × 640 ms
Malfunction Indicator Light Illumination: Illuminates as soon as a malfunction occurs.

Normality Judgment

Judge as OK and clear the NG if the continuous time while the following conditions are established is more than the predetermined time.

Judgment Value

Malfunction Criteria	Threshold Value
Terminal output voltage	High

Time Needed for Diagnosis: Less than 1 second

AW:DTC P0246 TURBO/SUPER CHARGER WASTEGATE SOLENOID "A" HIGH

1. OUTLINE OF DIAGNOSIS

Detect open or short circuit of the wastegate control solenoid valve.
Judge as NG when the terminal output voltage remains Low or High during outputting the duty signal.

2. COMPONENT DESCRIPTION

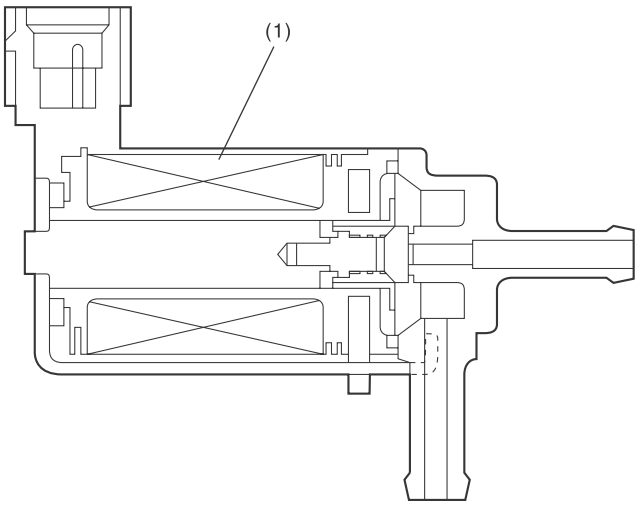

EN-01772

(1) Coil

3. ENABLE CONDITION

Secondary Parameters	Enable Conditions
Battery voltage	≥ 10.9 V
Elapsed time after starting the engine	≥ 1 second

4. GENERAL DRIVING CYCLE

Perform the diagnosis continuously after starting the engine.

5. DIAGNOSTIC METHOD

Abnormality Judgment

If the duration of time while the following conditions are met is longer than the time indicated, judge as NG.

Judgment Value

Malfunction Criteria	Threshold Value
Terminal output voltage	High
Duty ratio of wastegate control	≥ 25%

Time Needed for Diagnosis: 4 ms × 640 ms
Malfunction Indicator Light Illumination: Illuminates as soon as a malfunction occurs.

Normality Judgment

Judge as OK and clear the NG if the continuous time while the following conditions are established is more than the predetermined time.

Judgment Value

Malfunction Criteria	Threshold Value
Terminal output voltage	Low

Time Needed for Diagnosis: Less than 1 second

AX:DTC P0301 CYLINDER 1 MISFIRE DETECTED

1. OUTLINE OF DIAGNOSIS

Detect the presence of misfire occurrence. (Revolution fluctuation method)
Monitoring Misfire which influences exhaust deterioration (1.5 times of FTP) and catalyst damage is made obligatory by the law. Misfire affecting these two has two patterns below. :

- Intermittent misfire (The same cylinder misfires in random, or different cylinders misfire in random.): FTP 1.5 times misfire
- Every time misfire (The same cylinder misfires every time.): FTP 1.5 times misfire, Catalyst damage misfire

The following detecting methods are adopted for these detection.
1) Intermittent misfire: FTP 1.5 times misfire

- 180° Interval Difference Method (MT: 1,800 rpm or less, AT: None)
- 360° Interval Difference Method (whole range)
- 720° Interval Difference Method (3,000 rpm or more)

2) Misfire every time: FTP 1.5 times misfire, Catalyst damage misfire

- 360° Interval Difference Method

2. ENABLE CONDITION

Secondary Parameters	Enable Conditions
All secondary parameters enable conditions	≥ 1024 ms
Intake manifold pressure change at 180° CA	< Value of Map 1
Throttle position variation for 16 ms	< 14 °
Fuel shut-off function	Not in operation
Fuel level	≥ 10.5 ℓ (2.77 US gal, 2.31 Imp gal)
Vehicle dynamic control or AT torque control	Not in operation
Evaporative system leak check	Not in operation
Engine speed	550 rpm — 6700 rpm
Intake manifold pressure	≥ Value from Map 2
Battery voltage	≥ 8 V
Fuel parameter determination	Not extremely low volatility
Elapsed time after starting the engine	≥ 0 ms
Engine speed variation for 32 ms	< 1000 rpm

Map 1

rpm	700	1000	1500	2000	2500	3000	3500	4000	4500	5000	5500	6000	6500	6700
kPa (mmHg, inHg)	13.3 (100, 3.9)	13.3 (100, 3.9)	13.3 (100, 3.9)	13.3 (100, 3.9)	13.3 (100, 3.9)	13.3 (100, 3.9)	13.3 (100, 3.9)	13.3 (100, 3.9)	13.3 (100, 3.9)	13.3 (100, 3.9)	13.3 (100, 3.9)	13.3 (100, 3.9)	13.3 (100, 3.9)	13.3 (100, 3.9)

Map 2

- Tumble generator valve open

Vehicle speed < 64 km/h (39.8 MPH)

rpm	700	1000	1500	2000	2500	3000	3500	4000	4500	5000	5500	6000	6500	6700
kPa (mmHg, inHg)	28.8 (216, 8.5)	24.9 (187, 7.4)	21.1 (158, 6.2)	21.7 (163, 6.4)	22.3 (167, 6.6)	23.1 (173, 6.8)	28.5 (214, 8.4)	28.4 (213, 8.4)	31.6 (237, 9.3)	32.5 (244, 9.6)	37.1 (278, 10.9)	41.9 (314, 12.4)	46.9 (352, 13.9)	51.1 (383, 15.1)

Vehicle speed ≥ 68 km/h (42.3 MPH)

rpm	700	1000	1500	2000	2500	3000	3500	4000	4500	5000	5500	6000	6500	6700
kPa (mmHg, inHg)	25.1 (188, 7.4)	24.8 (186, 7.3)	31.6 (237, 9.3)	33.1 (248, 9.8)	32.1 (241, 9.5)	31.6 (237, 9.3)	36.7 (275, 10.8)	35.1 (263, 10.4)	38.3 (287, 11.3)	39.2 (294, 11.6)	43.7 (328, 12.9)	48.5 (364, 14.3)	53.6 (402, 15.8)	54.7 (410, 16.1)

- Tumble generator valve closed

Vehicle speed < 64 km/h (39.8 MPH)

rpm	700	1000	1500	2000	2500	3000	3500	4000	4500	5000	5500	6000	6500	6700
kPa (mmHg, inHg)	28.8 (216, 8.5)	24.9 (187, 7.4)	21.1 (158, 6.2)	21.7 (163, 6.4)	22.3 (167, 6.6)	23.1 (173, 6.8)	28.5 (214, 8.4)	28.4 (213, 8.4)	31.6 (237, 9.3)	32.5 (244, 9.6)	37.1 (278, 10.9)	41.9 (314, 12.4)	46.9 (352, 13.9)	51.1 (383, 15.1)

Vehicle speed ≥ 68 km/h (42.3 MPH)

rpm	700	1000	1500	2000	2500	3000	3500	4000	4500	5000	5500	6000	6500	6700
kPa (mmHg, inHg)	25.1 (188, 7.4)	24.8 (186, 7.3)	31.6 (237, 9.3)	33.1 (248, 9.8)	32.1 (241, 9.5)	31.6 (237, 9.3)	36.7 (275, 10.8)	35.1 (263, 10.4)	38.3 (287, 11.3)	39.2 (294, 11.6)	43.7 (328, 12.9)	48.5 (364, 14.3)	53.6 (402, 15.8)	54.7 (410, 16.1)

3. GENERAL DRIVING CYCLE

- If conditions are met, it is possible to detect the misfires from idling to high engine speed. However, to avoid excessive load or harm to the engine, perform diagnosis at idle.
- Perform the diagnosis continuously.

4. DIAGNOSTIC METHOD

When a misfire occurs, the engine speed will decreased and the crankshaft position speed will change. Calculate the interval difference value (diagnostic value) from crankshaft position speed by the following formula, and judge whether a misfire is occurring or not comparing the calculated result with judgment value. Counting the number of misfires. If the misfire ratio is higher during 1000 revs. or 200 revs., Judge corresponding cylinders as NG.

Diagnostic value calculation (Calculate from angle speed) →	Misfire detection every single ignition (Compare diagnostic value with judgment value) →	NG judgment (Misfire occurrence judgment required by the law) (Compare number of misfire with judgment)
	• 180° Interval Difference Method • 360° Interval Difference Method • 720° Interval Difference Method	• FTP 1.5 times misfire NG judgment • Catalyst damage misfire NG judgment

As shown in the following figure, pick a cylinder as the standard and name it omg 0. And the former crankshaft position speed is named omg 1, the second former crankshaft position speed is named omg 2, the third is named omg 3, etc.

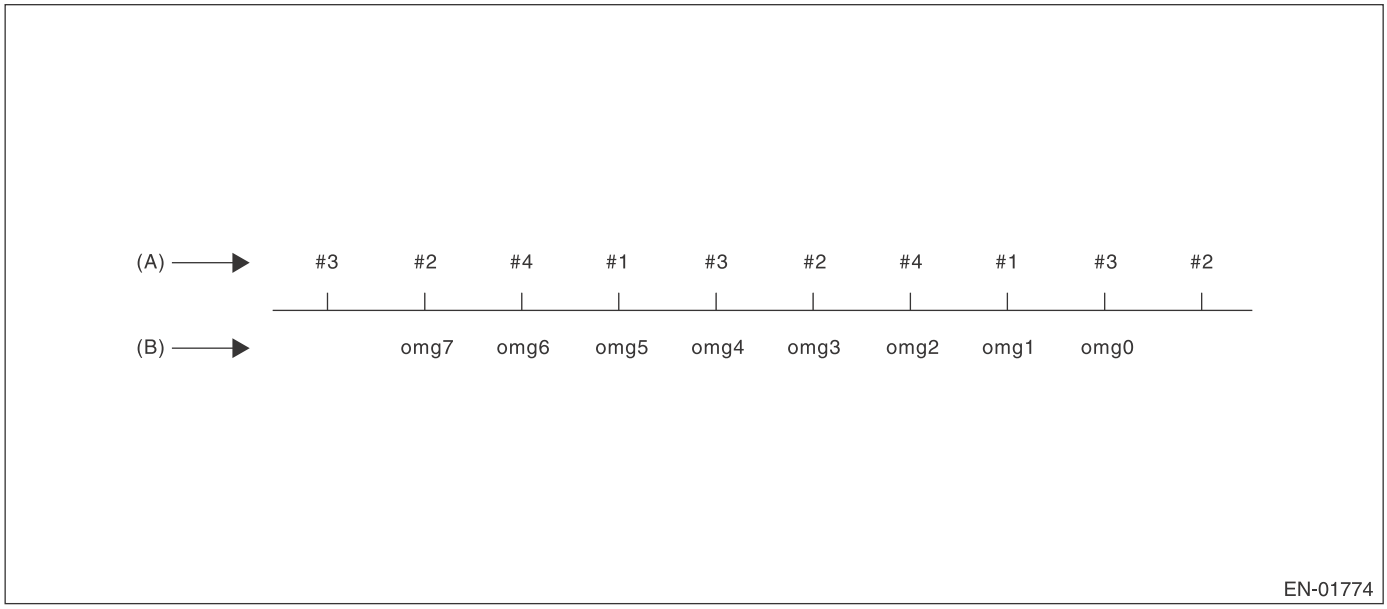

(A) Ignition order (B) Crankshaft position speed

180° Interval Difference Method

Diagnostic value	domg 180 = (omg 1 – omg 0) – (omg 5 – omg 1)/4
Judge as a misfire in the following cases. • domg 180 > judgment value of positive side • domg 180 ≤ judgment value of negative side (Judgment value before 180° CA)	

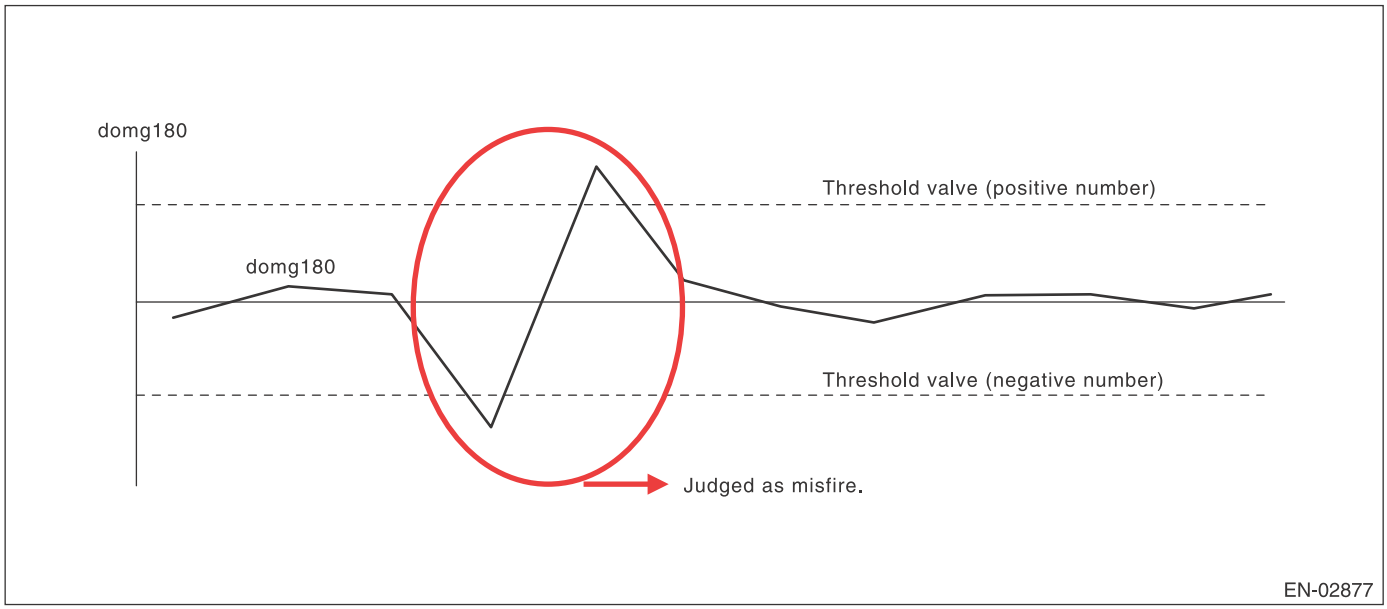

360° Interval Difference Method

Diagnostic value	domg 360 = (omg 1 – omg 0) – (omg 3 – omg 2)
Misfire judgment	domg 360 > Judgment value → Judge as misfire

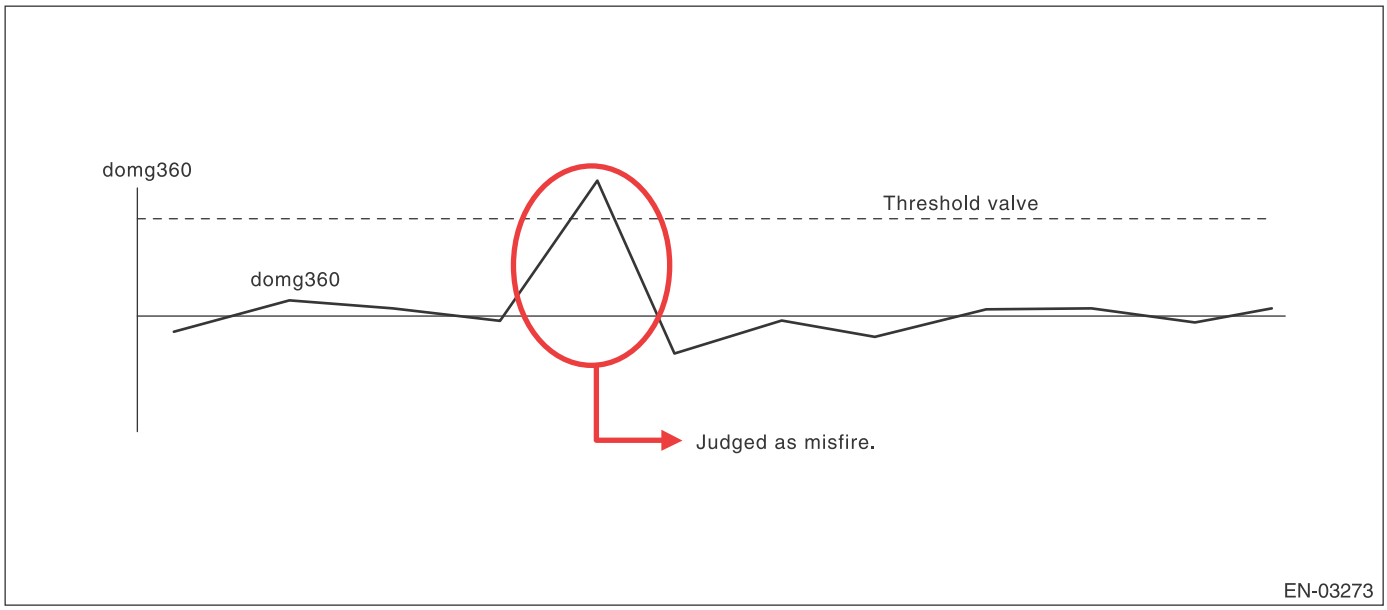

720° Interval Difference Method

Diagnostic value	domg 720 = (omg 1 – omg 0) – (omg 5 – omg 4)
Misfire judgment	domg 720 > Judgment value → Judge as misfire

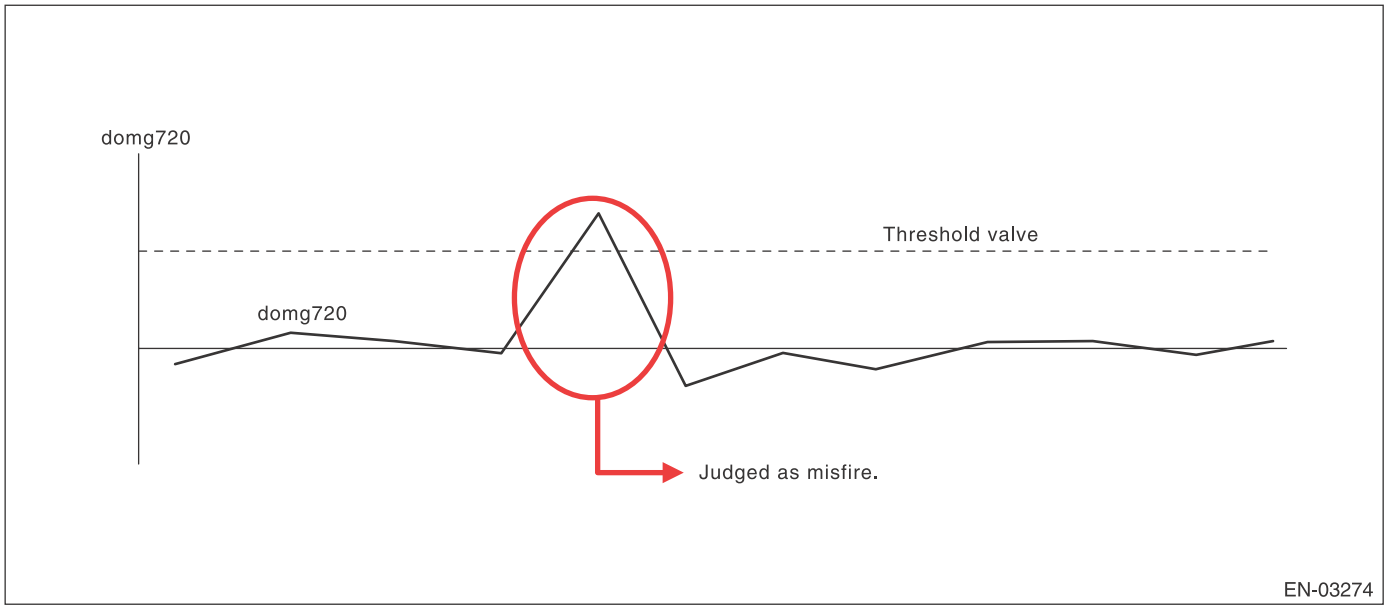

- **FTP 1.5 times misfire (Misfire occurrence level which influences exhaust gas)**
- **Abnormality Judgment**

Judgment Value (Judge that malfunction occurs when the misfire ratio is high in 1000 engine revs.)

Malfunction Criteria	Threshold Value
FTP emission judgment value	≥ 30 × 100/2000% in 1000 revs.

Time Needed for Diagnosis: 1000 engine revs.
Malfunction Indicator Light Illumination: Illuminates when malfunction occurs in 2 continuous driving cycles.

- **Normality Judgment**

Judgment Value

Malfunction Criteria	Threshold Value
FTP emission judgment value	< 30 × 100/2000% in 1000 revs.

Time Needed for Diagnosis: 1000 engine revs.

- **Catalyst damage misfire (Misfire occurrence level damaging catalyst)**
- **Abnormality Judgment**

Judgment Value

Malfunction Criteria	Threshold Value
Catalyst damage misfire judgment value	≥ Value of Map 3

Map 3

		Intake air (g(oz)/rev)									
		0.2 (0.01)	0.4 (0.01)	0.6 (0.02)	0.8 (0.03)	1 (0.04)	1.2 (0.04)	1.4 (0.05)	1.6 (0.06)	1.8 (0.06)	2 (0.07)
Engine speed (rpm)	700	126	109	99	90	85	77	77	77	77	77
	1000	126	109	97	88	78	72	72	72	72	72
	1500	119	100	87	77	72	72	72	61	61	61
	2000	109	77	77	62	49	37	34	31	27	20
	2500	99	74	48	38	33	31	29	27	26	20
	3000	92	74	49	33	31	31	27	26	24	20
	3500	83	63	37	23	20	20	20	20	20	20
	4000	59	52	34	23	20	20	20	20	20	20
	4500	51	47	29	21	20	20	20	20	20	20
	5000	47	47	29	20	20	20	20	20	20	20
	5500	46	46	28	20	20	20	20	20	20	20
	6000	44	44	27	20	20	20	20	20	20	20
	6500	43	43	26	20	20	20	20	20	20	20
	6700	43	43	26	20	20	20	20	20	20	20

Time Needed for Diagnosis: 200 engine revs.
Malfunction Indicator Light Illumination: Illuminates as soon as a malfunction occurs.

- **Normality Judgment**

Judgment Value

Malfunction Criteria	Threshold Value
Catalyst damage misfire judgment value	< Value of Map 3

Time Needed for Diagnosis: 200 engine revs.

AY:DTC P0302 CYLINDER 2 MISFIRE DETECTED

1. OUTLINE OF DIAGNOSIS

NOTE:
For the detection standard, refer to DTC P0301. <Ref. to GD(H4DOTC)-92, DTC P0301 CYLINDER 1 MISFIRE DETECTED, Diagnostic Trouble Code (DTC) Detecting Criteria.>

AZ:DTC P0303 CYLINDER 3 MISFIRE DETECTED

1. OUTLINE OF DIAGNOSIS

NOTE:
For the detection standard, refer to DTC P0301. <Ref. to GD(H4DOTC)-92, DTC P0301 CYLINDER 1 MISFIRE DETECTED, Diagnostic Trouble Code (DTC) Detecting Criteria.>

BA:DTC P0304 CYLINDER 4 MISFIRE DETECTED

1. OUTLINE OF DIAGNOSIS

NOTE:
For the detection standard, refer to DTC P0301. <Ref. to GD(H4DOTC)-92, DTC P0301 CYLINDER 1 MISFIRE DETECTED, Diagnostic Trouble Code (DTC) Detecting Criteria.>

BB:DTC P0327 KNOCK SENSOR 1 CIRCUIT LOW (BANK 1 OR SINGLE SENSOR)

1. OUTLINE OF DIAGNOSIS

Detect the open or short circuit of knock sensor.
Judge as NG if out of specification.

2. COMPONENT DESCRIPTION

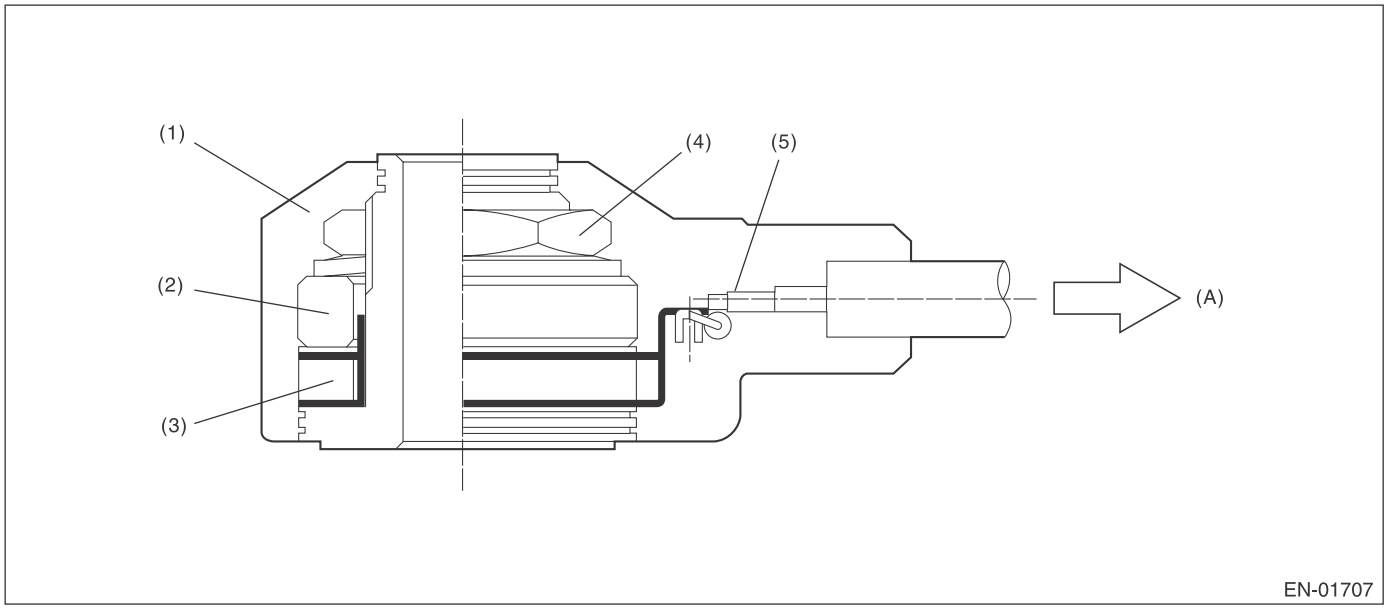

(A) To knock sensor harness

(1) Case
(2) Weight
(3) Piezoelectric element
(4) Nut
(5) Resistance

3. ENABLE CONDITION

Secondary Parameters	Enable Conditions
None	

4. GENERAL DRIVING CYCLE

Always perform the diagnosis continuously.

5. DIAGNOSTIC METHOD

- **Abnormality Judgment**

If the duration of time while the following conditions are met is longer than the time indicated, judge as NG.

Judgment Value

Malfunction Criteria	Threshold Value
Output voltage	< 0.243 V

Time Needed for Diagnosis: 1000 ms
Malfunction Indicator Light Illumination: Illuminates as soon as a malfunction occurs.

- **Normality Judgment**

Judge as OK and clear the NG if the continuous time while the following conditions are established is more than the predetermined time.

Judgment Value

Malfunction Criteria	Threshold Value
Output voltage	≥ 0.243 V

Time Needed for Diagnosis: Less than 1 second

BC:DTC P0328 KNOCK SENSOR 1 CIRCUIT HIGH (BANK 1 OR SINGLE SENSOR)

1. OUTLINE OF DIAGNOSIS

Detect the open or short circuit of knock sensor.
Judge as NG if out of specification.

2. COMPONENT DESCRIPTION

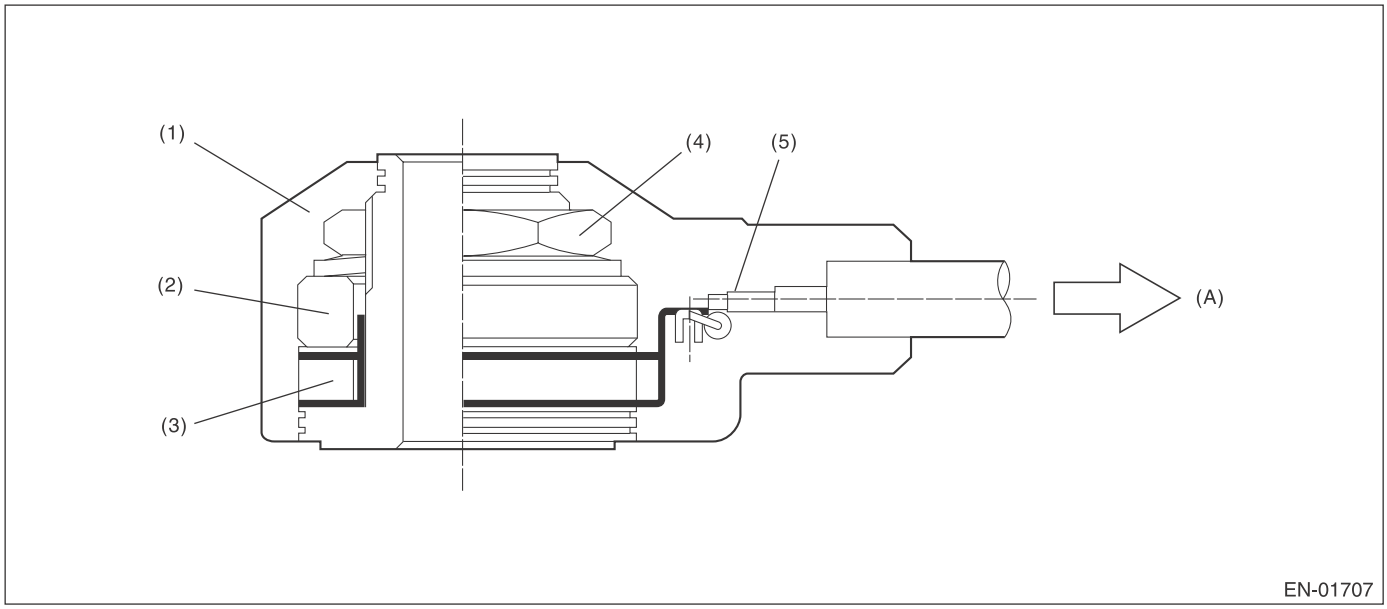

(A) To knock sensor harness

(1) Case
(2) Weight
(3) Piezoelectric element
(4) Nut
(5) Resistance

3. ENABLE CONDITION

Secondary Parameters	Enable Conditions
None	

4. GENERAL DRIVING CYCLE

Always perform the diagnosis continuously.

5. DIAGNOSTIC METHOD

- **Abnormality Judgment**

If the duration of time while the following conditions are met is longer than the time indicated, judge as NG.

Judgment Value

Malfunction Criteria	Threshold Value
Output voltage	≥ 4.709 V

Time Needed for Diagnosis: 1000 ms
Malfunction Indicator Light Illumination: Illuminates as soon as a malfunction occurs.

- **Normality Judgment**

Judge as OK and clear the NG if the continuous time while the following conditions are established is more than the predetermined time.

Judgment Value

Malfunction Criteria	Threshold Value
Output voltage	< 4.709 V

Time Needed for Diagnosis: Less than 1 second

BD:DTC P0335 CRANKSHAFT POSITION SENSOR “A” CIRCUIT

1. OUTLINE OF DIAGNOSIS

Detect the open or short circuit of the crankshaft position sensor.
Judge as NG when the crank signal is not input even though the starter was rotated.

2. COMPONENT DESCRIPTION

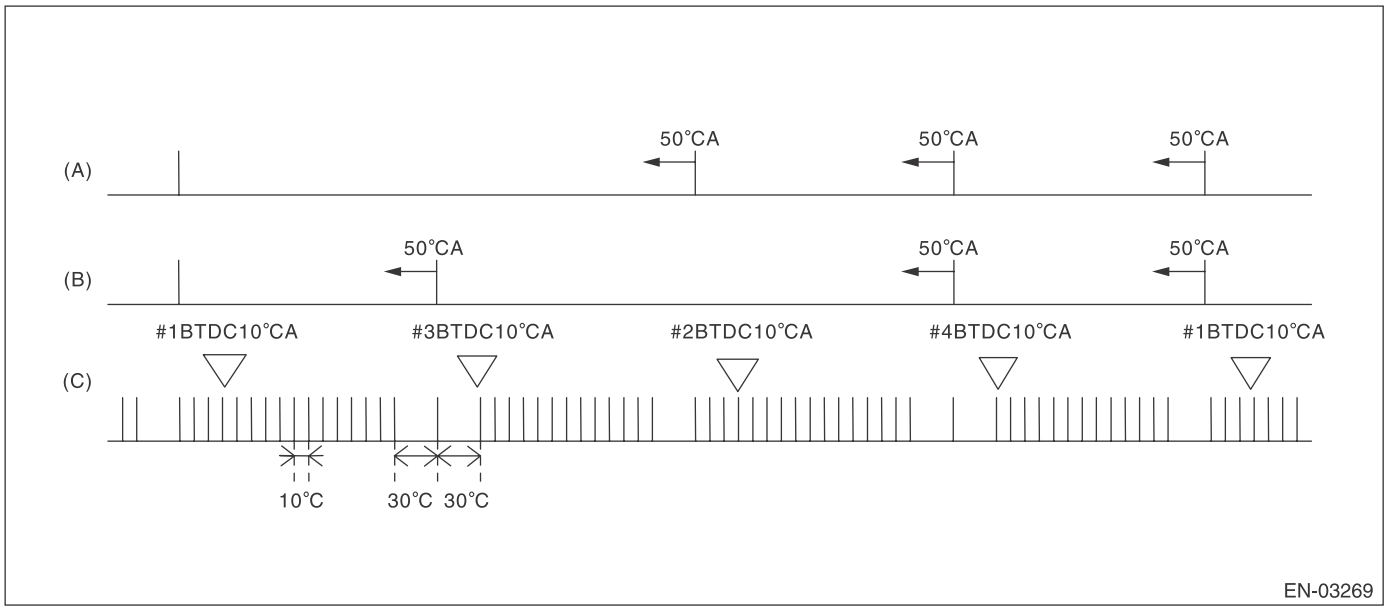

(A) Camshaft signal (RH) (B) Camshaft signal (LH) (C) Crankshaft signal

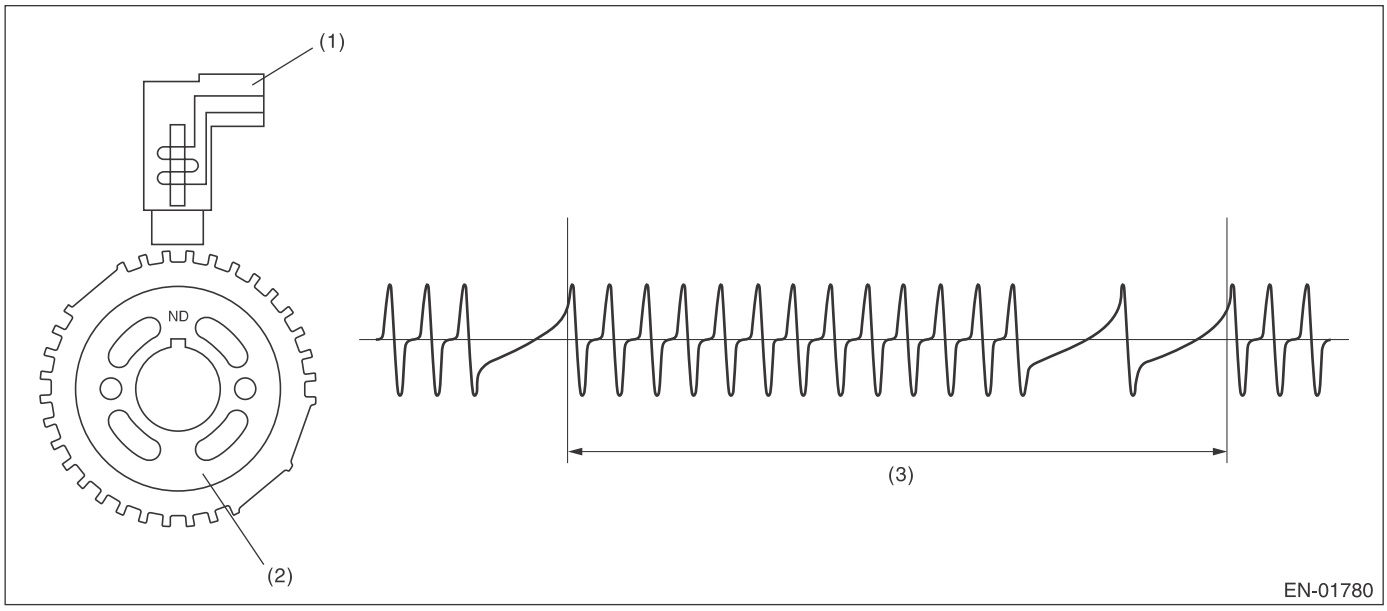

(1) Crankshaft position sensor (2) Crank sprocket (3) Crankshaft half-turn

3. ENABLE CONDITION

Secondary Parameters	Enable Conditions
None	

4. GENERAL DRIVING CYCLE

Always perform the diagnosis continuously.

5. DIAGNOSTIC METHOD

• Abnormality Judgment

If the duration of time while the following conditions are met is longer than the time indicated, judge as NG.

Judgment Value

Malfunction Criteria	Threshold Value
Starter switch	ON
Crankshaft position sensor signal	Not detected
Battery voltage	≥ 8 V

Time Needed for Diagnosis: 3000 ms
Malfunction Indicator Light Illumination: Illuminates as soon as a malfunction occurs.

• Normality Judgment

Judge as OK and clear the NG if the continuous time while the following conditions are established is more than the predetermined time.

Judgment Value

Malfunction Criteria	Threshold Value
Crankshaft position sensor signal	Input exists
Battery voltage	≥ 8 V

Time Needed for Diagnosis: Less than 1 second

BE:DTC P0336 CRANKSHAFT POSITION SENSOR “A” CIRCUIT RANGE/PERFORMANCE

1. OUTLINE OF DIAGNOSIS

Detect for faults in crankshaft position sensor output properties.
Judge as NG when there is a problem in the number of crankshaft signals for every revolution.

2. COMPONENT DESCRIPTION

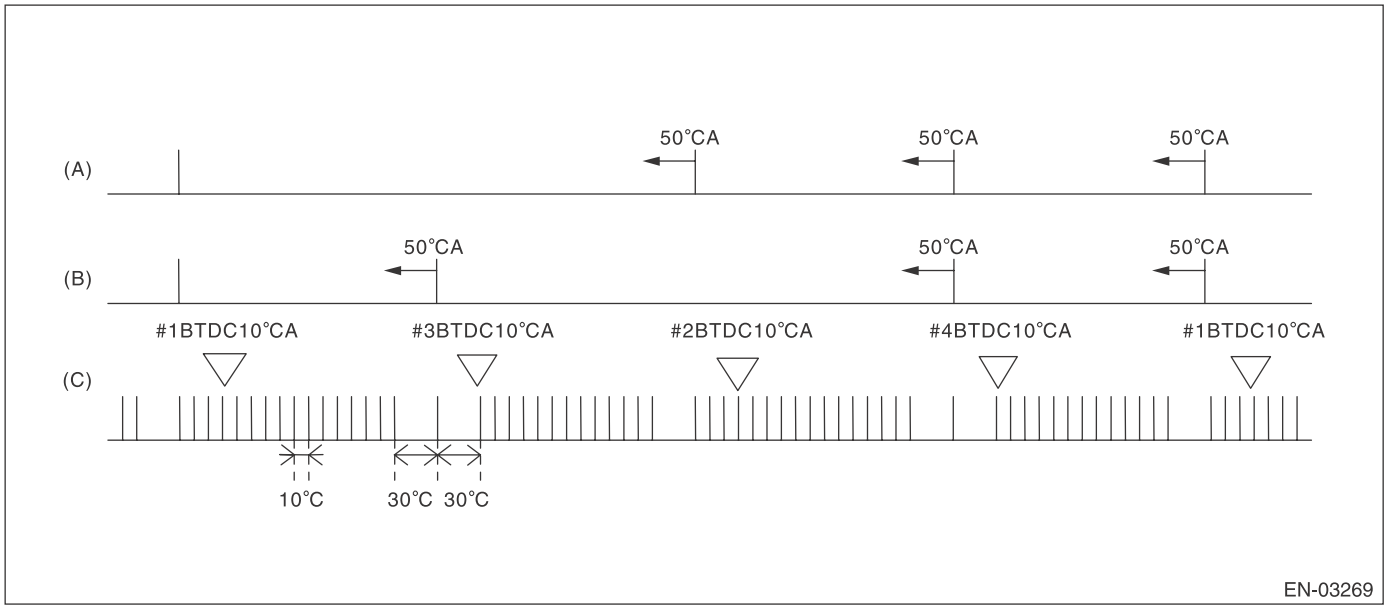

(A) Camshaft signal (RH) (B) Camshaft signal (LH) (C) Crankshaft signal

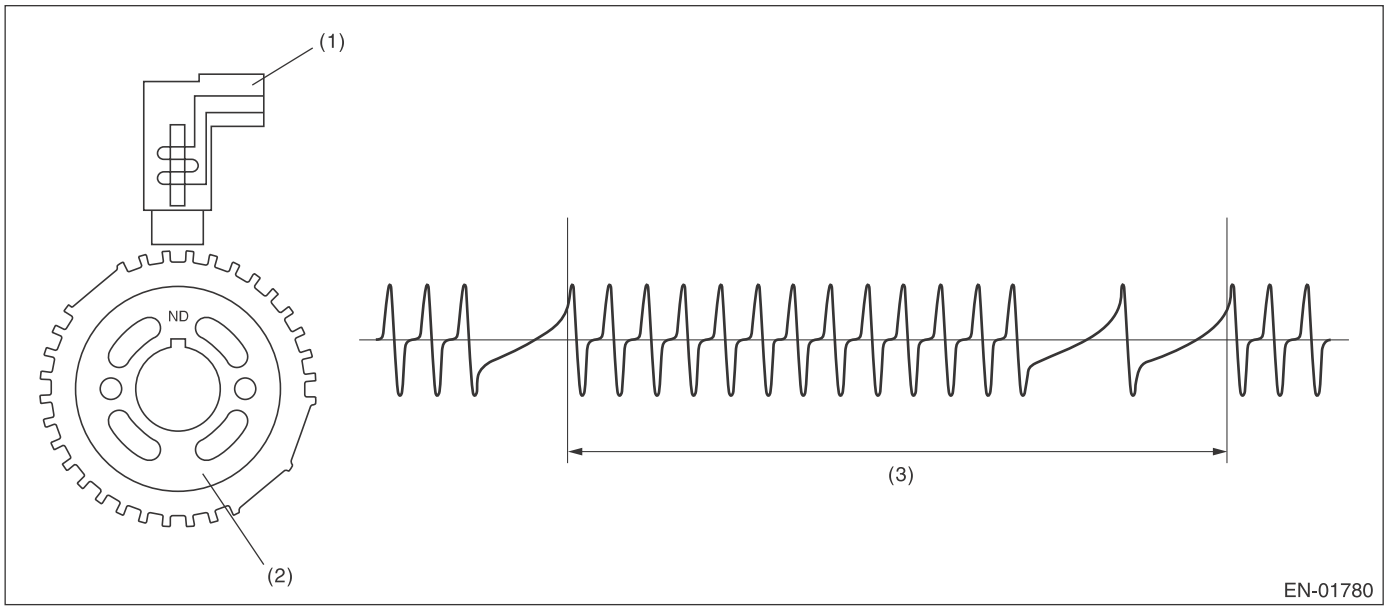

(1) Crankshaft position sensor (2) Crank sprocket (3) Crankshaft half-turn

3. ENABLE CONDITION

Secondary Parameters	Enable Conditions
Battery voltage	≥ 8 V
Engine speed	< 3000 rpm

4. GENERAL DRIVING CYCLE

Perform the diagnosis continuously under 3000 rpm engine speed.

5. DIAGNOSTIC METHOD

- **Abnormality Judgment**

Judge as NG when the following conditions are established.

Judgment Value

Malfunction Criteria	Threshold Value
Cylinder number identification	Completed
Amount of crank sensor signal during 1 rev.	Not = 30

Time Needed for Diagnosis: 10 engine revs.
Malfunction Indicator Light Illumination: Illuminates when malfunction occurs in 2 continuous driving cycles.

- **Normality Judgment**

Judge as OK and clear the NG if the continuous time while the following conditions are established is more than the predetermined time.

Judgment Value

Malfunction Criteria	Threshold Value
Cylinder number identification	Completed
Amount of crank sensor signal during 1 rev.	= 30

Time Needed for Diagnosis: Less than 1 second

BF:DTC P0340 CAMSHAFT POSITION SENSOR “A” CIRCUIT (BANK 1 OR SINGLE SENSOR)

1. OUTLINE OF DIAGNOSIS

Detect the open or short circuit of the camshaft position sensor.
Judge as NG when the number of camshaft signals remains abnormal.

2. COMPONENT DESCRIPTION

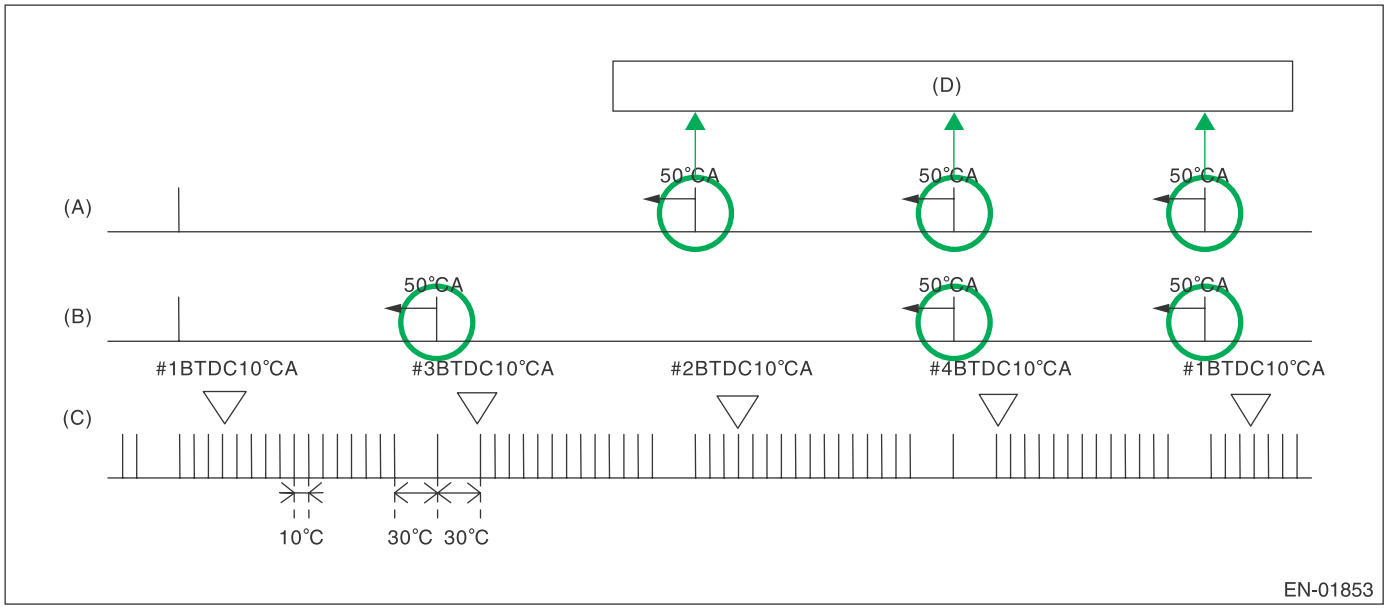

(A) Camshaft signal (RH)
(B) Camshaft signal (LH)
(C) Crankshaft signal
(D) Number of camshaft position signals = When normal, there will be 3 cam signals for every two engine revolutions.

3. ENABLE CONDITION

Secondary Parameters	Enable Conditions
Battery voltage	≥ 8 V

4. GENERAL DRIVING CYCLE

Always perform the diagnosis continuously.

5. DIAGNOSTIC METHOD

• Abnormality Judgment 1

Judge as NG when the status where the number of camshaft position sensor signal in two engine revolutions is less than 3 time(s).

Judgment Value

Malfunction Criteria	Threshold Value
Amount of camshaft sensor signal during 2 revs.	< 3 time(s)

Time Needed for Diagnosis: Engine two revolutions × 50 time(s)
Malfunction Indicator Light Illumination: Illuminates as soon as a malfunction occurs.

• Normality Judgment 1

Judge as OK and clear the NG when the malfunction criteria below are met.

Judgment Value

Malfunction Criteria	Threshold Value
Camshaft position sensor signal	≥ 3 time(s)

Time Needed for Diagnosis: Two engine revolutions

• Abnormality Judgment 2

If the duration of time while the following conditions are met is longer than the time indicated, judge as NG.

Judgment Value

Malfunction Criteria	Threshold Value
Starter	ON
Camshaft position sensor signal	No input

Time Needed for Diagnosis: 3000 ms

• Normality Judgment 2

Judge as OK and clear the NG if the continuous time while the following conditions are established is more than the predetermined time.

Judgment Value

Malfunction Criteria	Threshold Value
Camshaft position sensor signal	Input exists

Time Needed for Diagnosis: Less than 1 second

BG:DTC P0345 CAMSHAFT POSITION SENSOR “A” CIRCUIT (BANK 2)

1. OUTLINE OF DIAGNOSIS

NOTE:
For the detection standard, refer to DTC P0340. <Ref. to GD(H4DOTC)-106, DTC P0340 CAMSHAFT POSITION SENSOR “A” CIRCUIT (BANK 1 OR SINGLE SENSOR), Diagnostic Trouble Code (DTC) Detecting Criteria.>

BH:DTC P0365 CAMSHAFT POSITION SENSOR “B” CIRCUIT (BANK 1)

1. OUTLINE OF DIAGNOSIS

Detect the open or short circuit of the camshaft position sensor.
Judge as NG when the number of camshaft signals remains abnormal.

2. COMPONENT DESCRIPTION

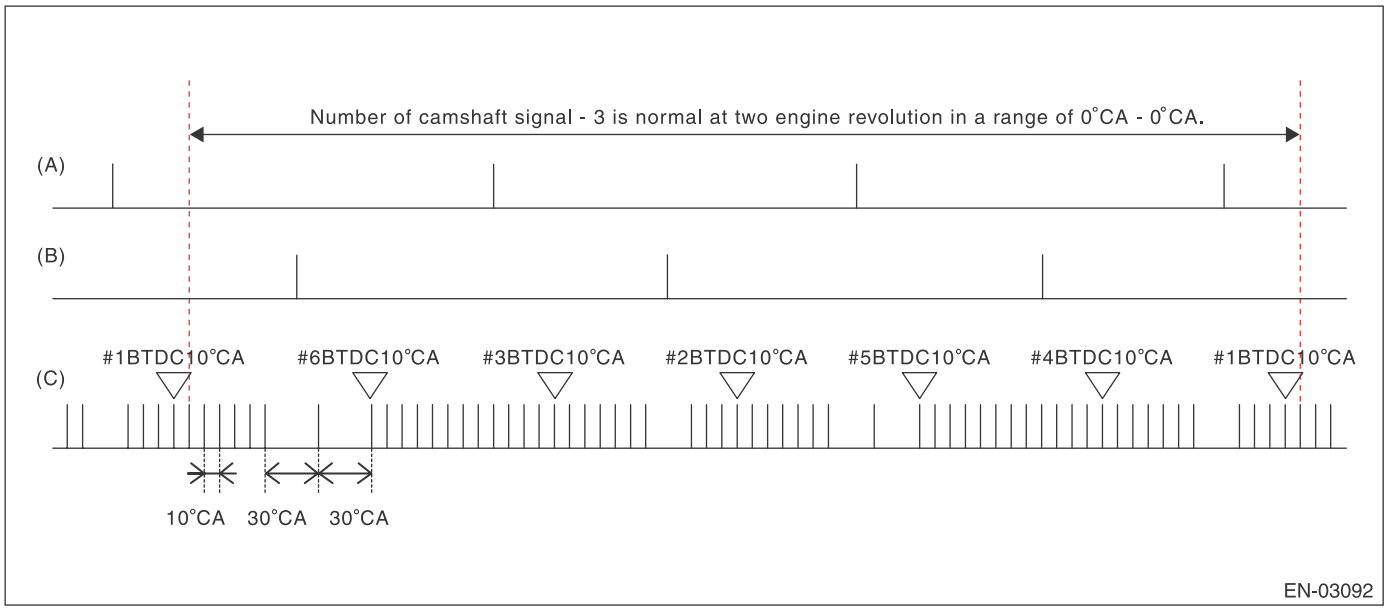

(A) Cam signal (RH)
(B) Cam signal (LH)
(C) Crankshaft signal

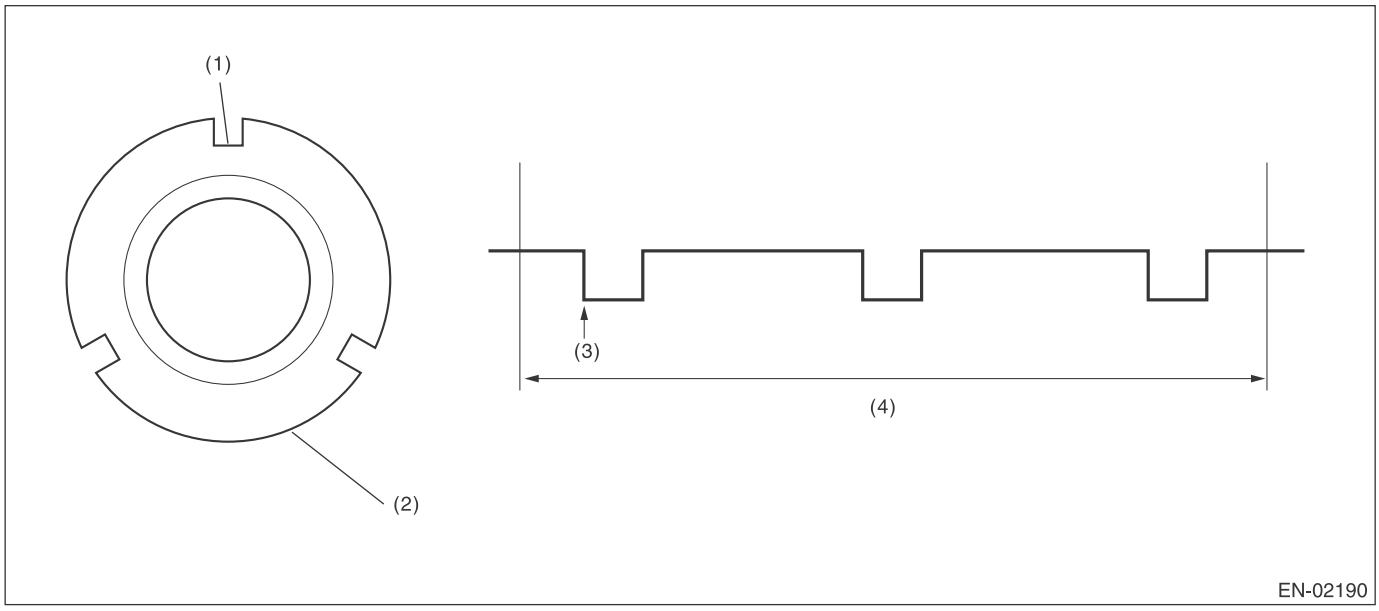

(1) Throttle
(2) Camshaft plate
(3) Detecting point
(4) Camshaft one revolution (engine two revolutions)

3. ENABLE CONDITIONS

Secondary Parameters	Enable Conditions
Battery voltage	≥ 8 V

4. GENERAL DRIVING CYCLE

Always perform the diagnosis continuously.

5. DIAGNOSTIC METHOD

- **Abnormality Judgment**

Judge as NG when the status where the number of camshaft position sensor signal in two engine revolutions is less than 2 time(s).

Judgment Value

Malfunction Criteria	Threshold Value
Amount of camshaft sensor signal during 2 revs.	< 2 time(s)

Time Needed for Diagnosis: Engine two revolutions × 50
Malfunction Indicator Light Illumination: Illuminates as soon as a malfunction occurs.

- **Normality Judgment**

Judge as OK and clear the NG when the malfunction criteria below are met.

Judgment Value

Malfunction Criteria	Threshold Value
Camshaft position sensor signal	≥ 2 time(s)

Time Needed for Diagnosis: Two engine revolutions

BI: DTC P0390 CAMSHAFT POSITION SENSOR “B” CIRCUIT (BANK 2)

1. OUTLINE OF DIAGNOSIS

NOTE:
For the detection standard, refer to DTC P0365. <Ref. to GD(H4DOTC)-108, DTC P0365 CAMSHAFT POSITION SENSOR “B” CIRCUIT (BANK 1), Diagnostic Trouble Code (DTC) Detecting Criteria.>

BJ:DTC P0420 CATALYST SYSTEM EFFICIENCY BELOW THRESHOLD (BANK 1)

1. OUTLINE OF DIAGNOSIS

Detect the deterioration of the catalyst function.
Though the front oxygen sensor output would change slowly with a new catalyst, the sensor output with a deteriorated catalyst becomes high and the inversion time is shortened.
For this reason, the catalyst diagnosis is carried out by monitoring the front oxygen sensor output and comparing it with the front oxygen (A/F) sensor output.

2. COMPONENT DESCRIPTION

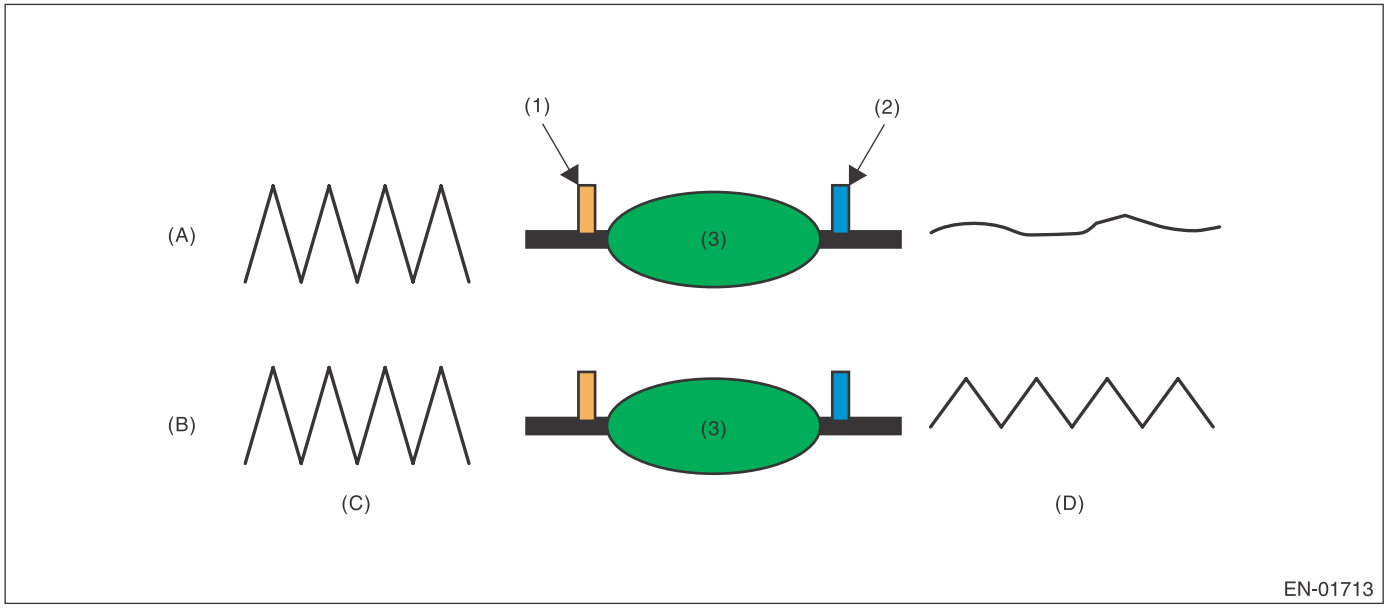

(A)	Normal	(B)	Deterioration	(C)	Output waveform from the front oxygen (A/F) sensor
(D)	Output waveform from the front oxygen sensor				
(1)	Front oxygen (A/F) sensor	(2)	Front oxygen sensor	(3)	Catalytic converter

3. ENABLE CONDITION

Secondary Parameters	Enable Conditions
Battery voltage	≥ 10.9 V
Atmospheric pressure	≥ 75 kPa (563 mmHg, 22.2 inHg)
Engine coolant temperature	≥ 72 °C (161.6 °F)
Estimated catalyst temperature	≥ 540 °C (1004 °F)
Misfire detection every 200 rotations	< 5 time(s)
Learning value of evaporation gas density	< 0.2
Sub feedback	In operation
Evaporative system diagnosis	Not in operation
Time of difference (< 0.10) between actual lambda and target lambda	≥ 1000 ms
Vehicle speed	> 60 km/h (37.3 MPH)
Amount of intake air	≥ 6.5 g/s (0.23 oz/s) and < 50 g/s (1.76 oz/s)
Engine load change every 0.5 engine revs.	< 0.02 g/rev (0 oz/rev)
Rear oxygen output change from 660 mV or less to 660 mV or more	Experienced after fuel cut
Elapsed time after starting the engine	≥ 230 second
Purge execution calculated time	≥ 5 s

4. GENERAL DRIVING CYCLE

Perform the diagnosis only once at a constant speed of 60 km/h (37.3 MPH) or higher.

5. DIAGNOSTIC METHOD

After the enable conditions have been established, calculate the front oxygen (A/F) sensor lambda value deviation cumulative value (Σ |(sglmd$_n$ – sglmd$_{n-1}$)|), and rear oxygen sensor output voltage deviation cumulative value (Σ |(ro2sad$_n$ – ro2sad$_{n-1}$)|) in every 32 × 4 times. If the front oxygen (A/F) sensor lambda value deviation cumulative value (Σ |(sglmd$_n$ – sglmd$_{n-1}$)|) is the predetermined value or more, calculate the judgment value.

- **Abnormality Judgment**

If the duration of time while the following conditions are met is within the time indicated, judge as NG.

Judgment Value

Malfunction Criteria	Threshold Value
Σ |(ro2sad$_n$ – ro2sad$_{n-1}$)| / Σ |(sglmd$_n$ – sglmd$_{n-1}$)|	> 9.03

Time Needed for Diagnosis: 30 — 55 seconds
Malfunction Indicator Light Illumination: Illuminates when malfunction occurs in 2 continuous driving cycles.

- **Normality Judgment**

Judge as OK and clear the NG if the continuous time while the following conditions are established is within the predetermined time.

Judgment Value

Malfunction Criteria	Threshold Value
Σ |(ro2sad$_n$ – ro2sad$_{n-1}$)| / Σ |(sglmd$_n$ – sglmd$_{n-1}$)|	≤ 9.03

Time Needed for Diagnosis: 30 — 55 seconds

BK:DTC P0442 EVAPORATIVE EMISSION CONTROL SYSTEM LEAK DETECTED (SMALL LEAK)

1. OUTLINE OF DIAGNOSIS

Check if there is a leakage in fuel system or not, and perform the function diagnosis of valve.

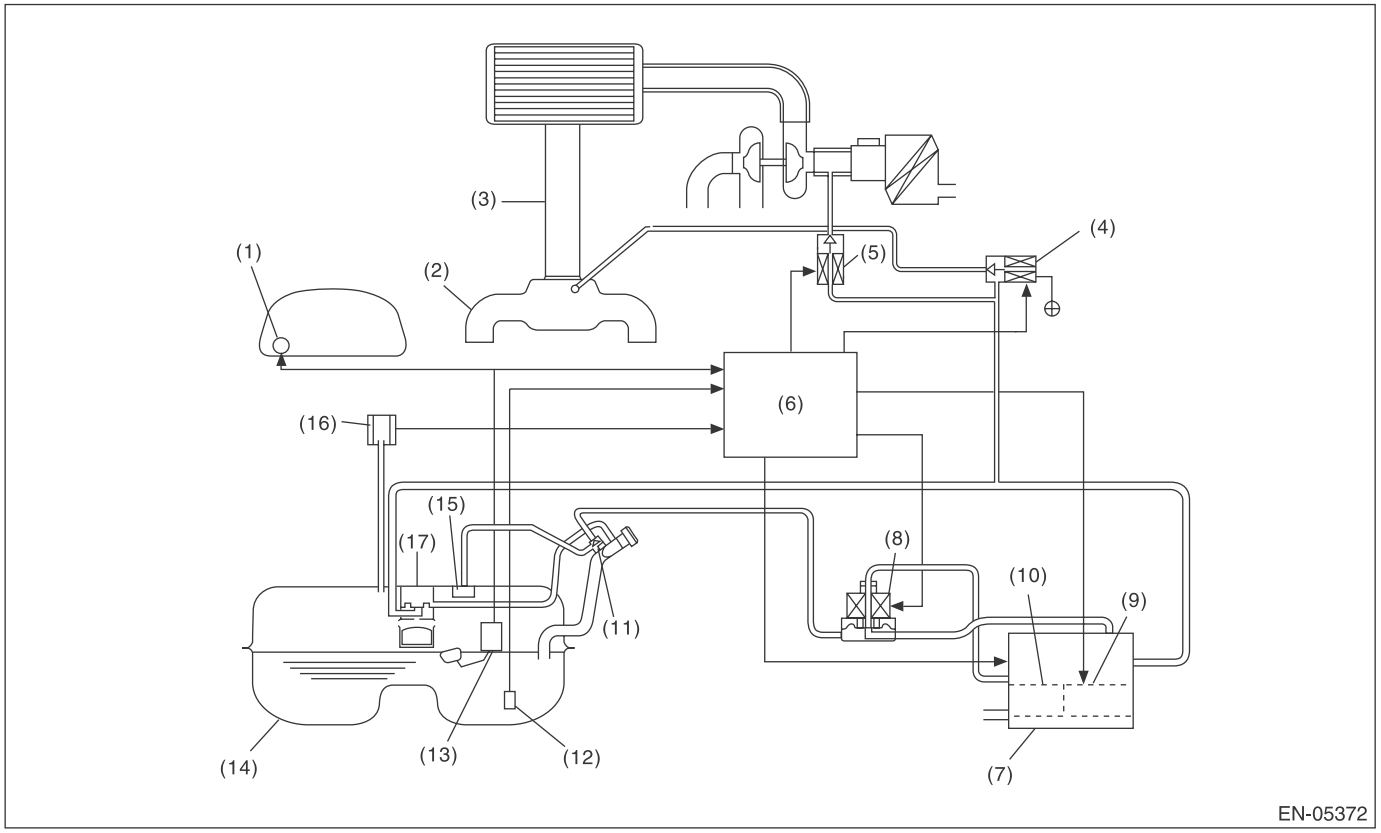

(1)	Fuel gauge	(7)	Canister	(13)	Fuel level sensor
(2)	Intake manifold	(8)	Pressure control valve	(14)	Fuel tank
(3)	Throttle body	(9)	Drain valve	(15)	Fuel cut valve
(4)	Purge control solenoid valve	(10)	Drain filter	(16)	Fuel tank pressure sensor
(5)	Purge control solenoid valve 2	(11)	Shut-off valve	(17)	Vent valve
(6)	Engine control module (ECM)	(12)	Fuel temperature sensor		

In this system diagnosis, check for leakage and valve function is conducted by changing the fuel tank pressure and monitoring the pressure change using the fuel tank pressure sensor. When in 0.04 inch diagnosis, perform in the order of mode Z → mode A → mode B → mode C and mode D; When in 0.02 inch diagnosis, perform in the order of mode A → mode B → mode C → mode D and mode E.

0.04-inch Diagnosis

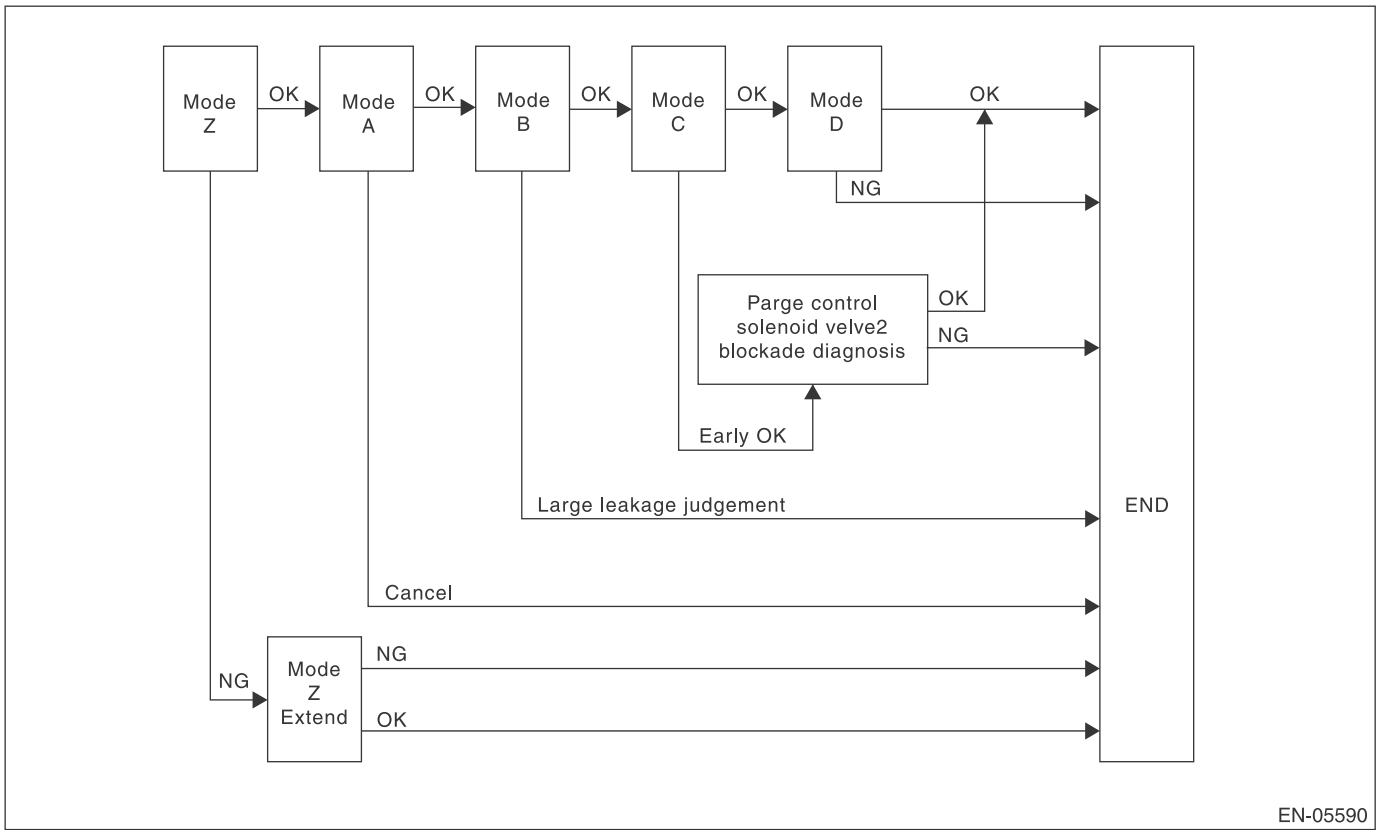

Mode	Mode Description	Diagnosis Period
Mode Z (Purge control solenoid valve opening failure diagnosis)	Perform purge control solenoid valve opening failure diagnosis from the size of tank pressure variation from diagnosis start.	0 ms + 3000 ms — 0 ms + 3000 ms + 13000 ms
Mode A (Estimated evaporation amount)	Calculate the tank pressure change amount (P1).	10000 ms
Mode B (Sealed negative pressure, large leakage judgment)	Decrease the pressure in the tank to the target value by introducing the intake manifold pressure to the fuel tank. If the tank pressure cannot be reduced, it is diagnosed as large leak.	0 — 10000 ms + 25000 ms
Mode C (Pressure increase check, advanced OK judgment)	Wait until the tank pressure returns to the target (start level of P2 calculation). If the tank pressure does not become the value, make advanced OK judgment.	0 — 23635 ms
Mode D (Negative pressure variation measurement, evaporation leakage diagnosis)	Calculate the tank pressure variation (P2), and obtain the diagnostic value using P1 found in Mode A. Perform the evaporation diagnosis using the diagnostic value.	0 ms + 10000 ms

Mode Table for Evaporative Emission Control System Diagnosis

Mode	Behavior of tank internal pressure under normal conditions	Diagnostic item	DTC
Mode Z	Roughly the same as barometric pressure (Same as 0 kPa (0 mmHg, 0 inHg))	Purge control solenoid valve is judged to be open.	P0457
Mode A	Pressure is in proportion to amount of evaporative emission.	—	None
Mode B	Negative pressure is formed due to intake manifold negative pressure	Large leak	P0457
Mode C	Reaches target pressure	—	None
Mode D	Pressure change is small.	EVAP system large leak determination. [1.0 mm (0.04 in)]	P0442

0.02-inch Diagnosis

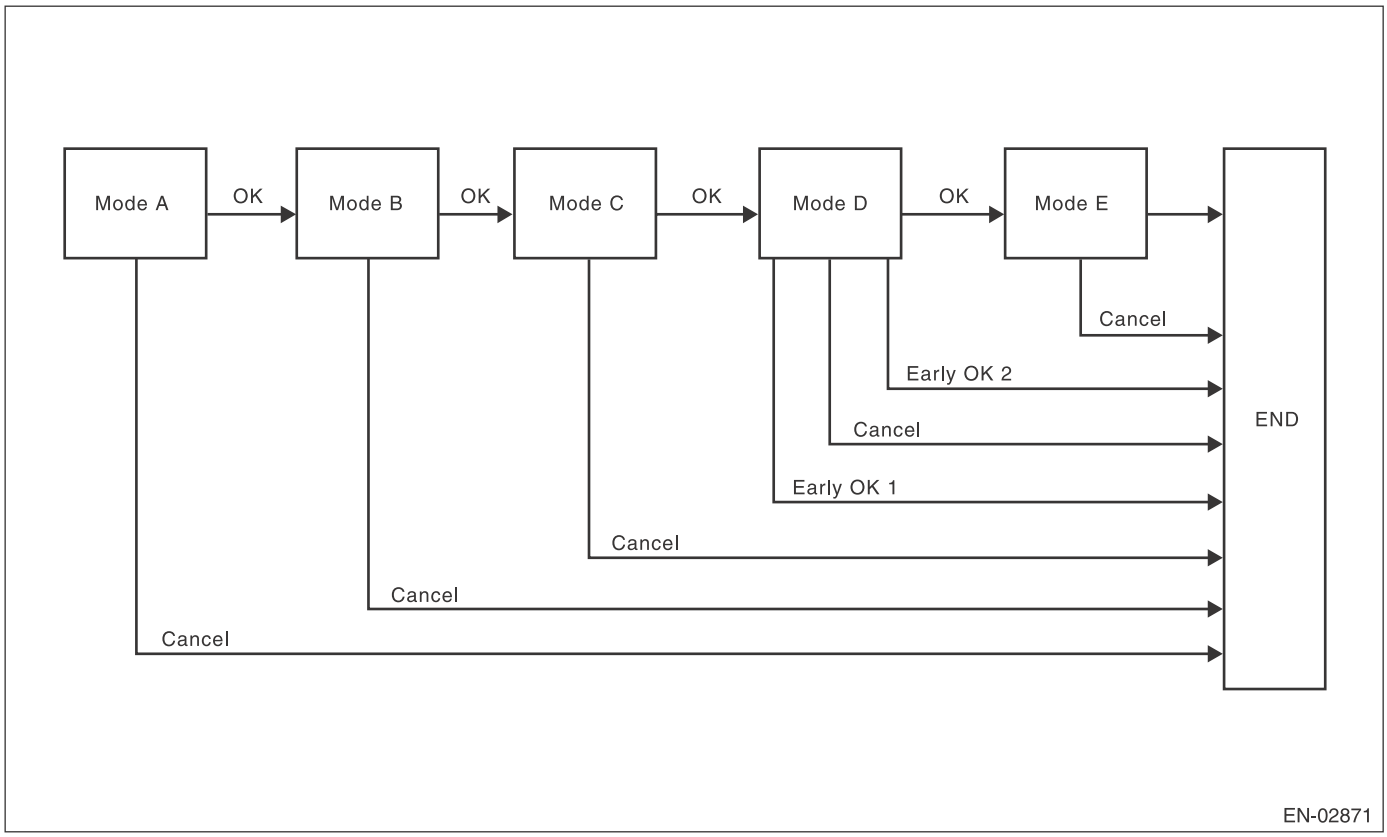

Mode	Mode Description	Diagnosis Period
Mode A (0 point compensation)	When the pressure in the tank is not near 0 mmHg, wait until it returns to 0 point (near 0 mmHg).	0 — Value of Map 1
Mode B (Negative pressure introduced)	Decrease the pressure in the tank to the target value by introducing the intake manifold pressure to the fuel tank.	0 — Value of Map 2
Mode C (Negative pressure maintained)	Wait until the tank pressure returns to the target (start level of P2 calculation).	Value from Map 3
Mode D (Negative pressure change calculated)	Calculate the time it takes for the tank pressure to change to the Mode E shifting pressure. If the tank pressure does not change to the Mode E shifting pressure, make advanced OK judgment.	0 — 0 ms + Value from Map 4
Mode E (Evaporation generated amount calculation)	Calculate the amount of evaporation (P1).	0 — 0 ms + Value from Map 4 + Value from Map 5

Map 1

Fuel level (ℓ , US gal, Imp gal)	10	27, 7.13, 5.94	43, 11.36, 9.46	59.5, 15.72, 13.09
Time Needed for Diagnosis (ms)	9216	9216	7936	4736

Map 2

Fuel level (ℓ , US gal, Imp gal)	10	27, 7.13, 5.94	43, 11.36, 9.46	59.5, 15.72, 13.09
Time Needed for Diagnosis (ms)	21180	23924	24931	24931

Map 3

Fuel level (ℓ , US gal, Imp gal)	10	27, 7.13, 5.94	43, 11.36, 9.46	59.5, 15.72, 13.09
Time Needed for Diagnosis (ms)	51830	32722	18045	13071

Map4

Fuel level (ℓ , US gal, Imp gal)	10	20, 5.28, 4.4	30, 7.93, 6.6	40, 10.57, 8.8	50, 13.21, 11	60, 15.85, 13.2
Time Needed for Diagnosis (ms)	200000	200000	200000	200000	200000	200000

Map 5

Fuel level (ℓ , US gal, Imp gal)	10	20, 5.28, 4.4	30, 7.93, 6.6	40, 10.57, 8.8	50, 13.21, 11	60, 15.85, 13.2
Time Needed for Diagnosis (ms)	80000	70000	60000	60000	60000	60000

2. COMPONENT DESCRIPTION

Pressure control solenoid valve

PCV controls the fuel tank pressure to be equal to the atmospheric air pressure. Normally, the solenoid is set to OFF. The valve opens and closes mechanically in accordance with the pressure difference between tank and atmospheric air, or tank and canister.
The valve is forcibly opened by setting the solenoid to ON at the time of diagnosis.

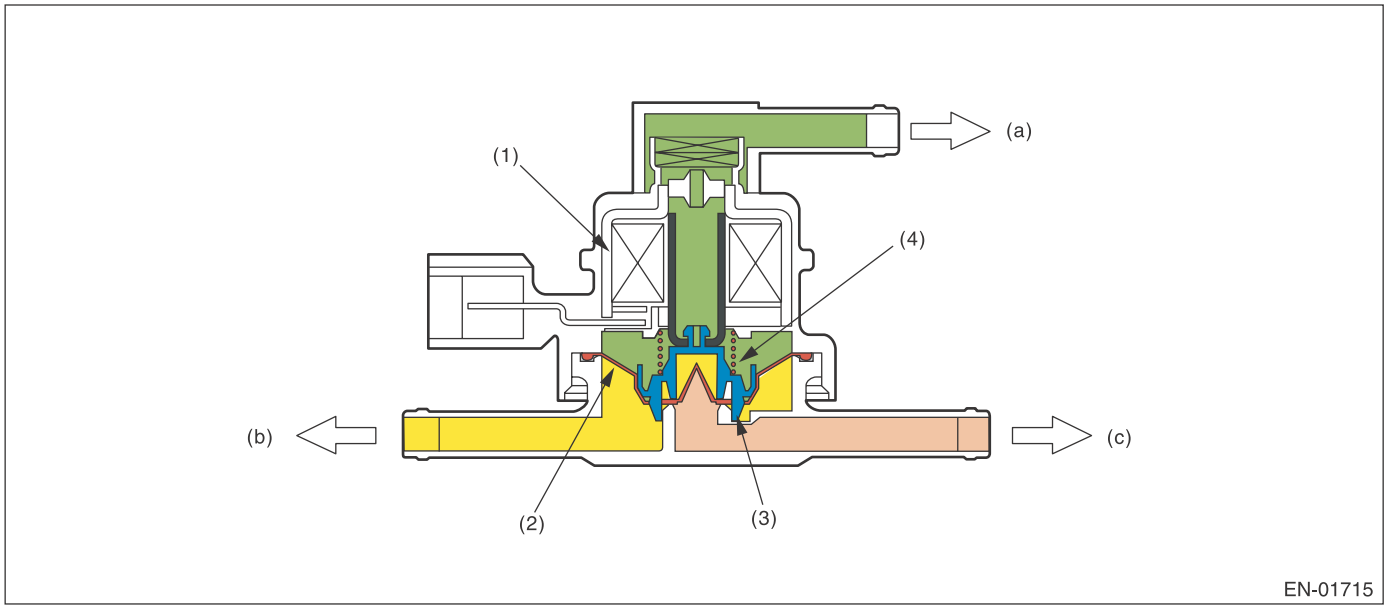

(a) Atmospheric pressure
(b) Fuel tank
(c) Canister
(1) Solenoid
(2) Diaphragm
(3) Valve
(4) Spring

Valve Operation and Air Flow

In the figure below, divided by the diaphragm, the part above X is charged with atmospheric air pressure, and the part below X is charged with tank pressure. Also, the part above Y is charged with tank pressure, and the part below Y is charged with canister pressure.
If the atmospheric air pressure port is A, tank pressure port is B, and canister pressure port is C, the air flows according to pressure difference from each port as shown in the table below.

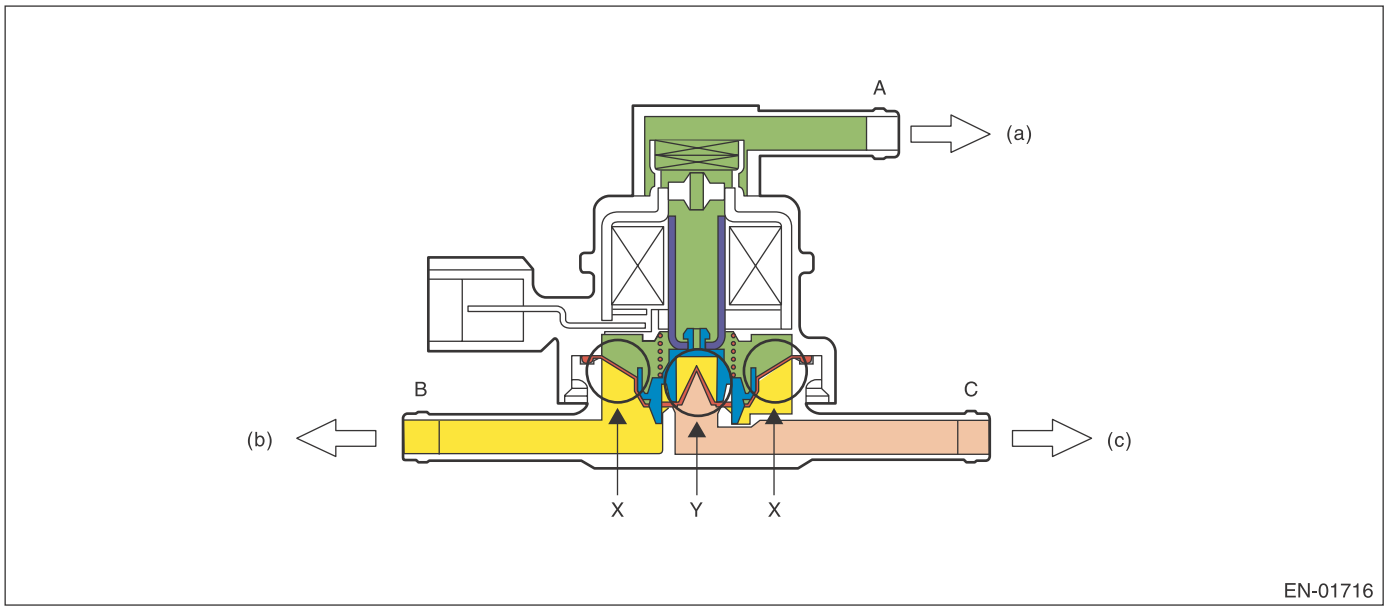

(a) Atmospheric pressure (b) Fuel tank (c) Canister

Condition of pressure	Flow
A < B (solenoid OFF)	B → C
B < C (solenoid OFF)	C → B
Solenoid ON	B ← → C

When A < B (solenoid OFF)

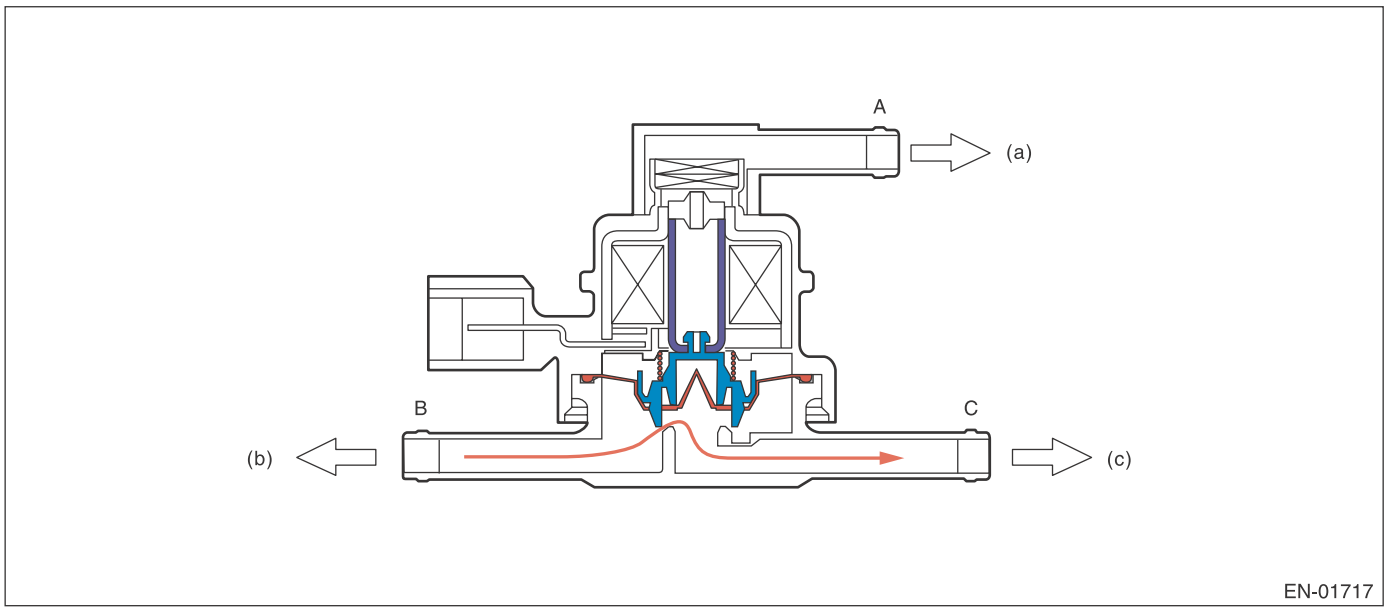

(a) Atmospheric pressure (b) Fuel tank (c) Canister

When B < C (solenoid OFF)

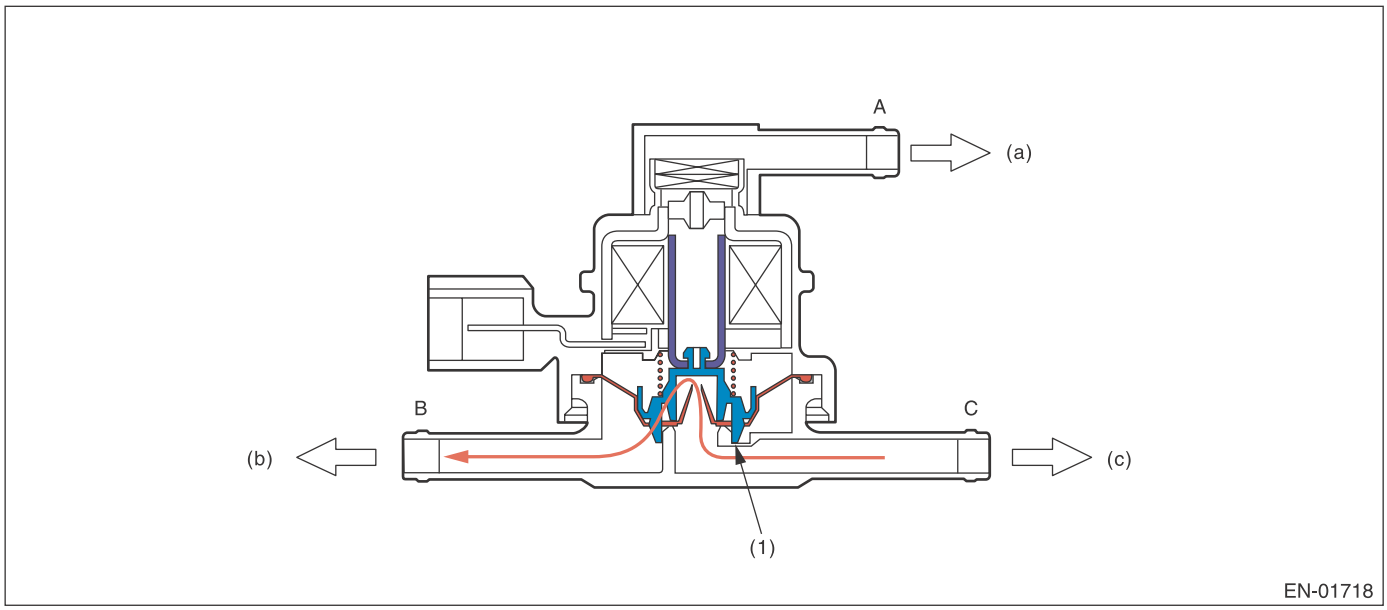

(a) Atmospheric pressure (b) Fuel tank (c) Canister

(1) Valve

When Solenoid is ON

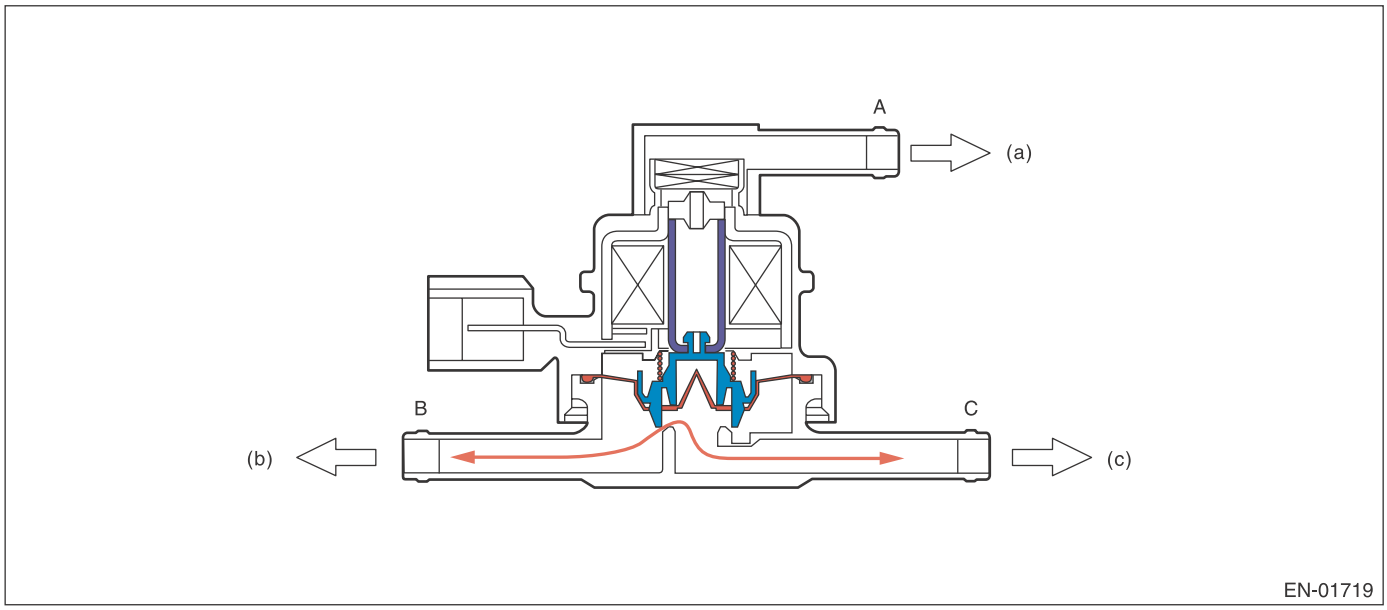

(a) Atmospheric pressure (b) Fuel tank (c) Canister

Drain valve

Drain valve controls the ambient air to be introduced to the canister.

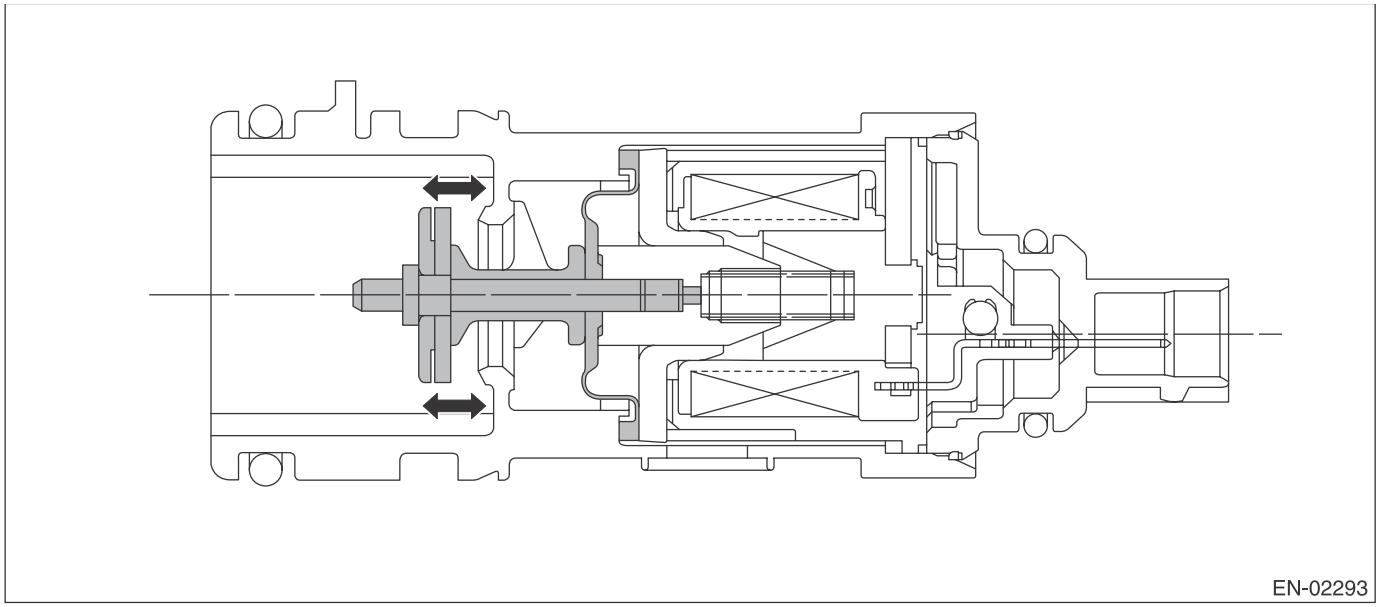

3. ENABLE CONDITION

0.04-inch Diagnosis

Secondary Parameters	Enable Conditions
Battery voltage	≥ 10.9 V
Atmospheric pressure	≥ 75 kPa (563 mmHg, 22.2 inHg)
Total time of canister purge operation	≥ 120000 ms
Learning value of evaporation gas density	< 0.08
Engine speed	1050 rpm — 4000 rpm
Fuel tank pressure	≥ –4 kPa (–30 mmHg, –1.2 inHg)
Intake manifold relative vacuum (relative pressure)	≥ –13.3 kPa (–100 mmHg, –3.9 inHg)
Continuous time of the status where fuel level is 10.5 ℓ (2.77 US gal, 2.31 Imp gal) — 59.5 ℓ (15.72 US gal, 13.09 Imp gal)	≥ 37000 ms
Closed air/fuel ratio control	In operation
Fuel temperature	–10 °C (14 °F) — 45 °C (113 °F)
Intake air temperature	≥ –10 °C (14 °F)
Pressure variation every one second	< 1.7 mmHg (Mode A) < 1.7 mmHg (Mode D)
Minimum pressure variation value every one second – Maximum pressure variation value every one second	< 1.7 mmHg (Mode A) < 1.7 mmHg (Mode D)
Fuel level variation every 128 ms	< Value of Map 6
Air fuel ratio	0.76 — 1.25
Elapsed time after starting the engine	≥ 856 s
or	
Elapsed time after starting the engine	≥ 335 s and Vehicle speed 72 km/h (44.7 MPH) or more

Map 6

Fuel level (ℓ , US gal, Imp gal)	10, 2.64, 2.2	20, 5.28, 4.4	25, 6.61, 5.5	30, 7.93, 6.6	43, 11.36, 9.46	45, 11.89, 9.9	50, 13.21, 11	60, 15.85, 13.2
Change (ℓ , US gal, Imp gal)	4, 1.06, 0.88	5, 1.32, 1.1	6.5, 1.72, 1.43	4, 1.06, 0.88	5, 1.32, 1.1	5, 1.32, 1.1	6, 1.59, 1.32	8, 2.11, 1.76

0.02-inch Diagnosis

Secondary Parameters	Enable Conditions
At starting a diagnosis	
Evap. diagnosis	Incomplete
Battery voltage	≥ 10.9 V
Atmospheric pressure	≥ 75 kPa (563 mmHg, 22.2 inHg)
Time since last incomplete 0.02-inch leakage diagnosis	
When cancelling in mode A	> 120000 ms
When cancelling in other than mode A	> 240000 ms
Total time of canister purge operation	≥ 120000 ms
Elapsed time after starting the engine	≥ 120 s
Fuel temperature	–10 °C (14 °F) — 55 °C (131 °F)
Continuous time of the status where fuel level is 10.5 ℓ (2.77 US gal, 2.31 Imp gal) — 59.5 ℓ (15.72 US gal, 13.09 Imp gal)	≥ 37000 ms
Intake manifold relative vacuum (relative pressure)	≥ –13.3 kPa (–100 mmHg, –3.9 inHg)
Fuel tank pressure	–0.7 kPa (–5 mmHg, –0.2 inHg) — 1.4 kPa (10.7 mmHg, 0.4 inHg)
Closed air/fuel ratio control	In operation
Engine speed	1050 rpm — 4000 rpm
Vehicle speed	Continue the status of 50 km/h (31.1 MPH) — 510 km/h (316.9 MPH) for 125000 ms or more.
During diagnosis	
Change of fuel level	≤ Value of Map 7
Pressure variation every one second	< 0.1 kPa (0.44 mmHg, 0 inHg)
Minimum pressure variation value every one second – Maximum pressure variation value every one second	< 0.1 kPa (0.51 mmHg, 0 inHg) (Mode D)
|Tank pressure variation every one second|	≤ 0.1 kPa (0.75 mmHg, 0 inHg)
Barometric pressure change	–0.5 kPa (–3.6 mmHg, –0.1 inHg) — 0.3 kPa (2.4 mmHg, 0.1 inHg) (Mode D) –0.3 kPa (–2.4 mmHg, –0.1 inHg) — 0.3 kPa (2.4 mmHg, 0.1 inHg) (Mode E)

Map 7

Fuel level (ℓ , US gal, Imp gal)	10, 2.64, 2.2	20, 5.28, 4.4	25, 6.61, 5.5	30, 7.93, 6.6	43, 11.36, 9.46	45, 11.89, 9.9	50, 13.21, 11	60, 15.85, 13.2
Change (ℓ , US gal, Imp gal)	4, 1.06, 0.88	5, 1.32, 1.1	6.5, 1.72, 1.43	4, 1.06, 0.88	5, 1.32, 1.1	5, 1.32, 1.1	6, 1.59, 1.32	8, 2.11, 1.76

4. GENERAL DRIVING CYCLE

0.04-inch Diagnosis

- Perform the diagnosis only once, 335 seconds or more after starting the engine, at a constant speed of 72 km/h (45 MPH) or more.
- Pay attention to the fuel temperature and fuel level.

0.02-inch Diagnosis

- Perform the diagnosis after 125 seconds or more have elapsed at a constant engine speed of 50 km/h (31 MPH) or higher to judge as NG or OK.
- If judgment cannot be made, repeat the diagnosis.
- Pay attention to the fuel level.

5. DIAGNOSTIC METHOD

Purge control solenoid valve stuck open fault diagnosis

DTC
P0457 Evaporative Emission Control System Leak Detected (Fuel Cap Loose/Off)

Purpose of Mode Z

When performing the leakage diagnosis of EVAP system, the purge control solenoid valve must operate normally. Therefore, mode Z is used to diagnose the purge control solenoid valve stuck open condition. Note that if a purge control solenoid valve stuck open fault is detected, the EVAP system leakage diagnosis is cancelled.

Diagnostic method

Purge control solenoid valve functional diagnosis is performed by monitoring the tank pressure in mode Z.

- **Abnormality Judgment**

If OK judgment cannot be made, extend Mode Z, and Judge as NG when the following conditions are established after predetermined amount of time.

Judgment Value

Malfunction Criteria	Threshold Value	DTC
evptez – evptezha	> 0.9 kPa (6.5 mmHg, 0.3 inHg)	P0457
evptezini	≤ 1.4 kPa (10.7 mmHg, 0.4 inHg)	
Time of no fuel sloshing with value from Map 6 or more	≥ 40000 ms	

Time Needed for Diagnosis: 0 ms + 3000 ms + 13000 ms

Malfunction Indicator Light Illumination: Illuminates when malfunction occurs in 2 continuous driving cycles.

When judgment for purge control solenoid valve stuck open NG is made, end the evaporative diagnosis.

Cancel the evaporative diagnosis when the OK/NG judgment for purge control solenoid valve stuck open cannot be made in Mode Z.

- **Normality Judgment**

Judge as OK and change to Mode A when the following conditions are established after 3000 ms has passed since Mode Z started.

Judgment Value

Malfunction Criteria	Threshold Value	DTC
evptez – evptezha	≤ 0.4 kPa (3 mmHg, 0.1 inHg)	P0457

Normal

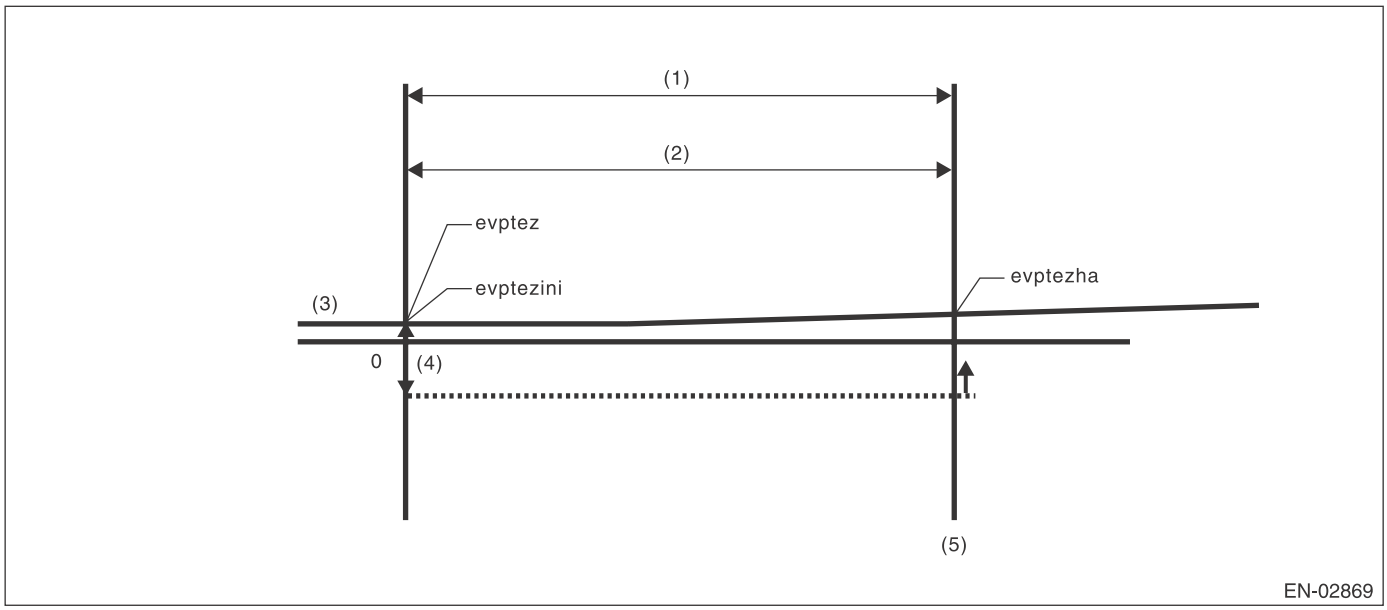

(1) Mode Z
(2) 3000 ms
(3) Fuel tank pressure
(4) 0.4 kPa (3 mmHg, 0.1 inHg)
(5) OK judgment

evptez – evptezha ≤ 0.4 kPa (3 mmHg, 0.1 inHg) Normal when above is established
Time Needed for Diagnosis: 0 ms + 3000 ms

Purge control solenoid valve Open Fixation

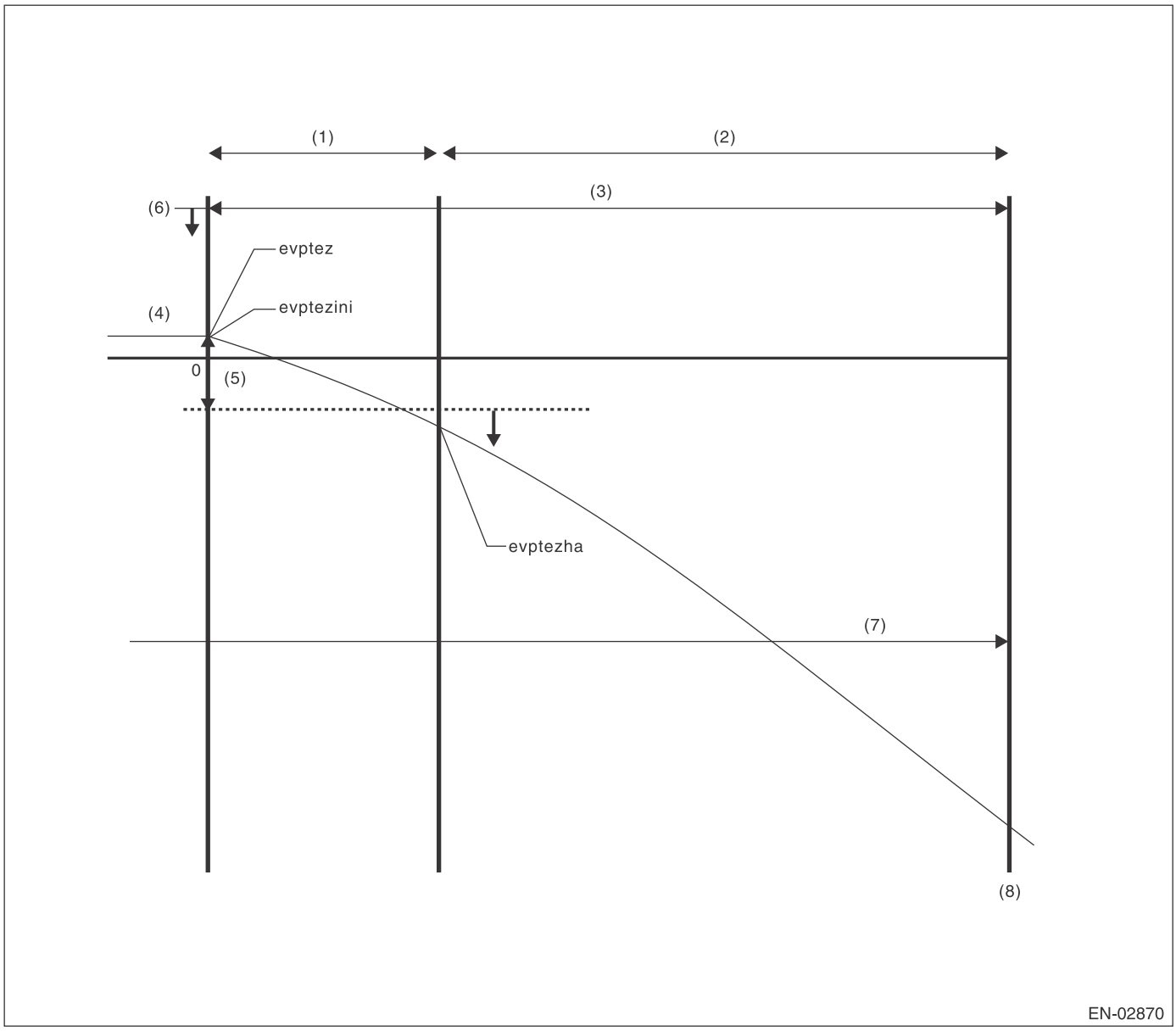

(1)	Mode Z	(4)	Fuel tank pressure	(7)	40000 ms no fuel sloshing
(2)	Extended mode Z	(5)	0.9 kPa (6.5 mmHg, 0.3 inHg)	(8)	NG judgment
(3)	0 ms + 3000 ms + 13000 ms	(6)	1.4 kPa (10.7 mmHg, 0.4 inHg)		

- evptezini ≤ 1.4 kPa (10.7 mmHg, 0.4 inHg)
- evptez – evptezha > 0.9 kPa (6.5 mmHg, 0.3 inHg)
- No fuel sloshing with value from Map 6 or more lasts for 40000 ms.

Judge as abnormal when all are established.

Leak Diagnosis

DTC
P0442 Evaporative Emission Control System Leak Detected (Small Leak)
P0457 Evaporative Emission Control System Leak Detected (Fuel Cap Loose/Off)

- The diagnostic consists of creating a sealed vacuum in the fuel tank and then determining the presence of leakage from the speed at which the tank internal pressure returns to barometric pressure.
- The diagnosis is divided into the following five phases.

Mode A: (Estimated evaporation gas amount)
Calculate the tank pressure change amount (P1) when using mode A. After calculating P1, switch to mode B.
Mode B: (Negative pressure sealed)
Introduce negative pressure in the intake manifold to the tank.
Approx. 0 → –1.4 kPa (0 → –10.5 mmHg, 0 → –0.4 inHg)
When the pressure above (desired negative pressure) is reached, enters Mode C.
In this case, if the tank pressure does not reach the target negative pressure, judge that there is a large leakage in the system and terminate the evaporative emission control system diagnosis.
Abnormality Judgment
Judge as NG (large leakage) when the following conditions are established.
Judgment Value

Malfunction Criteria	Threshold Value	DTC
Time to reach target negative pressure	≥ 10000 ms + 25000 ms	P0457
or		
Mode B time	≥ 10000 ms	
(Min. pressure value in tank when in mode B) – (Tank pressure when mode B started)	> –0.3 kPa (–2.5 mmHg, –0.1 inHg)	

Time Needed for Diagnosis: 0 ms + 3000 ms + 10000 ms + 10000 ms + 25000 ms
Mode C: (Check pressure rise)
Stop the introduction of negative pressure. (Wait until the tank pressure returns to the start level of P2 calculation.)
Change to Mode D when the tank pressure returns to the start level of P2 calculation.
Judge immediate OK and change to Mode E when it does not return in spite of spending the specified time.

Tank pressure when starting calculation of P2	Time for advanced OK judgment
–1.4 kPa (–10.5 mmHg, –0.4 inHg)	23635 ms

Time Needed for Diagnosis: 0 ms + 3000 ms + 10000 ms + 10000 ms + 25000 ms + 23635 ms
Mode D: (Measure amount of negative pressure change)
Monitor the tank pressure change amount when using mode D. In this case, the tank pressure increases, (nears barometric pressure) because evaporation occurs. However, if any leakage exists, the pressure increases additionally in proportion to this leakage. The pressure variation of this tank is P2.
After calculating P2, perform a small leak diagnosis according to the items below.
When Mode D is ended
Assign tank variations measured in Mode A and Mode D, P1 and P2, to the formula below, judge small leaks in the system. If the measured judgment value exceeds the threshold value, it is judged to be a malfunction.

Abnormality Judgment
Judge as NG when the following conditions are established within the predetermined time. Judge as OK and clear the NG if the following conditions are not established within the predetermined time.

Judgment Value

Malfunction Criteria	Threshold Value	DTC
P2 – 1.5 – × P1 P2: Tank pressure that changes every 10000 ms in mode D P1: Tank pressure that changes every 10000 ms in mode A	> Value of Map 8	P0442

*1.5 –: Evaporation amount compensation value when below negative pressure (Amount of evaporation occurrence increases as a vacuum condition increases.)

Map 8 Fault criteria limit for Evaporative emission control system diagnosis

Fuel temperature vs. Fuel level	15 °C (59 °F)	25 °C (77 °F)	35 °C (95 °F)	45 °C (113 °F)
10.5 ℓ (2.77 US gal, 2.31 Imp gal)	0.3 kPa (2.00 mmHg, 0.1 inHg)	0.3 kPa (2.17 mmHg, 0.1 inHg)	0.3 kPa (2.34 mmHg, 0.1 inHg)	0.4 kPa (2.66 mmHg, 0.1 inHg)
27 ℓ (7.13 US gal, 5.94 Imp gal)	0.3 kPa (2.12 mmHg, 0.1 inHg)	0.3 kPa (2.22 mmHg, 0.1 inHg)	0.3 kPa (2.40 mmHg, 0.1 inHg)	0.4 kPa (3.07 mmHg, 0.1 inHg)
43 ℓ (11.36 US gal, 9.46 Imp gal)	0.4 kPa (2.74 mmHg, 0.1 inHg)	0.4 kPa (2.91 mmHg, 0.1 inHg)	0.4 kPa (3.08 mmHg, 0.1 inHg)	0.4 kPa (3.26 mmHg, 0.1 inHg)
59.5 ℓ (15.72 US gal, 13.09 Imp gal)	0.5 kPa (3.38 mmHg, 0.1 inHg)	0.5 kPa (3.86 mmHg, 0.2 inHg)	0.5 kPa (3.87 mmHg, 0.2 inHg)	0.5 kPa (4.07 mmHg, 0.2 inHg)

Time Needed for Diagnosis: 0 ms + 3000 ms + 10000 ms + 10000 ms + 25000 ms + 23635 ms + 10000 ms
Malfunction Indicator Light Illumination: Illuminates when malfunction occurs in 2 continuous driving cycles.

Leak Diagnosis

DTC
P0456 Evaporative Emission Control System Leak Detected (very small leak)
- The diagnostic consists of creating a sealed vacuum in the fuel tank and then determining the presence of leakage from the speed at which the tank internal pressure returns to barometric pressure.
- The diagnosis is divided into the following five phases.

Mode A: (0 point compensation)
When the pressure in the tank is not near 0 mmHg, wait until it returns to 0 point (near 0 mmHg). Shift to mode B when returned to the 0 point. Cancel the diagnosis when 0 point does not return in the specified time.
Mode B: (Negative pressure introduced)
Introduce negative pressure in the intake manifold to the tank.
Approx. 0 → –2 kPa (0 → –15 mmHg, 0 → –0.6 inHg)
When the pressure above (desired negative pressure) is reached, enters Mode C.
When the tank internal pressure does not reach the target vacuum pressure, the diagnosis is cancelled.
Mode C: (Negative pressure maintained)
Stop the introduction of negative pressure. (Wait until the tank pressure returns to the start level of P2 calculation.)
Change to Mode D either when the tank pressure returns to the start level of P2 calculation, or when the predetermined amount of time has passed.
Mode D: (Calculate the amount of negative pressure change)
Monitor the tank pressure in mode D, calculate (P2) the pressure change in the tank, and measure the time (evpdset) for the tank pressure to change to the Mode E shifting pressure. When the Mode E shifting pressure is reached, Mode E is entered. If it does not change to the Mode E shifting pressure after the predetermined amount of time has passed, make advanced OK judgment or cancel the diagnosis.

Normality Judgment
Judge as OK when the following conditions are established.

Judgment Value

Malfunction Criteria	Threshold Value
Advanced OK judgment 1	
Mode D time	≥ 0 ms + 20000 ms
Tank internal pressure	≤ Value of Map 9
Advanced OK judgment 2	
Mode D time	≥ 0 ms + Value of Map 10
P2	≤ Value of Map 11

Map 9

Fuel level (ℓ , US gal, Imp gal)	10, 2.64, 2.2	27, 7.13, 5.94	43, 11.36, 9.46	59.5, 15.72, 13.09
Tank pressure (kPa, mmHg, inHgl)	–1.9, –14.61, –0.6	–1.9, –14.61, –0.6	–1.8, –13.64, –0.5	–1.8, –13.13, –0.5

Map 10

Fuel level (ℓ , US gal, Imp gal)	10, 2.64, 2.2	20, 5.28, 4.4	30, 7.93, 6.6	40, 10.57, 8.8	50, 13.21, 11	60, 15.85, 13.2
Time Needed for Diagnosis (ms)	200000	200000	200000	200000	200000	200000

Map 11

Fuel level (ℓ , US gal, Imp gal)	10, 2.64, 2.2	27, 7.13, 5.94	43, 11.36, 9.46	59.5, 15.72, 13.09
Tank pressure (kPa, mmHg, inHgl)	1.1, 8.52, 0.3	1.1, 8.52, 0.3	1.3, 10, 0.4	1.3, 10, 0.4

Mode E: (Evaporation occurrence amount calculation)
Calculate the change of tank pressure with the time evpdset (P1) to judge as NG/OK according to the value of P1. (ambiguous determination acceptable).

- **Abnormality Judgment**

Judge as NG when the following conditions are established.

Judgment Value

Malfunction Criteria	Threshold Value
P1	< Value of Map 12

Map 12 Malfunction criteria limit for evaporation diagnosis

Time (evpdset) vs Fuel level	40000 ms	60000 ms	105000 ms	110000 ms	140000 ms	160000 ms	180000 ms	200000 ms
10.5 ℓ (2.77 US gal, 2.31 Imp gal)	0 kPa (0.00 mmHg, 0 inHg)	0.1 kPa (0.70 mmHg, 0 inHg)	0.3 kPa (2.18 mmHg, 0.1 inHg)	0.3 kPa (2.23 mmHg, 0.1 inHg)	0.3 kPa (2.53 mmHg, 0.1 inHg)	0.4 kPa (2.72 mmHg, 0.1 inHg)	0.4 kPa (2.90 mmHg, 0.1 inHg)	0.4 kPa (2.90 mmHg, 0.1 inHg)
27 ℓ (7.13 US gal, 5.94 Imp gal)	0 kPa (0.00 mmHg, 0 inHg)	0.2 kPa (1.81 mmHg, 0.1 inHg)	0.3 kPa (2.46 mmHg, 0.1 inHg)	0.3 kPa (2.53 mmHg, 0.1 inHg)	0.4 kPa (2.90 mmHg, 0.1 inHg)	0.4 kPa (2.90 mmHg, 0.1 inHg)	0.4 kPa (2.90 mmHg, 0.1 inHg)	0.4 kPa (2.90 mmHg, 0.1 inHg)
43 ℓ (11.36 US gal, 9.46 Imp gal)	0 kPa (0.00 mmHg, 0 inHg)	0.2 kPa (1.53 mmHg, 0.1 inHg)	0.3 kPa (2.49 mmHg, 0.1 inHg)	0.3 kPa (2.60 mmHg, 0.1 inHg)	0.3 kPa (2.60 mmHg, 0.1 inHg)	0.3 kPa (2.60 mmHg, 0.1 inHg)	0.3 kPa (2.60 mmHg, 0.1 inHg)	0 kPa (0.00 mmHg, 0 inHg)
59.5 ℓ (15.72 US gal, 13.09 Imp gal)	0 kPa (0.00 mmHg, 0 inHg)	0.2 kPa (1.31 mmHg, 0.1 inHg)	0.3 kPa (2.53 mmHg, 0.1 inHg)	0.3 kPa (2.53 mmHg, 0.1 inHg)	0.3 kPa (2.53 mmHg, 0.1 inHg)	0.3 kPa (2.53 mmHg, 0.1 inHg)	0.2 kPa (1.26 mmHg, 0 inHg)	0 kPa (0.00 mmHg, 0 inHg)

Time needed for diagnosis: Value from Map 1 + Value from Map 2 + Value from Map 3 + 0 ms + Value from Map 4 + 0 ms + Value from Map 4 + Value from Map 5
Malfunction Indicator Light Illumination: Illuminates when malfunction occurs in 2 continuous driving cycles.

- **Normality Judgment**

Judge as OK when the following conditions are established.

Judgment Value

Malfunction Criteria	Threshold Value
P1	> Value of Map 13

Map 13 Malfunction criteria limit for evaporation diagnosis

Time (evpdset) vs Fuel level	20000 ms	60000 ms	105000 ms	110000 ms	140000 ms	160000 ms	180000 ms	200000 ms
10.5 ℓ (2.77 US gal, 2.31 Imp gal)	0 kPa (0.00 mmHg, 0 inHg)	0.3 kPa (2.20 mmHg, 0.1 inHg)	0.5 kPa (3.68 mmHg, 0.1 inHg)	0.5 kPa (3.73 mmHg, 0.1 inHg)	0.5 kPa (4.03 mmHg, 0.2 inHg)	0.6 kPa (4.22 mmHg, 0.2 inHg)	0.6 kPa (4.40 mmHg, 0.2 inHg)	0.6 kPa (4.40 mmHg, 0.2 inHg)
27 ℓ (7.13 US gal, 5.94 Imp gal)	0 kPa (0.00 mmHg, 0 inHg)	0.4 kPa (3.31 mmHg, 0.1 inHg)	0.5 kPa (3.96 mmHg, 0.2 inHg)	0.5 kPa (4.03 mmHg, 0.2 inHg)	0.6 kPa (4.40 mmHg, 0.2 inHg)	0.6 kPa (4.40 mmHg, 0.2 inHg)	0.6 kPa (4.40 mmHg, 0.2 inHg)	0.6 kPa (4.40 mmHg, 0.2 inHg)
43 ℓ (11.36 US gal, 9.46 Imp gal)	0 kPa (0.00 mmHg, 0 inHg)	0.4 kPa (3.03 mmHg, 0.1 inHg)	0.5 kPa (3.99 mmHg, 0.2 inHg)	0.5 kPa (4.10 mmHg, 0.2 inHg)	0.5 kPa (4.10 mmHg, 0.2 inHg)	0.5 kPa (4.10 mmHg, 0.2 inHg)	0.5 kPa (4.10 mmHg, 0.2 inHg)	0.2 kPa (1.50 mmHg, 0.1 inHg)
59.5 ℓ (15.72 US gal, 13.09 Imp gal)	0 kPa (0.00 mmHg, 0 inHg)	0.4 kPa (2.81 mmHg, 0.1 inHg)	0.5 kPa (4.03 mmHg, 0.2 inHg)	0.5 kPa (4.03 mmHg, 0.2 inHg)	0.5 kPa (4.03 mmHg, 0.2 inHg)	0.5 kPa (4.03 mmHg, 0.2 inHg)	0.4 kPa (2.76 mmHg, 0.1 inHg)	0.2 kPa (1.50 mmHg, 0.1 inHg)

Time needed for diagnosis: Value from Map 1 + Value from Map 2 + Value from Map 3 + 0 ms + Value from Map 4 + 0 ms + Value from Map 4 + Value from Map 5

BL:DTC P0447 EVAPORATIVE EMISSION CONTROL SYSTEM VENT CONTROL CIRCUIT OPEN

1. OUTLINE OF DIAGNOSIS

Detect open or short circuit of the drain valve.
Judge as NG when the ECM output level differs from the actual terminal level.

2. COMPONENT DESCRIPTION

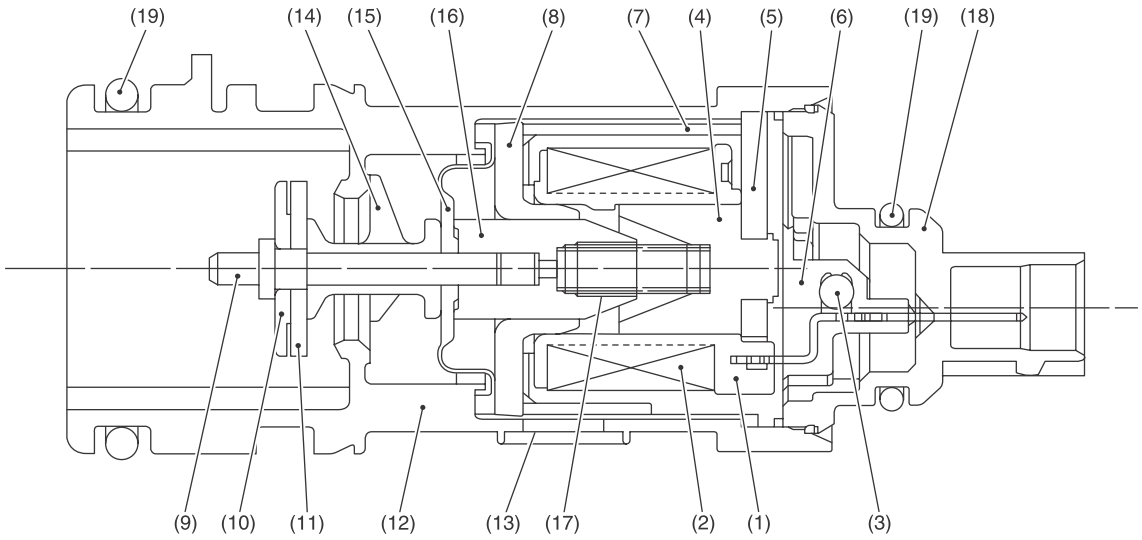

(1) Bobbin
(2) Coil
(3) Diode
(4) Stator core
(5) End plate
(6) Body
(7) Yoke
(8) Magnetic plate
(9) Shaft
(10) Plate
(11) Valve
(12) Housing
(13) Filter
(14) Retainer
(15) Diaphragm
(16) Movable core
(17) Spring
(18) Cover
(19) O-ring

3. ENABLE CONDITION

Secondary Parameters	Enable Conditions
None	

4. GENERAL DRIVING CYCLE

Always perform the diagnosis continuously.

5. DIAGNOSTIC METHOD

• Abnormality Judgment

If the duration of time while the following conditions are met is longer than the time indicated, judge as NG.

Judgment Value

Malfunction Criteria	Threshold Value
Battery voltage	≥ 10.9 V
Elapsed time after starting the engine	≥ 1 second
Terminal output voltage when ECM outputs OFF signal	Low

Time Needed for Diagnosis: 2500 ms
Malfunction Indicator Light Illumination: Illuminates as soon as a malfunction occurs.

• Normality Judgment

Judge as OK and clear the NG if the continuous time while the following conditions are established is more than the predetermined time.

Judgment Value

Malfunction Criteria	Threshold Value
Battery voltage	≥ 10.9 V
Elapsed time after starting the engine	≥ 1 second
Terminal output voltage when ECM outputs OFF signal	High

Time Needed for Diagnosis: Less than 1 second

BM:DTC P0448 EVAPORATIVE EMISSION CONTROL SYSTEM VENT CONTROL CIRCUIT SHORTED

1. OUTLINE OF DIAGNOSIS

Detect open or short circuit of the drain valve.
Judge as NG when the ECM output level differs from the actual terminal level.

2. COMPONENT DESCRIPTION

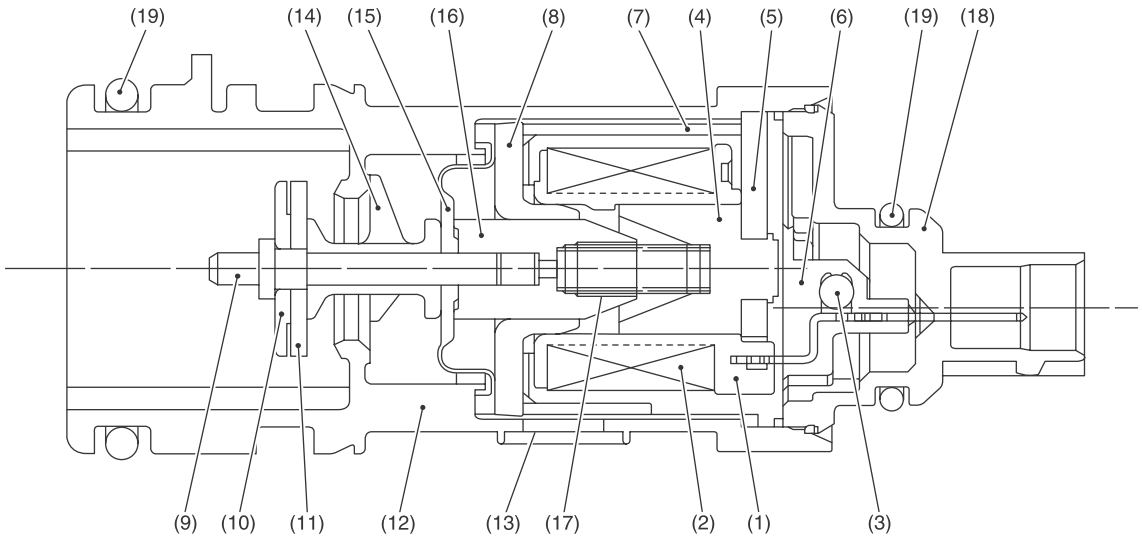

(1) Bobbin
(2) Coil
(3) Diode
(4) Stator core
(5) End plate
(6) Body
(7) Yoke
(8) Magnetic plate
(9) Shaft
(10) Plate
(11) Valve
(12) Housing
(13) Filter
(14) Retainer
(15) Diaphragm
(16) Movable core
(17) Spring
(18) Cover
(19) O-ring

3. ENABLE CONDITION

Secondary Parameters	Enable Conditions
None	

4. GENERAL DRIVING CYCLE

Always perform the diagnosis continuously.

5. DIAGNOSTIC METHOD

• Abnormality Judgment

If the duration of time while the following conditions are met is longer than the time indicated, judge as NG.

Judgment Value

Malfunction Criteria	Threshold Value
Battery voltage	≥ 10.9 V
Elapsed time after starting the engine	≥ 1 second
Terminal output voltage when ECM outputs ON signal	High

Time Needed for Diagnosis: 2500 ms
Malfunction Indicator Light Illumination: Illuminates as soon as a malfunction occurs.

• Normality Judgment

Judge as OK and clear the NG if the continuous time while the following conditions are established is more than the predetermined time.

Judgment Value

Malfunction Criteria	Threshold Value
Battery voltage	≥ 10.9 V
Elapsed time after starting the engine	≥ 1 second
Terminal output voltage when ECM outputs ON signal	Low

Time Needed for Diagnosis: Less than 1 second

BN:DTC P0451 EVAPORATIVE EMISSION CONTROL SYSTEM PRESSURE SENSOR

1. OUTLINE OF DIAGNOSIS

Detect the tank pressure sensor output property abnormality.
Judge as NG when there is no pressure variation, which should exist in the tank, considering the engine status.

2. COMPONENT DESCRIPTION

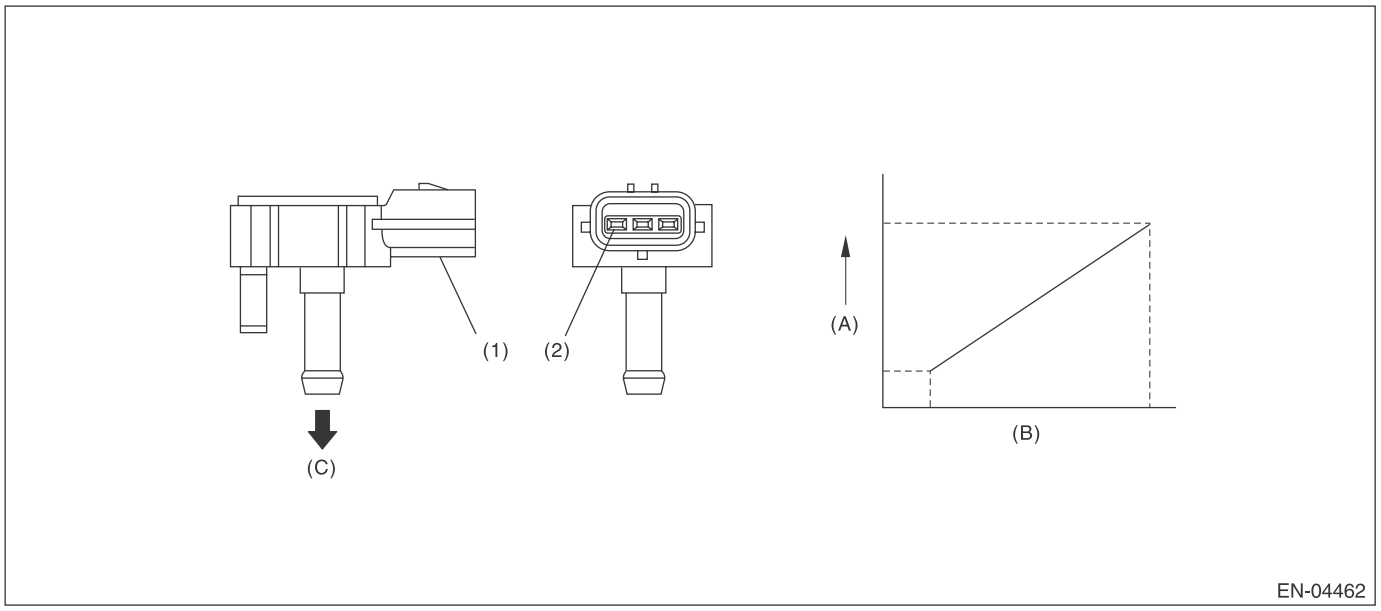

(A) Output voltage
(B) Input voltage
(C) To fuel tank
(1) Connector
(2) Terminals

3. ENABLE CONDITION

Secondary Parameters	Enable Conditions
Elapsed time after starting the engine	≥ 60 s
Fuel level	≥ 10.5 ℓ (2.77 US gal, 2.31 Imp gal)
Fuel temperature	< 35 °C (95 °F)
Battery voltage	≥ 10.9 V
Atmospheric pressure	≥ 75 kPa (563 mmHg, 22.2 inHg)

4. GENERAL DRIVING CYCLE

- Perform the diagnosis continuously after 60 s have passed since the engine started.
- Pay attention to the fuel level and temperature.

5. DIAGNOSTIC METHOD

• Abnormality Judgment

If the duration of time while the following conditions are met is longer than the time indicated, judge as NG.

Judgment Value

Malfunction Criteria	Threshold Value
Number of times that the difference between the Max. fuel level every 60 s and Min. fuel level every 60 s is 2 ℓ (0.53 US gal, 0.44 Imp gal) or more (with enable condition established)	≥ 16 time(s)
Maximum – Minimum tank pressure (with enable condition completed)	< 0 kPa (0.375 mmHg, 0 inHg)
Maximum – Minimum fuel temperature (with enable condition completed)	≥ 7 °C (44.6 °F)

If the difference between the Max. fuel level every 60 s and Min. fuel level every 60 s is less than 2 ℓ (0.53 US gal, 0.44 Imp gal), extend 60 s and make judgment with the Max. and Min. values for the fuel level in 60 s × 2. If there is no difference after the extension of 60 s, continue further to 60 s × 3, 60 s × 4, 60 s × 5. If the difference between the Max. fuel level every 60 s and Min. fuel level every 60 s is 2 ℓ (0.53 US gal, 0.44 Imp gal) or more, the diagnosis counter counts up.

Time Needed for Diagnosis: 60 s × 16 time(s) or more

Malfunction Indicator Light Illumination: Illuminates when malfunction occurs in 2 continuous driving cycles.

• Normality Judgment

Judge as OK and clear the NG if the continuous time while the following conditions are established is more than the predetermined time.

Judgment Value

Malfunction Criteria	Threshold Value
Maximum — Minimum tank pressure	≥ 0 kPa (0.375 mmHg, 0 inHg)

Time Needed for Diagnosis: Less than 1 second

BO:DTC P0452 EVAPORATIVE EMISSION CONTROL SYSTEM PRESSURE SENSOR LOW INPUT

1. OUTLINE OF DIAGNOSIS

Detect the open or short circuit of the fuel tank pressure sensor.
Judge as NG if out of specification.

2. COMPONENT DESCRIPTION

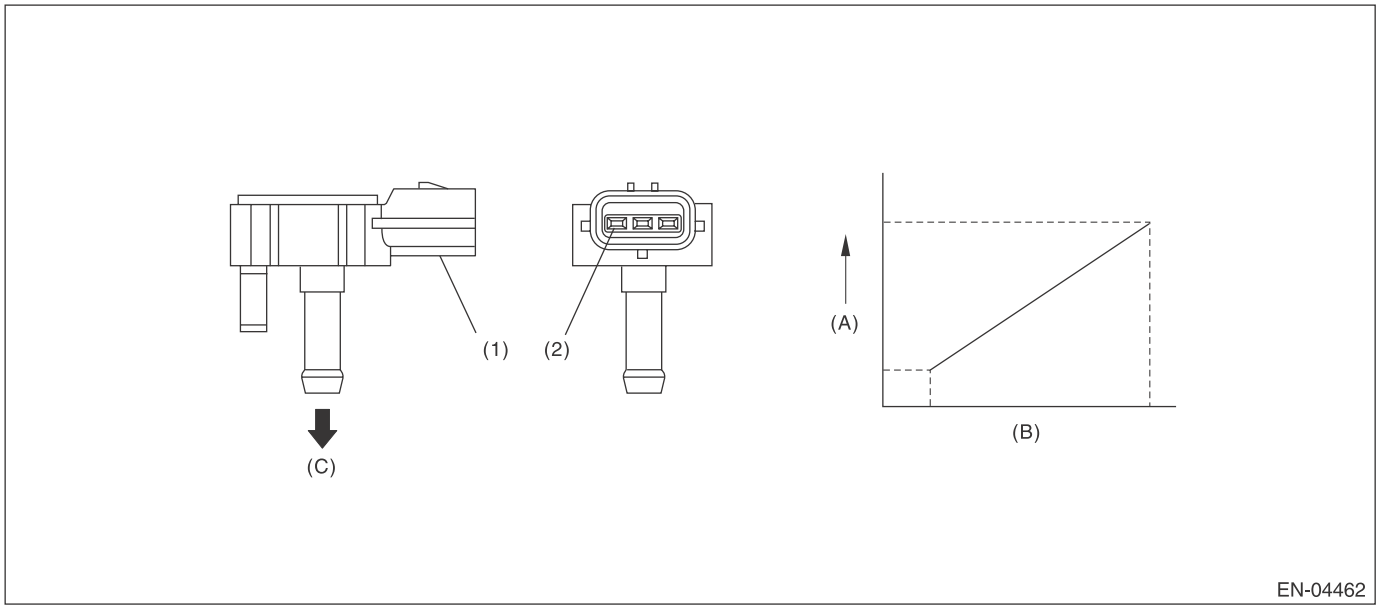

(A) Output voltage
(B) Input voltage
(C) To fuel tank
(1) Connector
(2) Terminals

3. ENABLE CONDITION

Secondary Parameters	Enable Conditions
None	

4. GENERAL DRIVING CYCLE

Always perform the diagnosis continuously.

5. DIAGNOSTIC METHOD

• Abnormality Judgment

If the duration of time while the following conditions are met is longer than the time indicated, judge as NG.

Judgment Value

Malfunction Criteria	Threshold Value
Fuel tank pressure	< –7.4 kPa (–55.6 mmHg, –2.2 inHg)
Battery voltage	≥ 10.9 V

Time Needed for Diagnosis: 15000 ms
Malfunction Indicator Light Illumination: Illuminates as soon as a malfunction occurs.

• Normality Judgment

Judge as OK and clear the NG if the continuous time while the following conditions are established is more than the predetermined time.

Judgment Value

Malfunction Criteria	Threshold Value
Fuel tank pressure	≥ –7.4 kPa (–55.6 mmHg, –2.2 inHg)
Battery voltage	≥ 10.9 V

Time Needed for Diagnosis: Less than 1 second

BP:DTC P0453 EVAPORATIVE EMISSION CONTROL SYSTEM PRESSURE SENSOR HIGH INPUT

1. OUTLINE OF DIAGNOSIS

Detect the open or short circuit of the fuel tank pressure sensor.
Judge as NG if out of specification.

2. COMPONENT DESCRIPTION

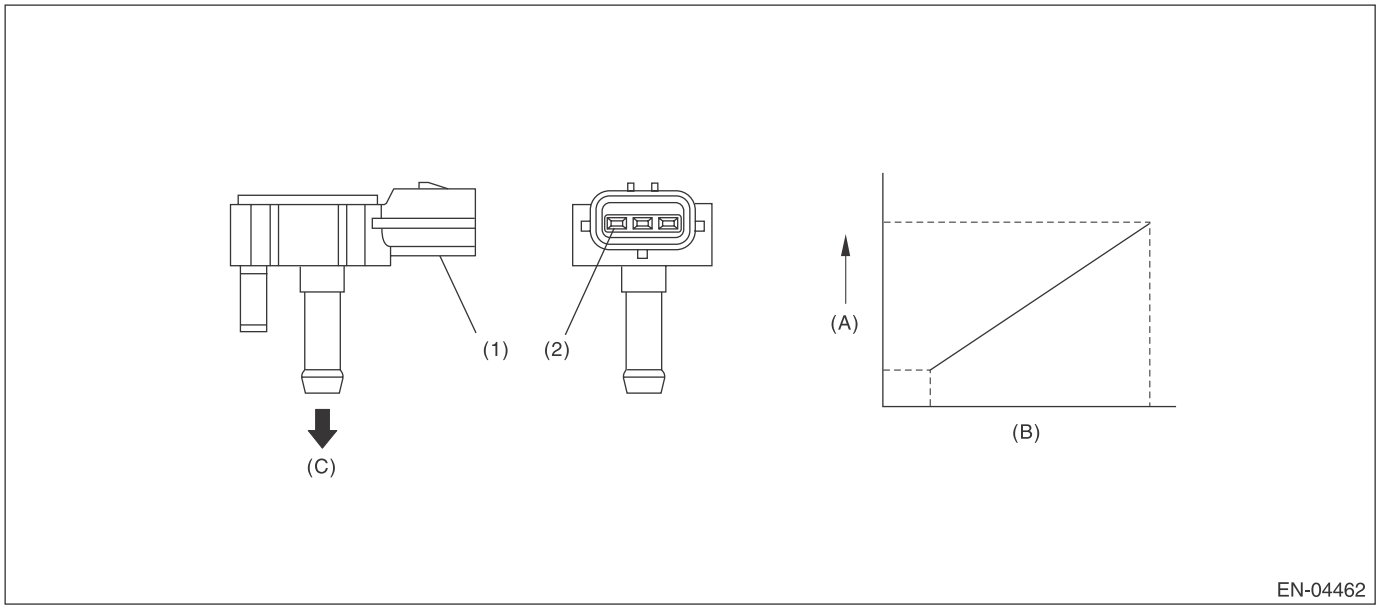

(A) Output voltage
(B) Input voltage
(C) To fuel tank
(1) Connector
(2) Terminals

3. ENABLE CONDITION

Secondary Parameters	Enable Conditions
Time needed for all secondary parameters to be in enable conditions	≥ 5000 ms
Vehicle speed	≥ 2 km/h (1.2 MPH)
All conditions of EVAP canister purge	Complete
Learning value of evaporation gas concentration (left and right)	< 0.08
Main feedback compensation coefficient (left and right)	≥ 0.9
Battery voltage	≥ 10.9 V

4. GENERAL DRIVING CYCLE

Perform the diagnosis when purging enable conditions are met without idling.

5. DIAGNOSTIC METHOD

• Abnormality Judgment

If the duration of time while the following conditions are met is longer than the time indicated, judge as NG.

Judgment Value

Malfunction Criteria	Threshold Value
Fuel tank pressure	≥ 7.9 kPa (59.6 mmHg, 2.3 inHg)
Fuel temperature	< 35 °C (95 °F)
Atmospheric pressure	≥ 75 kPa (563 mmHg, 22.2 inHg)

Time Needed for Diagnosis: 15000 ms
Malfunction Indicator Light Illumination: Illuminates as soon as a malfunction occurs.

• Normality Judgment

Judge as OK and clear the NG if the continuous time while the following conditions are established is more than the predetermined time.

Judgment Value

Malfunction Criteria	Threshold Value
Fuel tank pressure	< 7.9 kPa (59.6 mmHg, 2.3 inHg)

Time Needed for Diagnosis: Less than 1 second

BQ:DTC P0456 EVAPORATIVE EMISSION CONTROL SYSTEM LEAK DETECTED (VERY SMALL LEAK)

1. OUTLINE OF DIAGNOSIS

NOTE:
For the detection standard, refer to DTC P0442. <Ref. to GD(H4DOTC)-112, DTC P0442 EVAPORATIVE EMISSION CONTROL SYSTEM LEAK DETECTED (SMALL LEAK), Diagnostic Trouble Code (DTC) Detecting Criteria.>

BR:DTC P0457 EVAPORATIVE EMISSION CONTROL SYSTEM LEAK DETECTED (FUEL CAP LOOSE/OFF)

1. OUTLINE OF DIAGNOSIS

NOTE:
For the detection standard, refer to DTC P0442. <Ref. to GD(H4DOTC)-112, DTC P0442 EVAPORATIVE EMISSION CONTROL SYSTEM LEAK DETECTED (SMALL LEAK), Diagnostic Trouble Code (DTC) Detecting Criteria.>

BS:DTC P0458 EVAPORATIVE EMISSION SYSTEM PURGE CONTROL VALVE CIRCUIT LOW

1. OUTLINE OF DIAGNOSIS

Detect open or short circuit of the purge control solenoid valve.
Judge as NG when the ECM output level differs from the actual terminal level.

2. COMPONENT DESCRIPTION

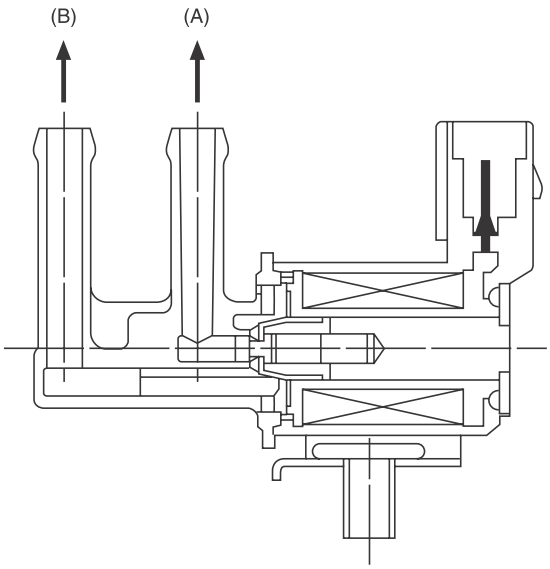

EN-02197

(A) To canister
(B) To intake manifold

3. ENABLE CONDITION

Secondary Parameters	Enable Conditions
Battery voltage	≥ 10.9 V
Elapsed time after starting the engine	≥ 1 second

4. GENERAL DRIVING CYCLE

Always perform the diagnosis after starting the engine.

5. DIAGNOSTIC METHOD

- **Abnormality Judgment**

If the duration of time while the following conditions are met is longer than the time indicated, judge as NG.

Judgment Value

Malfunction Criteria	Threshold Value
Duty ratio of “ON”	< 0.75
Terminal output voltage	Low

Time Needed for Diagnosis: 2500 ms
Malfunction Indicator Light Illumination: Illuminates when malfunction occurs in 2 continuous driving cycles.

- **Normality Judgment**

Judge as OK and clear the NG if the continuous time while the following conditions are established is more than the predetermined time.

Judgment Value

Malfunction Criteria	Threshold Value
Terminal output voltage	High

Time Needed for Diagnosis: Less than 1 second

BT:DTC P0459 EVAPORATIVE EMISSION SYSTEM PURGE CONTROL VALVE CIRCUIT HIGH

1. OUTLINE OF DIAGNOSIS

Detect open or short circuit of the purge control solenoid valve.
Judge as NG when the ECM output level differs from the actual terminal level.

2. COMPONENT DESCRIPTION

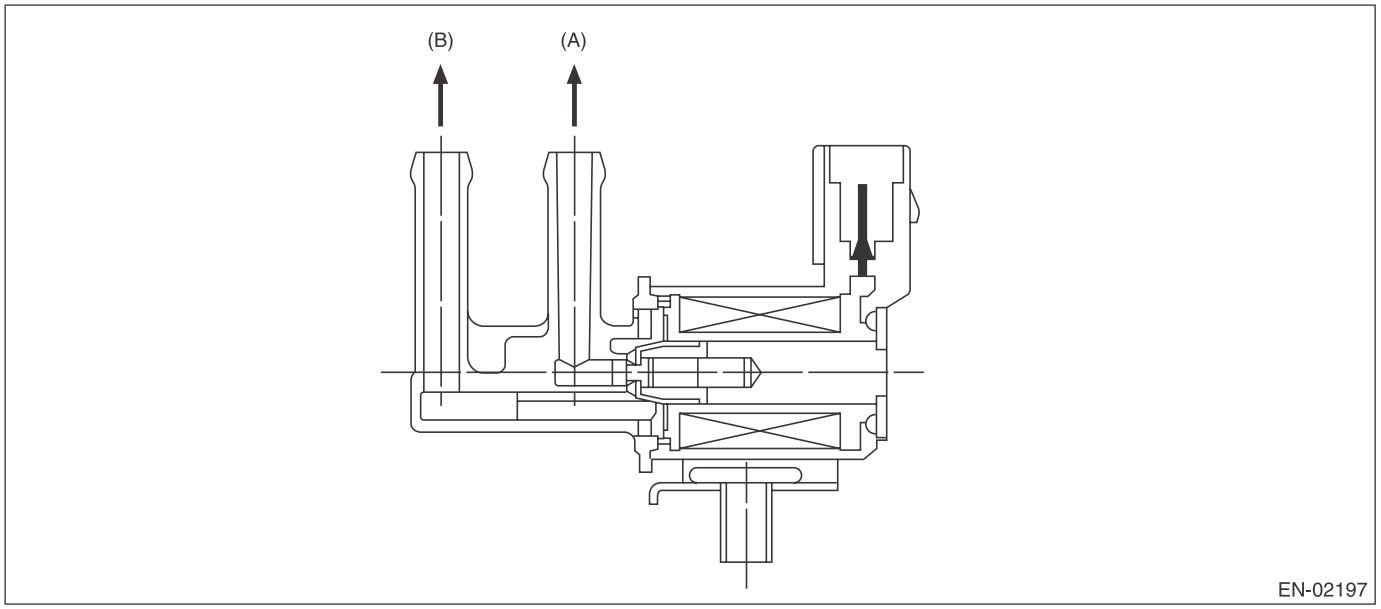

(A) To canister
(B) To intake manifold

3. ENABLE CONDITION

Secondary Parameters	Enable Conditions
Battery voltage	≥ 10.9 V
Elapsed time after starting the engine	≥ 1 second

4. GENERAL DRIVING CYCLE

Always perform the diagnosis after starting the engine.

5. DIAGNOSTIC METHOD

- **Abnormality Judgment**

If the duration of time while the following conditions are met is longer than the time indicated, judge as NG.

Judgment Value

Malfunction Criteria	Threshold Value
Duty ratio of "ON"	≥ 0.25
Terminal output voltage	High

Time Needed for Diagnosis: 2500 ms
Malfunction Indicator Light Illumination: Illuminates when malfunction occurs in 2 continuous driving cycles.

- **Normality Judgment**

Judge as OK and clear the NG if the continuous time while the following conditions are established is more than the predetermined time.

Judgment Value

Malfunction Criteria	Threshold Value
Terminal output voltage	Low

Time Needed for Diagnosis: Less than 1 second

BU:DTC P0461 FUEL LEVEL SENSOR “A” CIRCUIT RANGE/PERFORMANCE

1. OUTLINE OF DIAGNOSIS

Detect malfunctions of the fuel level sensor output property.
If the fuel level does not vary in a particular driving condition / engine condition where it should, judge as NG.

2. COMPONENT DESCRIPTION

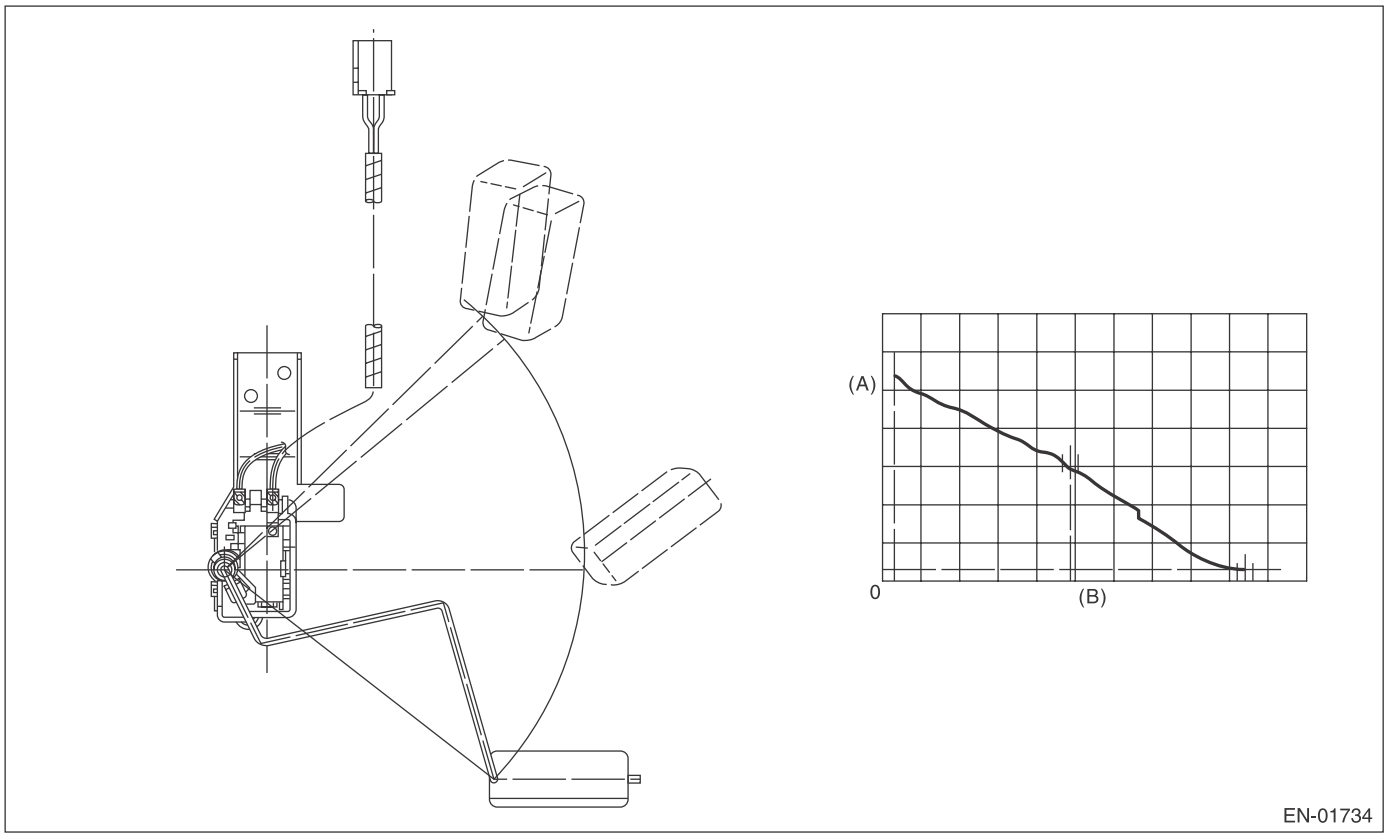

(A) Fuel level (B) Resistance

3. ENABLE CONDITION

Secondary Parameters	Enable Conditions
None	

4. GENERAL DRIVING CYCLE

Always perform the diagnosis continuously.

5. DIAGNOSTIC METHOD

• Abnormality Judgment

Judge as NG when the following conditions are established.

Judgment Value

Malfunction Criteria	Threshold Value
Accumulated amount of intake air	≥ 330957 g (11672.85 oz)
Max. – min. values of fuel level output	< 2.6 ℓ (0.69 US gal, 0.57 Imp gal)
Battery voltage	≥ 10.9 V
Engine speed	< 4000 rpm
Elapsed time after starting the engine	≥ 5000 ms

Time Needed for Diagnosis: Less than 1 second
Malfunction Indicator Light Illumination: Illuminates when malfunction occurs in 2 continuous driving cycles.

• Normality Judgment

Judge as OK and clear the NG if the following conditions are established.

Judgment Value

Malfunction Criteria	Threshold Value
Accumulated amount of intake air	≥ 330957 g (11672.85 oz)
Max. – min. values of fuel level output	≥ 2.6 ℓ (0.69 US gal, 0.57 Imp gal)
Battery voltage	≥ 10.9 V
Engine speed	< 4000 rpm
Elapsed time after starting the engine	≥ 5000 ms

Time Needed for Diagnosis: Less than 1 second

BV:DTC P0462 FUEL LEVEL SENSOR “A” CIRCUIT LOW

1. OUTLINE OF DIAGNOSIS

Detect the open or short circuit of fuel level sensor. Judge as NG if out of specification.

2. COMPONENT DESCRIPTION

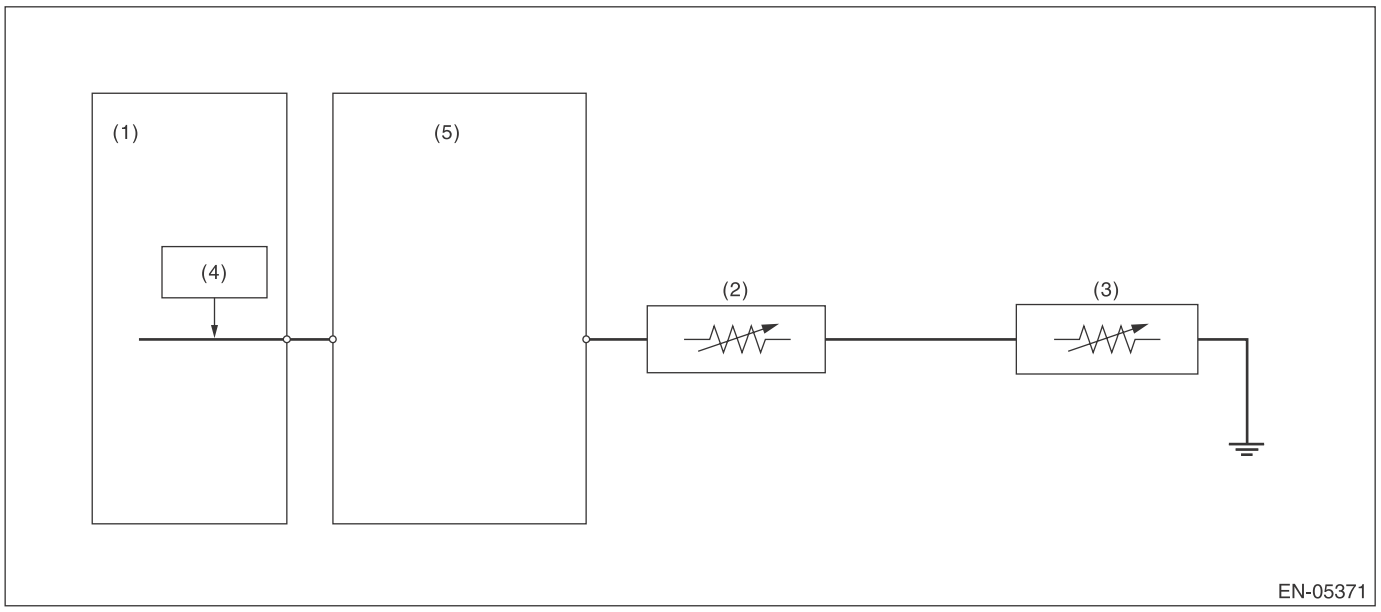

(1) Engine control module (ECM)
(2) Fuel level sensor
(3) Fuel sub level sensor
(4) Detecting circuit
(5) Body integrated unit

3. ENABLE CONDITION

Secondary Parameters	Enable Conditions
None	

4. GENERAL DRIVING CYCLE

Always perform the diagnosis continuously.

5. DIAGNOSTIC METHOD

• Abnormality Judgment

If the duration of time while the following conditions are met is longer than the time indicated, judge as NG.

Judgment Value

Malfunction Criteria	Threshold Value
Battery voltage	≥ 10.9 V
Elapsed time after starting the engine	≥ 3000 ms
Output voltage	< 0.173 V

Time Needed for Diagnosis: 2500 ms
Malfunction Indicator Light Illumination: Illuminates when malfunction occurs in 2 continuous driving cycles.

• Normality Judgment

Judge as OK and clear the NG if the continuous time while the following conditions are established is more than the predetermined time.

Judgment Value

Malfunction Criteria	Threshold Value
Battery voltage	≥ 10.9 V
Elapsed time after starting the engine	≥ 3000 ms
Output voltage	≥ 0.173 V

Time Needed for Diagnosis: Less than 1 second

BW:DTC P0463 FUEL LEVEL SENSOR “A” CIRCUIT HIGH

1. OUTLINE OF DIAGNOSIS

Detect the open or short circuit of fuel level sensor. Judge as NG if out of specification.

2. COMPONENT DESCRIPTION

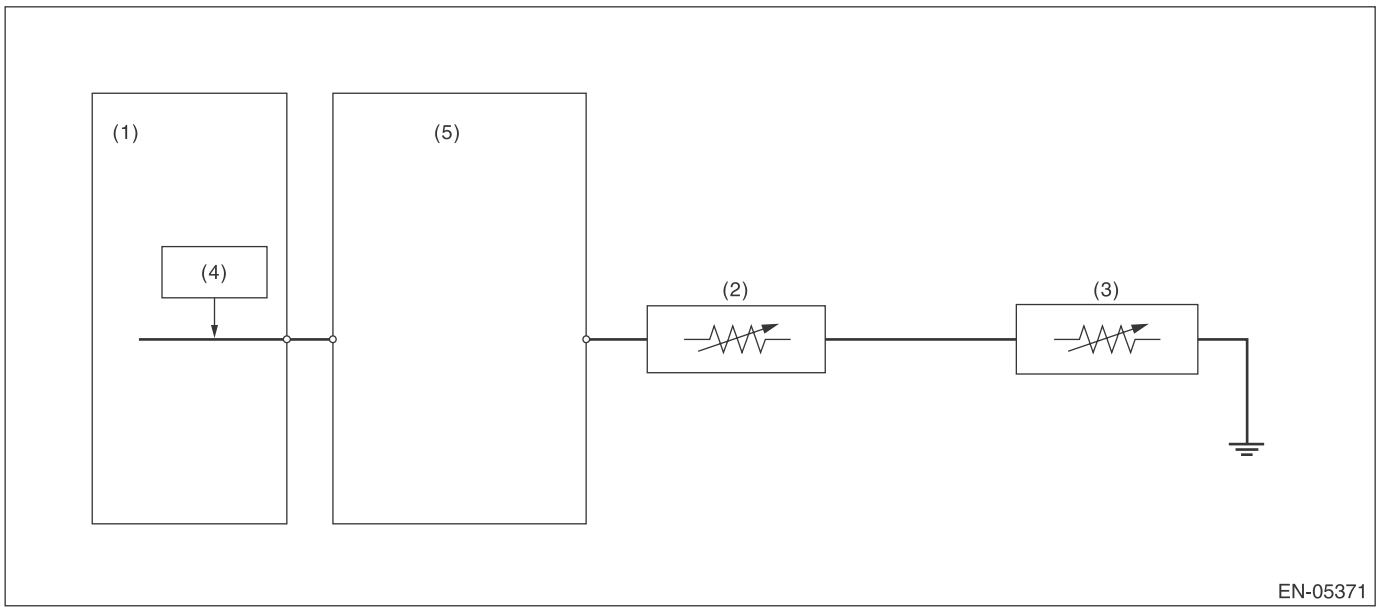

(1) Engine control module (ECM)
(2) Fuel level sensor
(3) Fuel sub level sensor
(4) Detecting circuit
(5) Body integrated unit

3. ENABLE CONDITION

Secondary Parameters	Enable Conditions
None	

4. GENERAL DRIVING CYCLE

Always perform the diagnosis continuously.

5. DIAGNOSTIC METHOD

• Abnormality Judgment

If the duration of time while the following conditions are met is longer than the time indicated, judge as NG.

Judgment Value

Malfunction Criteria	Threshold Value
Battery voltage	≥ 10.9 V
Elapsed time after starting the engine	≥ 3000 ms
Output voltage	≥ 7.212 V

Time Needed for Diagnosis: 1000 ms
Malfunction Indicator Light Illumination: Illuminates when malfunction occurs in 2 continuous driving cycles.

• Normality Judgment

Judge as OK and clear the NG if the continuous time while the following conditions are established is more than the predetermined time.

Judgment Value

Malfunction Criteria	Threshold Value
Battery voltage	≥ 10.9 V
Elapsed time after starting the engine	≥ 3000 ms
Output voltage	< 7.212 V

Time Needed for Diagnosis: Less than 1 second

BX:DTC P0464 FUEL LEVEL SENSOR CIRCUIT INTERMITTENT

1. OUTLINE OF DIAGNOSIS

Detect the unstable output faults from the fuel level sensor caused by noise. Judge as NG when the max. value and cumulative value of output voltage variation of the fuel level sensor is larger than the threshold value.

2. ENABLE CONDITION

Malfunction Criteria	Threshold Value
Engine speed	≥ 500 rpm
Elapsed time after starting the engine	≥ 1 second
Battery voltage	≥ 10.9 V
Idle switch	ON
Fuel level	≥ 10.5 ℓ (2.77 US gal, 2.31 Imp gal) and < 59.5 ℓ (15.72 US gal, 13.09 Imp gal)
Vehicle speed = 0 km/h (0 MPH)	≥ 10000 ms

3. GENERAL DRIVING CYCLE

- Always perform the diagnosis continuously at idle speed.
- Pay attention to the fuel level.

4. DIAGNOSTIC METHOD

Calculate the Max. value (DELFLMAX) and cumulative value (SUMFL) of output voltage variation of fuel level sensor during 12.2 seconds. Judge it normal when both max. and cumulative values are not over the threshold value. Otherwise, when either of them is over the threshold value, the diagnosis counter counts up. Judge as NG if the counter indicated 4 time(s).

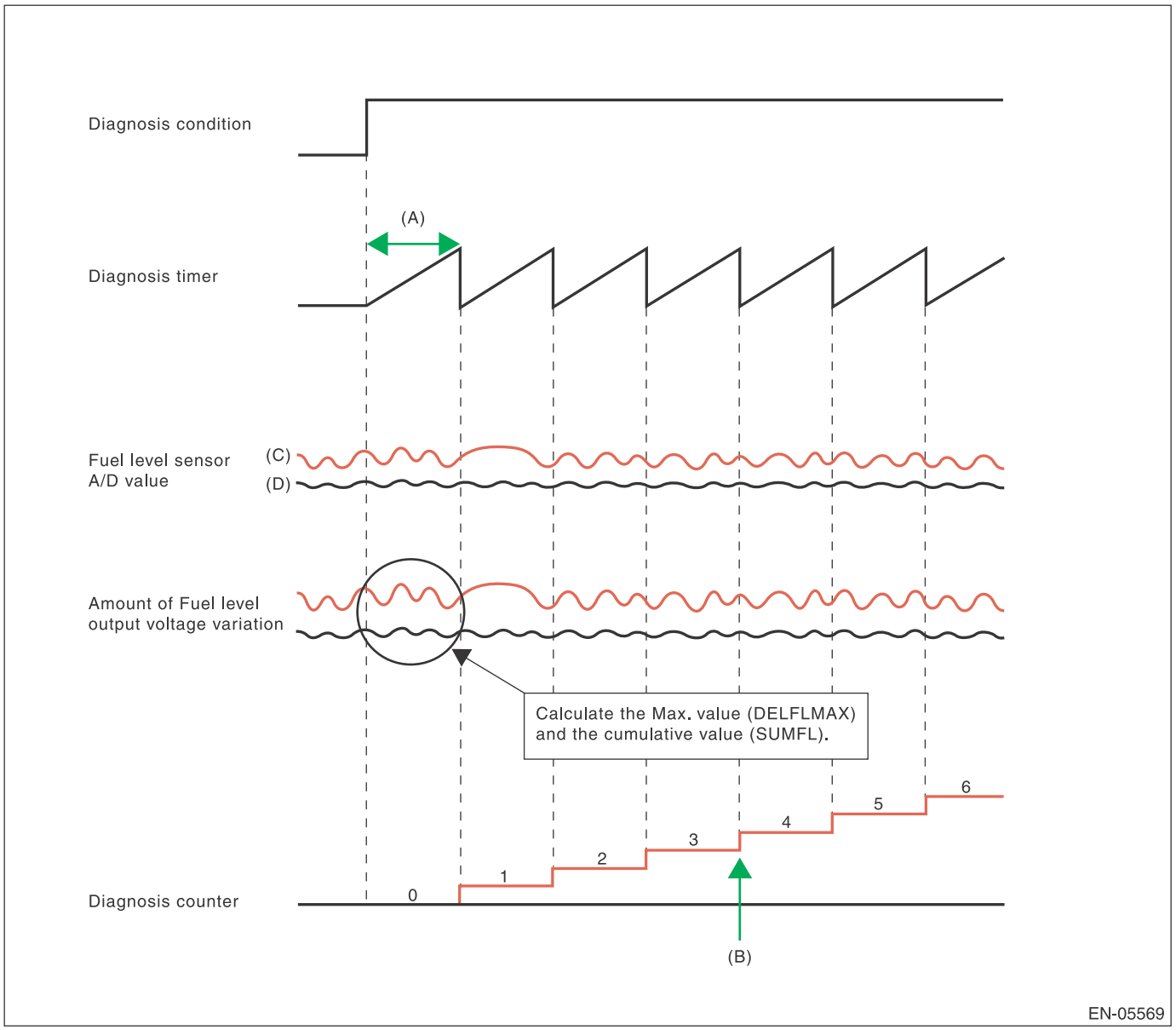

(A) 12288 ms
(B) NG at 4 time(s) counts
(C) Malfunction
(D) Normal

- **Abnormality Judgment**

If the duration of time while the following conditions are met is longer than the time indicated, judge as NG.

Judgment Value

Malfunction Criteria	Threshold Value
Integrated times of the condition reaching follows,	≥ 4 time(s)
DELFLMAX	≥ Value from Map
or	
SUMFL	≥ 23.8 V
At this time,	
DELFLMAX: Maximum difference of sensor output for 12288 ms	
SUMFL: Integrated value of the sensor output deviation for12288 ms	

Map

Fuel level (ℓ , US gal, Imp gal)	10, 2.64, 2.2	20, 5.28, 4.4	25, 6.61, 5.5	30, 7.93, 6.6	43, 11.36, 9.46	45, 11.89, 9.9	50, 13.21, 11
Measured voltage (V)	0.248	0.519	0.796	0.6	1.025	1.069	1.402

The diagnosis counter does not count up when the following conditions are completed within 12288 ms.

Maximum value – minimum value of change of tank pressure during 12288 ms	≥ 0 kPa (0.375 mmHg, 0 inHg)
Maximum value – minimum value of battery voltage during 12288 ms	≥ 0.969 V

Time Needed for Diagnosis: 12288 ms × 4 time(s)
Malfunction Indicator Light Illumination: Illuminates when malfunction occurs in 2 continuous driving cycles.

- **Normality Judgment**

Judge as OK and clear the NG if the continuous time while the following conditions are established is more than the predetermined time.

Judgment Value

Malfunction Criteria	Threshold Value
DELFLMAX	< Value from Map
SUMFL	< 23.8 V
At this time,	
DELFLMAX: Maximum difference of sensor output for 12288 ms	
SUMFL: Integrated value of the sensor output deviation for12288 ms	

Time Needed for Diagnosis: 12288 ms

BY:DTC P0500 VEHICLE SPEED SENSOR “A”

1. OUTLINE OF DIAGNOSIS

Judge as NG when outside of the judgment value.
Judge NG when the received data from VDCCM&H/U is abnormal vehicle speed, and the vehicle speed data is impossible.

2. COMPONENT DESCRIPTION

Vehicle speed signals are taken in to the VDC control module and hydraulic control unit, and normal/erroneous data of the ABS wheel speed sensor is received by CAN communication from the VDC control module and hydraulic control unit.

3. ENABLE CONDITION

Secondary Parameters	Enable Conditions
Battery voltage	≥ 10.9 V
Elapsed time after starting the engine	≥ 2000 ms

4. GENERAL DRIVING CYCLE

Always perform diagnosis more than 2000 ms after starting the engine.

5. DIAGNOSTIC METHOD

- **Abnormality Judgment**

If the duration of time while the following conditions are met is longer than the time indicated, judge as NG.

Judgment Value

Malfunction Criteria	Threshold Value
Front ABS wheel speed sensor status	Malfunction
Either of the following is established	
Front left wheel speed	≥ 300 km/h (186.4 MPH)
Front right wheel speed	≥ 300 km/h (186.4 MPH)

Time Needed for Diagnosis: 2500 ms
Malfunction Indicator Light Illumination: Illuminates as soon as a malfunction occurs.

- **Normality Judgment**

Judge as OK and clear the NG if the continuous time while the following conditions are established is more than the predetermined time.

Judgment Value

Malfunction Criteria	Threshold Value
Front left wheel speed	> 0 km/h (0 MPH) and < 300 km/h (186.4 MPH)
Front right wheel speed	> 0 km/h (0 MPH) and < 300 km/h (186.4 MPH)

Time Needed for Diagnosis: 2500 ms

BZ:DTC P0506 IDLE AIR CONTROL SYSTEM RPM LOWER THAN EXPECTED

1. OUTLINE OF DIAGNOSIS

Detect the malfunction that actual engine speed is not close to target engine speed during idling. Judge as NG when actual engine speed is not close to target engine speed during idling.

2. ENABLE CONDITION

Secondary Parameters	Enable Conditions
Engine coolant temperature	≥ 72 °C (161.6 °F)
Battery voltage	≥ 10.9 V
Atmospheric pressure	≥ 75 kPa (563 mmHg, 22.2 inHg)
Fuel level	≥ 10.5 ℓ (2.77 US gal, 2.31 Imp gal)
Elapsed time after starting the engine	≥ 10.49 s
Feedback of ISC	In operation
Lambda value (left and right)	≥ 0.9 and < 1.1
After switching air conditioner to ON/OFF	≥ 5.1 s
After intake manifold pressure changes by 4 kPa (30 mmHg, 1.2 inHg) or more.	> 5.1 s
Elapsed time after switching neutral position switch to ON/OFF	> 5.1 s
Vehicle speed	0 km/h (0 MPH)

3. GENERAL DRIVING CYCLE

Perform the diagnosis continuously at idling after warming up engine.

4. DIAGNOSTIC METHOD

- **Abnormality Judgment**

If the duration of time while the following conditions are met is longer than the time indicated, judge as NG.

Judgment Value

Malfunction Criteria	Threshold Value
Actual engine speed — Targeted engine speed	< –100 rpm
Feedback compensation for ISC	Max.

Time Needed for Diagnosis: 10 s × 3 time(s)
Malfunction Indicator Light Illumination: Illuminates when malfunction occurs in 2 continuous driving cycles.

- **Normality Judgment**

Judge as OK and clear the NG if the continuous time while the following conditions are established is more than the predetermined time.

Judgment Value

Malfunction Criteria	Threshold Value
Actual engine speed — Targeted engine speed	≥ –100 rpm

Time Needed for Diagnosis: 10 s

CA:DTC P0507 IDLE AIR CONTROL SYSTEM RPM HIGHER THAN EXPECTED

1. OUTLINE OF DIAGNOSIS

Detect the malfunction that actual engine speed is not close to target engine speed during idling. Judge as NG when actual engine speed is not close to target engine speed during idling.

2. ENABLE CONDITION

Secondary Parameters	Enable Conditions
Engine coolant temperature	≥ 72 °C (161.6 °F)
Battery voltage	≥ 10.9 V
Atmospheric pressure	≥ 75 kPa (563 mmHg, 22.2 inHg)
Fuel level	≥ 10.5 ℓ (2.77 US gal, 2.31 Imp gal)
Elapsed time after starting the engine	≥ 10.49 s
Feedback of ISC	In operation
Lambda value (left and right)	≥ 0.9 and < 1.1
After switching air conditioner to ON/OFF	≥ 5.1 s
After intake manifold pressure changes by 4 kPa (30 mmHg, 1.2 inHg) or more.	> 5.1 s
Elapsed time after switching neutral position switch to ON/OFF	> 5.1 s
Vehicle speed	0 km/h (0 MPH)

3. GENERAL DRIVING CYCLE

Perform the diagnosis continuously at idling after warming up engine.

4. DIAGNOSTIC METHOD

- **Abnormality Judgment**

If the duration of time while the following conditions are met is longer than the time indicated, judge as NG.

Judgment Value

Malfunction Criteria	Threshold Value
Actual – Target engine speed	≥ 200 rpm
Feedback compensation for ISC	Min.

Time Needed for Diagnosis: 10 s × 3 time(s)
Malfunction Indicator Light Illumination: Illuminates when malfunction occurs in 2 continuous driving cycles.

- **Normality Judgment**

Judge as OK and clear the NG if the continuous time while the following conditions are established is more than the predetermined time.

Judgment Value

Malfunction Criteria	Threshold Value
Actual – Target engine speed	< 200 rpm

Time Needed for Diagnosis: 10 s

CB:DTC P0512 STARTER REQUEST CIRCUIT

1. OUTLINE OF DIAGNOSIS

Detect the open or short circuit of starter SW.
Judge as ON NG when the starter SW signal remains ON.

2. ENABLE CONDITION

Secondary Parameters	Enable Conditions
None	

3. GENERAL DRIVING CYCLE

Always perform the diagnosis continuously.

4. DIAGNOSTIC METHOD

- **Abnormality Judgment**

If the duration of time while the following conditions are met is longer than the time indicated, judge as NG.

Judgment Value

Malfunction Criteria	Threshold Value
Engine condition	After engine starting
Starter OFF signal	Not detected
Battery voltage	≥ 8 V

Time Needed for Diagnosis: 180000 ms
Malfunction Indicator Light Illumination: Illuminates when malfunction occurs in 2 continuous driving cycles.

- **Normality Judgment**

Judge as OK and clear the NG if the continuous time while the following conditions are established is more than the predetermined time.

Judgment Value

Malfunction Criteria	Threshold Value
Starter OFF signal	Detected
Battery voltage	≥ 8 V

Time Needed for Diagnosis: Less than 1 second

CC:DTC P0513 INCORRECT IMMOBILIZER KEY

1. OUTLINE OF DIAGNOSIS

DTC	Item	Outline of Diagnosis
P0513	Incorrect Immobilizer Key	Incorrect immobilizer key (Use of unregistered key in body integrated unit)
P1570	Antenna	Faulty antenna
P1571	Reference Code Incompatibility	Reference code incompatibility between body integrated unit and ECM
P1572	IMM Circuit Failure (Except Antenna Circuit)	Communication failure between body integrated unit and ECM
P1574	Key Communication Failure	Failure of body integrated unit to verify key (transponder) ID code or transponder failure
P1576	EGI Control Module EEPROM	ECM malfunctioning
P1577	IMM Control Module EEPROM	Body integrated unit malfunctioning
P1578	Meter Failure	Reference code incompatibility between body integrated unit and combination meter

2. ENABLE CONDITION

When starting the engine.

3. GENERAL DRIVING CYCLE

Perform the diagnosis only after starting the engine.

4. DIAGNOSTIC METHOD

Judge as NG when the conditions for the outline of the diagnosis of the top are established.

CD:DTC P0604 INTERNAL CONTROL MODULE RANDOM ACCESS MEMORY (RAM) ERROR

1. OUTLINE OF DIAGNOSIS

Detect the malfunction of microcomputer (RAM).
When there is a problem in the main CPU normal RAM, or the sub CPU normal RAM, judge as NG. Judge as OK when both are operating properly.
If it is possible to write data to the whole area of RAM in the initial routine, and is possible to read the same data, it is judged as OK, and if not, NG.

2. ENABLE CONDITION

Secondary Parameters	Enable Conditions
None	

Diagnosis with the initial routine.

3. GENERAL DRIVING CYCLE

Perform the diagnosis as soon as the ignition switch is turned to ON.

4. DIAGNOSTIC METHOD

- **Abnormality Judgment**

Judge as NG when the following conditions are established.

Judgment Value

Malfunction Criteria	Threshold Value
Write the specified value to RAM and then read.	The written value cannot be read.

Time Needed for Diagnosis: Less than 1 second
Malfunction Indicator Light Illumination: Illuminates as soon as a malfunction occurs.

- **Normality Judgment**

Judge as OK and clear the NG if the following conditions are established.

Judgment Value

Malfunction Criteria	Threshold Value
Write the specified value to RAM and then read.	The written value can be read.

Time Needed for Diagnosis: Less than 1 second

CE:DTC P0605 INTERNAL CONTROL MODULE READ ONLY MEMORY (ROM) ERROR

1. OUTLINE OF DIAGNOSIS

Judge as NG when SUM value of ROM is outside the standard value.

2. ENABLE CONDITION

Secondary Parameters	Enable Conditions
Ignition switch	ON

3. GENERAL DRIVING CYCLE

Always perform the diagnosis continuously.

4. DIAGNOSTIC METHOD

Abnormality Judgment

Judge as NG if the criteria below are met.

Judgment Value

Malfunction Criteria	Threshold Value
SUM value of ROM	Standard

Time Needed for Diagnosis: Undetermined
Malfunction Indicator Light Illumination: Illuminates as soon as a malfunction occurs.

CF:DTC P0607 THROTTLE CONTROL SYSTEM CIRCUIT RANGE/PERFORMANCE

1. OUTLINE OF DIAGNOSIS

Judge as NG when any one of the followings is established.
(1) Monitoring IC operates abnormally. (Monitoring IC malfunction)
(2) Input amplifier circuit of throttle position sensor 1 operates abnormally. (fourfold amplifier malfunction)
(3) CPU operates abnormally. (Instruction/flow check)
(4) A/D converter operates abnormally. (ADC malfunction)
(5) EEPROM operates abnormally. (EEPROM malfunction)
(6) Output IC operates abnormally. (Output driver malfunction)

2. COMPONENT DESCRIPTION

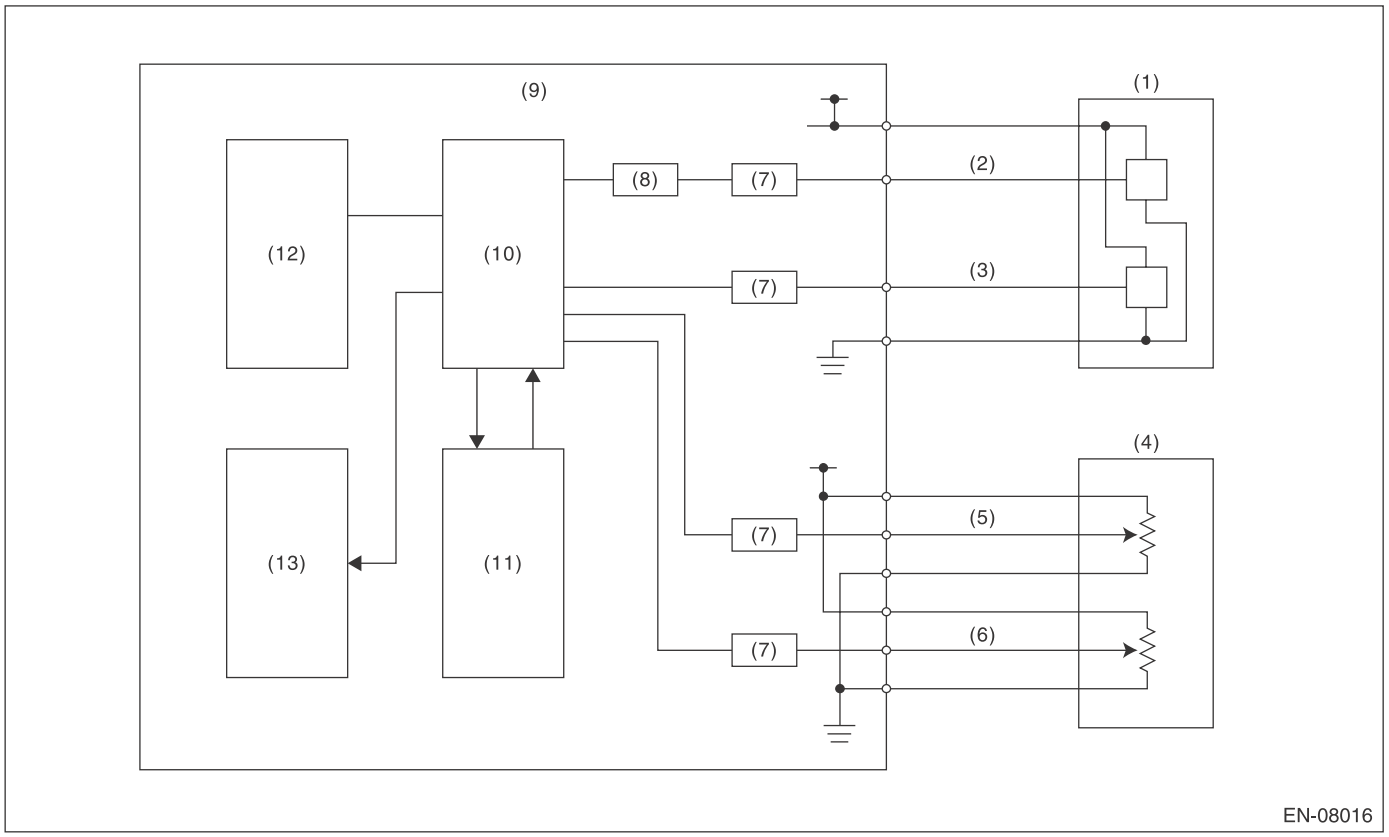

(1)	Throttle position sensor	(6)	Accelerator pedal position sensor 2	(10)	CPU
(2)	Throttle position sensor 1	(7)	I/F circuit	(11)	Monitoring IC
(3)	Throttle position sensor 2	(8)	Amplifier circuit	(12)	EEPROM
(4)	Accelerator pedal position sensor	(9)	Engine control module (ECM)	(13)	Output IC
(5)	Accelerator pedal position sensor 1				

3. ENABLE CONDITION

Secondary Parameters	Enable Conditions
(1) Battery voltage	≥ 6 V
(2) Ignition switch	ON
(2) Battery voltage	≥ 6 V
(3) Ignition switch	ON
(3) ETC control	Permitted
(4) Ignition switch	ON
(4) Battery voltage	≥ 6 V
(5) Starter switch	OFF
(5) Battery voltage	> 6 V
(6) Ignition switch	ON
(6) Battery voltage	≥ 10.9 V

4. GENERAL DRIVING CYCLE

Always perform the diagnosis continuously.

5. DIAGNOSTIC METHOD

Judge as OK and clear the NG when the malfunction criteria below are met.

Judgment Value

Malfunction Criteria	Threshold Value
(1) Monitoring IC operation	The result and estimated value match.
(2) | Throttle position sensor 1 opening angle – (Throttle position sensor 1 opening angle after passing amplifier)/4 |	< 3 °
(3) Main CPU calculation result	The result and estimated value match.
(4) | Standard voltage – Voltage reading |	< 0.078125 V
(5) EEPROM writing	Writing completed
(6) Communication with output IC	Possible to communicate

Time Needed for Diagnosis:
(1): 200 ms
(2): 24 ms
(3): 192 ms
(4): 200 ms
(5): 48 ms
(6): 2500 ms
Malfunction Indicator Light Illumination: Illuminates as soon as a malfunction occurs.

CG:DTC P0638 THROTTLE ACTUATOR CONTROL RANGE/PERFORMANCE (BANK 1)

1. OUTLINE OF DIAGNOSIS

Judge as NG when the target opening angle and actual opening angle is mismatched or the current to motor is the specified duty or more for specified time continuously.

2. COMPONENT DESCRIPTION

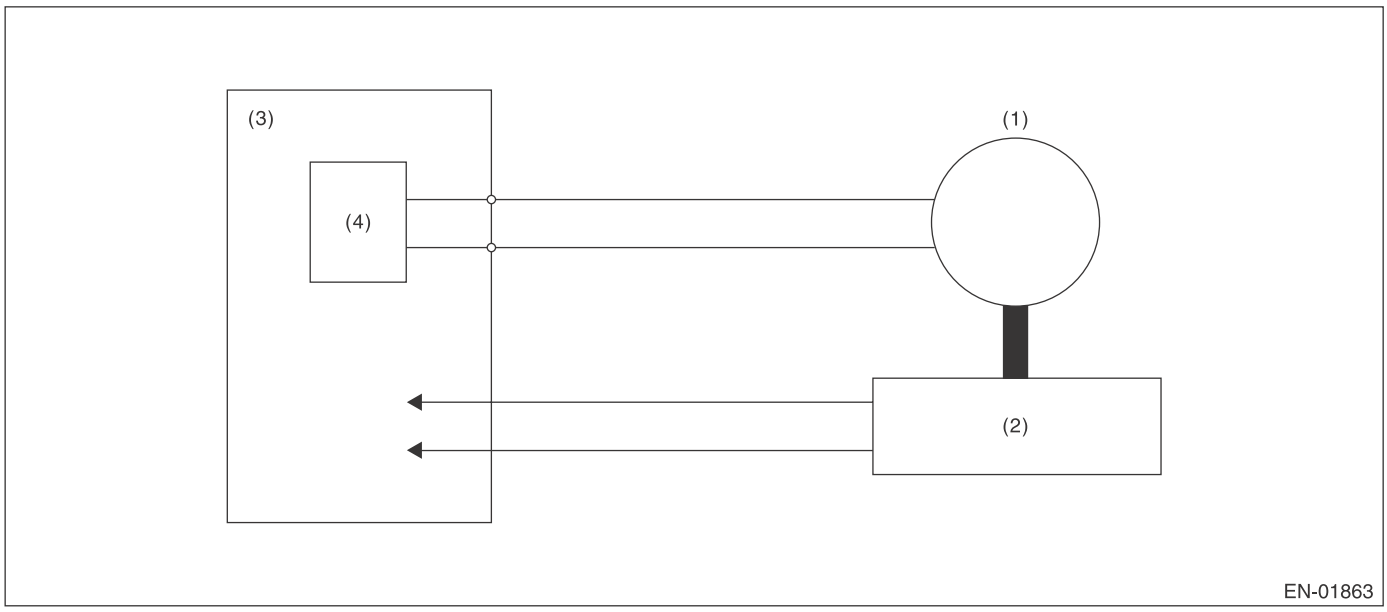

(1) Motor
(2) Throttle position sensor
(3) Engine control module (ECM)
(4) Drive circuit

3. ENABLE CONDITION

Secondary Parameters	Enable Conditions
Ignition switch	ON
Normal operation of electronic throttle control	ON

4. GENERAL DRIVING CYCLE

Always perform the diagnosis continuously when the electronic throttle control is operating.

5. DIAGNOSTIC METHOD

Judge as OK and clear the NG when the malfunction criteria below are met.

Judgment Value

Malfunction Criteria	Threshold Value
Difference between target opening angle and actual opening angle	Within the OK range of **judgment value detail**
Output duty to drive circuit	< 95 %

Time Needed for Diagnosis:

- Difference between target opening angle and actual opening angle:
  - NG judgment: Refer to the **judgment time detail.**
  - OK judgment: 2000 ms
- Output duty to drive circuit: 2000 ms

Diagnostic Trouble Code (DTC) Detecting Criteria

Details of Judgment Value

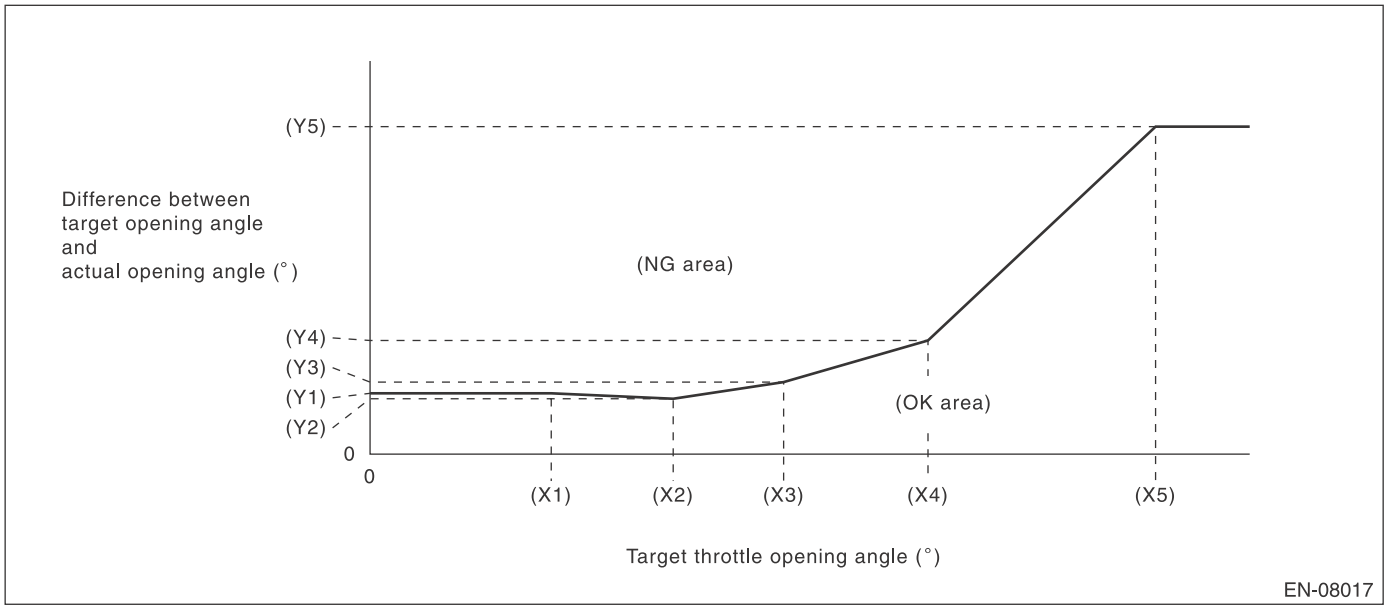

(X1) 6.915 °
(X2) 11.565 °
(X3) 15.785 °
(X4) 21.285 °
(X5) 29.965 °

(Y1) 4.65 °
(Y2) 4.22 °
(Y3) 5.5 °
(Y4) 8.68 °
(Y5) 25 °

Judgment time detail

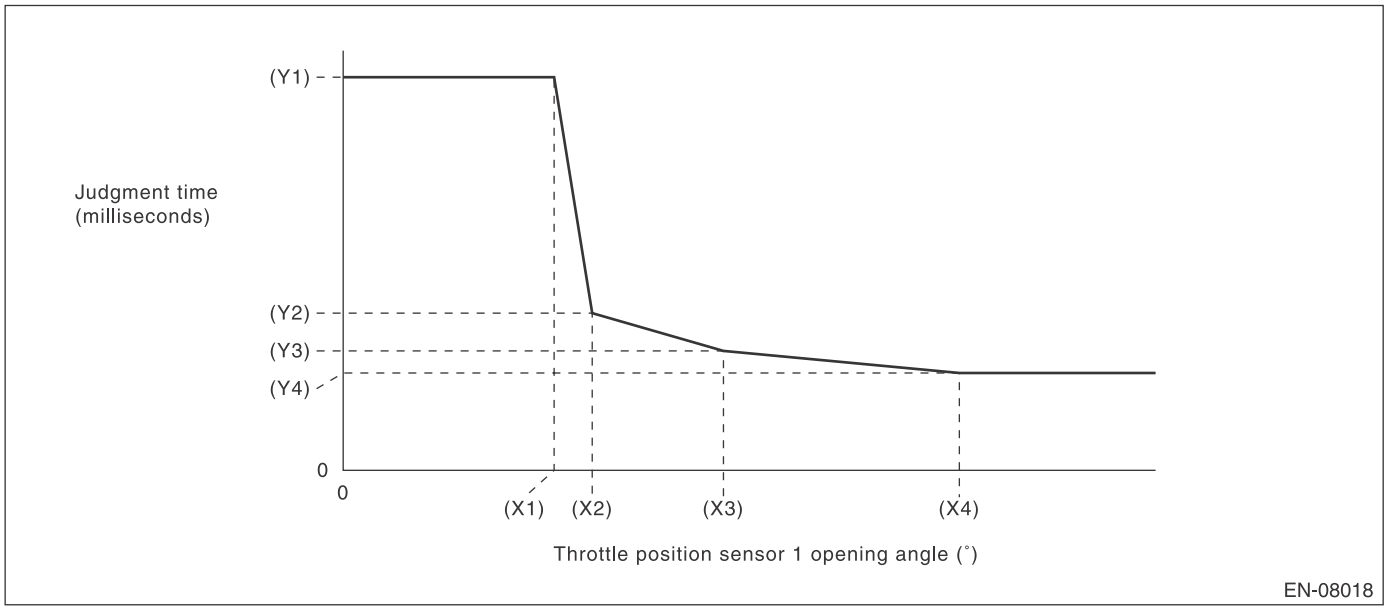

(X1) 8.049999237 °
(X2) 9.5 °
(X3) 14.5 °
(X4) 23.5 °

(Y1) 1000 ms
(Y2) 400 ms
(Y3) 304 ms
(Y4) 248 ms

NOTE:
Judgment time is constantly 1000 ms with Actual opening angle ≤ Target opening angle.
Malfunction Indicator Light Illumination: Illuminates as soon as a malfunction occurs.

CH:DTC P0851 NEUTRAL SWITCH INPUT CIRCUIT LOW (MT MODEL)

1. OUTLINE OF DIAGNOSIS

Detect the open or short circuit of neutral SW.
Judge as NG when there is no change in the neutral SW even if the driving shift was applied. (There is neutral SW ON/OFF inversion from the vehicle speed and engine speed.)

2. ENABLE CONDITION

Secondary Parameters	Enable Conditions
Battery voltage	≥ 10.9 V
Starter relay	OFF

3. GENERAL DRIVING CYCLE

Perform the diagnosis continuously in 2 seconds after starting the engine.

4. DIAGNOSTIC METHOD

- **Abnormality Judgment**

Judge NG when the malfunction criteria below are completed determined times or more after the neutral SW change.

Judgment Value

Malfunction Criteria	Threshold Value
Neutral switch signal (while changing from a to b below)	LOW (ON) continues.
Driving condition change	From a) to b)
a) Engine speed 600 rpm — 900 rpm & Vehicle speed = 0 km/h (0 MPH)	
b) Engine speed 1600 rpm — 2000 rpm & Vehicle speed ≥ 64 km/h (39.8 MPH)	

Time Needed for Diagnosis: 3 time(s)
Malfunction Indicator Light Illumination: Illuminates when malfunction occurs in 2 continuous driving cycles.

- **Normality Judgment**

Judge as OK and clear NG when there is change in the neutral SW.

Judgment Value

Malfunction Criteria	Threshold Value
Neutral switch signal (while changing from a to b below)	Changes to HIGH (OFF).
Driving condition change	From a) to b)
a) Engine speed 600 rpm — 900 rpm & Vehicle speed = 0 km/h (0 MPH)	
b) Engine speed 1600 rpm — 2000 rpm & Vehicle speed ≥ 64 km/h (39.8 MPH)	

Time Needed for Diagnosis: Less than 1 second

CI: DTC P0852 NEUTRAL SWITCH INPUT CIRCUIT HIGH (MT MODEL)

1. OUTLINE OF DIAGNOSIS

Detect the open or short circuit of neutral SW.
Judge as NG when there is no change in the neutral SW even if the driving shift was applied. (There is neutral SW ON/OFF inversion from the vehicle speed and engine speed.)

2. ENABLE CONDITION

Secondary Parameters	Enable Conditions
Battery voltage	≥ 10.9 V
Starter relay	OFF

3. GENERAL DRIVING CYCLE

Perform the diagnosis continuously in 2 seconds after starting the engine.

4. DIAGNOSTIC METHOD

- **Abnormality Judgment**

Judge NG when the malfunction criteria below are completed determined times or more after the neutral SW change.

Judgment Value

Malfunction Criteria	Threshold Value
Neutral switch signal (while changing from a to b below)	HIGH (OFF) continues.
Driving condition change	From a) to b)
a) Engine speed 600 rpm — 900 rpm & Vehicle speed = 0 km/h (0 MPH)	
b) Engine speed 1600 rpm — 2000 rpm & Vehicle speed ≥ 64 km/h (39.8 MPH)	

Time Needed for Diagnosis: 3 time(s)
Malfunction Indicator Light Illumination: Illuminates when malfunction occurs in 2 continuous driving cycles.

- **Normality Judgment**

Judge as OK and clear NG when there is change in the neutral SW.

Judgment Value

Malfunction Criteria	Threshold Value
Neutral switch signal (while changing from a to b below)	Changes to LOW (ON).
Driving condition change	From a) to b)
a) Engine speed 600 rpm — 900 rpm & Vehicle speed = 0 km/h (0 MPH)	
b) Engine speed 1600 rpm — 2000 rpm & Vehicle speed ≥ 64 km/h (39.8 MPH)	

Time Needed for Diagnosis: Less than 1 second

CJ:DTC P1152 O2 SENSOR CIRCUIT RANGE/PERFORMANCE (LOW) (BANK1 SENSOR1)

1. OUTLINE OF DIAGNOSIS

Detect that λ value remains low.
Judge as NG when lambda value is abnormal in accordance with λ value of front oxygen (A/F) sensor and running conditions such as vehicle speed, amount of intake air, engine coolant temperature, sub feedback control, etc.

λ value = Actual air fuel ratio/Theoretical air fuel ratio
λ > 1: Lean
λ < 1: Rich

2. COMPONENT DESCRIPTION

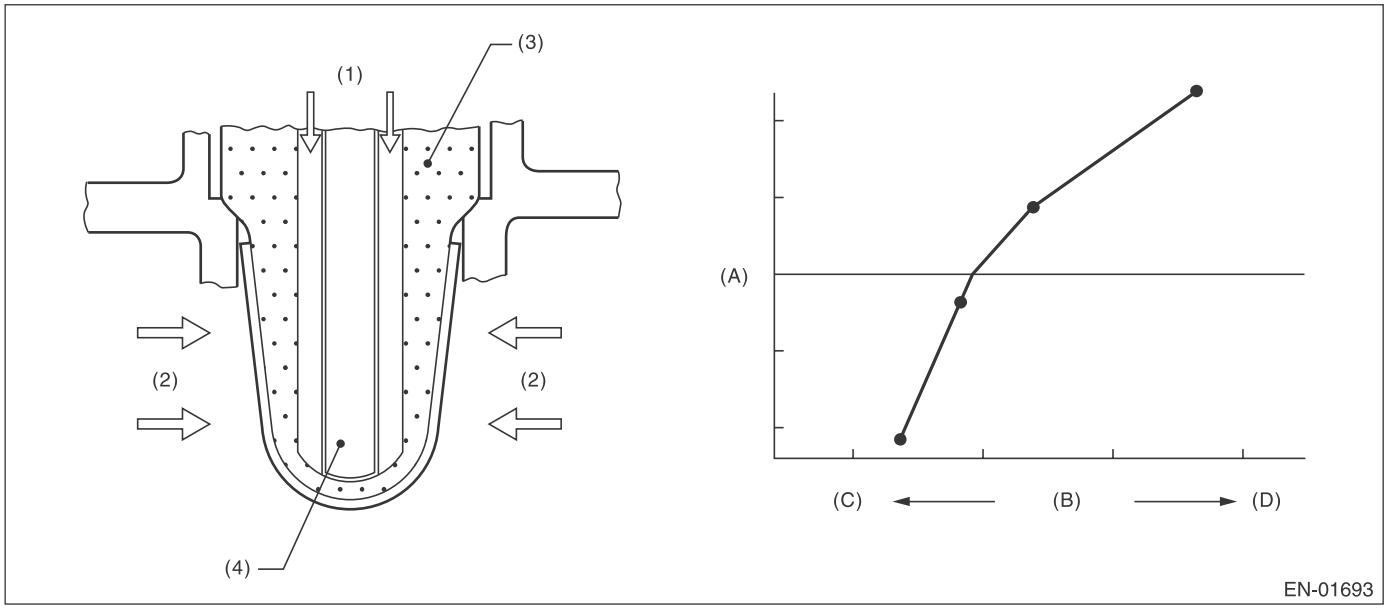

(A) Electromotive force
(B) Air fuel ratio
(C) Lean
(D) Rich

(1) Atmosphere
(2) Exhaust gas
(3) ZrO_2
(4) Ceramic heater

3. ENABLE CONDITION

Secondary Parameters	Enable Conditions
Time needed for all secondary parameters to be in enable conditions	≥ 4096 ms
Battery voltage	≥ 10.9 V
Atmospheric pressure	≥ 75 kPa (563 mmHg, 22.2 inHg)
Rear oxygen sensor sub feedback	Execution
Rear oxygen sensor output voltage – Feedback target voltage	–0.2 V — 0.1 V
or rear oxygen sensor sub feedback compensation coefficient	On Min.
or rear oxygen sensor sub feedback compensation coefficient	On Max.
Elapsed time after starting the engine	≥ 60000 ms
Engine coolant temperature	≥ 72 °C (161.6 °F)
Vehicle speed	≥ 20 km/h (12.4 MPH)
Amount of intake air	≥ 6 g/s (0.21 oz/s)
Load change at 180° CA	< 0.02 g/rev (0 oz/rev)
Front oxygen (A/F) sensor impedance	0 Ω — 50 Ω
Learning value of evaporation gas density	< 0.2
Total time of operating canister purge	≥ 19.9 s
Targeted lambda value load compensation coefficient	–1 — 1

4. GENERAL DRIVING CYCLE

Perform diagnosis continuously at a constant speed of 20 km/h (12.4 MPH) or more after 60000 ms have passed since the engine started.

5. DIAGNOSTIC METHOD

- **Abnormality Judgment**

If the duration of time while the following conditions are met is longer than the time indicated, judge as NG.

Judgment Value

Malfunction Criteria	Threshold Value
λ value	< 0.85

Time Needed for Diagnosis: 10000 ms
Malfunction Indicator Light Illumination: Illuminates when malfunction occurs in 2 continuous driving cycles.

- **Normality Judgment**

Judge as OK and clear the NG if the continuous time while the following conditions are established is more than the predetermined time.

Judgment Value

Malfunction Criteria	Threshold Value
λ value	≥ 0.85

Time Needed for Diagnosis: Less than 1 second

CK:DTC P1153 O2 SENSOR CIRCUIT RANGE/PERFORMANCE (HIGH) (BANK1 SENSOR1)

1. OUTLINE OF DIAGNOSIS

Detect that λ value remains high.
Judge as NG when lambda value is abnormal in accordance with λ value of front oxygen (A/F) sensor and running conditions such as vehicle speed, amount of intake air, engine coolant temperature, sub feedback control, etc.

λ value = Actual air fuel ratio/Theoretical air fuel ratio
λ > 1: Lean
λ < 1: Rich

2. COMPONENT DESCRIPTION

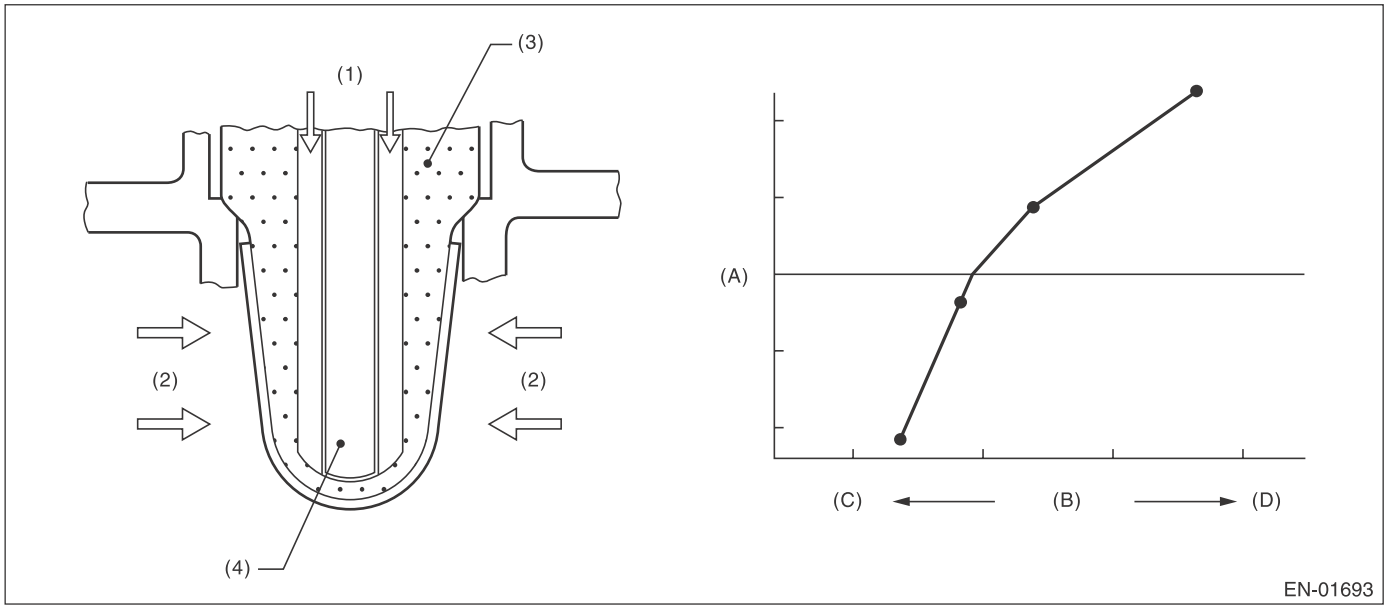

(A) Electromotive force
(B) Air fuel ratio
(C) Lean
(D) Rich

(1) Atmosphere
(2) Exhaust gas
(3) ZrO_2
(4) Ceramic heater

3. ENABLE CONDITION

Secondary Parameters	Enable Conditions
Time needed for all secondary parameters to be in enable conditions	≥ 4096 ms
Battery voltage	≥ 10.9 V
Atmospheric pressure	≥ 75 kPa (563 mmHg, 22.2 inHg)
Rear oxygen sensor sub feedback	Execution
Rear oxygen sensor output voltage – Feedback target voltage	–0.2 V — 0.1 V
or rear oxygen sensor sub feedback compensation coefficient	On Min.
or rear oxygen sensor sub feedback compensation coefficient	On Max.
Elapsed time after starting the engine	≥ 60000 ms
Engine coolant temperature	≥ 72 °C (161.6 °F)
Vehicle speed	≥ 20 km/h (12.4 MPH)
Amount of intake air	≥ 6 g/s (0.21 oz/s)
Load change at 180° CA	< 0.02 g/rev (0 oz/rev)
Front oxygen (A/F) sensor impedance	0 Ω — 50 Ω
Learning value of evaporation gas density	< 0.2
Total time of operating canister purge	≥ 19.9 s
Targeted lambda value load compensation coefficient	–1 — 1

4. GENERAL DRIVING CYCLE

Perform diagnosis continuously at a constant speed of 20 km/h (12.4 MPH) or more after 60000 ms have passed since the engine started.

5. DIAGNOSTIC METHOD

- **Abnormality Judgment**

If the duration of time while the following conditions are met is longer than the time indicated, judge as NG.

Judgment Value

Malfunction Criteria	Threshold Value
λ value	> 1.15

Time Needed for Diagnosis: 10000 ms
Malfunction Indicator Light Illumination: Illuminates when malfunction occurs in 2 continuous driving cycles.

- **Normality Judgment**

Judge as OK and clear the NG if the continuous time while the following conditions are established is more than the predetermined time.

Judgment Value

Malfunction Criteria	Threshold Value
λ value	≤ 1.15

Time Needed for Diagnosis: Less than 1 second

CL:DTC P1160 RETURN SPRING FAILURE

1. OUTLINE OF DIAGNOSIS

Judge as NG when the valve is opened more than the default opening angle, but does not move to the close direction with the motor power stopped.

2. COMPONENT DESCRIPTION

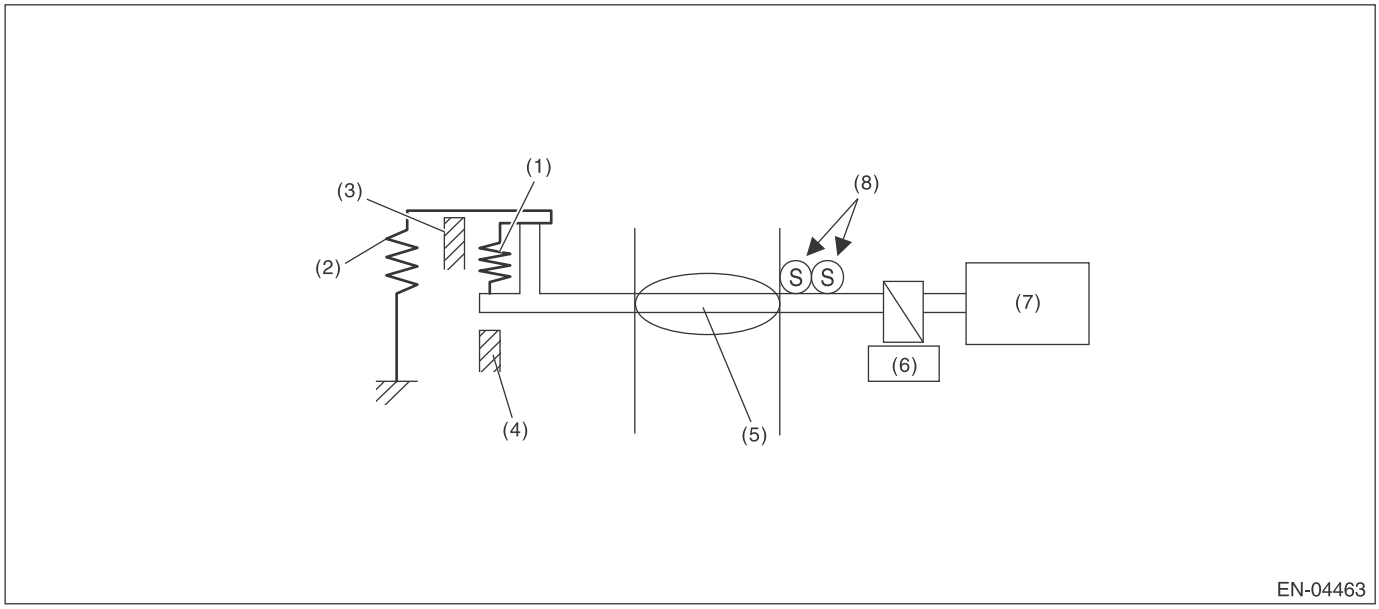

(1) Opener spring
(2) Return spring
(3) Intermediate stopper
(4) Full closed stopper
(5) Throttle valve
(6) Gear
(7) DC motor
(8) Main and sub throttle position sensor

3. ENABLE CONDITION

Secondary Parameters	Enable Conditions
Battery voltage	≥ 6 V
Throttle position sensor	Normal

4. GENERAL DRIVING CYCLE

- Ignition switch ON → OFF
- Ignition switch OFF → ON (Only after clearing memory)

5. DIAGNOSTIC METHOD

- **Abnormality Judgment**

Judge as NG when the following conditions are established.

Judgment Value

Malfunction Criteria	Threshold Value
Opening variation after continuity is set to OFF	< 2 °

Time Needed for Diagnosis: 24 ms
Malfunction Indicator Light Illumination: Illuminates as soon as a malfunction occurs.

- **Normality Judgment**

Judge as OK and clear the NG if the following conditions are established.

Judgment Value

Malfunction Criteria	Threshold Value
Opening variation after continuity is set to OFF	≥ 2 °

Time Needed for Diagnosis: 3400 ms

CM:DTC P1400 FUEL TANK PRESSURE CONTROL SOLENOID VALVE CIRCUIT LOW

1. OUTLINE OF DIAGNOSIS

Detect the open/short circuit of pressure control solenoid valve.
Judge as NG when ECM output level is different from actual terminal level.

2. COMPONENT DESCRIPTION

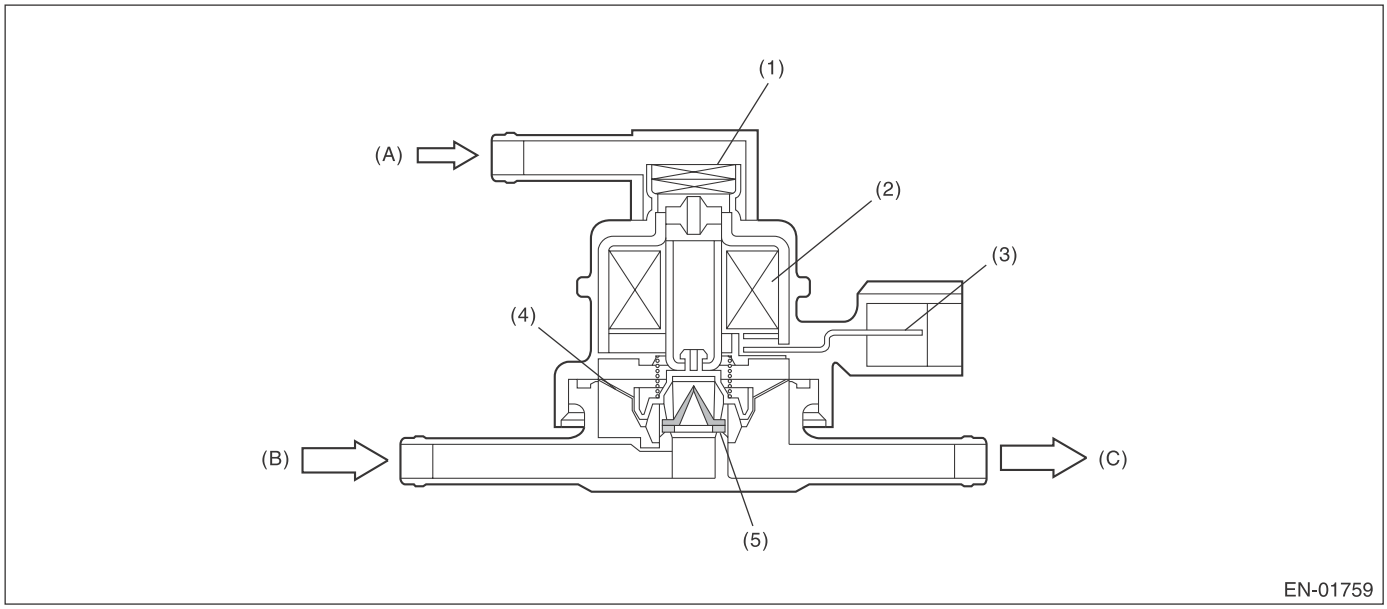

(A)	Atmospheric pressure	(B)	Shut-off valve	(C)	To fuel tank
(1)	Filter	(3)	Connector terminal	(5)	Valve
(2)	Coil	(4)	Diaphragm		

3. ENABLE CONDITION

Secondary Parameters	Enable Conditions
None	

4. GENERAL DRIVING CYCLE

Always perform the diagnosis after starting the engine.

5. DIAGNOSTIC METHOD

• Abnormality Judgment

If the duration of time while the following conditions are met is longer than the time indicated, judge as NG.

Judgment Value

Malfunction Criteria	Threshold Value
Battery voltage	≥ 10.9 V
Elapsed time after starting the engine	≥ 1 second
Terminal output voltage when ECM outputs OFF signal	Low

Time Needed for Diagnosis: 2500 ms
Malfunction Indicator Light Illumination: Illuminates when malfunction occurs in 2 continuous driving cycles.

• Normality Judgment

Judge as OK and clear the NG if the continuous time while the following conditions are established is more than the predetermined time.

Judgment Value

Malfunction Criteria	Threshold Value
Battery voltage	≥ 10.9 V
Elapsed time after starting the engine	≥ 1 second
Terminal output voltage when ECM outputs OFF signal	High

Time Needed for Diagnosis: Less than 1 second

CN:DTC P1420 FUEL TANK PRESSURE CONTROL SOL. VALVE CIRCUIT HIGH

1. OUTLINE OF DIAGNOSIS

Detect the open/short circuit of pressure control solenoid valve.
Judge as NG when ECM output level is different from actual terminal level.

2. COMPONENT DESCRIPTION

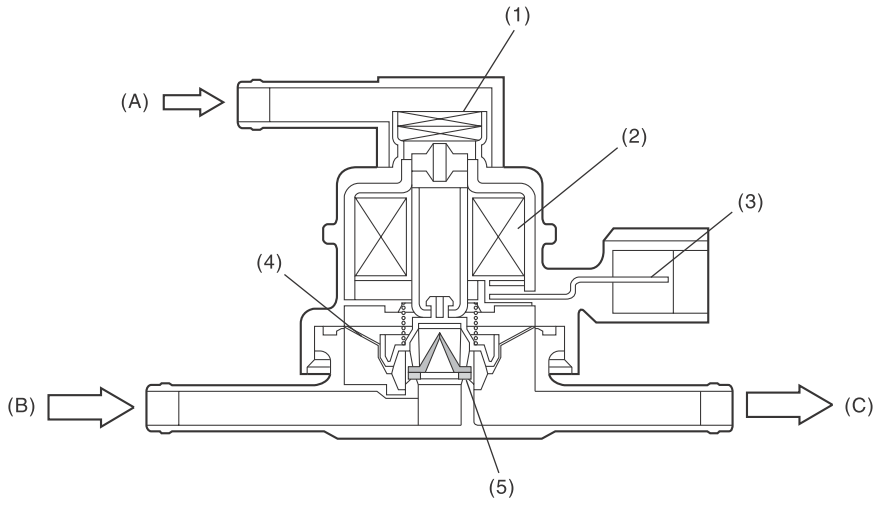

(A)	Atmospheric pressure	(B)	Shut-off valve	(C)	To fuel tank
(1)	Filter	(3)	Connector terminal	(5)	Valve
(2)	Coil	(4)	Diaphragm		

3. ENABLE CONDITION

Secondary Parameters	Enable Conditions
None	

4. GENERAL DRIVING CYCLE

Always perform the diagnosis after starting the engine.

5. DIAGNOSTIC METHOD

• Abnormality Judgment

If the duration of time while the following conditions are met is longer than the time indicated, judge as NG.

Judgment Value

Malfunction Criteria	Threshold Value
Battery voltage	≥ 10.9 V
Elapsed time after starting the engine	≥ 1 second
Terminal output voltage when ECM outputs ON signal	High

Time Needed for Diagnosis: 2500 ms
Malfunction Indicator Light Illumination: Illuminates when malfunction occurs in 2 continuous driving cycles.

• Normality Judgment

Judge as OK and clear the NG if the continuous time while the following conditions are established is more than the predetermined time.

Judgment Value

Malfunction Criteria	Threshold Value
Battery voltage	≥ 10.9 V
Elapsed time after starting the engine	≥ 1 second
Terminal output voltage when ECM outputs ON signal	Low

Time Needed for Diagnosis: Less than 1 second

CO:DTC P1443 VENT CONTROL SOLENOID VALVE FUNCTION PROBLEM

1. OUTLINE OF DIAGNOSIS

Detect the abnormal function (stuck closed) of the drain valve.
Judge as NG when fuel tank pressure is low.

2. COMPONENT DESCRIPTION

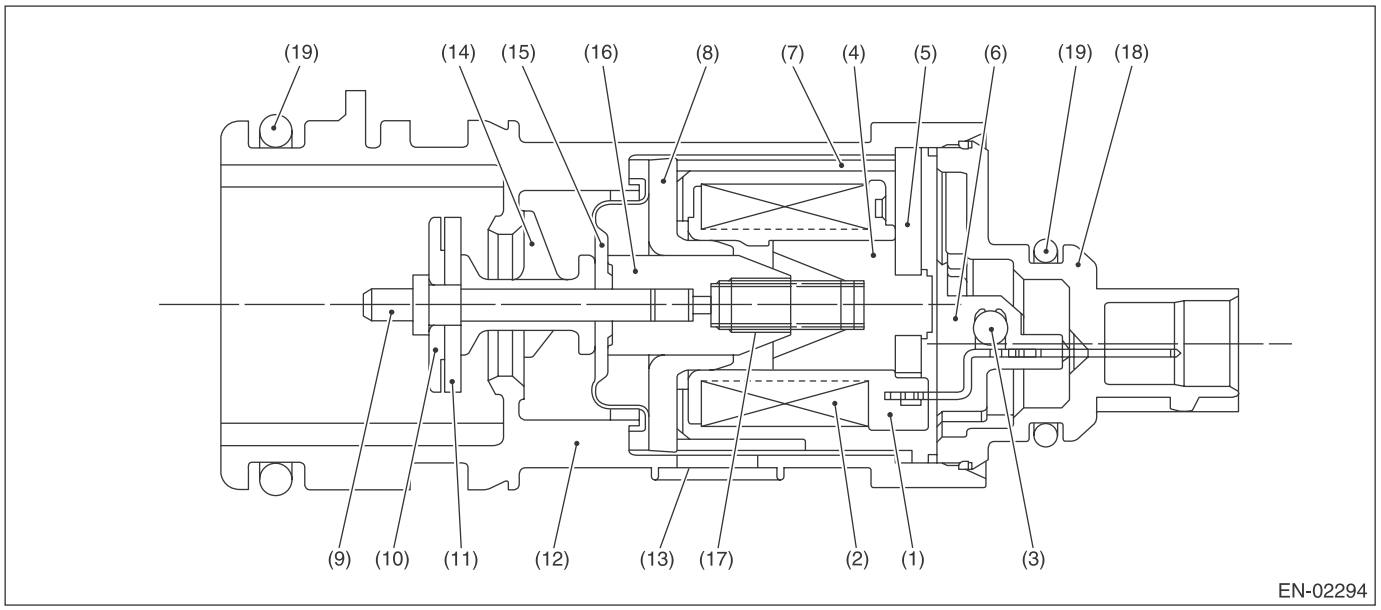

(1) Bobbin
(2) Coil
(3) Diode
(4) Stator core
(5) End plate
(6) Body
(7) Yoke
(8) Magnetic plate
(9) Shaft
(10) Plate
(11) Valve
(12) Housing
(13) Filter
(14) Retainer
(15) Diaphragm
(16) Movable core
(17) Spring
(18) Cover
(19) O-ring

3. ENABLE CONDITION

Secondary Parameters	Enable Conditions
Drain valve	Open
Battery voltage	≥ 10.9 V
Atmospheric pressure	≥ 75 kPa (563 mmHg, 22.2 inHg)
Tank pressure when starter is OFF → ON	–0.7 kPa (–5 mmHg, –0.2 inHg) and 1.4 kPa (10.7 mmHg, 0.4 inHg)

4. GENERAL DRIVING CYCLE

Always perform the diagnosis continuously.

5. DIAGNOSTIC METHOD

• Abnormality Judgment

If the duration of time while the following conditions are met is longer than the time indicated, judge as NG.

Judgment Value

Malfunction Criteria	Threshold Value
Fuel tank pressure	≤ –4 kPa (–30 mmHg, –1.2 inHg)

Time Needed for Diagnosis: 3000 ms
Malfunction Indicator Light Illumination: Illuminates as soon as a malfunction occurs.

• Normality Judgment

Judge as OK and clear the NG if the continuous time while the following conditions are established is more than the predetermined time.

Judgment Value

Malfunction Criteria	Threshold Value
Fuel tank pressure	> –4 kPa (–30 mmHg, –1.2 inHg)
Cumulative time when all the malfunction criteria below are met.	≥ 30000 ms
Purge control solenoid valve duty	Not = 0
Fuel temperature	–10 °C (14 °F) — 55 °C (131 °F)
Intake manifold relative pressure	≥ –26.7 kPa (–200 mmHg, –7.9 inHg)

Time Needed for Diagnosis: Less than 1 second

CP:DTC P1518 STARTER SWITCH CIRCUIT LOW INPUT

1. OUTLINE OF DIAGNOSIS

Detect the open or short circuit of starter SW.
Judge as OFF NG when it becomes after engine start despite no starter ON experience.

2. ENABLE CONDITIONS

Secondary Parameters	Enable Conditions
None	

3. GENERAL DRIVING CYCLE

Always perform the diagnosis continuously.

4. DIAGNOSTIC METHOD

- **Abnormality Judgment**

Judge as OFF NG when the following conditions are established.

Judgment Value

Malfunction Criteria	Threshold Value
Vehicle speed	< 1 km/h (0.6 MPH)
Starter ON signal	Not detected
Engine condition	Changed from before start to after start
Battery voltage	≥ 8 V

Time Needed for Diagnosis: Less than 1 second
Malfunction Indicator Light Illumination: Illuminates when malfunction occurs in 2 continuous driving cycles.

- **Normality Judgment**

Judge as OFF OK and clear the NG if the following conditions are established.

Judgment Value

Malfunction Criteria	Threshold Value
Starter ON	Experienced
Starter ON diagnosis	No diagnosis experience
Battery voltage	≥ 8 V

Time Needed for Diagnosis: Less than 1 second

CQ:DTC P1560 BACK-UP VOLTAGE CIRCUIT MALFUNCTION

1. OUTLINE OF DIAGNOSIS

Detect the open/short circuit of back-up power supply circuit.
Judge as NG when the backup power voltage is low.

2. ENABLE CONDITION

Secondary Parameters	Enable Conditions
None	

3. GENERAL DRIVING CYCLE

Always perform the diagnosis continuously.

4. DIAGNOSTIC METHOD

- **Abnormality Judgment**

If the duration of time while the following conditions are met is longer than the time indicated, judge as NG.

Judgment Value

Malfunction Criteria	Threshold Value
Voltage of back-up power supply	Low
Battery voltage	≥ 10.9 V
Engine condition	After engine starting

Time Needed for Diagnosis: 2500 ms
Malfunction Indicator Light Illumination: Illuminates as soon as a malfunction occurs.

- **Normality Judgment**

Judge as OK and clear the NG if the continuous time while the following conditions are established is more than the predetermined time.

Judgment Value

Malfunction Criteria	Threshold Value
Voltage of back-up power supply	High
Battery voltage	≥ 10.9 V
Engine condition	After engine starting

Time Needed for Diagnosis: Less than 1 second

CR:DTC P1570 ANTENNA

1. OUTLINE OF DIAGNOSIS

NOTE:
For the detection standard, refer to DTC P0513. <Ref. to GD(H4DOTC)-155, DTC P0513 INCORRECT IMMOBILIZER KEY, Diagnostic Trouble Code (DTC) Detecting Criteria.>

CS:DTC P1571 REFERENCE CODE INCOMPATIBILITY

1. OUTLINE OF DIAGNOSIS

NOTE:
For the detection standard, refer to DTC P0513. <Ref. to GD(H4DOTC)-155, DTC P0513 INCORRECT IMMOBILIZER KEY, Diagnostic Trouble Code (DTC) Detecting Criteria.>

CT:DTC P1572 IMM CIRCUIT FAILURE (EXCEPT ANTENNA CIRCUIT)

1. OUTLINE OF DIAGNOSIS

NOTE:
For the detection standard, refer to DTC P0513. <Ref. to GD(H4DOTC)-155, DTC P0513 INCORRECT IMMOBILIZER KEY, Diagnostic Trouble Code (DTC) Detecting Criteria.>

CU:DTC P1574 KEY COMMUNICATION FAILURE

1. OUTLINE OF DIAGNOSIS

NOTE:
For the detection standard, refer to DTC P0513. <Ref. to GD(H4DOTC)-155, DTC P0513 INCORRECT IMMOBILIZER KEY, Diagnostic Trouble Code (DTC) Detecting Criteria.>

CV:DTC P1576 EGI CONTROL MODULE EEPROM

1. OUTLINE OF DIAGNOSIS

NOTE:
For the detection standard, refer to DTC P0513. <Ref. to GD(H4DOTC)-155, DTC P0513 INCORRECT IMMOBILIZER KEY, Diagnostic Trouble Code (DTC) Detecting Criteria.>

CW:DTC P1577 IMM CONTROL MODULE EEPROM

1. OUTLINE OF DIAGNOSIS

NOTE:
For the detection standard, refer to DTC P0513. <Ref. to GD(H4DOTC)-155, DTC P0513 INCORRECT IMMOBILIZER KEY, Diagnostic Trouble Code (DTC) Detecting Criteria.>

CX:DTC P1578 METER FAILURE

1. OUTLINE OF DIAGNOSIS

NOTE:
For the detection standard, refer to DTC P0513. <Ref. to GD(H4DOTC)-155, DTC P0513 INCORRECT IMMOBILIZER KEY, Diagnostic Trouble Code (DTC) Detecting Criteria.>

CY:DTC P1602 CONTROL MODULE PROGRAMMING ERROR

1. OUTLINE OF DIAGNOSIS

Detect malfunctions of the catalyst advanced idling retard angle control.
Judge as NG when ECM is not controlling the angle properly during catalyst advanced idling retard angle control.
Judge as NG if there is exhaust gas temperature diagnosis, idle speed diagnosis and final ignition timing diagnosis, and if any one of them is NG.

- Exhaust temperature diagnosis

Judge as NG when the estimated exhausted gas temperature in 14 seconds after the cold start is below the specified value.

- Idle speed diagnosis

Judge as NG when actual engine speed is not close to target engine speed after terminating the retard angle control.

- Final ignition timing diagnosis

Judge as NG when actual retard amount is under the specified value at cold start.

2. ENABLE CONDITION

Secondary Parameters	Enable Conditions
Atmospheric pressure	≥ 75 kPa (563 mmHg, 22.2 inHg)
Battery voltage	≥ 10.9 V
Cold start diagnosis	Incomplete
Vehicle speed	< 3 km/h (1.9 MPH)
Misfire in 200 engine revs.	< 5
Elapsed time after starting the engine	= 14 s

3. GENERAL DRIVING CYCLE

Perform the diagnosis at cold start.

4. DIAGNOSTIC METHOD

- **Exhaust temperature diagnosis**

Abnormality Judgment

When the diagnostic execution conditions are established, calculate the estimated exhaust temperature. Judge as NG when the following conditions are established after engine starting within the predetermined time.

Judgment Value

Malfunction Criteria	Threshold Value
Estimated exhaust gas temperature	< Value from Map

Map

Coolant temperature after starting the engine	–40 °C (–40 °F)	–30 °C (–22 °F)	–20 °C (–4 °F)	–10 °C (14 °F)	0 °C (32 °F)	10 °C (50 °F)	20 °C (68 °F)	30 °C (86 °F)	40 °C (104 °F)	45 °C (113 °F)
Threshold Value	0 °C (32 °F)	0 °C (32 °F)	0 °C (32 °F)	79 °C (174.2 °F)	78 °C (172.4 °F)	76 °C (168.8 °F)	74 °C (165.2 °F)	72 °C (161.6 °F)	69 °C (156.2 °F)	65 °C (149 °F)

Time Needed for Diagnosis: 14 seconds
Malfunction Indicator Light Illumination: Illuminates when malfunction occurs in 2 continuous driving cycles.

Normality Judgment
Judge as OK and clear the NG if the following conditions are established.
Judgment Value

Malfunction Criteria	Threshold Value
Estimated exhaust gas temperature	≥ Value from Map

Time Needed for Diagnosis: Less than 1 second

- **Idle speed diagnosis**

Abnormality Judgment
Judge as NG when the following conditions are established after the predetermined time.
Judgment Value

Malfunction Criteria	Threshold Value
Continuous time of (Target engine speed – Actual engine speed > –200 rpm)	≥ 6000 ms
Continuous time of (actual retard amount > 30 °CA)	≥ 0 ms

Time Needed for Diagnosis: 14 seconds
Malfunction Indicator Light Illumination: Illuminates when malfunction occurs in 2 continuous driving cycles.
Normality Judgment
Judge as OK and clear the NG if the following conditions are established.
Judgment Value

Malfunction Criteria	Threshold Value
Continuous time of (Target engine speed – Actual engine speed > –200 rpm)	< 6000 ms
Continuous time of (actual retard amount > 30 °CA)	< 0 ms

Time Needed for Diagnosis: Less than 1 second

- **Final ignition timing diagnosis**

Abnormality Judgment
Judge as NG when the following conditions are established with diagnosis enable conditions successful.
Judgment Value

Malfunction Criteria	Threshold Value
Duration time of (Standard ignition timing – Actual ignition timing ≤ 0 °CA)	> 5000 ms

Time Needed for Diagnosis: 5000 ms
Malfunction Indicator Light Illumination: Illuminates when malfunction occurs in 2 continuous driving cycles.
Normality Judgment
Judge as OK and clear the NG if the following conditions are established.
Judgment Value

Malfunction Criteria	Threshold Value
Continuous time of (Standard ignition timing – Actual ignition timing > 0 °CA)	> 5000 ms

Time Needed for Diagnosis: 5000 ms

CZ:DTC P2004 INTAKE MANIFOLD RUNNER CONTROL STUCK OPEN (BANK 1)

1. OUTLINE OF DIAGNOSIS

Detect the malfunction of tumble generator valve motor function.
Judge open fixing malfunction when the opening degree is large even after finishing the tumble generator valve closing driving.

2. ENABLE CONDITION

Secondary Parameters	Enable Conditions
Battery voltage	≥ 10.9 V
Engine coolant temperature	≥ –30 °C (–22 °F)
Ambient air temperature	≥ –30 °C (–22 °F)

3. GENERAL DRIVING CYCLE

Always perform the diagnosis continuously.

4. DIAGNOSTIC METHOD

- **Abnormality Judgment**

If the duration of time while the following conditions are met is longer than the time indicated, judge as NG.

Judgment Value

Malfunction Criteria	Threshold Value
Tumble generator valve opening	≥ 64.3 °
Tumble generator valve “close” signal output	≥ 3200 ms

Time Needed for Diagnosis: 3000 ms
Malfunction Indicator Light Illumination: Illuminates as soon as a malfunction occurs.

- **Normality Judgment**

Judge as OK and clear the NG if the continuous time while the following conditions are established is more than the predetermined time.

Judgment Value

Malfunction Criteria	Threshold Value
Tumble generator valve opening	< 64.3 °
Tumble generator valve “close” signal output	≥ 3200 ms

Time Needed for Diagnosis: Less than 1 second

DA:DTC P2005 INTAKE MANIFOLD RUNNER CONTROL STUCK OPEN (BANK 2)

1. OUTLINE OF DIAGNOSIS

Detect the malfunction of tumble generator valve motor function.
Judge open fixing malfunction when the opening degree is large even after finishing the tumble generator valve closing driving.

2. ENABLE CONDITION

Secondary Parameters	Enable Conditions
Battery voltage	≥ 10.9 V
Engine coolant temperature	≥ –30 °C (–22 °F)
Ambient air temperature	≥ –30 °C (–22 °F)

3. GENERAL DRIVING CYCLE

Always perform the diagnosis continuously.

4. DIAGNOSTIC METHOD

- **Abnormality Judgment**

If the duration of time while the following conditions are met is longer than the time indicated, judge as NG.

Judgment Value

Malfunction Criteria	Threshold Value
Tumble generator valve opening	≥ 64.3 °
Tumble generator valve “close” signal output	≥ 3200 ms

Time Needed for Diagnosis: 3000 ms
Malfunction Indicator Light Illumination: Illuminates as soon as a malfunction occurs.

- **Normality Judgment**

Judge as OK and clear the NG if the continuous time while the following conditions are established is more than the predetermined time.

Judgment Value

Malfunction Criteria	Threshold Value
Tumble generator valve opening	< 64.3 °
Tumble generator valve “close” signal output	≥ 3200 ms

Time Needed for Diagnosis: Less than 1 second

DB:DTC P2006 INTAKE MANIFOLD RUNNER CONTROL STUCK CLOSED (BANK 1)

1. OUTLINE OF DIAGNOSIS

Detect the malfunction of tumble generator valve motor function.
Judge close fixing malfunction when the opening degree is small even after finishing the tumble generator valve open driving.

2. ENABLE CONDITION

Secondary Parameters	Enable Conditions
Battery voltage	≥ 10.9 V
Engine coolant temperature	≥ –30 °C (–22 °F)
Ambient air temperature	≥ –30 °C (–22 °F)

3. GENERAL DRIVING CYCLE

Always perform the diagnosis continuously.

4. DIAGNOSTIC METHOD

- **Abnormality Judgment**

If the duration of time while the following conditions are met is longer than the time indicated, judge as NG.

Judgment Value

Malfunction Criteria	Threshold Value
Tumble generator valve opening	< 64.3 °
Tumble generator valve “open” signal output	≥ 4600 ms

Time Needed for Diagnosis: 3000 ms
Malfunction Indicator Light Illumination: Illuminates as soon as a malfunction occurs.

- **Normality Judgment**

Judge as OK and clear the NG if the continuous time while the following conditions are established is more than the predetermined time.

Judgment Value

Malfunction Criteria	Threshold Value
Tumble generator valve opening	≥ 64.3 °
Tumble generator valve “open” signal output	≥ 4600 ms

Time Needed for Diagnosis: Less than 1 second

DC:DTC P2007 INTAKE MANIFOLD RUNNER CONTROL STUCK CLOSED (BANK 2)

1. OUTLINE OF DIAGNOSIS

Detect the malfunction of tumble generator valve motor function.
Judge close fixing malfunction when the opening degree is small even after finishing the tumble generator valve open driving.

2. ENABLE CONDITION

Secondary Parameters	Enable Conditions
Battery voltage	≥ 10.9 V
Engine coolant temperature	≥ –30 °C (–22 °F)
Ambient air temperature	≥ –30 °C (–22 °F)

3. GENERAL DRIVING CYCLE

Always perform the diagnosis continuously.

4. DIAGNOSTIC METHOD

- **Abnormality Judgment**

If the duration of time while the following conditions are met is longer than the time indicated, judge as NG.

Judgment Value

Malfunction Criteria	Threshold Value
Tumble generator valve opening	< 64.3 °
Tumble generator valve “open” signal output	≥ 4600 ms

Time Needed for Diagnosis: 3000 ms
Malfunction Indicator Light Illumination: Illuminates as soon as a malfunction occurs.

- **Normality Judgment**

Judge as OK and clear the NG if the continuous time while the following conditions are established is more than the predetermined time.

Judgment Value

Malfunction Criteria	Threshold Value
Tumble generator valve opening	≥ 64.3 °
Tumble generator valve “open” signal output	≥ 4600 ms

Time Needed for Diagnosis: Less than 1 second

DD:DTC P2008 INTAKE MANIFOLD RUNNER CONTROL CIRCUIT / OPEN (BANK 1)

1. OUTLINE OF DIAGNOSIS

Detect the open or short circuit of tumble generator valve motor.
Judge as NG when the open signal is sent from IC after tumble generator valve driving IC diagnosis.

2. COMPONENT DESCRIPTION

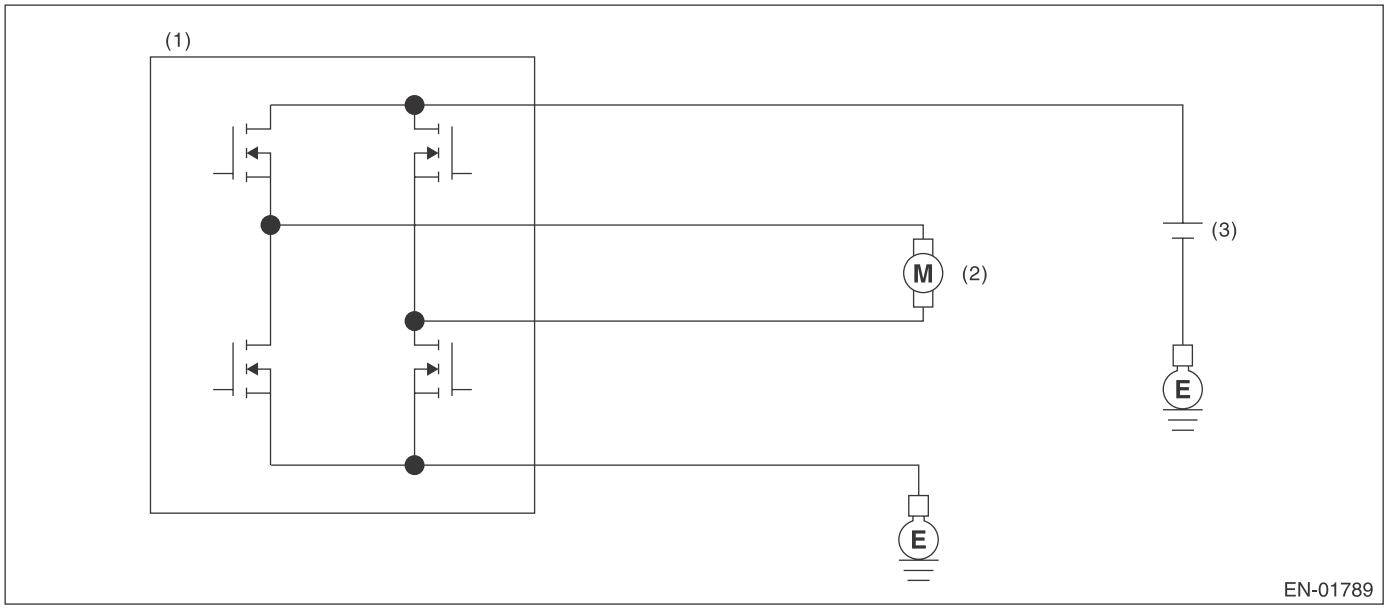

(1) Engine control module (ECM) (2) Tumble generator valve (3) Battery

3. ENABLE CONDITION

Secondary Parameters	Enable Conditions
Battery voltage	≥ 10.9 V

4. GENERAL DRIVING CYCLE

Always perform the diagnosis continuously.

5. DIAGNOSTIC METHOD

• Abnormality Judgment

At the main IC, check the sent signal at each timing which occurs immediately after the tumble generator valve output is set to ON → OFF, and judge open NG when the open NG signal is sent 96 ms × 20 time(s) in a row.

Judgment Value

Malfunction Criteria	Threshold Value
Open NG signal input	Low

Time Needed for Diagnosis: 96 ms × 20 time(s)
Malfunction Indicator Light Illumination: Illuminates as soon as a malfunction occurs.

• Normality Judgment

Judge as OK and clear the NG when the OK signal is sent.

Judgment Value

Malfunction Criteria	Threshold Value
Open NG signal input	High

Time Needed for Diagnosis: Less than 1 second

DE:DTC P2009 INTAKE MANIFOLD RUNNER CONTROL CIRCUIT LOW (BANK 1)

1. OUTLINE OF DIAGNOSIS

Detect the open or short circuit of tumble generator valve motor.
Judge as NG when the overcurrent signal is sent from IC after tumble generator valve driving IC diagnosis.

2. COMPONENT DESCRIPTION

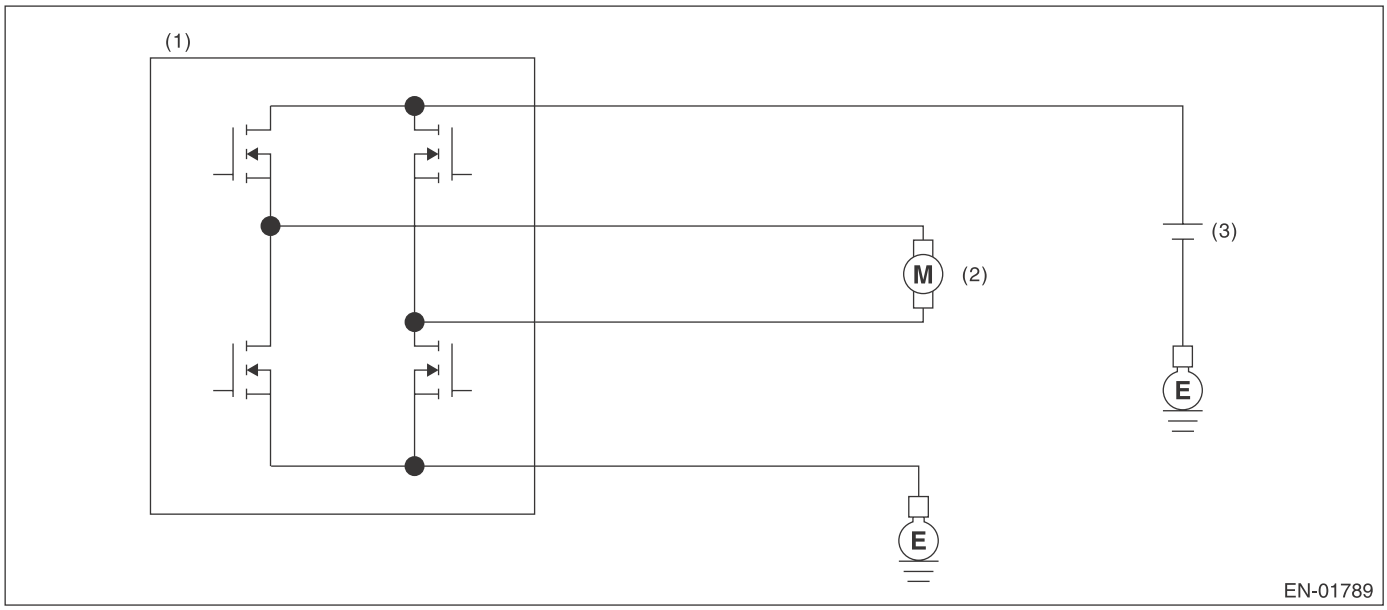

(1) Engine control module (ECM) (2) Tumble generator valve (3) Battery

3. ENABLE CONDITION

Secondary Parameters	Enable Conditions
Battery voltage	≥ 10.9 V

4. GENERAL DRIVING CYCLE

Always perform the diagnosis continuously.

5. DIAGNOSTIC METHOD

• Abnormality Judgment

At the main IC, check the sent signal at each timing which occurs just before the tumble generator valve output is set to ON → OFF, and judge open NG when the open NG signal is sent 96 ms × 10 time(s) in a row.

Judgment Value

Malfunction Criteria	Threshold Value
Overcurrent NG signal input	Low

Time Needed for Diagnosis: 96 ms × 10 time(s)
Malfunction Indicator Light Illumination: Illuminates as soon as a malfunction occurs.

• Normality Judgment

Judge as OK and clear the NG when the OK signal is sent.

Judgment Value

Malfunction Criteria	Threshold Value
Overcurrent NG signal input	High

Time Needed for Diagnosis: Less than 1 second

DF:DTC P2011 INTAKE MANIFOLD RUNNER CONTROL CIRCUIT / OPEN (BANK 2)

1. OUTLINE OF DIAGNOSIS

Detect the open or short circuit of tumble generator valve motor.
Judge as NG when the open signal is sent from IC after tumble generator valve driving IC diagnosis.

2. COMPONENT DESCRIPTION

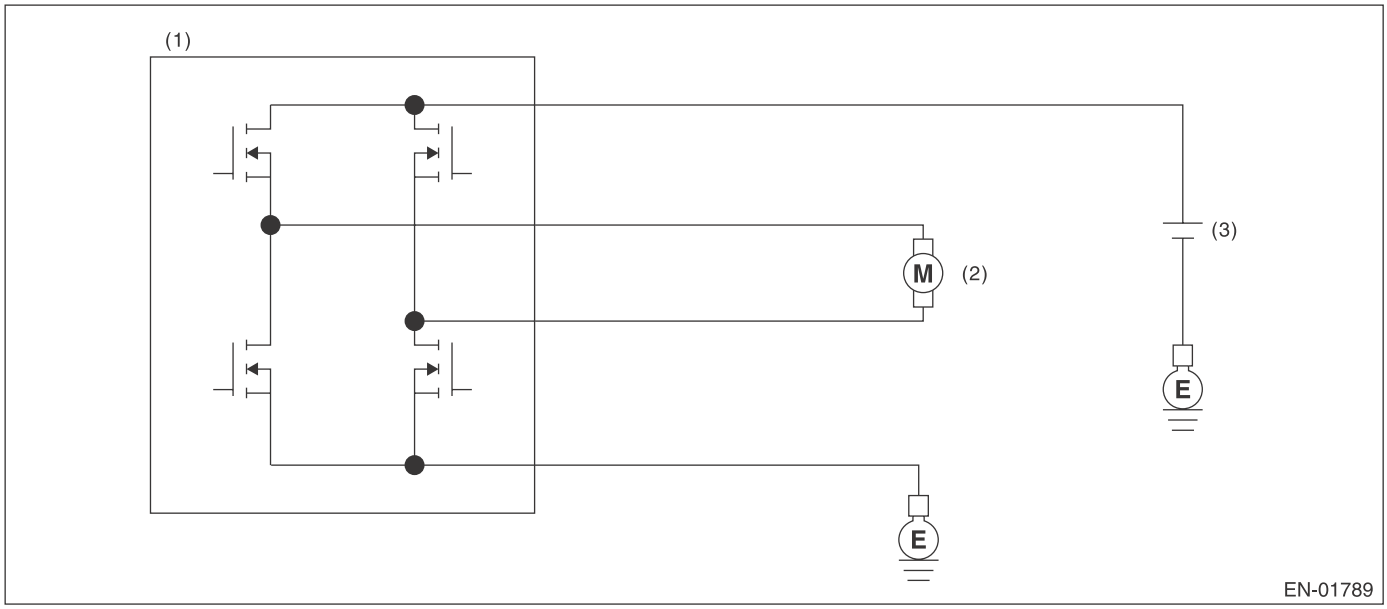

(1) Engine control module (ECM) (2) Tumble generator valve (3) Battery

3. ENABLE CONDITION

Secondary Parameters	Enable Conditions
Battery voltage	≥ 10.9 V

4. GENERAL DRIVING CYCLE

Always perform the diagnosis continuously.

5. DIAGNOSTIC METHOD

• Abnormality Judgment

At the main IC, check the sent signal at each timing which occurs just before the tumble generator valve output is set to ON → OFF, and judge open NG when the open NG signal is sent 96 ms × 20 time(s) in a row.

Judgment Value

Malfunction Criteria	Threshold Value
Open NG signal input	Low

Time Needed for Diagnosis: 96 ms × 20 time(s)
Malfunction Indicator Light Illumination: Illuminates as soon as a malfunction occurs.

• Normality Judgment

Judge as OK and clear the NG when the OK signal is sent.

Judgment Value

Malfunction Criteria	Threshold Value
Open NG signal input	High

Time Needed for Diagnosis: Less than 1 second

DG:DTC P2012 INTAKE MANIFOLD RUNNER CONTROL CIRCUIT LOW (BANK 2)

1. OUTLINE OF DIAGNOSIS

Detect the open or short circuit of tumble generator valve motor.
Judge as NG when the overcurrent signal is sent from IC after tumble generator valve driving IC diagnosis.

2. COMPONENT DESCRIPTION

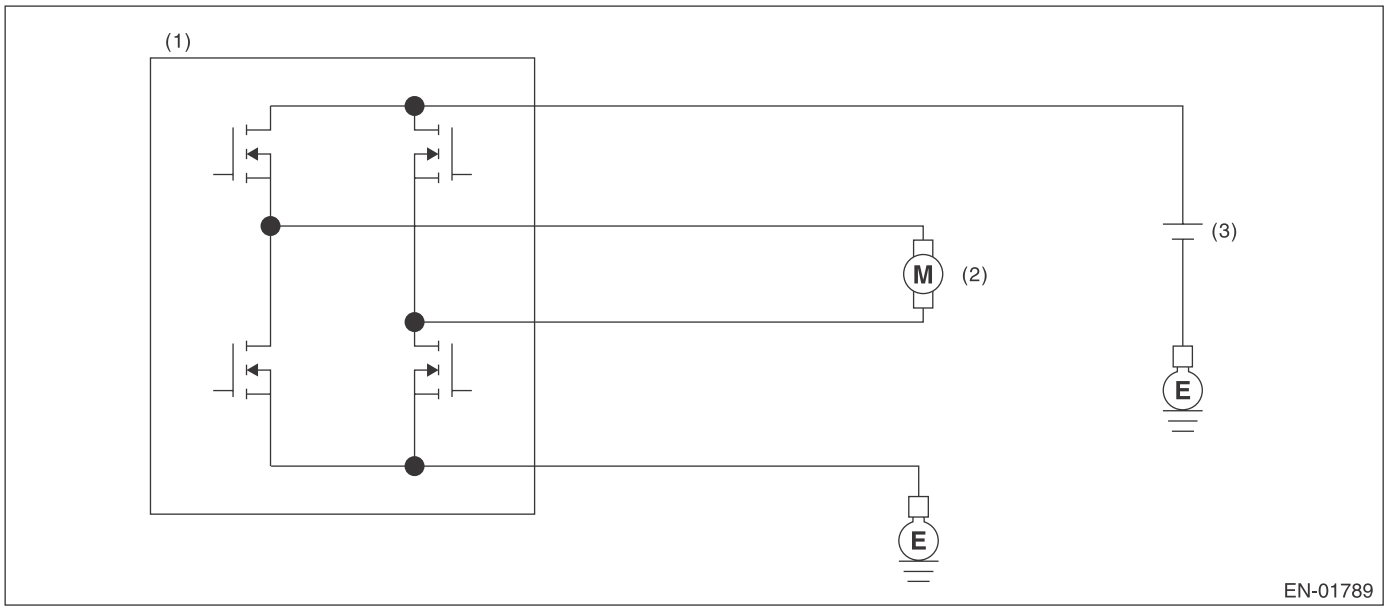

(1) Engine control module (ECM) (2) Tumble generator valve (3) Battery

3. ENABLE CONDITION

Secondary Parameters	Enable Conditions
Battery voltage	≥ 10.9 V

4. GENERAL DRIVING CYCLE

Always perform the diagnosis continuously.

5. DIAGNOSTIC METHOD

• Abnormality Judgment

At the main IC, check the sent signal at each timing which occurs just before the tumble generator valve output is set to ON → OFF, and judge open NG when the open NG signal is sent 96 ms × 10 time(s) in a row.

Judgment Value

Malfunction Criteria	Threshold Value
Overcurrent NG signal input	Low

Time Needed for Diagnosis: 96 ms × 10 time(s)
Malfunction Indicator Light Illumination: Illuminates as soon as a malfunction occurs.

• Normality Judgment

Judge as OK and clear the NG when the OK signal is sent.

Judgment Value

Malfunction Criteria	Threshold Value
Overcurrent NG signal input	High

Time Needed for Diagnosis: Less than 1 second

DH:DTC P2016 INTAKE MANIFOLD RUNNER POSITION SENSOR / SWITCH CIRCUIT LOW (BANK 1)

1. OUTLINE OF DIAGNOSIS

Detect open or short circuit of tumble generator valve position sensor.
Judge as NG if out of specification.

2. COMPONENT DESCRIPTION

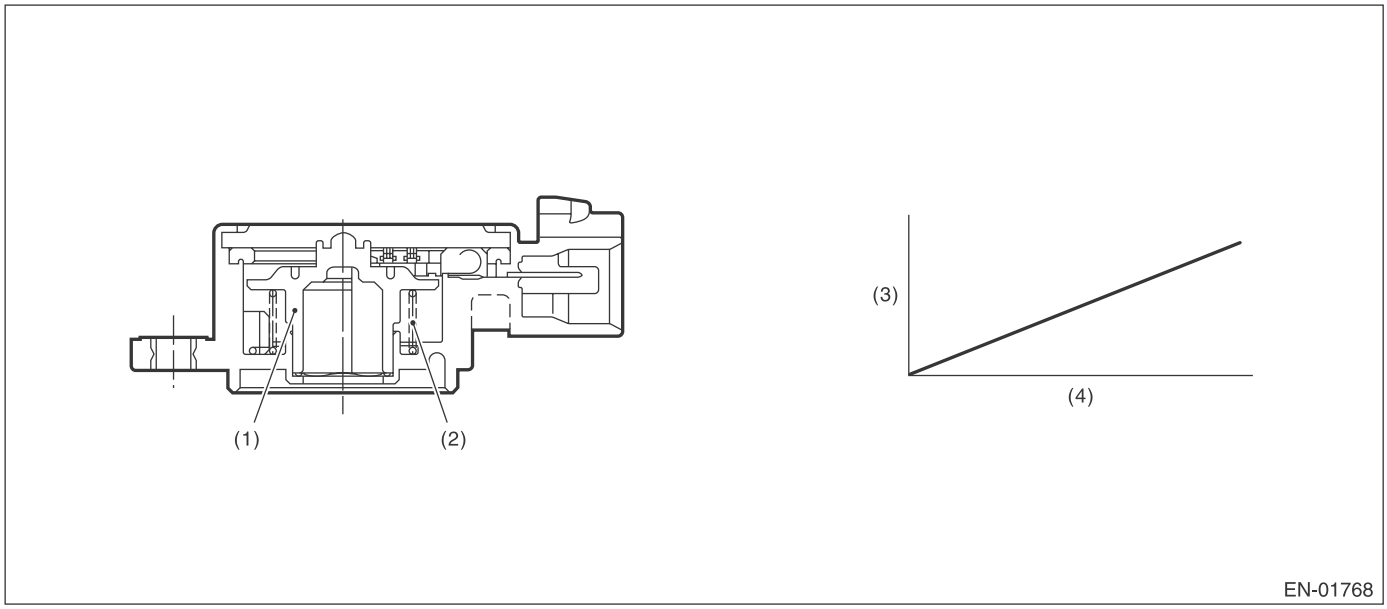

(1) Rotor
(2) Return spring
(3) Voltage (V)
(4) Tumble generator valve opening (°)

3. ENABLE CONDITION

Secondary Parameters	Enable Conditions
None	

4. GENERAL DRIVING CYCLE

Always perform the diagnosis continuously.

5. DIAGNOSTIC METHOD

- **Abnormality Judgment**

If the duration of time while the following conditions are met is longer than the time indicated, judge as NG.

Judgment Value

Malfunction Criteria	Threshold Value
Output voltage	< 0.217 V

Time Needed for Diagnosis: 500 ms
Malfunction Indicator Light Illumination: Illuminates as soon as a malfunction occurs.

- **Normality Judgment**

Judge as OK and clear the NG if the continuous time while the following conditions are established is more than the predetermined time.

Judgment Value

Malfunction Criteria	Threshold Value
Output voltage	≥ 0.217 V

Time Needed for Diagnosis: Less than 1 second

DI: DTC P2017 INTAKE MANIFOLD RUNNER POSITION SENSOR / SWITCH CIRCUIT HIGH (BANK 1)

1. OUTLINE OF DIAGNOSIS

Detect open or short circuit of tumble generator valve position sensor.
Judge as NG if out of specification.

2. COMPONENT DESCRIPTION

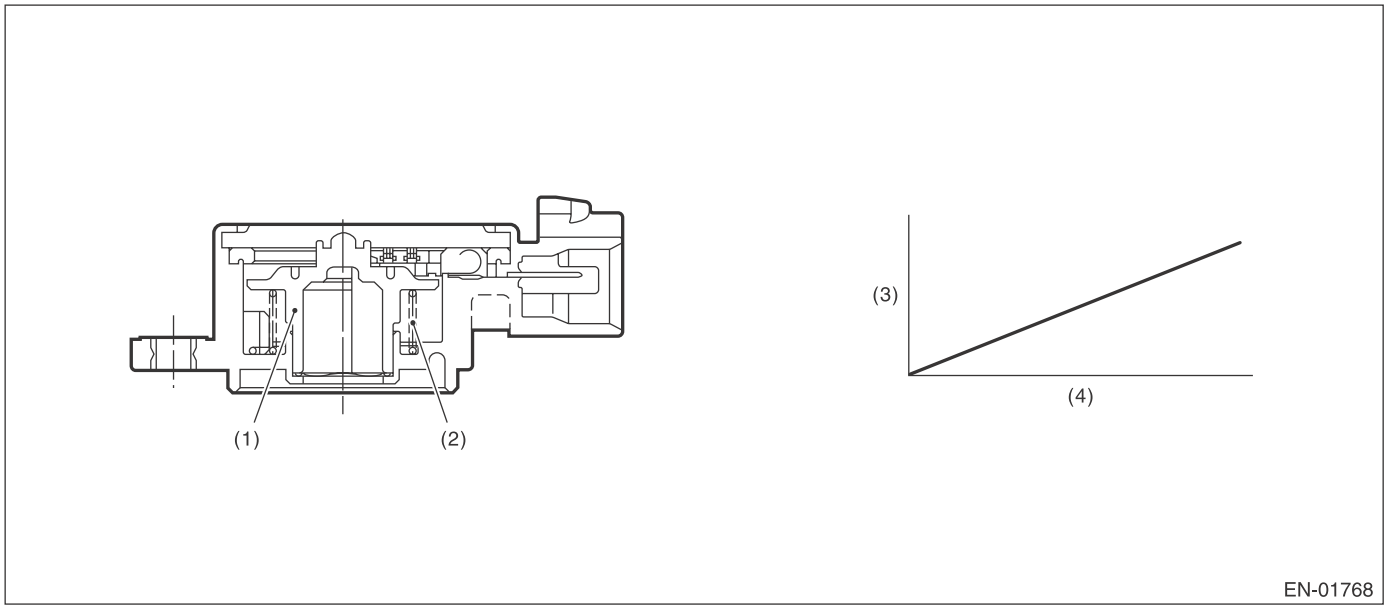

(1) Rotor
(2) Return spring
(3) Voltage (V)
(4) Throttle valve opening angle (°)

3. ENABLE CONDITION

Secondary Parameters	Enable Conditions
None	

4. GENERAL DRIVING CYCLE

Always perform the diagnosis continuously.

5. DIAGNOSTIC METHOD

• Abnormality Judgment

If the duration of time while the following conditions are met is longer than the time indicated, judge as NG.

Judgment Value

Malfunction Criteria	Threshold Value
Output voltage	≥ 4.783 V

Time Needed for Diagnosis: 500 ms
Malfunction Indicator Light Illumination: Illuminates as soon as a malfunction occurs.

• Normality Judgment

Judge as OK and clear the NG if the continuous time while the following conditions are established is more than the predetermined time.

Judgment Value

Malfunction Criteria	Threshold Value
Output voltage	< 4.783 V

Time Needed for Diagnosis: Less than 1 second

DJ:DTC P2021 INTAKE MANIFOLD RUNNER POSITION SENSOR / SWITCH CIRCUIT LOW (BANK 2)

1. OUTLINE OF DIAGNOSIS

Detect open or short circuit of tumble generator valve position sensor.
Judge as NG if out of specification.

2. COMPONENT DESCRIPTION

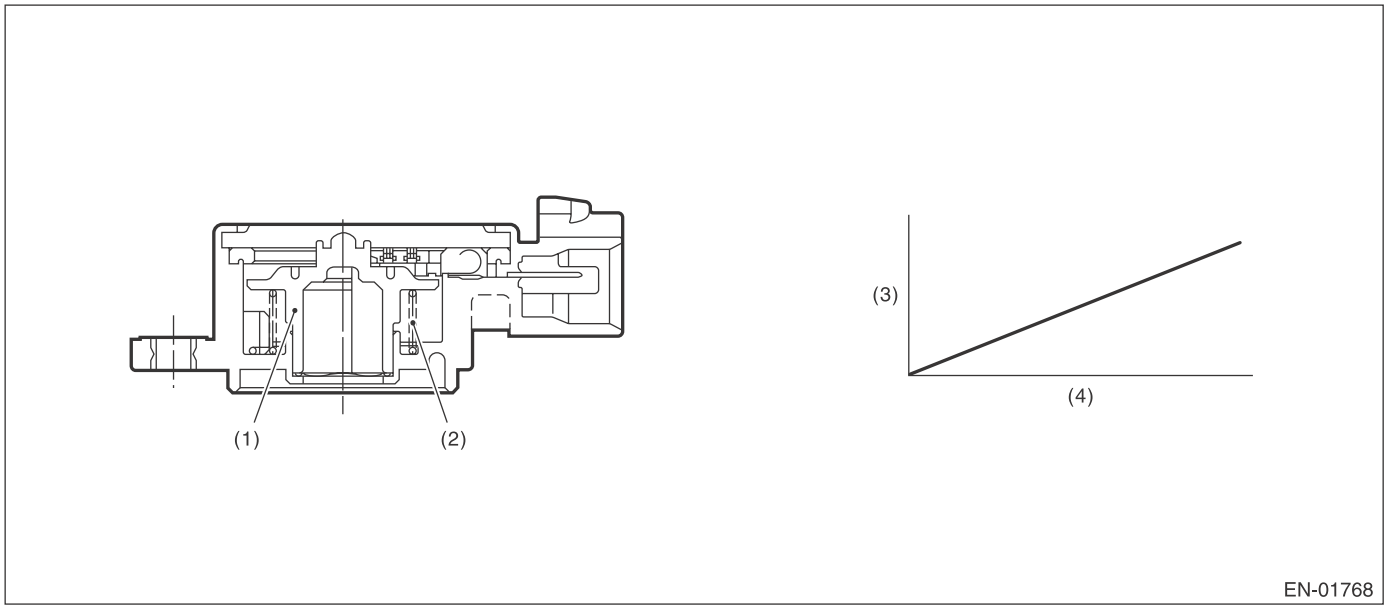

(1) Rotor
(2) Return spring
(3) Voltage (V)
(4) Tumble generator valve opening (°)

3. ENABLE CONDITION

Secondary Parameters	Enable Conditions
None	

4. GENERAL DRIVING CYCLE

Always perform the diagnosis continuously.

5. DIAGNOSTIC METHOD

• Abnormality Judgment

If the duration of time while the following conditions are met is longer than the time indicated, judge as NG.

Judgment Value

Malfunction Criteria	Threshold Value
Output voltage	< 0.217 V

Time Needed for Diagnosis: 500 ms
Malfunction Indicator Light Illumination: Illuminates as soon as a malfunction occurs.

• Normality Judgment

Judge as OK and clear the NG if the continuous time while the following conditions are established is more than the predetermined time.

Judgment Value

Malfunction Criteria	Threshold Value
Output voltage	≥ 0.217 V

Time Needed for Diagnosis: Less than 1 second

DK:DTC P2022 INTAKE MANIFOLD RUNNER POSITION SENSOR / SWITCH CIRCUIT HIGH (BANK 2)

1. OUTLINE OF DIAGNOSIS

Detect open or short circuit of tumble generator valve position sensor.
Judge as NG if out of specification.

2. COMPONENT DESCRIPTION

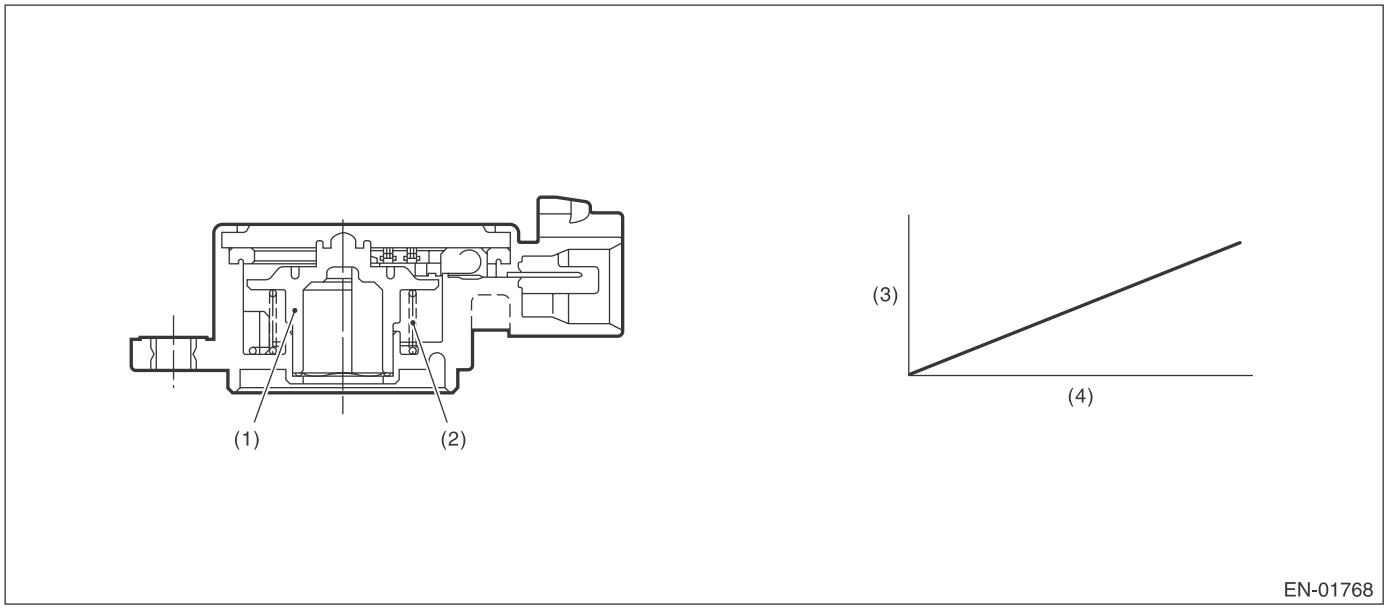

(1) Rotor
(2) Return spring
(3) Voltage (V)
(4) Tumble generator valve opening (°)

3. ENABLE CONDITION

Secondary Parameters	Enable Conditions
None	

4. GENERAL DRIVING CYCLE

Always perform the diagnosis continuously.

5. DIAGNOSTIC METHOD

• Abnormality Judgment

If the duration of time while the following conditions are met is longer than the time indicated, judge as NG.

Judgment Value

Malfunction Criteria	Threshold Value
Output voltage	≥ 4.783 V

Time Needed for Diagnosis: 500 ms
Malfunction Indicator Light Illumination: Illuminates as soon as a malfunction occurs.

• Normality Judgment

Judge as OK and clear the NG if the continuous time while the following conditions are established is more than the predetermined time.

Judgment Value

Malfunction Criteria	Threshold Value
Output voltage	< 4.783 V

Time Needed for Diagnosis: Less than 1 second

DL:DTC P2088 INTAKE CAMSHAFT POSITION ACTUATOR CONTROL CIRCUIT LOW (BANK 1)

1. OUTLINE OF DIAGNOSIS

Detect open or short circuit of the oil flow control solenoid valve.
Judge as NG when the current is small even though the duty signal is large.

2. ENABLE CONDITION

Secondary Parameters	Enable Conditions
None	

3. GENERAL DRIVING CYCLE

Always perform the diagnosis continuously.

4. DIAGNOSTIC METHOD

- **Abnormality Judgment**

If the duration of time while the following conditions are met is longer than the time indicated, judge as NG.

Judgment Value

Malfunction Criteria	Threshold Value
Battery voltage	≥ 10.9 V
Oil flow control solenoid valve control duty	≥ 99.61 %
Oil control solenoid valve control present current	< 0.306 A

Time Needed for Diagnosis: 2000 ms
Malfunction Indicator Light Illumination: Illuminates as soon as a malfunction occurs.

- **Normality Judgment**

Judge as OK and clear the NG if the continuous time while the following conditions are established is more than the predetermined time.

Judgment Value

Malfunction Criteria	Threshold Value
Battery voltage	≥ 10.9 V
Target current value of the oil flow control solenoid valve	≥ 0.14 A
|Target current value of the oil flow control solenoid valve – oil flow control solenoid valve control current value|	< 0.08 A

Time Needed for Diagnosis: 2000 ms

DM:DTC P2089 INTAKE CAMSHAFT POSITION ACTUATOR CONTROL CIRCUIT HIGH (BANK 1)

1. OUTLINE OF DIAGNOSIS

Detect open or short circuit of oil flow control solenoid valve.
Judge as NG when the current is large even though the duty signal is small.

2. ENABLE CONDITION

Secondary Parameters	Enable Conditions
None	

3. GENERAL DRIVING CYCLE

Always perform the diagnosis continuously.

4. DIAGNOSTIC METHOD

- **Abnormality Judgment**

If the duration of time while the following conditions are met is longer than the time indicated, judge as NG.

Judgment Value

Malfunction Criteria	Threshold Value
Battery voltage	≥ 10.9 V
Oil flow control solenoid valve control duty	< 0.39 %
Oil control solenoid valve control present current	≥ 0.306 A

Time Needed for Diagnosis: 2000 ms
Malfunction Indicator Light Illumination: Illuminates as soon as a malfunction occurs.

- **Normality Judgment**

Judge as OK and clear the NG if the continuous time while the following conditions are established is more than the predetermined time.

Judgment Value

Malfunction Criteria	Threshold Value
Battery voltage	≥ 10.9 V
|Target current value of the oil flow control solenoid valve – oil flow control solenoid valve control current value|	< 0.08 A

Time Needed for Diagnosis: 2000 ms

DN:DTC P2090 EXHAUST CAMSHAFT POSITION ACTUATOR CONTROL CIRCUIT LOW (BANK 1)

1. OUTLINE OF DIAGNOSIS

Detect open or short circuit of the oil flow control solenoid valve.
Judge as NG when the current is small even though the duty signal is large.

2. ENABLE CONDITIONS

Secondary Parameters	Enable Conditions
None	

3. GENERAL DRIVING CYCLE

Always perform the diagnosis continuously.

4. DIAGNOSTIC METHOD

- **Abnormality Judgment**

If the duration of time while the following conditions are met is longer than the time indicated, judge as NG.

Judgment Value

Malfunction Criteria	Threshold Value
Battery voltage	≥ 10.9 V
Oil flow control solenoid valve control duty	≥ 99.61 %
Oil control solenoid valve control present current	< 0.306 A

Time Needed for Diagnosis: 2000 ms
Malfunction Indicator Light Illumination: Illuminates as soon as a malfunction occurs.

- **Normality Judgment**

Judge as OK and clear the NG if the continuous time while the following conditions are established is more than the predetermined time.

Judgment Value

Malfunction Criteria	Threshold Value
Battery voltage	≥ 10.9 V
Target current value of the oil flow control solenoid valve	≥ 0.14 A
|Target current value of the oil flow control solenoid valve – oil flow control solenoid valve control current value|	< 0.08 A

Time Needed for Diagnosis: 2000 ms

DO:DTC P2091 EXHAUST CAMSHAFT POSITION ACTUATOR CONTROL CIRCUIT HIGH (BANK 1)

1. OUTLINE OF DIAGNOSIS

Detect open or short circuit of oil flow control solenoid valve.
Judge as NG when the current is large even though the duty signal is small.

2. ENABLE CONDITIONS

Secondary Parameters	Enable Conditions
None	

3. GENERAL DRIVING CYCLE

Always perform the diagnosis continuously.

4. DIAGNOSTIC METHOD

- **Abnormality Judgment**

If the duration of time while the following conditions are met is longer than the time indicated, judge as NG.

Judgment Value

Malfunction Criteria	Threshold Value
Battery voltage	≥ 10.9 V
Oil flow control solenoid valve control duty	< 0.39 %
Oil control solenoid valve control present current	≥ 0.306 A

Time Needed for Diagnosis: 2000 ms
Malfunction Indicator Light Illumination: Illuminates as soon as a malfunction occurs.

- **Normality Judgment**

Judge as OK and clear the NG if the continuous time while the following conditions are established is more than the predetermined time.

Judgment Value

Malfunction Criteria	Threshold Value
Battery voltage	≥ 10.9 V
|Target current value of the oil flow control solenoid valve – oil flow control solenoid valve control current value|	< 0.08 A

Time Needed for Diagnosis: 2000 ms

DP:DTC P2092 INTAKE CAMSHAFT POSITION ACTUATOR CONTROL CIRCUIT LOW (BANK 2)

1. OUTLINE OF DIAGNOSIS

NOTE:
For the detection standard, refer to DTC P2088. <Ref. to GD(H4DOTC)-194, DTC P2088 INTAKE CAMSHAFT POSITION ACTUATOR CONTROL CIRCUIT LOW (BANK 1), Diagnostic Trouble Code (DTC) Detecting Criteria.>

DQ:DTC P2093 INTAKE CAMSHAFT POSITION ACTUATOR CONTROL CIRCUIT HIGH (BANK 2)

1. OUTLINE OF DIAGNOSIS

NOTE:
For the detection standard, refer to DTC P2089. <Ref. to GD(H4DOTC)-195, DTC P2089 INTAKE CAMSHAFT POSITION ACTUATOR CONTROL CIRCUIT HIGH (BANK 1), Diagnostic Trouble Code (DTC) Detecting Criteria.>

DR:DTC P2094 EXHAUST CAMSHAFT POSITION ACTUATOR CONTROL CIRCUIT LOW (BANK 2)

1. OUTLINE OF DIAGNOSIS

NOTE:
For the detection standard, refer to DTC P2090. <Ref. to GD(H4DOTC)-196, DTC P2090 EXHAUST CAMSHAFT POSITION ACTUATOR CONTROL CIRCUIT LOW (BANK 1), Diagnostic Trouble Code (DTC) Detecting Criteria.>

DS:DTC P2095 EXHAUST CAMSHAFT POSITION ACTUATOR CONTROL CIRCUIT HIGH (BANK 2)

1. OUTLINE OF DIAGNOSIS

NOTE:
For the detection standard, refer to DTC P2091. <Ref. to GD(H4DOTC)-197, DTC P2091 EXHAUST CAMSHAFT POSITION ACTUATOR CONTROL CIRCUIT HIGH (BANK 1), Diagnostic Trouble Code (DTC) Detecting Criteria.>

DT:DTC P2096 POST CATALYST FUEL TRIM SYSTEM TOO LEAN (BANK 1)

1. OUTLINE OF DIAGNOSIS

Detect the malfunction of fuel system from the size of the sub feedback learning value.
Control the sub feedback learning and judge as NG when the learning value is in the lean zone.

2. COMPONENT DESCRIPTION

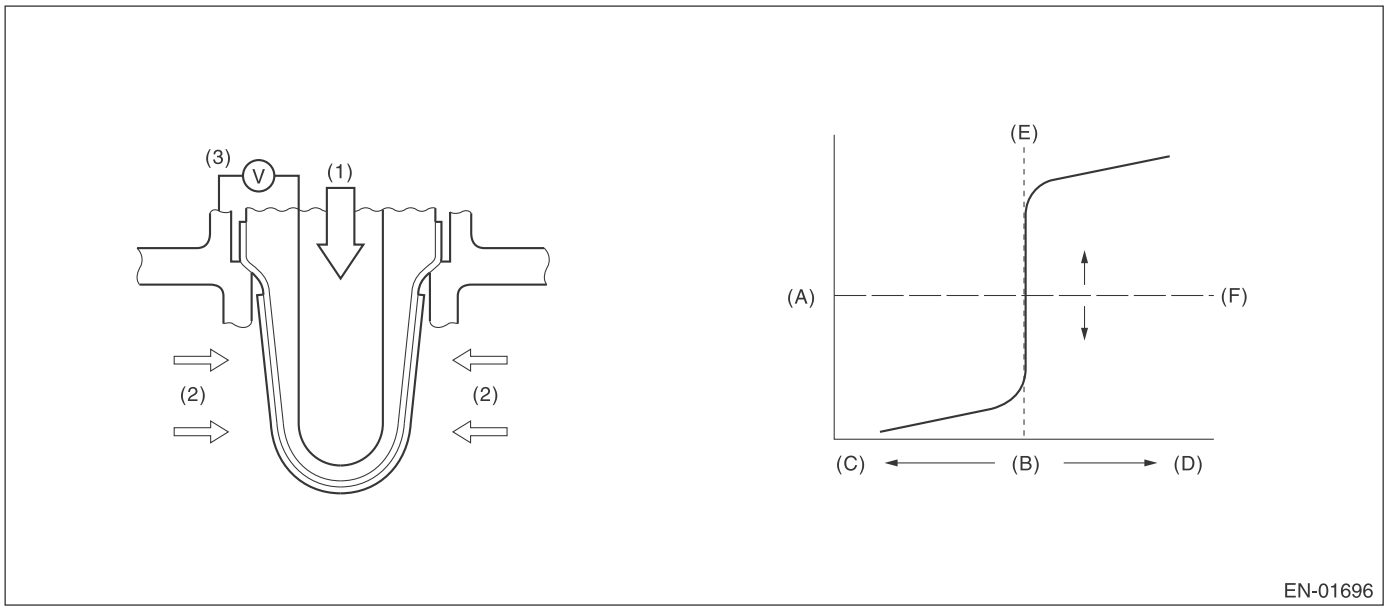

(A)	Electromotive force	(B)	Air fuel ratio	(C)	Rich
(D)	Lean	(E)	Theoretical air fuel ratio	(F)	Comparative voltage
(1)	Atmosphere	(2)	Exhaust gas	(3)	Electromotive force

3. ENABLE CONDITION

Secondary Parameters	Enable Conditions
Conditions for carrying out the sub feedback learning	Complete
Continuous time when all conditions are established.	≥ 1 s

4. GENERAL DRIVING CYCLE

Perform the diagnosis continuously when the vehicle is idling or running at a constant speed of 80 km/h (50 MPH) or more.

5. DIAGNOSTIC METHOD

• Abnormality Judgment

If the duration of time while the following conditions are met is longer than the time indicated, judge as NG.

Judgment Value

Malfunction Criteria	Threshold Value
Sub feedback learning value	< –0.05

Time Needed for Diagnosis: 5 s × 1 time(s)
Malfunction Indicator Light Illumination: Illuminates when malfunction occurs in 2 continuous driving cycles.

• Normality Judgment

Judge as OK and clear the NG if the continuous time while the following conditions are established is more than the predetermined time.

Judgment Value

Malfunction Criteria	Threshold Value
Sub feedback learning value	≥ –0.05 + 0

Time Needed for Diagnosis: 5 s

DU:DTC P2097 POST CATALYST FUEL TRIM SYSTEM TOO RICH (BANK 1)

1. OUTLINE OF DIAGNOSIS

Detect the malfunction of fuel system from the size of the sub feedback learning value.
Sub feedback learning is being performed. When the learning value goes to the rich side, judge as NG.

2. COMPONENT DESCRIPTION

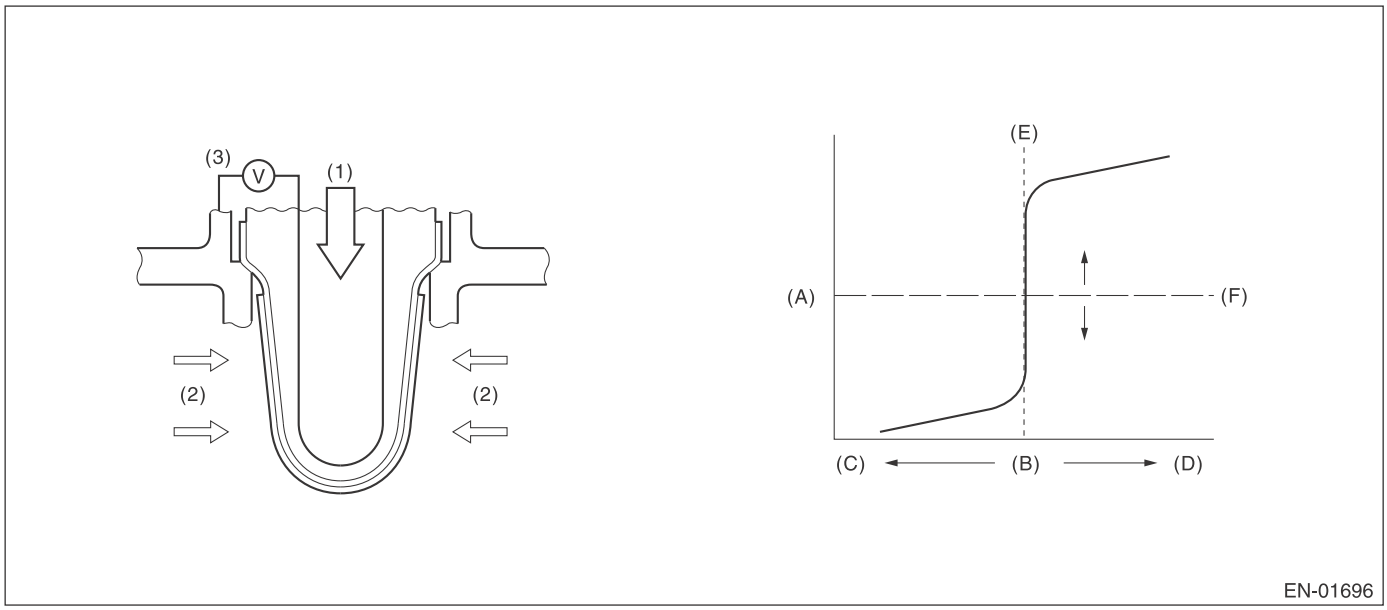

(A)	Electromotive force	(B)	Air fuel ratio	(C)	Rich
(D)	Lean	(E)	Theoretical air fuel ratio	(F)	Comparative voltage
(1)	Atmosphere	(2)	Exhaust gas	(3)	Electromotive force

3. ENABLE CONDITION

Secondary Parameters	Enable Conditions
Conditions for carrying out the sub feedback learning	Complete
Continuous time when all conditions are established.	≥ 1 s

4. GENERAL DRIVING CYCLE

Perform the diagnosis continuously when the vehicle is idling or running at a constant speed of 80 km/h (50 MPH) or more.

5. DIAGNOSTIC METHOD

• Abnormality Judgment

If the duration of time while the following conditions are met is longer than the time indicated, judge as NG.

Judgment Value

Malfunction Criteria	Threshold Value
Sub feedback learning value	≥ 0.03

Time Needed for Diagnosis: 5 s × 1 time(s)
Malfunction Indicator Light Illumination: Illuminates when malfunction occurs in 2 continuous driving cycles.

• Normality Judgment

Judge as OK and clear the NG if the continuous time while the following conditions are established is more than the predetermined time.

Judgment Value

Malfunction Criteria	Threshold Value
Sub feedback learning value	< 0.03 + 0

Time Needed for Diagnosis: 5 s

DV:DTC P2101 THROTTLE ACTUATOR CONTROL MOTOR CIRCUIT RANGE/ PERFORMANCE

1. OUTLINE OF DIAGNOSIS

Judge as NG when the motor current becomes large or drive circuit is heated.

2. COMPONENT DESCRIPTION

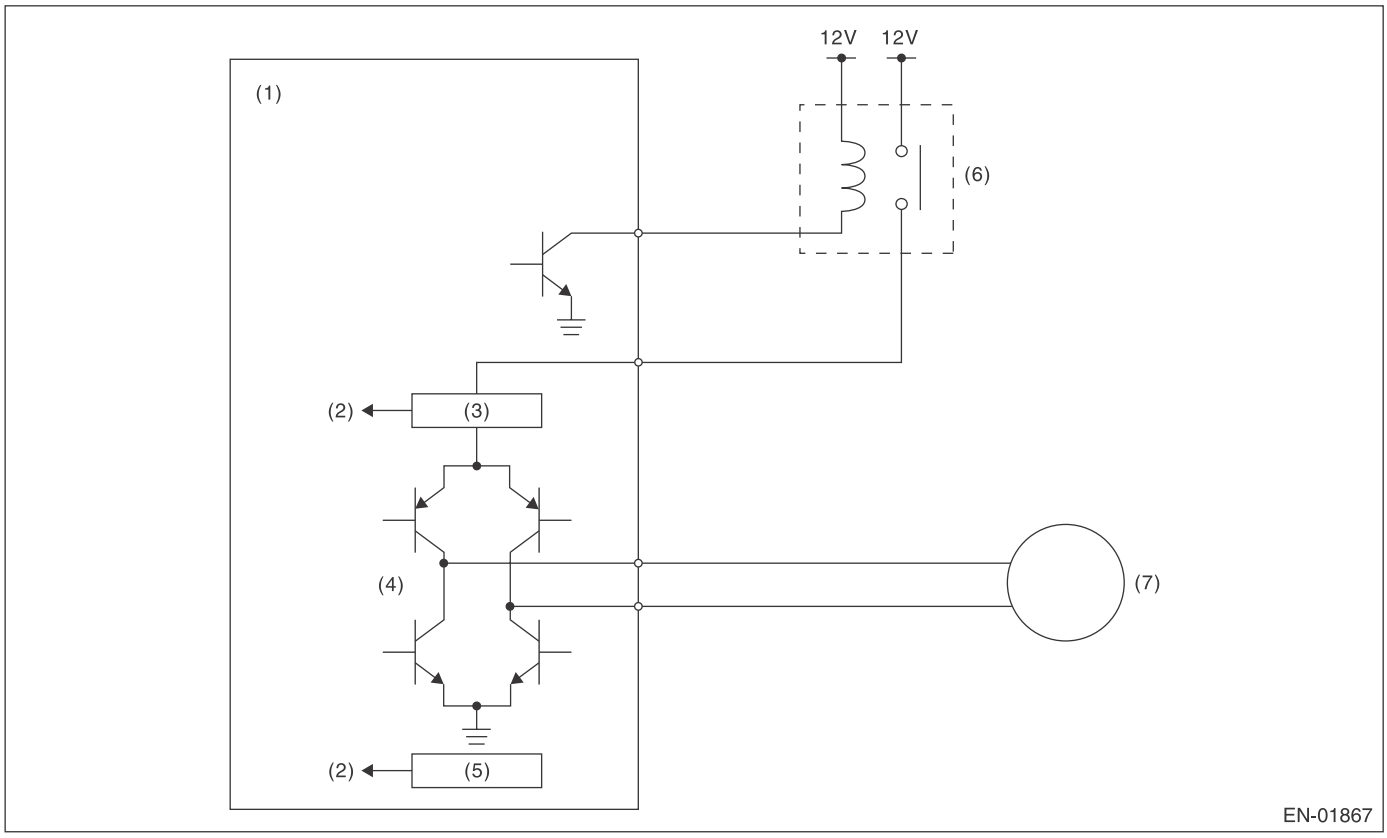

(1) Engine control module (ECM)
(2) Detecting circuit
(3) Overcurrent detection circuit
(4) Drive circuit
(5) Temperature detection circuit
(6) Electronic throttle control relay
(7) Motor

3. ENABLE CONDITION

Secondary Parameters	Enable Conditions
Under control of electronic throttle control	ON
CPU communication line sub → main normal judgment	Normal

4. GENERAL DRIVING CYCLE

Always perform the diagnosis continuously.

5. DIAGNOSTIC METHOD

- **Abnormality Judgment**

If the duration of time while the following conditions are met is longer than the time indicated, judge as NG.

Judgment Value

Malfunction Criteria	Threshold Value
Motor current or Drive circuit inner temperature	> 8 A > 175°C (347°F)

Time Needed for Diagnosis: 512 ms
Malfunction Indicator Light Illumination: Illuminates as soon as a malfunction occurs.

- **Normality Judgment**

Judge as OK and clear the NG if the continuous time while the following conditions are established is more than the predetermined time.

Judgment Value

Malfunction Criteria	Threshold Value
Motor current	≤ 8 A
Drive circuit inner temperature	≤ 175°C (347°F)

Time Needed for Diagnosis: 2000 ms

DW:DTC P2102 THROTTLE ACTUATOR CONTROL MOTOR CIRCUIT LOW

1. OUTLINE OF DIAGNOSIS

Judge as NG when the electronic throttle control power is not supplied even when ECM sets the electronic throttle control relay to ON.

2. COMPONENT DESCRIPTION

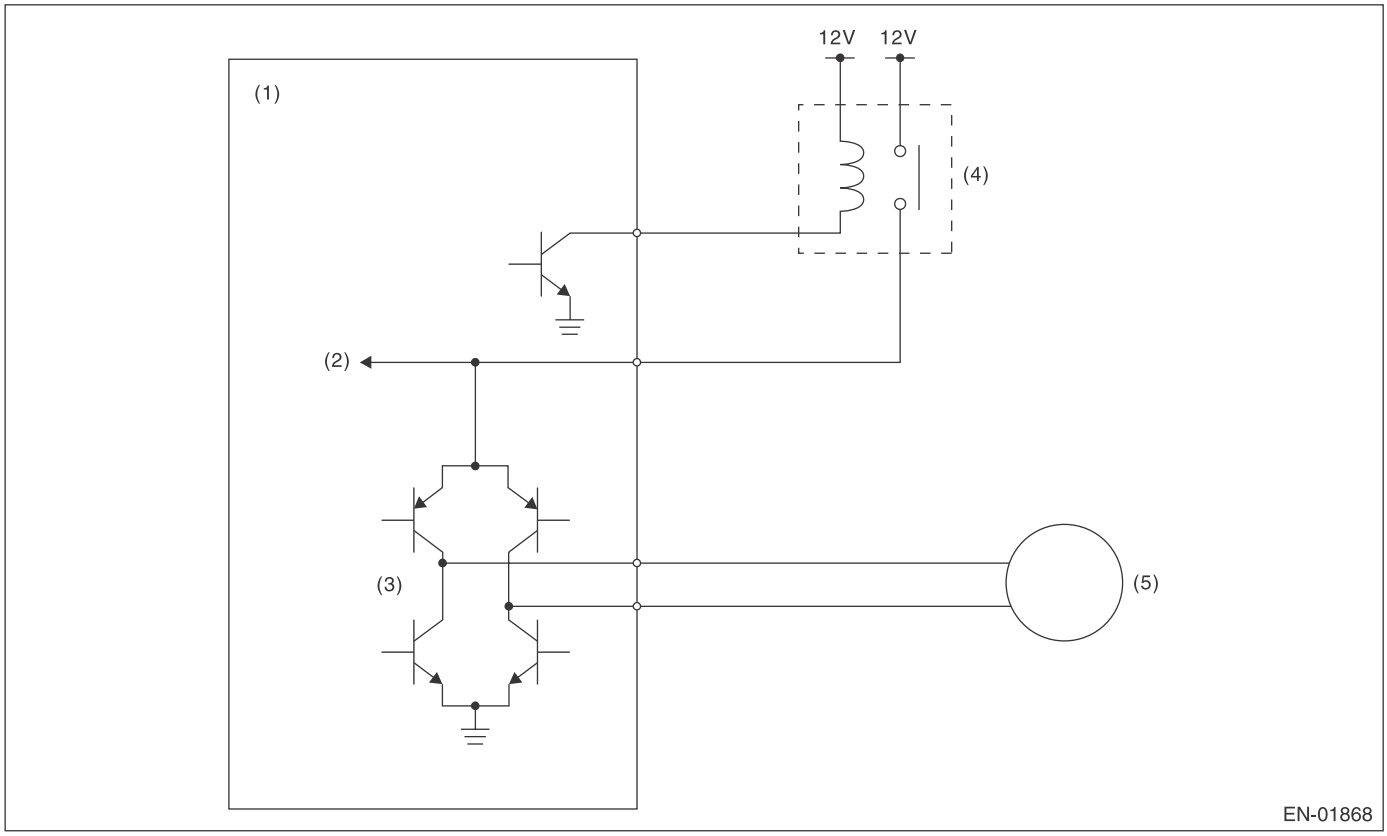

(1) Engine control module (ECM)
(2) Voltage detection circuit
(3) Drive circuit
(4) Electronic throttle control relay
(5) Motor

3. ENABLE CONDITION

Secondary Parameters	Enable Conditions
Battery voltage	≥ 11 V
Electronic throttle control relay output	ON

4. GENERAL DRIVING CYCLE

Always perform the diagnosis continuously.

5. DIAGNOSTIC METHOD

- **Abnormality Judgment**

If the duration of time while the following conditions are met is longer than the time indicated, judge as NG.

Judgment Value

Malfunction Criteria	Threshold Value
Motor power voltage	≤ 5 V

Time Needed for Diagnosis: 352 ms
Malfunction Indicator Light Illumination: Illuminates as soon as a malfunction occurs.

- **Normality Judgment**

Judge as OK and clear the NG if the continuous time while the following conditions are established is more than the predetermined time.

Judgment Value

Malfunction Criteria	Threshold Value
Motor power voltage	> 5 V

Time Needed for Diagnosis: 2000 ms

DX:DTC P2103 THROTTLE ACTUATOR CONTROL MOTOR CIRCUIT HIGH

1. OUTLINE OF DIAGNOSIS

Judge as NG when the electronic throttle control power is supplied even when ECM sets the electronic throttle control relay to OFF.

2. COMPONENT DESCRIPTION

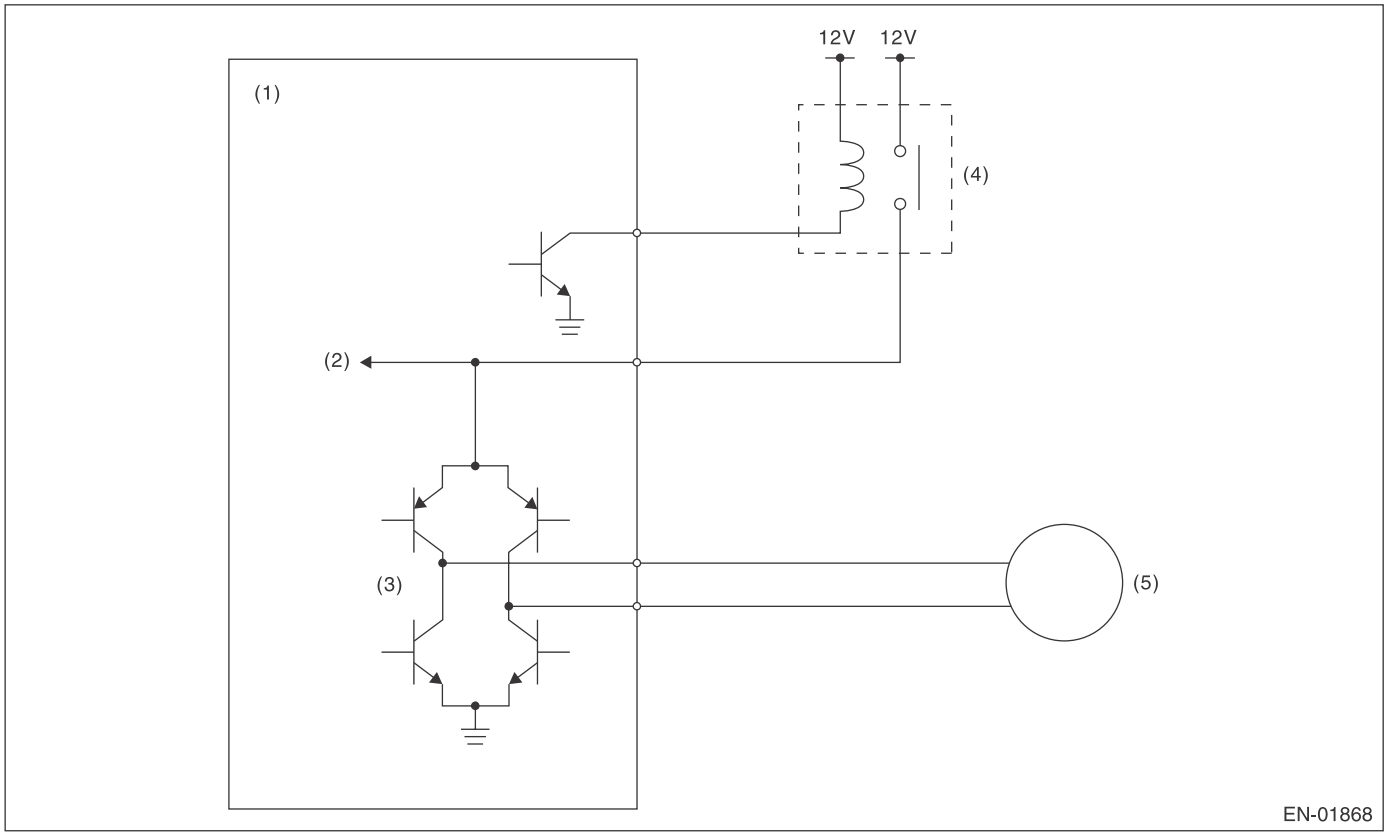

(1) Engine control module (ECM)
(2) Voltage detection circuit
(3) Drive circuit
(4) Electronic throttle control relay
(5) Motor

3. ENABLE CONDITION

Secondary Parameters	Enable Conditions
Battery voltage	≥ 6 V
Electronic throttle control relay output	OFF

4. GENERAL DRIVING CYCLE

- When ignition switch ON → OFF
- Ignition switch OFF → ON (Only after clearing memory)

5. DIAGNOSTIC METHOD

- **Abnormality Judgment**

If the duration of time while the following conditions are met is longer than the time indicated, judge as NG.

Judgment Value

Malfunction Criteria	Threshold Value
Motor power voltage	≥ 5 V

Time Needed for Diagnosis: 600 ms
Malfunction Indicator Light Illumination: Illuminates as soon as a malfunction occurs.

- **Normality Judgment**

Judge as OK and clear the NG if the continuous time while the following conditions are established is more than the predetermined time.

Judgment Value

Malfunction Criteria	Threshold Value
Motor power voltage	< 5 V

Time Needed for Diagnosis: 400 ms

DY:DTC P2109 THROTTLE/PEDAL POSITION SENSOR “A” MINIMUM STOP PERFORMANCE

1. OUTLINE OF DIAGNOSIS

Judge as NG when full close point learning cannot conducted or abnormal value is detected.

2. COMPONENT DESCRIPTION

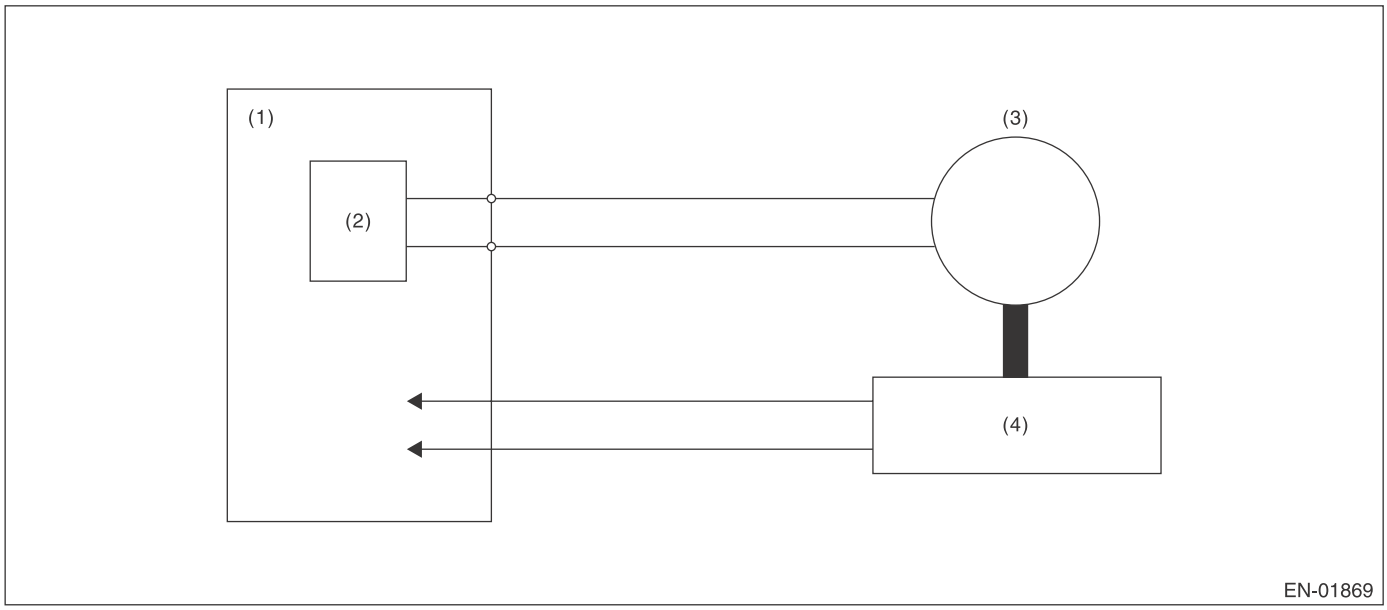

(1) Engine control module (ECM)
(2) Drive circuit
(3) Motor
(4) Throttle position sensor

3. ENABLE CONDITION

Secondary Parameters	Enable Conditions
Ignition switch	ON → OFF
Ignition switch (only after clear memory)	OFF → ON

4. GENERAL DRIVING CYCLE

Perform the diagnosis at full closed point learning.

5. DIAGNOSTIC METHOD

- **Abnormality Judgment**

If the duration of time while the following conditions are met is longer than the time indicated, judge as NG.

Judgment Value

Malfunction Criteria	Threshold Value
Throttle sensor opening angle at full close point learning	< 9.884 ° or > 20.116 °
or	
Throttle opening angle when the ignition switch is ON – Throttle minimum stop position	< 0.887 °

Time Needed for Diagnosis: 8 ms — 80 ms
Malfunction Indicator Light Illumination: Illuminates as soon as a malfunction occurs.

- **Normality Judgment**

Judge as OK and clear the NG if the continuous time while the following conditions are established is more than the predetermined time.

Judgment Value

Malfunction Criteria	Threshold Value
Throttle sensor opening angle at full close point learning	≥ 9.884 ° and ≤ 20.116 °
Throttle opening angle when the ignition switch is ON – Throttle minimum stop position	≥ 0.887 °

Time Needed for Diagnosis: 8 ms

DZ:DTC P2122 THROTTLE/PEDAL POSITION SENSOR/SWITCH “D” CIRCUIT LOW INPUT

1. OUTLINE OF DIAGNOSIS

Detect the open or short circuit of accelerator pedal position sensor 1.
Judge as NG if out of specification.

2. COMPONENT DESCRIPTION

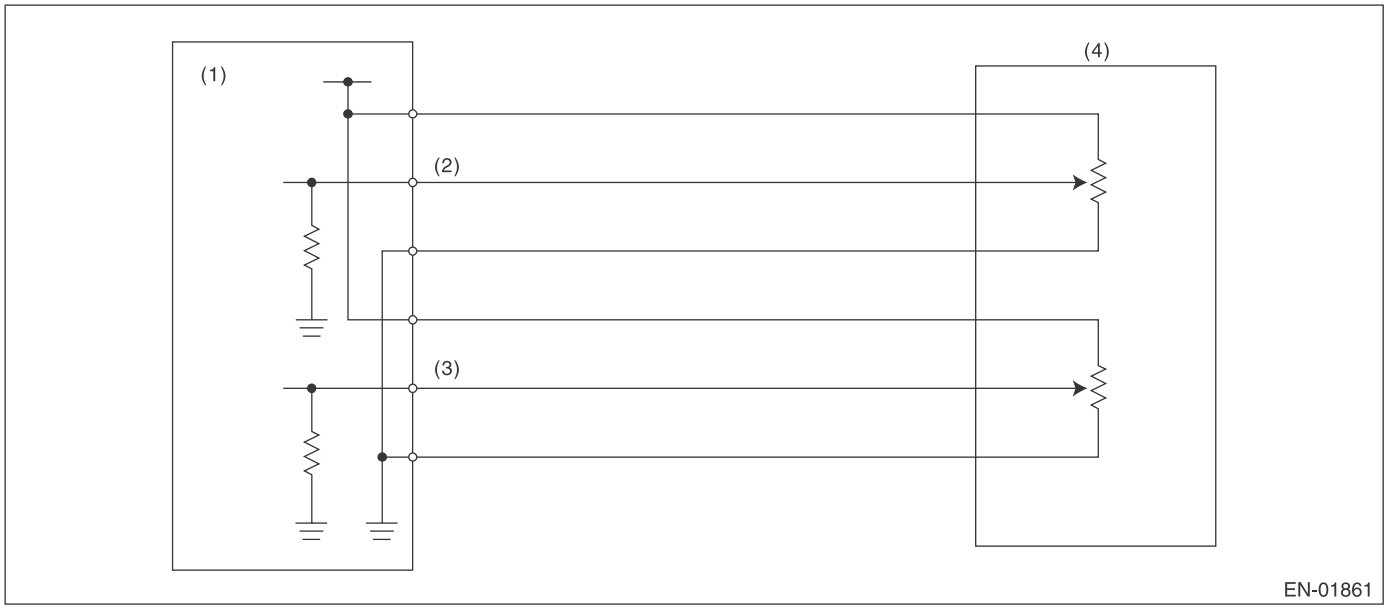

(1) Engine control module (ECM)
(2) Accelerator pedal position sensor 1 signal
(3) Accelerator pedal position sensor 2 signal
(4) Accelerator pedal position sensor

3. ENABLE CONDITION

Secondary Parameters	Enable Conditions
Ignition switch	ON
Battery voltage	≥ 6 V

4. GENERAL DRIVING CYCLE

Always perform the diagnosis continuously.

5. DIAGNOSTIC METHOD

- **Abnormality Judgment**

If the duration of time while the following conditions are met is longer than the time indicated, judge as NG.

Judgment Value

Malfunction Criteria	Threshold Value
Sensor 1 input voltage	< 0.217 V

Time Needed for Diagnosis: 100 ms
Malfunction Indicator Light Illumination: Illuminates as soon as a malfunction occurs.

- **Normality Judgment**

Judge as OK and clear the NG if the continuous time while the following conditions are established is more than the predetermined time.

Judgment Value

Malfunction Criteria	Threshold Value
Sensor 1 input voltage	≥ 0.217 V

Time Needed for Diagnosis: 100 ms

EA:DTC P2123 THROTTLE/PEDAL POSITION SENSOR/SWITCH “D” CIRCUIT HIGH INPUT

1. OUTLINE OF DIAGNOSIS

Detect the open or short circuit of accelerator pedal position sensor 1.
Judge as NG if out of specification.

2. COMPONENT DESCRIPTION

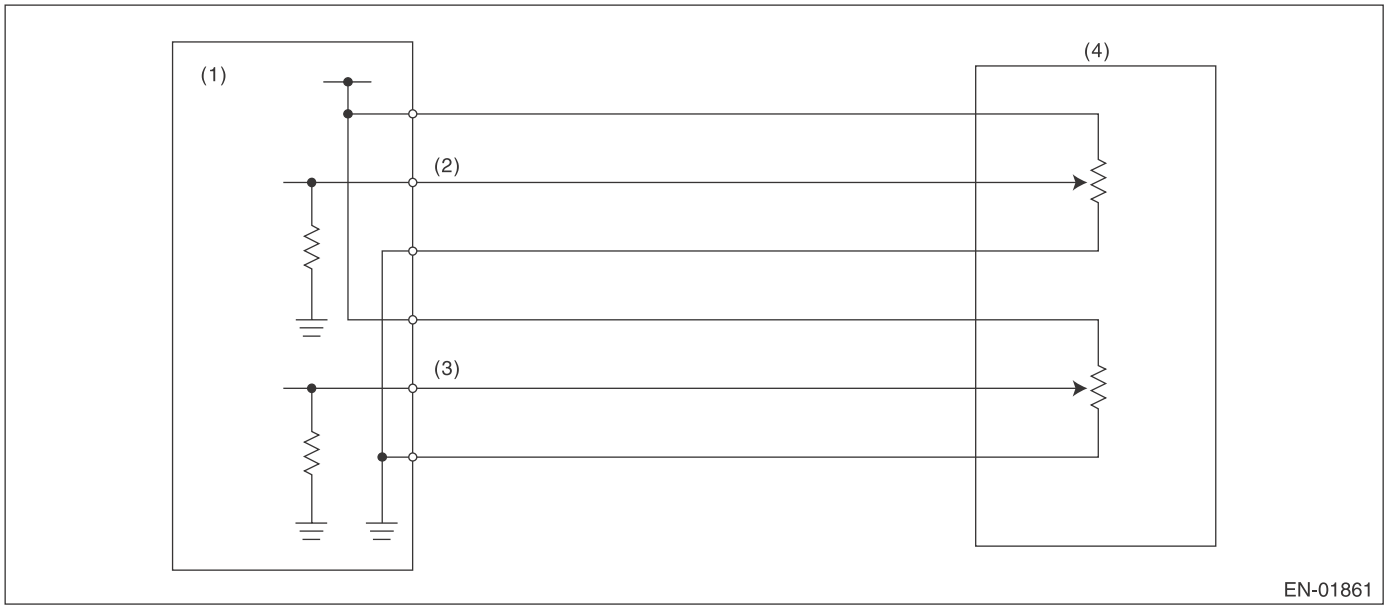

(1) Engine control module (ECM)
(2) Accelerator pedal position sensor 1 signal
(3) Accelerator pedal position sensor 2 signal
(4) Accelerator pedal position sensor

3. ENABLE CONDITION

Secondary Parameters	Enable Conditions
Ignition switch	ON
Battery voltage	≥ 6 V

4. GENERAL DRIVING CYCLE

Always perform the diagnosis continuously.

5. DIAGNOSTIC METHOD

- **Abnormality Judgment**

If the duration of time while the following conditions are met is longer than the time indicated, judge as NG.

Judgment Value

Malfunction Criteria	Threshold Value
Sensor 1 input voltage	≥ 4.783 V

Time Needed for Diagnosis: 32 ms
Malfunction Indicator Light Illumination: Illuminates as soon as a malfunction occurs.

- **Normality Judgment**

Judge as OK and clear the NG if the continuous time while the following conditions are established is more than the predetermined time.

Judgment Value

Malfunction Criteria	Threshold Value
Sensor 1 input voltage	< 4.783 V

Time Needed for Diagnosis: 32 ms

EB:DTC P2127 THROTTLE/PEDAL POSITION SENSOR/SWITCH “E” CIRCUIT LOW INPUT

1. OUTLINE OF DIAGNOSIS

Detect the open or short circuit of accelerator pedal position sensor 2.
Judge as NG if out of specification.

2. COMPONENT DESCRIPTION

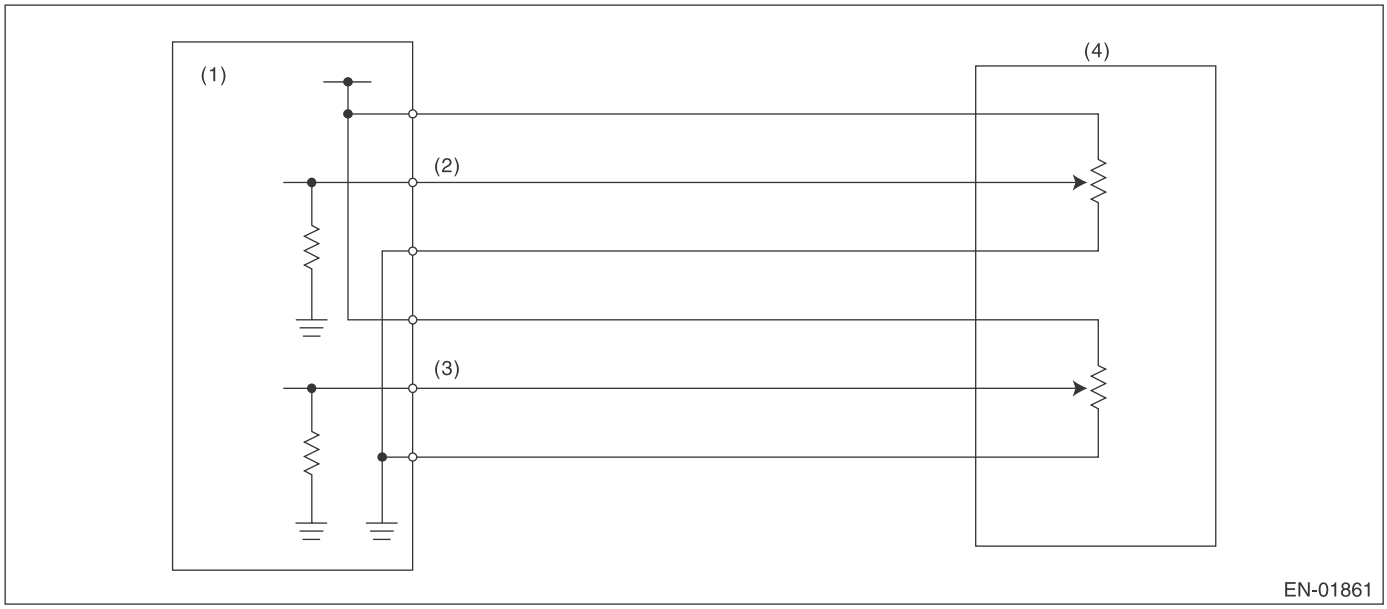

(1) Engine control module (ECM)
(2) Accelerator pedal position sensor 1 signal
(3) Accelerator pedal position sensor 2 signal
(4) Accelerator pedal position sensor

3. ENABLE CONDITION

Secondary Parameters	Enable Conditions
Ignition switch	ON
Battery voltage	≥ 6 V

4. GENERAL DRIVING CYCLE

Always perform the diagnosis continuously.

5. DIAGNOSTIC METHOD

- **Abnormality Judgment**

If the duration of time while the following conditions are met is longer than the time indicated, judge as NG.

Judgment Value

Malfunction Criteria	Threshold Value
Sensor 2 input voltage	< 0.217 V

Time Needed for Diagnosis: 100 ms
Malfunction Indicator Light Illumination: Illuminates as soon as a malfunction occurs.

- **Normality Judgment**

Judge as OK and clear the NG if the continuous time while the following conditions are established is more than the predetermined time.

Judgment Value

Malfunction Criteria	Threshold Value
Sensor 2 input voltage	≥ 0.217 V

Time Needed for Diagnosis: 100 ms

EC:DTC P2128 THROTTLE/PEDAL POSITION SENSOR/SWITCH “E” CIRCUIT HIGH INPUT

1. OUTLINE OF DIAGNOSIS

Detect the open or short circuit of accelerator pedal position sensor 2.
Judge as NG if out of specification.

2. COMPONENT DESCRIPTION

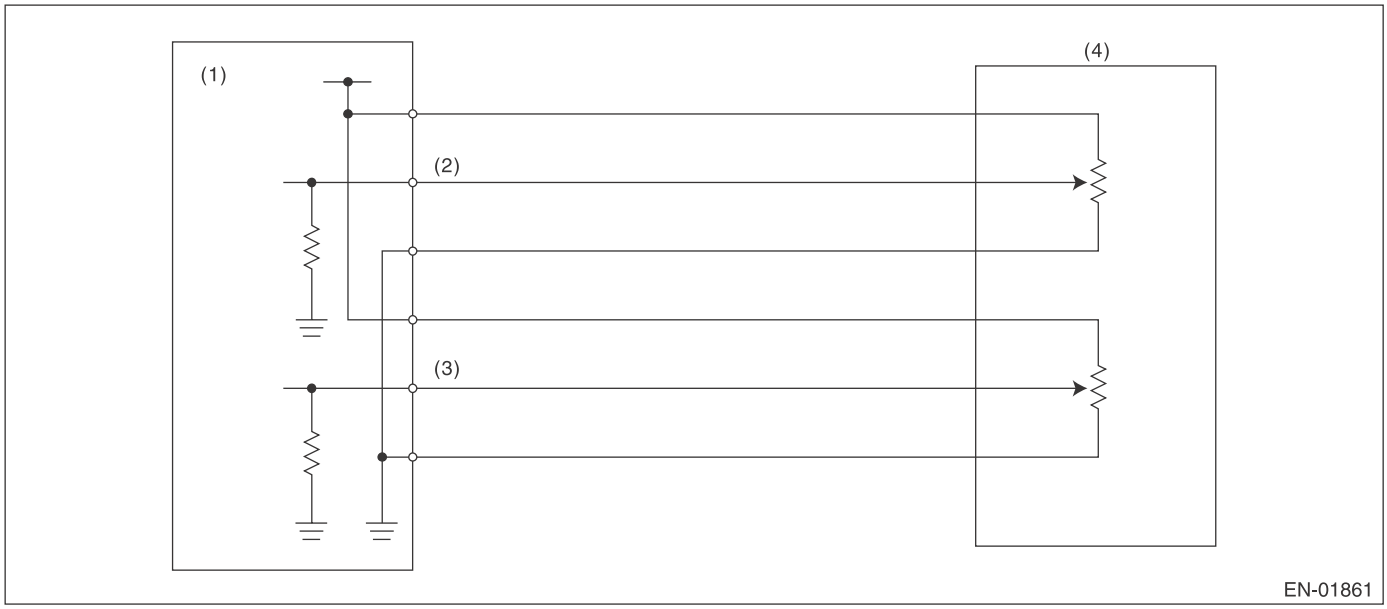

(1) Engine control module (ECM)
(2) Accelerator pedal position sensor 1 signal
(3) Accelerator pedal position sensor 2 signal
(4) Accelerator pedal position sensor

3. ENABLE CONDITION

Secondary Parameters	Enable Conditions
Ignition switch	ON
Battery voltage	≥ 6 V

4. GENERAL DRIVING CYCLE

Always perform the diagnosis continuously.

5. DIAGNOSTIC METHOD

- **Abnormality Judgment**

If the duration of time while the following conditions are met is longer than the time indicated, judge as NG.

Judgment Value

Malfunction Criteria	Threshold Value
Sensor 2 input voltage	≥ 4.783 V

Time Needed for Diagnosis: 100 ms
Malfunction Indicator Light Illumination: Illuminates as soon as a malfunction occurs.

- **Normality Judgment**

Judge as OK and clear the NG if the continuous time while the following conditions are established is more than the predetermined time.

Judgment Value

Malfunction Criteria	Threshold Value
Sensor 2 input voltage	< 4.783 V

Time Needed for Diagnosis: 100 ms

ED:DTC P2135 THROTTLE/PEDAL POSITION SENSOR/SWITCH “A”/“B” VOLTAGE CORRELATION

1. OUTLINE OF DIAGNOSIS

Judge as NG when the signal level of throttle position sensor 1 is different from the throttle position sensor 2.

2. COMPONENT DESCRIPTION

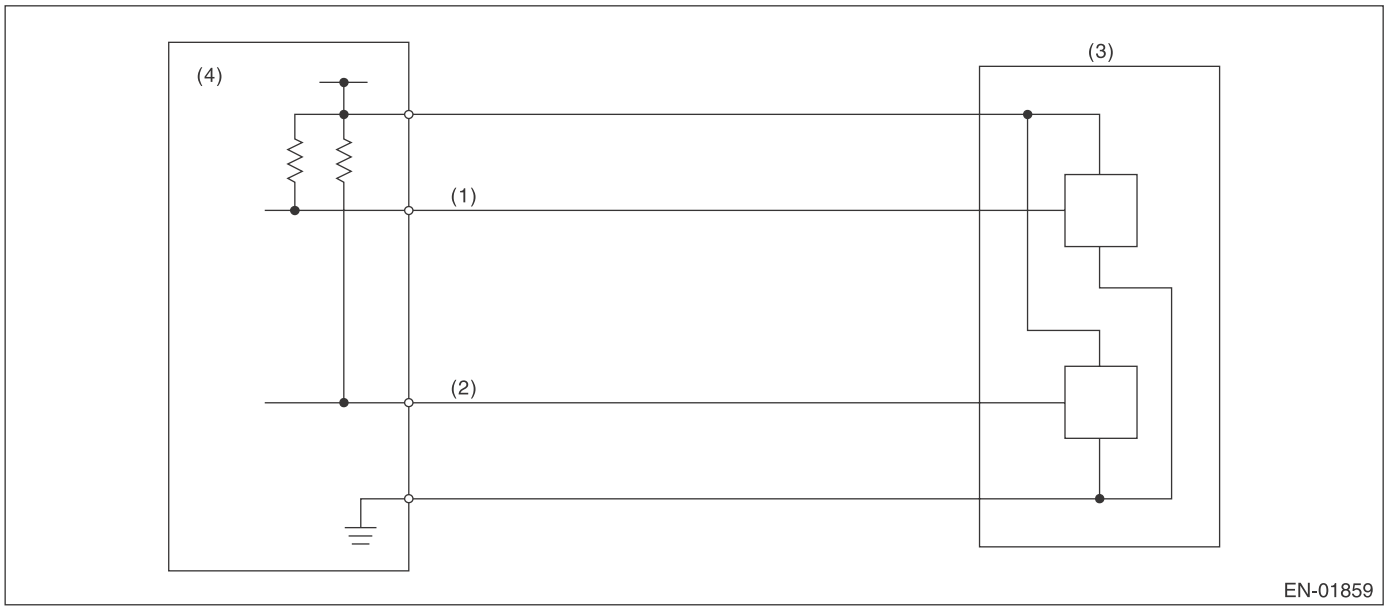

(1) Throttle position sensor 1 signal
(2) Throttle position sensor 2 signal
(3) Throttle position sensor
(4) Engine control module (ECM)

3. ENABLE CONDITION

Secondary Parameters	Enable Conditions
Ignition switch	ON
Battery voltage	≥ 6 V

4. GENERAL DRIVING CYCLE

Always perform the diagnosis continuously.

5. DIAGNOSTIC METHOD

• Abnormality Judgment

If the duration of time while the following conditions are met is longer than the time indicated, judge as NG.

Judgment Value

Malfunction Criteria	Threshold Value
Signal difference between two sensors	Within the NG range of **judgment value detail**

Details of Judgment Value

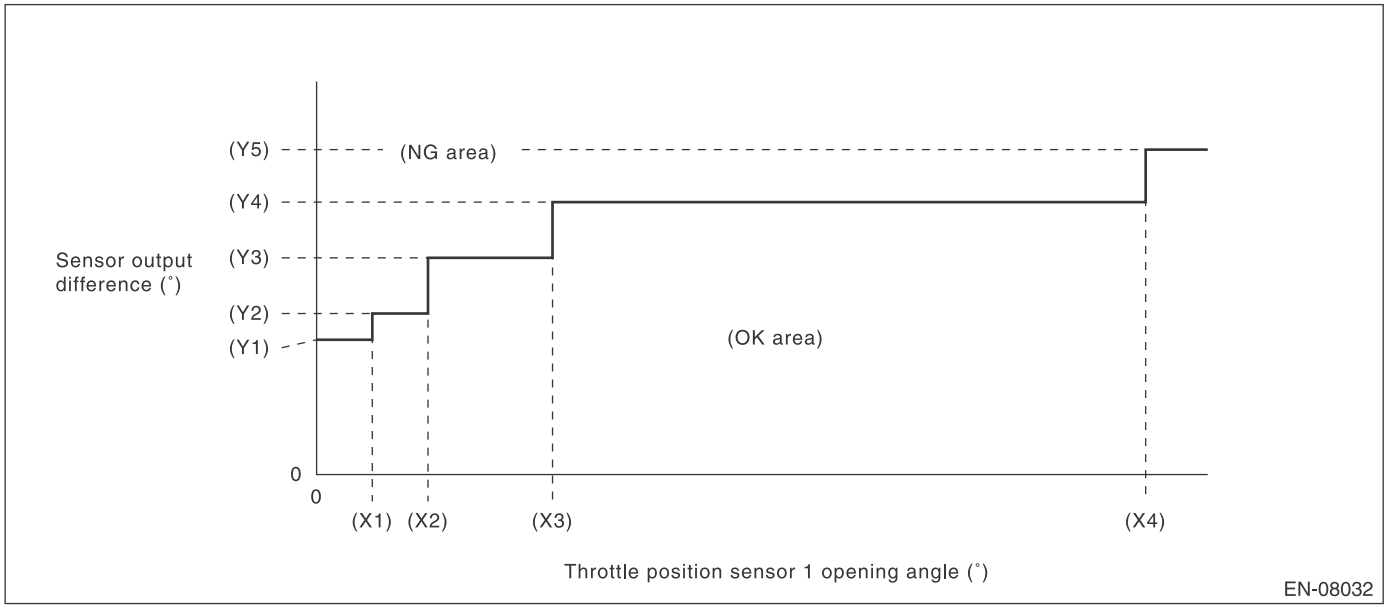

(X1) 2.125 °
(X2) 4.25 °
(X3) 9 °
(X4) 31.625 °

(Y1) 5.15 °
(Y2) 6.15 °
(Y3) 8.28 °
(Y4) 10.4 °
(Y5) 12.4 °

Time Needed for Diagnosis: 212 ms
Malfunction Indicator Light Illumination: Illuminates as soon as a malfunction occurs.

• Normality Judgment

Judge as OK and clear the NG if the continuous time while the following conditions are established is more than the predetermined time.

Judgment Value

Malfunction Criteria	Threshold Value
Signal difference between two sensors	Within the OK range of **judgment value detail**

Time Needed for Diagnosis: 24 ms

EE:DTC P2138 THROTTLE/PEDAL POSITION SENSOR/SWITCH “D”/“E” VOLTAGE CORRELATION

1. OUTLINE OF DIAGNOSIS

Judge as NG when the signal level of throttle position sensor 1 is different from the throttle position sensor 2.

2. COMPONENT DESCRIPTION

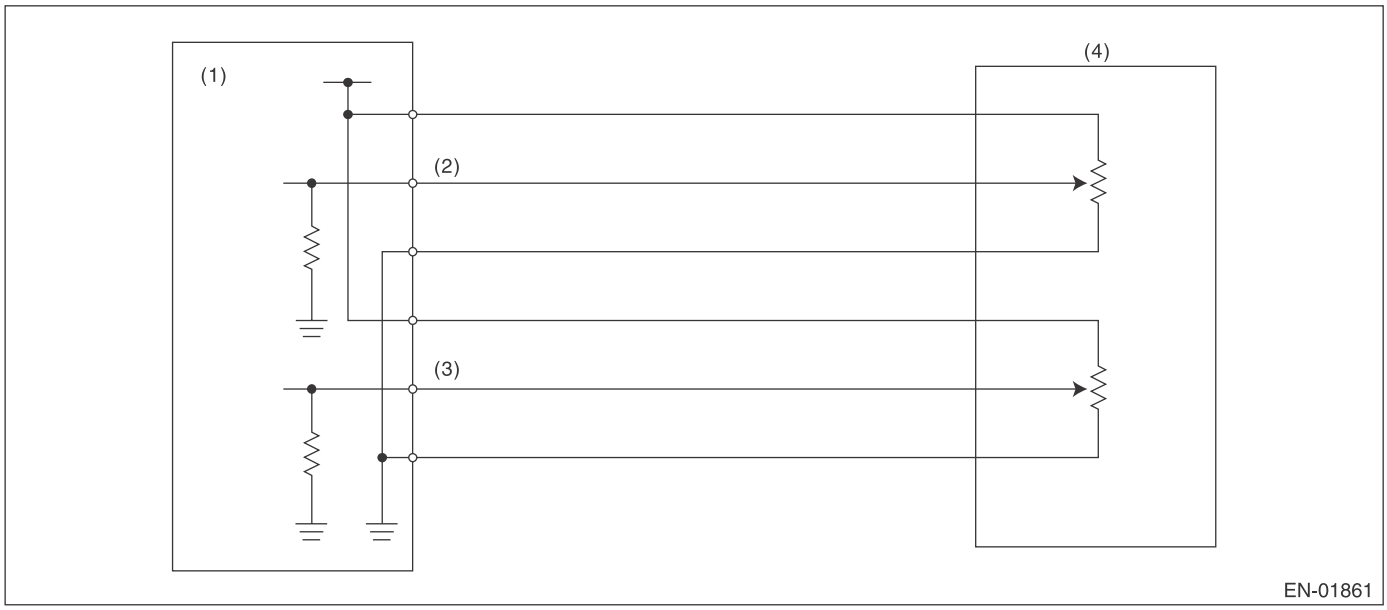

(1) Engine control module (ECM)
(2) Accelerator pedal position sensor 1 signal
(3) Accelerator pedal position sensor 2 signal
(4) Accelerator pedal position sensor

3. ENABLE CONDITION

Secondary Parameters	Enable Conditions
Ignition switch	ON
Battery voltage	≥ 6 V

4. GENERAL DRIVING CYCLE

Always perform the diagnosis continuously.

5. DIAGNOSTIC METHOD

• Abnormality Judgment

If the duration of time while the following conditions are met is longer than the time indicated, judge as NG.

Judgment Value

Malfunction Criteria	Threshold Value
Signal difference between two sensors	Within the NG range of **judgment value detail**

Details of Judgment Value

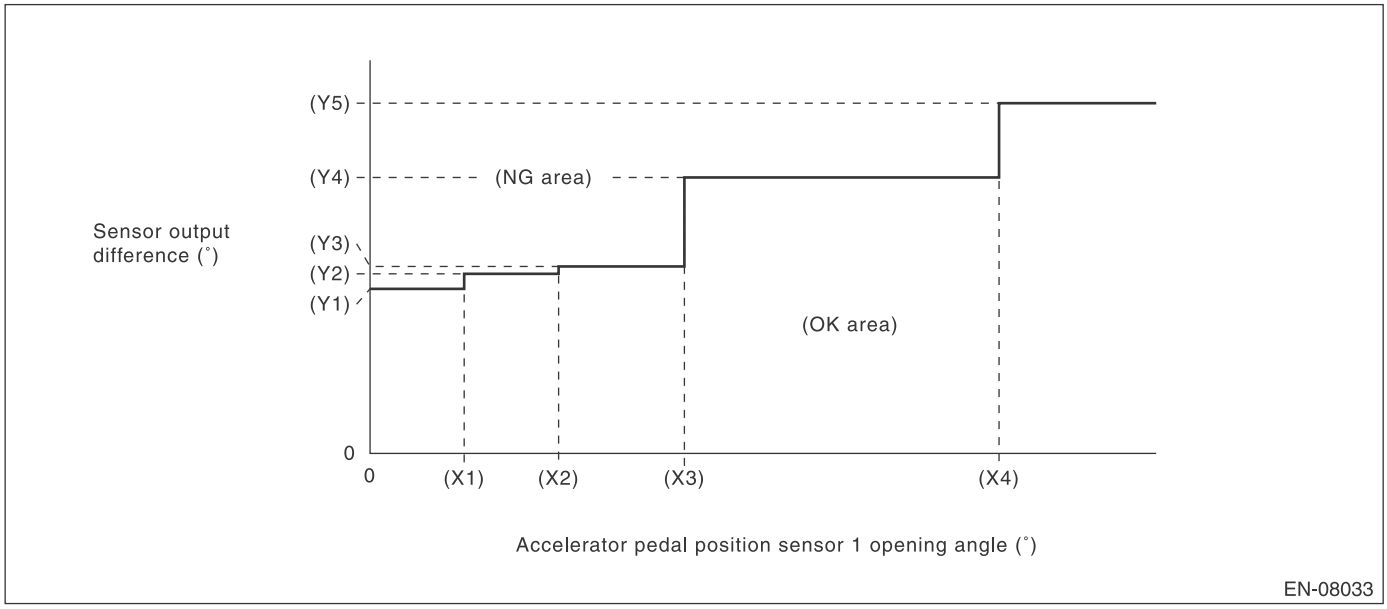

(X1) 0.6 °
(X2) 1.2 °
(X3) 2 °
(X4) 4 °

(Y1) 1.465 °
(Y2) 1.597 °
(Y3) 1.663 °
(Y4) 2.455 °
(Y5) 3.116 °

Time Needed for Diagnosis: 116 ms
Malfunction Indicator Light Illumination: Illuminates as soon as a malfunction occurs.

• Normality Judgment

Judge as OK and clear the NG if the continuous time while the following conditions are established is more than the predetermined time.

Judgment Value

Malfunction Criteria	Threshold Value
Signal difference between two sensors	Within the OK range of **judgment value detail**

Time Needed for Diagnosis: 116 ms

EF:DTC P2227 BAROMETRIC PRESSURE CIRCUIT RANGE/PERFORMANCE

1. OUTLINE OF DIAGNOSIS

Detect the malfunction of barometric pressure sensor output property.
Judge as NG when the barometric pressure sensor output is largely different from the intake manifold pressure at engine start.

2. COMPONENT DESCRIPTION

The barometric pressure sensor is built into the ECM.

3. ENABLE CONDITIONS

Secondary Parameters	Enable Conditions
Engine speed	< 300 rpm
Vehicle speed	< 1 km/h (0.6 MPH)

4. GENERAL DRIVING CYCLE

Perform the diagnosis once at ignition switch ON.

5. DIAGNOSTIC METHOD

- **Abnormality Judgment**

If the duration of time while the following conditions are met is longer than the time indicated, judge as NG.

Judgment Value

Malfunction Criteria	Threshold Value
|Barometric pressure – Intake manifold pressure|	≥ 26.7 kPa (200 mmHg, 7.9 inHg)
|Intake manifold pressure at engine start – Intake manifold pressure|	< 1.3 kPa (9.99 mmHg, 0.4 inHg)

Time Needed for Diagnosis: 328 ms
Malfunction Indicator Light Illumination: Illuminates when malfunction occurs in 2 continuous driving cycles.

- **Normality Judgment**

Judge as OK and clear the NG if the continuous time while the following conditions are established is more than the predetermined time.

Judgment Value

Malfunction Criteria	Threshold Value
|Barometric pressure – Intake manifold pressure|	< 26.7 kPa (200 mmHg, 7.9 inHg)

Time Needed for Diagnosis: 262 ms

EG:DTC P2228 BAROMETRIC PRESSURE CIRCUIT LOW

1. OUTLINE OF DIAGNOSIS

Detect the open/short circuit of the barometric pressure sensor.
Judge as NG if out of specification.

2. COMPONENT DESCRIPTION

The barometric pressure sensor is built into the ECM.

3. ENABLE CONDITIONS

Secondary Parameters	Enable Conditions
None	

4. GENERAL DRIVING CYCLE

Always perform the diagnosis continuously.

5. DIAGNOSTIC METHOD

- **Abnormality Judgment**

If the duration of time while the following conditions are met is longer than the time indicated, judge as NG.

Judgment Value

Malfunction Criteria	Threshold Value
Output voltage	< 1.707 V

Time Needed for Diagnosis: 500 ms
Malfunction Indicator Light Illumination: Illuminates as soon as a malfunction occurs.

- **Normality Judgment**

Judge as OK and clear the NG if the continuous time while the following conditions are established is more than the predetermined time.

Judgment Value

Malfunction Criteria	Threshold Value
Output voltage	≥ 1.707 V

Time Needed for Diagnosis: Less than 1 second

EH:DTC P2229 BAROMETRIC PRESSURE CIRCUIT HIGH

1. OUTLINE OF DIAGNOSIS

Detect the open/short circuit of the barometric pressure sensor.
Judge as NG if out of specification.

2. COMPONENT DESCRIPTION

The barometric pressure sensor is built into the ECM.

3. ENABLE CONDITIONS

Secondary Parameters	Enable Conditions
None	

4. GENERAL DRIVING CYCLE

Always perform the diagnosis continuously.

5. DIAGNOSTIC METHOD

- **Abnormality Judgment**

If the duration of time while the following conditions are met is longer than the time indicated, judge as NG.

Judgment Value

Malfunction Criteria	Threshold Value
Output voltage	≥ 4.234 V

Time Needed for Diagnosis: 500 ms
Malfunction Indicator Light Illumination: Illuminates as soon as a malfunction occurs.

- **Normality Judgment**

Judge as OK and clear the NG if the continuous time while the following conditions are established is more than the predetermined time.

Judgment Value

Malfunction Criteria	Threshold Value
Output voltage	< 4.234 V

Time Needed for Diagnosis: Less than 1 second

EI: DTC P2419 EVAPORATIVE EMISSION SYSTEM SWITCHING VALVE CONTROL CIRCUIT LOW

1. OUTLINE OF DIAGNOSIS

Detect open or short circuit of the purge control solenoid valve 2.
Judge as NG when the ECM output level differs from the actual terminal level.

2. ENABLE CONDITIONS

Secondary Parameters	Enable Conditions
None	

3. GENERAL DRIVING CYCLE

Always perform the diagnosis continuously.

4. DIAGNOSTIC METHOD

- **Abnormality Judgment**

If the duration of time while the following conditions are met is longer than the time indicated, judge as NG.

Judgment Value

Malfunction Criteria	Threshold Value
Battery voltage	≥ 10.9 V
Elapsed time after starting the engine	≥ 1 second
Terminal output voltage when ECM outputs OFF signal	Low

Time Needed for Diagnosis: 2500 ms
Malfunction Indicator Light Illumination: Illuminates as soon as a malfunction occurs.

- **Normality Judgment**

Judge as OK and clear the NG if the continuous time while the following conditions are established is more than the predetermined time.

Judgment Value

Malfunction Criteria	Threshold Value
Battery voltage	≥ 10.9 V
Elapsed time after starting the engine	≥ 1 second
Terminal output voltage when ECM outputs OFF signal	High

Time Needed for Diagnosis: Less than 1 second

EJ: DTC P2420 EVAPORATIVE EMISSION SYSTEM SWITCHING VALVE CONTROL CIRCUIT HIGH

1. OUTLINE OF DIAGNOSIS

Detect open or short circuit of the purge control solenoid valve 2.
Judge as NG when the ECM output level differs from the actual terminal level.

2. ENABLE CONDITIONS

Secondary Parameters	Enable Conditions
None	

3. GENERAL DRIVING CYCLE

Always perform the diagnosis continuously.

4. DIAGNOSTIC METHOD

- **Abnormality Judgment**

If the duration of time while the following conditions are met is longer than the time indicated, judge as NG.

Judgment Value

Malfunction Criteria	Threshold Value
Battery voltage	≥ 10.9 V
Elapsed time after starting the engine	≥ 1 second
Terminal output voltage when ECM outputs ON signal	High

Time Needed for Diagnosis: 2500 ms
Malfunction Indicator Light Illumination: Illuminates as soon as a malfunction occurs.

- **Normality Judgment**

Judge as OK and clear the NG if the continuous time while the following conditions are established is more than the predetermined time.

Judgment Value

Malfunction Criteria	Threshold Value
Battery voltage	≥ 10.9 V
Elapsed time after starting the engine	≥ 1 second
Terminal output voltage when ECM outputs ON signal	Low

Time Needed for Diagnosis: Less than 1 second

EK:DTC U0073 CAN FAILURE, BUS 'OFF' DETECTION

1. OUTLINE OF DIAGNOSIS

Detect malfunction of CAN communication.
When CAN communications is not possible, and CAN communications with TCM, VDC CM and body integrated unit is not possible, judge as NG if data from the TCM, VDC CM and body integrated unit are not normal.

2. COMPONENT DESCRIPTION

ECM, TCM, VDC CM and body integrated unit are connected by high speed CAN.

(Common Specifications)
CAN Protocol 2.0 B (Active)
Frame Format: 11 Bit ID Frame (Standard Frame)

(High speed CAN)
Conforms to ISO11898
Communication Speed: 500 kbps

3. ENABLE CONDITIONS

Secondary Parameters	Enable Conditions
None	

4. GENERAL DRIVING CYCLE

Perform the diagnosis continuously after starting the engine.

5. DIAGNOSTIC METHOD

• Abnormality Judgment
Judge as NG when the following conditions are established.

Judgment Value

Malfunction Criteria	Threshold Value
Battery voltage	> 10.9 V
Starter switch	OFF
Engine	run
bus off flag or error warning flag	set (error)
or	
ID received from control module connected to driving system CAN	None during 500 milliseconds
or	
Data updated from control module connected to driving system CAN	None during 2000 milliseconds

Time Needed for Diagnosis: 2 seconds
Malfunction Indicator Light Illumination: Illuminates as soon as a malfunction occurs.

• Normality Judgment
Judge as OK and clear the NG if the continuous time while the following conditions are established is more than the predetermined time.

Judgment Value

Malfunction Criteria	Threshold Value
Battery voltage	> 10.9 V
Starter switch	OFF
Engine	run
bus off flag or error warning flag	clear (No error)
ID received from control module connected to driving system CAN	Yes
Data updated from control module connected to driving system CAN	Yes

Time Needed for Diagnosis: 1000 ms
Malfunction Indicator Light Illumination: Illuminates as soon as a malfunction occurs.

EL:DTC U0101 CAN (TCU) DATA NOT LOADED

1. OUTLINE OF DIAGNOSIS

NOTE:
For the detection standard, refer to DTC U0073. <Ref. to GD(H4DOTC)-228, DTC U0073 CAN FAILURE, BUS 'OFF' DETECTION, Diagnostic Trouble Code (DTC) Detecting Criteria.>

EM:DTC U0122 CAN (VDC) DATA NOT LOADED

1. OUTLINE OF DIAGNOSIS

NOTE:
For the detection standard, refer to DTC U0073. <Ref. to GD(H4DOTC)-228, DTC U0073 CAN FAILURE, BUS 'OFF' DETECTION, Diagnostic Trouble Code (DTC) Detecting Criteria.>

EN:DTC U0140 CAN (BCU) DATA NOT LOADED

1. OUTLINE OF DIAGNOSIS

NOTE:
For the detection standard, refer to DTC U0073. <Ref. to GD(H4DOTC)-228, DTC U0073 CAN FAILURE, BUS 'OFF' DETECTION, Diagnostic Trouble Code (DTC) Detecting Criteria.>

EO:DTC U0402 CAN (TCU) DATA ABNORMAL

1. OUTLINE OF DIAGNOSIS

NOTE:
For the detection standard, refer to DTC U0073. <Ref. to GD(H4DOTC)-228, DTC U0073 CAN FAILURE, BUS 'OFF' DETECTION, Diagnostic Trouble Code (DTC) Detecting Criteria.>

EP:DTC U0416 CAN (VDC) DATA ABNORMAL

1. OUTLINE OF DIAGNOSIS

NOTE:
For the detection standard, refer to DTC U0073. <Ref. to GD(H4DOTC)-228, DTC U0073 CAN FAILURE, BUS 'OFF' DETECTION, Diagnostic Trouble Code (DTC) Detecting Criteria.>

EQ:DTC U0422 CAN (BCU) DATA ABNORMAL

1. OUTLINE OF DIAGNOSIS

NOTE:
For the detection standard, refer to DTC U0073. <Ref. to GD(H4DOTC)-228, DTC U0073 CAN FAILURE, BUS 'OFF' DETECTION, Diagnostic Trouble Code (DTC) Detecting Criteria.>