CHASSIS SECTION

This service manual has been prepared to provide SUBARU service personnel with the necessary information and data for the correct maintenance and repair of SUBARU vehicles.
This manual includes the procedures for maintenance, disassembling, reassembling, inspection and adjustment of components and diagnostics for guidance of experienced mechanics.
Please peruse and utilize this manual fully to ensure complete repair work for satisfying our customers by keeping their vehicle in optimum condition. When replacement of parts during repair work is needed, be sure to use SUBARU genuine parts.

All information, illustration and specifications contained in this manual are based on the latest product information available at the time of publication approval.

FRONT SUSPENSION	FS
REAR SUSPENSION	RS
WHEEL AND TIRE SYSTEM	WT
TIRE PRESSURE MONITORING SYSTEM (DIAGNOSTICS)	TPM(diag)
DIFFERENTIALS	DI
TRANSFER CASE	TC
DRIVE SHAFT SYSTEM	DS
VEHICLE DYNAMICS CONTROL (VDC)	VDC
VEHICLE DYNAMICS CONTROL (VDC) (DIAGNOSTICS)	VDC(diag)
BRAKE	BR
PARKING BRAKE	PB
PARKING BRAKE (DIAGNOSTICS)	PB(diag)
POWER ASSISTED SYSTEM (POWER STEERING)	PS

FUJI HEAVY INDUSTRIES LTD.

FRONT SUSPENSION

FS

Page

1. General Description 2
2. Wheel Alignment 8
3. Cradle 15
4. Front Stabilizer 19
5. Front Ball Joint 20
6. Front Arm 22
7. Front Strut 25
8. General Diagnostic Table 28

1. General Description

A: SPECIFICATION

Tire size			P205/60R16 P215/50R17	P225/50R17 225/45R18	P225/60R17 P215/70R16
Front	Wheel arch height (Tolerance: $^{+12\ mm}_{-24\ mm}$ ($^{+0.47\ in}_{-0.94\ in}$)) mm (in)		403 (15.9)	395 (15.6)	469 (18.5)
	Camber (Tolerance: ±0°45′ Differences between RH and LH: 45′ or less)		–0°30′	–0°15′	0°00′
	Caster (Referential Value)		5°55′	6°00′	5°05′
	Steering angle (Tolerance: ±1.5°)	Inner wheel	37.6°	37.4°	38.4°
		Outer wheel	33.3°	33.0°	34.1°
	Toe-in mm (in)		0±3 (0±0.12) Toe angle (sum of both wheels): 0°±0°15′		
	Kingpin angle (Referential Value)		14°00′	14°15′	12°20′
REAR	Wheel arch height (Tolerance: $^{+12\ mm}_{-24\ mm}$ ($^{+0.47\ in}_{-0.94\ in}$)) mm (in)		392 (15.4)	387 (15.2)	474 (18.7)
	Camber (Tolerance: ±0°45′ Differences between RH and LH: 45′ or less)		–1°00′	–1°10′	0°00′
	Toe-in mm (in)		*2		*1
	Thrust angle (Tolerance: ±0°30′)		0°		

*1: OUTBACK model
2±3 mm (0.08 — 0.12 in) Toe angle (sum of both wheels): 0°10′±0°15′

*2: Except for OUTBACK model
0±3 mm (0±0.12 in) Toe angle (sum of both wheels): 0°±0°15′

NOTE:
• Front and rear toe-in and front camber can be adjusted. Adjust if the toe-in or camber tolerance exceeds specifications.
• For other items indicated in the specifications table, there is no adjustment mechanism. If other items exceed specifications, check the suspension parts and connections for deformation, and replace the parts if defective.

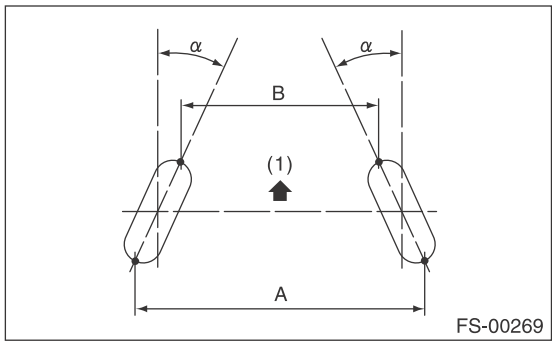

(1) Front
A – B = Positive: Toe-in, Negative: Toe-out
α = Individual toe angles

B: COMPONENT

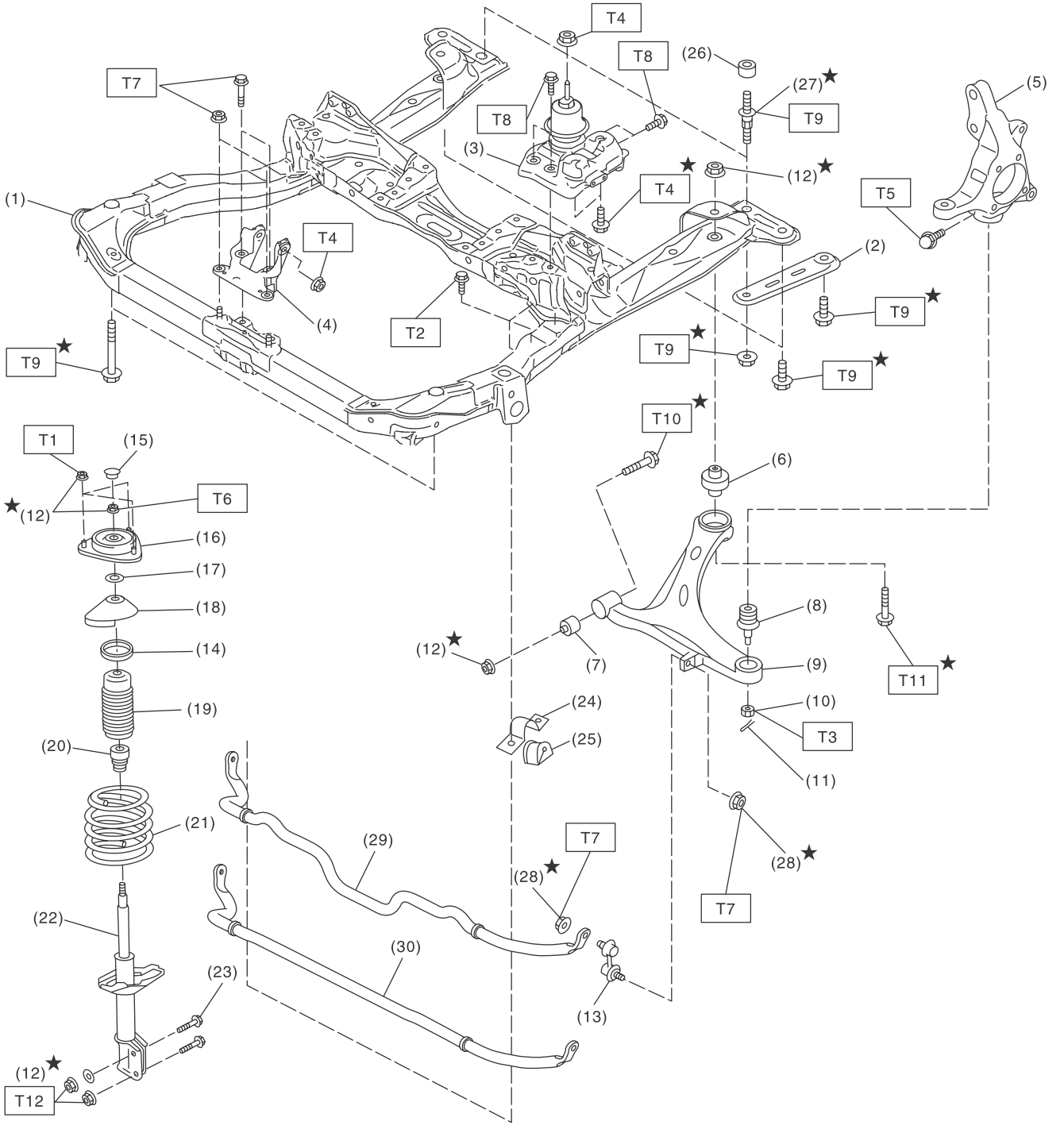

FS-00383

(1) Cradle
(2) Stiffener
(3) Main mounting bracket
(4) Front mounting bracket
(5) Front housing
(6) Rear bushing
(7) Front bushing
(8) Ball joint
(9) Front arm
(10) Castle nut
(11) Cotter pin
(12) Self-locking nut
(13) Stabilizer link
(14) Rubber seat (OUTBACK model only)
(15) Dust seal
(16) Strut mount
(17) SPACER
(18) Upper spring seat
(19) Dust cover
(20) Helper
(21) Coil spring
(22) STRUT
(23) Adjusting bolt
(24) Stabilizer bracket
(25) Stabilizer bushing
(26) STOPPER
(27) Stud bolt
(28) Flange nut
(29) Stabilizer (H4 model)
(30) Stabilizer (H6 model)

Tightening torque:N·m (kgf-m, ft-lb)	
T1:	*20 (2.0, 14.8)*
T2:	*25 (2.5, 18.4)*
T3:	*39 (4.0, 28.8)*
T4:	*45 (4.6, 33.2)*
T5:	*50 (5.1, 36.9)*
T6:	*55 (5.6, 40.6)*
T7:	*60 (6.1, 44.3)*
T8:	*65 (6.6, 47.9)*
T9:	*75 (7.6, 55.3)*
T10:	*95 (9.7, 70.1)*
T11:	*140 (14.3, 103.3)*
T12:	*155 (15.8, 114.3)*

C: CAUTION

- Wear appropriate work clothing, including a cap, protective goggles and protective shoes when performing any work.
- Before removal, installation or disassembly, be sure to clarify the failure. Avoid unnecessary removal, installation, disassembly and replacement.
- Use SUBARU genuine grease etc. or equivalent. Do not mix grease etc. of different grades or manufacturers.
- Before securing a part on a vise, place cushioning material such as wood blocks, aluminum plate, or cloth between the part and the vise.
- Be sure to tighten fasteners including bolts and nuts to the specified torque.
- Place shop jacks or rigid racks at the specified points.

D: PREPARATION TOOL

1. SPECIAL TOOL

ILLUSTRATION	TOOL NUMBER	DESCRIPTION	REMARKS
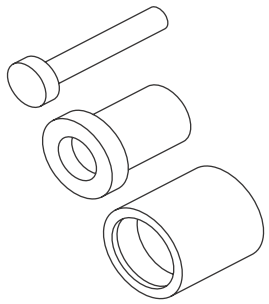 ST-927680000	927680000	INSTALLER & REMOVER SET	Used for replacing front arm front bushing.
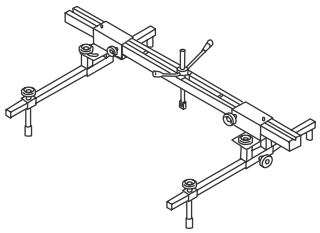 ST99099AJ000	99099AJ000 (Newly adopted tool)	ENGINE HANGER	• Used for hanging power unit. • Used together with CHAIN BALANCER (99099AJ010).
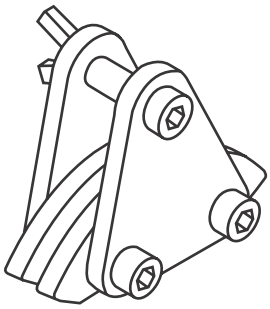 ST99099AJ010	99099AJ010 (Newly adopted tool)	CHAIN BALANCER	• Used for hanging power unit. • Used together with ENGINE HANGER (99099AJ000).
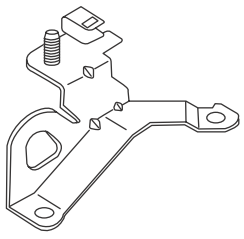 ST10004AA180	10004AA180 (SUBARU genuine part)	HANGER CP ENGINE RR	• Used for hanging power unit. • For H4 - non-turbo model. • SUBARU genuine part

ILLUSTRATION	TOOL NUMBER	DESCRIPTION	REMARKS
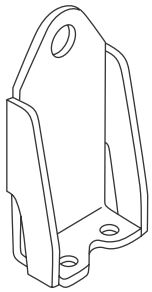 ST18360AA020	18360AA020 (Newly adopted tool)	HANGER	• Used for hanging power unit. • For H6 model.
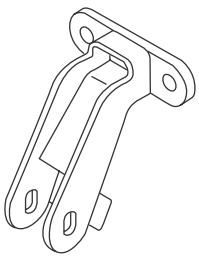 ST41099AJ000	41099AJ000 (Newly adopted tool)	SPECIAL TOOL H4	Used for removing and installing front stabilizer. (for turbo model)
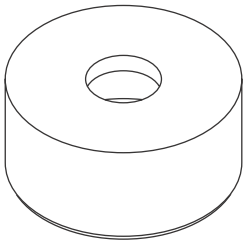 ST20299AG000	20299AG000	REMOVER	• Used for replacing front arm rear bushing. • Used together with BASE (20999AG010).
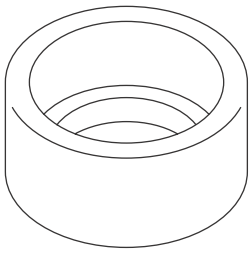 ST20299AG010	20299AG010	BASE	• Used for replacing front arm rear bushing. • Used together with REMOVER (20299AG000).
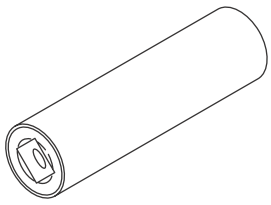 ST20299AG020	20299AG020	STUD BOLT SOCKET	Used for removing and installing the stud bolt for front arm installing portion.

ILLUSTRATION	TOOL NUMBER	DESCRIPTION	REMARKS
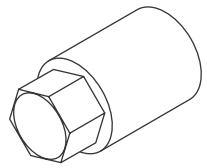 ST20399AG000	20399AG000	STRUT MOUNT SOCKET	Used for disassembling and assembling strut mount.

2. GENERAL TOOL

TOOL NAME	REMARKS
Alignment gauge	Used for measuring wheel alignment.
Alignment gauge adapter	Used for measuring wheel alignment.
Turning radius gauge	Used for measuring wheel alignment.
Toe-in gauge	Used for toe-in measurement.
Dial gauge	Used for damper strut measurement.
Coil spring compressor	Used for strut assembly/disassembly.
Chain sling	• Used for hanging power unit. • Diameter: 6 mm (0.24 in) or 6.3 mm (0.25 in) • Length: 0.8 — 1 m (2.6 — 3.3 ft) • Chain inner width: 8.5 mm (0.33 in) or more • Chain external width: 23.5 mm (0.93 in) or less • Load capacity: 1.2 t (2646 lb) or more
Shackle	• Two units used for hanging power unit. • Attached to both end of chain sling and connected to engine hook. • Load capacity: 250 kg (551 lb) or more
Sling belt	• Used to remove and install the cradle. • Width: 35 — 40 mm (1.38 — 1.57 in) • Length: 2 m (6.6 ft) • Load capacity: 1 t (2205 lb) or more
Shackle	• Used to remove and install the cradle. • Load capacity: 500 kg (1103 lb) or more

2. Wheel Alignment

A: INSPECTION

Check the following items before performing the wheel alignment measurement.

- Tire inflation pressure
- Uneven wear of RH and LH tires, or difference of sizes
- Tire runout
- Excessive play and wear of ball joint
- Excessive play and wear of tie-rod end
- Excessive play of wheel bearing
- Right and left wheel base imbalance
- Deformation and excessive play of steering link
- Deformation and excessive play of suspension parts

Check, adjust and measure the wheel alignment in accordance with the procedures indicated in the figure.

Wheel arch height (front and rear wheels) <Ref. to FS-9, WHEEL ARCH HEIGHT, INSPECTION, Wheel Alignment.>
↓
Camber (front and rear wheels) <Ref. to FS-10, CAMBER, INSPECTION, Wheel Alignment.>
↓
Caster (front wheel) <Ref. to FS-11, CASTER, INSPECTION, Wheel Alignment.>
↓
Steering angle <Ref. to FS-11, STEERING ANGLE, INSPECTION, Wheel Alignment.>
↓
Front wheel toe-in <Ref. to FS-12, FRONT WHEEL TOE-IN, INSPECTION, Wheel Alignment.>
↓
Rear wheel toe-in <Ref. to FS-12, REAR WHEEL TOE-IN, INSPECTION, Wheel Alignment.>
↓
Thrust angle <Ref. to FS-14, THRUST ANGLE, INSPECTION, Wheel Alignment.>

1. WHEEL ARCH HEIGHT

1) Park the vehicle on a level surface.
2) Empty the vehicle so that it is at “curb weight”. (Empty the luggage compartment, load the spare tire, jack and service tools, and fill up the fuel tank.)
3) Set the steering wheel in a straight-ahead position, and stabilize the suspension by moving the vehicle in a straight line for 5 m (16 ft) or more.
4) Suspend a thread from the wheel arch (point “A” in the figure below) and affix at a position directly above the center of wheel.
5) Measure the distance between the point “A” and the center of wheel.

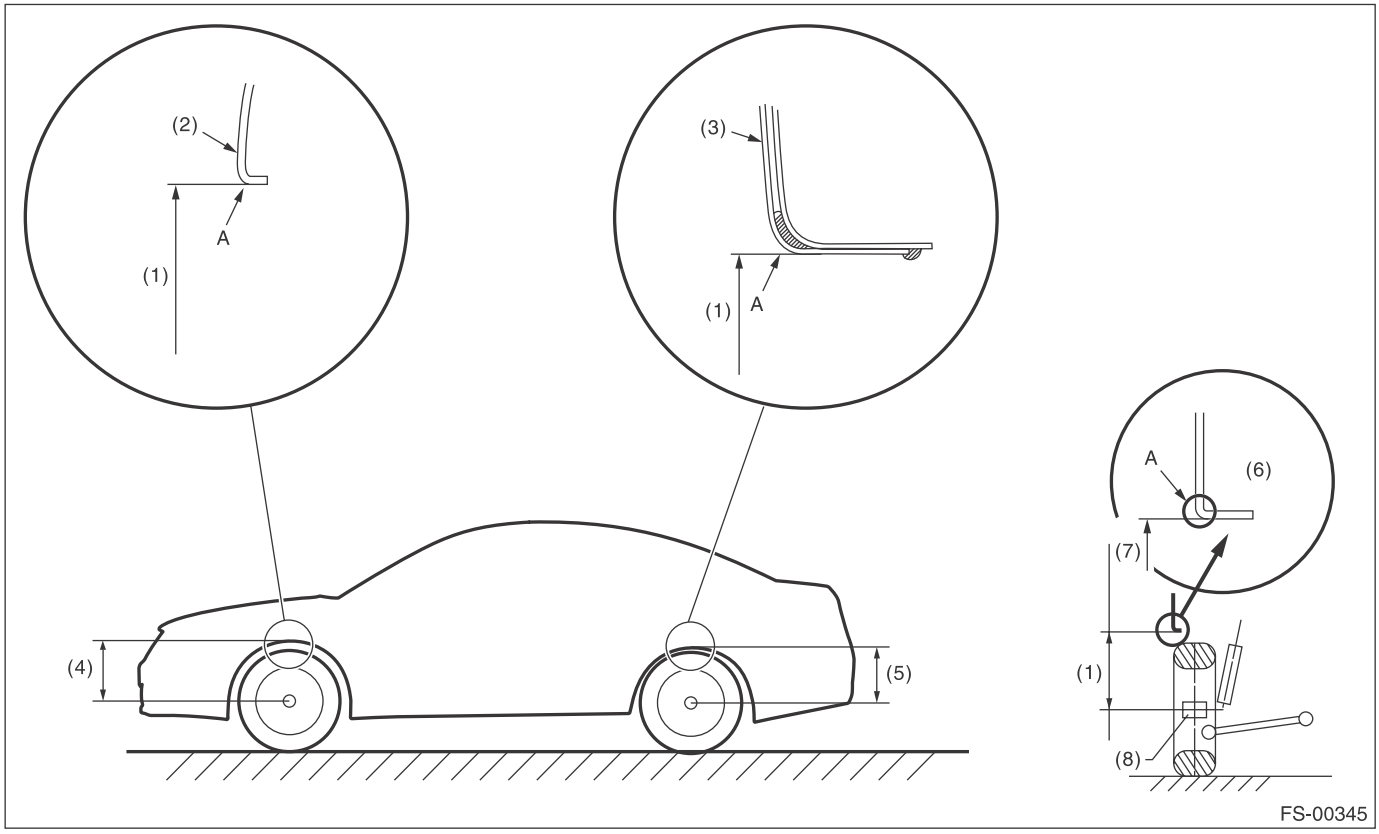

(1) Wheel arch height
(2) Front fender
(3) Rear quarter
(4) Front wheel arch height
(5) Rear wheel arch height
(6) Flange bend line
(7) Point of measurement
(8) End of spindle

Wheel arch height specification mm (in) (Tolerance: $^{+12\ mm}_{-24\ mm}$ ($^{+0.47\ in}_{-0.94\ in}$))			
Tire size	P205/60R16 P215/50R17	P225/50R17 225/45R18	P225/60R17 P215/70R16
Front	403 (15.9)	395 (15.6)	469 (18.5)
REAR	392 (15.4)	387 (15.2)	474 (18.7)

2. CAMBER

• INSPECTION

1) Place the front wheel on the turning radius gauge. Make sure the ground contact surfaces of the front and rear wheels are at the same height.
2) Set the adapter into the center of wheel, and then set the wheel alignment gauge.

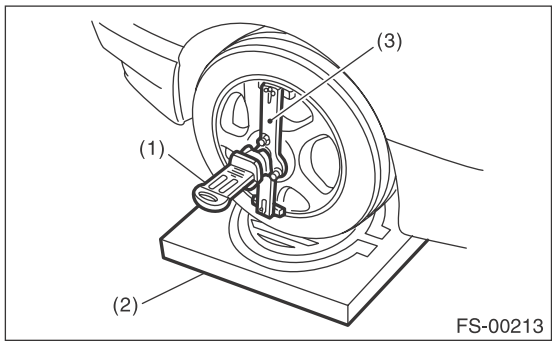

(1) Alignment gauge
(2) Turning radius gauge
(3) Adapter

3) Measure the camber angle in accordance with the operation manual for wheel alignment gauge.

Model	Camber (Difference between RH and LH 45′ or less)
P205/60R16 P215/50R17	–0°30′±0°45′
P225/50R17 225/45R18	–0°15′±0°45′
P225/60R17 P215/70R16	0°00′±0°45′

• FRONT CAMBER ADJUSTMENT

1) When adjusting the camber, adjust it to the following value.

Model	Camber (Difference between RH and LH 45′ or less)
P205/60R16 P215/50R17	–0°30′±0°30′
P225/50R17 225/45R18	–0°15′±0°30′
P225/60R17 P215/70R16	0°00′±0°30′

2) Loosen the two self-locking nuts located at the front lower section of the strut.

NOTE:
When the adjusting bolt needs to be loosened or tightened, hold its head with a wrench and turn the self-locking nut.
3) Turn the camber adjusting bolt so that the camber is set at specification.

NOTE:
Moving the adjusting bolt by one scale changes the camber by approximately 0°15′.

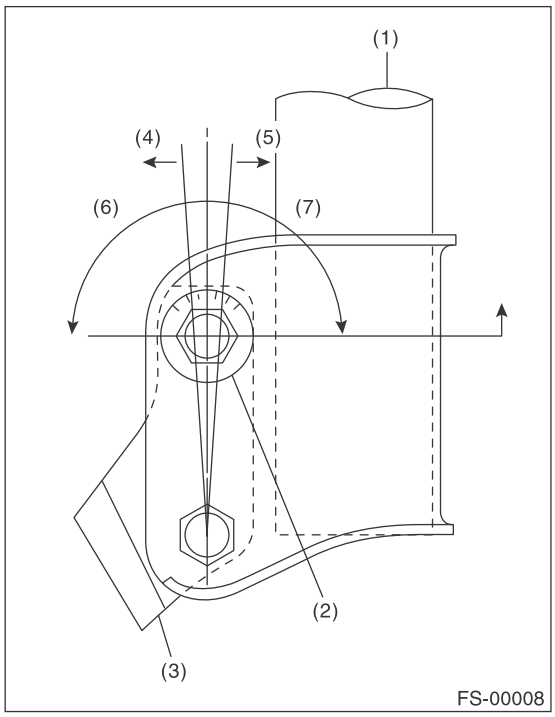

(1) STRUT
(2) Adjusting bolt
(3) Housing
(4) Outer
(5) Inner
(6) Camber is increased.
(7) Camber is decreased.

To increase camber.	
Rotate the left side counterclockwise.	Rotate the right side clockwise.
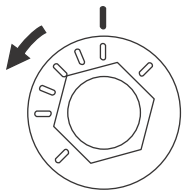 FS-00352	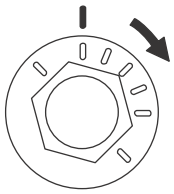 FS-00353

To decrease camber.	
Rotate the left side clockwise.	Rotate the right side counterclockwise.
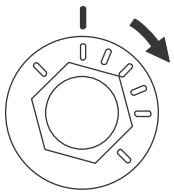 FS-00353	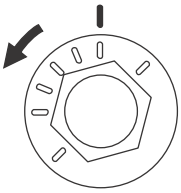 FS-00352

4) Tighten two new self-locking nuts.

Tightening torque:
155 N·m (15.8 kgf-m, 114.3 ft-lb)

3. CASTER

• INSPECTION

1) Place the front wheel on the turning radius gauge. Make sure the ground contact surfaces of the front and rear wheels are at the same height.
2) Set the adapter into the center of wheel, and then set the wheel alignment gauge.

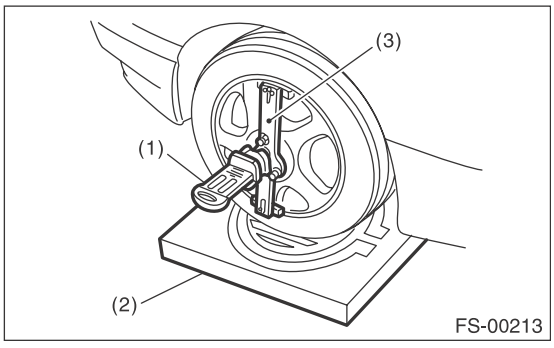

(1) Alignment gauge
(2) Turning radius gauge
(3) Adapter

3) Measure the caster angle in accordance with the operation manual for wheel alignment gauge.

Model	Caster
P205/60R16 P215/50R17	5°55′
P225/50R17 225/45R18	6°00′
P225/60R17 P215/70R16	5°05′

4. STEERING ANGLE

• INSPECTION

1) Place the vehicle on turning radius gauge.
2) While depressing the brake pedal, turn the steering wheel fully to the left and right. With the steering wheel held at each fully turned position, measure both the inner and outer wheel steering angles.

Model	Inner wheel	Outer wheel
P205/60R16 P215/50R17	37.6°±1.5°	33.3°±1.5°
P225/50R17 225/45R18	37.4°±1.5°	33.0°±1.5°
P225/60R17 P215/70R16	38.4°±1.5°	34.1°±1.5°

• **ADJUSTMENT**

1) Turn the tie-rod to adjust the steering angle of both inner and outer wheels.
2) Check the toe-in.

NOTE:
Correct the boot if it is twisted.

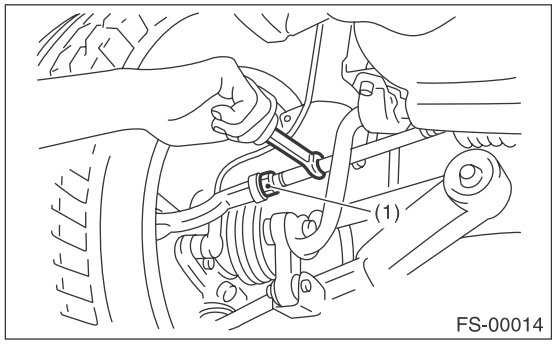

(1) Lock nut

5. FRONT WHEEL TOE-IN

• **INSPECTION**

Toe-in:
0±3 mm (0±0.12 in)

1) Set the toe-in gauge in the position at wheel axis center height behind the right and left front tires.
2) Place a mark at the center of both left and right tires, and measure distance “A” between the marks.
3) Move the vehicle forward to rotate the tires 180°.

NOTE:
Be sure to rotate the tires in the forward direction.

4) Measure the distance “B” between the left and right marks. Find toe-in using the following calculation:

A – B = Toe-in

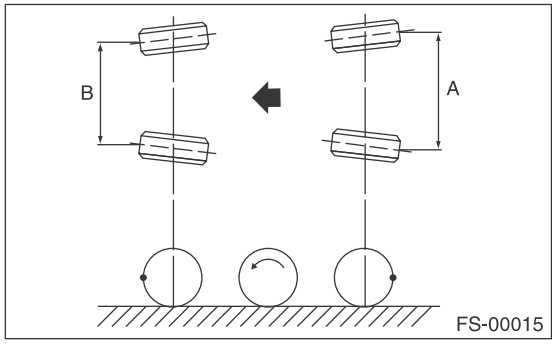

• **ADJUSTMENT**

When adjusting the toe-in, adjust it to the following value.

Toe-in:
0±2 mm (0±0.08 in)

1) Check that the left and right wheel steering angles are within specification.
2) Loosen the left and right side steering tie-rod lock nuts.
3) Turn the left and right tie-rods by equal amounts until the toe-in is at the specification.

Both the left and right tie-rods are right-hand threaded. To increase toe-in, turn both tie-rods clockwise by equal amount (viewing from the inside of vehicle).

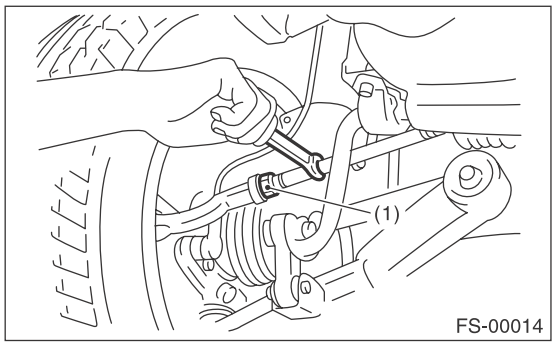

(1) Lock nut

4) Tighten the tie-rod lock nut.

Tightening torque:
85 N·m (8.7 kgf-m, 62.7 ft-lb)

NOTE:
Check and correct the tie-rod boot if twisted.

6. REAR WHEEL TOE-IN

• **INSPECTION**

Toe-in:
Except for OUTBACK model
0±3 mm (0±0.12 in)
OUTBACK model
2±3 mm (0.08±0.12 in)

Refer to FRONT WHEEL TOE-IN for rear toe-in inspection procedures.
<Ref. to FS-12, FRONT WHEEL TOE-IN, INSPECTION, Wheel Alignment.>

• **ADJUSTMENT**

When adjusting, adjust it to the following value.

Toe-in:
Except for OUTBACK model
0±2 mm (0±0.08 in)
OUTBACK model
2±2 mm (0.08±0.08 in)

1) Loosen the self-locking nut on the inner side of front lateral link.

NOTE:
When loosening or tightening the adjusting bolt, hold the bolt head and turn the self-locking nut.

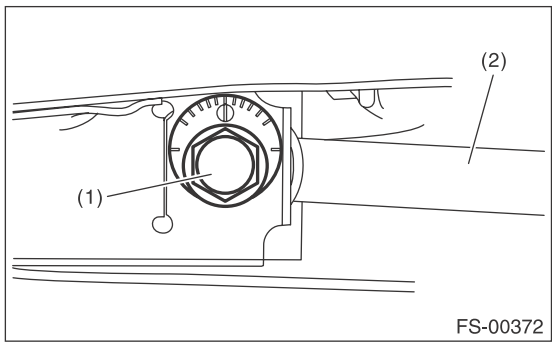

(1) Adjusting bolt
(2) Lateral link

2) Turn the adjusting bolt until toe-in is within the specification.

NOTE:
When the left and right wheels are adjusted for toe-in at the same time, the movement of one scale graduation changes toe-in by approx. 1.3 mm (0.05 in).

To increase toe-in.	
Rotate the left side clockwise.	Rotate the right side counterclockwise.
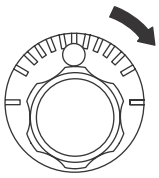 FS-00018	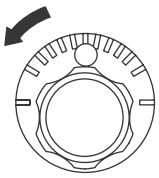 FS-00019

To decrease toe-in.	
Rotate the left side counterclockwise.	Rotate the right side clockwise.
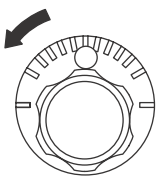 FS-00019	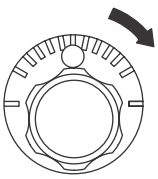 FS-00018

3) Attach and tighten a new self-locking nut.

Tightening torque:
120 N·m (12.2 kgf-m, 88.5 ft-lb)

7. THRUST ANGLE

• INSPECTION

1) Park the vehicle on a level surface.
2) Move the vehicle 3 to 4 meters (10 to 13 feet) straight forward.
3) Draw the center of loci for both the front and rear axles.
4) Measure distance "L" between the center lines of the axle loci.

Thrust angle:
0°±30′
Less than 30′ when "L" is 23 mm (0.9 in) or less

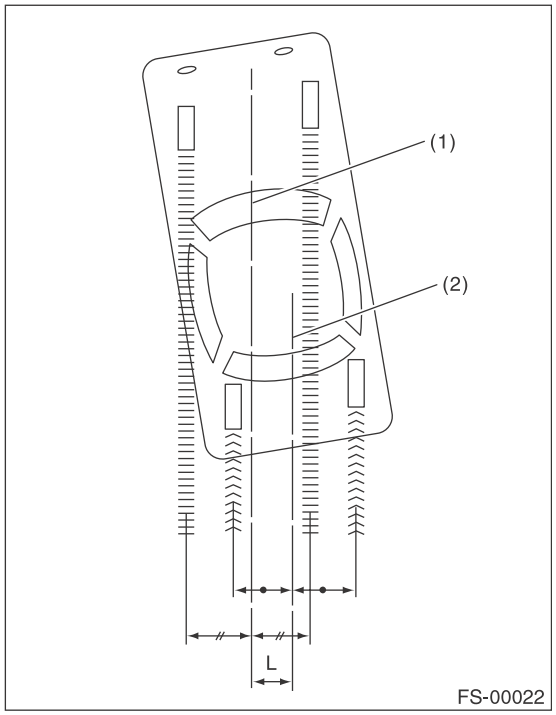

(1) Center line of loci (front axle)
(2) Center line of loci (rear axle)

• ADJUSTMENT

When adjusting, adjust it to the following value.

Thrust angle:
0°±20′
Less than 20′ when "L" is 15 mm (0.6 in) or less

1) Make thrust angle adjustments by turning the toe-in adjusting bolts of the rear suspension equally in the same direction.
2) When one rear wheel is adjusted in a toe-in direction, adjust the other rear wheel equally in toe-out direction, in order to make the thrust angle adjustment.
3) When the left and right adjusting bolts are turned by one graduation, the thrust angle will change approx. 15′ ("L" is approx. 11 mm (0.43 in)).

NOTE:
Thrust angle is a mean value of left and right wheel toe angles in relation to the vehicle body center line. Vehicle is driven straight in the thrust angle direction while slanting in the oblique direction depending on the degree of the mean thrust angle.

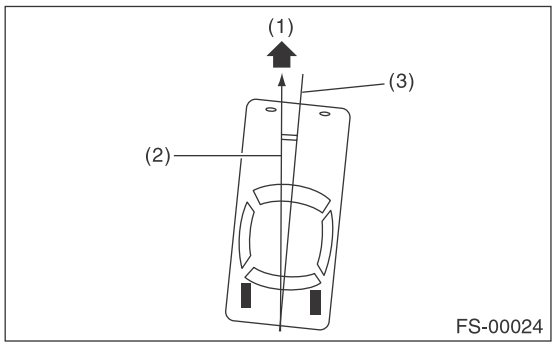

(1) Front
(2) Thrust angle
(3) Body center line

Thrust angle: $\gamma = (\alpha - \beta)/2$
α: Rear RH wheel toe-in angle
β: Rear LH wheel toe-in angle
Substitute only the positive toe-in values from each wheel into α and β in the calculation.

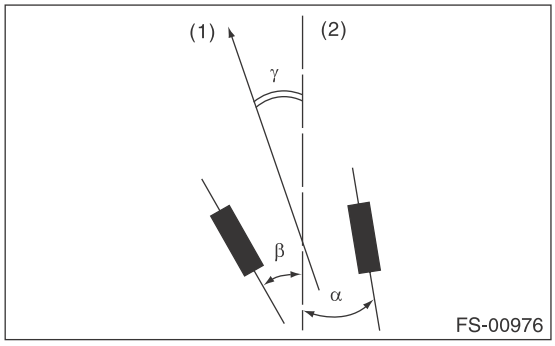

(1) Front
(2) Body center line

3. Cradle

A: REMOVAL

1) Set the vehicle on a lift.
2) Position the tilt position of the steering column to the lowest position, and lock the tilt lever.
3) Prevent the steering wheel from turning using the seat belt.

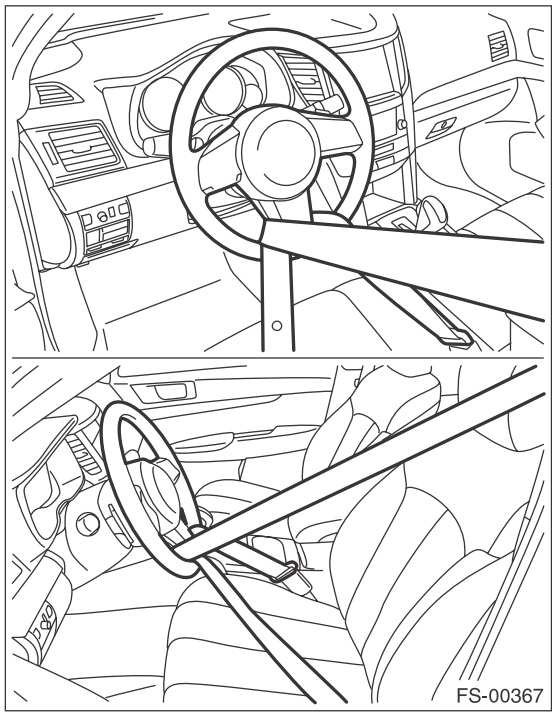

4) Remove the front wheels.
5) Disconnect the ground cable from battery.
6) Remove the air intake duct. <Ref. to IN(H4SO)-9, REMOVAL, Air Intake Duct.>
7) Remove the air intake boot assembly. (non-turbo model) <Ref. to IN(H4SO)-8, REMOVAL, Air Intake Boot.> <Ref. to IN(H6DO)-7, REMOVAL, Air Intake Boot.>
8) Remove the intercooler and the intercooler stay. (turbo model) <Ref. to IN(H4DOTC)-17, REMOVAL, Intercooler.>
9) Remove the clips and remove the grille bracket.

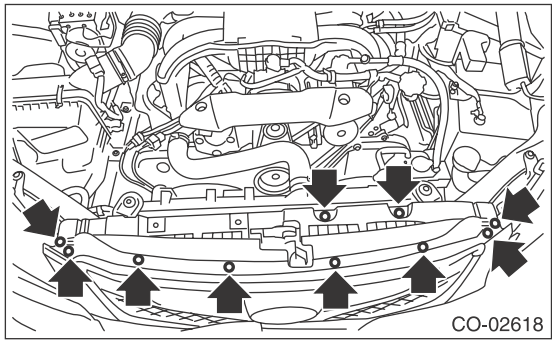

10) Remove the power steering hose bracket and power steering hose.
(1) Remove the clip and disconnect the hose from the pipe.
(2) Remove the power steering hose bracket.

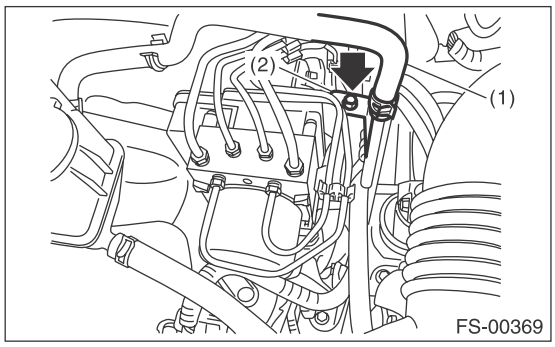

(1) Power steering hose
(2) Power steering hose bracket

(3) Remove the hose from the power steering pump.

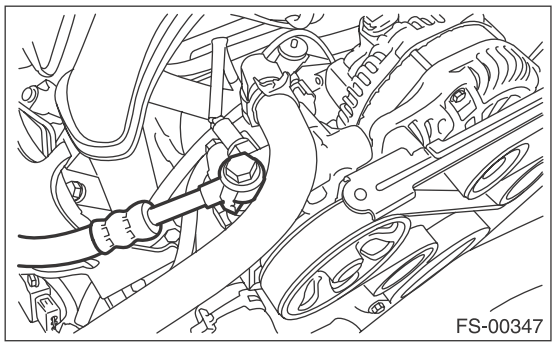

NOTE:
Plug the holes to prevent foreign objects from entering the removed hose and pipe.
11) Remove the throttle body from the intake manifold.

NOTE:
Do not disconnect the inlet and outlet hoses of engine coolant.
12) Replace the engine hanger installed on the engine with the SUBARU genuine engine hanger (H4 - non-turbo model) or ST (H6 model).

Tightening torque:
16 N·m (1.6 kgf-m, 11.8 ft-lb)

• H4 non-turbo model
SUBARU genuine part
10004AA180 HANGER CP ENGINE RR

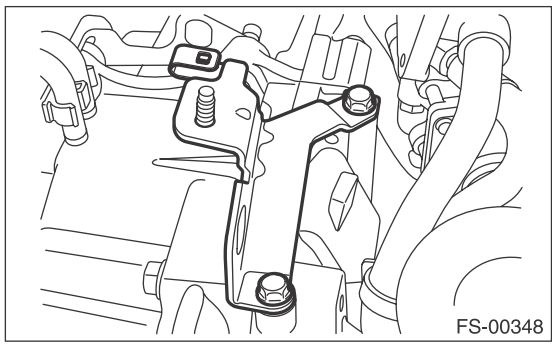

• H6 model
ST 18360AA020 HANGER

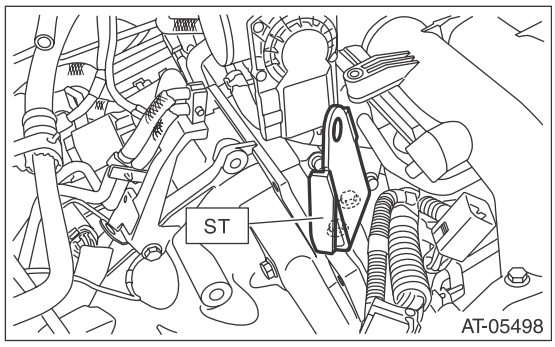

13) Hang the engine using ST, chain sling and shackle.
(1) Set the ST on the vehicle.
ST1 99099AJ000 ENGINE HANGER
ST2 99099AJ010 CHAIN BALANCER

CAUTION:
Set the arms of ST (ENGINE HANGER) at the locations shown in the figure.

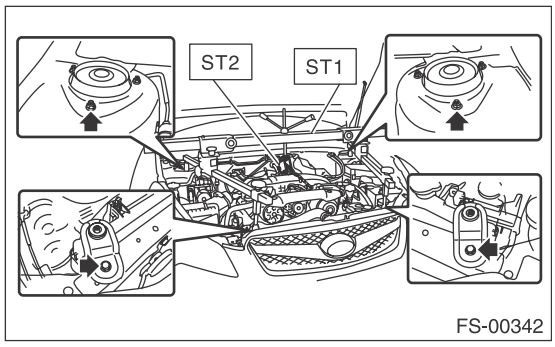

(2) Attach the shackle to the both ends of chain sling.
(3) Pass the chain sling through the CHAIN BALANCER and secure the both ends to the hooks on the engine.

CAUTION:
• Set the chain sling so that it does not contact the engine parts.

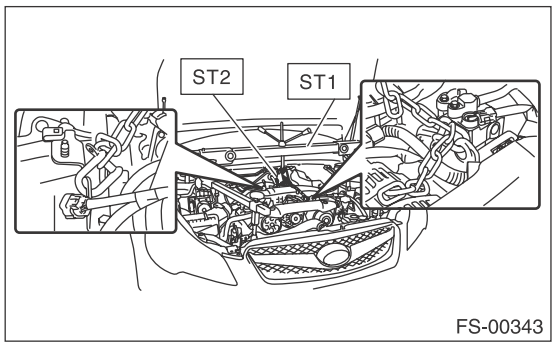

• Use a chain sling with the diameter of 6 mm (0.24 in) or 6.3 mm (0.25 in), the length of 0.8 — 1 m (2.6 — 3.3 ft), the chain inner width of 8.5 mm (0.33 in) or more, the chain outer width of 23.5 mm (0.93 in) or less and the load capacity of 1.2 t (2646 lb) or more.

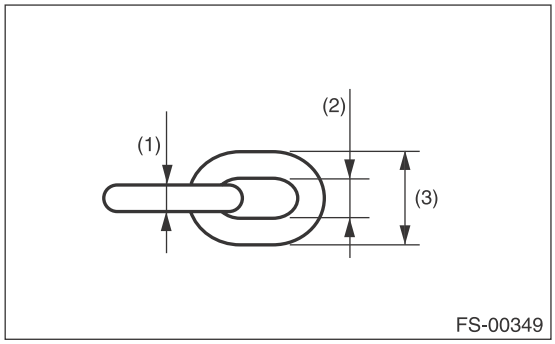

(1) Wire diameter
(2) Inner width
(3) Outer width

• Use a shackle with the load capacity of 250 kg (551 lb) or more.

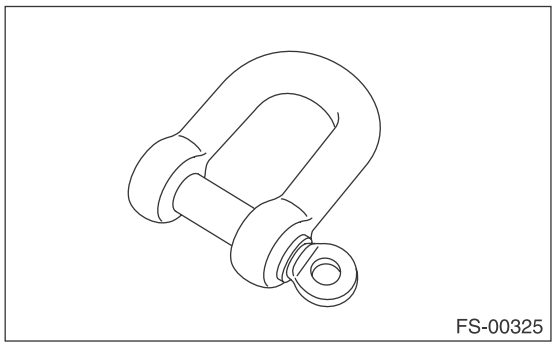

14) Remove the nuts connecting the main mount and the transmission mounting bracket.

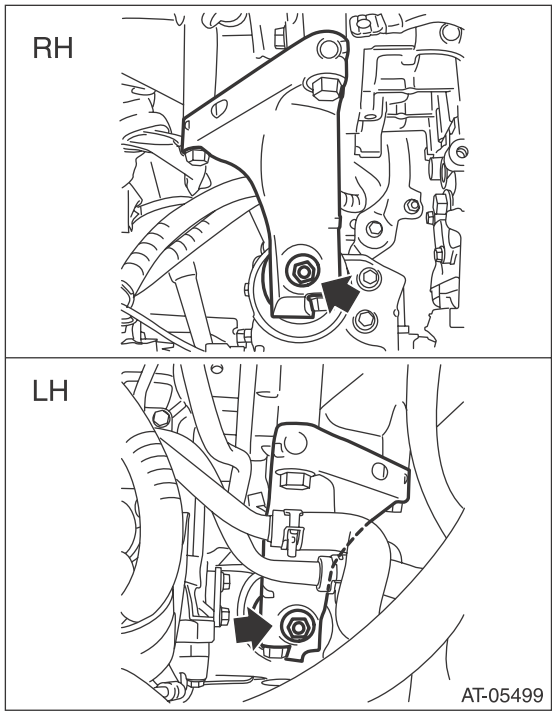

15) Remove the universal joint. <Ref. to PS-18, REMOVAL, Universal Joint.>
16) Remove the front exhaust pipe.
17) Disconnect the front arm.

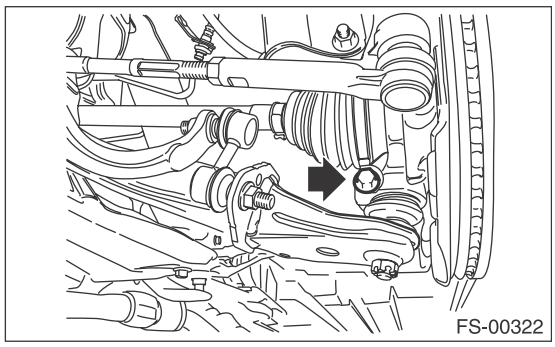

18) Disconnect the tie-rod end.

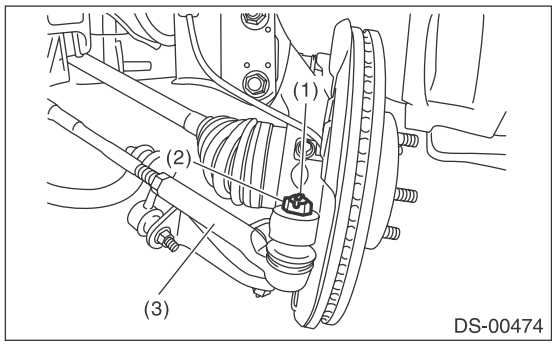

(1) Cotter pin
(2) Castle nut
(3) Tie-rod end

19) Attach the sling belt so that it wraps around the both frames using the shackle.

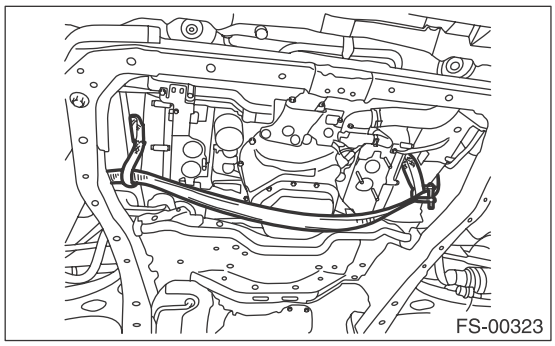

CAUTION:
• Be sure to attach the sling belt to ensure safety in operation.
• Use a sling belt with the length of 2 m (6.6 ft), the width of 35 — 40 mm (1.38 — 1.57 in) and the load capacity of 1 t (2205 lb) or more.

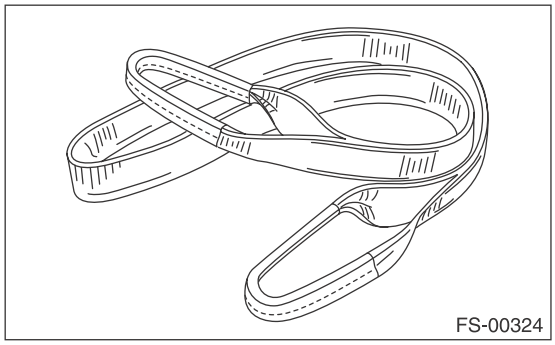

• Use a shackle with the load capacity of 0.5 t (1103 lb) or more.

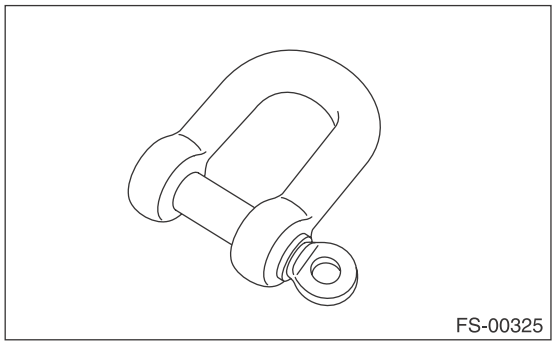

20) Remove the bolt on the front cushion rubber.

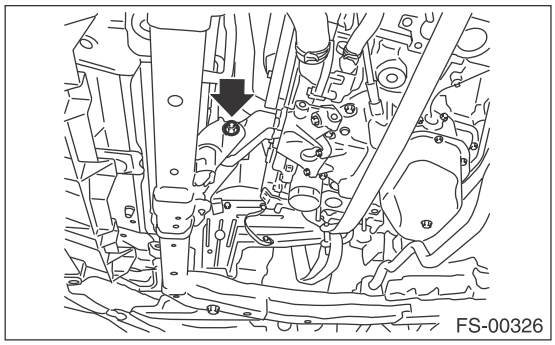

21) Support the cradle with a transmission jack and remove the bolts and nuts.

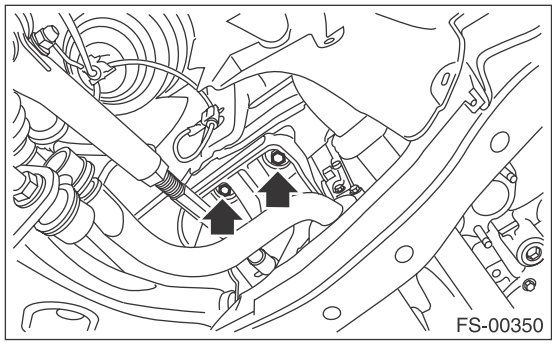



22) Remove the cradle from the vehicle.

CAUTION:
The cradle is heavy. Remove it carefully by paying attention to the balance.

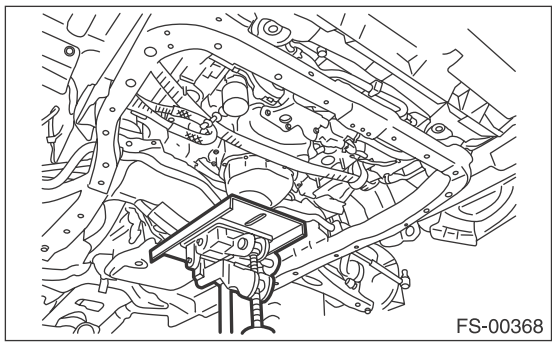

23) To remove the stud bolt, use the ST.
ST 20299AG020 STUD BOLT SOCKET

CAUTION:
Do not remove the stud bolt unnecessarily. Always replace the parts with new parts when removed.

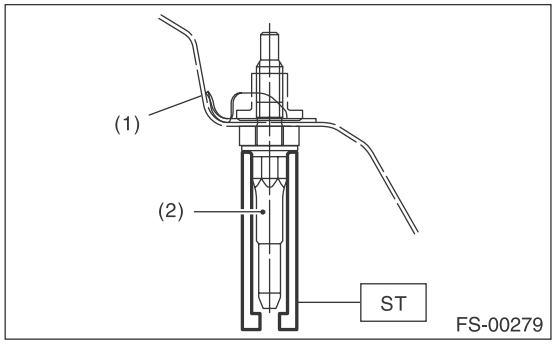

(1) Vehicle body
(2) Stud bolt

B: INSTALLATION

1) Install in the reverse order of removal.

NOTE:
Replace the gasket of the throttle body with a new gasket.

CAUTION:
• Use a new bolt and self-locking nut. For parts which are not reusable, refer to "COMPONENT".
<Ref. to FS-3, COMPONENT, General Description.>
• Perform installation of the universal joint when the tilt position of the steering column is at the lowest position.
• Tighten the bolts of the universal joint in the order of gearbox side and column shaft side.

Tightening torque:
<Ref. to FS-3, COMPONENT, General Description.>
<Ref. to PS-4, COMPONENT, General Description.>

2) Inspect the wheel alignment and adjust if necessary.

4. Front Stabilizer

A: REMOVAL

1) Lift up the vehicle, and then remove the front wheels.
2) Remove the front under cover. <Ref. to EI-35, REMOVAL, Front Under Cover.>
3) Remove the exhaust center pipe. (turbo model) <Ref. to EX(H4DOTC)-12, REMOVAL, Center Exhaust Pipe.>
4) Remove the stabilizer link.

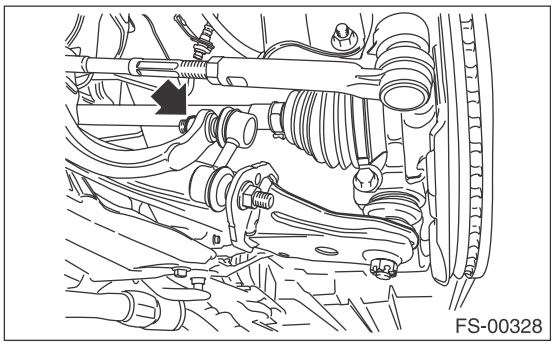

5) Remove the stabilizer bracket.

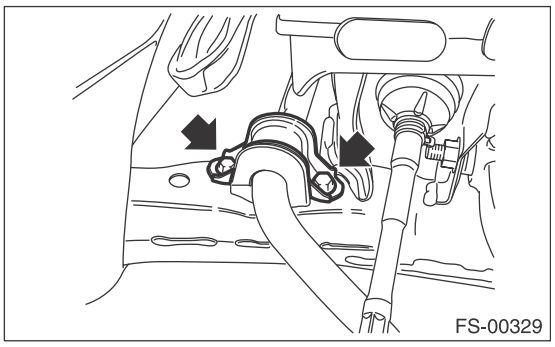

6) Disconnect the tie-rod end.

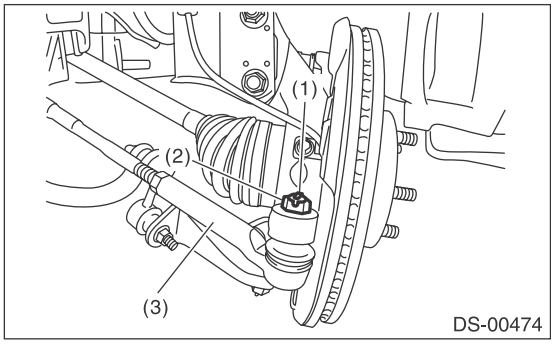

(1) Cotter pin
(2) Castle nut
(3) Tie-rod end

7) Hang the engine and replace the front cushion mount with ST. (turbo model) <Ref. to 5AT-38, REMOVAL, Automatic Transmission Assembly.>
ST 41099AJ000 SPECIAL TOOL H4

NOTE:
For turbo model, it is required to secure space for operation to hang the engine and remove the stabilizer.
8) Turn the front stabilizer by approximately 180° toward the front of the vehicle and pull out the front stabilizer from the right side of the vehicle.

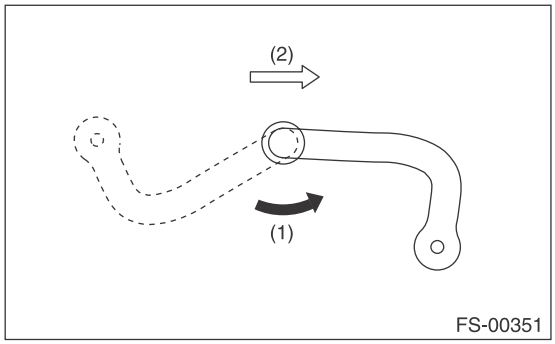

(1) Turn toward the front of the vehicle.
(2) Front side of vehicle

B: INSTALLATION

Install in the reverse order of removal.

CAUTION:
The stabilizer bracket has a set orientation. Install it with the arrow mark facing the upper side of the vehicle.

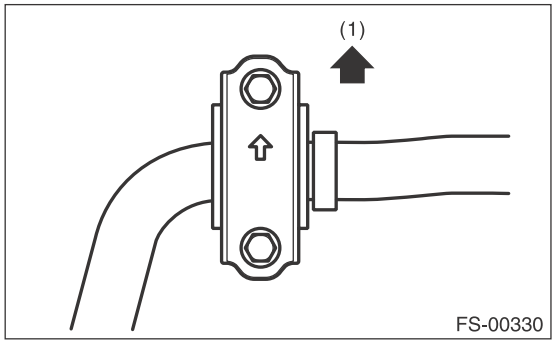

(1) Front side of vehicle

Tightening torque:
Stabilizer bracket:
25 N·m (2.5 kgf-m, 18.4 ft-lb)
Stabilizer link:
60 N·m (6.1 kgf-m, 44.3 ft-lb)

5. Front Ball Joint

A: REMOVAL

1) Lift up the vehicle, and remove the front wheels.
2) Remove the both sides of stabilizer bracket.

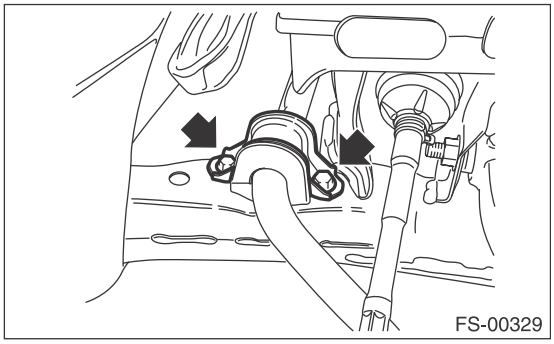

3) Pull out the cotter pin from ball stud, remove the castle nut, and extract the ball stud from front arm.
4) Remove the bolt installing ball joint to housing.

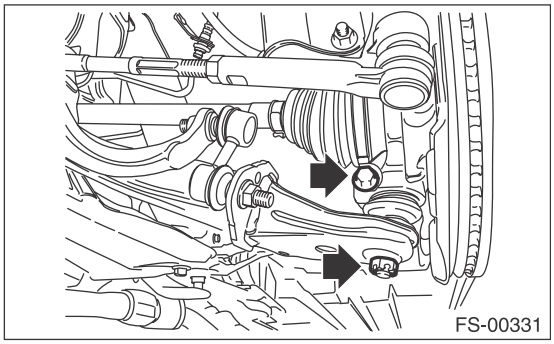

5) Extract the ball joint from housing.

B: INSTALLATION

1) Install the ball joint into housing.

Tightening torque:
50 N·m (5.1 kgf-m, 36.9 ft-lb)

CAUTION:
• Do not apply grease to the tapered portion of ball stud.
• Before tightening, make sure the lower side of housing and stepped section of ball joint are in contact.

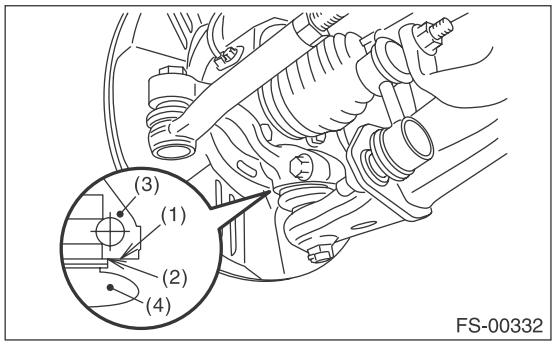

(1) Housing bottom
(2) Raised section of ball joint
(3) Housing
(4) Ball joint

2) Install the ball joint into front arm.

Tightening torque:
39 N·m (4.0 kgf-m, 28.8 ft-lb)

3) Retighten the castle nut further up to 60° until the hole in the ball stud is aligned with a slot in castle nut. Then, insert a new cotter pin and bend it around the castle nut.
4) Install the stabilizer bracket.

NOTE:
The stabilizer bracket has a set orientation. Install it with the arrow mark facing the upper side of the vehicle.

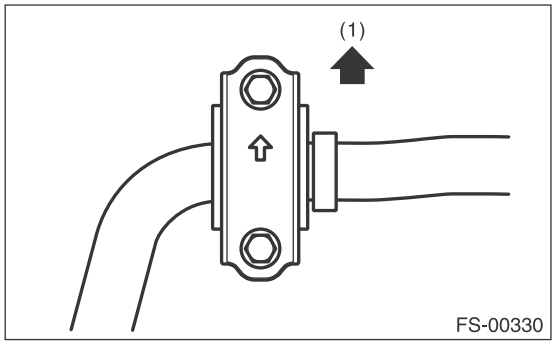

(1) Front side of vehicle

Tightening torque:
25 N·m (2.5 kgf-m, 18.4 ft-lb)

5) Install the front wheels.

C: INSPECTION

1) Measure the play of the ball joint using the following procedures. Replace with a new part if the play exceeds specification.

(1) With 686 N (70 kgf, 154 lbf) loaded in direction shown in the figure, measure the length ℓ_1.

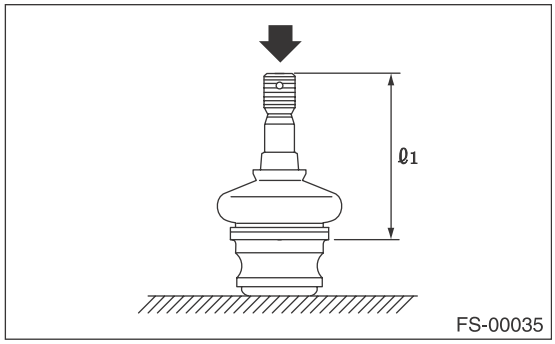

(2) With 686 N (70 kgf, 154 lbf) loaded in direction shown in the figure, measure the length ℓ_2.

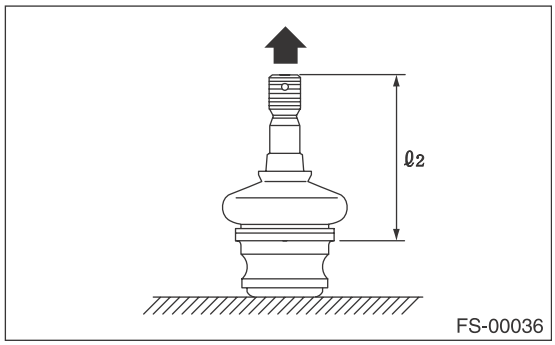

(3) Determine free play using the following formula.

$S = \ell_2 - \ell_1$

(4) Replace with a new part if the play exceeds specification.

Front ball joint

Specification for replacement S:

Less than 0.3 mm (0.012 in)

2) If the play is within specification, visually check the dust cover.

3) If the dust cover is damaged, replace with a new ball joint.

6. Front Arm

A: REMOVAL

1) Lift up the vehicle, and then remove the front wheels.
2) Remove the front stabilizer link.
3) Remove the ball joint of front arm.

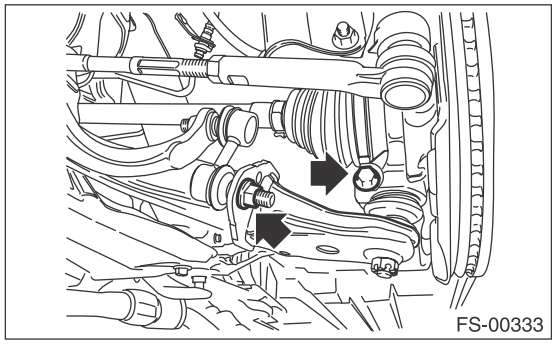

4) Remove the bolts, then remove the front arm.



B: INSTALLATION

1) Using new self-locking nuts, temporary tighten the front arm.
2) Install the ball joint into housing.

CAUTION:
Before tightening, make sure the lower side of housing and stepped section of ball joint are in contact.

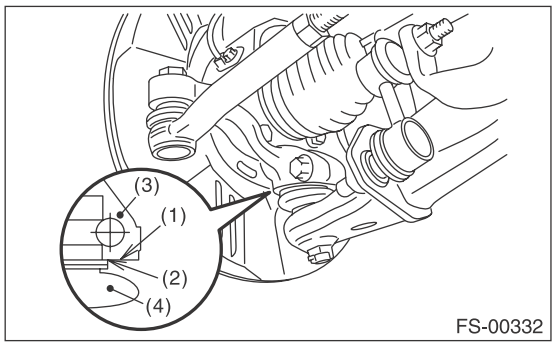

(1) Housing bottom
(2) Raised section of ball joint
(3) Housing
(4) Ball joint

Tightening torque:
50 N·m (5.1 kgf-m, 36.9 ft-lb)
3) Install the stabilizer link.

Tightening torque:
60 N·m (6.1 kgf-m, 44.3 ft-lb)
4) Install the front wheels.
5) Unload the vehicle from lift, and tighten the bolt which secures the front arm to cradle with wheels in full contact with the ground and the vehicle at curb weight.

Tightening torque:
Front bushing side
95 N·m (9.7 kgf-m, 70.1 ft-lb)
Rear bushing side
140 N·m (14.3 kgf-m, 103.3 ft-lb)
6) Inspect the wheel alignment and adjust if necessary.

C: DISASSEMBLY

1. FRONT BUSHING

Using the ST and a press, remove the front bushing.

ST 927680000 INSTALLER & REMOVER SET

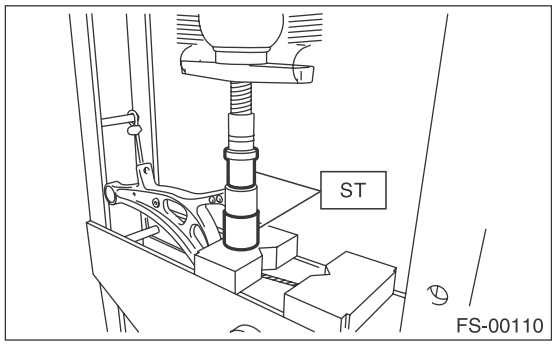

2. REAR BUSHING

1) Put an alignment mark on the front arm based on the center of rear bushing recess portion.

CAUTION:
Always put an alignment mark for aligning the position on bushing installation.

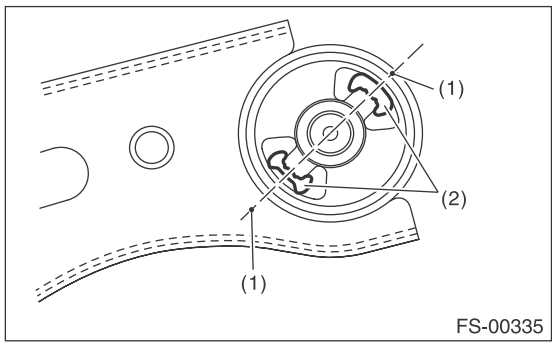

(1) Put an alignment mark.
(2) Recess section

2) Using the ST and a press, remove the rear bushing.

ST1 20299AG000 REMOVER
ST2 20299AG010 BASE

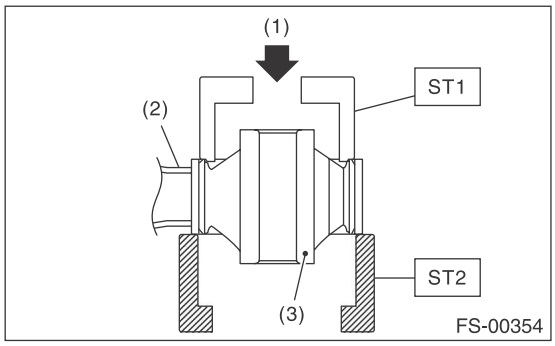

(1) PRESS
(2) Front arm
(3) Rear bushing

D: ASSEMBLY

1. FRONT BUSHING

Assemble in the reverse order of disassembly.

2. REAR BUSHING

1) Align the center of recess portion with the alignment mark on the front arm, with the protrusion (A) of recess portion facing the front side of vehicle.

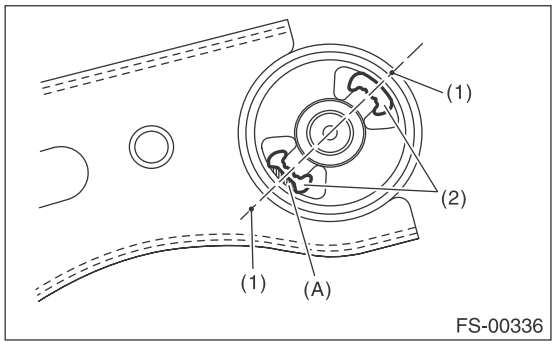

(1) Alignment mark
(2) Recess section

2) Using the ST and a press, install the rear bushing.
ST1 20299AG000 REMOVER
ST2 20299AG010 BASE

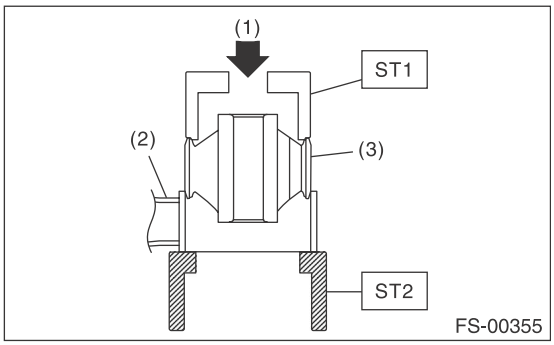

(1) PRESS
(2) Front arm
(3) Rear bushing

E: INSPECTION

1) Check the front arm for damage or cracks, and replace if defective.
2) Check the bushing for abnormal fatigue or damage.

7. Front Strut

A: REMOVAL

1) Lift up the vehicle, and then remove the front wheels.
2) Place an alignment mark on the camber adjusting bolt and strut.
3) Remove the brake hose bracket.

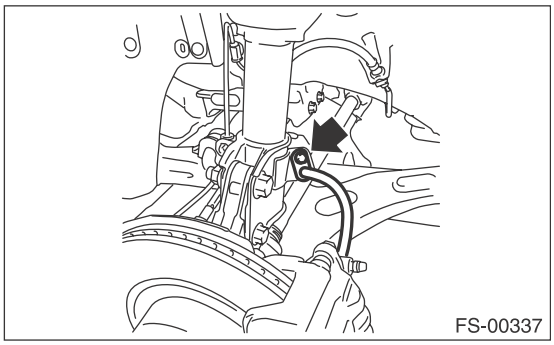

4) Remove the ABS wheel speed sensor harness.

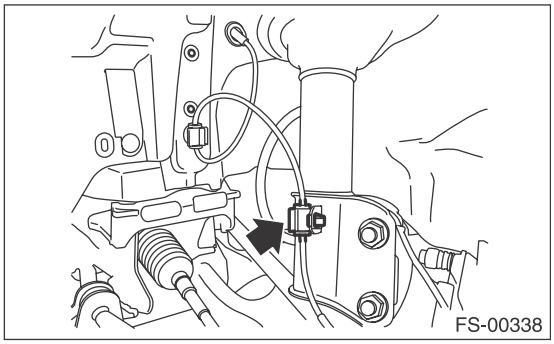

5) Remove the two bolts securing the housing to the strut.

NOTE:
While holding the head of the adjusting bolt, loosen the self-locking nut.

6) Remove the three nuts securing strut mount to body.

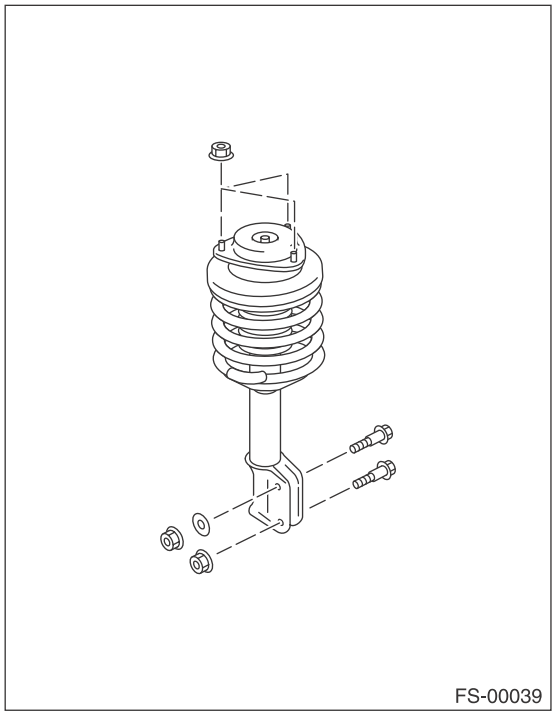

B: INSTALLATION

1) Install the strut mount at the upper side of strut to body, and tighten it with new self-locking nuts.

Tightening torque:
20 N·m (2.0 kgf-m, 14.8 ft-lb)

2) Align alignment marks on the camber adjusting bolt and strut.
Using new self-locking nuts, install the strut to the housing.

NOTE:
While holding the head of adjusting bolt, tighten the self-locking nut.

Tightening torque:
155 N·m (15.8 kgf-m, 114.3 ft-lb)

3) Secure the ABS wheel speed sensor harness bracket to the strut.
4) Install the brake hose bracket.

Tightening torque:
33 N·m (3.4 kgf-m, 24.3 ft-lb)

5) Install the front wheels.
6) Inspect the wheel alignment and adjust if necessary.

C: DISASSEMBLY

1) Using a coil spring compressor, compress the coil spring.

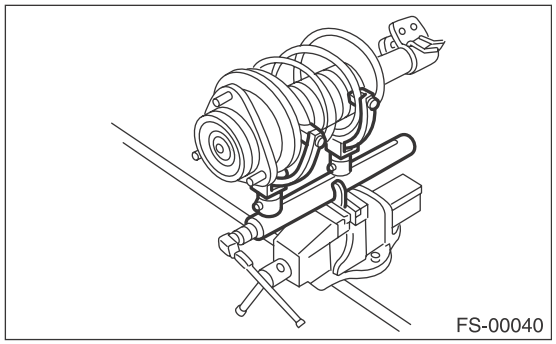

2) Using the ST, remove the self-locking nut.
ST 20399AG000 STRUT MOUNT SOCKET

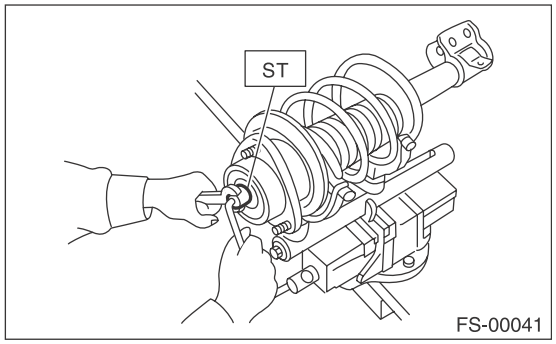

3) Remove the strut mount, spacer and upper spring seat from the strut.
4) Gradually decrease the compression force of compressor, and remove the coil spring.
5) Remove the dust cover and helper.

D: ASSEMBLY

1) Using a coil spring compressor, compress the coil spring.

NOTE:
Make sure that the vertical install direction of the coil spring is as shown in the figure.

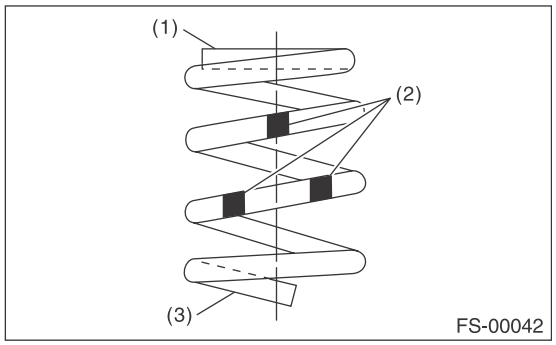

(1) Diameter is small (Upper part)
(2) Identification paint
(3) Diameter is large (Bottom part)

2) Set the coil spring correctly so that its end face seats well in the spring seat as shown in the figure.

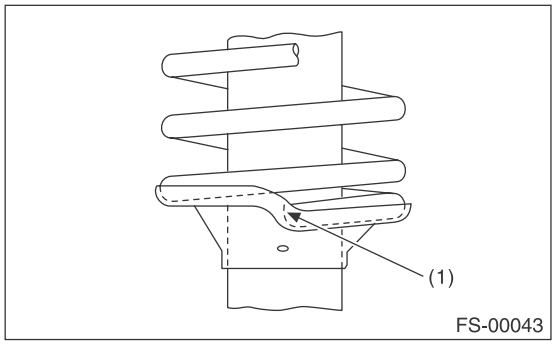

(1) Coil spring end face

3) Install the dust cover and helper to the piston rod.
4) Pull the piston rod fully upward, and install the spring seat.

NOTE:
Position the upper spring seat as shown in the figure.

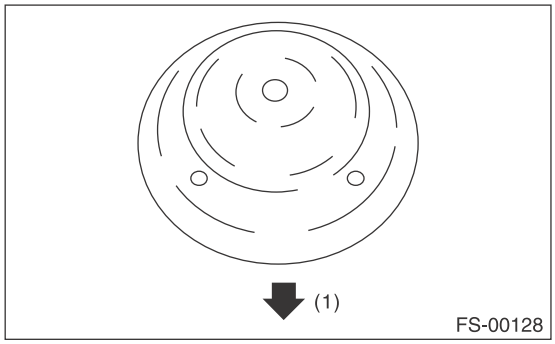

(1) Outside of body

5) Install the spacer and strut mount to the piston rod, and temporarily tighten a new self-locking nut.
6) Using a hexagon wrench to prevent strut rod from turning, tighten the new self-locking nut with ST.
ST 20399AG000 STRUT MOUNT SOCKET

Tightening torque:
55 N·m (5.6 kgf-m, 40.6 ft-lb)

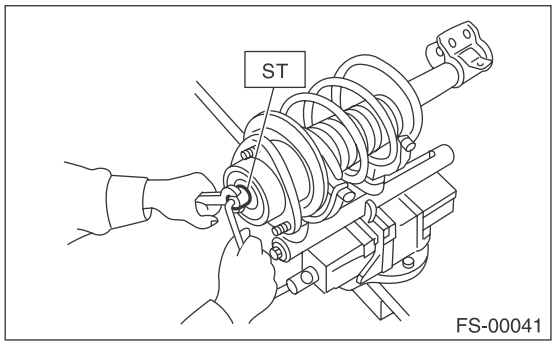

7) Loosen the coil spring compressor carefully.

E: INSPECTION

Check the removed part for wear, damage and cracks, and then repair or replace it if defective.

1. STRUT

1) Check for oil leaks.
2) Move the piston rod up and down to check that it operates smoothly without any hitch.
3) Piston rod play
• Measure the play as follows:
Fix the outer shell in place and fully extend the rod. Set a dial gauge at the end of rod L [10 mm (0.39 in)], and then read the dial gauge indication P_1 while applying a force of W [20 N (2 kgf, 4 lbf)] to the threaded portion. Apply a force of 20 N (2 kgf, 4 lbf) from the opposite direction of "W", and then read the dial gauge indication P_2.

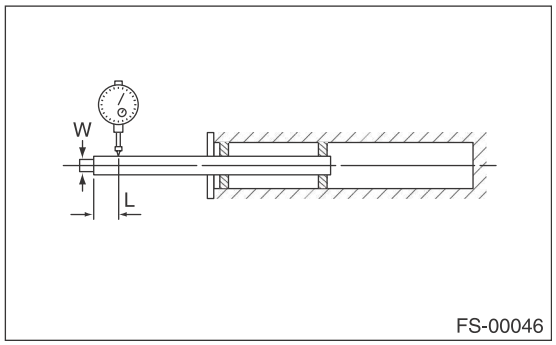

Play limit (P_1 + P_2):
0.8 mm (0.031 in)
If the play exceeds limit, replace the strut.

2. STRUT MOUNT

Check the rubber part for deformation, abnormal cracks or deterioration, and then replace it with a new part if defective.

3. DUST COVER

If abnormal cracks or damage are found, replace it with a new part.

4. COIL SPRING

If a permanent strain is found, replaced it with a new part.

5. HELPER

If abnormal cracks or damage are found, replace it with a new part.

F: DISPOSAL

CAUTION:
• Before handling struts, be sure to wear goggles to protect eyes from gas, oil and cutting powder.
• Do not disassemble the strut damper or throw into flames.
• When discarding gas filled struts, drill holes in them to purge the gas.
1) Place the strut on a level surface with the piston rod fully expanded.
2) Using a 2 — 3 mm (0.08 — 0.12 in) dia. drill, make holes in areas shown in the figure.

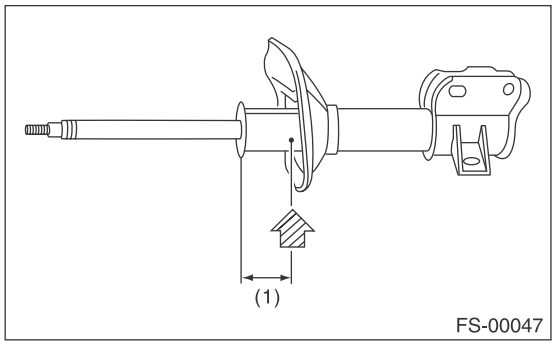

(1) 40 mm (1.57 in)

8. General Diagnostic Table

A: INSPECTION

1. IMPROPER VEHICLE POSTURE OR IMPROPER WHEEL ARCH HEIGHT

Possible cause	Corrective action
(1) Permanent distortion or damage of the coil spring	Replace.
(2) Rough operation of strut or shock absorber	Replace.
(3) Improper installation of strut or shock absorber	Replace with appropriate parts.
(4) Installation of the wrong coil spring	Replace with appropriate parts.

2. POOR RIDE COMFORT

1) Large rebound shock
2) Rocking of the vehicle continues too long after running over bump and hump.
3) Excessive shock in bumping

Possible cause	Corrective action
(1) Damaged coil spring	Replace.
(2) Overinflation of tires	Adjust.
(3) Improper wheel arch height	Replace the coil springs with new parts.
(4) Fault in operation of strut or shock absorber	Replace.
(5) Damage or deformation of strut mount or shock absorber mount	Replace.
(6) Unsuitable length (maximum or minimum) of strut or shock absorber	Replace with appropriate parts.
(7) Abnormal deformation or loss of bushing	Replace.
(8) Deformation or damage of helper in strut assembly or shock absorber	Replace.
(9) Oil leakage from the strut or shock absorber	Replace.

3. NOISE

Possible cause	Corrective action
(1) Wear or damage of strut or shock absorber component parts	Replace.
(2) Loosening of the suspension link installing bolt	Tighten to the specified torque.
(3) Deformation or loss of bushing	Replace.
(4) Unsuitable length (maximum or minimum) of strut or shock absorber	Replace with appropriate parts.
(5) Damaged coil spring	Replace.
(6) Wear or damage of the ball joint	Replace.
(7) Deformation of the stabilizer clamp	Replace.

REAR SUSPENSION

RS

Page

1. General Description 2
2. Wheel Alignment 8
3. Rear Stabilizer 9
4. Rear Trailing Link 10
5. Upper Arm 13
6. Rear Shock Absorber 14
7. Front Lateral Link 15
8. Rear Lateral Link 16
9. Rear Sub Frame 17
10. General Diagnostic Table 19

1. General Description

A: SPECIFICATION

Refer to “FS” section for rear suspension specifications. <Ref. to FS-2, SPECIFICATION, General Description.>

NOTE:
• Front and rear toe-in and front camber can be adjusted. Adjust if the toe-in or camber tolerance exceeds specifications.
• For other items indicated in the specifications table, there is no adjustment mechanism. If other items exceed specifications, check the suspension parts and connections for deformation, and replace the parts if defective.

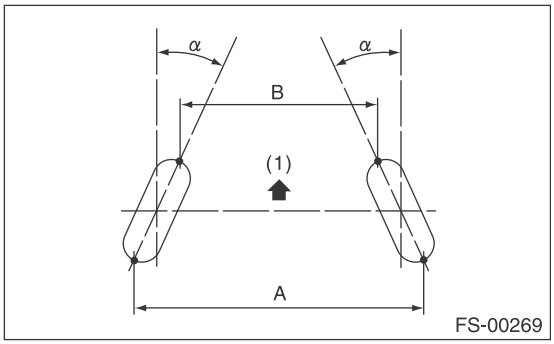

(1) Front
A – B = Positive: Toe-in, Negative: Toe-out
α = Individual toe angles

B: COMPONENT

1. REAR SUSPENSION

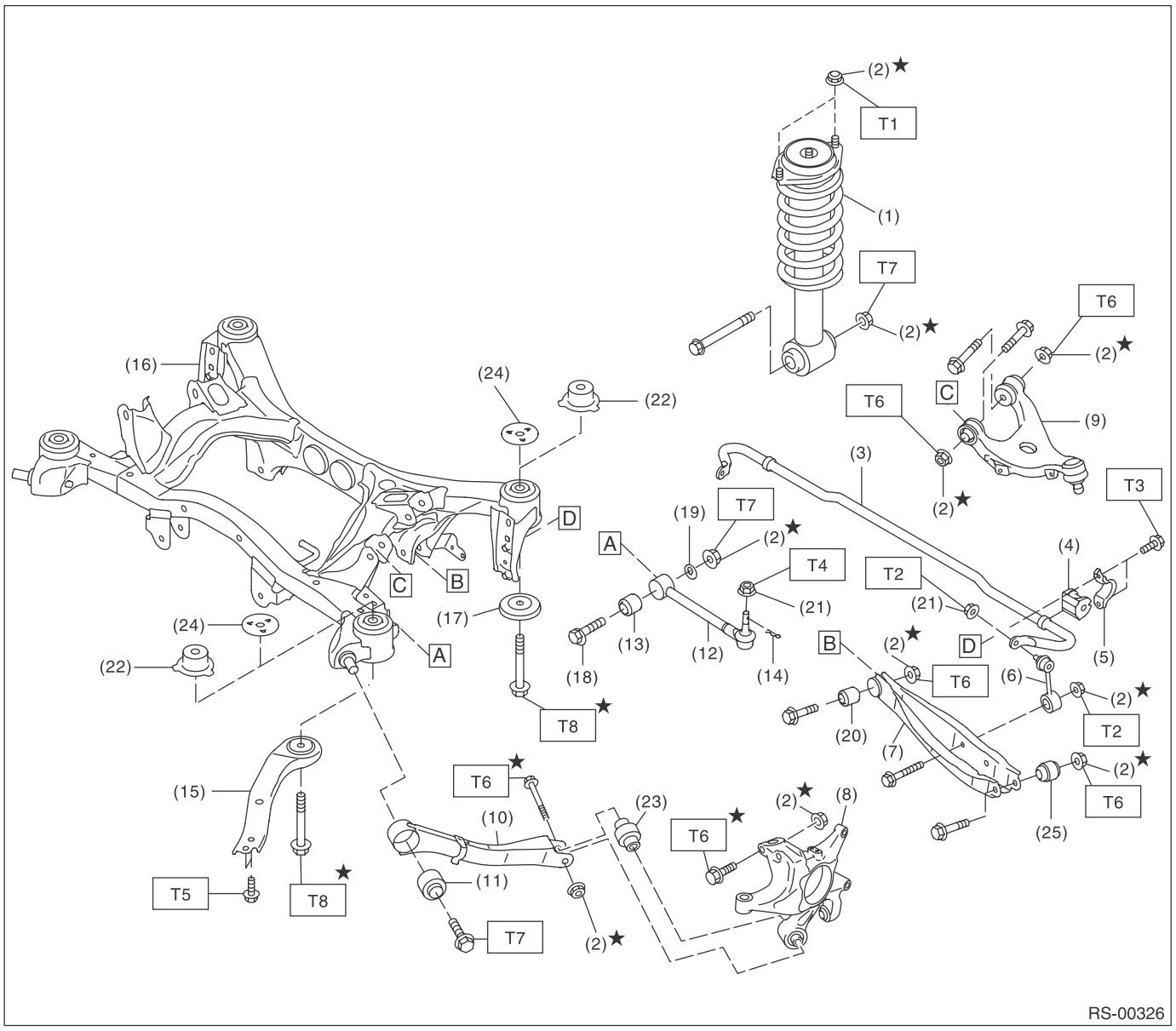

(1) Shock absorber
(2) Self-locking nut
(3) Rear stabilizer
(4) Stabilizer bushing
(5) Stabilizer clamp
(6) Stabilizer link
(7) Rear lateral link
(8) Rear housing
(9) Upper arm
(10) Trailing link
(11) Trailing link bushing
(12) Front lateral link
(13) Front lateral link bushing
(14) Snap pin
(15) Front sub frame support plate
(16) Rear sub frame
(17) Rear sub frame stopper lower
(18) Adjusting bolt
(19) Adjusting washer
(20) Rear lateral link bushing
(21) Flange nut
(22) Rear sub frame stopper upper (OUTBACK model)
(23) Trailing link rear bushing
(24) Rear sub frame stopper upper (except for OUTBACK model)
(25) Rear housing bushing

Tightening torque:N·m (kgf-m, ft-lb)
T1: 30 (3.1, 22.1)
T2: 33 (3.4, 24.3)
T3: 38 (3.9, 28)
T4: 60 (6.1, 44.3)
T5: 70 (7.1, 51.6)
T6: 80 (8.2, 59)
T7: 120 (12.2, 88.5)
T8: 200 (20.4, 147.5)

2. SHOCK ABSORBER

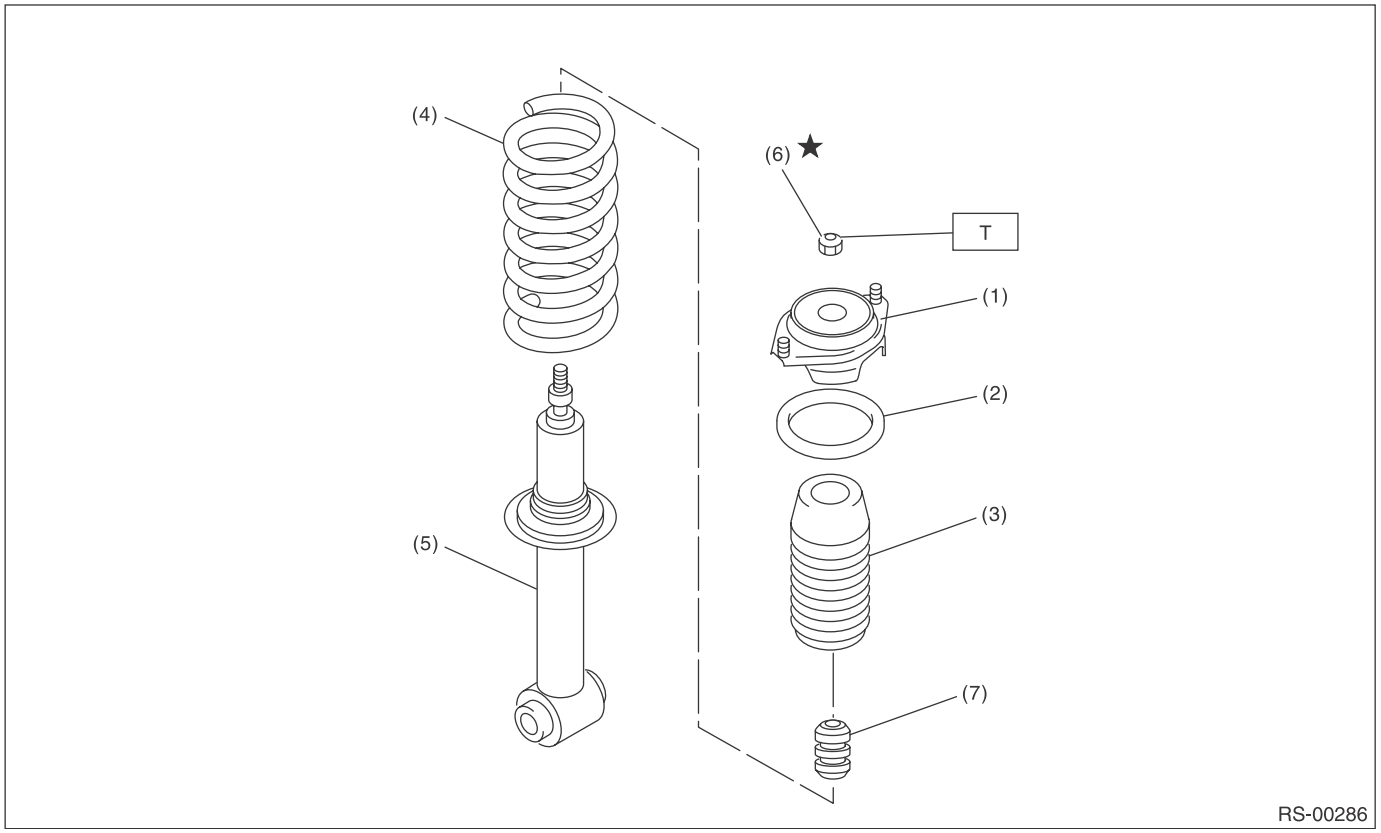

(1) Mount
(2) Upper rubber sheet
(3) Dust cover
(4) Coil spring
(5) Shock absorber
(6) Self-locking nut
(7) Helper

Tightening torque:N·m (kgf-m, ft-lb)
T: 25 (2.5, 18.4)

C: CAUTION

Please clearly understand and observe the following cautions. Please adhere to these cautions to avoid minor or serious injury to the person doing the work or people in the area.

1. EACH PROCEDURE

- Wear appropriate work clothing, including a cap, protective goggles and protective shoes when performing any work.
- Before disposing of shock absorbers, be sure to bleed the gas out completely. Also, do not expose to flames or fire.
- Before removal, installation or disassembly, be sure to clarify the failure. Avoid unnecessary removal, installation, disassembly and replacement.
- Use SUBARU genuine grease etc. or equivalent. Do not mix grease etc. of different grades or manufacturers.
- Before securing a part on a vise, place cushioning material such as wood blocks, aluminum plate, or cloth between the part and the vise.
- Be sure to tighten fasteners including bolts and nuts to the specified torque.
- Place shop jacks or rigid racks at the specified points.

2. OIL

When handling oil, adhere to the following to prevent unexpected accident.

- Prepare a container and cloth when performing work which oil possibly spills. If oil spills, wipe it off immediately to prevent from penetrating into floor or flowing out for environmental protection.
- Follow all government regulations concerning disposal of refuse when disposing.

D: PREPARATION TOOL

1. SPECIAL TOOL

ILLUSTRATION	TOOL NUMBER	DESCRIPTION	REMARKS
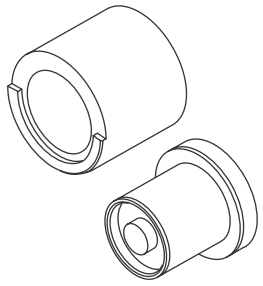 ST20099AE000	20099AE000	INSTALLER & REMOVER	Used for replacing the front lateral link bushing.
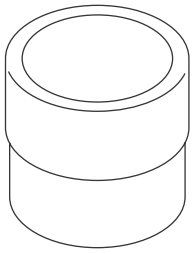 ST-499755602	499755602	PRESS	Used for replacing the rear trailing link bushing.

ILLUSTRATION	TOOL NUMBER	DESCRIPTION	REMARKS
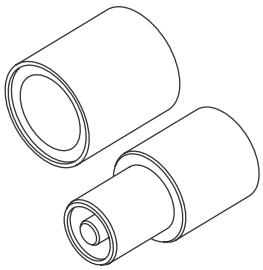 ST20099AE010	20099AE010	INSTALLER & REMOVER	Used for replacing the rear lateral link bushing.
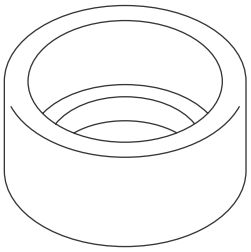 ST20299AG010	20299AG010	BASE	Used for replacing the rear trailing link bushing.
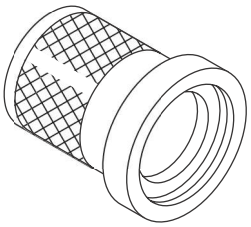 ST-899874100	899874100	INSTALLER	Used for replacing the rear trailing link bushing.
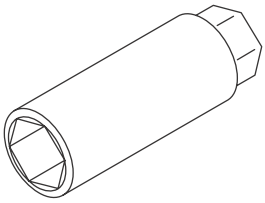 ST20399FG000	20399FG000	STRUT MOUNT SOCKET	• Used for removing and installing shock mount. • Used for checking torque of shock mount center nut.
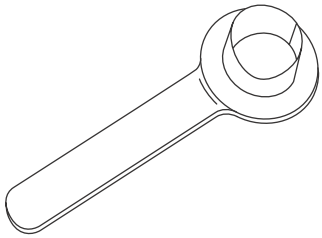 ST28099PA090	28099PA090	OIL SEAL PROTECTOR	• Used for installing the rear drive shaft to the rear differential. • For oil seal protection

ILLUSTRATION	TOOL NUMBER	DESCRIPTION	REMARKS
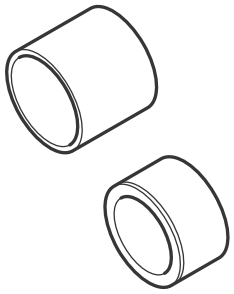 ST20099PA010	20099PA010	INSTALLER & REMOVER	• Used for replacing the bushing of the rear housing. • Used together with BUSHING REMOVER (20099FG000).
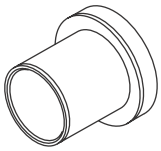 ST20099FG000	20099FG000	BUSHING REMOVER	• Used for replacing the bushing of the rear housing. • Used together with base part of INSTALLER & REMOVER (20099PA010).

2. GENERAL TOOL

TOOL NAME	REMARKS
Alignment tester	Used for measuring wheel alignment.
Toe-in gauge	Used for toe-in measurement.
Jack	Used for removing and installing suspension.
Bearing puller	Used for removing bushings.
Coil spring compressor	Used for disassembling and assembling shock absorber.

2. Wheel Alignment

A: INSPECTION

NOTE:
Measure and adjust the front and rear wheel alignment at a time. Refer to FS section for measurement and adjustment of wheel alignment. <Ref. to FS-8, INSPECTION, Wheel Alignment.>

3. Rear Stabilizer

A: REMOVAL

1) Lift up the vehicle, and then remove the rear wheels.
2) Remove the stabilizer link.

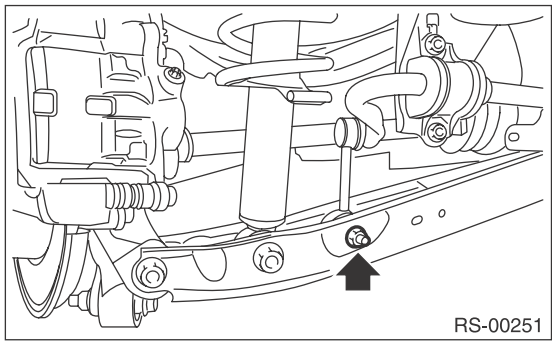

3) Remove the stabilizer clamp.

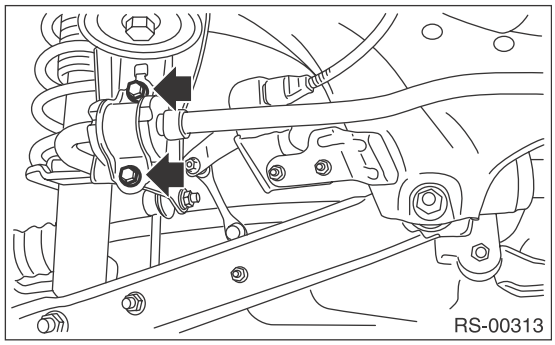

B: INSTALLATION

CAUTION:
• Be sure to use a new flange nut and self-locking nut.
• Always tighten the bushing in the state where the vehicle is at curb weight and the wheels are in full contact with the ground.
• When installing the stabilizer with paint mark (a), align the end of paint mark to the end of bushing (b).

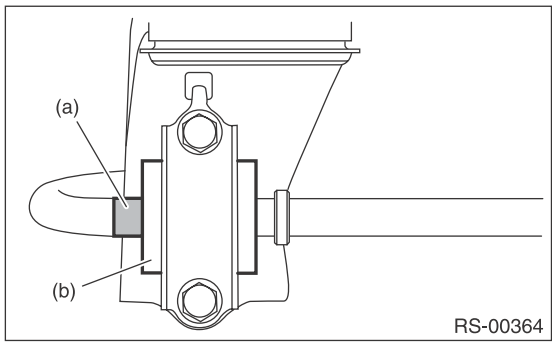

• When installing the stabilizer without paint mark, install it so that there is 6 mm (6.24 in) space between the Anti-Walk Ring (c) and the stabilizer bushing (b).

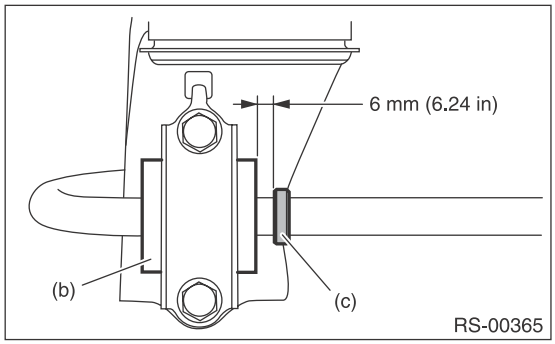

Install in the reverse order of removal.

Tightening torque:
Stabilizer link
33 N·m (3.4 kgf-m, 24.3 ft-lb)
Stabilizer clamp
38 N·m (3.9 kgf-m, 28 ft-lb)

C: INSPECTION

1) Check the bushing for abnormal cracks, fatigue or damages.
2) Check the stabilizer link for damage.

4. Rear Trailing Link

A: REMOVAL

1) Lift up the vehicle, and then remove the rear wheels.
2) Remove the bracket, and remove the parking brake cable from the guide.

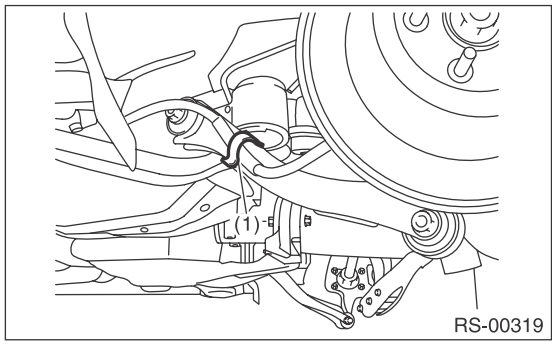

(1) GUIDE

3) Remove the trailing link.

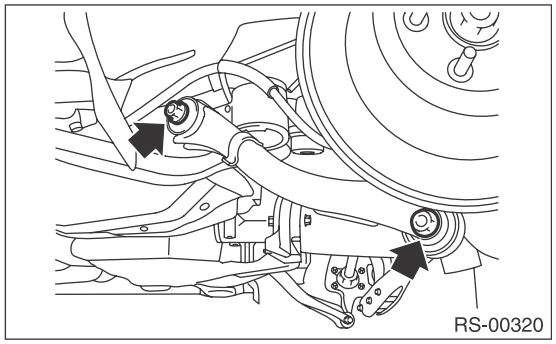

B: INSTALLATION

CAUTION:
- **Be sure to use a new self-locking nut.**
- **Always tighten the bushing in the state where the vehicle is at curb weight and the wheels are in full contact with the ground.**

Install in the reverse order of removal.

Tightening torque:
Rear trailing link to Rear sub frame
120 N·m (12.2 kgf-m, 88.5 ft-lb)
Rear trailing link to Rear housing
80 N·m (8.2 kgf-m, 59 ft-lb)

C: DISASSEMBLY

1. REAR TRAILING LINK BUSHING

Using the ST A and ST B, press the bushing out.
STA 8998741000 INSTALLER
STB 499755602 PRESS

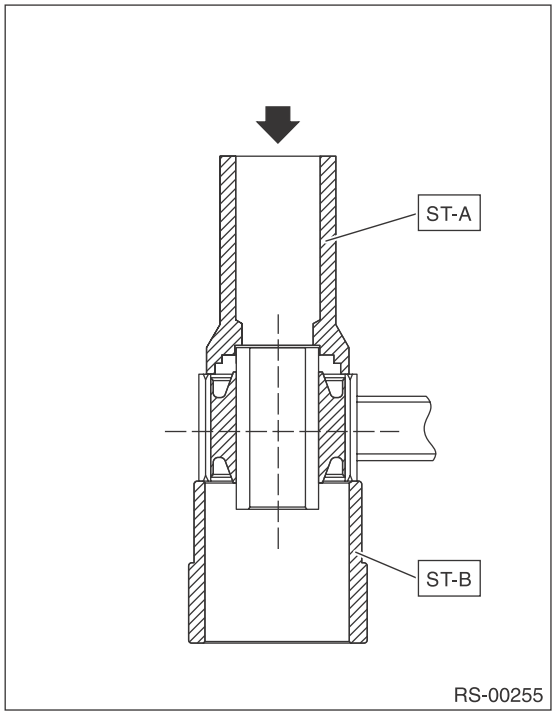

2. REAR HOUSING BUSHING

1) Remove the rear housing. <Ref. to DS-18, REMOVAL, Rear Axle.>

2) Using the ST and a hydraulic press, push out the bushing.

ST1 20099FG000 BUSHING REMOVER
ST2 20099PA010 INSTALLER & REMOVER (BASE)

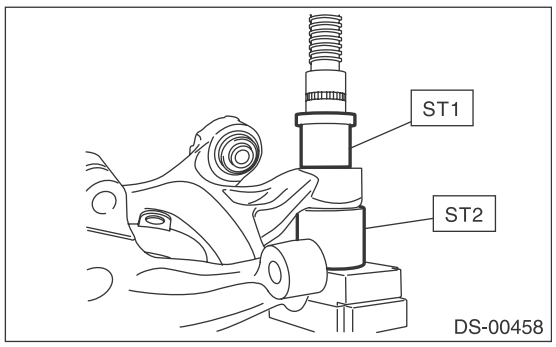

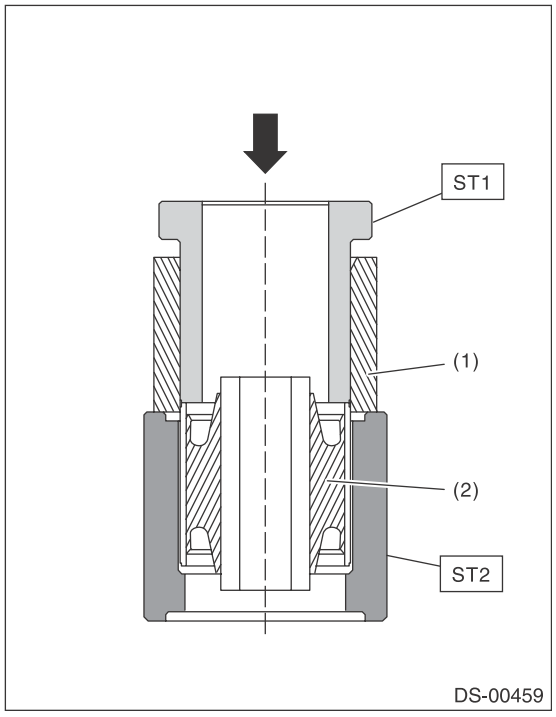

(1) Rear housing
(2) Bushing

D: ASSEMBLY

1. REAR TRAILING LINK BUSHING

Using the ST A and ST B, press-fit the bushing.

STA 8998741000 INSTALLER
STB 20299AG010 BASE

CAUTION:
Press-fit the bushing straight.

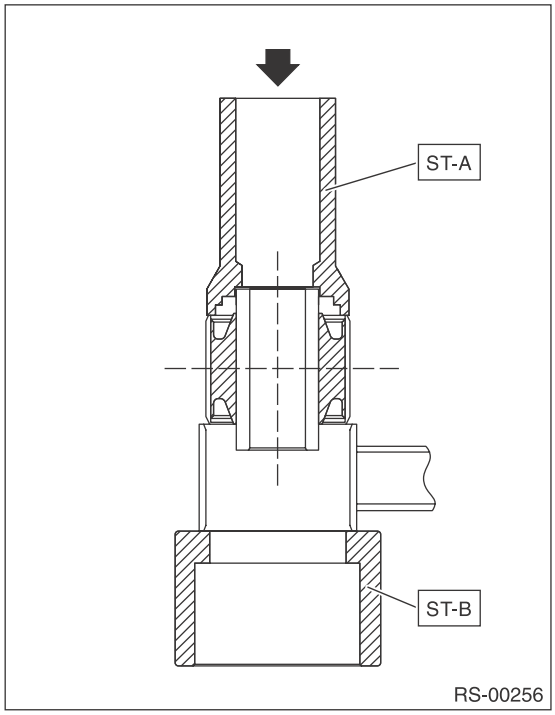

2. REAR HOUSING BUSHING

Press-fit the bushing using the ST and hydraulic press.

ST1 20099FG000 BUSHING REMOVER
ST2 20099PA010 INSTALLER & REMOVER (BASE)

CAUTION:
Press-fit the bushing straight.

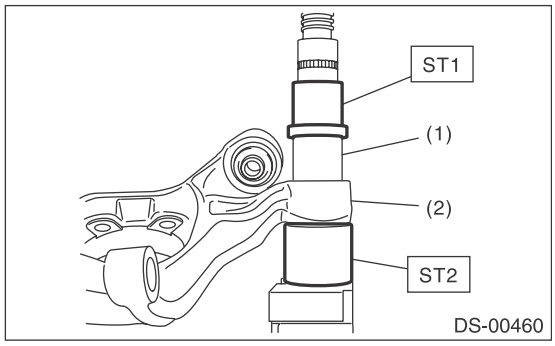

(1) Bushing
(2) Rear housing

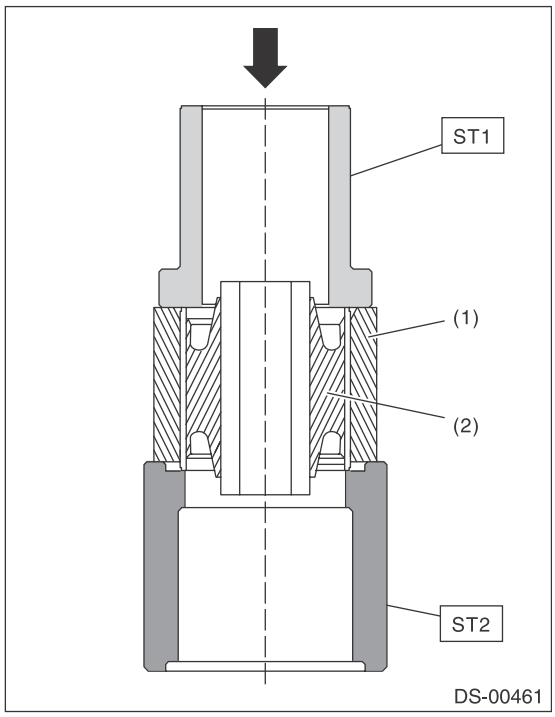

(1) Rear housing
(2) Bushing

E: INSPECTION

1) Visually check the trailing link for damage and deformation.
2) Visually check the bushing for abnormal cracks, damages or fatigue.

5. Upper Arm

A: REMOVAL

1) Remove the rear ABS wheel speed sensor from the rear axle.

CAUTION:
- **Be careful not to damage the sensor.**
- **Do not apply excessive force to the sensor harness.**

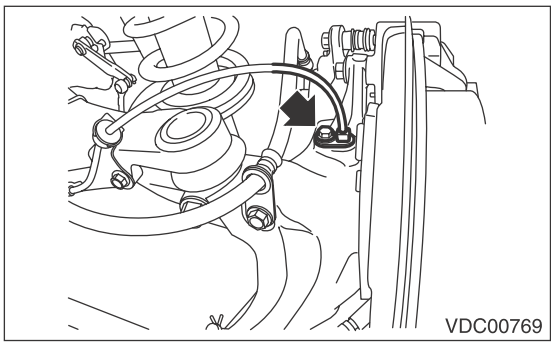

2) Remove the rear ABS wheel speed sensor bracket from the upper arm.

NOTE:
Leave the sensor harness clamp on the vehicle side.

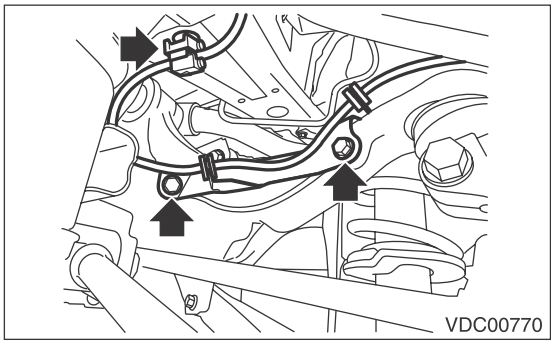

3) Remove the rear sub frame. <Ref. to RS-17, REMOVAL, Rear Sub Frame.>
4) Remove the bolts, then remove the upper arm.

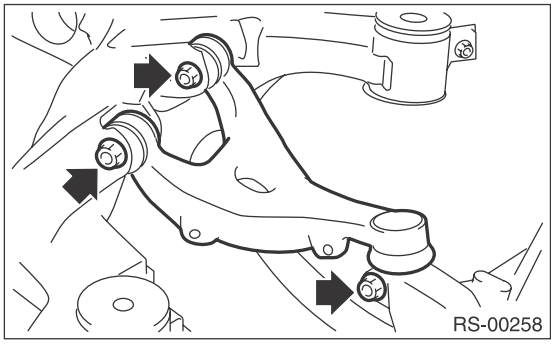

B: INSTALLATION

CAUTION:
- **Use a new self-locking nut.**
- **Always tighten the bushing at the arm position; in the state where the vehicle is at curb weight and the wheels are in full contact with the ground.**

1) Install in the reverse order of removal.
2) Inspect the wheel alignment and adjust if necessary.

Tightening torque:
Upper arm to Rear sub frame
80 N·m (8.2 kgf-m, 59 ft-lb)
Upper arm to Rear housing
80 N·m (8.2 kgf-m, 59 ft-lb)
Rear ABS wheel speed sensor bracket
7.5 N·m (0.76 kgf-m, 5.5 ft-lb)

C: INSPECTION

1) Visually check the upper arm for damage and deformation.
2) Visually check the bushing for abnormal cracks, damages or fatigue.

6. Rear Shock Absorber

A: REMOVAL

1) Remove the trunk side trim (sedan model) or luggage side mat (OUTBACK model).
2) Lift up the vehicle, and then remove the rear wheels.
3) Remove the nut, and disconnect the rear stabilizer link.
4) Remove the bolts at the bottom of the shock absorber.
5) Disconnect the rear lateral link.

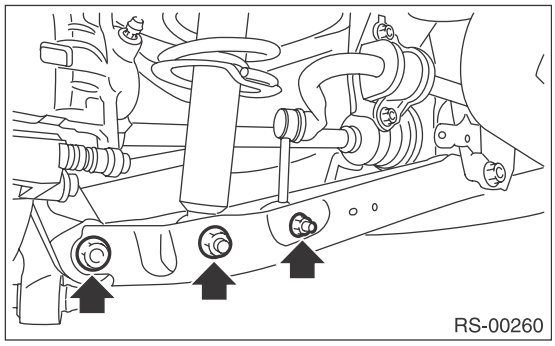

6) Remove the nuts of the shock absorber mount.

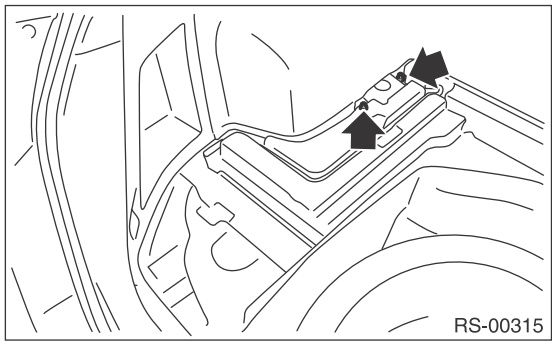

7) Remove the shock absorber.

B: INSTALLATION

CAUTION:
• Be sure to use a new self-locking nut.
• Always tighten the bushing in the state where the vehicle is at curb weight and the wheels are in full contact with the ground.
1) Install in the reverse order of removal.

Tightening torque:
Refer to "COMPONENT" of "General Description" for the tightening torque. <Ref. to RS-3, COMPONENT, General Description.>
2) Check the wheel alignment and adjust if necessary.

C: DISASSEMBLY

Refer to "Front Strut" for disassembly procedure.
<Ref. to FS-26, DISASSEMBLY, Front Strut.>

D: ASSEMBLY

Refer to "Front Strut" for installation procedures.
<Ref. to FS-26, ASSEMBLY, Front Strut.>

E: INSPECTION

Refer to "Front Strut" for inspection procedures.
<Ref. to FS-27, INSPECTION, Front Strut.>

F: DISPOSAL

CAUTION:
• Before handling the shock absorber, be sure to wear goggles to protect eyes from gas, oil and cutting powder.
• Do not disassemble the shock absorber or place it into a fire.
• Drill a hole into shock absorbers in case of discarding shock absorbers filled with gas.
1) Place the shock absorber on a level surface with the piston rod fully expanded.
2) Make a hole into the specified position 30 mm (1.18 in) deep using a drill with 2 — 3 mm (0.08 — 0.12 in) diameter.

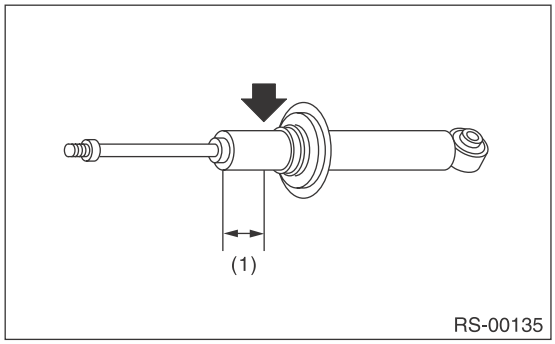

(1) 40 mm (1.57 in)

7. Front Lateral Link

A: REMOVAL

1) Lift up the vehicle, and then remove the rear wheels.
2) Remove the rear trailing link. <Ref. to RS-10, REMOVAL, Rear Trailing Link.>
3) Remove the snap pin and nut.

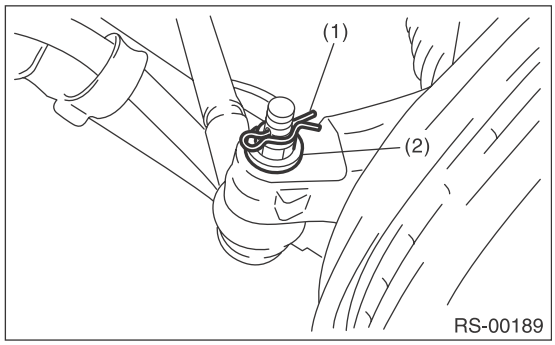

(1) Snap pin
(2) Nut

4) Using a puller, remove the ball joint.

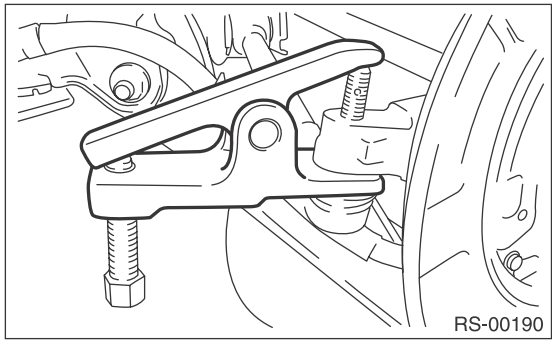

5) Place an alignment mark on the front lateral link adjusting bolt and rear sub frame.
6) Remove the adjusting bolt, and remove the front lateral link.

CAUTION:
When removing the adjusting bolt, make sure to fix the bolt head in place, and loosen the nut.

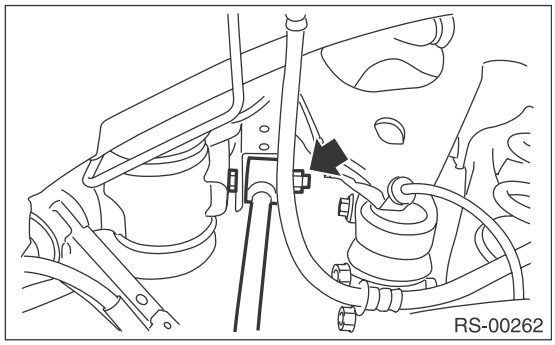

B: INSTALLATION

CAUTION:
- **Be sure to use a new self-locking nut.**
- **Always tighten the bushing in the state where the vehicle is at curb weight and the wheels are in full contact with the ground.**

1) Install in the reverse order of removal.

Tightening torque:
Front lateral link to Sub frame
120 N·m (12.2 kgf-m, 88.5 ft-lb)
Front lateral link to Rear axle housing
60 N·m (6.1 kgf-m, 44.3 ft-lb)

2) Inspect the wheel alignment and adjust if necessary.

C: DISASSEMBLY

Using the ST A and ST B, press the bushing out.
ST A 20099AE000 INSTALLER & REMOVER
ST B 20099AE000 INSTALLER & REMOVER

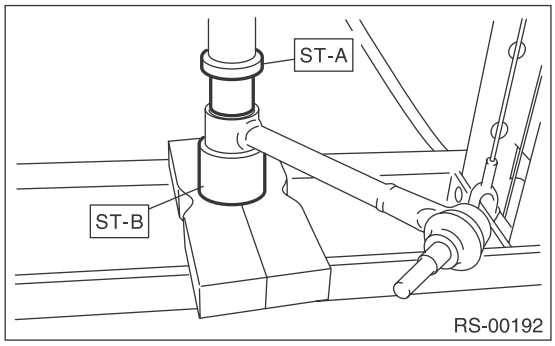

D: ASSEMBLY

Using the ST A and ST B, press-fit the bushing.
ST A 20099AE000 INSTALLER & REMOVER
ST B 20099AE000 INSTALLER & REMOVER

CAUTION:
Press-fit the bushing straight.

E: INSPECTION

1) Visually check the front lateral link for damage and deformation.
2) Visually check the bushing for abnormal cracks, damages or fatigue.

8. Rear Lateral Link

A: REMOVAL

1) Lift up the vehicle, and then remove the rear wheels.
2) Remove the nut, and remove the stabilizer link.
3) Remove the bolts at the bottom of the shock absorber.
4) Remove the bolt, and remove the rear lateral link.

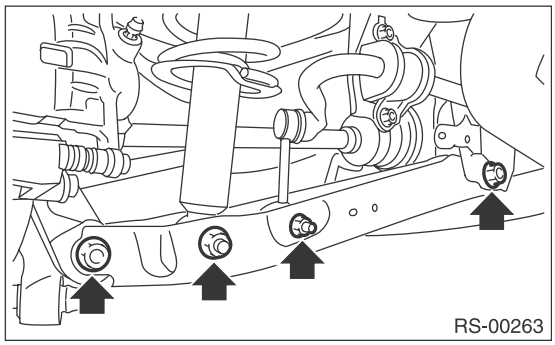

B: INSTALLATION

CAUTION:
- **Be sure to use a new self-locking nut.**
- **Always tighten the bushing in the state where the vehicle is at curb weight and the wheels are in full contact with the ground.**

1) Install in the reverse order of removal.

Tightening torque:
Rear lateral link
80 N·m (8.2 kgf-m, 59 ft-lb)
Shock absorber
80 N·m (8.2 kgf-m, 59 ft-lb)
Stabilizer link
33 N·m (3.4 kgf-m, 24.3 ft-lb)

2) Inspect the wheel alignment and adjust if necessary.

C: DISASSEMBLY

Using the ST A and ST B, press the bushing out.
STA 20099AE010 INSTALLER & REMOVER
STB 20099AE010 INSTALLER & REMOVER

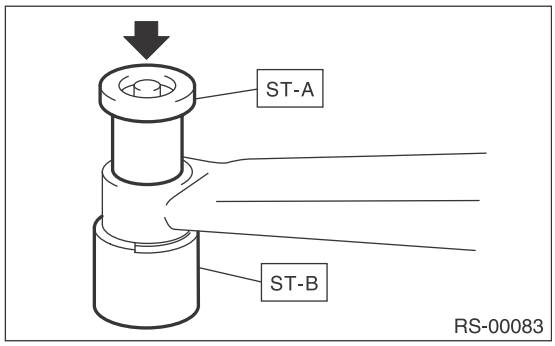

D: ASSEMBLY

Using the ST A and ST B, press-fit the bushing.
STA 20099AE010 INSTALLER & REMOVER
STB 20099AE010 INSTALLER & REMOVER

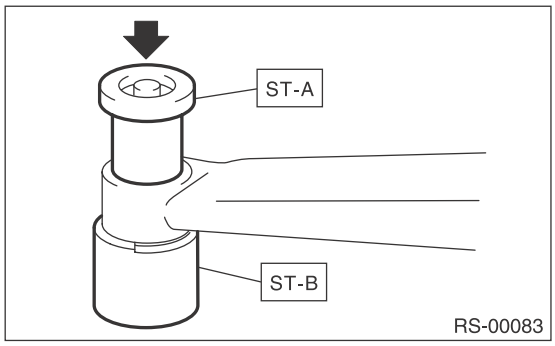

E: INSPECTION

1) Visually check the rear lateral link for damage and deformation.
2) Visually check the bushing for abnormal cracks, damages or fatigue.

9. Rear Sub Frame

A: REMOVAL

1) Disconnect the ground cable from battery.
2) Lift up the vehicle, and then remove the rear wheels.
3) Separate the front exhaust pipe and rear exhaust pipe.
4) Remove the rear exhaust pipe and muffler.
5) Remove the propeller shaft.
<Ref. to DS-10, REMOVAL, Propeller Shaft.>
6) Remove the brake hose bracket.

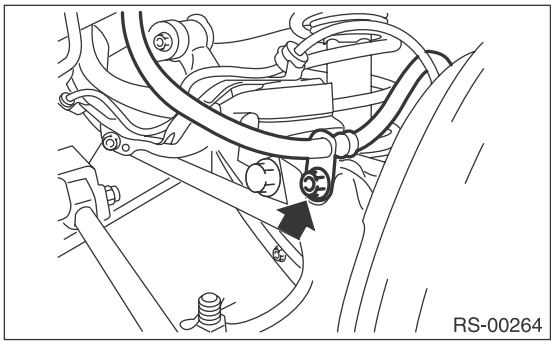

7) Remove the rear disc brake caliper, and suspend it to the shock absorber.

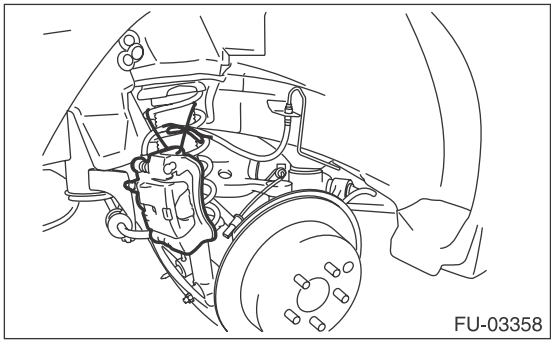

8) Disconnect the rear parking brake cable from the parking brake assembly. <Ref. to PB-6, REMOVAL, Parking Brake Assembly (Rear Disc Brake).>
9) Remove the rear ABS wheel speed sensor harness bracket from the upper arm.

NOTE:
Leave the sensor harness clamp on the vehicle side.

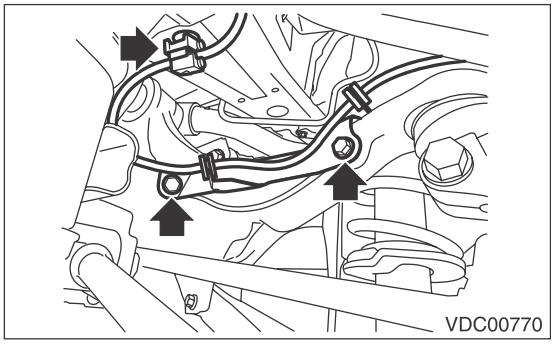

10) Remove the rear ABS wheel speed sensor from the rear axle.

CAUTION:
- **Be careful not to damage the sensor.**
- **Do not apply excessive force to the sensor harness.**

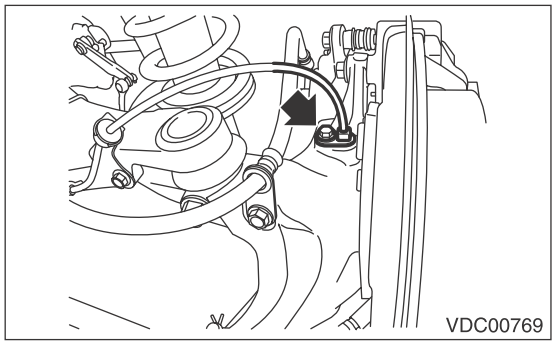

11) Remove the bolts at the bottom of the shock absorber.

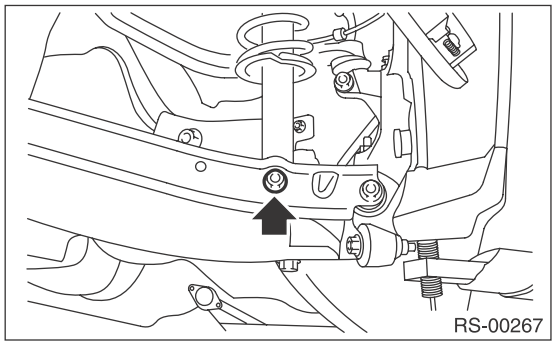

12) Support the sub frame using a jack.
13) Remove the rear sub frame.

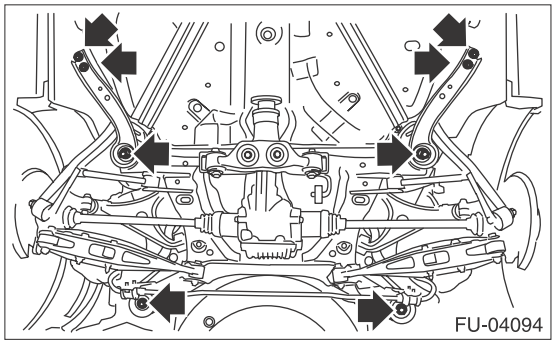

B: INSTALLATION

CAUTION:
- **Be sure to use a new self-locking nut.**
- **Always tighten the bushing in the state where the vehicle is at curb weight and the wheels are in full contact with the ground.**

1) Install in the reverse order of removal.

Tightening torque:
Refer to "COMPONENT" of "General Description" for the tightening torque. <Ref. to RS-3, COMPONENT, General Description.>

2) Bleed air from brake system.
3) Inspect the wheel alignment and adjust if necessary.

C: INSPECTION

Check the removed parts for wear, damage and crack, and repair or replace them if faulty.

10.General Diagnostic Table

A: INSPECTION

1. IMPROPER VEHICLE POSTURE OR IMPROPER WHEEL ARCH HEIGHT

Possible cause	Corrective action
(1) Permanent distortion or damaged coil spring	Replace.
(2) Rough operation of shock absorber	Replace.
(3) Installation of the wrong shock absorber	Replace with proper parts.
(4) Installation of the wrong coil spring	Replace with proper parts.

2. POOR RIDE COMFORT

1) Large rebound shock
2) Rocking of the vehicle continues too long after running over bump and hump.
3) Excessive shock in bumping

Possible cause	Corrective action
(1) Damaged coil spring	Replace.
(2) Overinflation of tires	Adjust.
(3) Improper wheel arch height	Replace the coil springs with new parts.
(4) Defective operation of shock absorber	Replace.
(5) Damage or deformation of shock absorber mount	Replace.
(6) Unsuitable length (maximum or minimum) of shock absorber	Replace with appropriate parts.
(7) Deformation or loss of bushing	Replace.
(8) Deformation or damage of helper in shock absorber	Replace.
(9) Oil leakage from the shock absorber	Replace.

3. NOISE

Possible cause	Corrective action
(1) Wear or damage of shock absorber component parts	Replace.
(2) Loosening of the suspension link or arm installing bolt	Tighten to the specified torque.
(3) Deformation or loss of bushing	Replace.
(4) Unsuitable length (maximum or minimum) of shock absorber	Replace with appropriate parts.
(5) Damaged coil spring	Replace.
(6) Wear or damage of the ball joint	Replace.
(7) Deformation of the stabilizer clamp	Replace.

WHEEL AND TIRE SYSTEM

WT

Page

1. General Description 2
2. Tire and Wheel 4
3. “T-type” Tire 6
4. Tire Pressure Monitoring System 7
5. General Diagnostic Table 9

1. General Description

A: SPECIFICATION

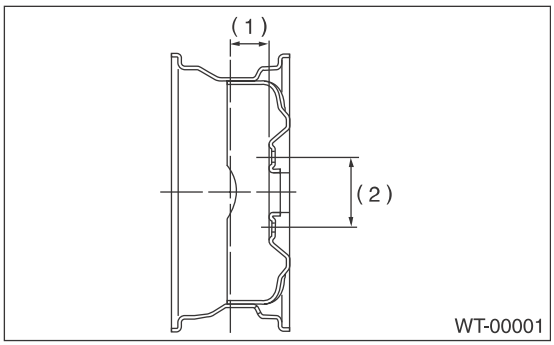

(1) Offset
(2) P.C.D.

Tire size	Wheel size	Offset mm (in)	P.C.D. mm (in)	Tire inflation pressure kPa (kgf/cm^2, psi)	
				Front wheel	Rear wheel
P205/60R16 91V	16 × 6 1/2JJ 16 × 6 1/2 J	48 (1.89)	100 (3.94)	230 (2.3, 33)	220 (2.2, 32)
P215/50R17 90V	17 × 7 1/2 J				
P225/50R17 93V	17 × 7 1/2 J				
P215/70R16 99S	16 × 6 1/2JJ			220 (2.2, 32)	210 (2.1, 31)
P225/60R17 98T	17 × 7J				
225/45R18 91W	18 × 7 1/2 J	55 (2.17)		230 (2.3, 33)	220 (2.2, 32)
T135/80R16 101M	16 × 4T	20 (0.79)		–	420 (4.2, 60)
T135/70R17 102M	17 × 4T				
T145/80R17 97M					

NOTE:
Size and inflation pressure of the standard equipment tire and spare tire for emergency are described on the “Tire inflation pressure” label attached to the body side of the driver’s door.

1. SERVICE DATA

Part	Axial runout	Radial runout
Steel wheel	1.5 mm (0.059 in)	
Aluminum wheel	1.0 mm (0.039 in)	

Wheel balancing	Standard:	Service limit
Dynamic unbalance	5 g (0.18 oz) or less	

B: COMPONENT

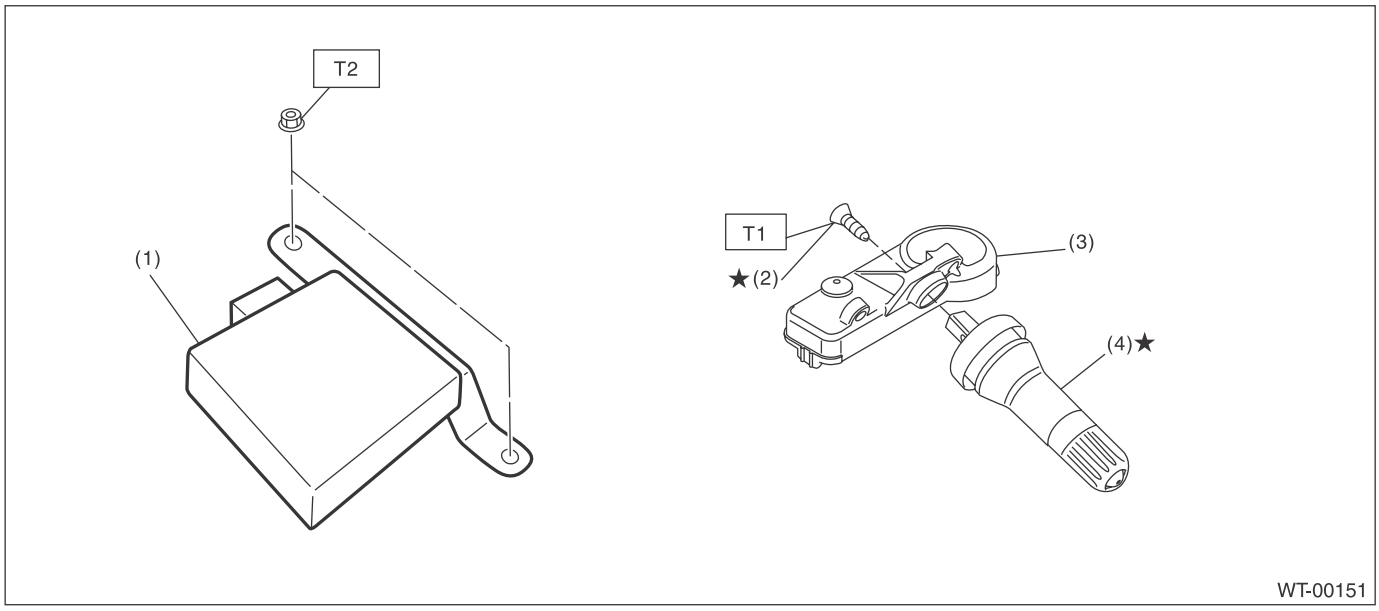

(1) Tire inflation pressure monitor control module
(2) Screw
(3) Transmitter (snap-in type)
(4) Valve

Tightening torque:N·m (kgf-m, ft-lb)

T1: 1.4 (0.14, 1)
T2: 8 (0.8, 5.9)

C: PREPARATION TOOL

1. GENERAL TOOL

TOOL NAME	REMARKS
Air pressure gauge	Used for measuring tire air pressure.
Dial gauge	Used for measuring wheel runout.
Wheel balancer	Used for adjusting wheel balance.

2. Tire and Wheel

A: REMOVAL

1) Remove the hubcap. (model with hubcap)
2) Lift up the vehicle.
3) Remove the wheel nut.
4) Remove the wheels.

NOTE:
When removing the wheels, be careful not to damage the hub bolts.

B: INSTALLATION

1) Install the wheels to the vehicle.
2) Tighten the wheel nuts to the specified torque.

Tightening torque:
120 N·m (12.2 kgf-m, 88.5 ft-lb)

C: INSPECTION

1. TIRE

CAUTION:
When replacing a tire, make sure to use only tires of the same size, construction and load range as originally installed.
1) Tire size and tire inflation pressure check <Ref. to WT-2, SPECIFICATION, General Description.>
2) Cracks, damage and wear check
3) Tire runout check
(1) Lift up the vehicle.
(2) Slowly rotate the wheel to check rim “runout” using a dial gauge.

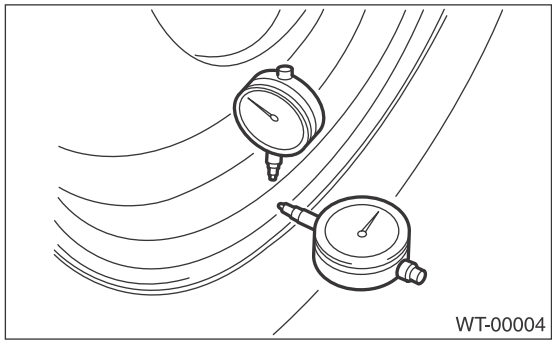

- Aluminum wheel

Axial runout limit	Radial runout limit
1.0 mm (0.039 in)	

- Steel wheel

Axial runout limit	Radial runout limit
1.5 mm (0.059 in)	

(3) If the rim runout exceeds service limit, replace the wheel.

2. TIRE ROTATION

NOTE:
Rotate tires periodically (12,500 km/7,500 miles) in order to prolong life and to prevent uneven wear.
Rotate tires as shown in the figure depending on whether or not the direction of the tire rotation is specified.

- When the direction of tire rotation is not specified

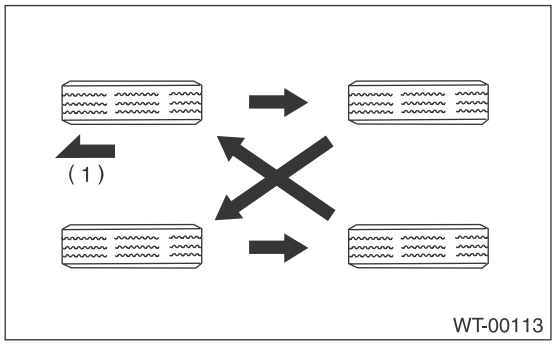

(1) Front side of vehicle

- When the direction of tire rotation is specified

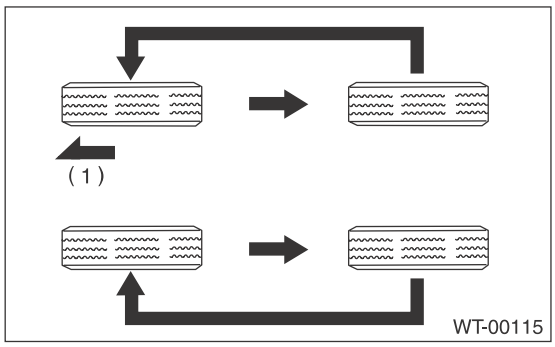

(1) Front side of vehicle

3. WHEEL BALANCING

1) Using the wheel balancer, measure wheel balance.
2) Adjust the wheel balancing.

NOTE:
- Unbalance after adjusting the wheel balancing should be 5 g (0.18 oz) or less.
- When using the adhesive type weight, degrease the surface where the adhesive type weight will be applied securely.
- After applying the adhesive type weight, apply a force to the weight and attain full adhesion.

• Using the knock-on type weight, check the size of the knock-on part.

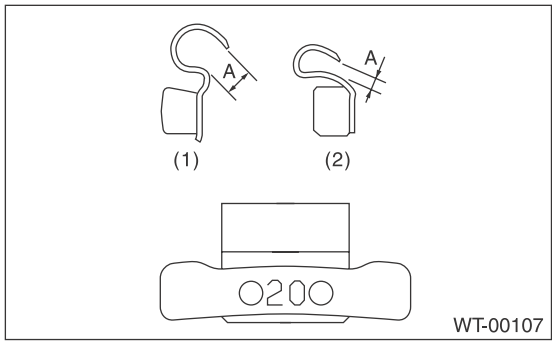

(1) Knock-on type weight for aluminum wheel
(2) Knock-on type weight for steel wheel

Service limit A:
Knock-on type weight for steel wheel:
2.0 mm (0.079 in)
Knock-on type weight for aluminum wheel:
5.0 mm (0.197 in)

3. "T-type" Tire

A: NOTE

"T-type" tire for temporary use is prepared as a spare tire.

CAUTION:
• The "T-type" tire is only for temporary use. Replace with a conventional tire as soon as possible.
• Do not use tire chains for "T-type" tires. Doing so can damage the vehicle and the tires because the tires are too small in size to attach chains to.
• Do not drive at a speed greater than 80 km/h (50 MPH).
• Drive at as low a speed as possible and avoid bumps on the road.

B: REPLACEMENT

Refer to "Tire & Wheel" for removal and installation of the "T-type" tire. <Ref. to WT-4, Tire and Wheel.>

C: INSPECTION

Refer to "Tire & Wheel" for inspection of the "T-type" tire. <Ref. to WT-4, TIRE, INSPECTION, Tire and Wheel.>

4. Tire Pressure Monitoring System

A: REMOVAL

1. TRANSMITTER (TIRE INFLATION PRESSURE SENSOR)

1) Remove the wheels from the vehicle. <Ref. to WT-4, REMOVAL, Tire and Wheel.>
2) Remove the tire from the wheel.

CAUTION:
When removing the tire from the wheel, use the tire changer.

3) Remove the screw, and remove the transmitter from the valve stem.

NOTE:
When reusing the transmitter, replace the valve and screw with new parts.

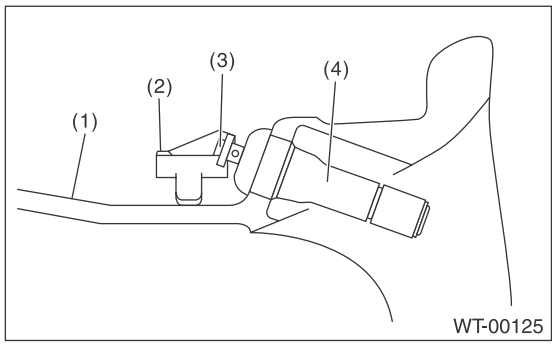

(1) Wheel
(2) Transmitter
(3) Screw
(4) Valve

4) Remove the valve from the wheel.

2. TIRE PRESSURE MONITORING CONTROL MODULE

1) Remove the driver's seat. <Ref. to SE-10, REMOVAL, Front Seat.>
2) Turn over the floor mat.
3) Remove the connector, and remove the tire inflation pressure monitor control module.

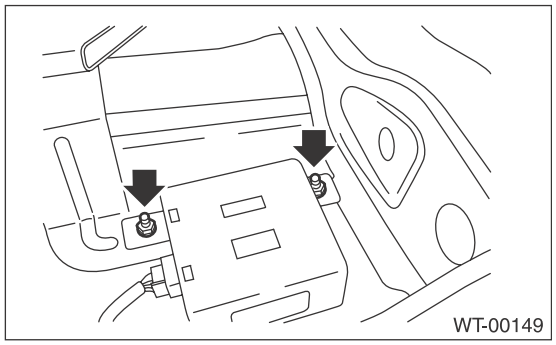

B: INSTALLATION

1. TRANSMITTER (TIRE INFLATION PRESSURE SENSOR)

CAUTION:
When installing, use new transmitter assembly or the transmitter equipped with new valve and screw.

1) When reusing the transmitter, replace the valve and screw with new parts and install.

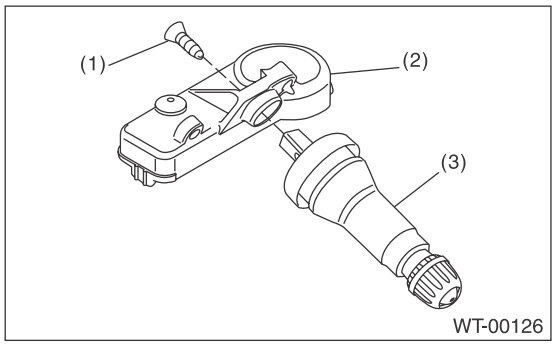

(1) Screw
(2) Transmitter
(3) Valve

Tightening torque:
1.4 N·m (0.14 kgf-m, 1 ft-lb)

2) Align the transmitter with the valve hole, and install.

NOTE:
When using the jig which is used by hitching the root of the valve cap and pulling it out, use different short cap.

3) Install the tire to the wheel.

CAUTION:
• When installing the tire to the wheel, use the tire changer.

• Set the tire changer boom to the position shown in the figure so as not to damage the transmitter.

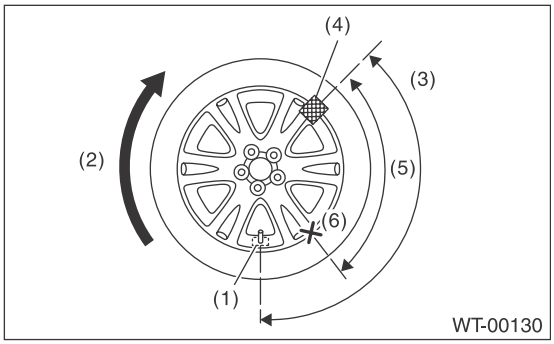

(1) Transmitter
(2) Direction of the turn table rotation
(3) 135°
(4) Tire changer boom
(5) 90°
(6) Starting point where bead is inserted into the rim

4) Install the wheels to the vehicle. <Ref. to WT-4, INSTALLATION, Tire and Wheel.>
5) Register the transmitter ID to the tire inflation pressure monitor control module. <Ref. to TPM(diag)-14, Register Transmitter (ID).>

2. TIRE PRESSURE MONITORING CONTROL MODULE

Install in the reverse order of removal.

Tightening torque:
8 N·m (0.8 kgf-m, 5.9 ft-lb)

C: ADJUSTMENT

If the transmitter is replaced, re-register the transmitter ID. <Ref. to TPM(diag)-14, Register Transmitter (ID).>

5. General Diagnostic Table

A: INSPECTION

Symptoms	Possible cause	Corrective action
The vehicle wobbles.	Improper tire air pressure	Adjust the tire pressure.
	Tire uneven wear	Check according to the “Abnormal wear of tire”, and repair it after performing action.
	Front wheel alignment	Check the front wheels alignment. <Ref. to FS-8, INSPECTION, Wheel Alignment.>
	Rear wheel alignment	Check the rear wheels alignment. <Ref. to RS-8, INSPECTION, Wheel Alignment.>
	Front strut	Check the front struts. <Ref. to FS-27, INSPECTION, Front Strut.>
	Rear shock absorber	Check the rear shock absorber. <Ref. to RS-14, INSPECTION, Rear Shock Absorber.>
	Front axle	Check the front axle. <Ref. to DS-15, INSPECTION, Front Axle.>
	Front hub unit bearing	Check the front hub unit bearings. <Ref. to DS-17, INSPECTION, Front Hub Unit Bearing.>
	Rear hub unit bearing	Check the rear hub unit bearings. <Ref. to DS-24, INSPECTION, Rear Hub Unit Bearing.>
The vehicle swings abnormally.	Improper tire air pressure	Adjust the tire pressure.
	Tire uneven wear	Check according to the “Abnormal wear of tire”, and repair it after performing action.
	Front stabilizer	Check the front stabilizer.
	Front wheel alignment	Check the front wheels alignment. <Ref. to FS-8, INSPECTION, Wheel Alignment.>
	Rear wheel alignment	Check the rear wheels alignment. <Ref. to RS-8, INSPECTION, Wheel Alignment.>
Abnormal wheel vibration	Improper tire air pressure	Adjust the tire pressure.
	Tire uneven wear	Check according to the “Abnormal wear of tire”, and repair it after performing action.
	Improper wheel balancing	Check the wheel balancing. <Ref. to WT-4, WHEEL BALANCING, INSPECTION, Tire and Wheel.>
	Front axle	Check the front axle. <Ref. to DS-15, INSPECTION, Front Axle.>
	Front hub unit bearing	Check the front hub unit bearings. <Ref. to DS-17, INSPECTION, Front Hub Unit Bearing.>
	Rear hub unit bearing	Check the rear hub unit bearings. <Ref. to DS-24, INSPECTION, Rear Hub Unit Bearing.>
Abnormal wear of tire	Improper tire air pressure	Adjust the tire pressure.
	Improper wheel balancing	Check the wheel balancing. <Ref. to WT-4, WHEEL BALANCING, INSPECTION, Tire and Wheel.>
	Front wheel alignment	Check the front wheels alignment. <Ref. to FS-8, INSPECTION, Wheel Alignment.>
	Rear wheel alignment	Check the rear wheels alignment. <Ref. to RS-8, INSPECTION, Wheel Alignment.>

TIRE PRESSURE MONITORING SYSTEM (DIAGNOSTICS)

TPM(diag)

		Page
1.	Basic Diagnostic Procedure	2
2.	General Description	4
3.	Electrical Component Location	6
4.	Control Module I/O Signal	7
5.	Subaru Select Monitor	8
6.	Read Diagnostic Trouble Code (DTC)	11
7.	Clear Memory Mode	12
8.	Read Current Data	13
9.	Register Transmitter (ID)	14
10.	Display Transmitter (ID)	15
11.	Inspection Mode	16
12.	Tire Pressure Warning Light / Trouble Indicator Light Illumination Pattern	17
13.	List of Diagnostic Trouble Code (DTC)	23
14.	Diagnostic Procedure with Diagnostic Trouble Code (DTC)	25
15.	General Diagnostic Table	34

1. Basic Diagnostic Procedure

A: PROCEDURE

CAUTION:
When removing or installing, remove all foreign matter (dust, water, and oil) from the tire inflation pressure monitoring control module connectors.

NOTE:
To check harness for open or short circuits, shake the suspected trouble spot or connector.

	Step	Check	Yes	No
1	**CHECK PRE-INSPECTION.** 1) Ask the user from when the warning light is lit or blinking. 2) Before performing diagnostics, check the component which might affect the problems of tire inflation pressure monitoring system. <Ref. to TPM(diag)-4, INSPECTION, General Description.>	Is the component that might influence the tire inflation pressure monitoring system problem normal?	Go to step **2**.	Repair or replace each component.
2	**CHECK DIAGNOSTIC TROUBLE CODE (DTC).** 1) Turn the ignition switch to OFF. 2) Connect the Subaru Select Monitor to data link connector. 3) Turn the ignition switch to ON and run the Subaru Select Monitor. NOTE: If the communication function of the Subaru Select Monitor cannot be executed properly, check the communication circuit. <Ref. to TPM(diag)-9, COMMUNICATION FOR INITIALIZING IMPOSSIBLE, INSPECTION, Subaru Select Monitor.> 4) Read the DTC. <Ref. to TPM(diag)-11, OPERATION, Read Diagnostic Trouble Code (DTC).>	Is DTC displayed?	Go to step **4**.	Go to step **3**.
3	**PERFORM GENERAL DIAGNOSTICS.** 1) Perform the inspection by referring to “General Diagnostic Table”. <Ref. to TPM(diag)-34, General Diagnostic Table.> 2) Perform the Clear Memory Mode. <Ref. to TPM(diag)-12, OPERATION, Clear Memory Mode.> 3) Perform the Inspection Mode. <Ref. to TPM(diag)-16, Inspection Mode.> 4) Read the DTC. <Ref. to TPM(diag)-11, OPERATION, Read Diagnostic Trouble Code (DTC).> Check the DTC is not displayed.	Does the inflation pressure warning light turn on upon IG ON and go off after approx. 2 seconds?	Finish the diagnosis.	Check the tire inflation pressure warning light. <Ref. to TPM(diag)-17, Tire Pressure Warning Light / Trouble Indicator Light Illumination Pattern.>

	Step	Check	Yes	No
4	**PERFORM DIAGNOSIS.** 1) Refer to “List of Diagnostic Trouble Code (DTC)”. 2) Correct the cause of trouble. 3) Perform the Clear Memory Mode. <Ref. to TPM(diag)-12, OPERATION, Clear Memory Mode.> 4) Perform a driving test. Drive the vehicle at a speed of 40 km/h (25 MPH) or more for at least 10 minutes. 5) Read the DTC. <Ref. to TPM(diag)-11, OPERATION, Read Diagnostic Trouble Code (DTC).>	Is DTC displayed?	Repeat the steps 1 to 4 until DTC is not shown.	Finish the diagnosis.

2. General Description

A: CAUTION

1. SUPPLEMENTAL RESTRAINT SYSTEM "AIRBAG"

Airbag system wiring harness is routed near the TPM control module.

CAUTION:
• Do not use electrical test devices on any airbag system wiring harness circuits.
• Be careful not to damage the airbag system wiring harness when servicing the tire inflation pressure monitoring control module.

2. TIRE PRESSURE MONITORING CONTROL MODULE

• If a transmitter is replaced, the ID of the new transmitter must be registered. <Ref. to TPM(diag)-14, OPERATION, Register Transmitter (ID).>
• When adjusting tire inflation pressure indoors in winter, there is a big temperature difference between the indoor facilities and outside. Once the car is outside where the temperature is lower, the air pressure in the tires will drop, causing the tire inflation pressure warning light to illuminate, even if the pressure in the tires was adjusted to standard values indoors. To avoid this, it is necessary to adjust the tire inflation pressure to the high side in consideration of the difference in temperature between inside and outside according to the following table.

a. Sedan model

Temperature °C (°F)	Indoor temperature	15.5 (60)		
	Outdoor temperature	–1 (30)	–12 (10)	–23 (–10)
Tire inflation pressure kPa (psi)	Front	250 (36)	265 (38)	280 (40)
	Rear	240 (35)	255 (37)	270 (39)

b. OUTBACK model

Temperature °C (°F)	Indoor temperature	15.5 (60)		
	Outdoor temperature	–1 (30)	–12 (10)	–23 (–10)
Tire inflation pressure kPa (psi)	Front	240 (35)	255 (37)	270 (39)
	Rear	230 (33)	245 (35)	255 (37)

B: INSPECTION

Before performing diagnosis, check the following item which might affect the quality of the tire pressure monitoring system.

1. TIRE

• Inspect that the tire pressure is within the specification while the tire is cool. (Refer to Tire Caution Label.)
• Check the tires for damage or the insertion of foreign matters.

2. BATTERY

Check that amount of battery fluid, gravity and voltage are within the specifications.

Standard voltage: 12 V or more

Specific gravity: 1.260 or more

C: PREPARATION TOOL

1. SPECIAL TOOL

ILLUSTRATION	TOOL NUMBER	DESCRIPTION	REMARKS
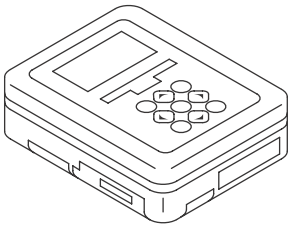 ST1B022XU0	1B022XU0	SUBARU SELECT MONITOR III KIT	Used for troubleshooting the electrical system.

2. GENERAL TOOL

TOOL NAME	REMARKS
Circuit tester	Used for measuring resistance, voltage and current.
Transmitter registration tool	Used to register the transmitter ID. Manufacturer: Kent-Moore Item number: J45295

3. Electrical Component Location

A: LOCATION

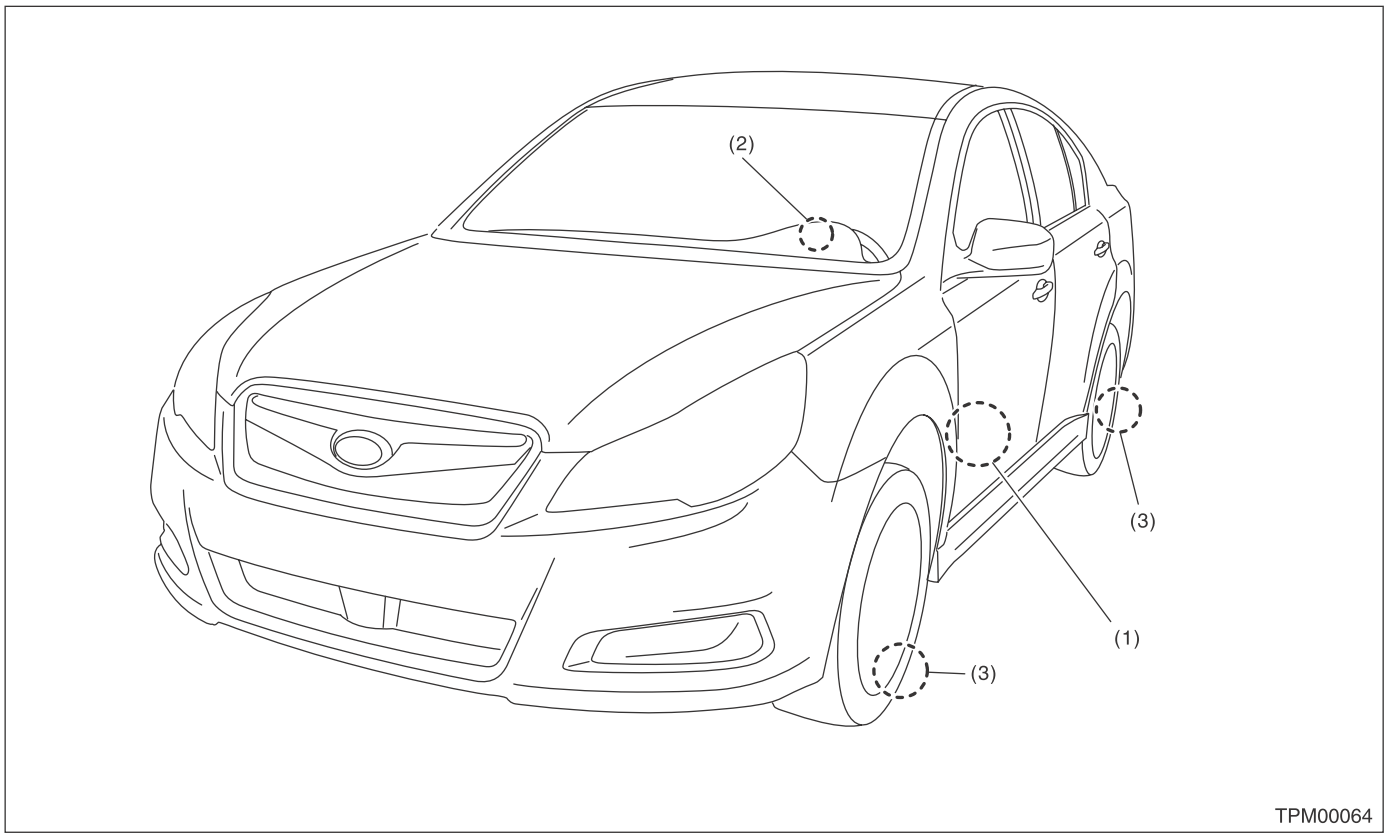

(1) Tire inflation pressure monitoring control module
(2) Tire inflation pressure warning light
(3) Snap-in transmitter

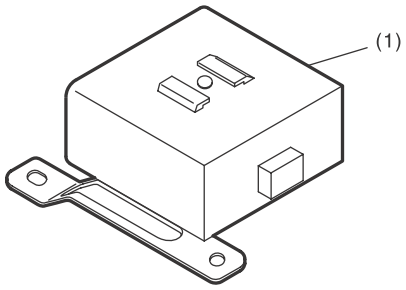

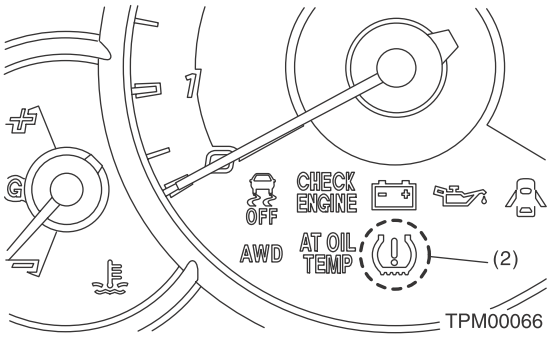

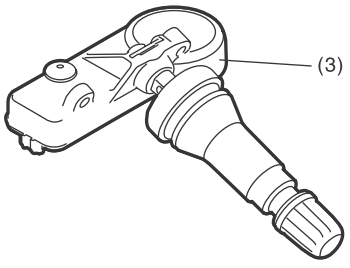

4. Control Module I/O Signal

A: ELECTRICAL SPECIFICATION

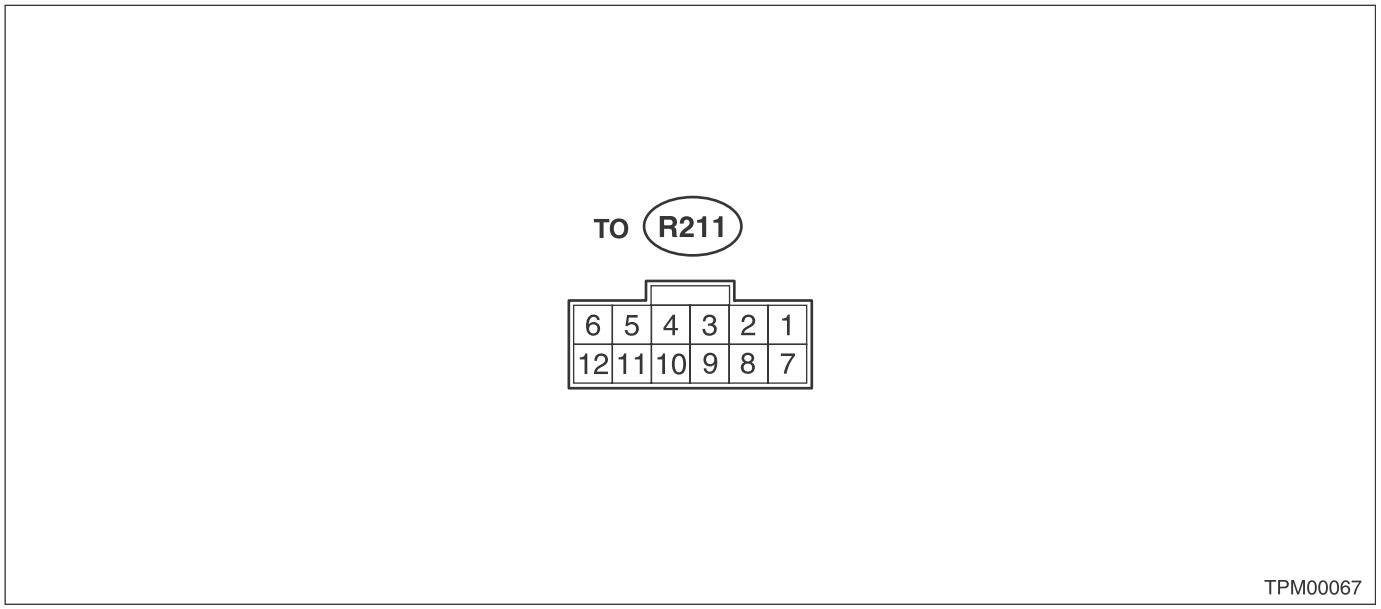

Terminal No.	Measured value	Measuring condition	Remarks
1	Select monitor communication	Serial communication	—
2	Tire inflation pressure warning light output	Light up when failure occurs or tire inflation pressure decreases	System failure: Blink 25 cycles → Remain on Pressure decreases: Light up
4	Speed sensor signal	Traveling (pulse signal)	Vary with vehicle speed
5	Ignition power supply	IG switch ON (battery voltage)	—
6	Battery power supply	Battery voltage	Always
8	Body integrated unit (hazard output signal)	—	When hazard warning light is lit
9	GND	0 V (constantly)	Always

B: WIRING DIAGRAM

<Ref. to WI-220, WIRING DIAGRAM, Tire Pressure Monitoring System.>

5. Subaru Select Monitor

A: OPERATION

For the operation procedure, refer to the “PC application help for Subaru Select Monitor”.

NOTE:
If the tire inflation pressure monitoring control module and Subaru Select Monitor can not communicate, check the communication circuit. <Ref. to TPM(diag)-9, INSPECTION, Subaru Select Monitor.>

B: INSPECTION

1. COMMUNICATION FOR INITIALIZING IMPOSSIBLE

DETECTING CONDITION:
Defective harness connector
TROUBLE SYMPTOM:
Communication is impossible between the tire inflation pressure monitoring control module and the Subaru Select Monitor.
WIRING DIAGRAM:

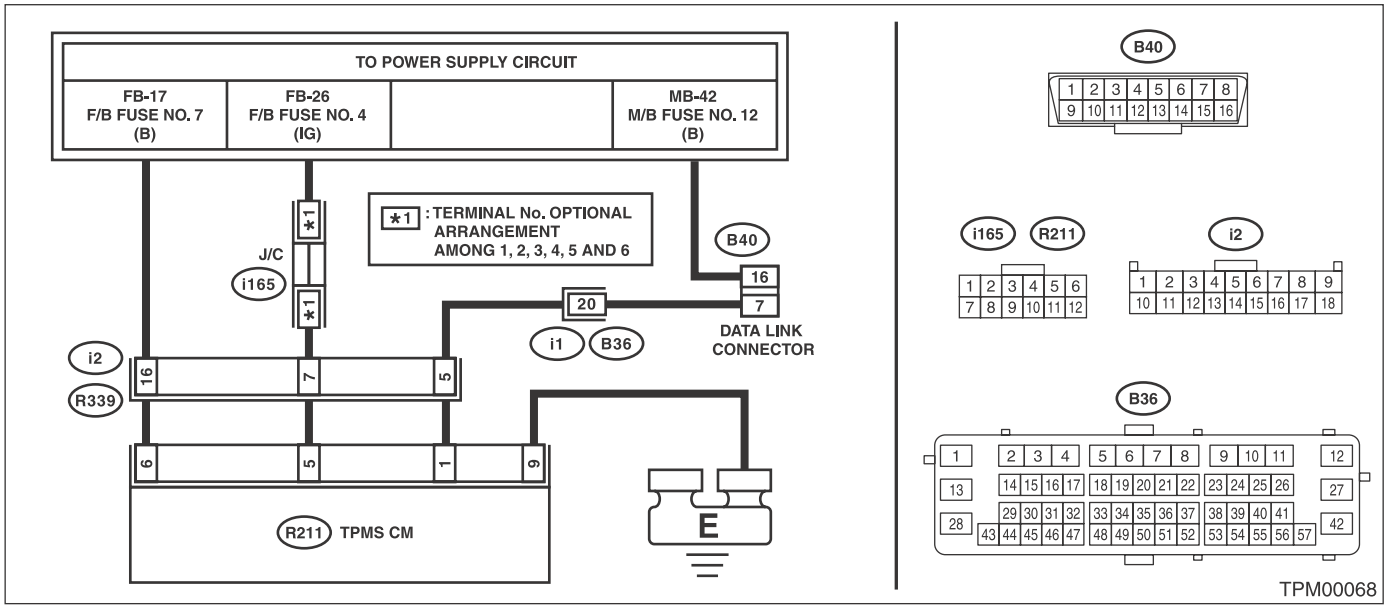

Step		Check	Yes	No
1	**CHECK IGNITION SWITCH.**	Is the ignition switch ON?	Go to step **2**.	Turn the ignition switch to ON, and select TPM mode using Subaru Select Monitor.
2	**CHECK BATTERY.**	Is the voltage 11 V or more?	Go to step **3**.	Charge or replace the battery.
3	**CHECK BATTERY TERMINAL.**	Is there poor contact at battery terminal?	Repair or tighten the battery terminal.	Go to step **4**.
4	**CHECK SUBARU SELECT MONITOR COMMUNICATION.** 1) Turn the ignition switch to ON. 2) Using the Subaru Select Monitor, check whether communication to other systems can be executed normally.	Is the system name displayed on Subaru Select Monitor?	Go to step **8**.	Go to step **5**.
5	**CHECK SUBARU SELECT MONITOR COMMUNICATION.** 1) Turn the ignition switch to OFF. 2) Disconnect the tire inflation pressure monitoring control module connector. 3) Turn the ignition switch to ON. 4) Check whether communication to other systems can be executed normally.	Is the system name displayed on Subaru Select Monitor?	Replace the tire inflation pressure monitoring control module.	Go to step **6**.

	Step	Check	Yes	No
6	**CHECK HARNESS CONNECTOR BETWEEN EACH CONTROL MODULE AND DATA LINK CONNECTOR.** 1) Turn the ignition switch to OFF. 2) Disconnect the tire inflation pressure monitoring control module. 3) Measure the resistance between data link connector and chassis ground. ***Connector & terminal*** ***(B40) No. 7 — Chassis ground:***	Is the resistance 1 MΩ or more?	Go to step **7**.	Repair the harness and connector between each control module and data link connector.
7	**CHECK OUTPUT VOLTAGE FOR TIRE INFLATION PRESSURE MONITORING CONTROL MODULE.** 1) Turn the ignition switch to ON. 2) Measure the voltage between the tire inflation pressure monitoring control module and chassis ground. ***Connector & terminal*** ***(B40) No. 7 (+) — Chassis ground (–):***	Is the voltage less than 1 V?	Go to step **8**.	Repair the harness and connector between each control module and data link connector.
8	**CHECK HARNESS BETWEEN TIRE INFLATION PRESSURE MONITORING CONTROL MODULE AND DATA LINK CONNECTOR.** 1) Turn the ignition switch to OFF. 2) Measure the resistance between the tire inflation pressure monitoring control module and data link connector. ***Connector & terminal*** ***(R211) No. 1 — (B40) No. 7:***	Is the resistance less than 0.5 Ω?	Go to step **9**.	Repair the harness and connectors between the tire inflation pressure monitoring control module and data link connector.
9	**CHECK TIRE INFLATION PRESSURE MONITORING CONTROL MODULE CONNECTOR.**	Is the tire inflation pressure monitoring control module connector inserted to the module until it is locked securely?	Go to step **10**.	Insert the tire inflation pressure monitoring control module connector to the tire inflation pressure monitoring control module.
10	**CHECK POWER SUPPLY CIRCUIT.** 1) Turn the ignition switch to ON. (engine OFF) 2) Measure the ignition power supply voltage between the tire inflation pressure monitoring control module and chassis ground. ***Connector & terminal*** ***(R211) No. 5 (+) — Chassis ground (–):***	Is the voltage 10 — 15 V?	Go to step **11**.	Repair the open circuit of harness between the tire inflation pressure monitoring control module and battery.
11	**CHECK HARNESS BETWEEN TIRE INFLATION PRESSURE MONITORING CONTROL MODULE AND CHASSIS GROUND.** 1) Turn the ignition switch to OFF. 2) Disconnect the connector from the tire inflation pressure monitoring control module. 3) Measure the resistance between the tire inflation pressure monitoring control module and chassis ground. ***Connector & terminal*** ***(R211) No. 9 — Chassis ground:***	Is the resistance less than 0.5 Ω?	Go to step **12**.	Repair the open circuit of harness of the tire inflation pressure monitoring control module.
12	**CHECK POOR CONTACT OF CONNECTOR.**	Is there poor contact of the tire inflation pressure monitoring control module power supply, ground circuit and data link connector?	Repair the connector.	Replace the tire inflation pressure monitoring control module.

6. Read Diagnostic Trouble Code (DTC)

A: OPERATION

For the operation procedure, refer to the “PC application help for Subaru Select Monitor”.

NOTE:
• For details concerning DTCs, refer to List of Diagnostic Trouble Code (DTC). <Ref. to TPM(diag)-23, List of Diagnostic Trouble Code (DTC).>
• All detected DTCs are displayed.
• If a particular DTC is not stored in memory properly at the occurrence of problem (due to a drop in tire inflation pressure monitoring control module power supply etc.), the DTC suffixed with a question mark “?” is displayed on Subaru Select Monitor display screen. This shows it may be an unreliable reading.
• When DTC is not displayed, check the indicator circuit and the communication circuit. <Ref. to TPM(diag)-17, Tire Pressure Warning Light / Trouble Indicator Light Illumination Pattern.>

7. Clear Memory Mode

A: OPERATION

For the operation procedure, refer to the “PC application help for Subaru Select Monitor”.

8. Read Current Data

A: OPERATION

For the operation procedure, refer to the “PC application help for Subaru Select Monitor”.

B: LIST

Display	Contents to be displayed	Unit of measure
Tire 1 FN code	LEARN, LOW BAT, OFF, WAKE, RE ME, NORMAL	LEARN: Transmitted transmitter ID using the transmitter registration tool LOW BAT: Transmitter battery voltage running low OFF: Transmitter function stops (no data transmission) RE ME: Tire air changes ±8.4 kPa WAKE: When data transmission is started from a stopped state. NORMAL: Conditions other than above
Tire 2 FN code		
Tire 3 FN code		
Tire 4 FN code		
Tire 1 air pressure	Value converted to tire pressure from data delivered from transmitter is displayed. (The figure may differ from the actual measured values.)	kPa, psig, mmHg, inHg
Tire 2 air pressure		kPa, psig, mmHg, inHg
Tire 3 air pressure		kPa, psig, mmHg, inHg
Tire 4 air pressure		kPa, psig, mmHg, inHg
Vehicle Speed	Vehicle speed signal which is input in control module	km/h, MPH
Pressure warning	Threshold where tire pressure warning light illuminates	kPa, psig, mmHg, inHg
Return pressure	Threshold where tire pressure warning light goes out	kPa, psig, mmHg, inHg

9. Register Transmitter (ID)

A: OPERATION

Transmitter registration is required in the following cases.

- A transmitter is replaced.
- Tire inflation pressure monitoring control module is replaced.

NOTE:

- If registration of the transmitter ID is not possible after two attempts, replace the tire inflation pressure monitoring control module.
- During the registration, turn the ignition switch to OFF and end the Subaru Select Monitor. Or if the registration is not performed for 5 minutes or more, the registration mode is cancelled.
- When rotating tires, there is no effect on the performance or functions of the tire inflation pressure monitoring control module even if the transmitter (ID) is not registered, however, the tire position displayed on the Subaru Select Monitor will be incorrect.

1) Adjust all tire inflation pressures to the specifications.
2) Connect Subaru Select Monitor and select the {2. Each System Check} on the «Main Menu».
3) On the «System Selection Menu» display, select the {Tire pressure monitor}.
4) After the {Tire pressure monitor} is displayed, select [OK].
5) On the «Tire pressure monitor diagnosis» display, select the {Transmitter ID regist confirm}.
6) {ID registration mode When execute Registered ID is deleted. Continue?} is displayed, select [OK].
7) Touch the transmitter registration tool to the side wall area near the air valve on the front left tire, and press the switch. The transmitter ID is sent to the tire inflation pressure monitoring control module. (At that time, the tire inflation pressure warning light blinks to confirm that the registration has started.)

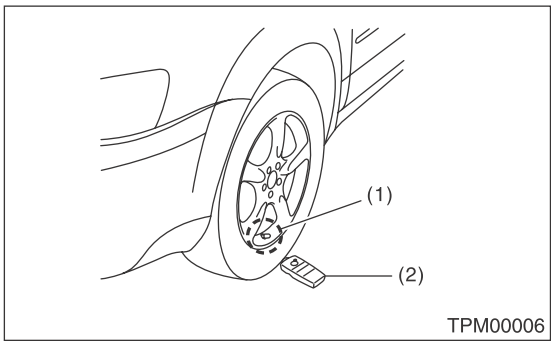

(1) Air valve (transmitter)
(2) Transmitter registration tool

NOTE:

- The registration order of transmitter ID is not specified.
- The transmitter registration tool is used by touching the side wall area near the transmitter.
- When registration of each tire is completed, the hazard light will blink and {ID registration completed} is displayed on the Select Monitor screen.
- If registration procedure stops in the halfway (turning ignition switch to OFF, wrong registration order, etc), proceed from step 5).

8) When ID registration is completed, the tire inflation pressure warning light remains lit for approximately 2 seconds, to end the registration. Switch to the screen displaying the transmitter ID on the Subaru Select Monitor display. <Ref. to TPM(diag)-15, Display Transmitter (ID).>
9) Check the transmitter ID that was registered, then perform a driving test. <Ref. to TPM(diag)-16, Inspection Mode.>

10. Display Transmitter (ID)

A: OPERATION

For the operation procedure, refer to the “PC application help for Subaru Select Monitor”.

11.Inspection Mode

A: PROCEDURE

Reproduce the malfunction occurrence condition as much as possible. Drive the vehicle at 40 km/h (25 MPH) or faster for at least ten minutes.

12. Tire Pressure Warning Light / Trouble Indicator Light Illumination Pattern

A: INSPECTION

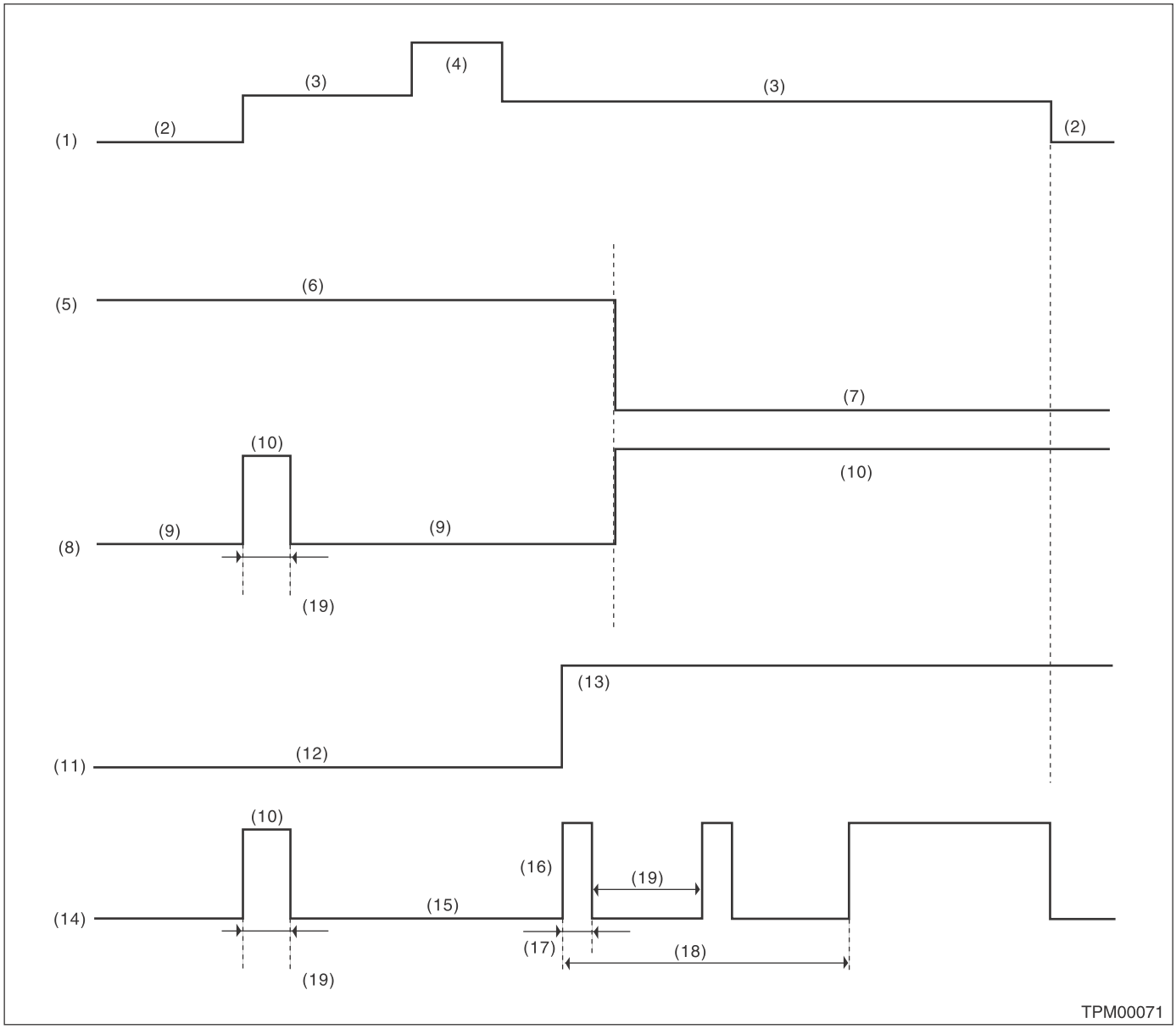

(1)	Ignition switch	(8)	Tire inflation pressure warning light (pressure condition)	(15)	Light OFF
(2)	OFF	(9)	Light OFF	(16)	Blink
(3)	ON	(10)	Light ON	(17)	1 second
(4)	Start	(11)	System condition	(18)	25 blinking
(5)	Tire inflation pressure condition	(12)	Normal operation	(19)	2 seconds
(6)	Within standard value	(13)	Faulty		
(7)	Less than standard value (For the pressure warning level, refer to “CURRENT DATA”.) <Ref. to TPM(diag)-13, LIST, Read Current Data.>	(14)	Tire inflation pressure warning light (system condition)		

1) If the tire inflation pressure warning light does not illuminate in accordance with this illumination pattern, there must be an electrical malfunction.
2) If the tire inflation pressure warning light does not go off, check the tire inflation pressure monitoring control module/warning light circuits and the combination meter circuit. <Ref. to TPM(diag)-20, TIRE PRESSURE WARNING LIGHT DOES NOT COME OFF, Tire Pressure Warning Light / Trouble Indicator Light Illumination Pattern.>

NOTE:
If the problem is fixed while driving at approximately 40 km/h (25 MPH) after the tire inflation pressure warning light blinks/lights, the warning light goes out and the tire inflation pressure monitoring system operates normally. (If there is a decrease in tire inflation pressure, or a malfunction of the system, the malfunction history is displayed.)

B: TIRE PRESSURE WARNING LIGHT DOES NOT COME ON

DETECTING CONDITION:
Defective combination meter

TROUBLE SYMPTOM:
When the ignition switch is turned to ON (engine OFF), the tire inflation pressure warning light does not come on (for approximately 2 seconds).

WIRING DIAGRAM:

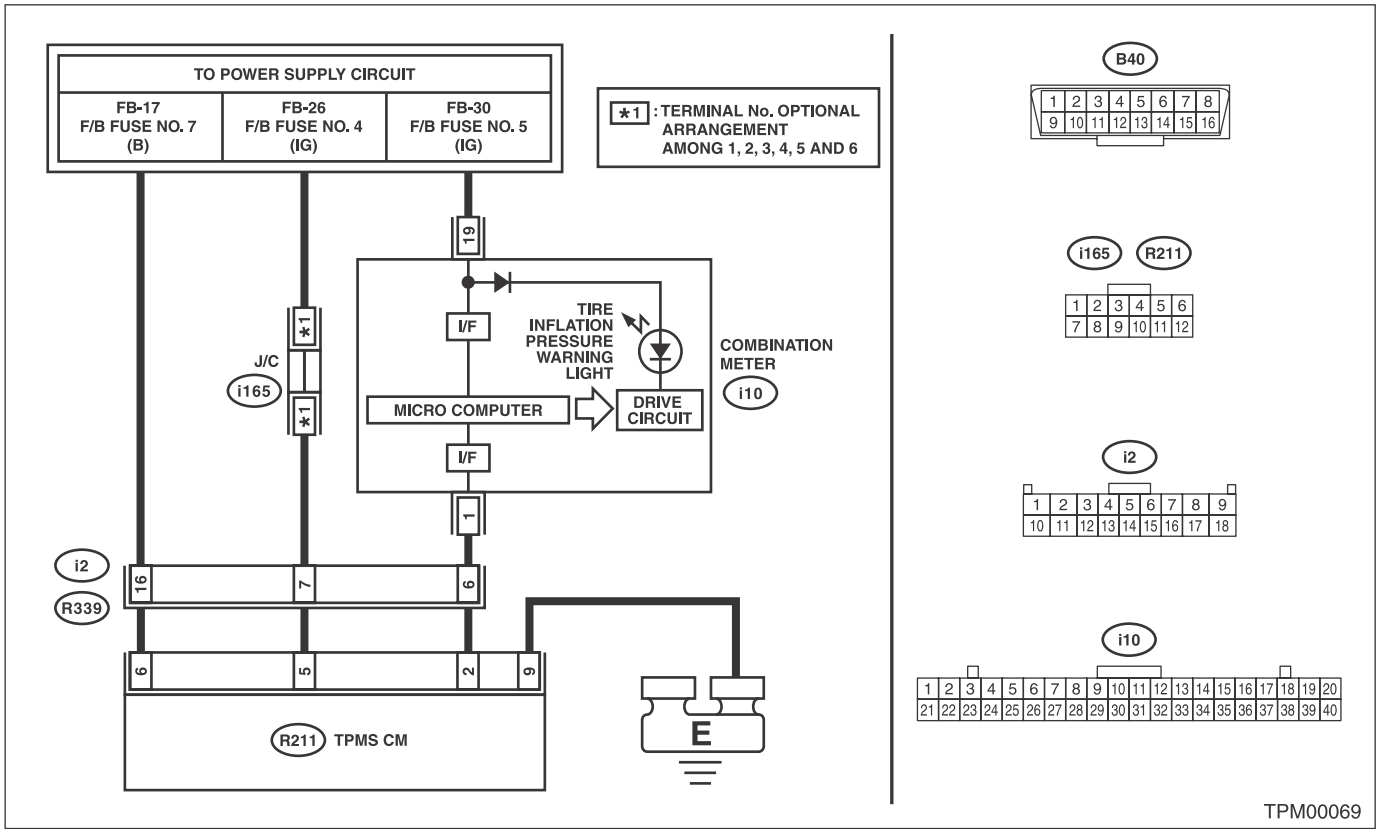

Step		Check	Yes	No
1	**CHECK DIAGNOSTIC TROUBLE CODE (DTC).** Read the DTC by connecting the Subaru Select Monitor. <Ref. to TPM(diag)-11, OPERATION, Read Diagnostic Trouble Code (DTC).>	Is diagnostics code (DTC) displayed?	Perform the diagnosis according to DTC. <Ref. to TPM(diag)-23, List of Diagnostic Trouble Code (DTC).>	Replace the combination meter. <Ref. to IDI-20, REMOVAL, Combination Meter.>

C: TIRE PRESSURE WARNING LIGHT DOES NOT COME OFF

DETECTING CONDITION:

- Defective combination meter
- Tires inflation pressure drop
- Transmitter ID not registered

TROUBLE SYMPTOM:

Tire inflation pressure warning light remains illuminating after engine starts.

WIRING DIAGRAM:

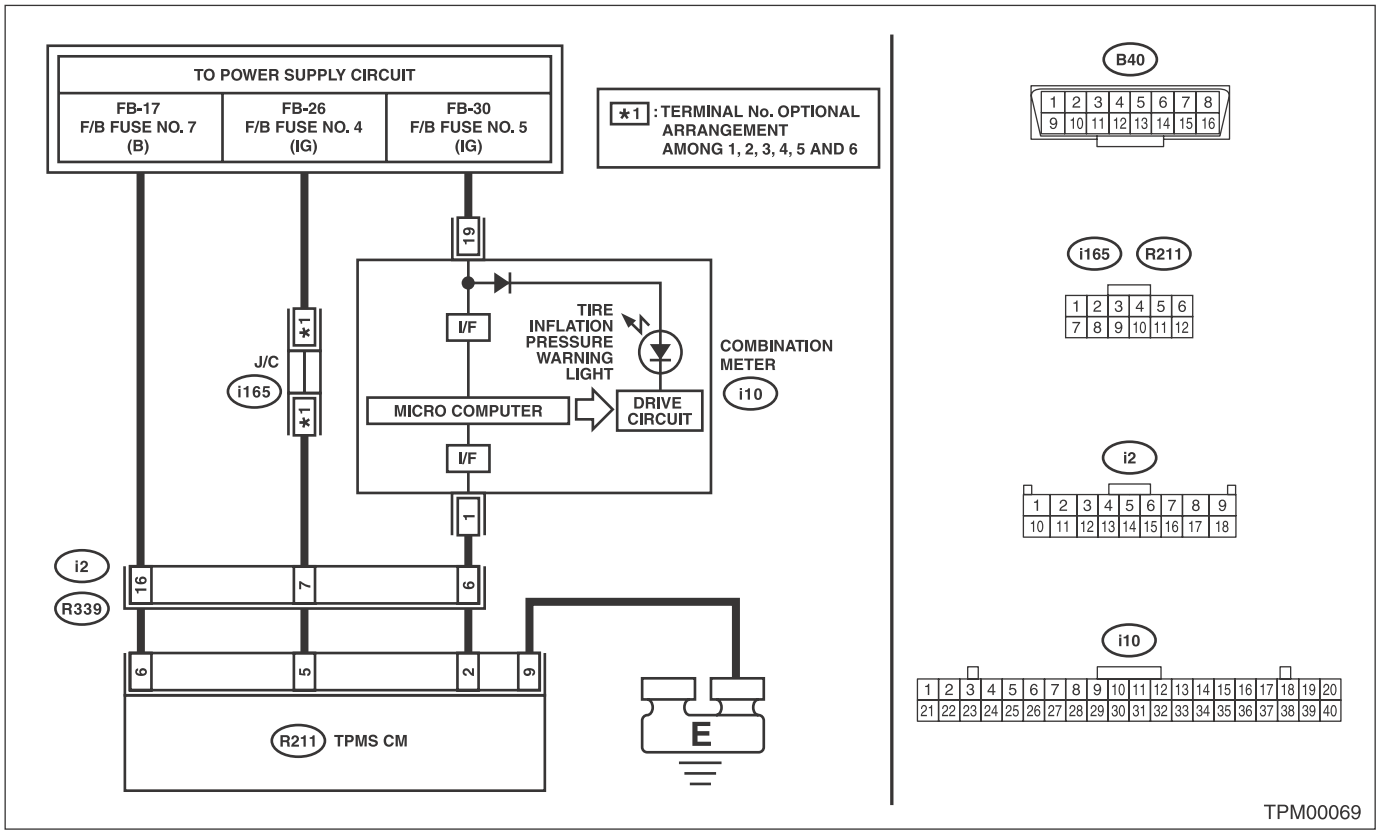

	Step	Check	Yes	No
1	**CHECK DIAGNOSTIC TROUBLE CODE (DTC).** Read the DTC by connecting the Subaru Select Monitor. <Ref. to TPM(diag)-11, OPERATION, Read Diagnostic Trouble Code (DTC).>	Is DTC displayed?	Perform the diagnosis according to DTC. <Ref. to TPM(diag)-23, List of Diagnostic Trouble Code (DTC).>	Go to step **2**.
2	**CHECK TRANSMITTER (ID).** Display the transmitter ID of the tire inflation pressure monitoring system.	Is the transmitter ID registered?	Go to step **3**.	Register the transmitter ID. <Ref. to TPM(diag)-14, OPERATION, Register Transmitter (ID).>
3	**CHECK TRANSMITTER DATA OUTPUT.** 1) Select data display of the tire inflation pressure monitoring. 2) Start the engine and check the tire inflation pressure warning light output.	Is the warning light output ON?	Replace the tire inflation pressure monitoring control module.	Replace the combination meter. <Ref. to IDI-20, REMOVAL, Combination Meter.>

D: TIRE PRESSURE WARNING LIGHT IS 25 TIMES BLINKING AND TURN ON

DETECTING CONDITION:

- Tire inflation pressure monitoring control module is faulty.
- Defective harness
- Transmitter is faulty.

TROUBLE SYMPTOM:

Every time the engine starts, tire inflation pressure warning light blinks 25 times and then illuminates.

WIRING DIAGRAM:

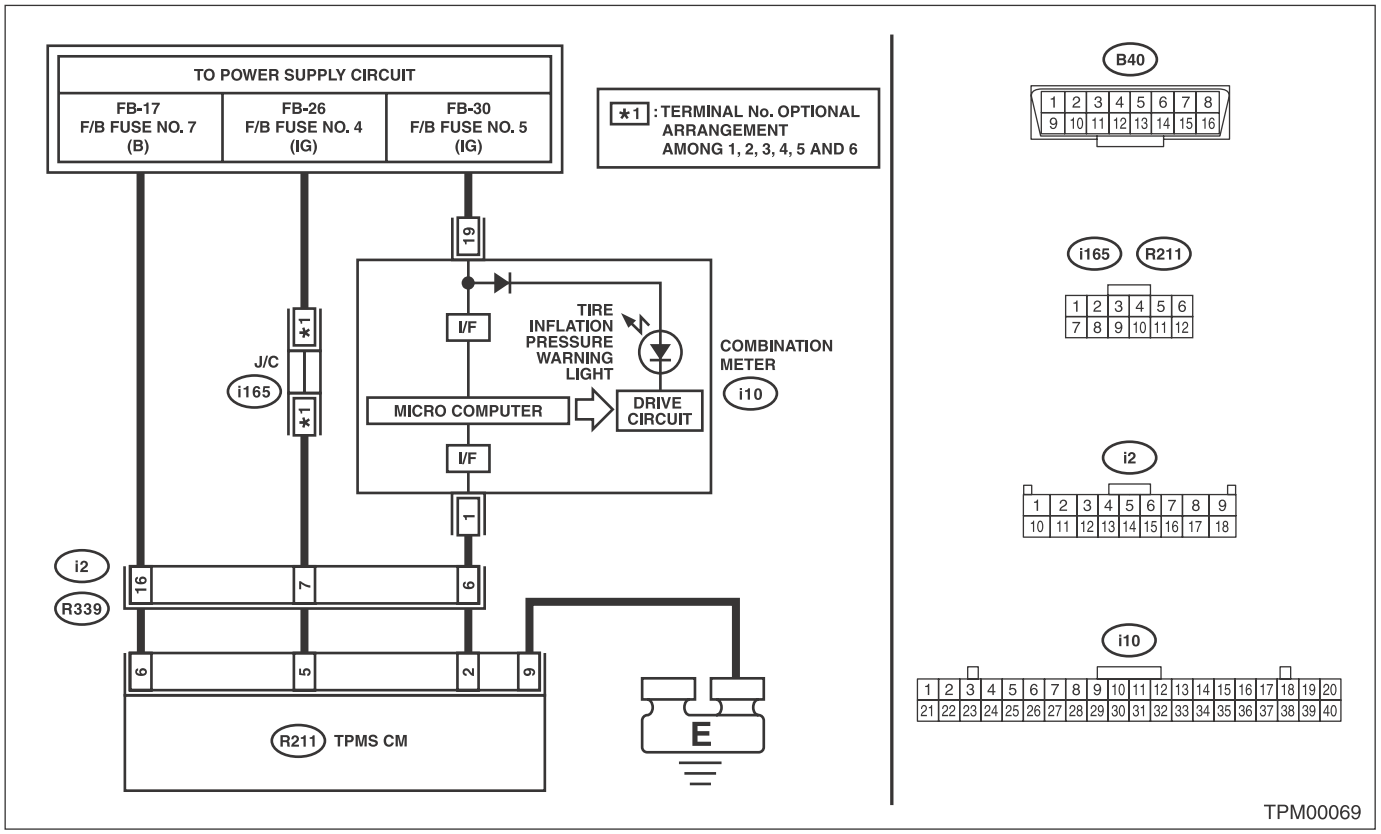

	Step	Check	Yes	No
1	**CHECK DIAGNOSTIC TROUBLE CODE (DTC).** Read the DTC by connecting the Subaru Select Monitor. <Ref. to TPM(diag)-11, OPERATION, Read Diagnostic Trouble Code (DTC).>	Is diagnostics code (DTC) displayed?	Perform the diagnosis according to DTC. <Ref. to TPM(diag)-23, List of Diagnostic Trouble Code (DTC).>	Go to step **2**.
2	**CHECK HARNESS.** 1) Connect the Subaru Select Monitor to the terminal No. 2 of the tire inflation pressure monitoring control module connector (R211). ***Connector & terminal*** ***(R211) No. 2 (+) — Chassis ground (–):*** 2) Turn the ignition switch to ON, and select "Oscilloscope" from the Main Menu of Subaru Select Monitor. 3) Check the voltage displayed.	Is the voltage 10 V or more?	Go to step **3**.	Go to step **4**.

Step	Check	Yes	No
3 **CHECK HARNESS.** 1) Check the output waveform displayed in the oscilloscope of Subaru Select Monitor. 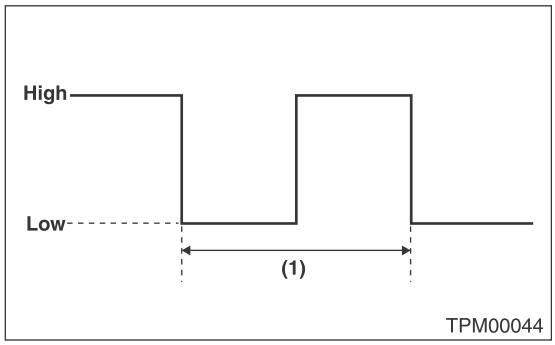	Is the pattern the same output waveform as shown in the figure? (1) 400±20 ms Duty 50 % High: Battery voltage Low: 1.5 V or less	Check the combination meter.	Replace the tire inflation pressure monitoring control module.
4 **CHECK HARNESS.** 1) Disconnect the tire inflation pressure monitoring control module connector. 2) Connect the Subaru Select Monitor to the terminal No. 2 of the tire inflation pressure monitoring control module connector (R211). ***Connector & terminal*** ***(R211) No. 2 (+) — Chassis ground (−):*** 3) Turn the ignition switch to ON, and select "Oscilloscope" from the Main Menu of Subaru Select Monitor. 4) Check the voltage displayed.	Is the voltage 10 V or more?	Replace the tire inflation pressure monitoring control module.	The harness between the combination meter connector and the tire inflation pressure monitoring control module connector is shorted or open. Repair or replace the harness.

13.List of Diagnostic Trouble Code (DTC)

A: LIST

DTC	Item	Contents of diagnosis	Remarks
11	Tire 1 Air Pressure Decrease	Tire pressure of tire 1 is reduced.	<Ref. to TPM(diag)-25, DTC 11 TIRE 1 AIR PRESSURE DECREASE, Diagnostic Procedure with Diagnostic Trouble Code (DTC).>
12	Tire 2 Air Pressure Decrease	Tire pressure of tire 2 is reduced.	<Ref. to TPM(diag)-25, DTC 12 TIRE 2 AIR PRESSURE DECREASE, Diagnostic Procedure with Diagnostic Trouble Code (DTC).>
13	Tire 3 Air Pressure Decrease	Tire pressure of tire 3 is reduced.	<Ref. to TPM(diag)-25, DTC 13 TIRE 3 AIR PRESSURE DECREASE, Diagnostic Procedure with Diagnostic Trouble Code (DTC).>
14	Tire 4 Air Pressure Decrease	Tire pressure of tire 4 is reduced.	<Ref. to TPM(diag)-26, DTC 14 TIRE 4 AIR PRESSURE DECREASE, Diagnostic Procedure with Diagnostic Trouble Code (DTC).>
21	Transmitter 1 No Data	Data cannot be received from transmitter 1.	<Ref. to TPM(diag)-26, DTC 21 TRANSMITTER 1 NO DATA, Diagnostic Procedure with Diagnostic Trouble Code (DTC).>
22	Transmitter 2 No Data	Data cannot be received from transmitter 2.	<Ref. to TPM(diag)-26, DTC 22 TRANSMITTER 2 NO DATA, Diagnostic Procedure with Diagnostic Trouble Code (DTC).>
23	Transmitter 3 No Data	Data cannot be received from transmitter 3.	<Ref. to TPM(diag)-26, DTC 23 TRANSMITTER 3 NO DATA, Diagnostic Procedure with Diagnostic Trouble Code (DTC).>
24	Transmitter 4 No Data	Data cannot be received from transmitter 4.	<Ref. to TPM(diag)-27, DTC 24 TRANSMITTER 4 NO DATA, Diagnostic Procedure with Diagnostic Trouble Code (DTC).>
31	Transmitter 1 Pressure Data Abnormal	Transmitter 1 data contents are abnormal.	<Ref. to TPM(diag)-28, DTC 31 TRANSMITTER 1 PRESSURE DATA ABNORMAL, Diagnostic Procedure with Diagnostic Trouble Code (DTC).>
32	Transmitter 2 Pressure Data Abnormal	Transmitter 2 data contents are abnormal.	<Ref. to TPM(diag)-28, DTC 32 TRANSMITTER 2 PRESSURE DATA ABNORMAL, Diagnostic Procedure with Diagnostic Trouble Code (DTC).>
33	Transmitter 3 Pressure Data Abnormal	Transmitter 3 data contents are abnormal.	<Ref. to TPM(diag)-28, DTC 33 TRANSMITTER 3 PRESSURE DATA ABNORMAL, Diagnostic Procedure with Diagnostic Trouble Code (DTC).>
34	Transmitter 4 Pressure Data Abnormal	Transmitter 4 data contents are abnormal.	<Ref. to TPM(diag)-29, DTC 34 TRANSMITTER 4 PRESSURE DATA ABNORMAL, Diagnostic Procedure with Diagnostic Trouble Code (DTC).>
41	Transmitter 1 Function Code Abnormal	Function code has error.	<Ref. to TPM(diag)-30, DTC 41 TRANSMITTER 1 FUNCTION CODE ABNORMAL, Diagnostic Procedure with Diagnostic Trouble Code (DTC).>

DTC	Item	Contents of diagnosis	Remarks
42	Transmitter 2 Function Code Abnormal	Function code has error.	<Ref. to TPM(diag)-30, DTC 42 TRANSMITTER 2 FUNCTION CODE ABNORMAL, Diagnostic Procedure with Diagnostic Trouble Code (DTC).>
43	Transmitter 3 Function Code Abnormal	Function code has error.	<Ref. to TPM(diag)-30, DTC 43 TRANSMITTER 3 FUNCTION CODE ABNORMAL, Diagnostic Procedure with Diagnostic Trouble Code (DTC).>
44	Transmitter 4 Function Code Abnormal	Function code has error.	<Ref. to TPM(diag)-31, DTC 44 TRANSMITTER 4 FUNCTION CODE ABNORMAL, Diagnostic Procedure with Diagnostic Trouble Code (DTC).>
51	Transmitter 1 Battery Voltage Decrease	Transmitter battery voltage is low.	<Ref. to TPM(diag)-32, DTC 51 TRANSMITTER 1 BATTERY VOLTAGE DECREASE, Diagnostic Procedure with Diagnostic Trouble Code (DTC).>
52	Transmitter 2 Battery Voltage Decrease	Transmitter battery voltage is low.	<Ref. to TPM(diag)-32, DTC 52 TRANSMITTER 2 BATTERY VOLTAGE DECREASE, Diagnostic Procedure with Diagnostic Trouble Code (DTC).>
53	Transmitter 3 Battery Voltage Decrease	Transmitter battery voltage is low.	<Ref. to TPM(diag)-32, DTC 53 TRANSMITTER 3 BATTERY VOLTAGE DECREASE, Diagnostic Procedure with Diagnostic Trouble Code (DTC).>
54	Transmitter 4 Battery Voltage Decrease	Transmitter battery voltage is low.	<Ref. to TPM(diag)-32, DTC 54 TRANSMITTER 4 BATTERY VOLTAGE DECREASE, Diagnostic Procedure with Diagnostic Trouble Code (DTC).>
61	Vehicle Speed is Abnormal	Vehicle speed signal is not input to the control module when the vehicle speed is 6 km/h (3.7 MPH) or more.	<Ref. to TPM(diag)-33, DTC 61 VEHICLE SPEED IS ABNORMAL, Diagnostic Procedure with Diagnostic Trouble Code (DTC).>

14.Diagnostic Procedure with Diagnostic Trouble Code (DTC)

A: DTC 11 TIRE 1 AIR PRESSURE DECREASE

NOTE:
Refer to DTC 14 for diagnostic procedure. <Ref. to TPM(diag)-26, DTC 14 TIRE 4 AIR PRESSURE DECREASE, Diagnostic Procedure with Diagnostic Trouble Code (DTC).>

B: DTC 12 TIRE 2 AIR PRESSURE DECREASE

NOTE:
Refer to DTC 14 for diagnostic procedure. <Ref. to TPM(diag)-26, DTC 14 TIRE 4 AIR PRESSURE DECREASE, Diagnostic Procedure with Diagnostic Trouble Code (DTC).>

C: DTC 13 TIRE 3 AIR PRESSURE DECREASE

NOTE:
Refer to DTC 14 for diagnostic procedure. <Ref. to TPM(diag)-26, DTC 14 TIRE 4 AIR PRESSURE DECREASE, Diagnostic Procedure with Diagnostic Trouble Code (DTC).>

D: DTC 14 TIRE 4 AIR PRESSURE DECREASE

DTC DETECTING CONDITION:
Inflation pressure of tires dropped below the specified value.

NOTE:
For the specifications, refer to “CURRENT DATA”. <Ref. to TPM(diag)-13, LIST, Read Current Data.>
TROUBLE SYMPTOM:
Tire inflation pressure warning light illuminates.

	Step	Check	Yes	No
1	**CHECK TIRES.** Lift up the vehicle and check for damage in the tires.	Are there cracks or damage?	Replace the tire.	Go to step **2**.
2	**CHECK TIRES.** Check the tire inflation pressure.	Is the tire inflation pressure within the specified value?	Go to step **3**.	Adjust the tire inflation pressure.
3	**CHECK TRANSMITTER.** Drive the vehicle at 40 km/h (25 MPH) or faster and compare the data from the transmitters on the four wheels.	Is there a transmitter with different data?	Replace the transmitter (tire inflation pressure sensor).	Go to step **4**.
4	**PERFORM DRIVING TEST.** 1) Perform the Clear Memory Mode. <Ref. to TPM(diag)-12, OPERATION, Clear Memory Mode.> 2) Perform the driving test. <Ref. to TPM(diag)-16, PROCEDURE, Inspection Mode.> 3) Read diagnostic trouble code (DTC). <Ref. to TPM(diag)-11, OPERATION, Read Diagnostic Trouble Code (DTC).>	Is DTC displayed?	Inspect using “Diagnostic Procedure with Diagnostic Trouble Code (DTC)”. <Ref. to TPM(diag)-25, Diagnostic Procedure with Diagnostic Trouble Code (DTC).>	Finish the diagnosis.

CAUTION:
When driving vehicle to perform driving test, there should be always 2 persons (driver and checker) to check.

E: DTC 21 TRANSMITTER 1 NO DATA

NOTE:
Refer to DTC 24 for diagnostic procedure. <Ref. to TPM(diag)-27, DTC 24 TRANSMITTER 4 NO DATA, Diagnostic Procedure with Diagnostic Trouble Code (DTC).>

F: DTC 22 TRANSMITTER 2 NO DATA

NOTE:
Refer to DTC 24 for diagnostic procedure. <Ref. to TPM(diag)-27, DTC 24 TRANSMITTER 4 NO DATA, Diagnostic Procedure with Diagnostic Trouble Code (DTC).>

G: DTC 23 TRANSMITTER 3 NO DATA

NOTE:
Refer to DTC 24 for diagnostic procedure. <Ref. to TPM(diag)-27, DTC 24 TRANSMITTER 4 NO DATA, Diagnostic Procedure with Diagnostic Trouble Code (DTC).>

H: DTC 24 TRANSMITTER 4 NO DATA

DTC DETECTING CONDITION:
Data from transmitters cannot be received for 8 minutes
TROUBLE SYMPTOM:
Tire inflation pressure warning light blinks 25 times and then illuminates.

	Step	Check	Yes	No
1	**START FL TRANSMITTER.** 1) Connect the Subaru Select Monitor and then turn the ignition switch to ON. 2) Select “Transmitter ID display”. <Ref. to TPM(diag)-15, OPERATION, Display Transmitter (ID).> 3) Use the transmitter registration tool and transmit the ID from the FL transmitter to check “Latest reception ID”.	Is “Latest reception ID” updated?	Go to step **2**.	Replace front left transmitter.
2	**CHECK FL TRANSMITTER ID.** Check the ID displayed in the updated ID display and the tire 1 registered ID.	Are the two IDs same?	Go to step **3**.	Record the received ID update as the FL transmitter. Go to step **3**.
3	**START FR TRANSMITTER.** Use the transmitter registration tool and transmit the ID from the FR transmitter to check “Latest reception ID”.	Is “Latest reception ID” updated?	Go to step **4**.	Replace front right transmitter.
4	**CHECK FR TRANSMITTER ID.** Check the ID displayed in the updated ID display and the tire 2 registered ID.	Are the two IDs same?	Go to step **5**.	Record the received ID update as the FR transmitter. Go to step **5**.
5	**START RR TRANSMITTER.** Use the transmitter registration tool and transmit the ID from the RR transmitter to check “Latest reception ID”.	Is “Latest reception ID” updated?	Go to step **6**.	Replace RR transmitter.
6	**CHECK RR TRANSMITTER ID.** Check the ID displayed in the updated ID display and the tire 3 registered ID.	Are the two IDs same?	Go to step **7**.	Record the received ID update as the RR transmitter. Go to step **7**.
7	**START RL TRANSMITTER.** Use the transmitter registration tool and transmit the ID from the RL transmitter to check “Latest reception ID”.	Is “Latest reception ID” updated?	Go to step **8**.	Replace RL transmitter.
8	**CHECK RL TRANSMITTER ID.** Check the ID displayed in the updated ID display and the tire 4 registered ID.	Are the two IDs same?	Go to step **9**.	Record the received ID update as the RL transmitter. Go to step **9**.
9	**CHECK MALFUNCTION TRANSMITTER.**	Is ID recorded by this procedure?	Go to step **10**.	Go to step **1**.
10	**CHECK MALFUNCTION TRANSMITTER.** Check the registered ID of the transmitter indicated by diagnostic trouble code (DTC).	Is the checked ID included in the record?	Replace the transmitter of the recorded position.	Replace the transmitter showing the latest ID that is not included in the registered IDs.

CAUTION:
When driving vehicle to perform driving test, there should be always 2 persons (driver and checker) to check.

I: DTC 31 TRANSMITTER 1 PRESSURE DATA ABNORMAL

NOTE:
Refer to DTC 34 for diagnostic procedure. <Ref. to TPM(diag)-29, DTC 34 TRANSMITTER 4 PRESSURE DATA ABNORMAL, Diagnostic Procedure with Diagnostic Trouble Code (DTC).>

J: DTC 32 TRANSMITTER 2 PRESSURE DATA ABNORMAL

NOTE:
Refer to DTC 34 for diagnostic procedure. <Ref. to TPM(diag)-29, DTC 34 TRANSMITTER 4 PRESSURE DATA ABNORMAL, Diagnostic Procedure with Diagnostic Trouble Code (DTC).>

K: DTC 33 TRANSMITTER 3 PRESSURE DATA ABNORMAL

NOTE:
Refer to DTC 34 for diagnostic procedure. <Ref. to TPM(diag)-29, DTC 34 TRANSMITTER 4 PRESSURE DATA ABNORMAL, Diagnostic Procedure with Diagnostic Trouble Code (DTC).>

L: DTC 34 TRANSMITTER 4 PRESSURE DATA ABNORMAL

DTC DETECTING CONDITION:

- When comparing the data from each transmitter with the previous data, the change is large.
- The pressure exceeds what the transmitter can measure. (Excessive pressure)

TROUBLE SYMPTOM:

Tire inflation pressure warning light blinks 25 times and then illuminates.

	Step	Check	Yes	No
1	**START FL TRANSMITTER.** 1) Connect the Subaru Select Monitor and then turn the ignition switch to ON. 2) Select “Transmitter ID display”. <Ref. to TPM(diag)-15, OPERATION, Display Transmitter (ID).> 3) Use the transmitter registration tool and transmit the ID from the FL transmitter to check “Latest reception ID”.	Is “Latest reception ID” updated?	Go to step **2**.	Replace front left transmitter.
2	**CHECK FL TRANSMITTER ID.** Check the ID displayed in the updated ID display and the tire 1 registered ID.	Are the two IDs same?	Go to step **3**.	Record the received ID update as the FL transmitter. Go to step **3**.
3	**START FR TRANSMITTER.** Use the transmitter registration tool and transmit the ID from the FR transmitter to check “Latest reception ID”.	Is “Latest reception ID” updated?	Go to step **4**.	Replace front right transmitter.
4	**CHECK FR TRANSMITTER ID.** Check the ID displayed in the updated ID display and the tire 2 registered ID.	Are the two IDs same?	Go to step **5**.	Record the received ID update as the FR transmitter. Go to step **5**.
5	**START RR TRANSMITTER.** Use the transmitter registration tool and transmit the ID from the RR transmitter to check “Latest reception ID”.	Is “Latest reception ID” updated?	Go to step **6**.	Replace RR transmitter.
6	**CHECK RR TRANSMITTER ID.** Check the ID displayed in the updated ID display and the tire 3 registered ID.	Are the two IDs same?	Go to step **7**.	Record the received ID update as the RR transmitter. Go to step **7**.
7	**START RL TRANSMITTER.** Use the transmitter registration tool and transmit the ID from the RL transmitter to check “Latest reception ID”.	Is “Latest reception ID” updated?	Go to step **8**.	Replace RL transmitter.
8	**CHECK RL TRANSMITTER ID.** Check the ID displayed in the updated ID display and the tire 4 registered ID.	Are the two IDs same?	Go to step **9**.	Record the received ID update as the RL transmitter. Go to step **9**.
9	**CHECK MALFUNCTION TRANSMITTER.**	Is ID recorded by this procedure?	Go to step **10**.	Go to step **1**.
10	**CHECK MALFUNCTION TRANSMITTER.** Check the registered ID of the transmitter indicated by diagnostic trouble code (DTC).	Is the checked ID included in the record?	Replace the transmitter of the recorded position.	Replace the transmitter showing the latest ID that is not included in the registered IDs.

M: DTC 41 TRANSMITTER 1 FUNCTION CODE ABNORMAL

NOTE:
Refer to DTC 44 for diagnostic procedure. <Ref. to TPM(diag)-31, DTC 44 TRANSMITTER 4 FUNCTION CODE ABNORMAL, Diagnostic Procedure with Diagnostic Trouble Code (DTC).>

N: DTC 42 TRANSMITTER 2 FUNCTION CODE ABNORMAL

NOTE:
Refer to DTC 44 for diagnostic procedure. <Ref. to TPM(diag)-31, DTC 44 TRANSMITTER 4 FUNCTION CODE ABNORMAL, Diagnostic Procedure with Diagnostic Trouble Code (DTC).>

O: DTC 43 TRANSMITTER 3 FUNCTION CODE ABNORMAL

NOTE:
Refer to DTC 44 for diagnostic procedure. <Ref. to TPM(diag)-31, DTC 44 TRANSMITTER 4 FUNCTION CODE ABNORMAL, Diagnostic Procedure with Diagnostic Trouble Code (DTC).>

P: DTC 44 TRANSMITTER 4 FUNCTION CODE ABNORMAL

DTC DETECTING CONDITION:
Unexpected function codes received from each transmitter.
TROUBLE SYMPTOM:
Tire inflation pressure warning light blinks 25 times and then illuminates.

	Step	Check	Yes	No
1	**START FL TRANSMITTER.** 1) Connect the Subaru Select Monitor and then turn the ignition switch to ON. 2) Select “Transmitter ID display”. <Ref. to TPM(diag)-15, OPERATION, Display Transmitter (ID).> 3) Use the transmitter registration tool and transmit the ID from the FL transmitter to check “Latest reception ID”.	Is “Latest reception ID” updated?	Go to step **2**.	Replace front left transmitter.
2	**CHECK FL TRANSMITTER ID.** Check the ID displayed in the updated ID display and the tire 1 registered ID.	Are the two IDs same?	Go to step **3**.	Record the received ID update as the FL transmitter. Go to step **3**.
3	**START FR TRANSMITTER.** Use the transmitter registration tool and transmit the ID from the FR transmitter to check “Latest reception ID”.	Is “Latest reception ID” updated?	Go to step **4**.	Replace front right transmitter.
4	**CHECK FR TRANSMITTER ID.** Check the ID displayed in the updated ID display and the tire 2 registered ID.	Are the two IDs same?	Go to step **5**.	Record the received ID update as the FR transmitter. Go to step **5**.
5	**START RR TRANSMITTER.** Use the transmitter registration tool and transmit the ID from the RR transmitter to check “Latest reception ID”.	Is “Latest reception ID” updated?	Go to step **6**.	Replace RR transmitter.
6	**CHECK RR TRANSMITTER ID.** Check the ID displayed in the updated ID display and the tire 3 registered ID.	Are the two IDs same?	Go to step **7**.	Record the received ID update as the RR transmitter. Go to step **7**.
7	**START RL TRANSMITTER.** Use the transmitter registration tool and transmit the ID from the RL transmitter to check “Latest reception ID”.	Is “Latest reception ID” updated?	Go to step **8**.	Replace RL transmitter.
8	**CHECK RL TRANSMITTER ID.** Check the ID displayed in the updated ID display and the tire 4 registered ID.	Are the two IDs same?	Go to step **9**.	Record the received ID update as the RL transmitter. Go to step **9**.
9	**CHECK MALFUNCTION TRANSMITTER.**	Is ID recorded by this procedure?	Go to step **10**.	Replace the transmitter indicated by diagnostics trouble code (DTC).
10	**CHECK MALFUNCTION TRANSMITTER.** Check the registered ID of the transmitter indicated by diagnostic trouble code (DTC).	Is the checked ID included in the record?	Replace the transmitter of the recorded position.	Replace the transmitter indicated by diagnostics trouble code (DTC).

Q: DTC 51 TRANSMITTER 1 BATTERY VOLTAGE DECREASE

NOTE:
Refer to DTC 54 for diagnostic procedure. <Ref. to TPM(diag)-32, DTC 54 TRANSMITTER 4 BATTERY VOLTAGE DECREASE, Diagnostic Procedure with Diagnostic Trouble Code (DTC).>

R: DTC 52 TRANSMITTER 2 BATTERY VOLTAGE DECREASE

NOTE:
Refer to DTC 54 for diagnostic procedure. <Ref. to TPM(diag)-32, DTC 54 TRANSMITTER 4 BATTERY VOLTAGE DECREASE, Diagnostic Procedure with Diagnostic Trouble Code (DTC).>

S: DTC 53 TRANSMITTER 3 BATTERY VOLTAGE DECREASE

NOTE:
Refer to DTC 54 for diagnostic procedure. <Ref. to TPM(diag)-32, DTC 54 TRANSMITTER 4 BATTERY VOLTAGE DECREASE, Diagnostic Procedure with Diagnostic Trouble Code (DTC).>

T: DTC 54 TRANSMITTER 4 BATTERY VOLTAGE DECREASE

DTC DETECTING CONDITION:
Received low battery signals 20 times from each transmitter.
TROUBLE SYMPTOM:
Tire inflation pressure warning light blinks 25 times and then illuminates.

	Step	Check	Yes	No
1	**CHECK TRANSMITTER.** 1) Replace all transmitters with new parts and register their IDs. <Ref. to TPM(diag)-14, OPERATION, Register Transmitter (ID).> 2) Perform the Clear Memory Mode, and perform driving test.	Is the fault eliminated?	Internal battery of the transmitter had worn out.	Replace the tire inflation pressure monitoring control module.

U: DTC 61 VEHICLE SPEED IS ABNORMAL

DTC DETECTING CONDITION:
Vehicle speed function codes were received from the transmitter, but the vehicle speed signal was not input to the module.

TROUBLE SYMPTOM:
Tire inflation pressure warning light blinks 25 times and then illuminates.

WIRING DIAGRAM:

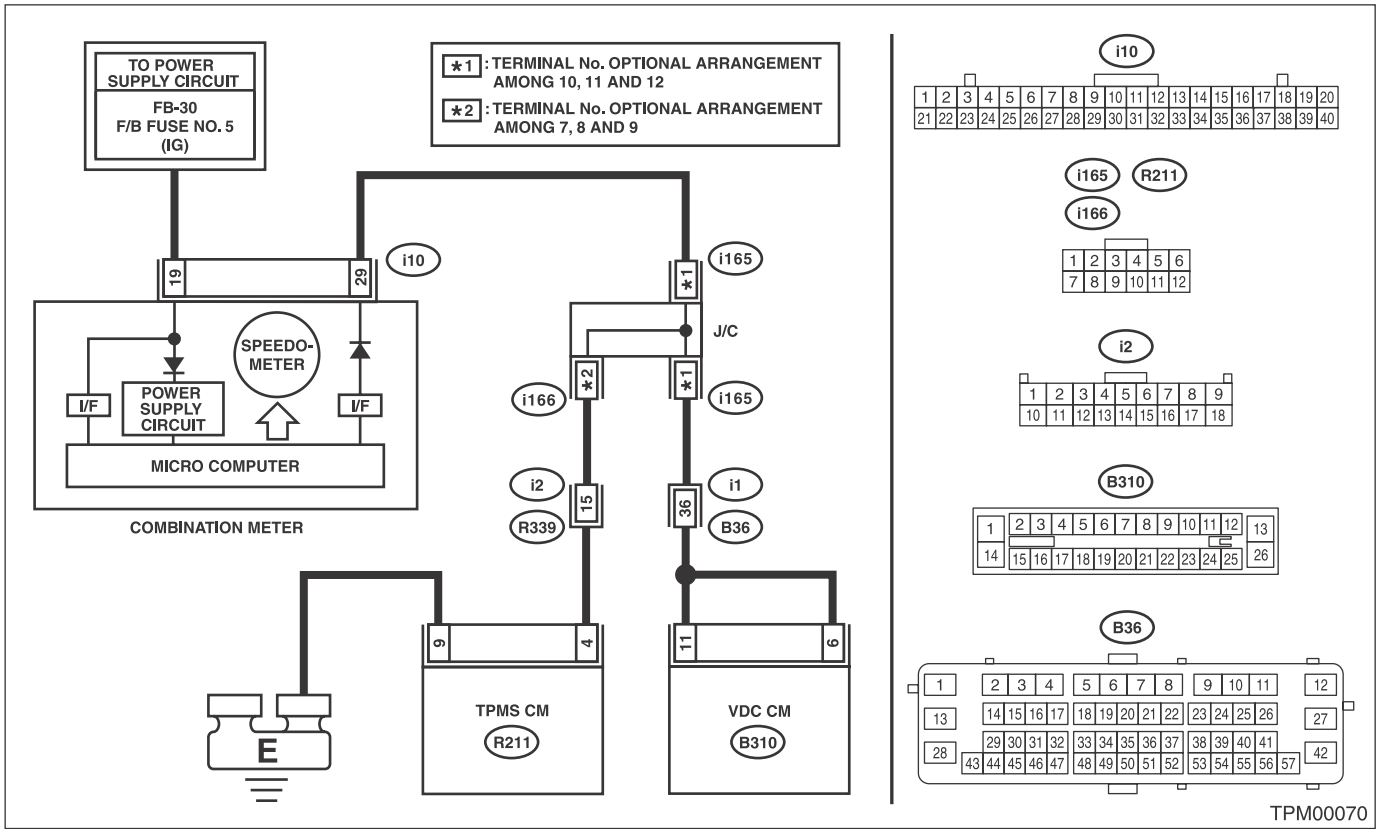

Step		Check	Yes	No
1	**CHECK TIRE INFLATION PRESSURE MONITORING CONTROL MODULE.** 1) Connect an oscilloscope to the terminal No. 4 of the tire inflation pressure monitoring control module connector (R211). 2) Lift up the vehicle and check the vehicle speed signal when the vehicle runs at 40 km/h (25 MPH).	Is the vehicle speed being input?	Replace the tire inflation pressure monitoring control module.	Go to step **2**.
2	**CHECK HARNESS.** 1) Disconnect the combination meter connector (i10). 2) Connect a circuit tester to the tire inflation pressure monitoring control module connector (R211) and combination meter connector (i10), and measure the resistance. ***Connector & terminal*** ***(R211) No. 4 — (i10) No. 29:***	Is the resistance less than 0.5 Ω?	Check the combination meter. <Ref. to IDI-20, REMOVAL, Combination Meter.>	Repair or replace the open circuit of the harness.

15.General Diagnostic Table

A: INSPECTION

Symptoms		Problem parts
Tire pressure warning light illuminates.	Tire pressure is reduced.	• Improper tire pressure adjustment. • Punctured tire
Tire pressure warning light blinks 25 times and then illuminates.	Tire pressure monitoring system has malfunction.	• Air pressure sensor malfunction • Air pressure sensor is out of battery. • Tire pressure monitoring control module is faulty. • Defective vehicle harness • Defective combination meter
Tire pressure is dropping but the warning light does not illuminate.	Tire pressure warning light does not illuminate.	• Air pressure sensor is faulty. • Tire pressure monitoring control module is faulty. • Defective combination meter

DIFFERENTIALS

DI

		Page
1.	General Description	2
2.	Differential Gear Oil	23
3.	Front Differential Assembly	25
4.	Rear Differential (T-type)	26
5.	Rear Differential (VA-type)	45
6.	Rear Differential Front Oil Seal	72
7.	Rear Differential Side Oil Seal	74
8.	Rear Differential Front Member	75
9.	Rear Differential Mount Bushing	76
10.	Rear Differential Inspection Mode	78
11.	General Diagnostic Table	80

1. General Description

A: SPECIFICATION

1. REAR DIFFERENTIAL

When replacing a rear differential assembly, select the correct one according to the following table.

NOTE:
Using a different rear differential assembly will cause the drive train and tires to drag or emit abnormal noise.

Model	Sedan				OUTBACK		
	2.5L SOHC		2.5 L DOHC turbo	3.6 L	2.5L SOHC		3.6 L
	CVT	6MT	6MT	5AT	CVT	6MT	5AT
Rear differential type	VA1-type	T-type	T-type	VA2-type	T-type	T-type	VA2-type
Identification	XD	T2	B1	XC	B2	TP	XC
LSD type	—						
Type of gear	Hypoid gear						
Gear ratio (Number of gear teeth)	3.700 (37/10)	4.111 (37/9)	4.111 (37/9)	3.083 (37/12)	3.900 (39/10)	4.444 (40/9)	3.083 (37/12)
Oil capacity	0.8 ℓ (0.8 US qt, 0.7 Imp qt)						
Rear differential gear oil	GL–5 (75W–90)						

2. IDENTIFICATION

Identification positions are shown in the following figures. For details concerning identification, refer to the “ID” section.

- T-type

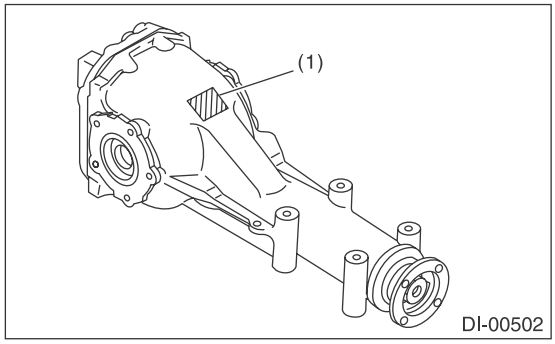

(1) Identification

- VA1-type

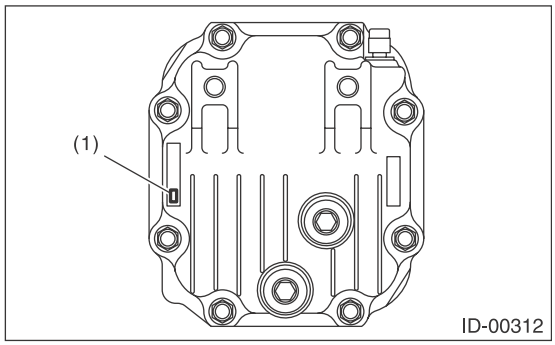

(1) Identification

- VA2-type

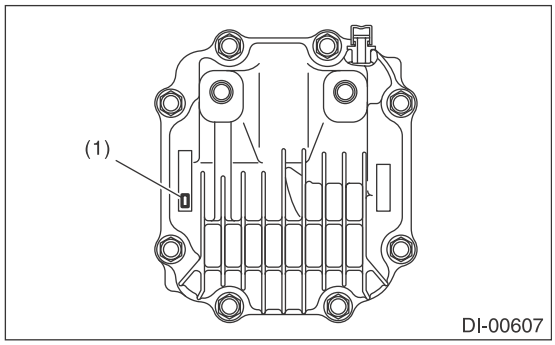

(1) Identification

3. REAR DIFFERENTIAL GEAR OIL

Recommended gear oil:
GL–5 (75W–90)

CAUTION:
Each oil manufacturer has its base oil and additives. Thus, do not mix two or more brands.

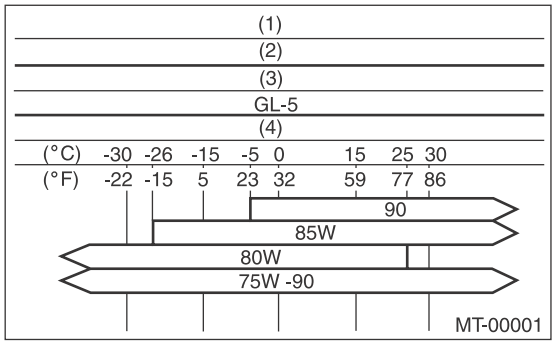

(1) Item
(2) Rear differential gear oil
(3) API classification
(4) SAE viscosity No. and applicable temperature

4. SERVICE DATA

Drive pinion bearing preload (For new bearing)	Measured with spring measurement (measured at companion flange bolt hole) N (kgf, lbf)	T-type	17.7 — 38.8 (1.8 — 4.0, 4.0 — 8.7)
		VA-type	12.7 — 32.2 (1.3 — 3.3, 2.9 — 7.2)
	Measured with torque wrench N·m (kgf-m, ft-lb)	T-type	0.67 — 1.47 (0.07 — 0.15, 0.49 — 1.08)
		VA-type	0.48 — 1.22 (0.05 — 0.12, 0.35 — 0.90)
Side gear backlash mm (in)		T-type	0.10 — 0.20 (0.004 — 0.008)
		VA1-type	0.05 — 0.15 (0.002 — 0.006)
		VA2-type	0.13 — 0.18 (0.005 — 0.007)
Side bearing standard width mm (in)			20.00 (0.7874)
Hypoid driven gear to drive pinion backlash mm (in)		T-type	0.10 — 0.20 (0.004 — 0.008)
		VA-type	0.10 — 0.15 (0.004 — 0.006)
Hypoid driven gear runout on its back surface mm (in)			0.05 (0.002)

B: COMPONENT

1. REAR DIFFERENTIAL (T-TYPE)

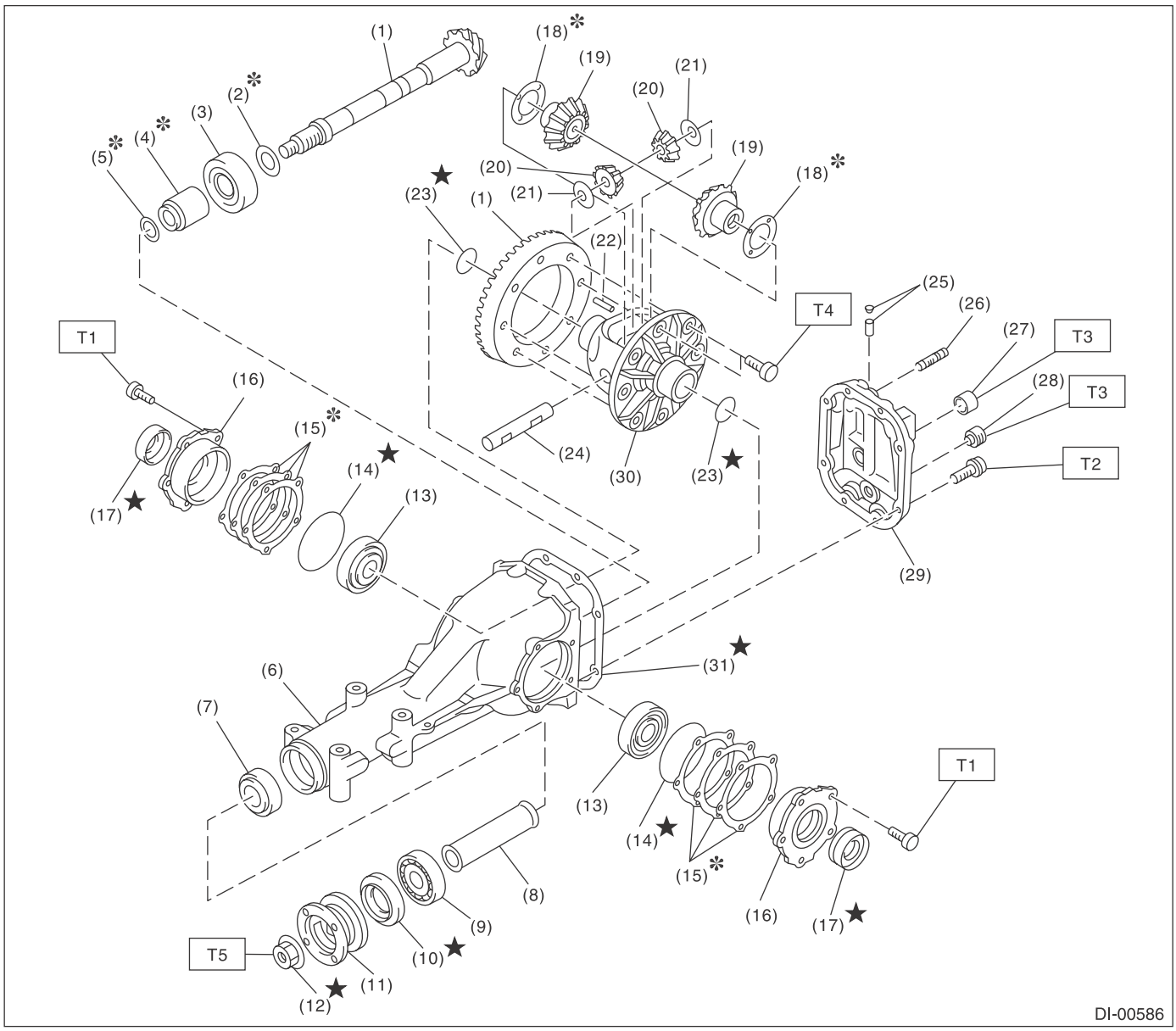

(1)	Hypoid driven gear and drive pinion set	(14)	O-ring	(27)	Oil filler plug
(2)	Pinion height adjusting washer	(15)	Side retainer shim	(28)	Oil drain plug
(3)	Rear bearing	(16)	Side retainer	(29)	Rear cover
(4)	Bearing preload adjusting spacer	(17)	Side oil seal	(30)	Differential case
(5)	Bearing preload adjusting washer	(18)	Side gear thrust washer	(31)	Gasket
(6)	Differential carrier	(19)	Side gear		
(7)	Front bearing	(20)	Pinion mate gear		
(8)	SPACER	(21)	Pinion mate gear washer		
(9)	Pilot bearing	(22)	Pinion shaft lock pin		
(10)	Front oil seal	(23)	Snap ring		
(11)	Companion flange	(24)	Pinion mate shaft		
(12)	Self-locking nut	(25)	Air breather cap		
(13)	Side bearing	(26)	Stud bolt		

Tightening torque:N·m (kgf-m, ft-lb)

T1: 10.5 (1.1, 7.7)
T2: 29.5 (3.0, 21.8)
T3: 49 (5.0, 36.1)
T4: 103 (10.5, 76.0)
T5: 181.5 (18.5, 133.9)

2. REAR DIFFERENTIAL (VA1-TYPE)

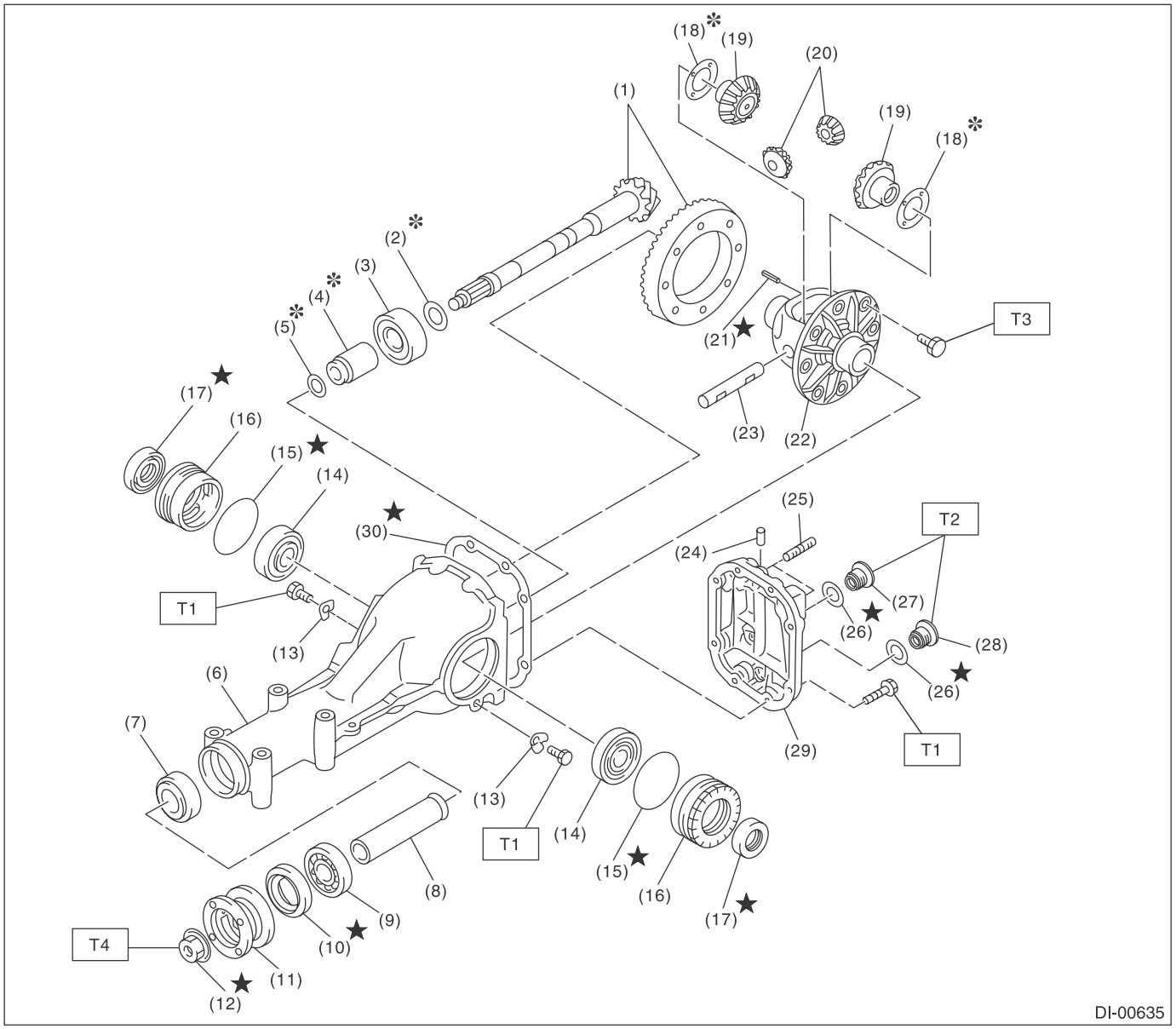

(1)	Hypoid driven gear and drive pinion set	(13)	Lock plate	(25)	Stud bolt
(2)	Pinion height adjusting washer	(14)	Side bearing	(26)	Gasket
(3)	Rear bearing	(15)	O-ring	(27)	Oil filler plug
(4)	Bearing preload adjusting spacer	(16)	Side retainer	(28)	Oil drain plug
(5)	Bearing preload adjusting washer	(17)	Side oil seal	(29)	Rear cover
(6)	Differential carrier	(18)	Side gear thrust washer	(30)	Gasket
(7)	Front bearing	(19)	Side gear		
(8)	SPACER	(20)	Pinion mate gear	***Tightening torque:N·m (kgf-m, ft-lb)***	
(9)	Pilot bearing	(21)	Spring pin	***T1:***	***25 (2.5, 18.4)***
(10)	Front oil seal	(22)	Differential case	***T2:***	***50 (5.1, 36.9)***
(11)	Companion flange	(23)	Pinion mate shaft	***T3:***	***62 (6.3, 45.7)***
(12)	Self-locking nut	(24)	Air breather cap	***T4:***	***191 (19.5, 140.9)***

3. REAR DIFFERENTIAL (VA2-TYPE)

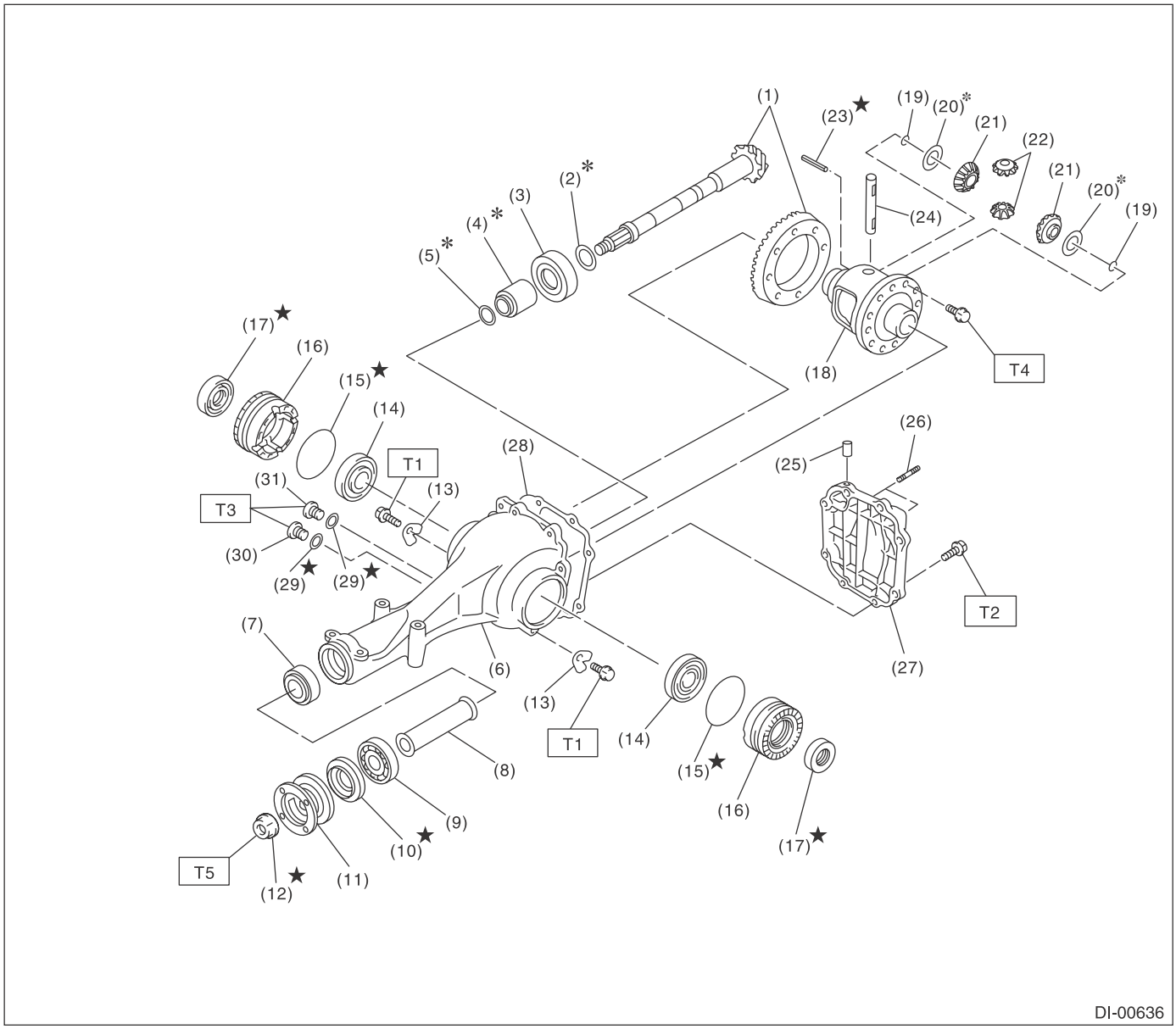

(1)	Hypoid driven gear and drive pinion set	(14)	Side bearing	(27)	Rear cover
(2)	Pinion height adjusting washer	(15)	O-ring	(28)	Gasket
(3)	Rear bearing	(16)	Side retainer	(29)	Gasket
(4)	Bearing preload adjusting spacer	(17)	Side oil seal	(30)	Oil filler plug
(5)	Bearing preload adjusting washer	(18)	Differential case	(31)	Oil drain plug
(6)	Differential carrier	(19)	Circlip		
(7)	Front bearing	(20)	Side gear thrust washer		
(8)	SPACER	(21)	Side gear		
(9)	Pilot bearing	(22)	Pinion mate gear		
(10)	Front oil seal	(23)	Spring pin		
(11)	Companion flange	(24)	Pinion mate shaft		
(12)	Self-locking nut	(25)	Air breather cap		
(13)	Lock plate	(26)	Stud bolt		

Tightening torque:N·m (kgf-m, ft-lb)	
T1:	*25 (2.5, 18.4)*
T2:	*34 (3.5, 25.1)*
T3:	*50 (5.1, 36.9)*
T4:	*<Ref. to DI-51, ASSEMBLY, Rear Differential (VA-type).>*
T5:	*191 (19.5, 140.9)*

4. REAR DIFFERENTIAL MOUNTING SYSTEM

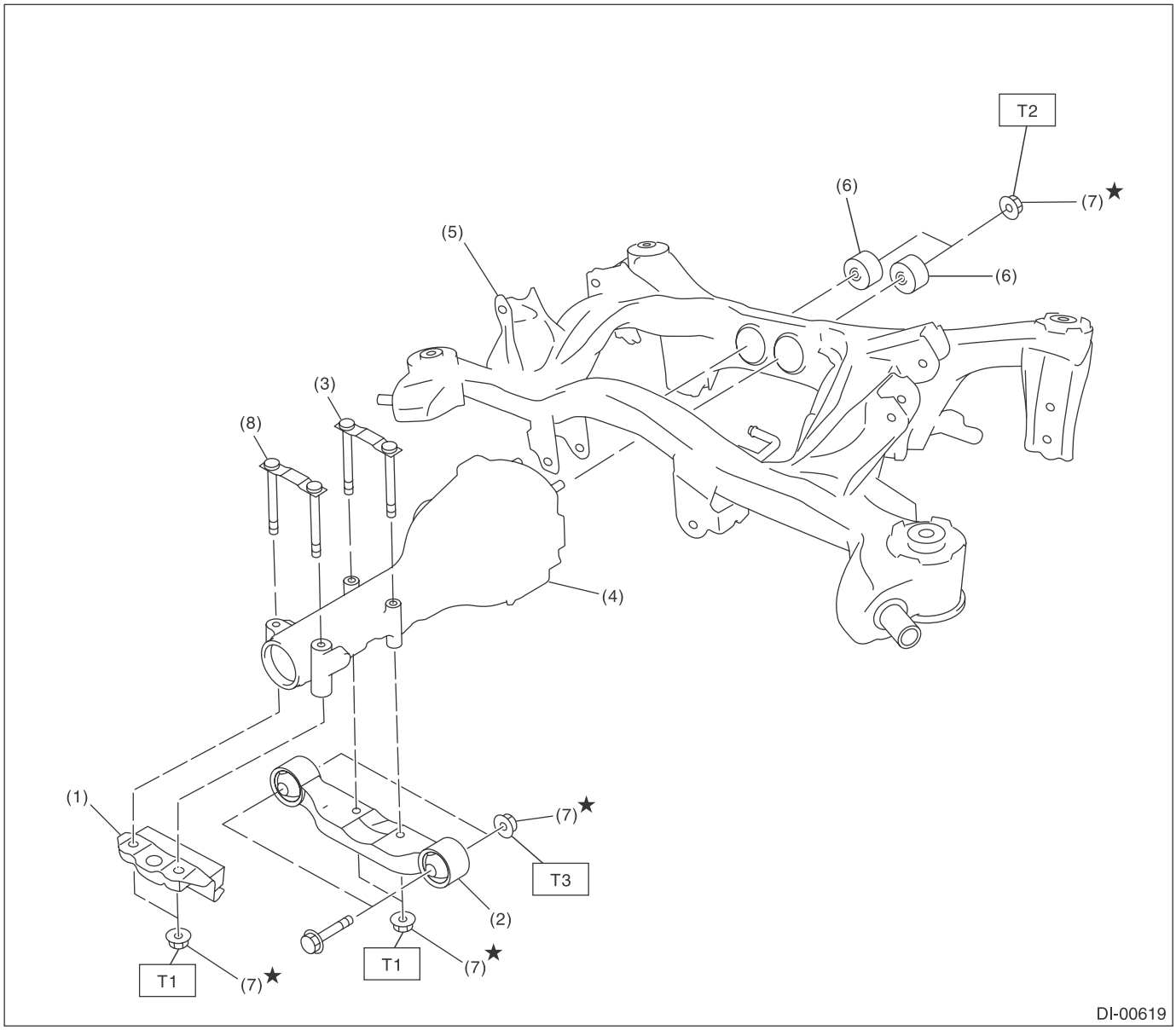

(1)	Mass damper (CVT model)	(5)	Sub frame
(2)	Rear differential front member	(6)	Rear differential mount bushing
(3)	Rear differential member plate	(7)	Self-locking nut
(4)	Rear differential ASSY	(8)	Rear differential member plate (CVT model)

Tightening torque:N·m (kgf-m, ft-lb)
T1: 50 (5.1, 36.9)
T2: 70 (7.1, 51.6)
T3: 110 (11.2, 81.1)

C: CAUTION

- Wear appropriate work clothing, including a cap, protective goggles and protective shoes when performing any work.
- Remove contamination including dirt and corrosion before removal, installation or disassembly.
- Keep the disassembled parts in order and protect them from dust and dirt.
- Before removal, installation or disassembly, be sure to clarify the failure. Avoid unnecessary removal, installation, disassembly and replacement.
- Vehicle components are extremely hot after driving. Be wary of receiving burns from heated parts.
- Use SUBARU genuine gear oil, grease or equivalent. Do not mix gear oil, grease, etc. of different grades or manufacturers.
- Be sure to tighten fasteners including bolts and nuts to the specified torque.
- Place shop jacks or rigid racks at the specified points.
- Apply gear oil onto sliding or revolving surfaces before installation.
- Before installing the O-ring or snap ring, apply a sufficient amount of gear oil to avoid damage and deformation.
- Before securing a part on a vise, place cushioning material such as wood blocks, aluminum plate, or cloth between the part and the vise.
- Avoid damaging the mating surface of the case.

D: PREPARATION TOOL

1. SPECIAL TOOL

ILLUSTRATION	TOOL NUMBER	DESCRIPTION	REMARKS
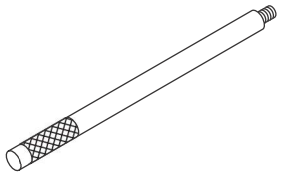 ST-398477701	398477701	HANDLE	Used for installing the front and rear bearing cones.
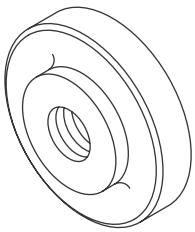 ST-398477702	398477702	DRIFT	• Used for press-fitting the bearing race of differential carrier (front). (T-type) • Used for press-fitting bearing race of differential carrier (rear). (VA1-type) • Used for press-fitting side bearing race. (VA1-type)
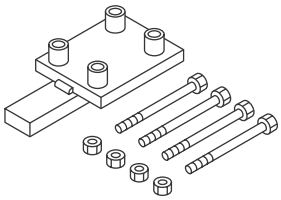 ST-398217700	398217700	ATTACHMENT SET	Stand for rear differential carrier disassembly and assembly.
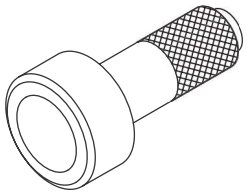 ST-498447120	498447120	INSTALLER	Used for installing the front oil seal.

ILLUSTRATION	TOOL NUMBER	DESCRIPTION	REMARKS
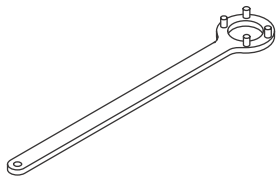 ST-498427200	498427200	FLANGE WRENCH	Used for stopping rotation of companion flange when removing and tightening self-lock nut.
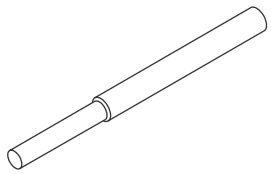 ST-398467700	398467700	DRIFT	• Used for removing pinion, pilot bearing and front bearing cone. • For T-type and VA1-type
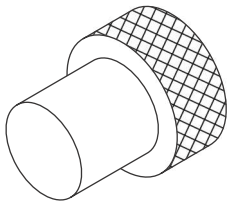 ST-399780104	399780104	WEIGHT	Used for installing the front bearing cone and the pilot bearing companion flange.
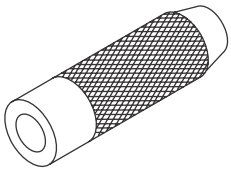 ST-899580100	899580100	INSTALLER	Used for press-fitting the front bearing cone and pilot bearing.
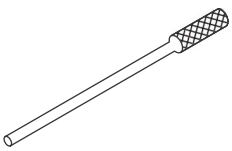 ST-899904100	899904100	STRAIGHT PIN REMOVER	Used for removing the spring pin of the differential pinion shaft.

ILLUSTRATION	TOOL NUMBER	DESCRIPTION	REMARKS
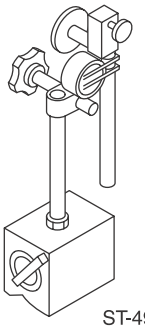 ST-498247001	498247001	MAGNET BASE	• Used for measuring backlash between side gear and pinion, and hypoid gear. • Used together with DIAL GAUGE (498247100).
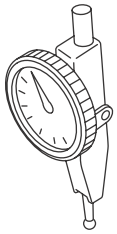 ST-498247100	498247100	DIAL GAUGE	• Used for measuring backlash between side gear and pinion, and hypoid gear. • Used together with MAGNET BASE (498247001).
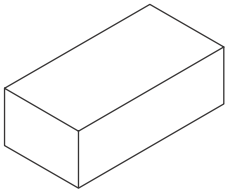 ST-398507704	398507704	BLOCK	• Used for adjusting pinion height and preload. • For T-type and VA1-type
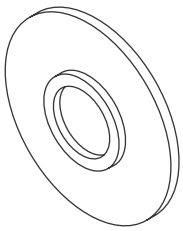 ST-398177700	398177700	INSTALLER	• Used for installing the rear bearing cone. • For T-type and VA2-type
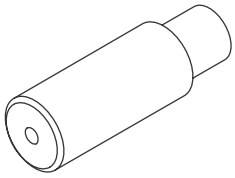 ST-398457700	398457700	ATTACHMENT	• Used for removing the side bearing retainer. • For T-type

ILLUSTRATION	TOOL NUMBER	DESCRIPTION	REMARKS
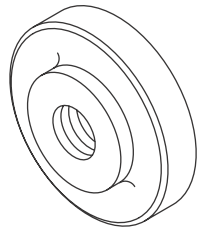 ST-398477703	398477703	DRIFT 2	• Used for press-fitting bearing race (rear) of differential carrier. • For T-type and VA2-type
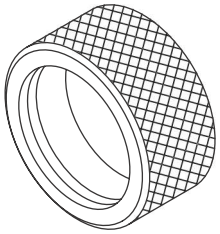 ST-398437700	398437700	DRIFT	• Used for installing the side oil seal. • For T-type and VA2-type
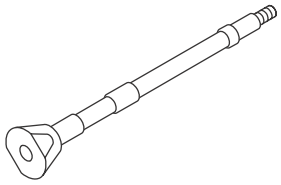 ST-398507702	398507702	DUMMY SHAFT	• Used for adjusting pinion height and preload. • For T-type
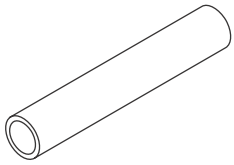 ST-398507703	398507703	DUMMY COLLAR	• Used for adjusting pinion height and preload. • For T-type
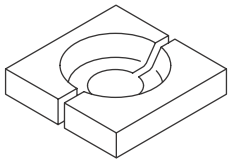 ST-398517700	398517700	REPLACER	• Used for removing rear bearing cone. • For T-type and VA2-type

ILLUSTRATION	TOOL NUMBER	DESCRIPTION	REMARKS
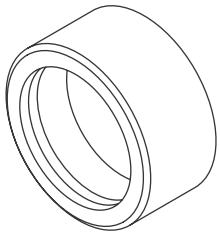 ST-398487700	398487700	DRIFT	• Used for press-fitting side bearing cone. • For T-type and VA2-type
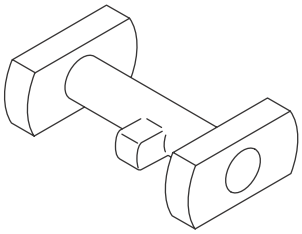 ST-398507701	398507701	DIFFERENTIAL CARRIER GAUGE	• Used for adjusting pinion height. • For T-type
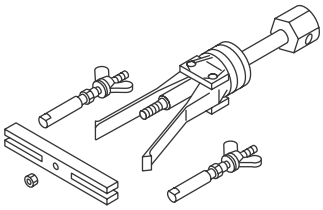 ST-398527700	398527700	PULLER ASSY	• Used for removing front oil seal. • Used for removing side bearing cup. (T-type)
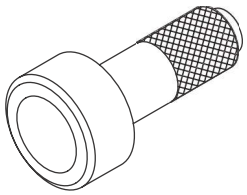 ST-398417700	398417700	DRIFT	• Used for installing side bearing race. • For T-type and VA2-type
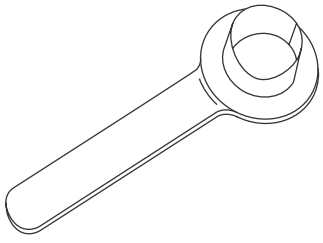 ST28099PA090	28099PA090	OIL SEAL PROTECTOR	• Used for installing the rear drive shaft to the rear differential. • For oil seal protection

ILLUSTRATION	TOOL NUMBER	DESCRIPTION	REMARKS
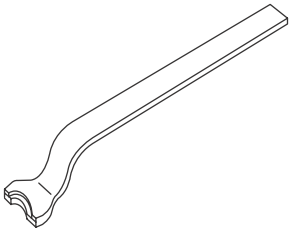 ST28099PA100	28099PA100	DRIVE SHAFT REMOVER	• Used for removing the rear drive shaft from rear differential. • For T-type
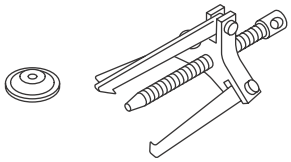 ST-399703600	399703600	PULLER ASSY	Used for removing companion flange.
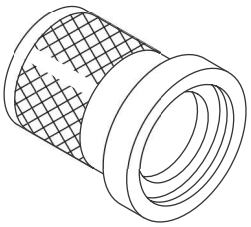 ST-899874100	899874100	INSTALLER	Used for installing the companion flange.
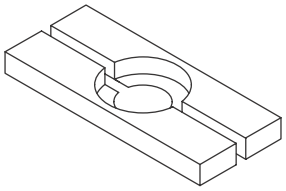 ST-498077000	498077000	REMOVER	• Used for removing the differential side bearing cone. • For VA2-type
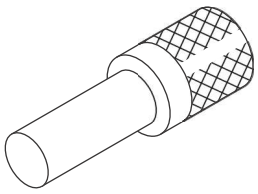 ST-899864100	899864100	REMOVER	Used for removing the differential side bearing.

ILLUSTRATION	TOOL NUMBER	DESCRIPTION	REMARKS
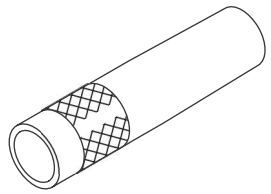 ST-499277200	499277200	INSTALLER	• Used for installing the front bearing cone. • For VA2-type
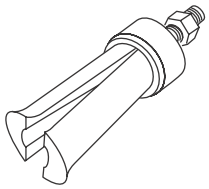 ST18758AA000	18758AA000	PULLER	• Used for removing side bearing cup. • For VA2-type
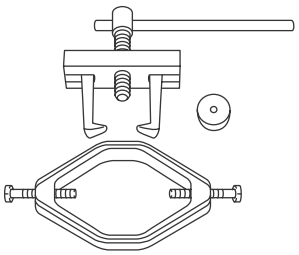 ST18759AA000	18759AA000	PULLER ASSY	• Used for removing the differential side bearing cone. • For T-type
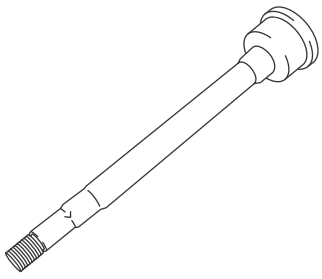 ST18678AA000	18678AA000	DUMMY SHAFT	• Used for adjusting pinion height and preload. • For VA2-type
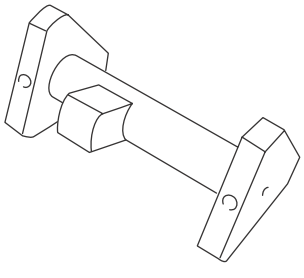 ST18831AA010	18831AA010	DIFFERENTIAL CARRIER GAUGE	• Used for adjusting pinion height. • For VA2-type

ILLUSTRATION	TOOL NUMBER	DESCRIPTION	REMARKS
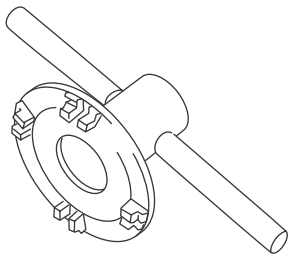 ST18630AA010	18630AA010	WRENCH COMPL RETAINER	• Used for removing and installing the side oil seal holder. • For VA-type • WRENCH ASSY (499787000) can also be used.
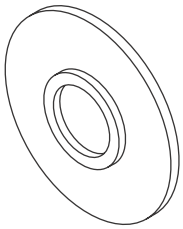 ST-498175500	498175500	INSTALLER	• Used for installing the rear bearing cone. • For VA1-type
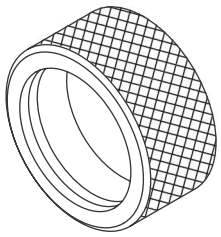 ST-498447100	498447100	INSTALLER	• Used for installing the oil seal. • For VA1-type
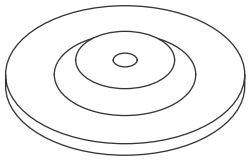 ST-399520105	399520105	SEAT	• Used for removing the side bearing cone. • Used together with PULLER SET (899524100). • For VA-type
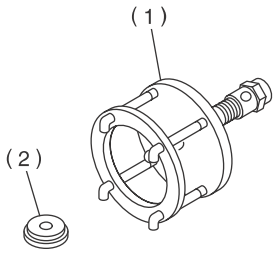 ST-899524100	899524100	PULLER SET	• Used for removing the differential side bearing cone. • For VA-type (1) Puller (2) Cap

ILLUSTRATION	TOOL NUMBER	DESCRIPTION	REMARKS
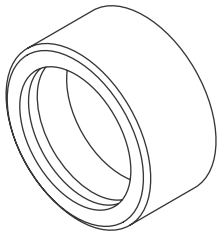 ST-498485400	498485400	DRIFT	• Used for installing side bearing cone. • For VA1-type
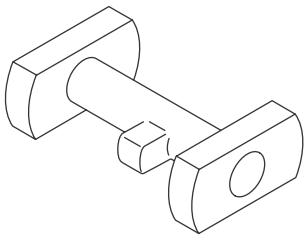 ST-498505501	498505501	DIFFERENTIAL CARRIER GAUGE	• Used for adjusting pinion height. • For VA1-type
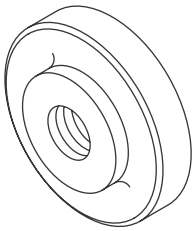 ST-498447110	498447110	DRIFT	• Used for press-fitting the bearing race (front) of the differential carrier. • For VA1-type
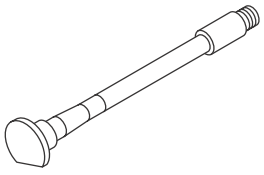 ST-498447150	498447150	DUMMY SHAFT	• Used for adjusting pinion height and preload. • For VA1-type
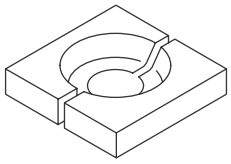 ST-498515500	498515500	REPLACER	• Used for removing rear bearing cone. • For VA1-type

ILLUSTRATION	TOOL NUMBER	DESCRIPTION	REMARKS
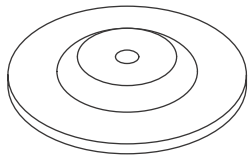 ST-499705404	499705404	SEAT	• Used for removing the side bearing race. • Used together with PULLER ASSY (499705401). • For VA1-type
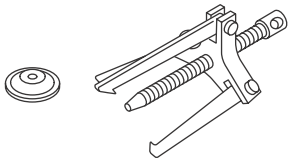 ST-499705401	499705401	PULLER ASSY	• Used for removing the side bearing race. • Used together with SEAT (499705404). • For VA-type
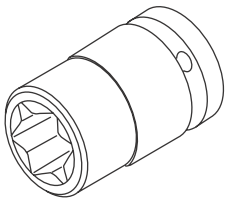 ST18270KA020	18270KA020	SOCKET (E20)	• Used for removing and installing the hypoid driven gear. • For VA2-type
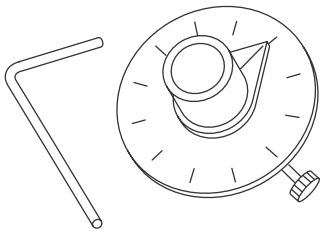 ST18854AA000	18854AA000	ANGLE GAUGE	• Used for installing the hypoid driven gear. • For VA2-type

ILLUSTRATION	TOOL NUMBER	DESCRIPTION	REMARKS
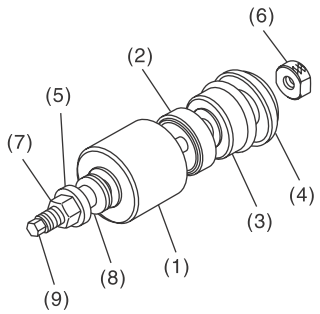 ST41399FG000	41399FG000	SPECIAL TOOL ASSY	• Used for removing and installing the rear differential mount bushing. • Use (1), (3), (5), (6), (7), (8) and (9) for removal. • Use (2), (4), (5), (6), (7), (8) and (9) for installation. (1) SPECIAL TOOL A (41399FG010) (2) SPECIAL TOOL B (41399FG020) (3) SPECIAL TOOL C (41399FG030) (4) SPECIAL TOOL D (41399FG040) (5) SPECIAL TOOL SLEEVE (41399FG050) (6) SPECIAL TOOL RING (41399FG060) (7) SPECIAL TOOL NUT (41399FG070) (8) SPECIAL TOOL BEARING (41399FG080) (9) SPECIAL TOOL SHAFT (41399FG090)
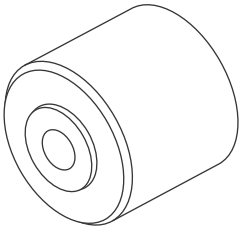 ST41399FG010	41399FG010	SPECIAL TOOL A	• Used for removing the rear differential mount bushing. • For combination of tools for removal, refer to “SPECIAL TOOL ASSY (41399FG000)”.
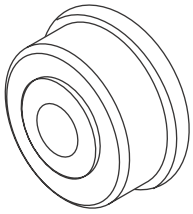 ST41399FG020	41399FG020	SPECIAL TOOL B	• Used for installing the rear differential mount bushing. • For combination of tools for installation, refer to “SPECIAL TOOL ASSY (41399FG000)”.
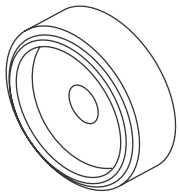 ST41399FG030	41399FG030	SPECIAL TOOL C	• Used for removing the rear differential mount bushing. • For combination of tools for removal, refer to “SPECIAL TOOL ASSY (41399FG000)”.

ILLUSTRATION	TOOL NUMBER	DESCRIPTION	REMARKS
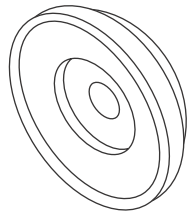 ST41399FG040	41399FG040	SPECIAL TOOL D	• Used for installing the rear differential mount bushing. • For combination of tools for installation, refer to “SPECIAL TOOL ASSY (41399FG000)”.
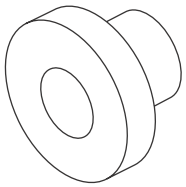 ST41399FG050	41399FG050	SPECIAL TOOL SLEEVE	• Used for removing and installing the rear differential mount bushing. • For combination of tools for removal and installation, refer to “SPECIAL TOOL ASSY (41399FG000)”.
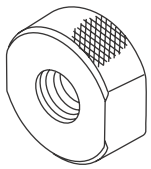 ST41399FG060	41399FG060	SPECIAL TOOL RING	• Used for removing and installing the rear differential mount bushing. • For combination of tools for removal and installation, refer to “SPECIAL TOOL ASSY (41399FG000)”.
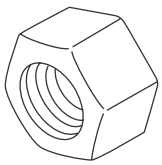 ST41399FG070	41399FG070	SPECIAL TOOL NUT	• Used for removing and installing the rear differential mount bushing. • For combination of tools for removal and installation, refer to “SPECIAL TOOL ASSY (41399FG000)”.
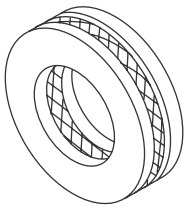 ST41399FG080	41399FG080	SPECIAL TOOL BEARING	• Used for removing and installing the rear differential mount bushing. • For combination of tools for removal and installation, refer to “SPECIAL TOOL ASSY (41399FG000)”.

ILLUSTRATION	TOOL NUMBER	DESCRIPTION	REMARKS
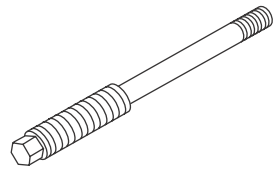 ST41399FG090	41399FG090	SPECIAL TOOL SHAFT	• Used for removing and installing the rear differential mount bushing. • For combination of tools for removal and installation, refer to “SPECIAL TOOL ASSY (41399FG000)”.
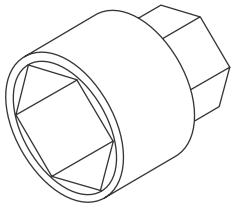 ST41399YC000	41399YC000	SOCKET WRENCH (17)	Used for tightening the self-locking nut.
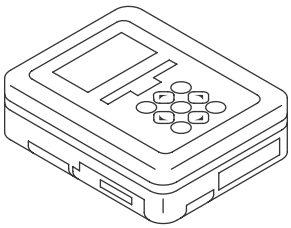 ST1B022XU0	1B022XU0	SUBARU SELECT MONITOR III KIT	Used for troubleshooting the electrical system.

2. GENERAL TOOL

TOOL NAME	REMARKS
Transmission jack	Used for removing and installing the rear differential.
Puller	Used for removing the side bearing retainer.
Thickness gauge	Used for measuring clearance.
Hexagon wrench	Used for installing and removing the oil filler plug and oil drain plug.
Tire lever	Used for removing the rear drive shaft. (VA-type)

2. Differential Gear Oil

A: INSPECTION

1) Remove the oil filler plug, and then check the gear oil. Replace the gear oil if it is contaminated or deteriorated. <Ref. to DI-23, REPLACEMENT, Differential Gear Oil.>
2) Check that the gear oil level is within –5 mm (–0.2 in) from the bottom of the oil filler plug hole. If the level is low, make sure that there is no oil leakage and refill up to the bottom of oil filler plug hole.

NOTE:
On VA1-types at factory settings, the oil level may be within –14 mm (–0.6 in) from the bottom of the oil filler plug. This is at normal level, requiring no oil refill.

- T-type

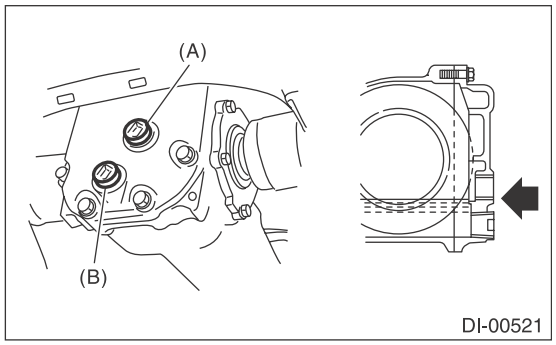

(A) Oil filler plug
(B) Oil drain plug

- VA1-type

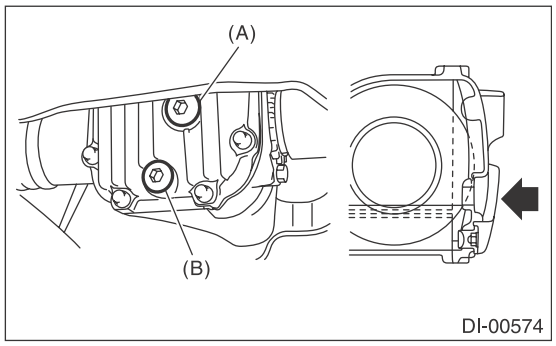

(A) Oil filler plug
(B) Oil drain plug

- VA2-type

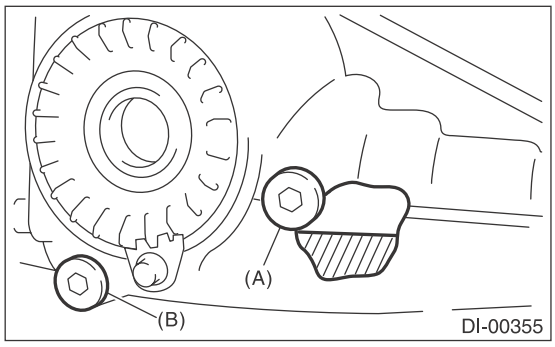

(A) Oil filler plug
(B) Oil drain plug

B: REPLACEMENT

CAUTION:
• Gear oil is extremely hot just after driving. Be wary of receiving burns.
• If the differential gear oil is spilt over exhaust pipe, wipe it off with cloth to avoid emitting smoke or causing a fire.

1) Lift up the vehicle.
2) Remove the oil drain plug and oil filler plug, and drain the gear oil.

- T-type

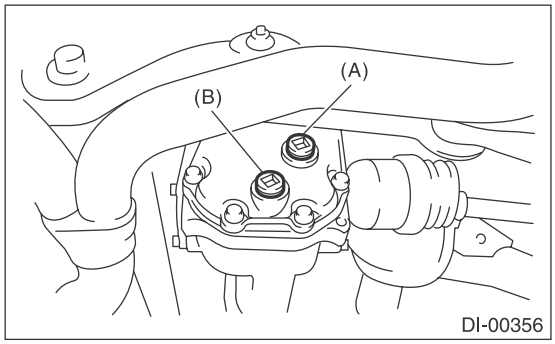

(A) Oil filler plug
(B) Oil drain plug

- VA1-type

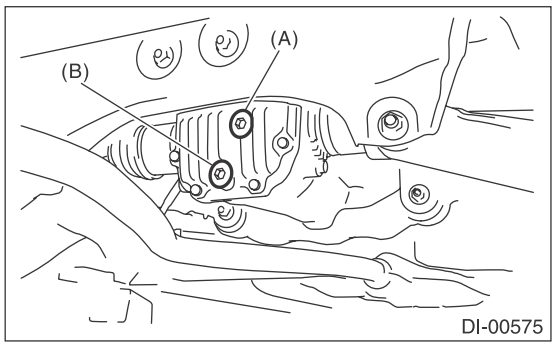

(A) Oil filler plug
(B) Oil drain plug

• VA2-type

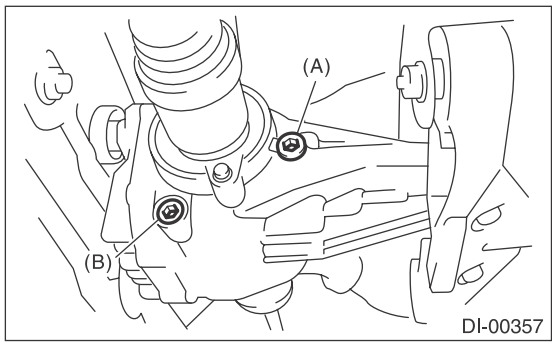

(A) Oil filler plug
(B) Oil drain plug

3) Tighten the oil drain plug.

NOTE:
• For the T-type, apply liquid gasket to the oil drain plug.

Liquid gasket:
THREE BOND 1105 (Part No. 004403010) or equivalent
• For VA type, use a new gasket.

Tightening torque:
T-type
49 N·m (5.0 kgf-m, 36.1 ft-lb)
VA-type:
50 N·m (5.1 kgf-m, 36.9 ft-lb)

4) Fill the differential carrier with gear oil to the bottom of oil filler plug hole.

NOTE:
Carefully refill oil while watching the level. Excessive or insufficient oil must be avoided.

Recommended gear oil:
<Ref. to DI-2, SPECIFICATION, General Description.>

Oil capacity:
0.8 ℓ (0.8 US qt, 0.7 Imp qt)

• T-type

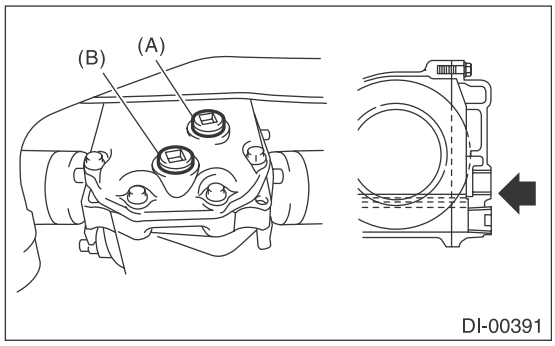

(A) Oil filler plug
(B) Oil drain plug

• VA1-type

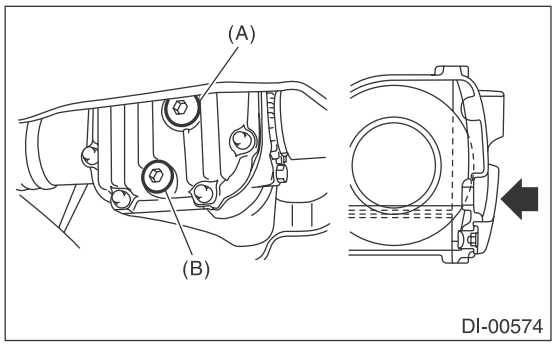

(A) Oil filler plug
(B) Oil drain plug

• VA2-type

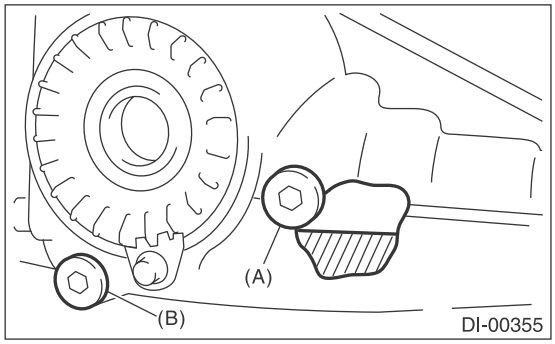

(A) Oil filler plug
(B) Oil drain plug

5) Install the oil filler plug.

NOTE:
• For the T-type, apply liquid gasket to the oil filler plug.

Liquid gasket:
THREE BOND 1105 (Part No. 004403010) or equivalent
• For VA type, use a new gasket.

Tightening torque:
T-type:
49 N·m (5.0 kgf-m, 36.1 ft-lb)
VA-type:
50 N·m (5.1 kgf-m, 36.9 ft-lb)

3. Front Differential Assembly

A: NOTE

1. CVT MODEL

For front differential for the CVT model, refer to the “CVT” section. <Ref. to CVT-264, Front Differential Assembly.>

2. AT MODEL

For front differential of 5AT model, refer to “5AT” section. <Ref. to 5AT-88, Front Differential Assembly.>

3. MT MODEL

For front differential for the 6MT model, refer to the “6MT” section. <Ref. to 6MT-73, Front Differential Assembly.>

4. Rear Differential (T-type)

A: REMOVAL

1) Set the vehicle on a lift.
2) Shift the select lever or gear shift lever to neutral.
3) Release the parking brake.
4) Disconnect the ground cable from battery.
5) Loosen the wheel nuts.
6) Lift up the vehicle.
7) Remove the rear wheels.
8) Drain differential gear oil. <Ref. to DI-23, REPLACEMENT, Differential Gear Oil.>
9) Remove the rear exhaust pipe.
- 2.5 L SOHC model

<Ref. to EX(H4SO)-8, REMOVAL, Rear Exhaust Pipe.>
- 2.5 L DOHC turbo model

<Ref. to EX(H4DOTC)-15, REMOVAL, Rear Exhaust Pipe.>
- 3.6 L model

<Ref. to EX(H6DO)-8, REMOVAL, Rear Exhaust Pipe.>
10) Remove the heat shield cover.

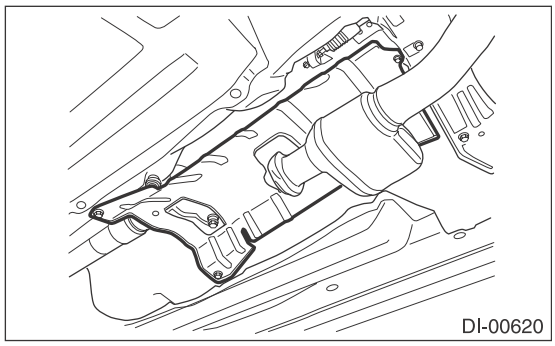

11) Remove the propeller shaft. <Ref. to DS-10, REMOVAL, Propeller Shaft.>
12) Loosen the self-lock nuts which hold the rear differential to rear crossmember.

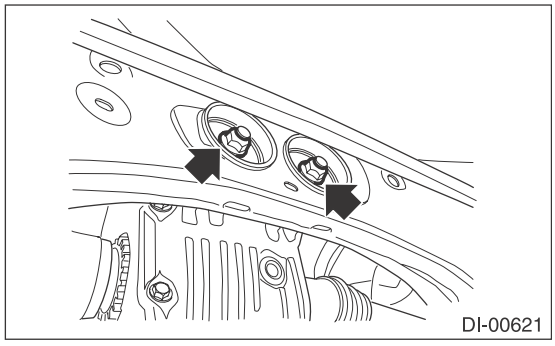

13) Remove the DOJ of rear drive shaft from rear differential using ST or tire lever.

NOTE:
- For the T-type, use the ST.
- For the VA-type, use the tire lever.

T-type

ST 28099PA100 DRIVE SHAFT REMOVER

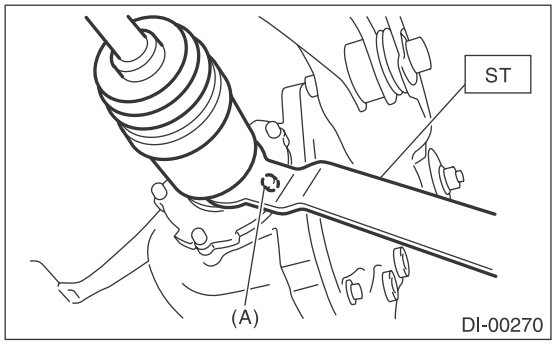

(A) BOLT

VA-type

When removing the DOJ from the rear differential, place the tire lever against the bolt as shown in the figure so as not to damage the side retainer.

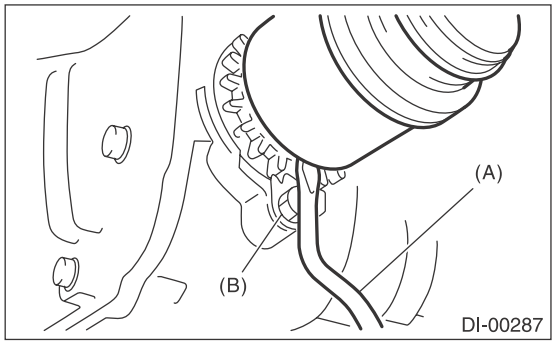

(A) Tire lever
(B) BOLT

14) Set the rear differential to transmission jack.

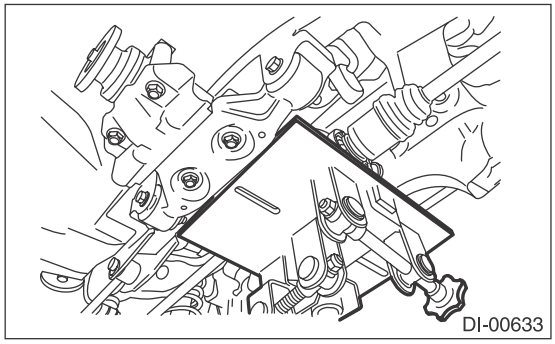

15) Remove the mass damper. (CVT model)

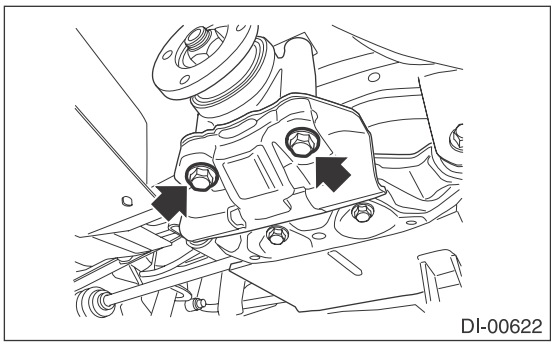

16) Remove the rear differential front member.

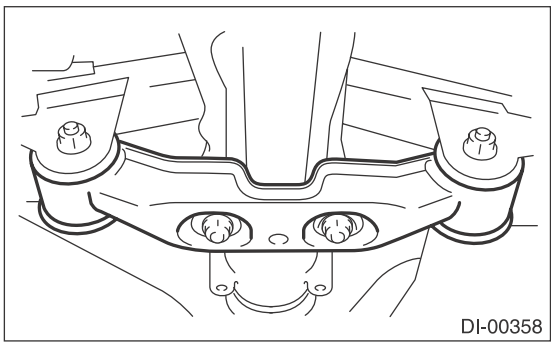

17) Remove the self-locking nuts which hold the rear differential to the crossmember.
18) Remove the rear differential stud bolt from rear crossmember bushing.

NOTE:
When removing the stud bolt from the rear crossmember bushing, carefully adjust the angle and location of transmission jack and jack stand, if necessary.

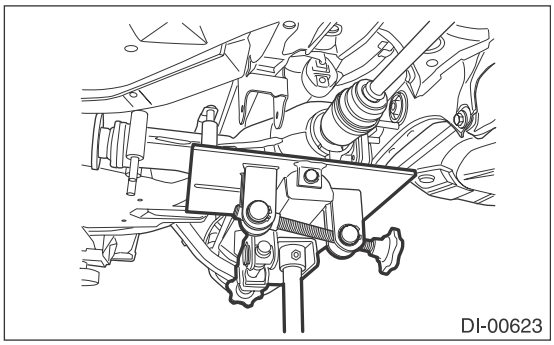

19) Lower the transmission jack.
20) Pull out the axle shaft from rear differential.

NOTE:
• If it is difficult to remove the axle shaft from rear differential, use the ST for T-type and the tire lever for VA-type.
ST 28099PA100 DRIVE SHAFT REMOVER

• If a circlip is attached to the removed axle shaft for VA2 type, remove the differential case assembly and replace it with a new part.

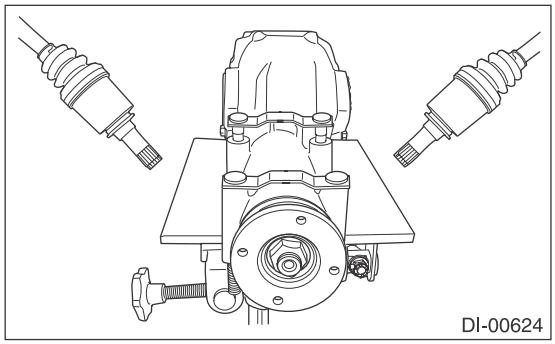

21) Lower the transmission jack.
22) Secure the rear drive shaft to rear lateral link using wire.

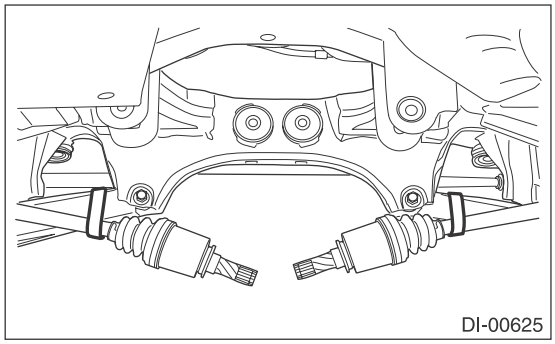

23) Remove the rear differential member plate from rear differential.

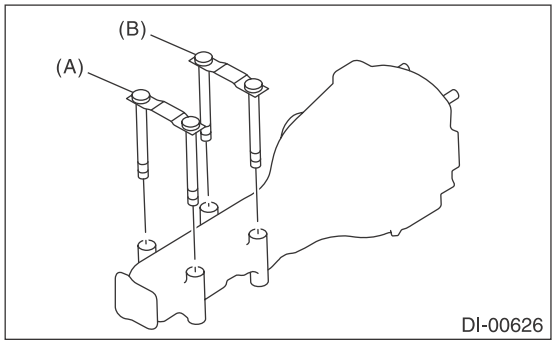

(A) Rear differential member plate (CVT model)
(B) Rear differential member plate

B: INSTALLATION

1) Install the rear differential member plate to the rear differential.

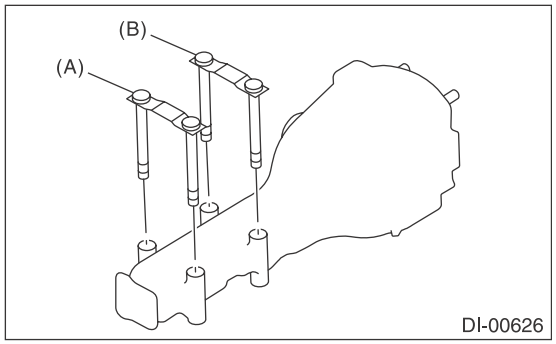

(A) Rear differential member plate (CVT model)
(B) Rear differential member plate

2) Set the rear differential to transmission jack.
3) Set the ST to the rear differential.
ST 28099PA090 OIL SEAL PROTECTOR

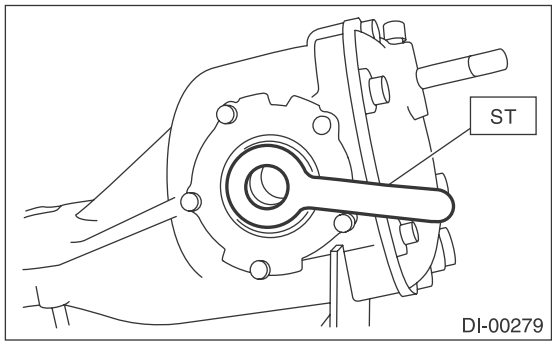

4) Insert the rear axle shaft until the spline portion of the rear drive shaft exceeds the side oil seal.

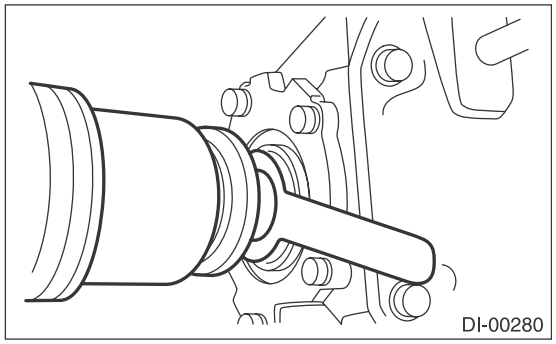

5) Remove ST from rear differential.

6) Push the rear differential from side to side to insert the rear axle shaft into rear differential completely.

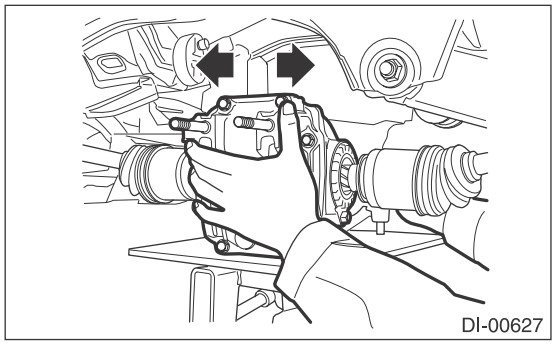

7) Adjust the transmission jack, if necessary, and insert the rear differential stud bolt into rear crossmember bushing properly.

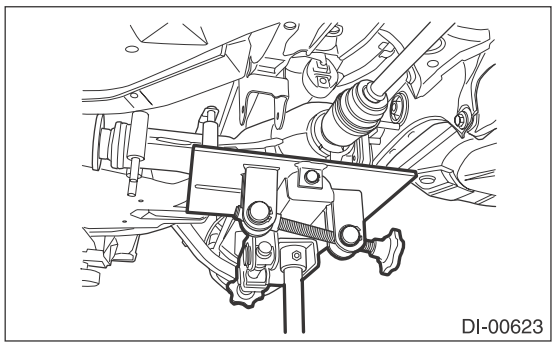

8) After inserting the rear differential stud bolt into the rear crossmember bushing, lift up the transmission jack and align the rear differential to its attachment position.

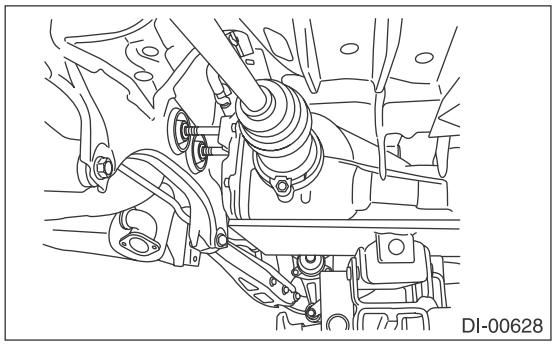

9) Tighten a new self-locking nut temporarily to rear crossmember.

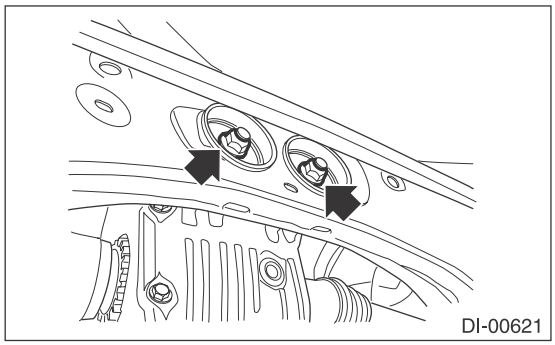

10) Install the rear differential front member with a new self-locking nut.

Tightening torque:
T1: 50 N·m (5.1 kgf-m, 36.9 ft-lb)
T2: 110 N·m (11.2 kgf-m, 81.1 ft-lb)

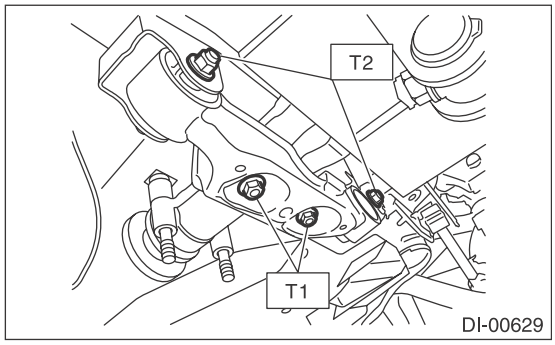

11) Install the mass damper with a new self-locking nut. (CVT model)

Tightening torque:
50 N·m (5.1 kgf-m, 36.9 ft-lb)

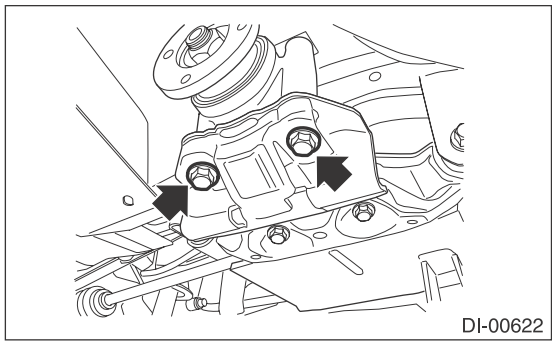

12) Tighten the self-locking nut.

NOTE:
For models other than OUTBACK model, tighten the self-locking nut using the ST.
ST 41399YC000 SOCKET WRENCH (17)

Tightening torque:
70 N·m (7.1 kgf-m, 51.6 ft-lb)

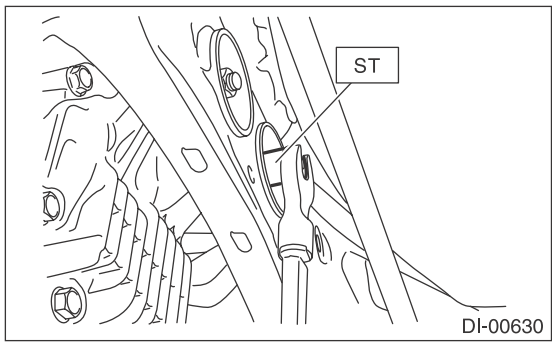

13) Remove the transmission jack.
14) Install the propeller shaft. <Ref. to DS-10, INSTALLATION, Propeller Shaft.>
15) Install the heat shield cover.

Tightening torque:
18 N·m (1.8 kgf-m, 13.3 ft-lb)

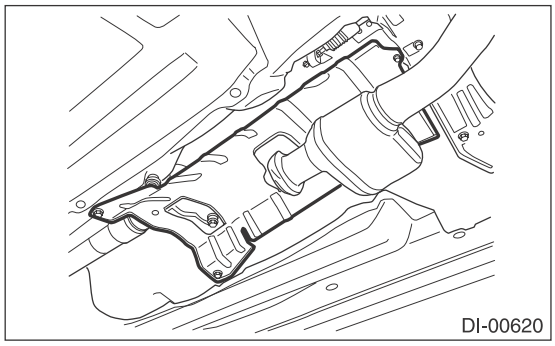

16) Install the rear exhaust pipe.
- 2.5 L SOHC model

<Ref. to EX(H4SO)-8, INSTALLATION, Rear Exhaust Pipe.>
- 2.5 L DOHC turbo model

<Ref. to EX(H4DOTC)-15, INSTALLATION, Rear Exhaust Pipe.>
- 3.6 L model

<Ref. to EX(H6DO)-8, INSTALLATION, Rear Exhaust Pipe.>
17) Fill differential gear oil. <Ref. to DI-23, REPLACEMENT, Differential Gear Oil.>
18) Hereafter, install in the reverse order of removal.
19) Perform “Rear Differential Inspection Mode” using the Subaru Select Monitor. (CVT model) <Ref. to DI-78, Rear Differential Inspection Mode.>

CAUTION:
Be sure to perform Rear Differential Inspection Mode when the following work has been performed.
- **Replacement of rear differential**
- **Replacement of rear differential hypoid gear set**
- **Replacement of transmission assembly**
- **Replacement of front differential hypoid gear set**

C: DISASSEMBLY

To detect the real cause of trouble, inspect the following items before disassembling.
- Tooth contact and backlash between hypoid driven gear and drive pinion
- Hypoid driven gear runout on its back surface
- Total preload of drive pinion

1) Set the ST on vise and install the differential assembly to ST.
ST 398217700 ATTACHMENT SET

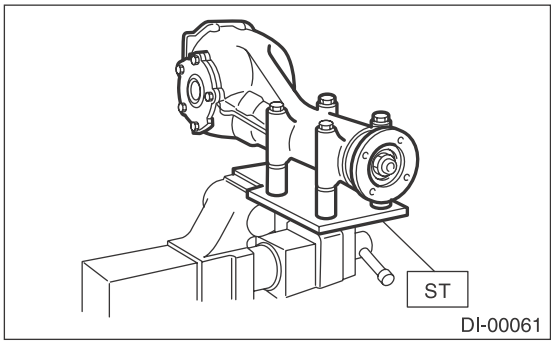

2) Remove the air breather cap.

NOTE:
- Do not attempt to replace the air breather cap unless necessary.
- Whenever the air breather cap is removed, replace it with a new part.

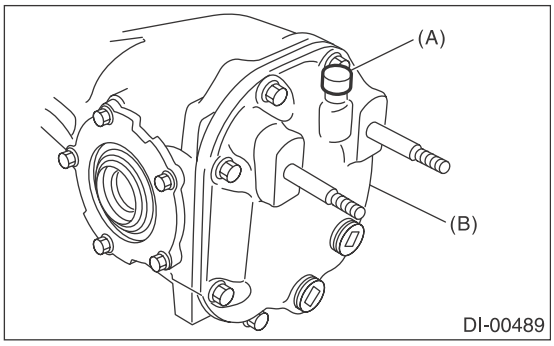

(A) Air breather cap
(B) Rear cover

3) Remove the oil drain plug and oil filler plug.
4) Remove the bolts, and then remove the rear cover.
5) Remove the side retainer attachment bolts, set the ST to differential case, and extract the side retainers RH and LH with a puller.

NOTE:
- Each shim, which is installed to adjusted the side bearing preload, should be kept together with its mating retainer.
- Keep the side retainers separate by attaching tags or in similar ways to make it possible to identify RH and LH sides.

ST 398457700 ATTACHMENT

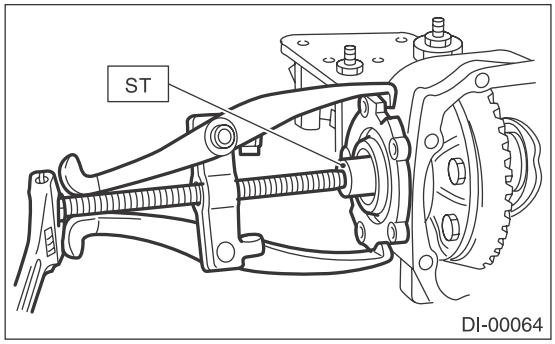

6) Pull out the differential case assembly from the differential carrier.

NOTE:
Be careful not to hit the teeth of hypoid driven gear against the case while removing.

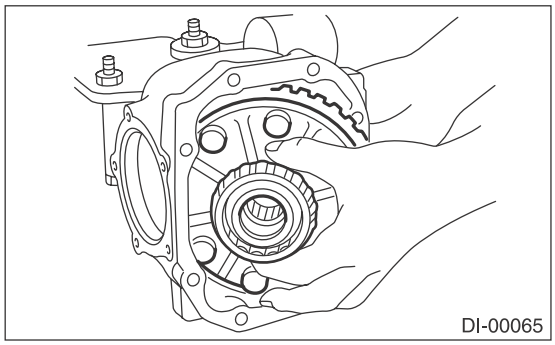

7) When replacing the side bearing, remove the bearing cup from the side retainer using ST.
ST 398527700 PULLER ASSY

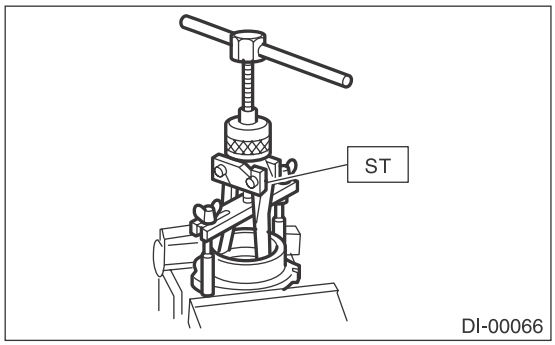

8) Using the ST, remove the bearing cone.

NOTE:
- Do not attempt to disassemble the parts unless necessary.
- Set the ST so that its claws catch the edge of the bearing cone.

• Never mix up the RH and LH bearing races and cones.

ST 18759AA000 PULLER ASSY

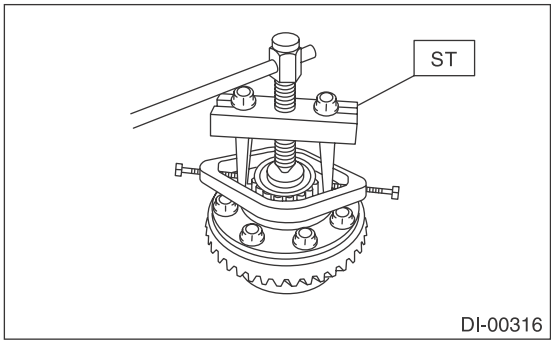

9) Remove the hypoid driven gear by loosening hypoid driven gear bolts.

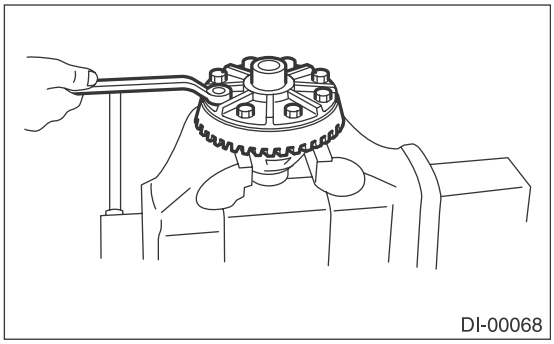

10) Remove the pinion shaft lock pin from hypoid driven gear side using ST.

NOTE:
The lock pin is staked at the pin hole end on the differential carrier. Do not drive it out forcibly before removing the stake.

ST 899904100 STRAIGHT PIN REMOVER

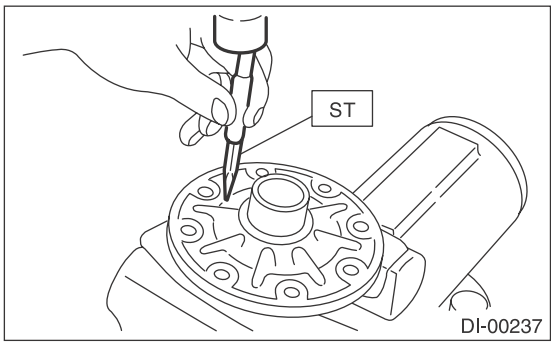

11) Draw out the pinion mate shaft and remove pinion mate gears, side gears and thrust washers.

NOTE:
The gears should be marked or kept separated right and left, and front and rear as well as thrust washers.

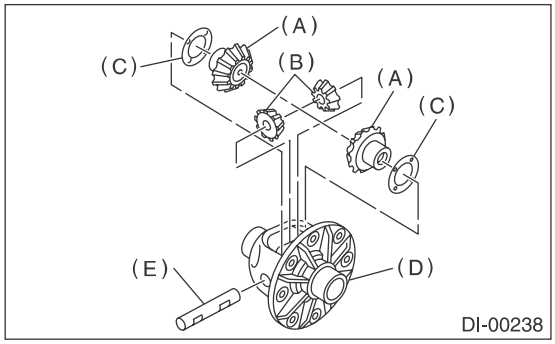

(A) Side gear
(B) Pinion mate gear
(C) Thrust washer
(D) Differential case
(E) Pinion mate shaft

12) Remove the self-locking nut while holding the companion flange with ST.

ST 498427200 FLANGE WRENCH

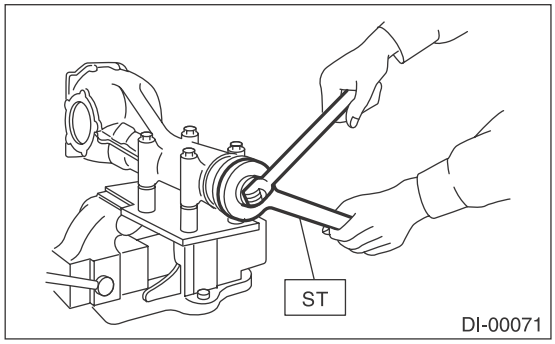

13) Extract the companion flange with a puller.

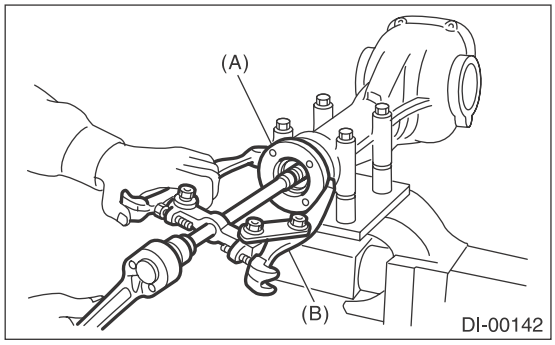

(A) Companion flange
(B) Puller

14) Press the end of drive pinion shaft and extract it together with rear bearing cone, pinion height adjusting washer and washer by using the ST.

NOTE:
Hold the drive pinion so as not to drop it.
ST 398467700 DRIFT

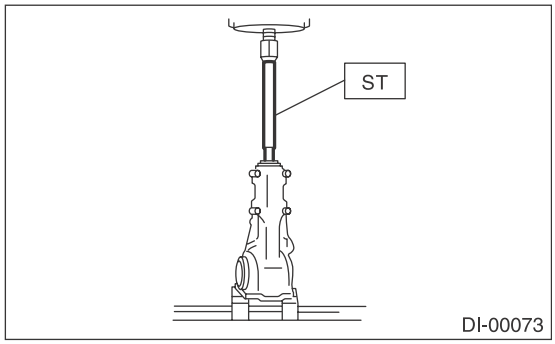

15) Remove the rear bearing cone from drive pinion while supporting the cone with ST.

NOTE:
Place the replacer so that its center-recessed side faces the pinion gear.
ST 398517700 REPLACER

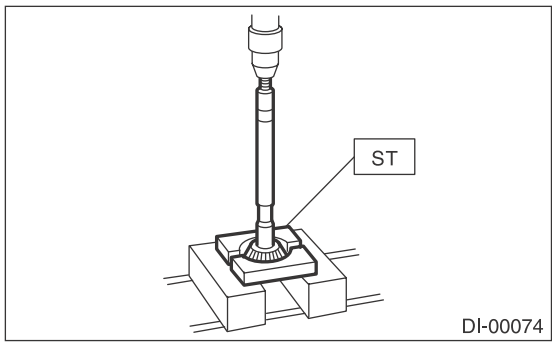

16) Remove the front oil seal from differential carrier using ST.
ST 398527700 PULLER ASSY

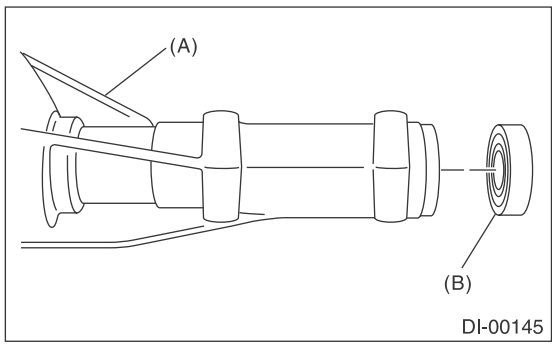

(A) Differential carrier
(B) Front oil seal

17) Remove the pilot bearing together with the front bearing cone and spacer using the ST.
ST 398467700 DRIFT

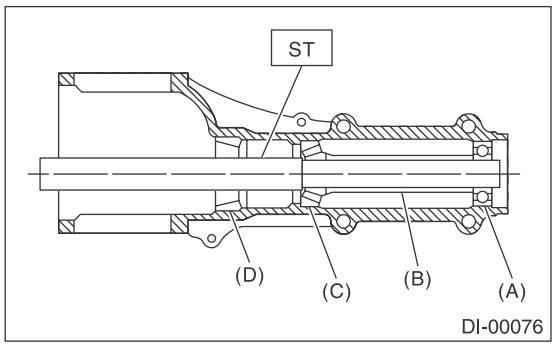

(A) Pilot bearing
(B) SPACER
(C) Front bearing
(D) Rear bearing cup

18) When replacing the bearings, hit out the front bearing cup and rear bearing cup in this order using a brass bar.

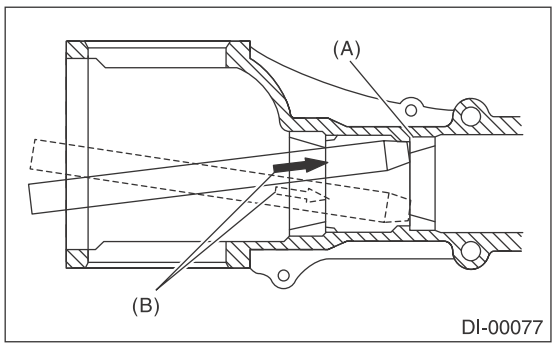

(A) 2 cutout portions along diagonal lines
(B) Tap alternately with brass bar.

D: ASSEMBLY

NOTE:
- Assemble in the reverse order of disassembly.
- Check and adjust each part during assembly.
- Keep the shims and washers in order, so that they are not improperly installed.
- Thoroughly clean the surfaces on which the shims, washers and bearings are to be installed.
- Apply gear oil when installing the bearings and thrust washers.
- Be careful not to mix up the RH and LH bearing races.
- Use a new O-ring and gasket.
- Replace the oil seal with a new part at every disassembly.
- Be careful not to mix up the oil seal RH and LH.
- Apply differential gear oil to the lips when installing the oil seal.

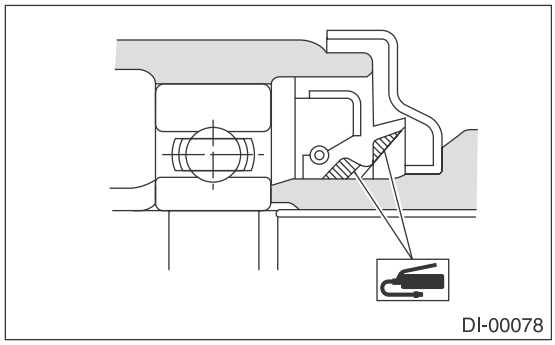

1) Adjusting preload for front and rear bearings

NOTE:
Adjust the bearing preload between front and rear bearings with spacer and washer. Pinion height adjusting washer is not affected by this adjustment. The adjustment must not be carried out with oil seal inserted.

(1) Install the rear bearing race into the differential carrier using ST1 and ST2.

ST1 398477701 HANDLE
ST2 398477703 DRIFT 2

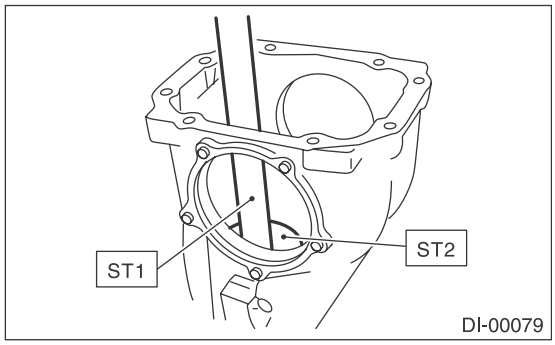

(2) Install the front bearing race to the differential carrier using ST1 and ST2.

ST1 398477701 HANDLE
ST2 398477702 DRIFT

(3) Insert the ST1 into carrier with the pinion height adjusting washer and rear bearing cone fitted onto it.

NOTE:
- If tooth contact (drive pinion, hypoid driven gear) is normal in the inspection before disassembling, verify that the washer is not deformed, and then reuse the used washer.
- Use new rear bearing cone.

(4) Install the preload adjusting spacer & washer, front bearing cone, ST2, companion flange, and washer & self-locking nut.

ST1 398507702 DUMMY SHAFT
ST2 398507703 DUMMY COLLAR

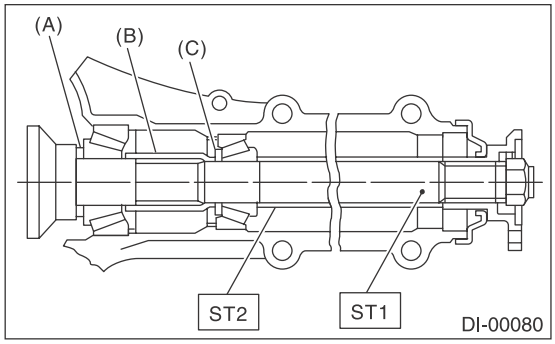

(A) Pinion height adjusting washer
(B) Preload adjusting spacer
(C) Preload adjusting washer

(5) Turn the ST1 by hand to smooth the bearing, and tighten the self-locking nut while measuring the initial load or initial torque with a spring scale or torque wrench. Select the preload adjusting washer and spacer so that the specified preload is obtained when nut is tightened to the specified torque.

NOTE:
- Use a new self-locking nut.
- Measure the preload in direction of tangent to the flange.
- Be careful not to give excessive preload.
- When tightening the self-locking nut, lock ST1 with ST2 as shown in the figure.

ST1 398507702 DUMMY SHAFT
ST2 398507704 BLOCK

Tightening torque:
181.5 N·m (18.5 kgf-m, 133.9 ft-lb)

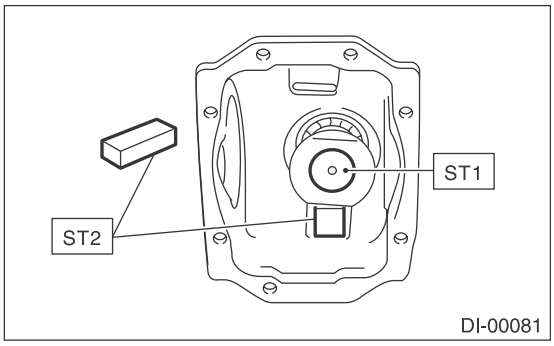

Initial load:
17.7 — 38.8 N (1.8 — 4.0 kgf, 4.0 — 8.7 lb)

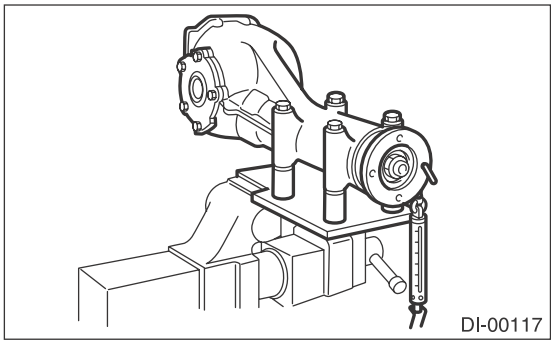

Initial torque:
0.67 — 1.47 N·m (0.07 — 0.15 kgf-m, 0.49 — 1.08 ft-lb)

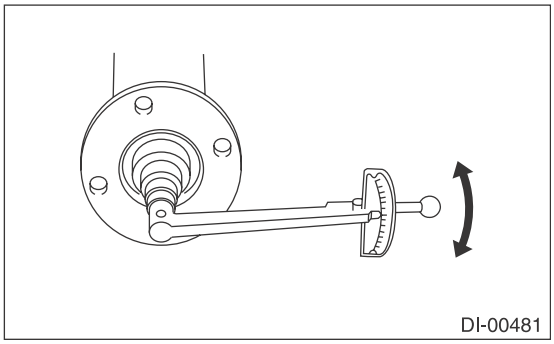

Preload adjusting washer	
Part number	Thickness mm (in)
383705200	2.59 (0.1020)
383715200	2.57 (0.1012)
383725200	2.55 (0.1004)
383735200	2.53 (0.0996)
383745200	2.51 (0.0988)
383755200	2.49 (0.0980)
383765200	2.47 (0.0972)
383775200	2.45 (0.0965)
383785200	2.43 (0.0957)
383795200	2.41 (0.0949)
383805200	2.39 (0.0941)
383815200	2.37 (0.0933)
383825200	2.35 (0.0925)
383835200	2.33 (0.0917)
383845200	2.31 (0.0909)

Preload adjusting spacer	
Part number	Length mm (in)
383695201	56.2 (2.213)
383695202	56.4 (2.220)
383695203	56.6 (2.228)
383695204	56.8 (2.236)
383695205	57.0 (2.244)
383695206	57.2 (2.252)

2) Adjusting drive pinion height:
Adjust the drive pinion height with washer installed between the rear bearing cone and the back of pinion gear.
(1) Attach the ST2.

NOTE:
At this time, install a pinion height adjusting washer, temporarily selected, or the same as that used before. Measure and record the thickness.
ST1 398507702 DUMMY SHAFT
ST2 398507701 DIFFERENTIAL CARRIER GAUGE
ST3 398507703 DUMMY COLLAR

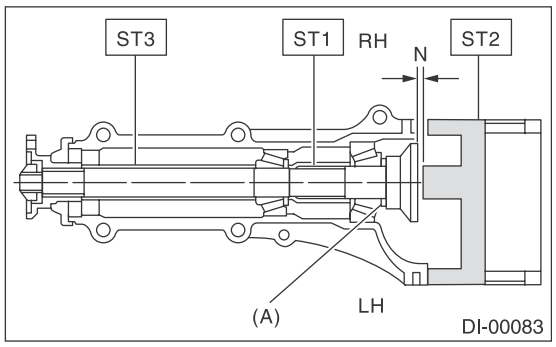

N Measured value

(A) Pinion height adjusting washer

(2) Measure the clearance “N” between the end of ST2 and the end surface of ST1 by using a thickness gauge.

NOTE:
Make sure there is no clearance between the case and ST2.
ST1 398507702 DUMMY SHAFT
ST2 398507701 DIFFERENTIAL CARRIER GAUGE

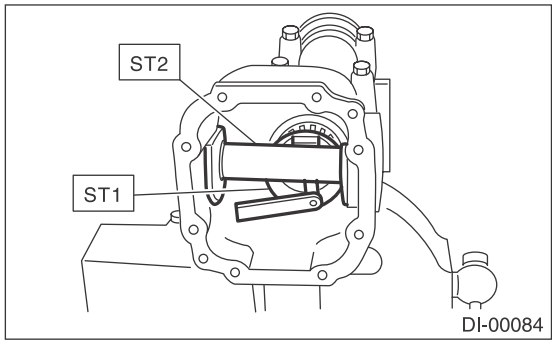

(3) Obtain the thickness of pinion height adjusting washer to be inserted from the following formula, and replace the temporarily installed washer with this one.
T = To + N – (H × 0.01) – 0.20 mm (0.0079 in)

NOTE:
Use copies of this page.

T	Thickness of pinion height adjusting washer mm (in)
To	Thickness of washer temporarily inserted mm (in)
N	Clearance measured by thickness gauge mm (in)
H	Figure marked on drive pinion head
Memo:	

(Example of calculation)
To = 2.20 mm (0.0866 in) + 1.20 mm (0.0472 in) = 3.40 mm (0.1339 in)
N = 0.23 mm (0.0091 in)
H = + 1
T = 3.40 mm (0.1339 in) + 0.23 mm (0.0091 in) – 0.01 mm (0.0004 in) – 0.20 mm (0.0079 in) = 3.42 mm (0.1346 in)
Thickness = 3.42 mm (0.1346 in)
Therefore use washer 383605200.

Pinion height adjusting washer	
Part number	Thickness mm (in)
383495200	3.09 (0.1217)
383505200	3.12 (0.1228)
383515200	3.15 (0.1240)
383525200	3.18 (0.1252)
383535200	3.21 (0.1264)
383545200	3.24 (0.1276)
383555200	3.27 (0.1287)
383565200	3.30 (0.1299)
383575200	3.33 (0.1311)
383585200	3.36 (0.1323)
383595200	3.39 (0.1335)
383605200	3.42 (0.1346)
383615200	3.45 (0.1358)
383625200	3.48 (0.1370)
383635200	3.51 (0.1382)
383645200	3.54 (0.1394)
383655200	3.57 (0.1406)
383665200	3.60 (0.1417)
383675200	3.63 (0.1429)
383685200	3.66 (0.1441)

3) Install the selected pinion height adjusting washer on drive pinion, and press the rear bearing cone into position with ST.
ST 398177700 INSTALLER

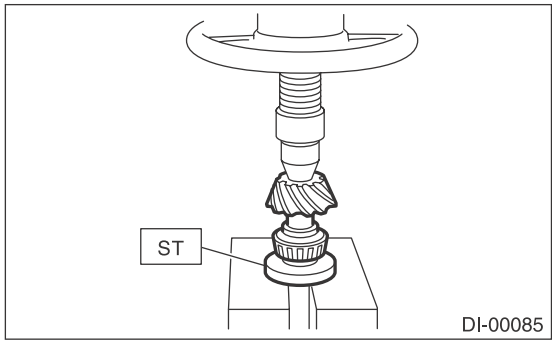

4) Insert the drive pinion into the differential carrier, and install the preselected preload adjusting spacer and washer.

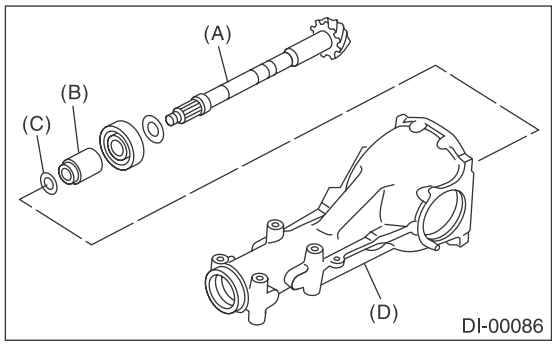

(A) Drive pinion
(B) Preload adjusting spacer
(C) Preload adjusting washer
(D) Differential carrier

5) Press-fit the front bearing cone into case with ST1, ST2 and ST3.
ST1 398507703 DUMMY COLLAR
ST2 399780104 WEIGHT
ST3 899580100 INSTALLER

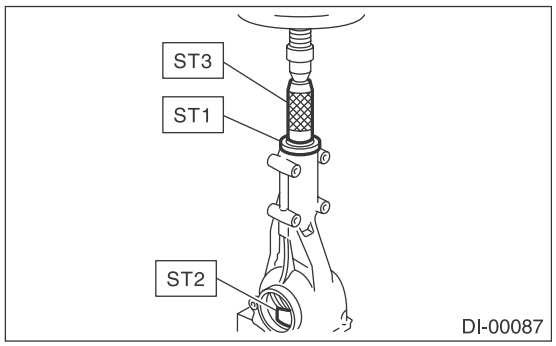

6) Insert the spacer, then press-fit the pilot bearing with ST1 and ST2.
ST1 399780104 WEIGHT
ST2 899580100 INSTALLER

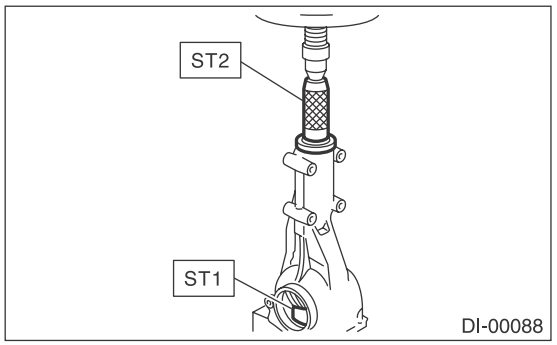

7) Using the ST, install the oil seal.

NOTE:
- Use a new oil seal.
- Press-fit until the oil seal end comes 1 mm (0.04 in) inward from end of carrier.
- Apply differential gear oil to the oil seal lips.

ST 498447120 INSTALLER

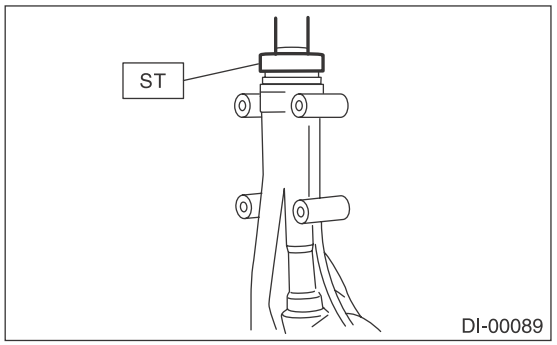

8) Press-fit the companion flange with ST1 and ST2.

NOTE:
Be careful not to damage the bearing.
ST1 899874100 INSTALLER
ST2 399780104 WEIGHT

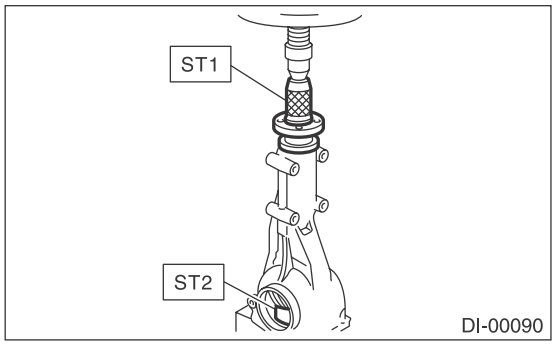

9) Apply seal material on the drive pinion shaft thread and new self-locking nut seat.

SEAL MATERIAL:
THREE BOND 1324 (Part No. 004403042) or equivalent

10) Attach the new self-locking nut and use the ST to fix the companion flange in place, then tighten the self-locking nut.

Tightening torque:
181.5 N·m (18.5 kgf-m, 133.9 ft-lb)
ST 498427200 FLANGE WRENCH

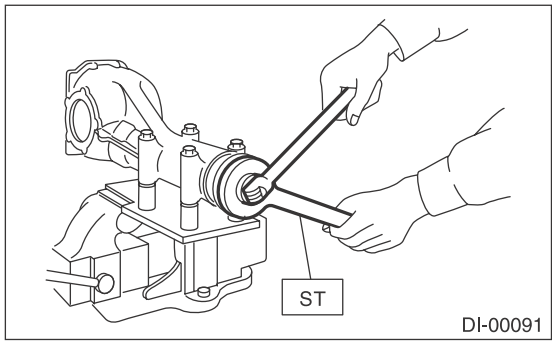

11) Check the initial torque or initial load.

Initial load:
17.7 — 38.8 N·m (1.8 — 4.0 kgf-m, 4.0 — 8.7 ft-lb)

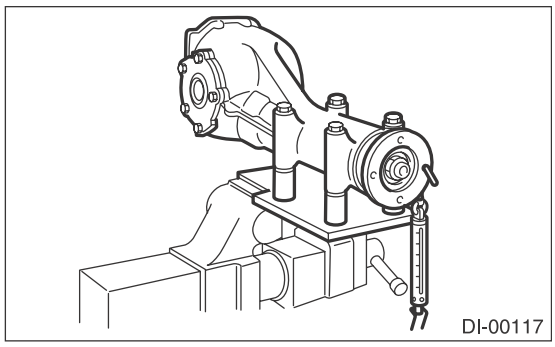

Initial torque:
0.67 — 1.47 N·m (0.07 — 0.15 kgf-m, 0.49 — 1.08 ft-lb)

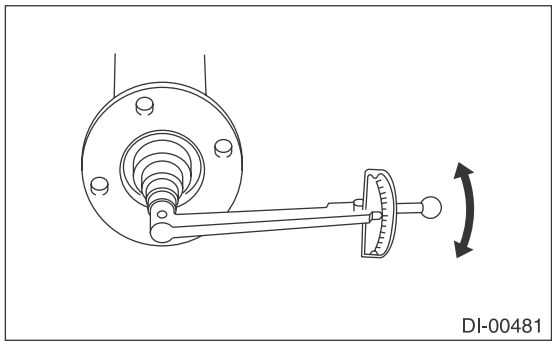

12) Assembling differential case
Install the side gears and pinion mate gears, with their thrust washers and pinion mate shaft, into the differential case.

NOTE:
• Apply gear oil on both sides of the washer and on the side gear shaft before installing.
• Insert the pinion mate shaft into the differential case by aligning the lock pin holes.

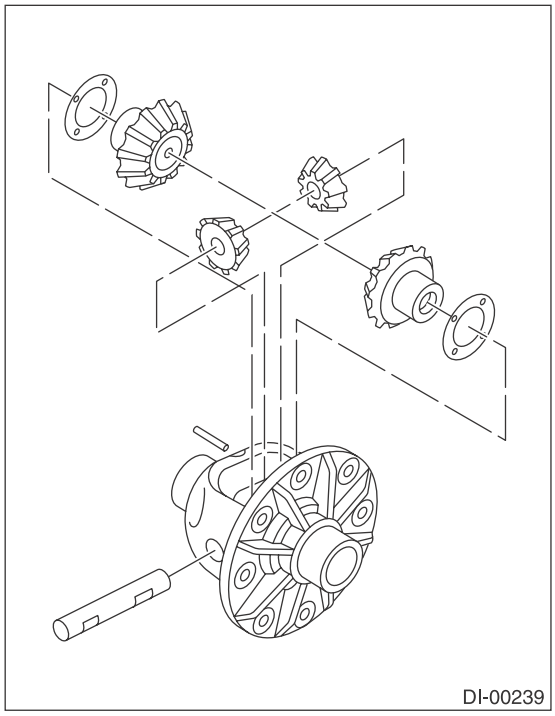

(1) Measure the side gear backlash.

Side gear backlash:
0.10 — 0.20 mm (0.004 — 0.008 in)

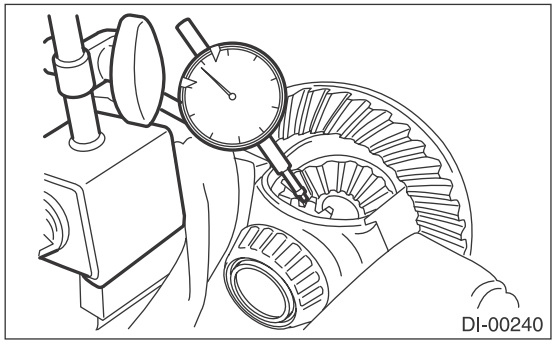

(2) Adjust the backlash as specified by selecting the side gear thrust washers.

Side gear thrust washer	
Part number	Thickness mm (in)
383445201	0.75 — 0.80 (0.0295 — 0.0315)
383445202	0.80 — 0.85 (0.0315 — 0.0335)
383445203	0.85 — 0.90 (0.0335 — 0.0354)

(3) Check the condition of rotation after applying oil to the gear tooth surfaces and thrust washer surfaces.
(4) After inserting the pinion shaft lock pin into differential case, stake the both sides of the hole to prevent pin from falling off.

13) Install the driven gear to differential case.

NOTE:
• Before installing bolts, apply a sealing material to bolt threads.

SEAL MATERIAL:
THREE BOND 1324 (Part No. 004403042) or equivalent
• Make sure there is no clearance between the differential case and driven gear.
• Tighten diagonally.

Tightening torque:
103 N·m (10.5 kgf-m, 76.0 ft-lb)

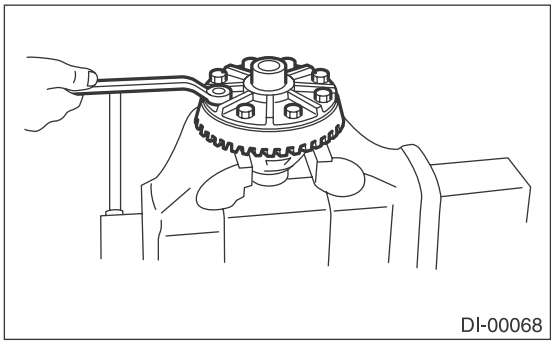
DI-00068

14) Using the ST, press-fit the side bearing to the differential case.
ST 398487700 DRIFT

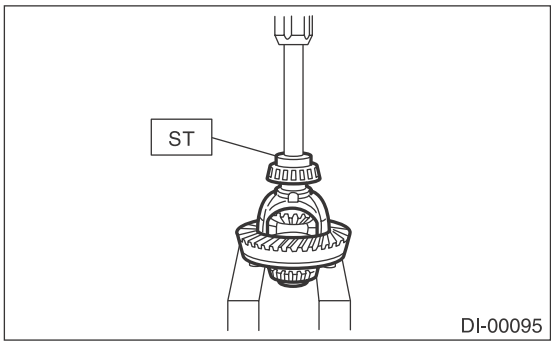

DI-00095

15) Using the ST, press-fit the side bearing outer race to the side retainer.
ST 398417700 DRIFT

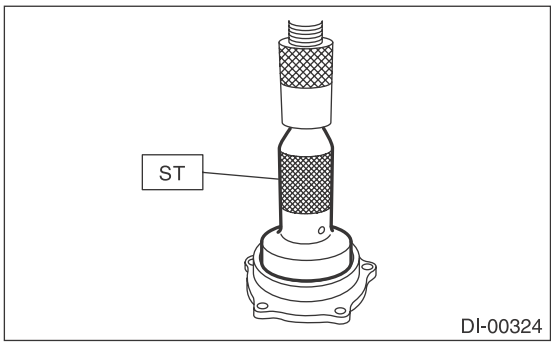

DI-00324

16) Side retainer shim adjustment
(1) The hypoid driven gear backlash and side bearing preload can be adjusted by the side retainer shim thickness.

(2) Install the differential case assembly into differential carrier in the reverse order of disassembly.

NOTE:
Be careful not to hit the teeth against the case.

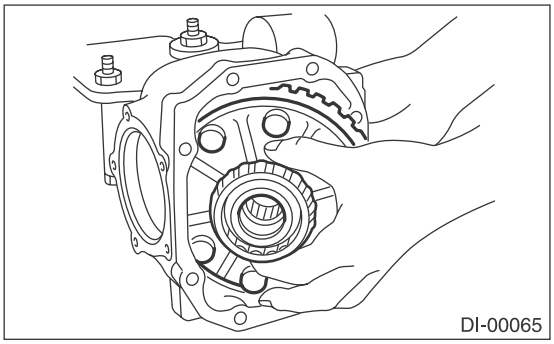
DI-00065

(3) Install the side retainer shim and O-ring.

NOTE:
• Use new O-rings.
• Be careful not to mix up the side retainer shim RH and LH.
• Replace broken or corroded side retainer shims with a new part of the same thickness.

Side retainer shim	
Part number	Thickness mm (in)
383475201	0.20 (0.0079)
383475202	0.25 (0.0098)
383475203	0.30 (0.0118)
383475204	0.40 (0.0157)
383475205	0.50 (0.0197)

(4) Align the arrow mark on the differential carrier with the arrow mark on the side retainer when installing the side retainer.

NOTE:
Be careful that the side bearing outer race is not damaged by the bearing roller.

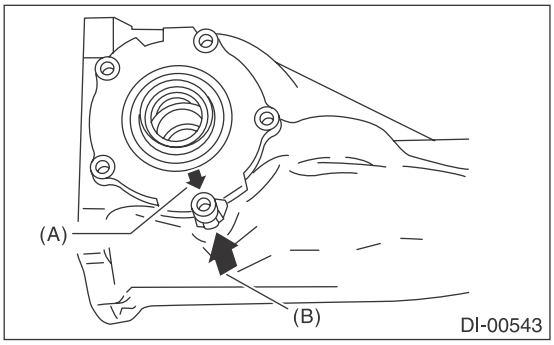

DI-00543

(A) Arrow mark (on the side retainer)
(B) Arrow mark (on the differential carrier)

(5) Tighten the side retainer bolt.

Tightening torque:
10.5 N·m (1.1 kgf-m, 7.7 ft-lb)

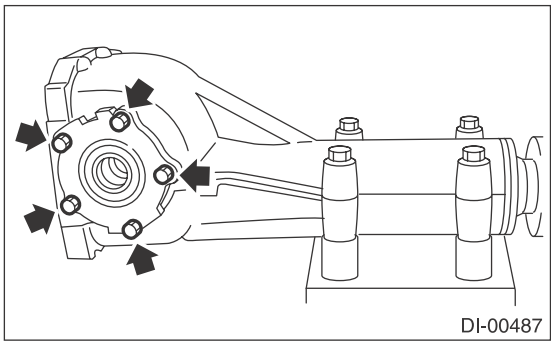

(6) Measure the hypoid driven gear to drive pinion backlash. Set the magnet base on differential carrier. Align the contact point of dial gauge with tooth face of hypoid driven gear, and move hypoid driven gear while holding drive pinion still. Read the value indicated on dial gauge. If the backlash is outside the standard range, adjust the side retainer shim by the following method.

•When backlash is less than 0.1 mm (0.004 in):
Reduce the thickness of shim on the back side of the hypoid driven gear and increase the thickness of shims on the teeth side of the hypoid driven gear.

•When backlash exceeds 0.2 mm (0.008 in):
Increase the thickness of shim on the back side of the hypoid driven gear and reduce the thickness of shims on the teeth side of the hypoid driven gear.

Backlash:
0.10 — 0.20 mm (0.004 — 0.008 in)

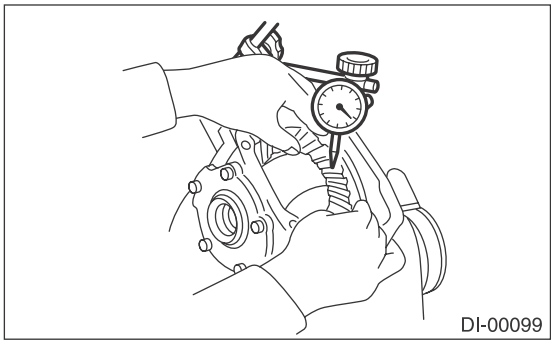

(7) Measure the total preload of the drive pinion. If the total preload is not within specification, adjust the thickness of side retainer shims, increasing/reducing both shims by an even amount at a time.

Total preload:
20.7 — 54.4 N (2.1 — 5.5 kgf, 4.7 — 12.2 lbf)

17) Recheck the backlash between the hypoid driven gear and drive pinion.

Backlash:
0.10 — 0.20 mm (0.004 — 0.008 in)

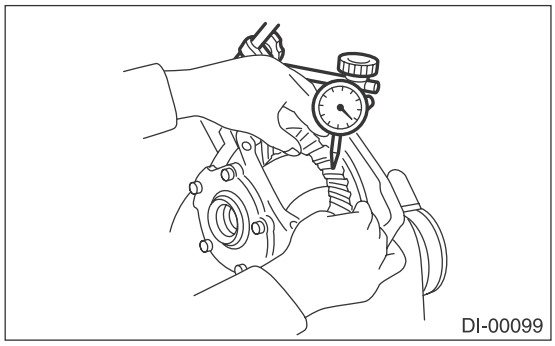

18) Check the hypoid driven gear runout on its back surface, and make sure that the pinion and hypoid driven gear rotate smoothly. If the hypoid driven gear runout on its back surface exceeds the specification, check for any foreign objects between the hypoid driven gear and differential case, and for any deformation of the case or gear.

Hypoid driven gear back surface runout:
0.05 mm (0.002 in)

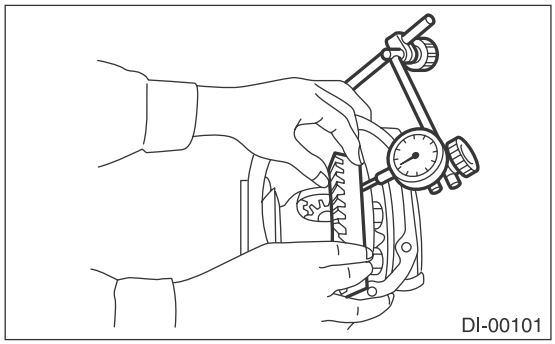

19) Checking and adjusting the tooth contact of hypoid driven gear

(1) Apply lead-free red dye evenly on the both sides of three to four teeth of the hypoid driven gear. Check the contact pattern after rotating the hypoid driven gear several revolutions back and forth until a definite contact pattern appears on the hypoid driven gear.

(2) When the contact pattern is not correct, readjust.

NOTE:
Be sure to wipe off the lead-free red dye completely after the adjustment is completed.

• Correct tooth contact

Check item: Tooth contact pattern is slightly shifted toward toe side under no-load rotation. (When driving, it moves towards the heel side.)

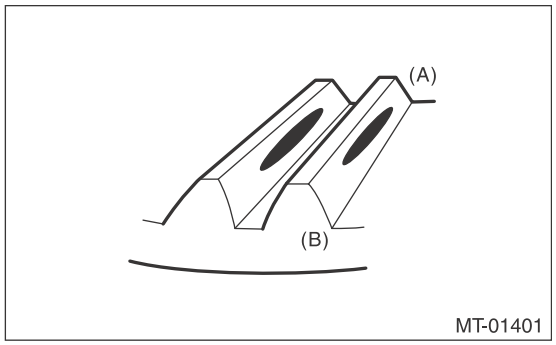

(A) Toe side
(B) Heel side

• Face contact

Check item: Backlash is too large.

Contact pattern

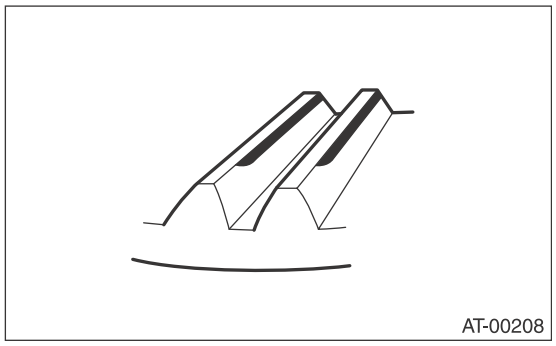

Corrective action: Increase thickness of pinion height adjusting washer according to the procedure for bringing drive pinion close to hypoid driven gear side.

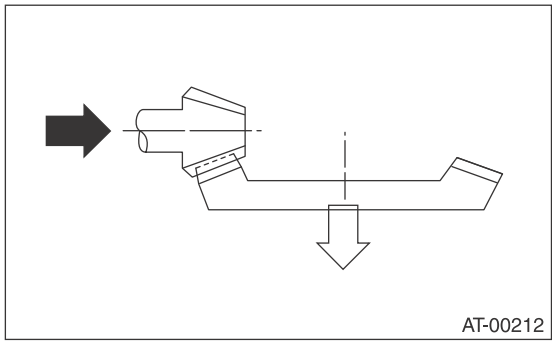

• Flank contact

Check item: Backlash is too small.

Contact pattern

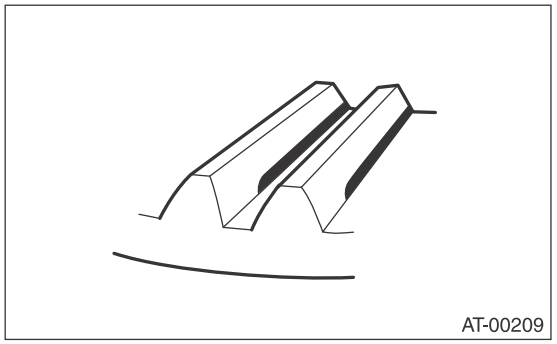

Corrective action: Reduce the thickness of pinion height adjusting washer according to the procedure for bringing drive pinion away from hypoid driven gear.

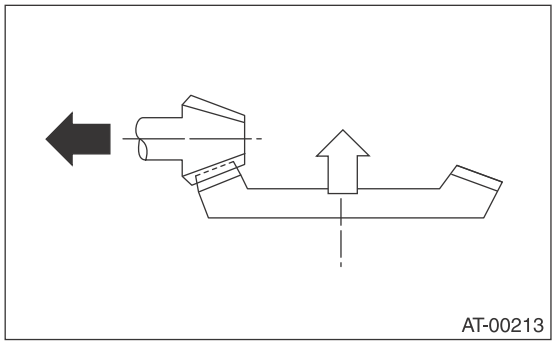

• Toe contact (inside contact)
Check item: Teeth contact area is too small.
Contact pattern

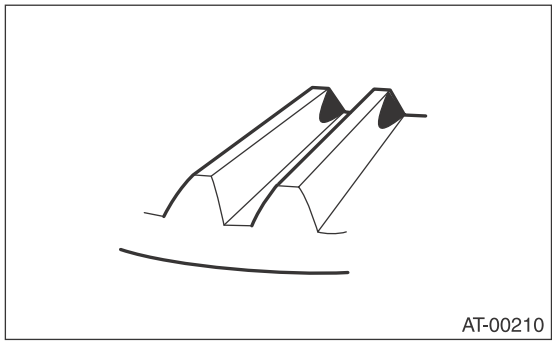

Corrective action: Reduce the thickness of pinion height adjusting washer according to the procedure for bringing drive pinion away from hypoid driven gear.

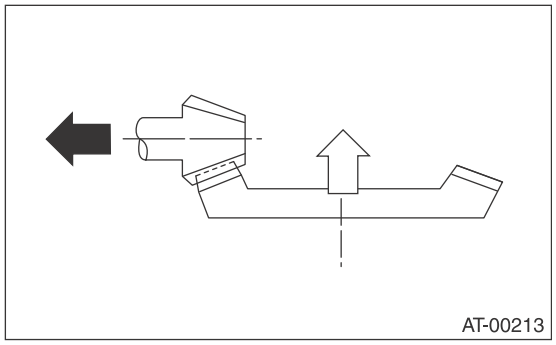

• Heel contact (outside end contact)
Check item: Teeth contact area is too small.
Contact pattern

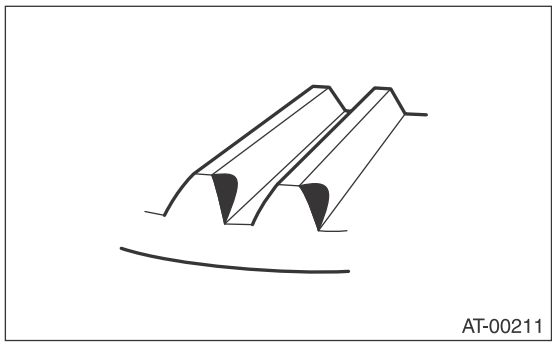

Corrective action: Increase thickness of pinion height adjusting washer according to the procedure for bringing drive pinion close to hypoid driven gear side.

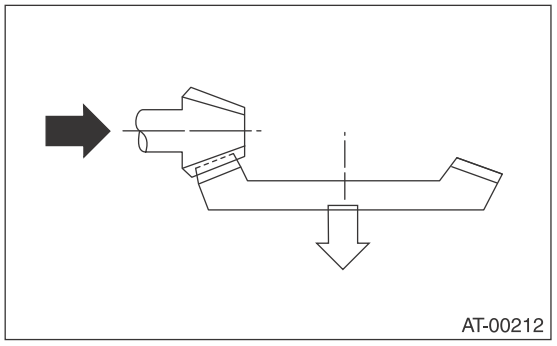

20) If correct tooth contact is not obtained, once again adjust the drive pinion height by changing the RH and LH side retainer shims and the hypoid gear backlash.
(1) Drive pinion height

ST1	398507702	DUMMY SHAFT
ST2	398507701	DIFFERENTIAL CARRIER GAUGE

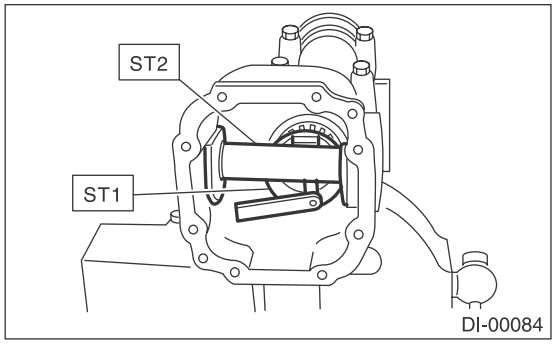

T = To + N – (H × 0.01) – 0.20 mm (0.008 in)

T	Thickness of pinion height adjusting washer mm (in)
To	Thickness of washer temporarily inserted mm (in)
N	Clearance measured by thickness gauge mm (in)
H	Figure marked on drive pinion head

(2) Hypoid gear backlash

Backlash:
0.10 — 0.20 mm (0.004 — 0.008 in)

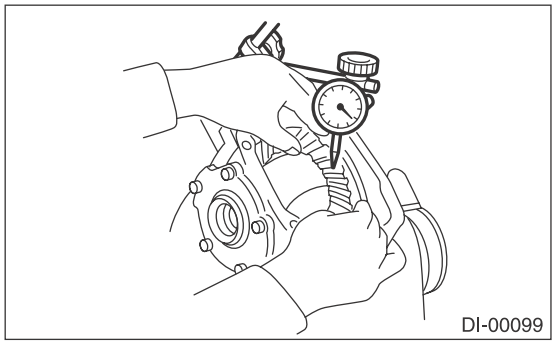

21) Remove the RH and LH side retainers.
22) Install the O-ring to left and right side retainers.

NOTE:
Use new O-rings.
23) Install the oil seal to the side retainer of both sides. <Ref. to DI-74, REPLACEMENT, Rear Differential Side Oil Seal.>
24) Align the arrow mark on the differential carrier with the arrow mark on the side retainer when installing the side retainer.

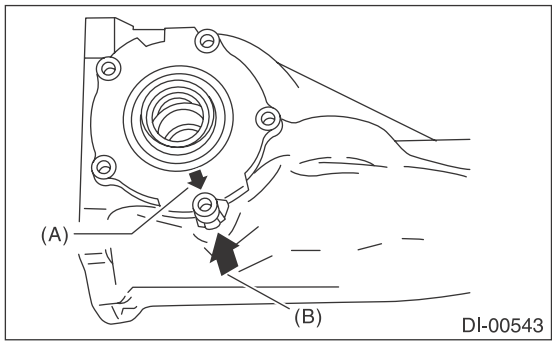

(A) Arrow mark (on the side retainer)
(B) Arrow mark (on the differential carrier)

25) Apply liquid gasket to the bolts indicated by arrows, and tighten the bolts.

Liquid gasket:
THREE BOND 1110B (Part No. K0879Y0020) or equivalent

Tightening torque:
10.5 N·m (1.1 kgf-m, 7.7 ft-lb)

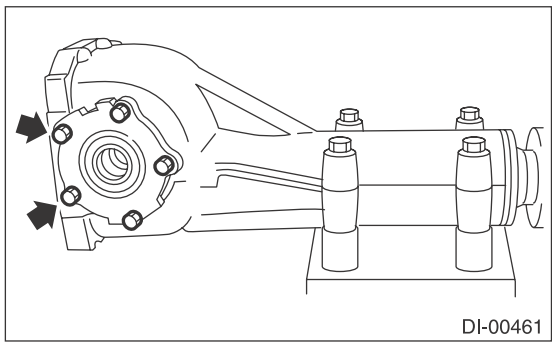

26) Install the gasket and the rear cover.

NOTE:
Use a new gasket.

Tightening torque:
29.5 N·m (3.0 kgf-m, 21.8 ft-lb)

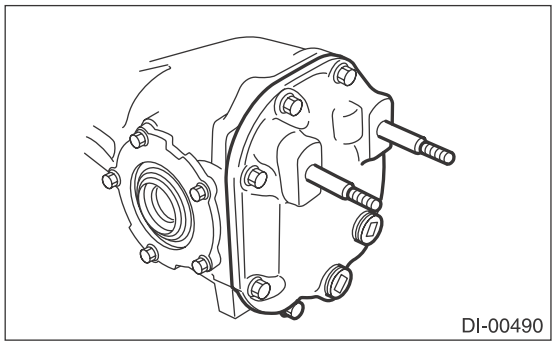

27) Install the air breather cap.

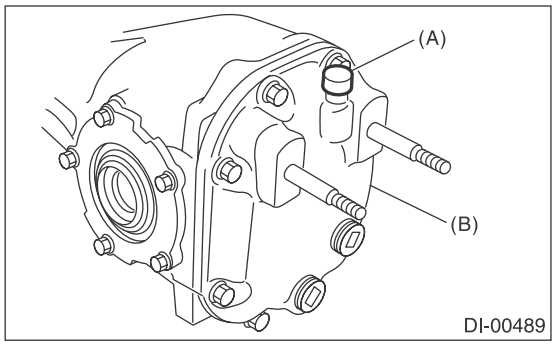

(A) Air breather cap
(B) Rear cover

28) Install the oil drain plug.

NOTE:
Apply liquid gasket to the oil drain plug.

Liquid gasket:
THREE BOND 1105 (Part No. 004403010) or equivalent

Tightening torque:
49 N·m (5.0 kgf-m, 36.1 ft-lb)
29) Install the oil filler plug.

E: INSPECTION

Wash all the disassembled parts clean, and examine them for wear, damage and other defects. Repair or replace the defective parts as necessary.
1) Hypoid driven gear and drive pinion
• If there is evidently an abnormal tooth contact, find out the cause and adjust until the teeth contact correctly. Replace the gear if there is an excessive worn or an incapable adjustment.
• If crack, cutout or seizure is found, replace the parts as a set. Slight damage of some teeth can be corrected by oil stone or the like.
2) Side gear and pinion mate gear
• Replace if cracks, scoring or other defects are evident on the tooth surface.
• Replace if thrust washer contact surface is worn or seized. Slight damages of the surface can be corrected by oil stones or equivalent.
3) Bearing
Replace if seizure, peeling, wear, rust, dragging during rotation, abnormal noise or other defect is evident.
4) Thrust washer of the side gear and pinion mate gear:
Replace if seized, flawed, abnormally worn or having other defects.
5) Oil seal
Replace if deformed or damaged, and at every disassembling.
6) Differential carrier
Replace if the bearing bores are worn or damaged.
7) Differential case
Replace if its sliding surfaces are abnormally worn, burned, or cracked.
8) Companion flange
Replace if the oil seal lip contact surface shows cracking.

1. SIDE GEAR BACKLASH

Using a dial gauge, check the backlash of side gear.

Side gear backlash:
0.10 — 0.20 mm (0.004 — 0.008 in)

If the side gear backlash is not within the specification, select the side gear thrust washer and adjust the side gear backlash as specified.

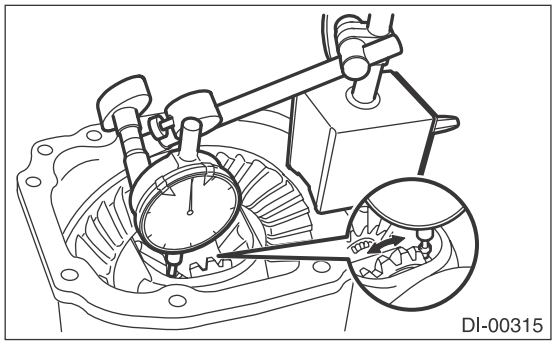
DI-00315

2. HYPOID DRIVEN GEAR BACKLASH

Using a dial gauge, check the backlash of hypoid driven gear.

Hypoid driven gear backlash:
0.10 — 0.20 mm (0.004 — 0.008 in)

If the hypoid driven gear backlash is not within the specification, adjust the side bearing preload or repair if necessary.

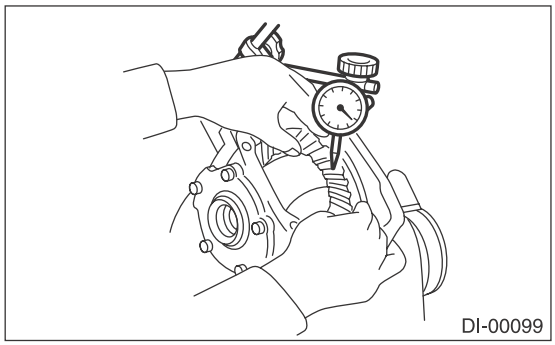
DI-00099

3. HYPOID DRIVEN GEAR RUNOUT ON ITS BACK SURFACE

Using a dial gauge, check the hypoid driven gear back surface runout.

Hypoid driven gear back surface runout:
0.05 mm (0.002 in)

If the hypoid driven gear runout exceeds 0.05 mm (0.002 in), replace the hypoid driven gear.

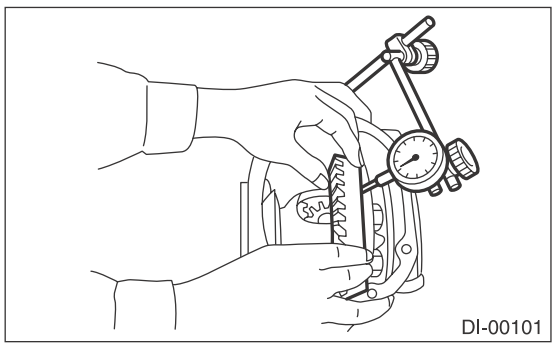
DI-00101

4. TOOTH CONTACT BETWEEN HYPOID DRIVEN GEAR AND DRIVE PINION

Inspect the tooth contact between the hypoid driven gear and drive pinion. <Ref. to DI-33, ASSEMBLY, Rear Differential (T-type).>

5. TOTAL PRELOAD

Using a spring scale, check the total preload.

Total preload:
20.7 — 54.4 N (2.1 — 5.5 kgf, 4.7 — 12.2 lb)

If the total preload is not within the specification, adjust the side retainer shim.

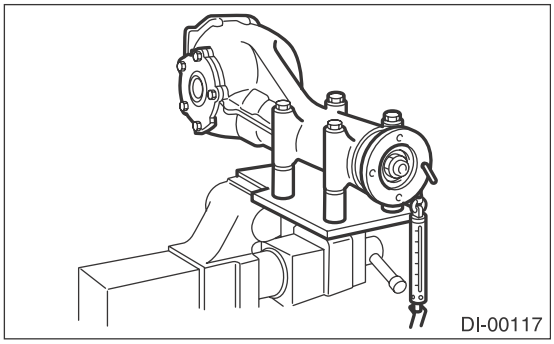
DI-00117

6. COMPANION FLANGE

1) If rust or dirt is attached to the companion flange, remove them.
2) Set a dial gauge at a companion flange surface (mating surface of propeller shaft and companion flange), and then measure the companion flange runout.

Limit of runout:
0.08 mm (0.003 in)

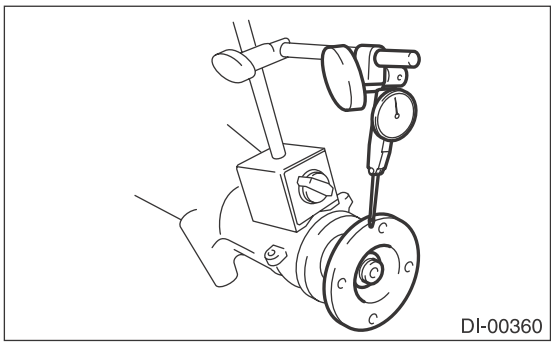
DI-00360

3) Set the gauge inside of the companion flange, and measure the runout.

Limit of runout:
0.08 mm (0.003 in)

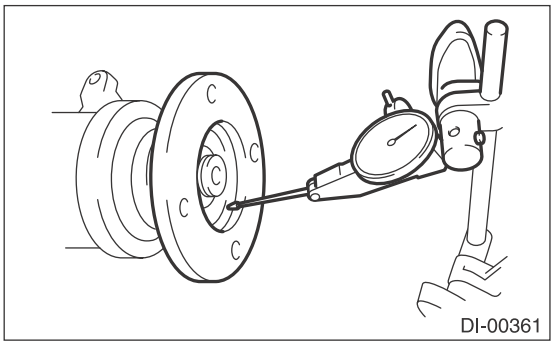
DI-00361

4) If either runout exceeds the limit, move the phase of companion flange and drive pinion 90° each, and find the point where the runout is within the limit.
5) If the runout exceeds the limit even after changing the phase, replace the companion flange and recheck the runout.
6) If the runout exceeds the limit after replacing the companion flange, the drive pinion may be assembled incorrectly or bearing is faulty.

F: ADJUSTMENT

1. SIDE GEAR BACKLASH

Adjust the side gear backlash. <Ref. to DI-33, ASSEMBLY, Rear Differential (T-type).>

2. HYPOID DRIVEN GEAR BACKLASH

Adjust hypoid driven gear backlash. <Ref. to DI-33, ASSEMBLY, Rear Differential (T-type).>

3. TOOTH CONTACT BETWEEN HYPOID DRIVEN GEAR AND DRIVE PINION

Adjust the tooth contact between hypoid driven gear and drive pinion gear. <Ref. to DI-33, ASSEMBLY, Rear Differential (T-type).>

4. TOTAL PRELOAD

Adjust the side retainer shim. <Ref. to DI-33, ASSEMBLY, Rear Differential (T-type).>

5. Rear Differential (VA-type)

A: REMOVAL

The removal procedure for VA-type is included in “REMOVAL” for T-type. <Ref. to DI-26, REMOVAL, Rear Differential (T-type).>

B: INSTALLATION

The installation procedure for VA-type is included in “INSTALLATION” for T-type. <Ref. to DI-28, INSTALLATION, Rear Differential (T-type).>

C: DISASSEMBLY

1. VA1-TYPE

To detect the real cause of trouble, inspect the following items before disassembling.

- Tooth contact and backlash between hypoid driven gear and drive pinion
- Hypoid driven gear runout on its back surface
- Total preload of drive pinion

1) Set the ST on vise and install the differential assembly to ST.

ST 398217700 ATTACHMENT SET

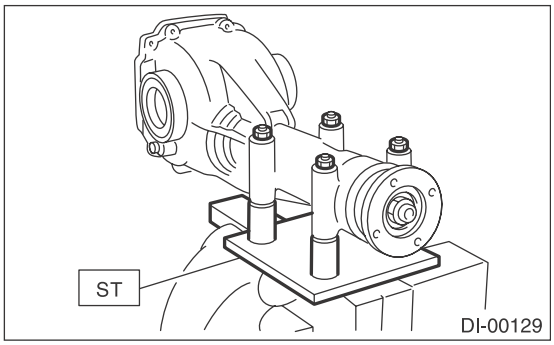

2) Remove the oil drain plug and oil filler plug.

3) Remove the rear cover by removing retaining bolts.

NOTE:
Remove it by tapping with a plastic hammer.

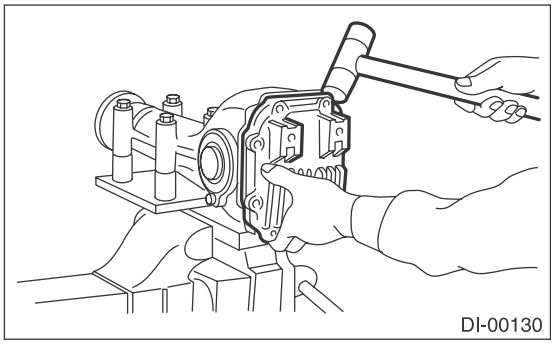

4) Remove the air breather cap.

NOTE:

- Do not attempt to replace the air breather cap unless necessary.
- Whenever the air breather cap is removed, replace it with a new part.

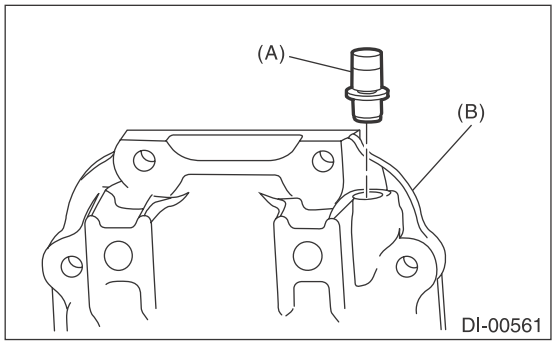

(A) Air breather cap
(B) Rear cover

5) Remove the lock plate RH and LH.

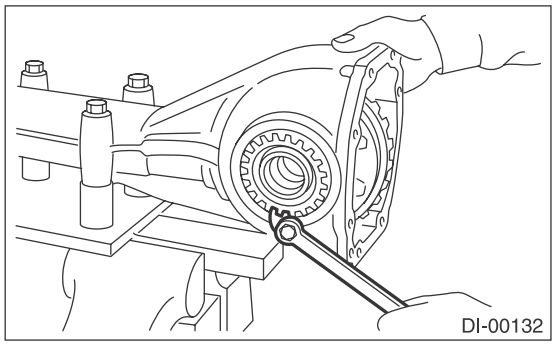

6) Remove the side retainer RH and LH with ST.

NOTE:
When keeping the retainers aside, use labels etc. to avoid confusing the left and right.

ST 18630AA010 WRENCH COMPL RETAINER

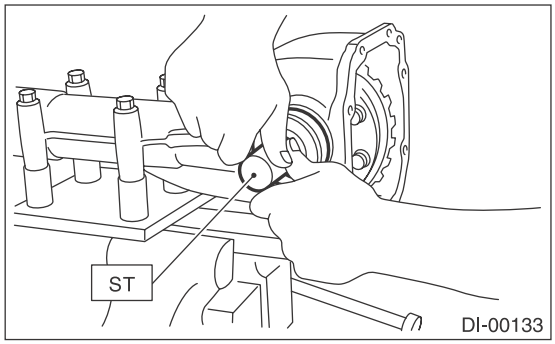

7) Pull out the differential case assembly from differential carrier.

NOTE:
Be careful not to hit the teeth of hypoid driven gear against the case.

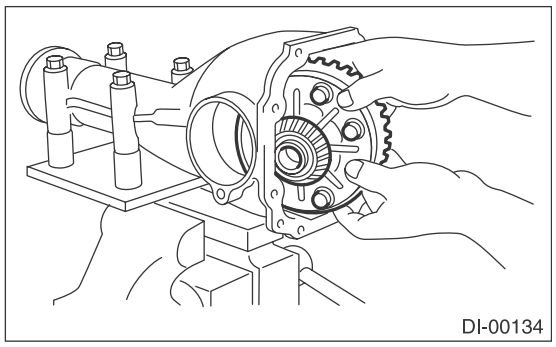

8) Remove the bearing race from side retainer RH and LH with ST1 and ST2.
ST1 499705401 PULLER ASSY
ST2 499705404 SEAT

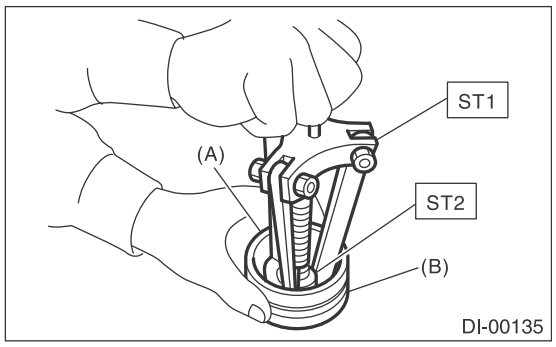

(A) Bearing race
(B) Side retainer

9) Remove the oil seal from the RH and LH side retainers using a screwdriver.

NOTE:
Perform this operation only when changing oil seal.

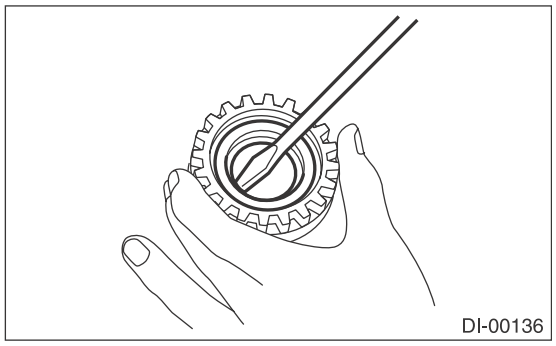

10) Extract the bearing cone with ST1 and ST2.

NOTE:
• Do not attempt to disassemble the parts unless necessary.
• Set the puller so that its claws catch the edge of the bearing cone.
• Store so that the right and left side bearing races and cones are not mixed together.
ST1 899524100 PULLER SET
ST2 399520105 SEAT

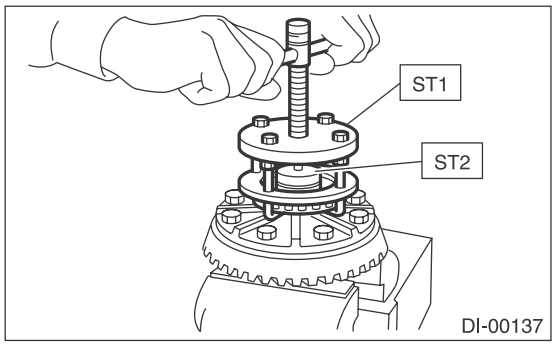

11) Remove the hypoid driven gear by loosening hypoid driven gear bolts.

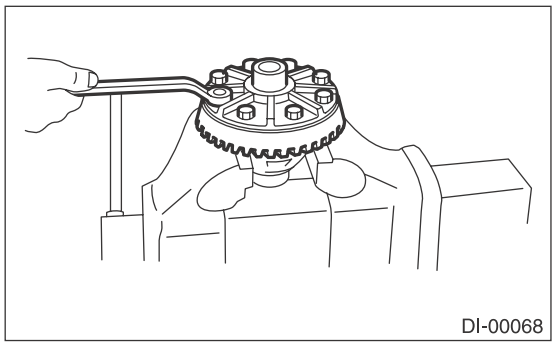

12) Remove the spring pin from hypoid driven gear side using ST.
ST 899904100 STRAIGHT PIN REMOVER

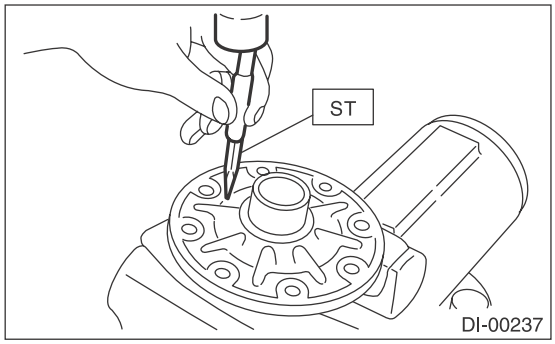

13) Draw out the pinion mate shaft and remove pinion mate gears, side gears and thrust washers.

NOTE:
The gears should be marked or kept separated right and left, and front and rear as well as thrust washers.

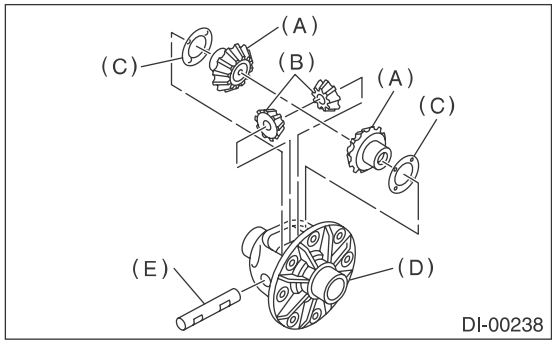

(A) Side gear
(B) Pinion mate gear
(C) Thrust washer
(D) Differential case
(E) Pinion mate shaft

14) Remove the self-locking nut while holding the companion flange with ST.
ST 498427200 FLANGE WRENCH

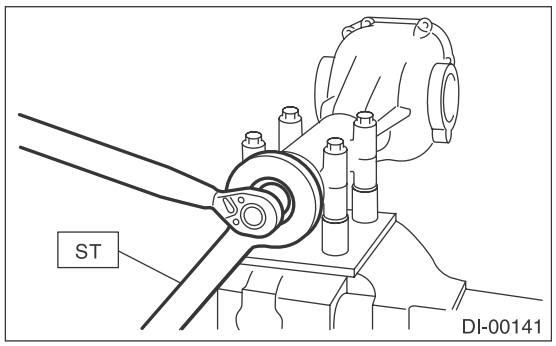

15) Extract the companion flange with a puller.

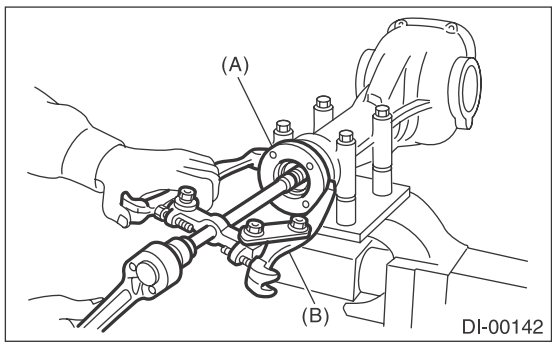

(A) Companion flange
(B) Puller

16) Press the end of drive pinion shaft and extract it together with rear bearing cone, pinion height adjusting washer and washer by using the ST.

NOTE:
Hold the drive pinion so as not to drop it.
ST 398467700 DRIFT

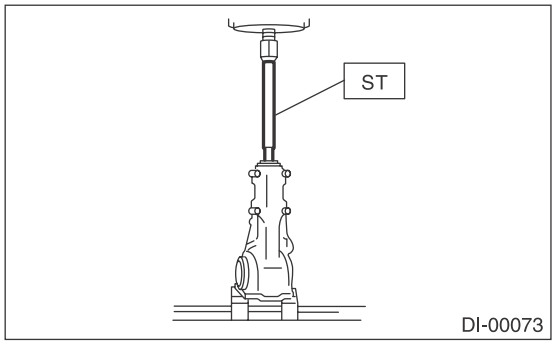

17) Remove the rear bearing cone from drive pinion by supporting the cone with ST.

NOTE:
Place the replacer so that its center-recessed side faces the pinion gear.
ST 498515500 REPLACER

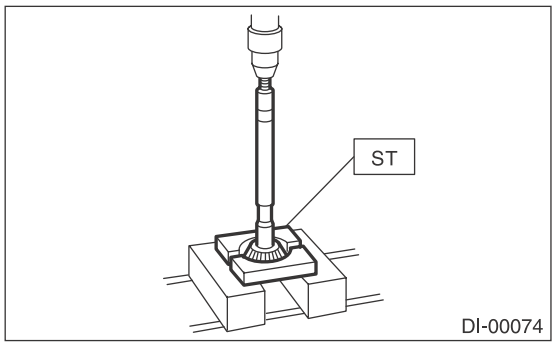

18) Remove the front oil seal from differential carrier using ST.
ST 398527700 PULLER ASSY

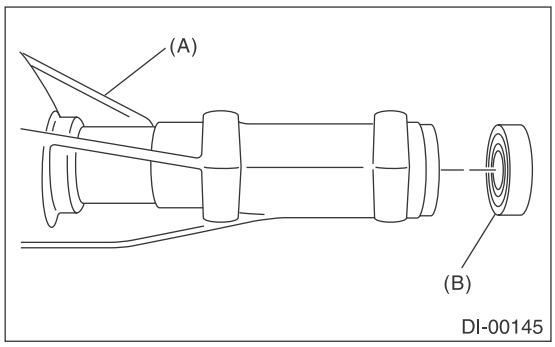

(A) Differential carrier
(B) Front oil seal

19) Remove the pilot bearing together with the front bearing cone and spacer using the ST.
ST 398467700 DRIFT

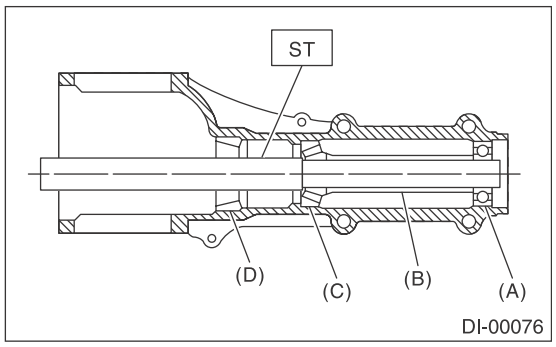

(A) Pilot bearing
(B) SPACER
(C) Front bearing
(D) Rear bearing cup

20) When replacing the bearings, hit out the front bearing cup and rear bearing cup in this order using a brass bar.

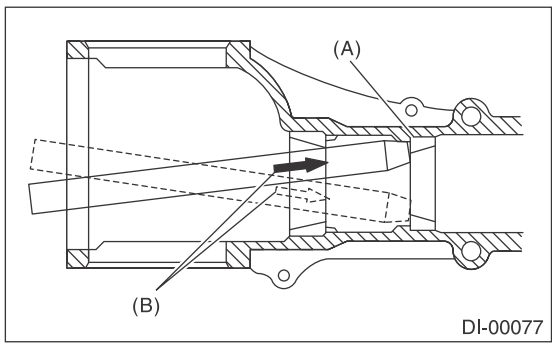

(A) 2 cutout portions along diagonal lines
(B) Tap alternately with brass bar.

2. VA2-TYPE

To detect the real cause of trouble, inspect the following items before disassembling.
• Tooth contact and backlash between hypoid driven gear and drive pinion
• Total preload of drive pinion
1) Set the ST on vise and install the differential assembly to ST.
ST 398217700 ATTACHMENT SET

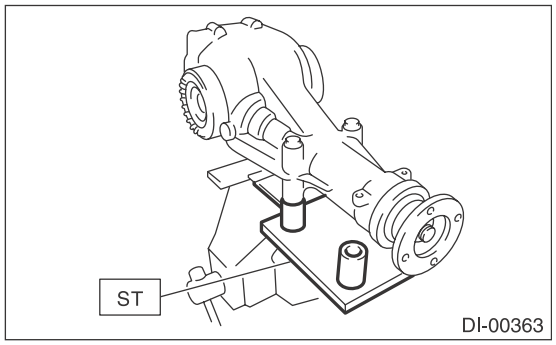

2) Remove the oil drain plug and oil filler plug.
3) Remove the rear cover by removing retaining bolts.

NOTE:
Remove it by tapping with a plastic hammer.

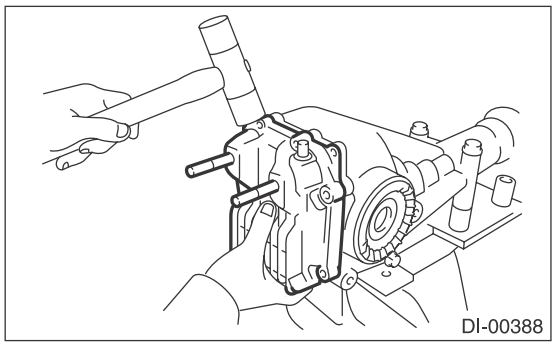

4) Remove the air breather cap.

NOTE:
• Do not attempt to replace the air breather cap unless necessary.
• Whenever the air breather cap is removed, replace it with a new part.

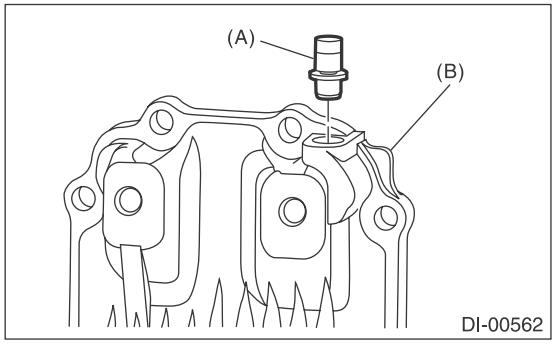

(A) Air breather cap
(B) Rear cover

5) Remove the lock plate RH and LH.

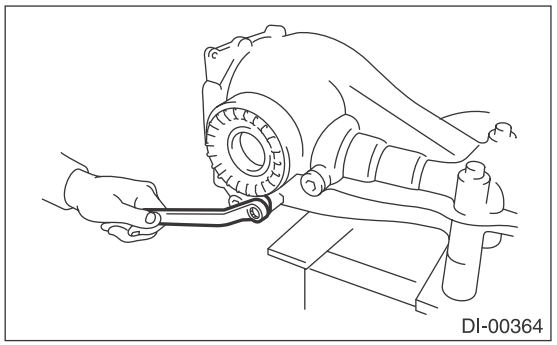

6) Remove the side retainer RH and LH with ST.

NOTE:
When keeping the retainers aside, use labels etc. to avoid confusing the left and right.
ST 18630AA010 WRENCH COMPL RETAINER

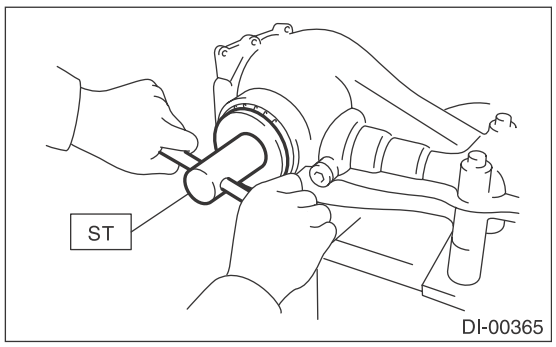

7) Pull out the differential case assembly from differential carrier.

NOTE:
Be careful not to hit the teeth of hypoid driven gear against the differential carrier.

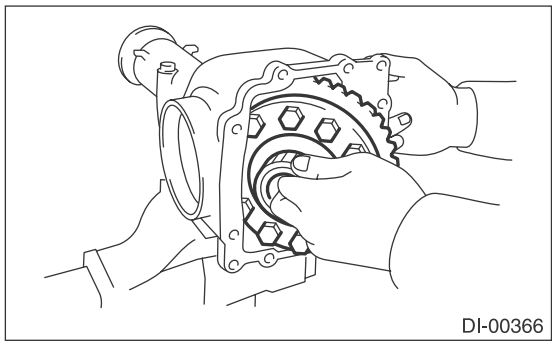

8) Remove the bearing race from side retainer RH and LH with ST and the press.

NOTE:
- Be sure to turn the bolt of the ST by hand.
- Set the puller so that its claws catch the groove of side retainer.

ST 18758AA000 PULLER

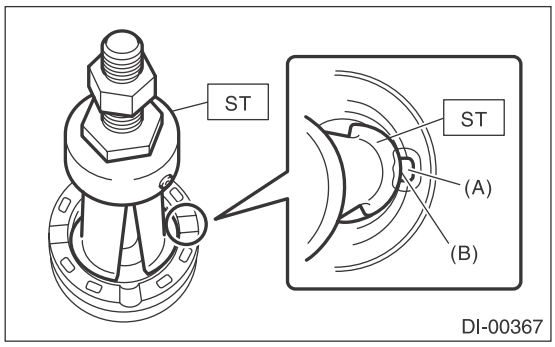

(A) Groove
(B) Claw

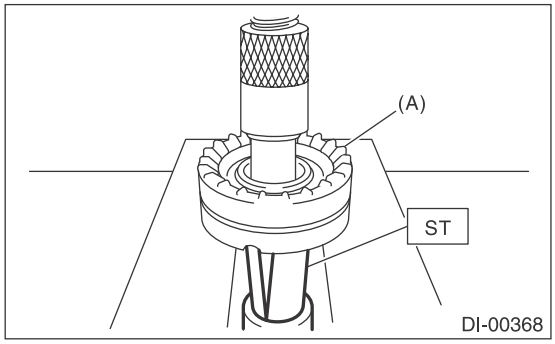

(A) Side retainer

9) Remove the oil seal from side retainer RH and LH using a screwdriver.

NOTE:
Perform this operation only when changing oil seal.

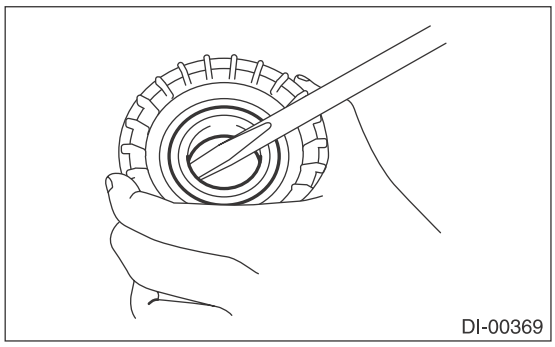

10) Extract the bearing cone with ST1, ST2 and ST3.

NOTE:
- Do not attempt to disassemble the parts unless necessary.

• Never mix up the RH and LH bearing races and cones.

ST1 498077000 REMOVER
ST2 399520105 SEAT
ST3 899864100 REMOVER

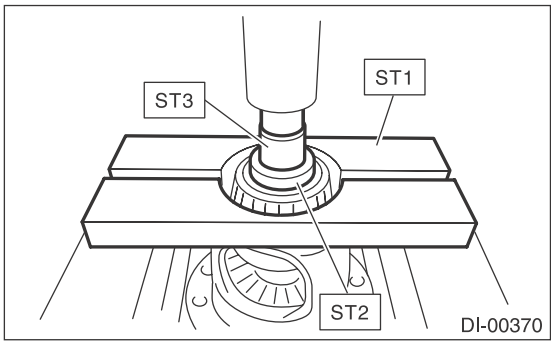

11) Using the ST, loosen the hypoid driven gear bolt and remove the hypoid driven gear.

ST 18270KA020 SOCKET (E20)

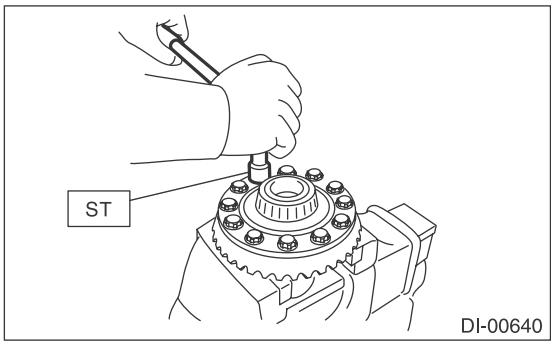

12) Remove the spring pin from hypoid driven gear side using ST.

ST 899904100 STRAIGHT PIN REMOVER

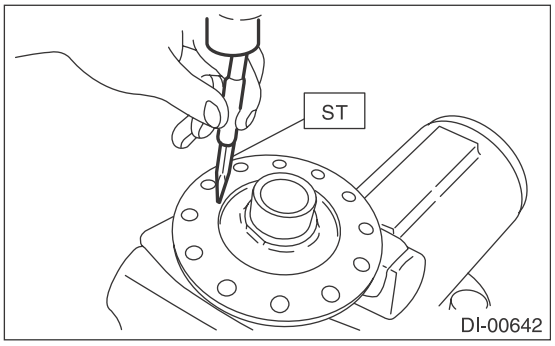

13) Draw out the pinion mate shaft and remove pinion mate gears, side gears and thrust washers.

NOTE:
The gears should be marked or kept separated right and left, and front and rear as well as thrust washers.

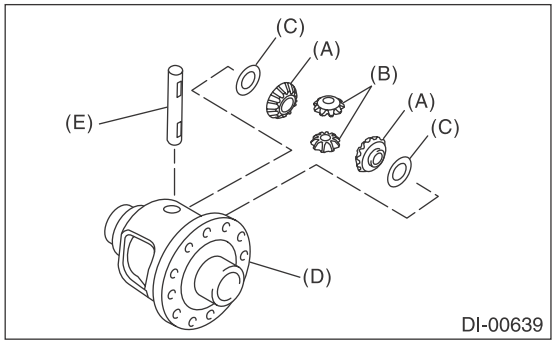

(A) Side gear
(B) Pinion mate gear
(C) Thrust washer
(D) Differential case
(E) Pinion mate shaft

14) Remove the circlip from the side gear.

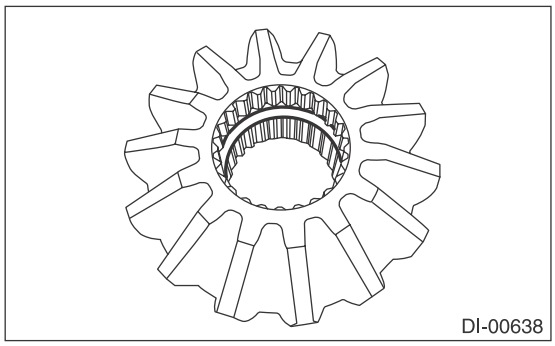

15) Remove the self-locking nut while holding the companion flange with ST.

ST 498427200 FLANGE WRENCH

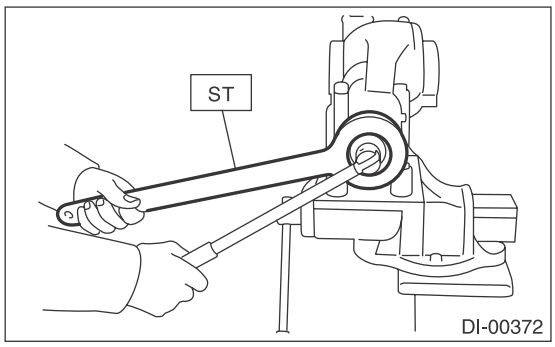

16) Extract the companion flange using a puller.

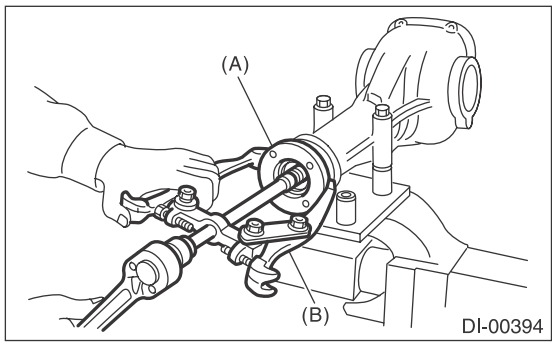

(A) Companion flange
(B) Puller

17) Removes the drive pinion shaft.
18) Remove the rear bearing cone from drive pinion by supporting the cone with ST.

NOTE:
Place the replacer so that its center-recessed side faces the pinion gear.
ST 398517700 REPLACER

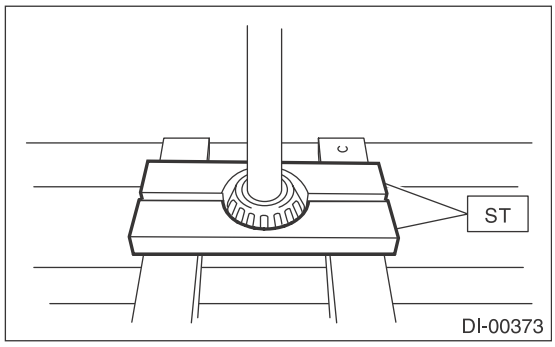

19) Remove the front oil seal from differential carrier using screwdriver.
20) Remove the pilot bearing, front bearing cone and spacer.

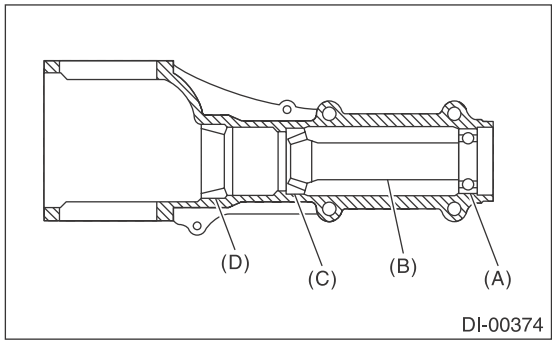

(A) Pilot bearing
(B) SPACER
(C) Front bearing
(D) Rear bearing cup

21) When replacing the bearings, hit out the front bearing cup and rear bearing cup in this order using a brass bar.

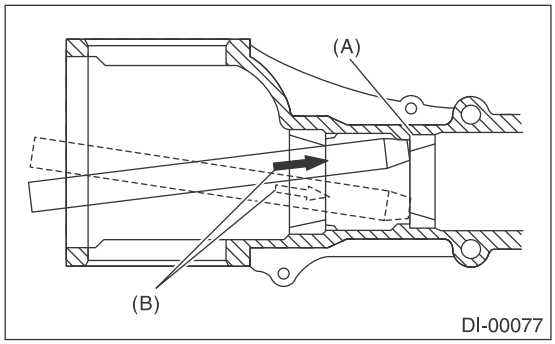

(A) 2 cutout portions along diagonal lines
(B) Tap alternately with brass bar.

D: ASSEMBLY

1. VA1-TYPE

NOTE:
- Assemble in the reverse order of disassembly.
- Check and adjust each part during assembly.
- Use new gaskets and O-rings.
- Keep the shims and washers in order, so that they are not improperly installed.
- Thoroughly clean the surfaces on which the shims, washers and bearings are to be installed.
- Apply gear oil when installing the bearings and thrust washers.
- Be careful not to mix up the RH and LH bearing races.
- Replace the oil seals and O-rings with new parts at every disassembly.
- Apply differential gear oil to the lips when installing the oil seal.
- Be careful not to mix up the differential oil seal RH and LH.

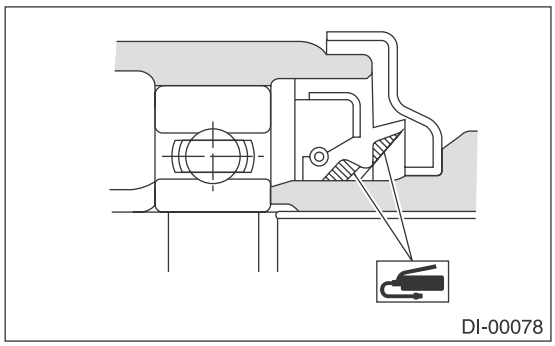

1) Adjusting preload for front and rear bearings

NOTE:
Adjust the bearing preload between front and rear bearings with spacer and washer. Pinion height adjusting washer is not affected by this adjustment. The adjustment must not be carried out with oil seal inserted.

(1) Install the rear bearing race into the differential carrier using ST1 and ST2.

ST1 398477701 HANDLE
ST2 398477702 DRIFT

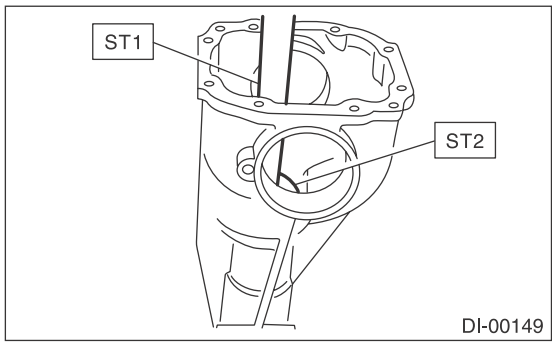

(2) Install the front bearing race to the differential carrier using ST1 and ST2.

ST1 398477701 HANDLE
ST2 498447110 DRIFT

(3) Insert the front bearing cone.

NOTE:
Use new front bearing cone.

(4) Measure and record the thickness of the pinion height adjusting washer.

NOTE:
If tooth contact (drive pinion and hypoid driven gear) is normal in the inspection before disassembling, verify that the washer is not deformed, and then reuse the used washer.

(5) Insert ST1 into the case with the pinion height adjusting washer and rear bearing cone fitted onto it.

NOTE:
Use new rear bearing cone.

(6) Install the preload adjusting spacer and washer, front bearing cone, spacer, companion flange, and washer and self-locking nut.

ST 498447150 DUMMY SHAFT
ST 32285AA000 SPACER

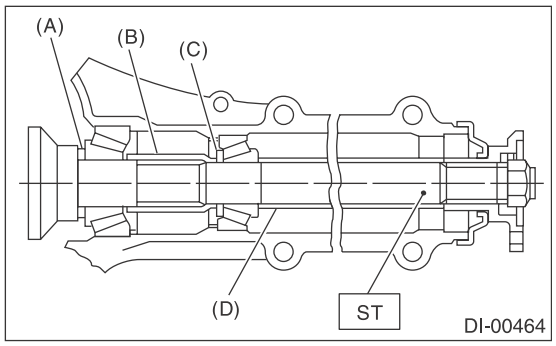

(A) Pinion height adjusting washer
(B) Preload adjusting spacer
(C) Preload adjusting washer
(D) Spacer (SUBARU genuine parts)

(7) Turn the ST by hand to smooth the bearing, and tighten the self-locking nut while measuring the initial load or initial torque with a spring scale or torque wrench. Select the preload adjusting washer and spacer so that the specified preload is obtained when nut is tightened to the specified torque.

NOTE:
- Use a new self-locking nut.
- Measure the preload in direction of tangent to the flange.
- Be careful not to give excessive preload.
- When tightening the self-locking nut, lock ST1 with ST2 as shown in the figure.

ST1 498447150 DUMMY SHAFT
ST2 398507704 BLOCK

Tightening torque:
191 N·m (19.5 kgf-m, 140.9 ft-lb)

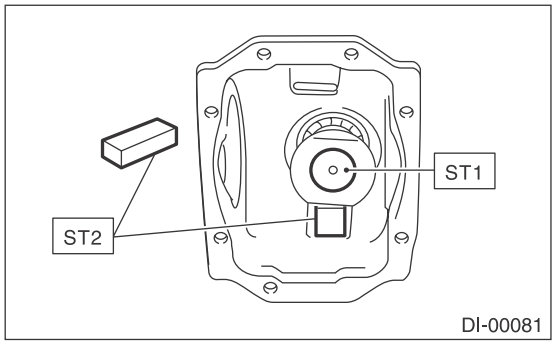

Initial load:
12.7 — 32.2 N (1.3 — 3.3 kgf, 2.9 — 7.2 lbf)

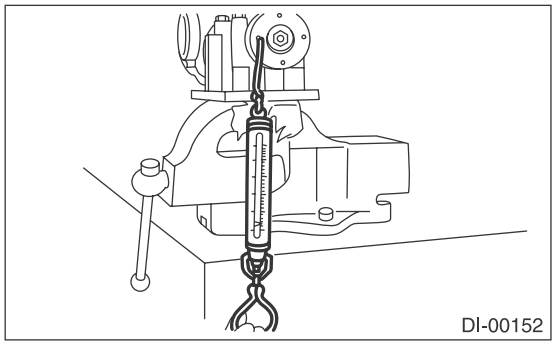

Initial torque:
0.48 — 1.22 N·m (0.05 — 0.12 kgf-m, 0.35 — 0.90 ft-lb)

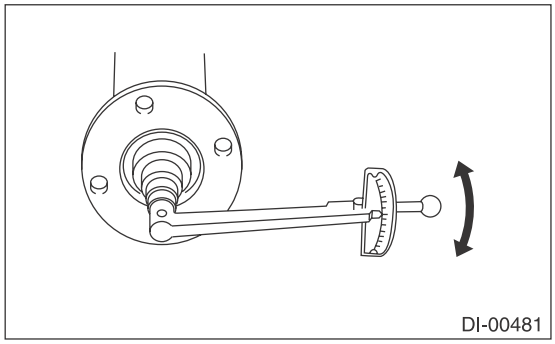

Preload adjusting washer	
Part number	Thickness mm (in)
38336AA000	1.500 (0.0591)
38336AA120	1.513 (0.0596)
38336AA010	1.525 (0.0600)
38336AA130	1.538 (0.0606)
38336AA020	1.550 (0.0610)
38336AA140	1.563 (0.0615)
38336AA030	1.575 (0.0620)
38336AA150	1.588 (0.0625)
38336AA040	1.600 (0.0630)
38336AA160	1.613 (0.0635)
38336AA050	1.625 (0.0640)
38336AA170	1.638 (0.0645)
38336AA060	1.650 (0.0650)
38336AA180	1.663 (0.0655)
38336AA070	1.675 (0.0659)
38336AA190	1.688 (0.0665)
38336AA080	1.700 (0.0669)
38336AA200	1.713 (0.0674)
38336AA090	1.725 (0.0679)
38336AA210	1.738 (0.0684)
38336AA100	1.750 (0.0689)
38336AA220	1.763 (0.0694)
38336AA110	1.775 (0.0699)

Preload adjusting spacer	
Part number	Length mm (in)
32288AA040	52.3 (2.059)
32288AA050	52.5 (2.067)
31454AA100	52.6 (2.071)
32288AA060	52.7 (2.075)
31454AA110	52.8 (2.079)
32288AA070	52.9 (2.083)
31454AA120	53.0 (2.087)
32288AA080	53.1 (2.091)
32288AA090	53.3 (2.098)

2) Adjusting drive pinion height:
Adjust the drive pinion height with washer installed between the rear bearing cone and the back of pinion gear.

(1) Attach the ST2.

NOTE:
At this time, install a pinion height adjusting washer, temporarily selected, or the same as that used before.

ST1 498447150 DUMMY SHAFT
ST2 498505501 DIFFERENTIAL CARRIER GAUGE
ST 32285AA000 SPACER

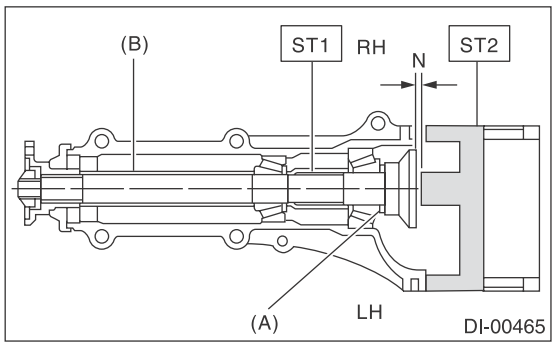

N Measured value

(A) Pinion height adjusting washer
(B) Spacer (SUBARU genuine parts)

(2) Measure the clearance “N” between the end of ST2 and the end surface of ST1 by using a thickness gauge.

NOTE:
Make sure there is no clearance between the case and ST2.

ST1 498447150 DUMMY SHAFT
ST2 498505501 DIFFERENTIAL CARRIER GAUGE

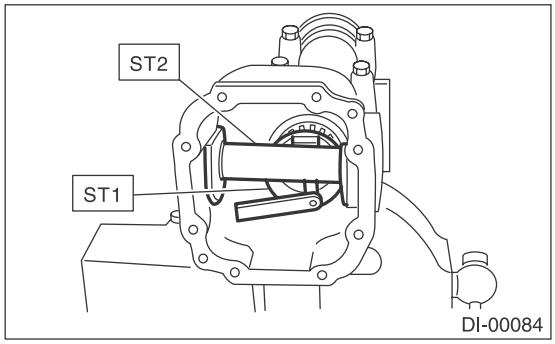

(3) Obtain the thickness of pinion height adjusting washer to be inserted from the following formula, and replace the temporarily installed washer with this one.

NOTE:
Adjust it using the 1 — 3 washers.
T = To + N – 0.05 mm (0.0020 in)

T	Thickness of pinion height adjusting washer mm (in)	
To	Thickness of washer temporarily inserted mm (in)	
N	Clearance measured by thickness gauge mm (in)	
Memo:		

(Example of calculation)
To = 0.15 mm (0.0059 in)
N = 0.1 mm (0.0039 in)
T = 0.15 + 0.1 – 0.05 = 0.2 mm (0.0079 in)
Thickness = 0.2 mm (0.0079 in)
Therefore use part number 32295AA220.

Pinion height adjusting washer	
Part number	Thickness mm (in)
32295AA200	0.150 (0.0059)
32295AA210	0.175 (0.0069)
32295AA220	0.200 (0.0079)
32295AA230	0.225 (0.0089)
32295AA240	0.250 (0.0098)
32295AA250	0.275 (0.0108)

3) Install the selected pinion height adjusting washer on drive pinion, and press the rear bearing cone into position with ST.
ST 498175500 INSTALLER

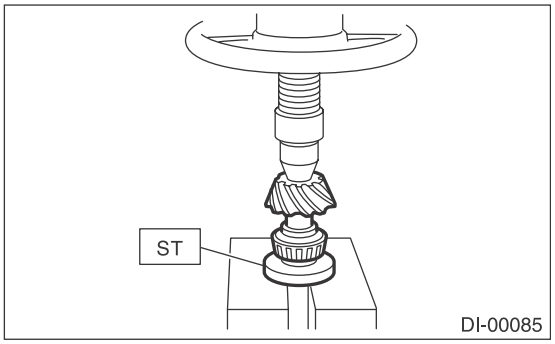

4) Insert the drive pinion into the differential carrier, and install the preselected preload adjusting spacer and washer.

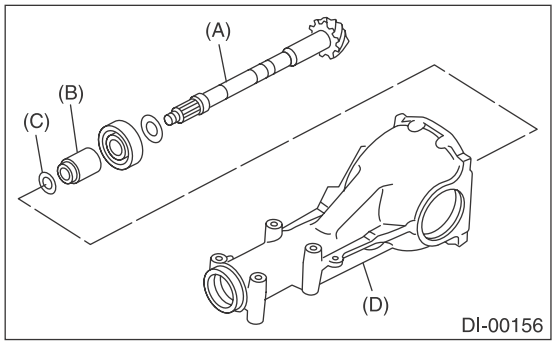

(A) Drive pinion
(B) Preload adjusting spacer
(C) Preload adjusting washer
(D) Differential carrier

5) Press-fit the front bearing cone into the carrier with ST1, ST2 and the spacer.
ST1 399780104 WEIGHT
ST2 899580100 INSTALLER
ST 32285AA000 SPACER

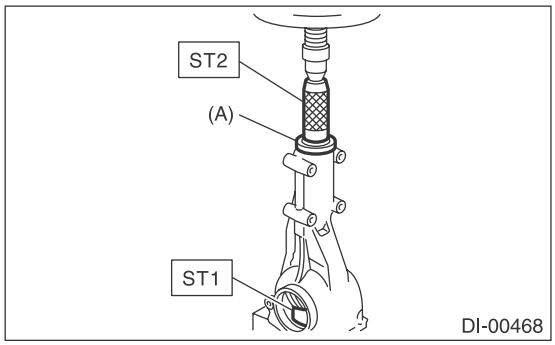

(A) Spacer (SUBARU genuine parts)

6) Insert the spacer, then press-fit the pilot bearing with ST1 and ST2.
ST1 399780104 WEIGHT
ST2 899580100 INSTALLER

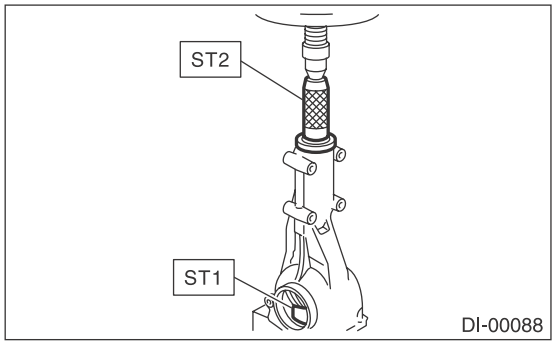

7) Using the ST, install the oil seal.

NOTE:
• Use a new oil seal.

• Press-fit until the oil seal end comes 1 mm (0.04 in) inward from end of carrier.
• Apply differential gear oil to the oil seal lips.

ST 498447120 INSTALLER

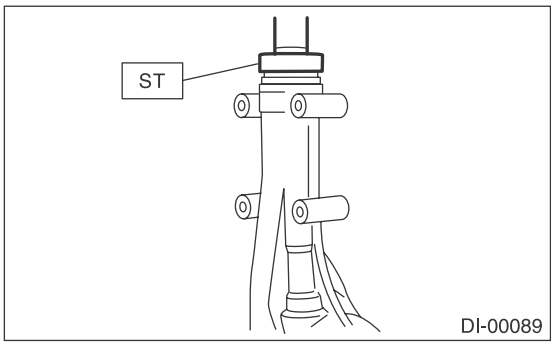

8) Press-fit the companion flange with ST1 and ST2.

NOTE:
Be careful not to damage the bearing.

ST1 899874100 INSTALLER
ST2 399780104 WEIGHT

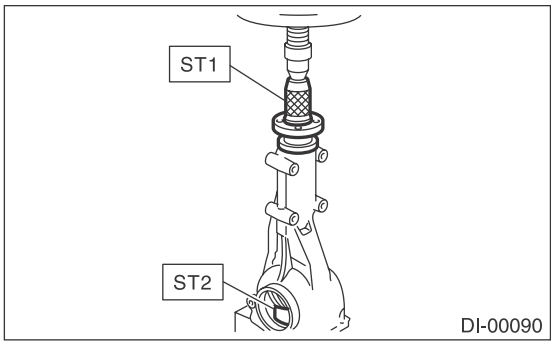

9) Attach the self-locking nut and use the ST to fix the companion flange in place, then tighten the self-locking nut.

NOTE:
• Use a new self-locking nut.
• Before installing self-locking nut, apply a sealing material to self-locking nut threads.

SEAL MATERIAL:
THREE BOND 1324 (Part No. 004403042) or equivalent

Tightening torque:
191 N·m (19.5 kgf-m, 140.9 ft-lb)

ST 498427200 FLANGE WRENCH

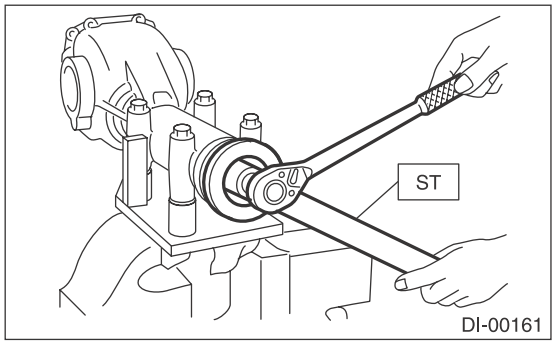

10) Check the initial torque or initial load.

Initial load:
12.7 — 32.2 N (1.3 — 3.3 kgf, 2.9 — 7.2 lb)

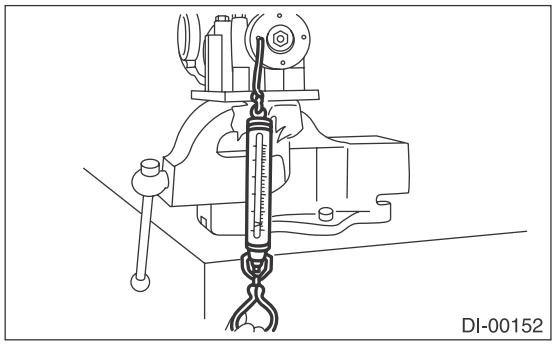

Initial torque:
0.48 — 1.22 N·m (0.05 — 0.12 kgf-m, 0.35 — 0.90 ft-lb)

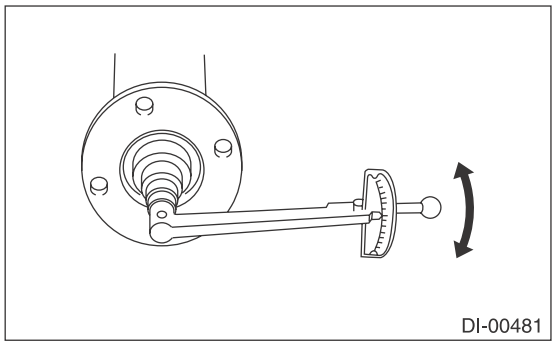

11) Assembling differential case
(1) Install the side gears and pinion mate gears, with their thrust washers and pinion mate shaft, into the differential case.

NOTE:
• Apply gear oil on both sides of the washer and on the side gear shaft before installing.
• Install the pinion mate shaft to the differential case by aligning the spring pin holes.

• The thrust washer inner surface has a chamfered side. Install the washer with the chamfered side facing toward the side gear.

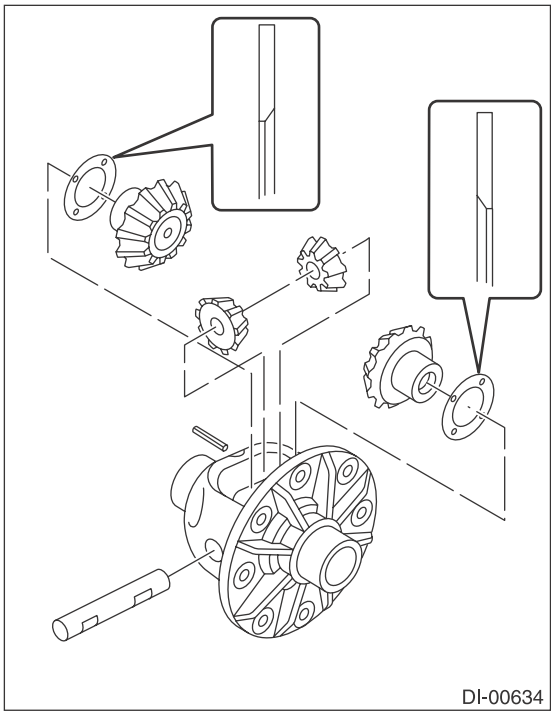

(2) Measure the side gear backlash.

Side gear backlash:
0.05 — 0.15 mm (0.002 — 0.006 in)

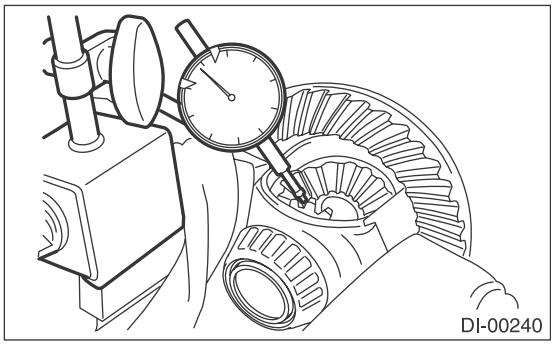

(3) Adjust the side gear backlash by selecting side gear thrust washer.

Side gear thrust washer	
Part number	Thickness mm (in)
803135011	0.925 — 0.950 (0.0364 — 0.0374)
803135012	0.950 — 0.975 (0.0374 — 0.0384)
803135013	0.975 — 1.000 (0.0384 — 0.0394)
803135014	1.000 — 1.025 (0.0394 — 0.0404)
803135015	1.025 — 1.050 (0.0404 — 0.0413)

(4) Check the condition of rotation after applying oil to the gear tooth surfaces and thrust washer surfaces.
(5) Attach the spring pin to the differential case.

NOTE:
Use new spring pin.
12) Install the hypoid driven gear to differential case.

NOTE:
• Before installing bolts, apply a sealing material to bolt threads.

SEAL MATERIAL:
THREE BOND 1324 (Part No. 004403042) or equivalent
• Tighten diagonally.

Tightening torque:
62 N·m (6.3 kgf-m, 45.7 ft-lb)

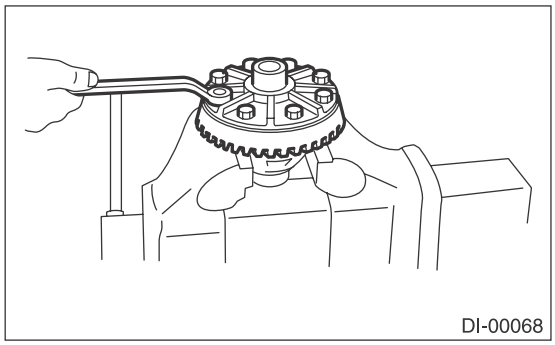

13) Using the ST, press-fit the side bearing to the differential case.
ST 498485400 DRIFT

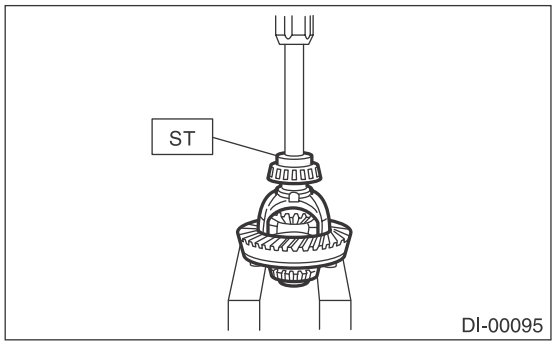

14) Assemble the side retainer.
(1) Install the oil seal into side retainer RH and LH.
ST 498447100 INSTALLER

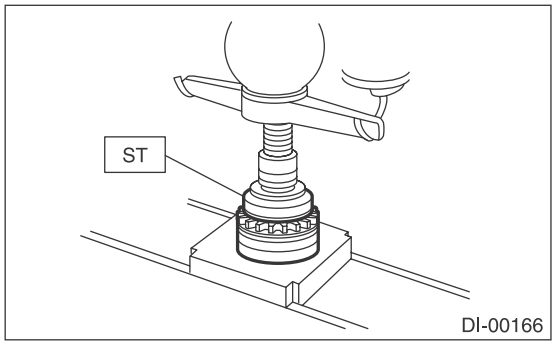

(2) Install the bearing race into side retainer RH and LH.

CAUTION:
Make sure that the RH and LH oil seals, bearing outer races and cones are properly assembled.
ST 398477702 DRIFT

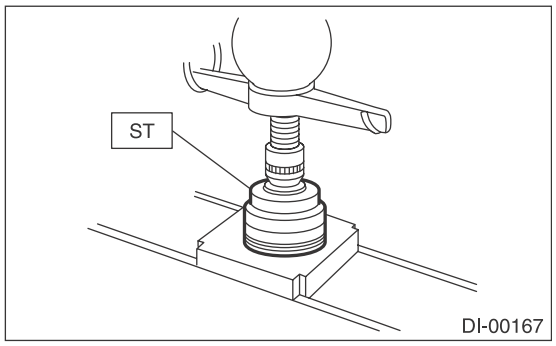

(3) Install the differential case assembly into differential carrier in the reverse order of disassembly.

NOTE:
Be careful not to hit the teeth of hypoid driven gear against the differential carrier.

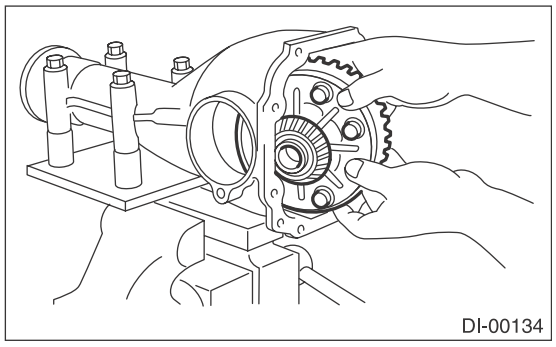

(4) Temporally tighten the side retainers RH and LH in differential carrier to install.

15) Perform the backlash adjustment between the hypoid driven gear and drive pinion, and preload adjustment of differential side bearing.
(1) Turn the drive pinion with ST for better fitting of differential side bearing.
ST 498427200 FLANGE WRENCH

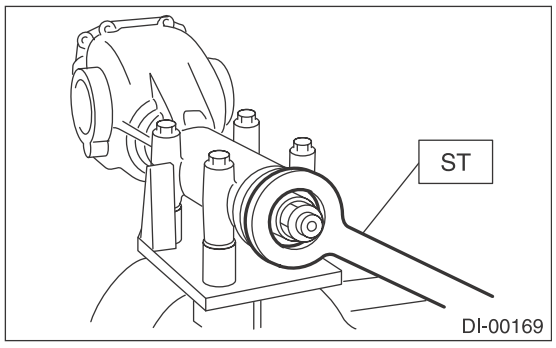

(2) Using the ST, tighten side retainer RH, and then tighten side retainer LH until there is no backlash.
ST 18630AA010 WRENCH COMPL RETAINER

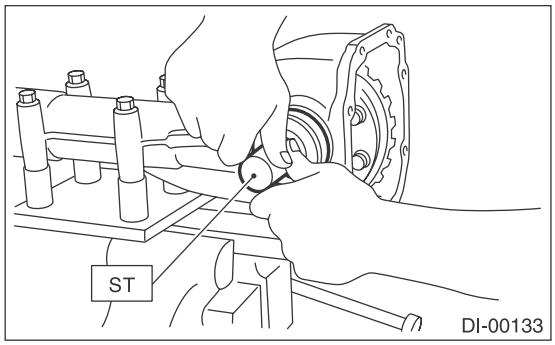

(3) Back off the side retainer LH by approx. 1.5 teeth, and tighten the side retainer RH by approx. 2 teeth (amount that the side retainer LH is turned back (1.5) + 1/2 teeth). Difference between [amount that the side retainer LH is turned back (approx. 1 and 1/2 teeth)] and [amount that the side retainer RH is tightened (approx. 2 teeth)] gives preload.
(4) Temporarily tighten the lock plate.

NOTE:
Turn over the lock plate to shift the holder by 1/2 tooth.

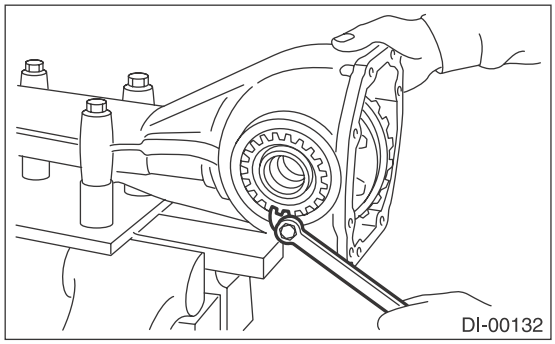

(5) Measure the hypoid driven gear-to-drive pinion backlash. Set the magnet base on differential carrier. Align the contact point of dial gauge with tooth face of hypoid driven gear, and move hypoid driven gear while holding drive pinion still. Read the value indicated on dial gauge.

NOTE:
If measured value of backlash is not within the specified range, repeat the procedures for pinion driven gear set backlash adjustment and the differential side bearing preload adjustment.

Backlash:
0.10 — 0.15 mm (0.004 — 0.006 in)

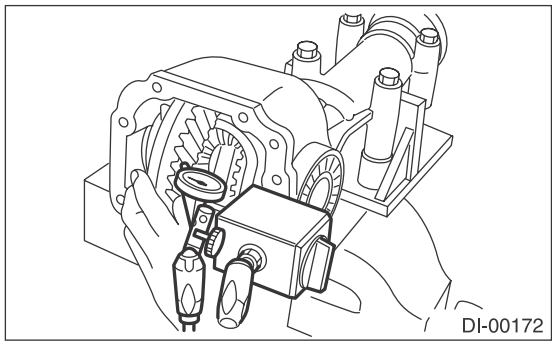

16) Put alignment marks on both the differential carrier and side retainer. Install O-rings to the side retainers one by one and restore the side retainers to the original positions.

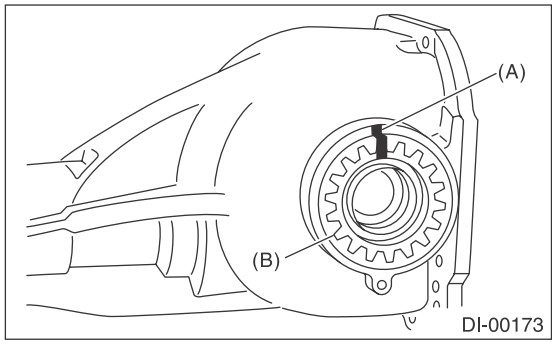

(A) Alignment mark
(B) Side retainer

17) Install the lock plate.

Tightening torque:
25 N·m (2.5 kgf-m, 18.4 ft-lb)

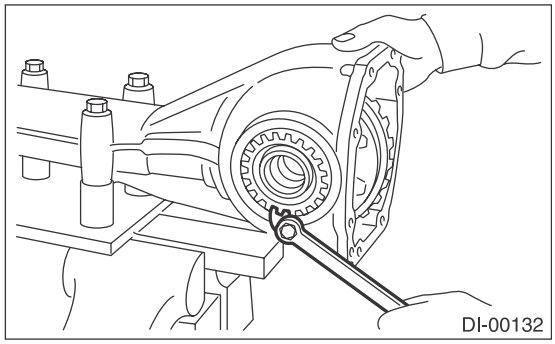

18) Recheck the hypoid driven gear to pinion backlash.

Backlash:
0.10 — 0.15 mm (0.004 — 0.006 in)

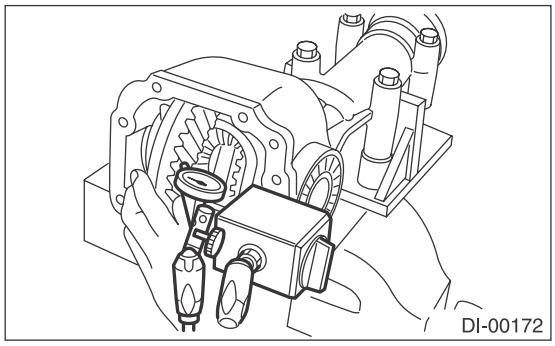

19) Checking and adjusting the tooth contact of hypoid driven gear
(1) Apply lead-free red dye evenly on the both sides of three to four teeth of the hypoid driven gear. Check the contact pattern after rotating the hypoid driven gear several revolutions back and forth until a definite contact pattern appears on the hypoid driven gear.
(2) When the contact pattern is not correct, readjust.

NOTE:
Be sure to wipe off the lead-free red dye completely after the adjustment is completed.

- Correct tooth contact

Check item: Tooth contact pattern is slightly shifted toward toe side under no-load rotation. (When driving, it moves towards the heel side.)

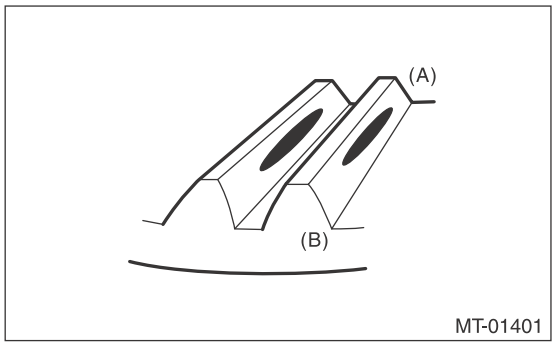

(A) Toe side
(B) Heel side

- Face contact

Check item: Backlash is too large.

Contact pattern

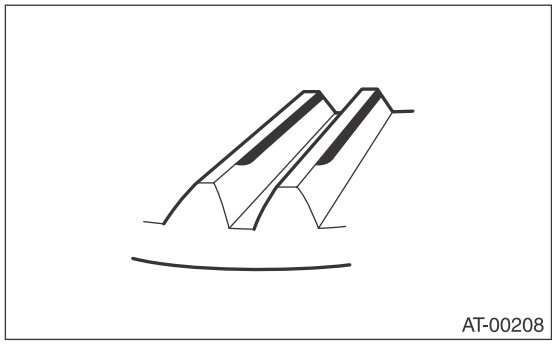

Corrective action: Increase thickness of pinion height adjusting washer according to the procedure for bringing drive pinion close to hypoid driven gear side.

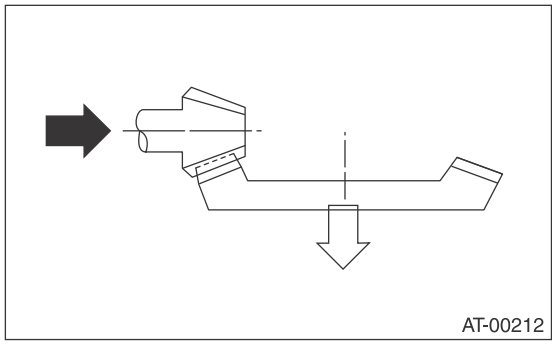

- Flank contact

Check item: Backlash is too small.

Contact pattern

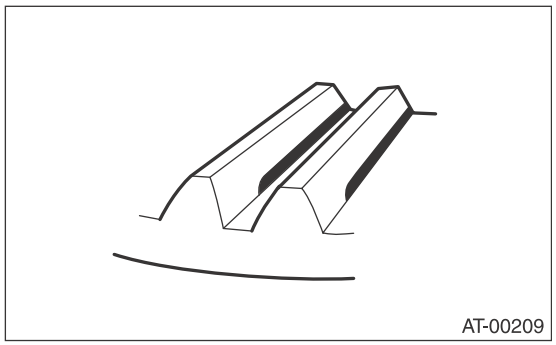

Corrective action: Reduce the thickness of pinion height adjusting washer according to the procedure for bringing drive pinion away from hypoid driven gear.

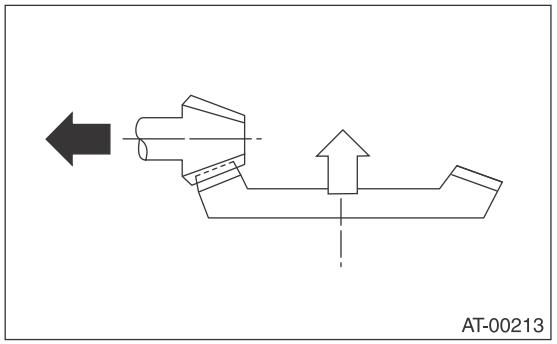

- Toe contact (inside contact)

Check item: Teeth contact area is too small.

Contact pattern

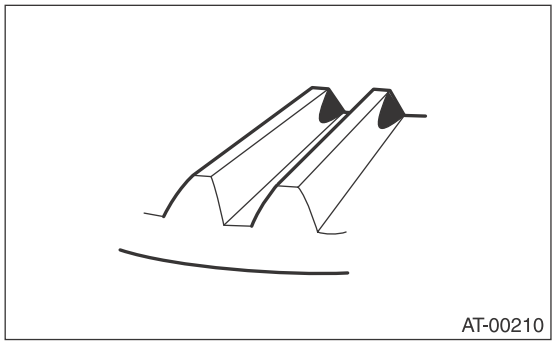

Corrective action: Reduce the thickness of pinion height adjusting washer according to the procedure for bringing drive pinion away from hypoid driven gear side.

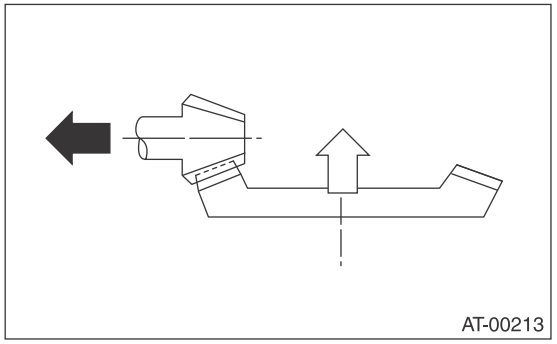

• Heel contact (outside end contact)
Check item: Teeth contact area is too small.
Contact pattern

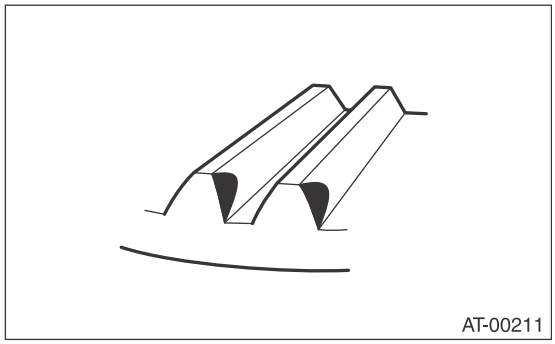

Corrective action: Increase thickness of pinion height adjusting washer according to the procedure for bringing drive pinion close to hypoid driven gear side.

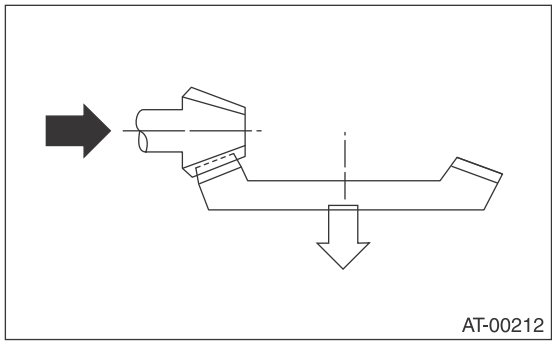

20) If correct tooth contact is not obtained, once again adjust the drive pinion height and the differential side bearing preload (already mentioned) and the hypoid gear backlash.
21) Install the gasket and the rear cover to the differential carrier.

NOTE:
Use a new gasket.

Tightening torque:
25 N·m (2.5 kgf-m, 18.4 ft-lb)

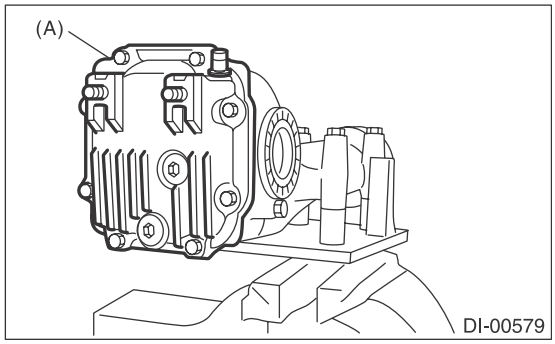

(A) Rear cover

22) Install the air breather cap.

NOTE:
Do not tap section (A) of the air breather cap. Be sure to tap section (B) to install.

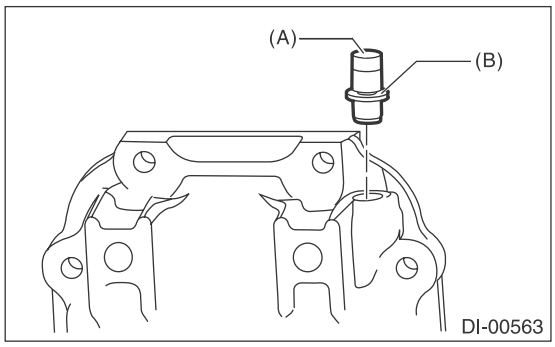

23) Install the oil drain plug.

NOTE:
Use a new gasket.

Tightening torque:
50 N·m (5.1 kg-m, 36.9 ft-lb)
24) Install the oil filler plug.

2. VA2-TYPE

NOTE:
• Assemble in the reverse order of disassembly.
• Check and adjust each part during assembly.
• Use new gaskets and O-rings.
• Keep the shims and washers in order, so that they are not improperly installed.
• Thoroughly clean the surfaces on which the shims, washers and bearings are to be installed.
• Apply gear oil when installing the bearings and thrust washers.
• Attach tags not to mix up the RH and LH bearing races.
• Replace the oil seals and O-rings with new parts at every disassembly.
• Apply differential gear oil to the lips when installing the oil seal.
• Be careful not to mix up the differential oil seal RH and LH to be installed.

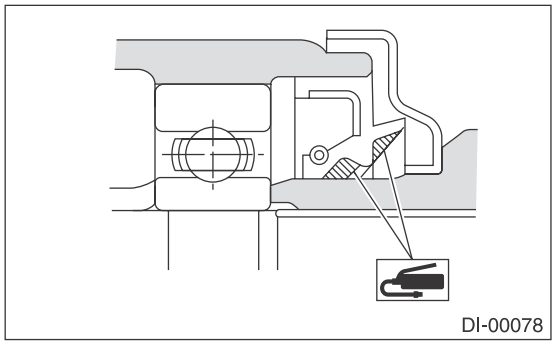

1) Adjusting preload for front and rear bearings

NOTE:
Adjust the bearing preload between front and rear bearings with spacer and washer. Pinion height adjusting washer is not affected by this adjustment. The adjustment must not be carried out with oil seal inserted.

(1) Install the rear bearing race into the differential carrier using ST1 and ST2.

ST1 398477701 HANDLE
ST2 398477703 DRIFT 2

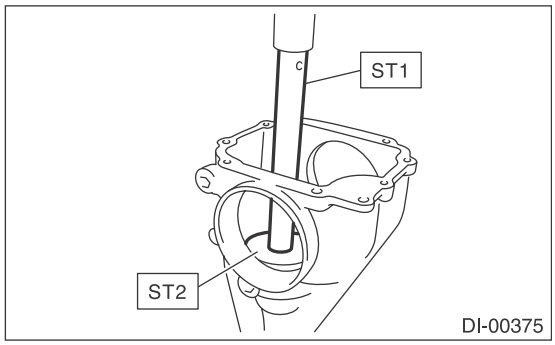

(2) Using the ST, press-fit the front bearing race to the differential carrier.

ST 499277200 INSTALLER

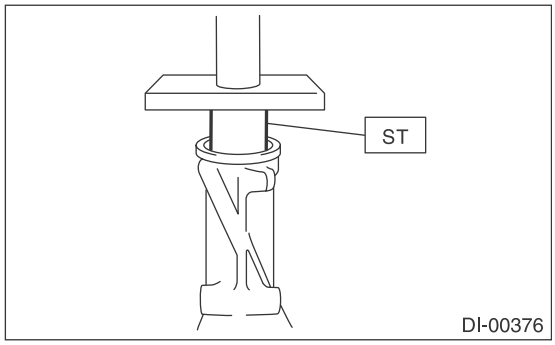

(3) Insert the front bearing cone.

NOTE:
Use new front bearing cone.

(4) Measure and record the thickness of pinion adjusting washer.

NOTE:
If tooth contact (drive pinion and hypoid driven gear) is normal in the inspection before disassembling, verify that the washer is not deformed, and then reuse the used washer.

(5) Insert the ST1 into carrier with the pinion height adjusting washer and rear bearing cone fitted onto it.

NOTE:
Use new rear bearing cone.

(6) Install the preload adjusting spacer & washer, front bearing cone, spacer, companion flange, and washer & self-locking nut.

ST1 18678AA000 DUMMY SHAFT

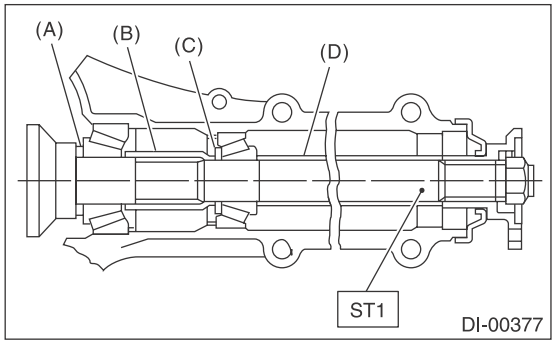

(A) Pinion height adjusting washer
(B) Preload adjusting spacer
(C) Preload adjusting washer
(D) SPACER

(7) Turn the ST1 by hand to smooth the bearing, and tighten the self-locking nut while measuring the initial load or initial torque with a spring scale or torque wrench. Select the preload adjusting washer and spacer so that the specified preload is obtained when nut is tightened to the specified torque.

NOTE:
- Use a new self-locking nut.
- Be careful not to give excessive preload.
- When tightening the self-locking nut, lock companion flange with ST2 as shown in the figure.
- Measure the preload in direction of tangent to the flange.

ST1 18678AA000 DUMMY SHAFT
ST2 498427200 FLANGE WRENCH

Tightening torque:
191 N·m (19.5 kgf-m, 140.9 ft-lb)

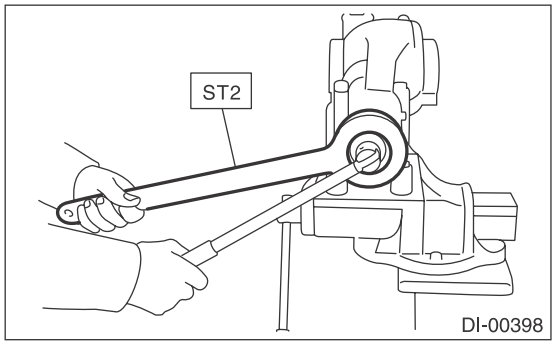

Initial load:
12.7 — 32.2 N (1.3 — 3.3 kgf, 2.9 — 7.2 lb)

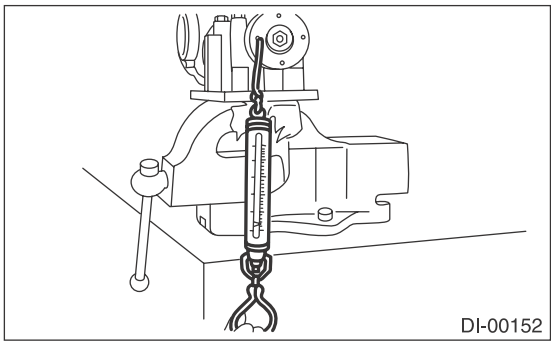

Initial torque:
0.48 — 1.22 N·m (0.05 — 0.12 kgf-m, 0.35 — 0.90 ft-lb)

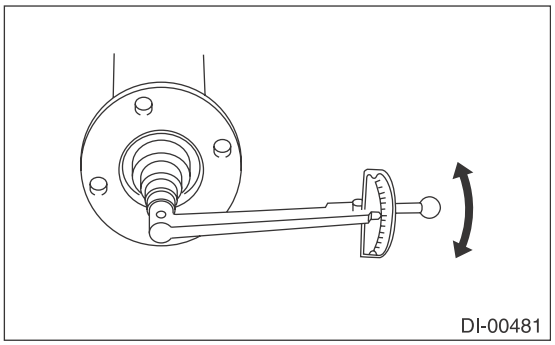

Preload adjusting washer	
Part number	Thickness mm (in)
38336AA430	1.500 (0.0591)
38336AA440	1.513 (0.0596)
38336AA450	1.525 (0.0600)
38336AA460	1.538 (0.0606)
38336AA470	1.550 (0.0610)
38336AA480	1.563 (0.0615)
38336AA490	1.575 (0.0620)
38336AA500	1.588 (0.0625)
38336AA510	1.600 (0.0630)
38336AA520	1.613 (0.0635)
38336AA530	1.625 (0.0640)
38336AA540	1.638 (0.0645)
38336AA550	1.650 (0.0650)
38336AA560	1.663 (0.0655)
38336AA570	1.675 (0.0659)
38336AA580	1.688 (0.0665)
38336AA590	1.700 (0.0669)
38336AA600	1.713 (0.0674)
38336AA610	1.725 (0.0679)
38336AA620	1.738 (0.0684)
38336AA630	1.750 (0.0689)
38336AA640	1.763 (0.0694)
38336AA650	1.775 (0.0699)

Preload adjusting spacer	
Part number	Length mm (in)
31454AA250	51.05 (2.010)
31454AA260	51.25 (2.018)
31454AA270	51.35 (2.022)
31454AA280	51.45 (2.026)
31454AA290	51.55 (2.030)
31454AA300	51.65 (2.033)
31454AA310	51.75 (2.037)
31454AA320	51.85 (2.041)
31454AA330	52.05 (2.049)

2) Adjusting drive pinion height:
Adjust the drive pinion height with washer installed between the rear bearing cone and the back of pinion gear.

(1) Attach the ST2.
ST1 18678AA000 DUMMY SHAFT
ST2 18831AA010 DIFFERENTIAL CARRIER GAUGE

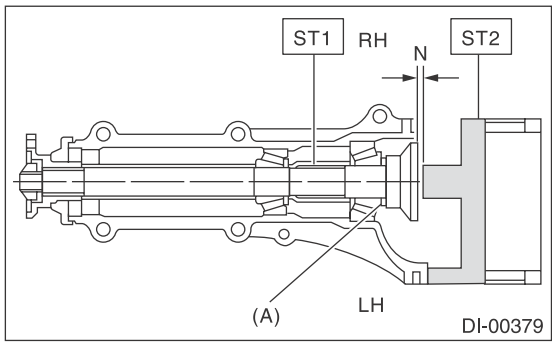

N Measured value

(A) Pinion height adjusting washer

(2) Install the side retainer LH to the left side of the differential carrier in reverse direction.

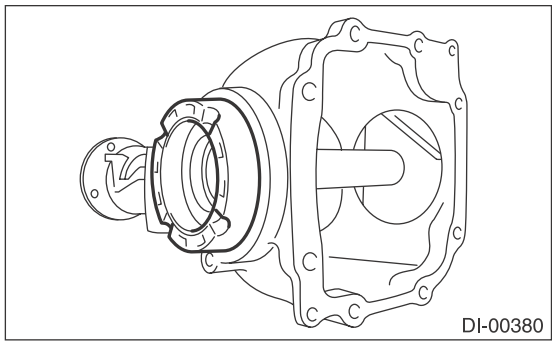

(3) Measure the clearance “N” between the end of ST2 and the end surface of ST1 by using a thickness gauge.

NOTE:
Make sure there is no clearance between the case and ST2.
ST1 18678AA000 DUMMY SHAFT
ST2 18831AA010 DIFFERENTIAL CARRIER GAUGE

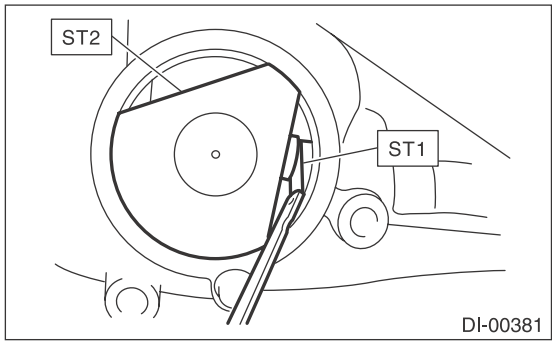

(4) Obtain the thickness of pinion height adjusting washer to be inserted from the following formula, and replace the temporarily installed washer with this one.

NOTE:
Adjust it using the 1 — 3 washers.
T = To + N – 0.05 mm (0.0020 in)

T	Thickness of pinion height adjusting washer mm (in)	
To	Thickness of washer temporarily inserted mm (in)	
N	Clearance measured by thickness gauge mm (in)	
Memo:		

(Example of calculation)
To = 0.15 mm (0.0059 in)
N = 0.1 mm (0.0039 in)
T = 0.15 mm (0.0059 in) + 0.1 mm (0.0039 in) – 0.05 mm (0.0020 in) = 0.2 mm (0.0079 in)
Thickness = 0.2 mm (0.0079 in)
Therefore use part number 32295AA370.

Pinion height adjusting washer	
Part number	Thickness mm (in)
32295AA350	0.150 (0.0059)
32295AA360	0.175 (0.0069)
32295AA370	0.200 (0.0079)
32295AA380	0.225 (0.0089)
32295AA390	0.250 (0.0098)
32295AA400	0.275 (0.0108)

3) Install the selected pinion height adjusting washer on drive pinion, and press the rear bearing cone into position with ST.
ST 398177700 INSTALLER

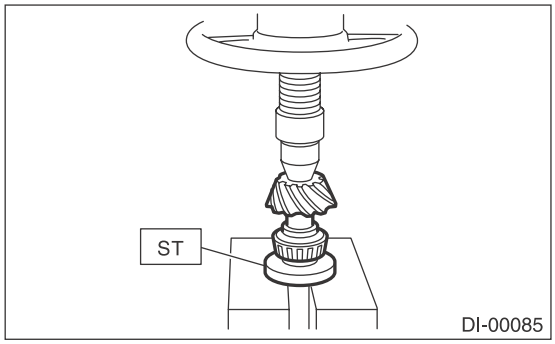

4) Insert the drive pinion into the differential carrier, and install the preselected bearing preload adjusting spacer and washer.

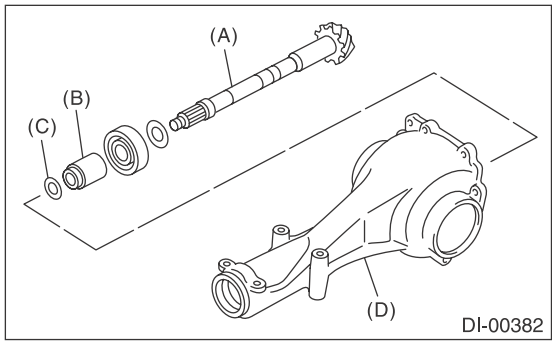

(A) Drive pinion
(B) Preload adjusting spacer
(C) Preload adjusting washer
(D) Differential carrier

5) Set ST and differential carrier to the press and install the front bearing cone.
ST 399780104 WEIGHT

NOTE:
Set the carrier to the press until the companion flange is installed.

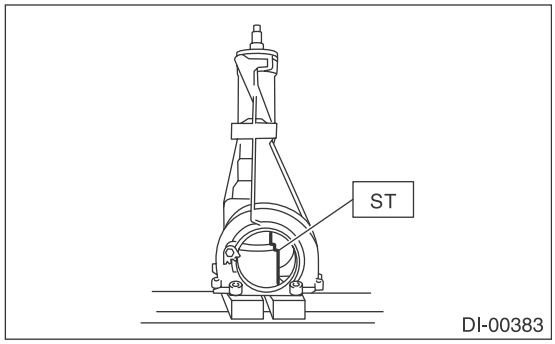

6) Insert the spacer, then install the pilot bearing.

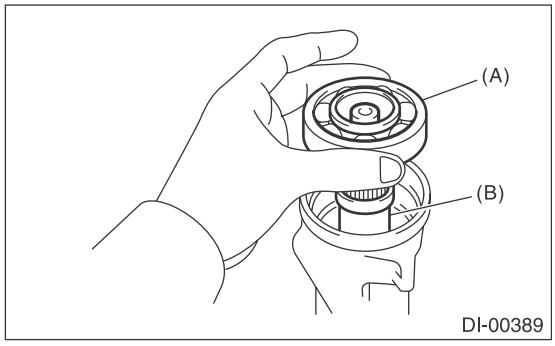

(A) Pilot bearing
(B) SPACER

7) Using the ST, install the oil seal.

NOTE:
- Use a new oil seal.
- Press-fit until the oil seal end comes 1 mm (0.04 in) inward from end of carrier.
- Apply differential gear oil to the oil seal lips.

ST 499277200 INSTALLER

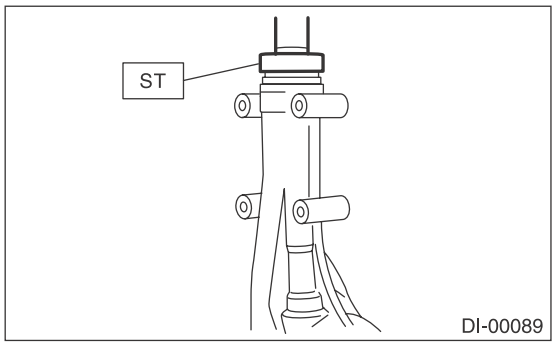

8) Press-fit the companion flange with ST.

NOTE:
Be careful not to damage the bearing.
ST 899874100 INSTALLER

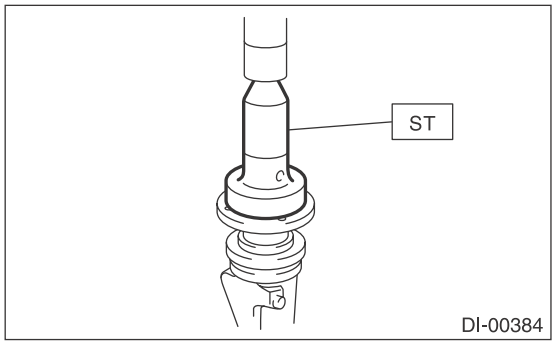

9) Apply seal material on the drive pinion shaft thread and new self-locking nut seat.

SEAL MATERIAL:
THREE BOND 1324 (Part No. 004403042) or equivalent

10) Install the self-locking nut while holding the companion flange with ST.

Tightening torque:
191 N·m (19.5 kgf-m, 140.9 ft-lb)
ST 498427200 FLANGE WRENCH

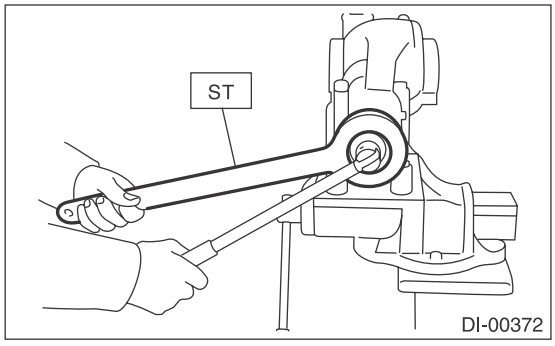

11) Measure the initial torque and initial load.

Initial load:
12.7 — 32.2 N (1.3 — 3.3 kgf, 2.9 — 7.2 lb)

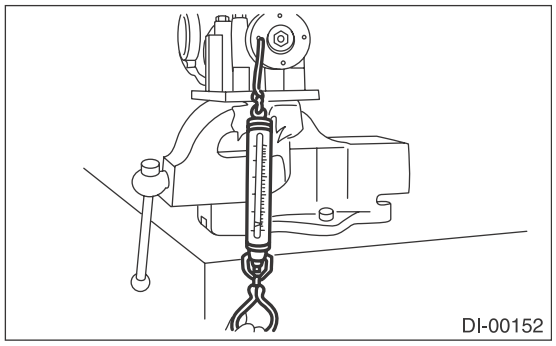

Initial torque:
0.48 — 1.22 N·m (0.05 — 0.12 kgf-m, 0.35 — 0.90 ft-lb)

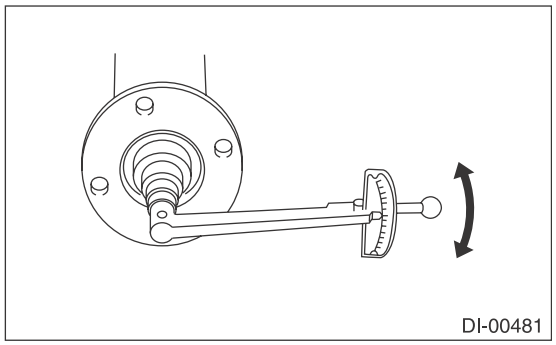

12) Assembling differential case
(1) Attach the circlip to the side gear.

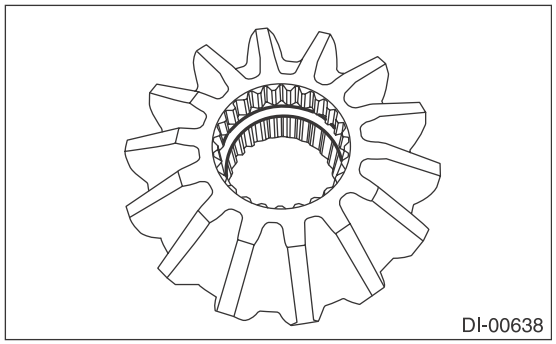

(2) Install the side gears and pinion mate gears, with their thrust washers and pinion mate shaft, into the differential case.

NOTE:
• Apply gear oil on both sides of the washer and on the side gear shaft before installing.

• Install the pinion mate shaft to the differential case by aligning the spring pin holes.

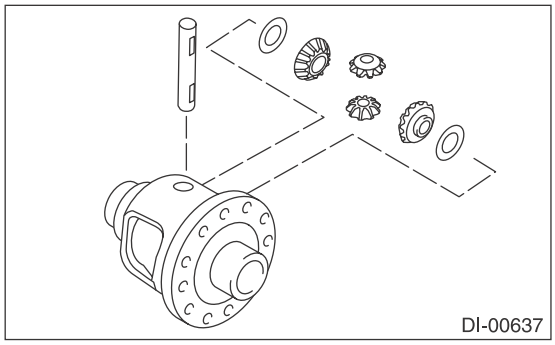

(3) Measure the side gear backlash.

Side gear backlash:
0.13 — 0.18 mm (0.005 — 0.007 in)

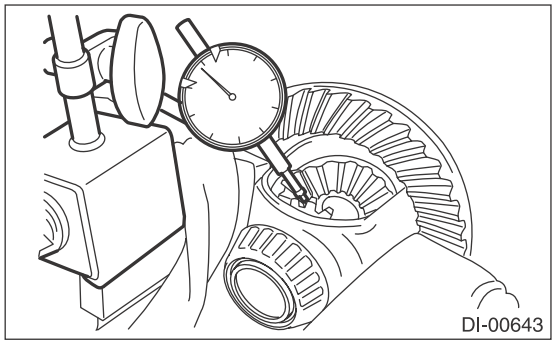

(4) Adjust the side gear backlash by selecting side gear thrust washer.

Side gear thrust washer	
Part number	Thickness mm (in)
803038021	0.950 (0.0374)
803038022	1.000 (0.0394)
803038023	1.050 (0.0413)

(5) Check the condition of rotation after applying oil to the gear tooth surfaces and thrust washer surfaces.
(6) Attach the spring pin to the differential case.

NOTE:
Use new spring pin.
13) Install the hypoid driven gear to differential case.

NOTE:
• Set a cushioning such as wooden block, aluminum plate or shop cloth between vise and differential case if the side gear comes into contact with vise.
• Before installing bolts, apply a sealing material to bolt threads.

SEAL MATERIAL:
THREE BOND 1324 (Part No. 004403042) or equivalent
• Tighten diagonally.

(1) Tighten the hypoid driven gear mounting bolts to the specified torque using the ST.
ST 18270KA020 SOCKET (E20)

Tightening torque:
20 N·m (2.0 kgf-m, 14.8 ft-lb)

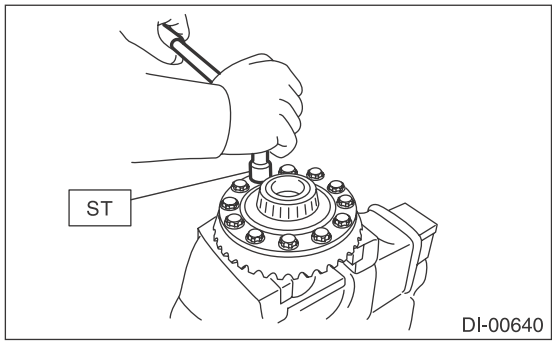

(2) While checking the tightening angle with the ST, further tighten the hypoid driven gear mounting bolts.

Tightening angle:
33°±2°
ST 18554AA000 ANGLE GAUGE

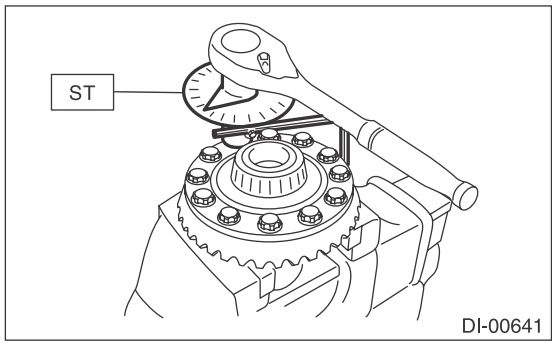

14) Using the ST, press-fit the side bearing to the differential case.
ST 398487700 DRIFT

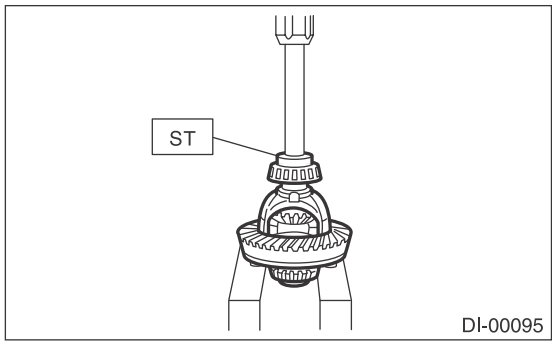

15) Assemble the side retainer.
(1) Install the oil seal into side retainer RH and LH.

CAUTION:
Make sure that the oil seals and side retainers are properly assembled.

NOTE:
Use a new oil seal.
ST 498447100 INSTALLER

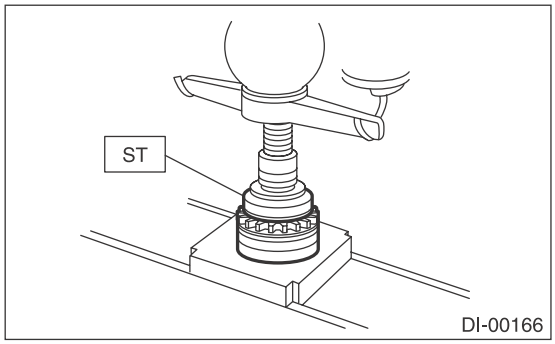

(2) Install the bearing race into side retainer RH and LH.

CAUTION:
Make sure that the bearing outer races and cones are properly assembled.
ST 398417700 DRIFT

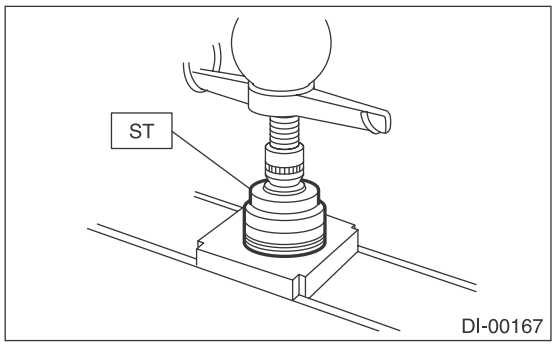

(3) Install the differential assembly into differential carrier in the reverse order of disassembly.

NOTE:
Be careful not to hit the teeth of hypoid driven gear against the differential carrier.

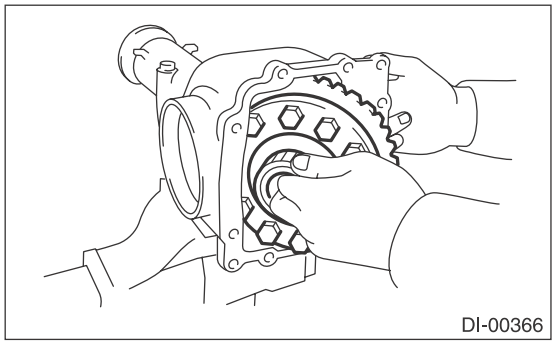

(4) Temporally tighten the side retainers RH and LH in differential carrier to install.

16) Perform the backlash adjustment between the hypoid driven gear and drive pinion, and preload adjustment of differential side bearing.

(1) Turn the drive pinion with ST for better fitting of differential side bearing.

ST 498427200 FLANGE WRENCH

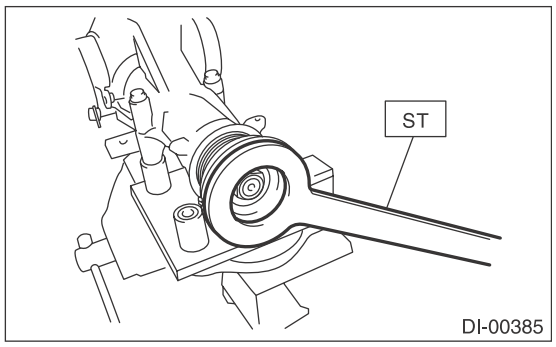

(2) Using the ST, tighten side retainer RH, and then tighten side retainer LH until there is no backlash.

ST 18630AA010 WRENCH COMPL RETAINER

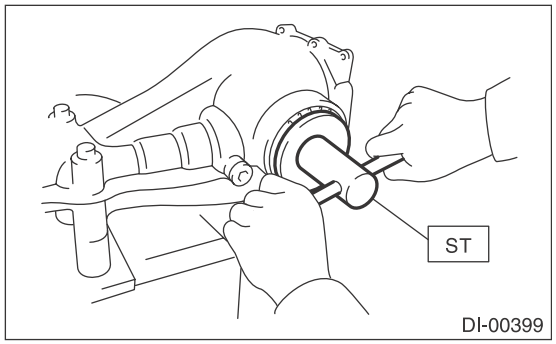

(3) Back off the side retainer LH by approx. 1.5 teeth, and tighten the side retainer RH by approx. 2 teeth (amount that the side retainer LH is turned back (1.5) + 1/2 teeth).

NOTE:
Difference between [amount that the side retainer LH is turned back (approx. 1 and 1/2 teeth)] and [amount that the side retainer RH is tightened (approx. 2 teeth)] gives preload.

(4) Temporarily attach the lock plate.

NOTE:
Turn over the lock plate to shift the holder by 1/2 tooth.

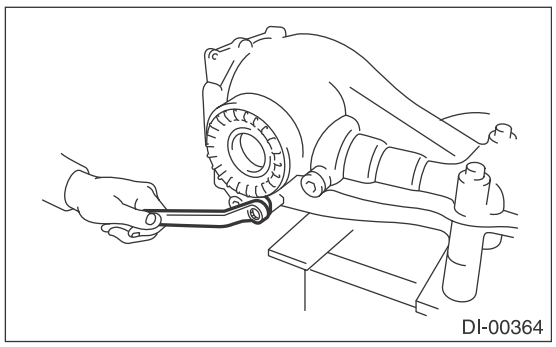

(5) Measure the hypoid driven gear-to-drive pinion backlash. Set the magnet base on differential carrier. Align the contact point of dial gauge with tooth face of hypoid driven gear, and move hypoid driven gear while holding drive pinion still. Read the value indicated on dial gauge.

NOTE:
If measured value of backlash is not within the specified range, repeat the procedures for pinion driven gear set backlash adjustment and the differential side bearing preload adjustment.

Backlash:
0.10 — 0.15 mm (0.004 — 0.006 in)

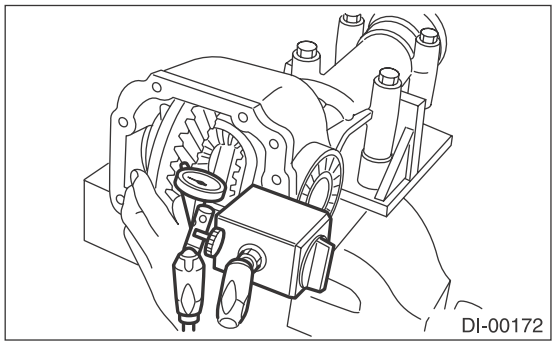

17) Put alignment marks on both the differential carrier and side retainer. Remove the side retainer side at a time. Replace them in the original position after inserting an O-ring and applying differential gear oil to the threaded portion.

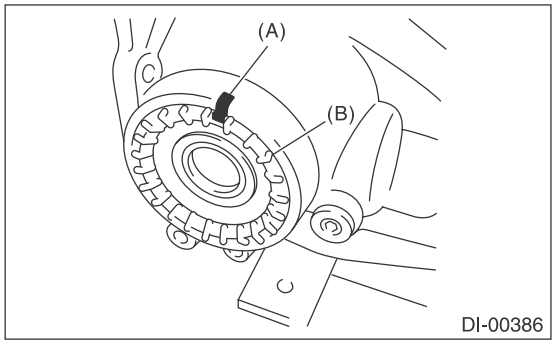

(A) Alignment mark
(B) Side retainer

18) Tighten the bolt of lock plate to specified torque.

Tightening torque:
25 N·m (2.5 kgf-m, 18.4 ft-lb)

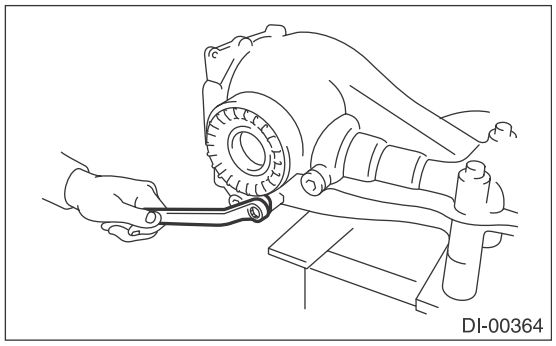

19) Recheck the hypoid driven gear to pinion backlash.

Backlash:
0.10 — 0.15 mm (0.004 — 0.006 in)

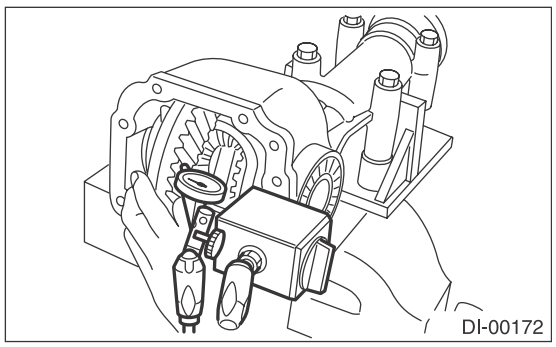

20) Checking and adjusting the tooth contact of hypoid driven gear
(1) Apply lead-free red dye evenly on the both sides of three to four teeth of the hypoid driven gear. Check the contact pattern after rotating the hypoid driven gear several revolutions back and forth until a definite contact pattern appears on the hypoid driven gear.
(2) When the contact pattern is not correct, readjust.

NOTE:
Be sure to wipe off the lead-free red dye completely after the adjustment is completed.

• Correct tooth contact
Check item: Tooth contact pattern is slightly shifted toward toe side under no-load rotation. (When driving, it moves towards the heel side.)

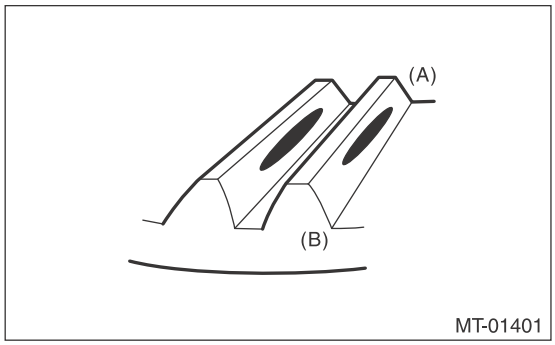

(A) Toe side
(B) Heel side

• Face contact
Check item: Backlash is too large.
Contact pattern

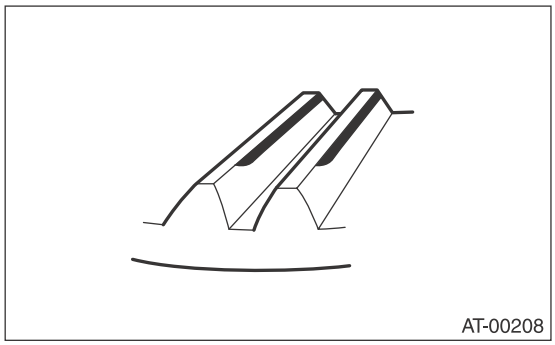

Corrective action: Increase thickness of pinion height adjusting washer according to the procedure for bringing drive pinion close to hypoid driven gear side.

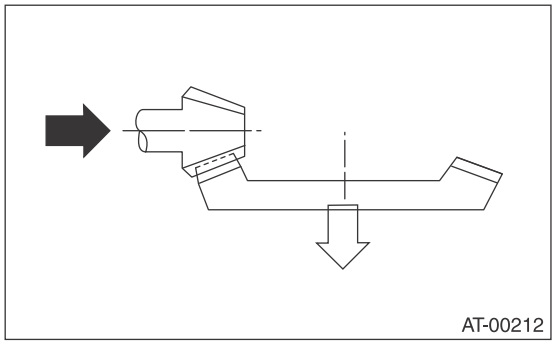

• Flank contact
Check item: Backlash is too small.
Contact pattern

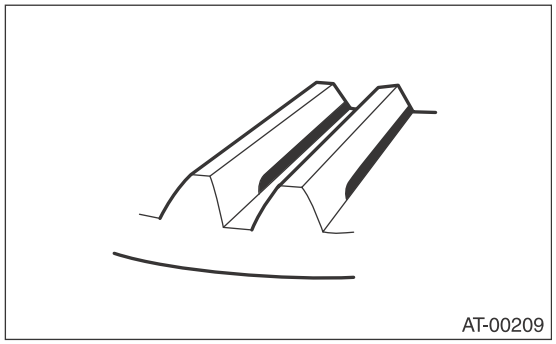

Corrective action: Reduce the thickness of pinion height adjusting washer according to the procedure for bringing drive pinion away from hypoid driven gear.

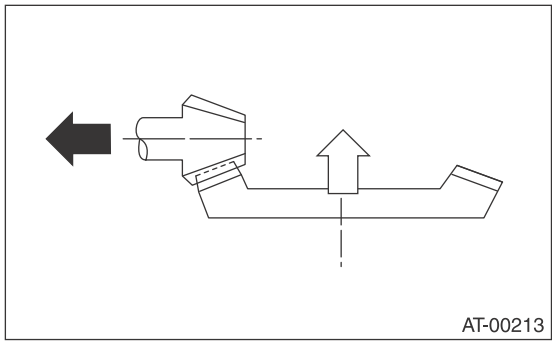

• Toe contact (inside contact)
Check item: Teeth contact area is too small.
Contact pattern

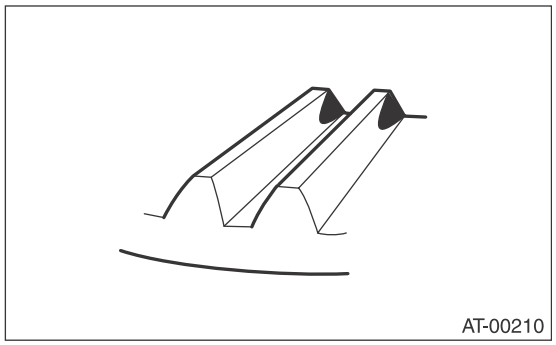

Corrective action: Reduce the thickness of pinion height adjusting washer according to the procedure for bringing drive pinion away from hypoid driven gear.

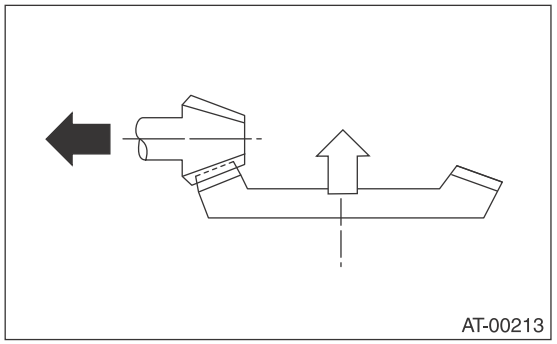

• Heel contact (outside end contact)
Check item: Teeth contact area is too small.
Contact pattern

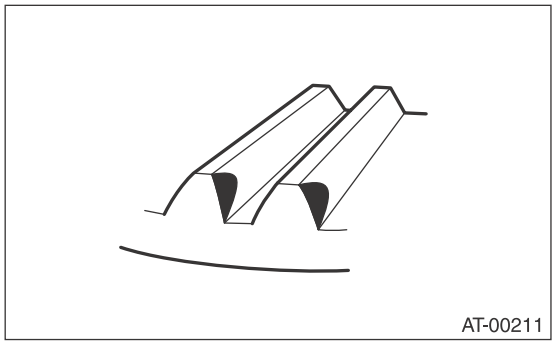

Corrective action: Increase thickness of pinion height adjusting washer according to the procedure for bringing drive pinion close to hypoid driven gear side.

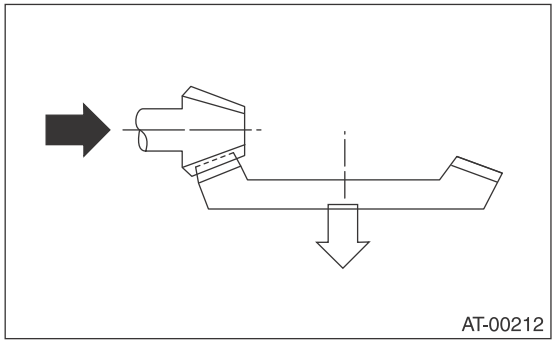

21) If correct tooth contact is not obtained, once again adjust the drive pinion height and the differential side bearing preload (already mentioned) and the hypoid gear backlash.
22) Install the gasket and the rear cover to the differential carrier.

NOTE:
Use a new gasket.

Tightening torque:
34 N·m (3.5 kgf-m, 25.1 ft-lb)

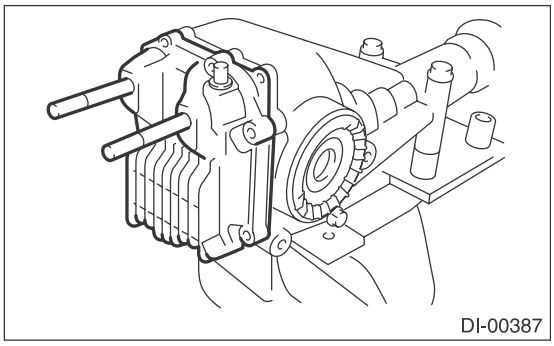

23) Install the air breather cap.

NOTE:
Do not tap section (A) of the air breather cap. Be sure to tap section (B) to install.

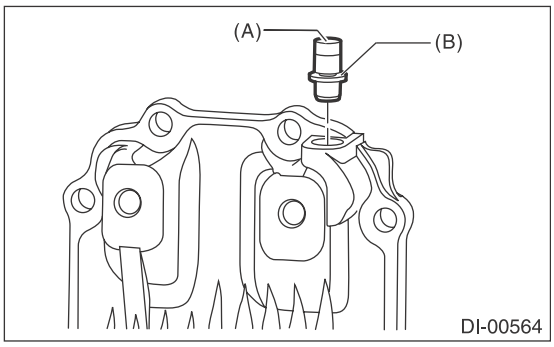

24) Install the oil drain plug.

NOTE:
Use a new gasket.

Tightening torque:
50 N·m (5.1 kgf-m, 36.9 ft-lb)

25) Install the filler plug.

E: INSPECTION

Wash all the disassembled parts clean, and examine them for wear, damage or other defects. Repair or replace the defective parts as necessary.

1) Hypoid driven gear and drive pinion
• If there is evidently an abnormal tooth contact, find out the cause and adjust until the teeth contact correctly. Replace the gear if there is an excessive worn or an incapable adjustment.
• If crack, cutout or seizure is found, replace the parts as a set. Slight damage of some teeth can be corrected by oil stone or the like.

2) Side gear and pinion mate gear
• Replace if cracks, scoring or other defects are evident on the tooth surface.
• Replace if thrust washer contact surface is worn or seized. Slight damages of the surface can be corrected by oil stones or equivalent.

3) Bearing
Replace if seizure, peeling, wear, rust, dragging during rotation, noise or other defect is evident.

4) Thrust washer of the side gear and pinion mate gear:
Replace if seized, flawed, abnormally worn or having other defects.

5) Oil seal
Replace if deformed or damaged, and at every disassembling.

6) Differential carrier
Replace if the bearing bores are worn or damaged.

7) Differential case
Replace if its sliding surfaces are abnormally worn, burned, or cracked.

8) Companion flange
Replace if the oil seal lip contact surface shows cracking.

1. SIDE GEAR BACKLASH

Using a dial gauge, check the backlash of side gear.

Side gear backlash:
VA1-type:
0.05 — 0.15 mm (0.002 — 0.006 in)
VA2-type:
0.13 — 0.18 mm (0.005 — 0.007 in)

If the side gear backlash is not within the specification, select the side gear thrust washer and adjust the side gear backlash as specified.

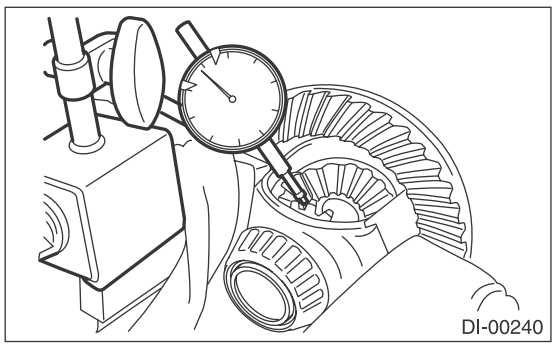

2. HYPOID DRIVEN GEAR BACKLASH

Using a dial gauge, check the backlash of hypoid driven gear.

Hypoid driven gear backlash:
0.10 — 0.15 mm (0.004 — 0.006 in)

If the hypoid driven gear backlash is not within the specification, adjust the side bearing preload or repair if necessary.

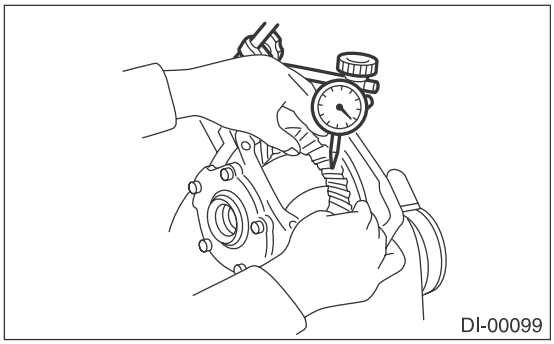
DI-00099

3. TOOTH CONTACT BETWEEN HYPOID DRIVEN GEAR AND DRIVE PINION

Inspect the tooth contact between the hypoid driven gear and drive pinion. <Ref. to DI-51, ASSEMBLY, Rear Differential (VA-type).>

4. COMPANION FLANGE

1) If rust or dirt is attached to the companion flange, remove them.
2) Set a dial gauge at a companion flange surface (mating surface of propeller shaft and companion flange), and then measure the companion flange runout.

Limit of runout:
0.08 mm (0.003 in)

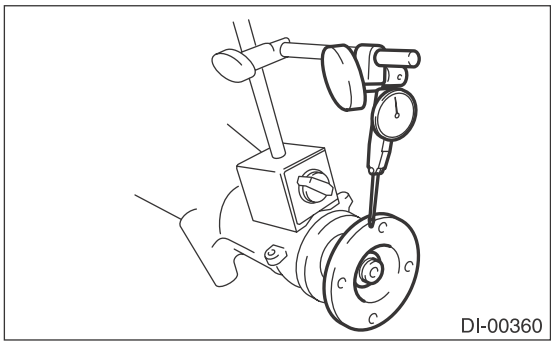
DI-00360

3) Set the gauge inside of the companion flange, and measure the runout.

Limit of runout:
0.08 mm (0.003 in)

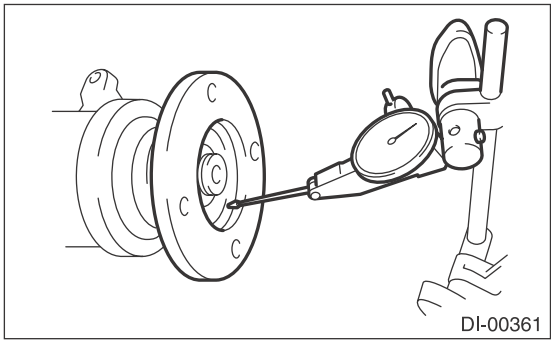
DI-00361

4) If either runout exceeds the limit, move the phase of companion flange and drive pinion 90° each, and find the point where the runout is within the limit.
5) If the runout exceeds the limit even after changing the phase, replace the companion flange and recheck the runout.
6) If the runout exceeds the limit after replacing the companion flange, the drive pinion may be assembled incorrectly or bearing is faulty.

F: ADJUSTMENT

1. SIDE GEAR BACKLASH

Adjust the side gear backlash. <Ref. to DI-51, ASSEMBLY, Rear Differential (VA-type).>

2. HYPOID DRIVEN GEAR BACKLASH

Adjust hypoid driven gear backlash. <Ref. to DI-51, ASSEMBLY, Rear Differential (VA-type).>

3. TOOTH CONTACT BETWEEN HYPOID DRIVEN GEAR AND DRIVE PINION

Adjust the tooth contact between hypoid driven gear and drive pinion gear. <Ref. to DI-51, ASSEMBLY, Rear Differential (VA-type).>

6. Rear Differential Front Oil Seal

A: INSPECTION

Make sure that there is no leakage from front oil seal portion. If there is any leakage, replace the oil seal and inspect the propeller shaft.

B: REPLACEMENT

1) Disconnect the ground cable from battery.
2) Shift the select lever or gear shift lever to neutral.
3) Release the parking brake.
4) Lift up the vehicle.
5) Drain differential gear oil.
6) Remove the rear exhaust pipe.
• 2.5 L SOHC model
<Ref. to EX(H4SO)-8, REMOVAL, Rear Exhaust Pipe.>
• 2.5 L DOHC turbo model
<Ref. to EX(H4DOTC)-15, REMOVAL, Rear Exhaust Pipe.>
• 3.6 L model
<Ref. to EX(H6DO)-8, REMOVAL, Rear Exhaust Pipe.>
7) Remove the heat shield cover.

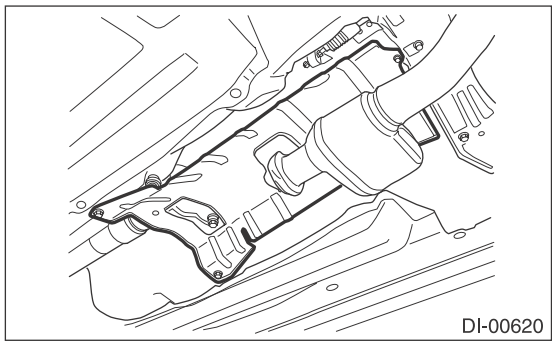
DI-00620

8) Remove the propeller shaft. <Ref. to DS-10, REMOVAL, Propeller Shaft.>
9) Remove the self-locking nut while holding the companion flange with ST.
ST 498427200 FLANGE WRENCH

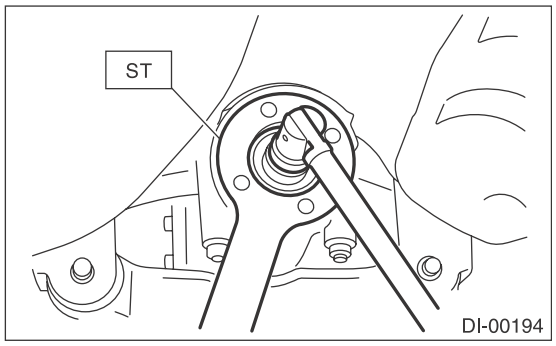

DI-00194

10) Extract the companion flange using the ST.
ST 399703600 PULLER ASSY

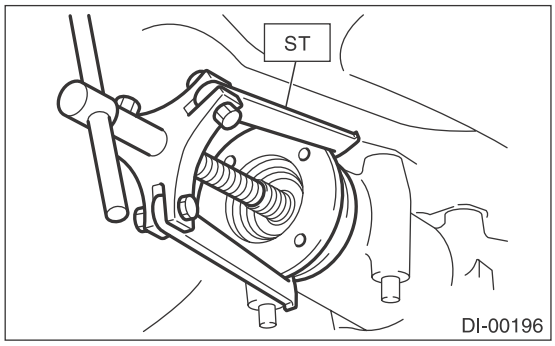

DI-00196

11) Remove the oil seal using ST or screwdriver.
ST 398527700 PULLER ASSY

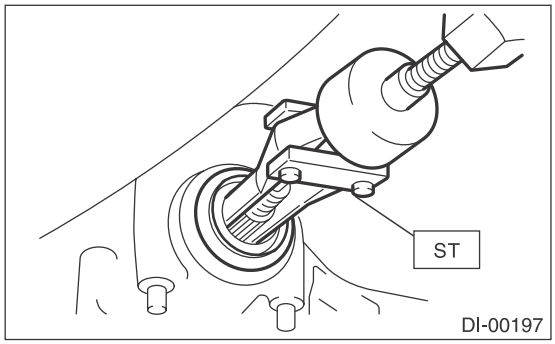

DI-00197

12) Using the ST, install the oil seal.

NOTE:
• Use a new oil seal.
• Apply differential gear oil to the oil seal lips.
ST 498447120 INSTALLER

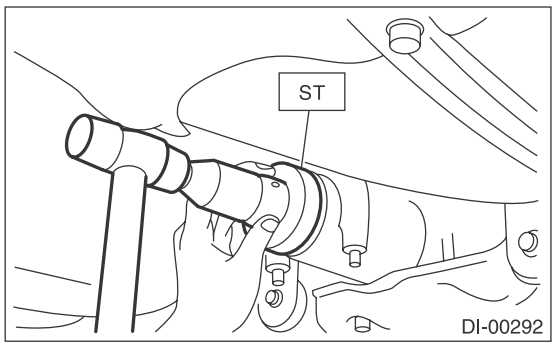

DI-00292

13) Use a plastic hammer to install companion flange.
14) Tighten the self-locking nut within the specified torque range so that the rotating resistance of companion flange becomes the same as that of before oil seal replacement.
ST 498427200 FLANGE WRENCH

NOTE:
• Use a new self-locking nut.
• Before installing self-locking nut, apply a sealing material to self-locking nut threads.

SEAL MATERIAL:
THREE BOND 1324 (Part No. 004403042) or equivalent

Tightening torque:
T-type
181.5 N·m (18.5 kgf-m, 133.9 ft-lb)
VA-type
191 N·m (19.5 kgf-m, 140.9 ft-lb)

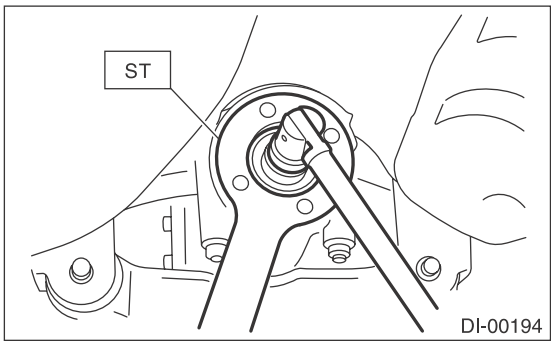

15) Hereafter, reassemble in the reverse order of disassembly.
16) Fill differential gear oil. <Ref. to DI-23, Differential Gear Oil.>

7. Rear Differential Side Oil Seal

A: INSPECTION

Make sure that there is no leakage from side oil seal. If there is any leakage, replace the oil seal.

B: REPLACEMENT

1) Remove the rear differential. <Ref. to DI-26, REMOVAL, Rear Differential (T-type).> <Ref. to DI-45, REMOVAL, Rear Differential (VA-type).>
2) Remove the rear differential side oil seal using a ST or screwdriver wrapped with vinyl tape to prevent the side retainer from scratching.
3) Using the ST, install the oil seal to the side retainer.

- T-type and VA2-type

ST 398437700 DRIFT

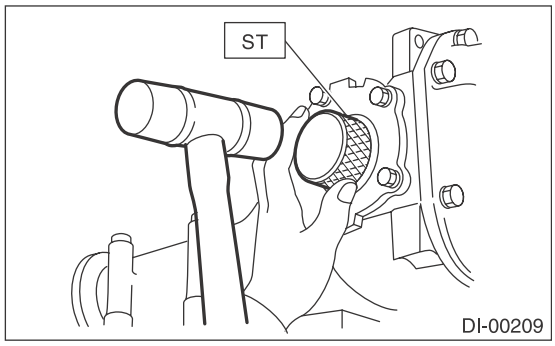

- VA1-type

ST 498447100 INSTALLER

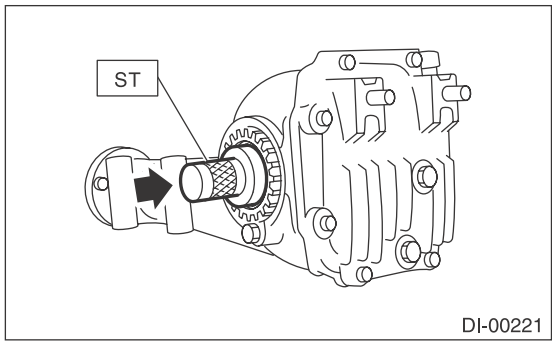

4) Install the rear differential. <Ref. to DI-28, INSTALLATION, Rear Differential (T-type).> <Ref. to DI-45, INSTALLATION, Rear Differential (VA-type).>

8. Rear Differential Front Member

A: REMOVAL

1) Disconnect the ground cable from battery.
2) Lift up the vehicle.
3) Support the rear differential using transmission jack, and then remove the rear differential front member.

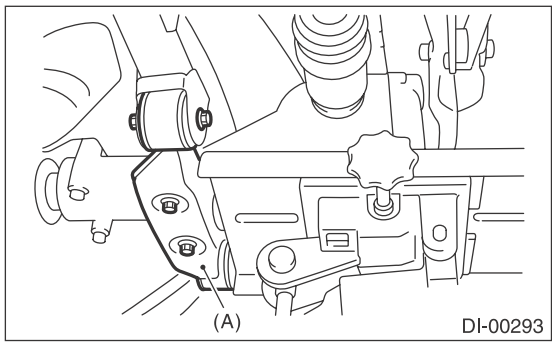

(A) Rear differential front member

B: INSTALLATION

Install the rear differential front member with a new self-locking nut.

Tightening torque:
T1: 50 N·m (5.1 kgf-m, 36.9 ft-lb)
T2: 110 N·m (11.2 kgf-m, 81.1 ft-lb)

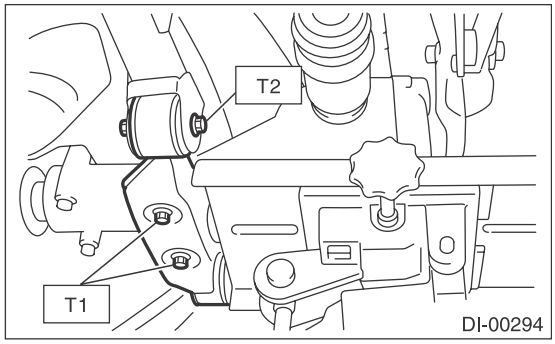

C: INSPECTION

1) Check the rear differential front member for damage, bend and corrosion.
If damage, bend or corrosion is excessive, replace the rear differential front member.
2) Check the bushings of rear differential member for cracking, hardening and damage. If cracking, hardening or damage is excessive, replace rear differential front member.

9. Rear Differential Mount Bushing

A: INSPECTION

Check the rear differential mount bushing for cracks, hardening or damage. If cracking, hardening or damage is excessive, replace rear differential mount bushing.

B: REPLACEMENT

1) Remove the rear differential. <Ref. to DI-26, REMOVAL, Rear Differential (T-type).> <Ref. to DI-45, REMOVAL, Rear Differential (VA-type).>
2) Remove the rear differential mount bushing using ST1 — 7.
(1) From the SPECIAL TOOL ASSY (41399FG000), select the tool to be used for removal.
(2) Apply grease to the threaded portion on the shaft of ST1 and the bearing of ST4.
(3) Set the STs as shown in the illustration and tighten the ring of ST5 by hand until it stops.
(4) Secure the edge of the shaft of ST1 with a spanner, and tighten the nut of ST2 until the rear differential mount bushing comes out of the sub frame.

CAUTION:
Turning the shaft of ST1 may loosen the ST5 and damage a ST. Be sure to secure the ST1.

ST1	41399FG090	SPECIAL TOOL SHAFT
ST2	41399FG070	SPECIAL TOOL NUT
ST3	41399FG050	SPECIAL TOOL SLEEVE
ST4	41399FG080	SPECIAL TOOL BEARING
ST5	41399FG060	SPECIAL TOOL RING
ST6	41399FG010	SPECIAL TOOL A
ST7	41399FG030	SPECIAL TOOL C

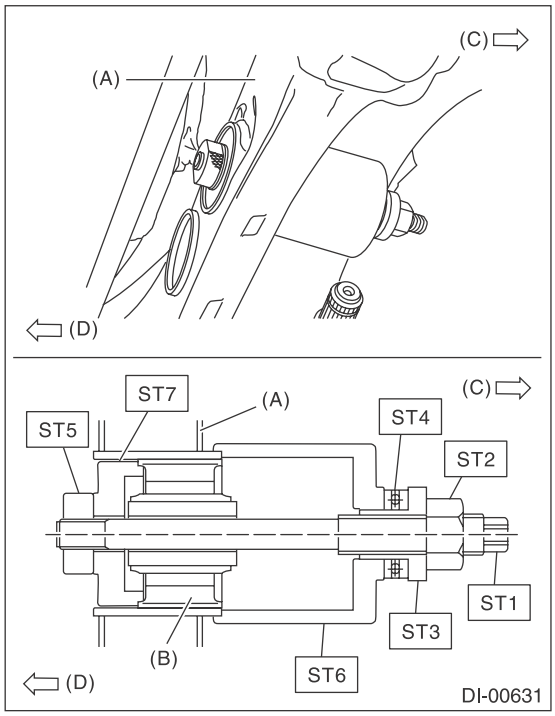

(A) Sub frame
(B) Rear differential mount bushing
(C) Front
(D) REAR

3) Install the rear differential mount bushing using ST1 — 7.
(1) From the SPECIAL TOOL ASSY (41399FG000), select the tool to be used for installation.
(2) Set the STs as shown in the illustration and tighten the ring of ST5 by hand until it stops.

CAUTION:
Be careful not to install the ST7 in a wrong direction.
(3) Secure the edge of the shaft of ST1 with a spanner, tighten the nut of ST2, and press-fit the ST6 until it contacts the end face of sub frame.

CAUTION:
• Turning the shaft of ST1 may loosen the ST5 and damage a ST. Be sure to secure the ST1.

• Be careful not to damage a ST by tightening the nut of ST2 further after the ST6 contacts the end face of sub frame.

ST1	41399FG090	SPECIAL TOOL SHAFT
ST2	41399FG070	SPECIAL TOOL NUT
ST3	41399FG050	SPECIAL TOOL SLEEVE
ST4	41399FG080	SPECIAL TOOL BEARING
ST5	41399FG060	SPECIAL TOOL RING
ST6	41399FG020	SPECIAL TOOL B
ST7	41399FG040	SPECIAL TOOL D

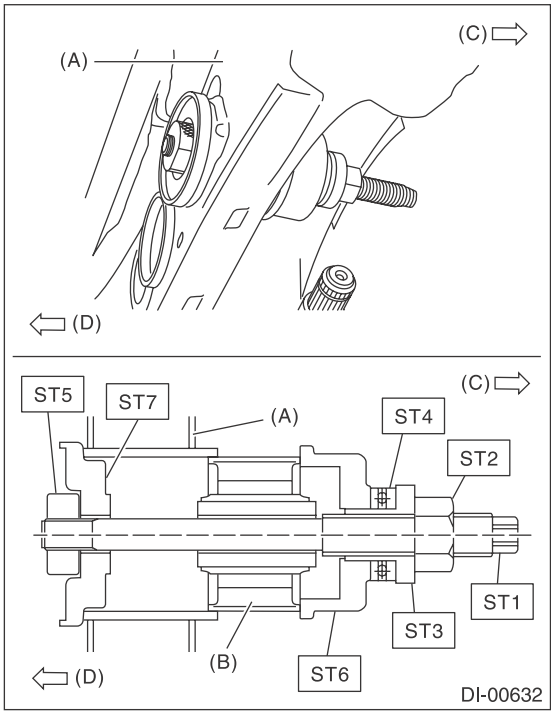

(A) Sub frame
(B) Rear differential mount bushing
(C) Front
(D) REAR

4) Install the rear differential. <Ref. to DI-28, INSTALLATION, Rear Differential (T-type).> <Ref. to DI-45, INSTALLATION, Rear Differential (VA-type).>

10. Rear Differential Inspection Mode

A: GENERAL DESCRIPTION

CAUTION:
Be sure to perform Rear Differential Inspection Mode.

- Follow the messages displayed on the Subaru Select Monitor when working.
- "Rear Differential Inspection Mode" using the Subaru Select Monitor is available only for the CVT model.
- Perform Rear Differential Inspection Mode when the following work has been performed.

Transmission assembly replacement/Replacement of rear differential/Replacement of front differential hypoid gear set/Replacement of rear differential hypoid gear set

B: PROCEDURE

CAUTION:
Do not turn the power of the Subaru Select Monitor OFF during work, and do not disconnect the data link connector.

1) Shift the select lever to "P" range.
2) Apply the electronic parking brake.
3) Lift up the vehicle.

WARNING:
Lift up the vehicle until the tire bottom is 30 cm or more above the ground.

4) Connect the Subaru Select Monitor to data link connector.
5) Turn the ignition switch to ON. (In the case of a push button start, press the push button ignition switch twice without stepping on the brake.)
6) Select {AT related learning & inspecting mode} in the «Transmission Diagnosis» screen of the Subaru Select Monitor.
7) Select {Rear differential inspection mode} in the «Learning and inspection mode related to AT» display screen of the Subaru Select Monitor.
8) Follow the messages displayed on the Subaru Select Monitor screen when working.
9) The results of the rear differential inspection mode are displayed on the Subaru Select Monitor screen.

- When ended normally: «Rear differential has been replaced successfully.»
- When ended abnormally: «Rear differential error is detected. Check the items for rear differential installation again.»
- When interrupted: «Inspection interrupted. Start this inspection mode over again from the beginning.»

10) After the message «Inspection completed. Turn off the IG SW.» appears, the rear differential inspection mode completes.

NOTE:
• For details concerning the operation procedure, refer to “PC application help for Subaru Select Monitor”.
• If the rear differential inspection mode does not end normally, repeat the mode until it ends normally.
• When the inspection mode does not end normally, the AWD warning light will start blinking at 2 Hz.
• When the inspection mode ends abnormally, the front differential and rear differential may be different from the specifications for the vehicle.
• When the inspection mode is interrupted, the following reasons are possible.

Message	Main reasons for abnormal termination
• “Inspection interrupted.” • «Inspection interrupted. Start this inspection mode over again from the beginning.»	• TCM has detected a failure. • VDC has a failure. • Brake is applied after start during automatic running. • Too delayed operation to the instructions displayed on the Subaru Select Monitor.
“TCM incompatible. Rear differential inspection mode canceled.”	The model does not support the rear differential inspection mode.
TCM has detected a failure. Inspect according to the manual.	TCM has detected a failure.

11) Perform “Function Check Sequence” for VDC. <Ref. to VDC(diag)-17, FUNCTION CHECK, OPERATION, Subaru Select Monitor.> <Ref. to VDC-10, ADJUSTMENT, VDC Control Module and Hydraulic Control Unit (VDCCM&H/U).>

11.General Diagnostic Table

A: INSPECTION

Symptom or trouble	Possible cause	Remedy
1. Oil leakage	(1) Worn, scratched, or incorrectly seated front or side oil seal. Scored, battered or excessively worn sliding surface of companion flange.	Repair or replace.
	(2) Clogged or damaged air breather.	Clean, repair or replace.
	(3) Loose bolts on differential spindle or side retainer, or incorrectly fitted O-ring.	Tighten the bolts to specified torque. Replace the O-ring.
	(4) Loose rear cover attachment bolts or damaged gasket.	Tighten the bolts to specified torque. Replace gasket and apply liquid gasket.
	(5) Loose oil filler or oil drain plug.	Retighten and apply liquid gasket.
	(6) Wear, damage or incorrect fitting of spindle, side retainer or oil seal.	Repair or replace.
2. Seizure NOTE: Seized or damaged parts should be replaced, and also other parts should be thoroughly checked for any defect and should be repaired or replaced as required.	(1) Insufficient backlash for hypoid gear.	Readjust or replace.
	(2) Excessive preload for side, rear or front bearing.	Readjust or replace.
	(3) Insufficient or improper oil used.	Add recommended differential gear oil to the specified level.
3. Damage NOTE: Damaged parts should be replaced, and also other parts should be thoroughly checked for any defect and should be repaired or replaced as required.	(1) Improper backlash for hypoid gear.	Replace.
	(2) Insufficient or excessive preload for side, rear or front bearing.	Readjust or replace.
	(3) Excessive backlash for differential gear.	Replace gear or thrust washer.
	(4) Loose bolts and nuts such as hypoid driven gear bolt	Retighten.
	(5) Damage due to overloading.	Replace.
4. Noises when starting or shifting gears NOTE: Noises may be caused by differential assembly, universal joint, wheel bearing, etc. Find out what is actually making noise before disassembling.	(1) Excessive backlash for hypoid gear.	Readjust.
	(2) Improper tooth contact of hypoid gear.	Readjust. (Drive pinion adjustment and backlash adjustment)
	(3) Excessive backlash for differential gear.	Replace gear or thrust washer.
	(4) Insufficient preload for front or rear bearing.	Readjust.
	(5) Loose drive pinion nut.	Tighten to the specified torque.
	(6) Loose bolts and nuts such as side retainer attachment bolt.	Tighten to the specified torque.
5. Noises when cornering	(1) Damaged differential gear.	Replace.
	(2) Excessive wear or damage of thrust washer.	Replace.
	(3) Broken pinion mate shaft.	Replace.
	(4) Seized or damaged side bearing.	Replace.

Symptom or trouble	Possible cause	Remedy
6. Gear Noise NOTE: Since noises from engine, muffler, transmission, propeller shaft, wheel bearings, tires, and body are sometimes mistaken for noises from differential assembly, be careful in checking them. Inspection methods to locate noises include coasting, accelerating, cruising, and jacking-up all four wheels. Perform these inspections according to the condition of trouble. When listening to noises, shift gears into four wheel drive and fourth speed position, trying to pick up only differential noise.	(1) Improper tooth contact of hypoid gear.	Readjust or replace hypoid gear set.
	(2) Improper backlash of the hypoid gear.	Readjust.
	(3) Scored or chipped teeth of hypoid gear.	Replace hypoid gear set.
	(4) Seized hypoid gear.	Replace hypoid gear set.
	(5) Improper preload for front or rear bearings.	Readjust.
	(6) Seized, cut-away or chipped front or rear bearing.	Replace.
	(7) Seized, cut-away or chipped side bearing.	Replace.
	(8) Vibrating differential gear.	Replace.

TRANSFER CASE

TC

Page

1. General Description 2
2. Transfer Case and Extension Case Assembly 3
3. Transfer Clutch 4
4. Extension Case 5
5. Oil Seal 6
6. Transfer Drive Gear 7
7. Transfer Driven Gear 8
8. Center Differential Carrier 9
9. Reduction Driven Gear 10
10. Center Differential 11
11. Transfer Clutch Pressure Test 12

1. General Description

A: NOTE

For general description, refer to “5AT”, “CVT” or “6MT” section.
5AT model:
<Ref. to 5AT-2, General Description.>
CVT model:
<Ref. to CVT-3, General Description.>
6MT model:
<Ref. to 6MT-2, General Description.>

2. Transfer Case and Extension Case Assembly

A: NOTE

For removal, installation and inspection, refer to “6MT” section. <Ref. to 6MT-39, Transfer Case and Extension Case Assembly.>

3. Transfer Clutch

A: NOTE

For removal, installation and inspection, refer to “5AT” or “CVT” section.
5AT model:
<Ref. to 5AT-68, Transfer Clutch.>
CVT model:
<Ref. to CVT-148, Transfer Clutch.>

4. Extension Case

A: NOTE

For removal, installation and inspection, refer to “5AT” or “CVT” section.
5AT model:
<Ref. to 5AT-66, Extension Case.>
CVT model:
<Ref. to CVT-140, Extension Case.>

5. Oil Seal

A: NOTE

For replacement and inspection, refer to “5AT”, “CVT” or “6MT” section.
5AT model:
<Ref. to 5AT-48, Extension Case Oil Seal.>
CVT model:
<Ref. to CVT-88, Extension Case Oil Seal.>
6MT model:
<Ref. to 6MT-33, Oil Seal.>

6. Transfer Drive Gear

A: NOTE

For removal, installation and inspection, refer to “6MT” section. <Ref. to 6MT-45, Transfer Drive Gear.>

7. Transfer Driven Gear

A: NOTE

For removal, installation and inspection, refer to “6MT” section. <Ref. to 6MT-47, Transfer Driven Gear.>

8. Center Differential Carrier

A: NOTE

For removal, installation and inspection, refer to “5AT” section. <Ref. to 5AT-74, Center Differential Carrier.>

9. Reduction Driven Gear

A: NOTE

For removal, installation and inspection, refer to “5AT” or “CVT” section.
5AT model:
<Ref. to 5AT-71, Reduction Driven Gear.>
CVT model:
<Ref. to CVT-160, Transfer Reduction Driven Gear.>

10.Center Differential

A: NOTE

For removal, installation and inspection, refer to “6MT” section. <Ref. to 6MT-49, Center Differential.>

11. Transfer Clutch Pressure Test

A: NOTE

For inspection, refer to “5AT” or “CVT” section.
5AT model:
<Ref. to 5AT-36, Transfer Clutch Pressure Test.>
CVT model:
<Ref. to CVT-52, Transfer Clutch Pressure Test.>

DRIVE SHAFT SYSTEM

DS

Page

1. General Description 2
2. Propeller Shaft 10
3. Front Axle 12
4. Front Hub Unit Bearing 16
5. Rear Axle 18
6. Rear Hub Unit Bearing 22
7. Front Drive Shaft 25
8. Rear Drive Shaft 30
9. General Diagnostic Table 35

1. General Description

A: SPECIFICATION

1. PROPELLER SHAFT

Car line			All models
Propeller shaft type			EDJ
Front propeller shaft Joint-to-joint length: L_1	mm (in)	CVT	578 (22.76)
		6MT	735.5 (28.96)
		5AT	562 (22.13)
Rear propeller shaft Joint-to-Joint length: L_2		mm (in)	828 (32.6)
Outer diameter of tube:	mm (in)	D_1	63.5 (2.500)
		D_2	57.5 (2.264)

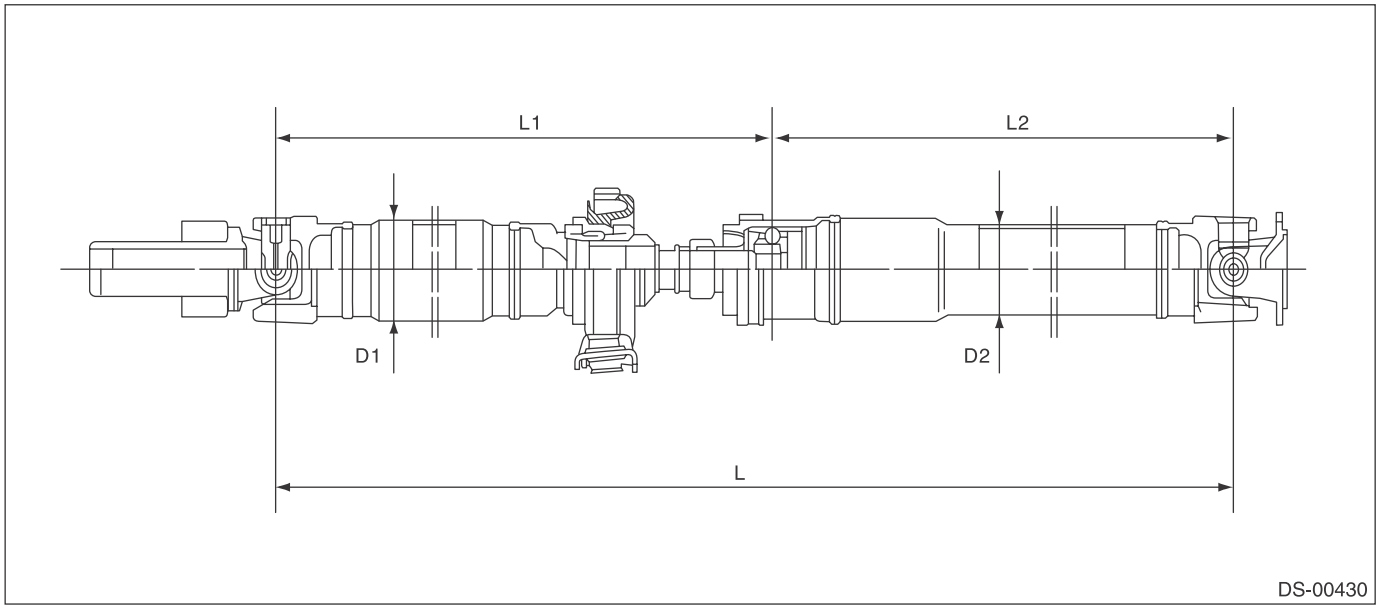

2. FRONT DRIVE SHAFT ASSEMBLY

Model	Type of drive shaft	Axle diameterϕ mm (in)	Axle length mm (in)
All models	AC + AAR	22.67 (0.89)	352.4 (13.87)

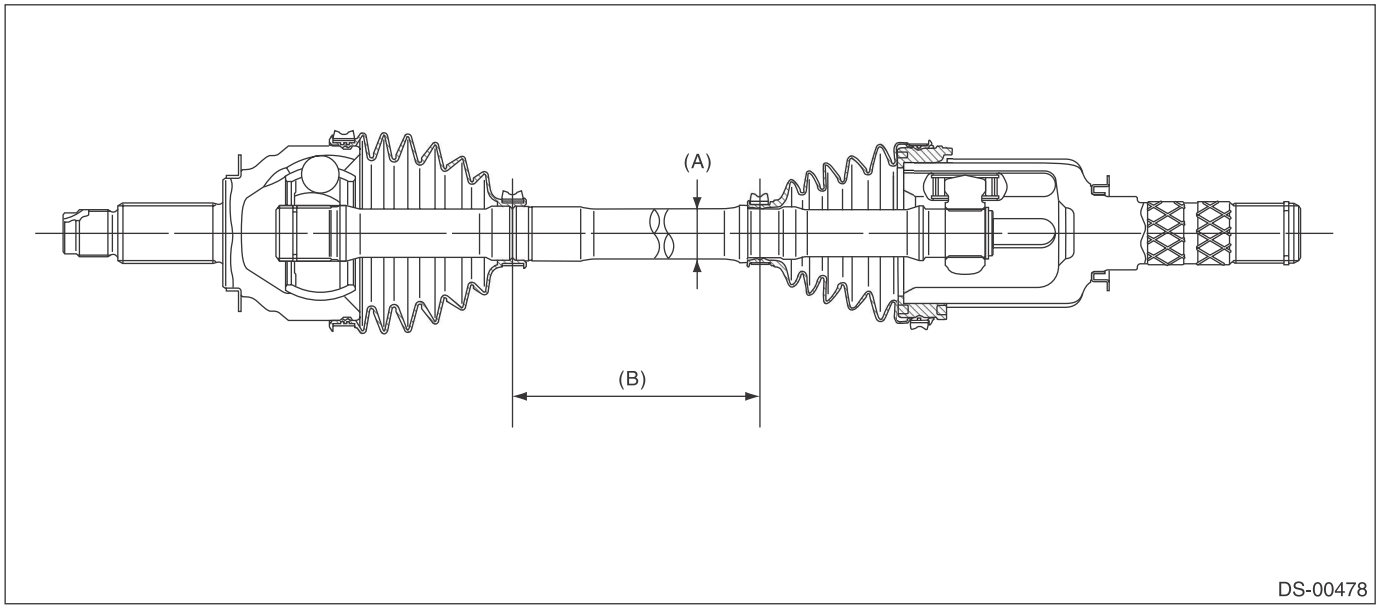

(A) Axle diameter (B) Axle length

3. REAR DRIVE SHAFT ASSEMBLY

Model	Type of drive shaft	Axle diameterϕ mm (in)	Axle length mm (in)
Sedan CVT	BJ + DOJ	22 (0.87)	400.6 (15.77)
Other than the above	EBJ + DOJ	22 (0.87)	394.3 (15.52)

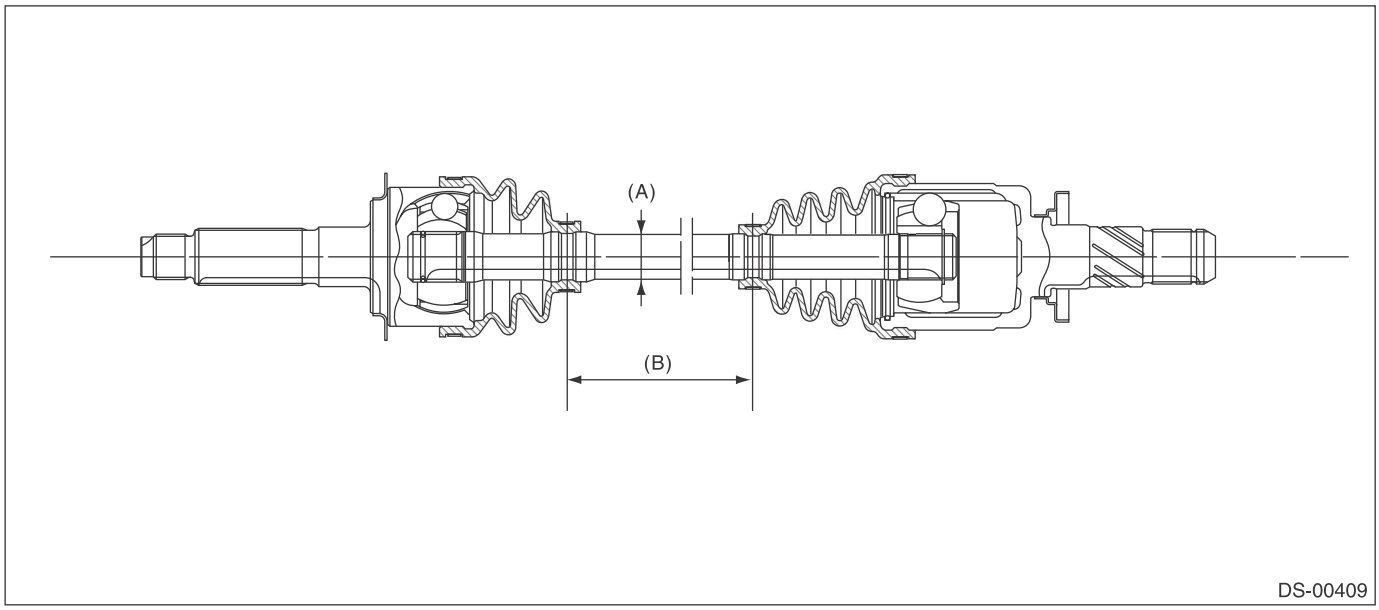

(A) Axle diameter (B) Axle length

B: COMPONENT

1. PROPELLER SHAFT

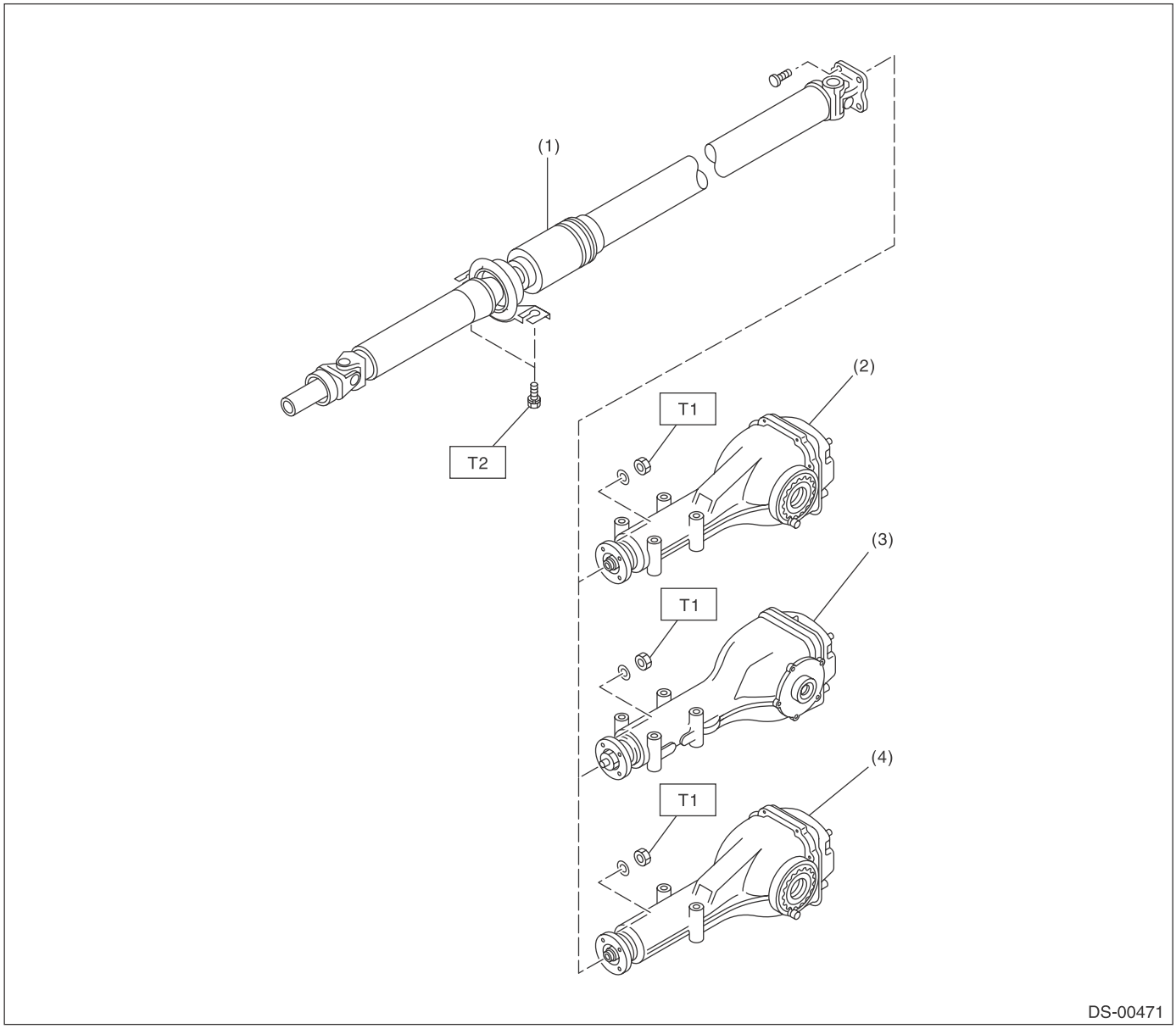

(1) Propeller shaft
(2) Rear differential (VA1-type)
(3) Rear differential (T-type)
(4) Rear differential (VA2-type)

Tightening torque:N·m (kgf-m, ft-lb)
T1: 31 (3.2, 22.9)
T2: 52 (5.3, 38.4)

2. FRONT AXLE

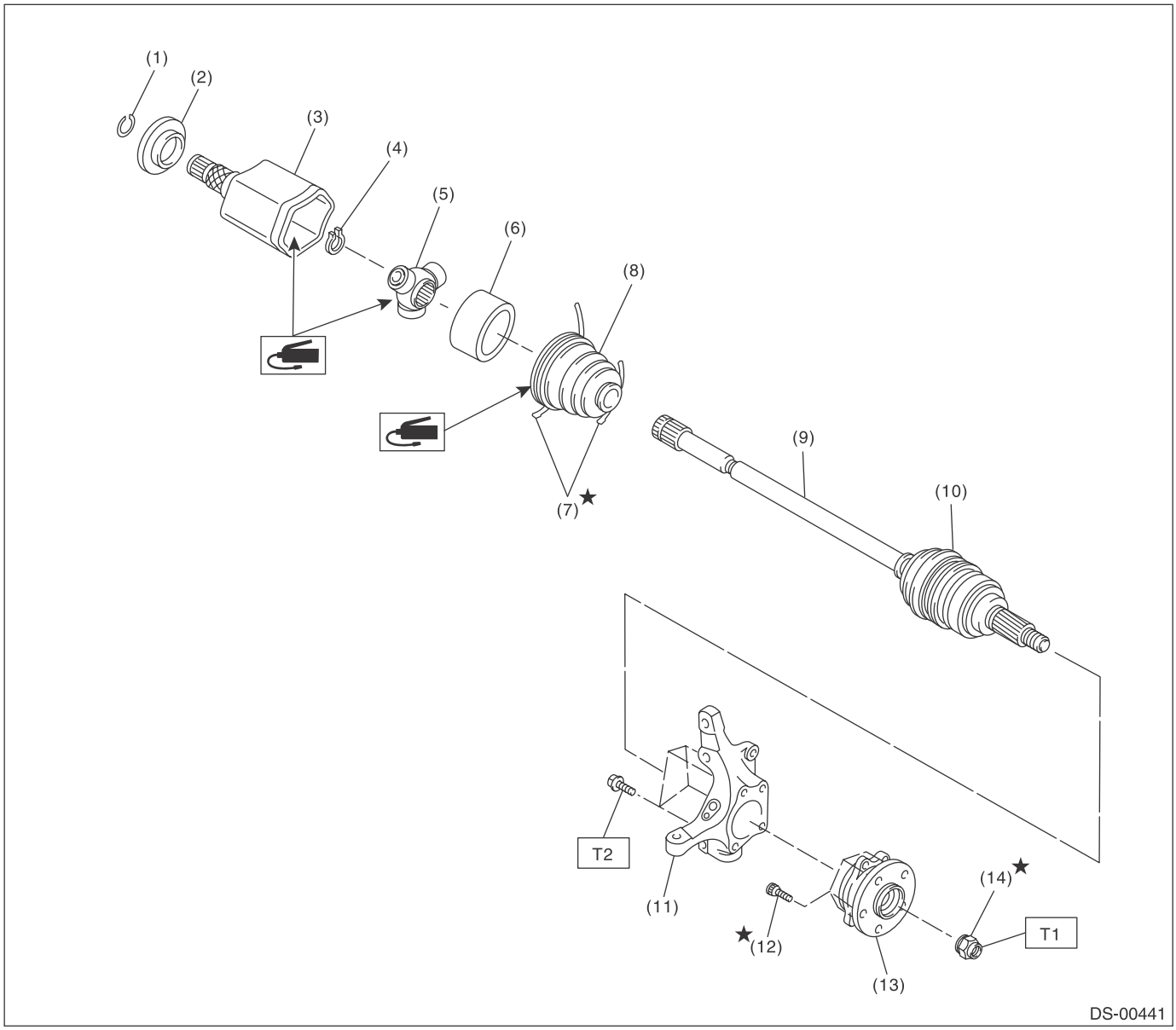

(1) Circlip
(2) Baffle plate
(3) Outer race (AAR)
(4) Snap ring
(5) Trunnion
(6) Grommet
(7) Boot band
(8) Boot (AAR)
(9) AC shaft ASSY
(10) Boot (AC)
(11) Housing
(12) Hub bolt
(13) Front hub unit bearing
(14) Axle nut

Tightening torque:N·m (kgf-m, ft-lb)	
T1:	*220 (22.4, 162.3)*
T2:	*65 (6.6, 47.9)*

3. REAR AXLE

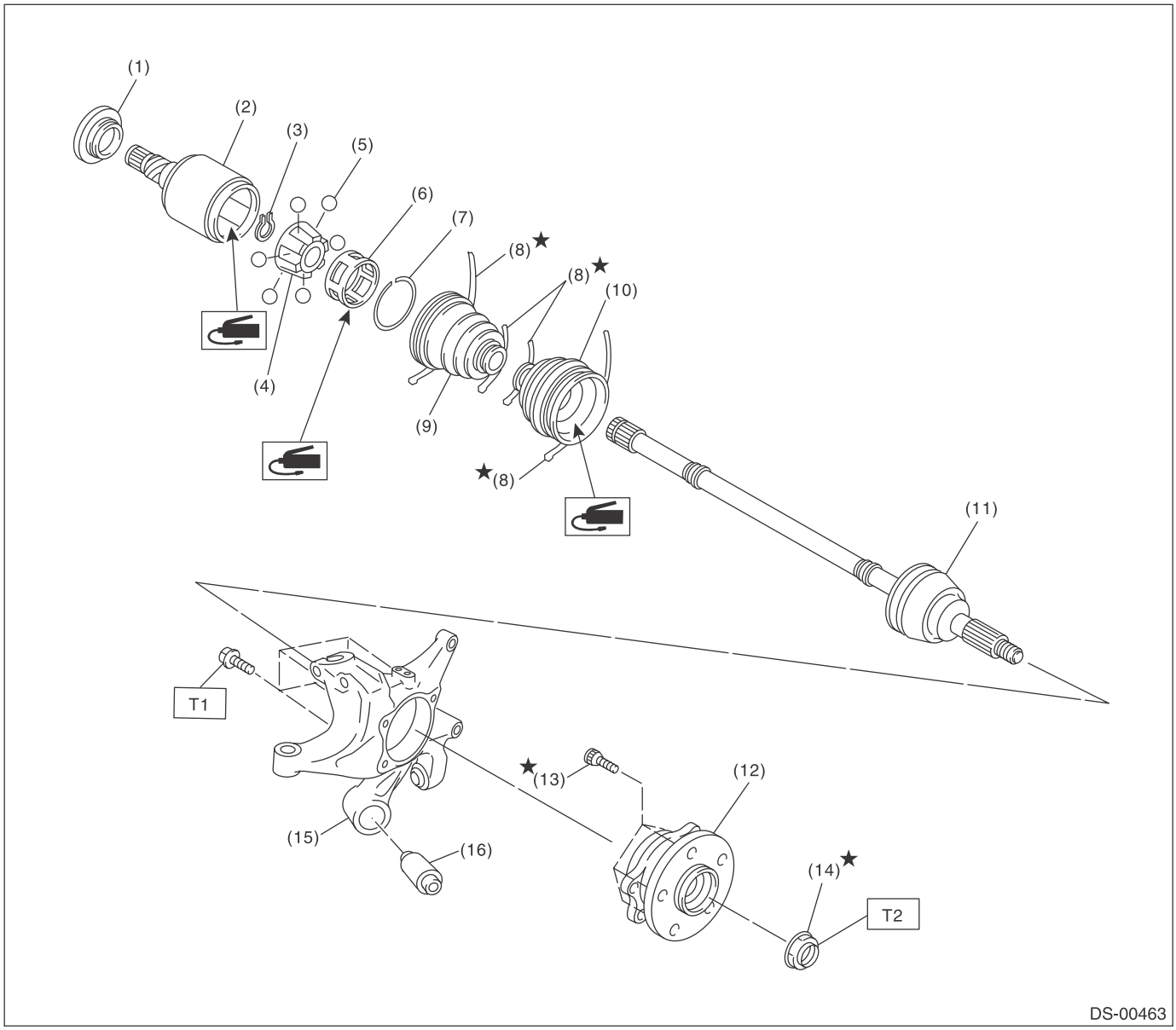

(1)	Baffle plate	(8)	Boot band	(14)	Axle nut
(2)	Outer race (DOJ)	(9)	Boot (DOJ)	(15)	Rear axle housing
(3)	Snap ring	(10)	Boot (BJ)	(16)	Rear bushing
(4)	Inner race	(11)	BJ shaft ASSY (Sedan CVT model) EBJ shaft ASSY (Except for sedan CVT model)		
(5)	Ball			***Tightening torque:N·m (kgf-m, ft-lb)***	
(6)	Cage	(12)	Rear hub unit bearing	***T1:***	***65 (6.6, 47.9)***
(7)	Snap ring	(13)	Hub bolt	***T2:***	***240 (24.5, 177)***

C: CAUTION

• Wear appropriate work clothing, including a cap, protective goggles and protective shoes when performing any work.
• Remove contamination including dirt and corrosion before removal, installation or disassembly.
• Keep the disassembled parts in order and protect them from dust and dirt.
• Before removal, installation or disassembly, be sure to clarify the failure. Avoid unnecessary removal, installation, disassembly and replacement.
• Vehicle components are extremely hot after driving. Be wary of receiving burns from heated parts.
• Use SUBARU genuine grease etc. or equivalent. Do not mix grease etc. of different grades or manufacturers.
• Be sure to tighten fasteners including bolts and nuts to the specified torque.
• Place shop jacks or rigid racks at the specified points.
• Apply grease onto sliding or revolving surfaces before installation.
• Before installing snap rings, apply sufficient amount of grease to avoid damage and deformation.
• Before securing a part on a vise, place cushioning materials such as wood blocks, aluminum plates, or waste cloth between the part and the vise.

D: PREPARATION TOOL

1. SPECIAL TOOL

ILLUSTRATION	Part number	DESCRIPTION	REMARKS
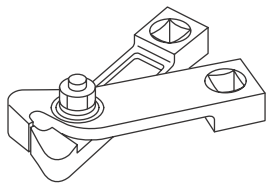 ST28099AC000	28099AC000	BOOT BAND PLIER	Used for tightening the boot band. (Front boot band)
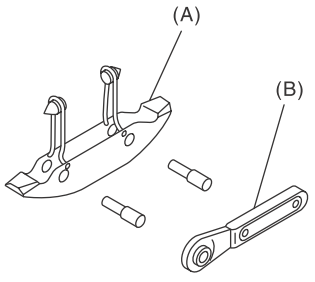 ST-925091000	925091000	BAND TIGHTENING TOOL	Used for tightening the boot band. (A) Jig for the band (B) Ratchet wrench

ILLUSTRATION	Part number	DESCRIPTION	REMARKS
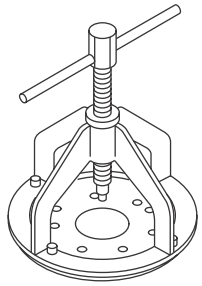 ST-926470000	926470000	AXLE SHAFT PULLER	• Used for removing the axle shaft. • Used together with AXLE SHAFT PULLER PLATE (28099PA110).
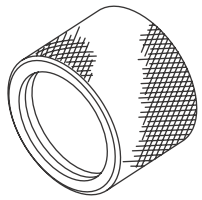 ST18675AA000	18675AA000	DIFFERENTIAL SIDE OIL SEAL INSTALLER	Used for installing the differential side retainer oil seal.
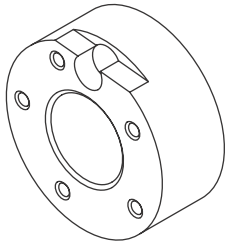 ST-927080000	927080000	HUB STAND	Used for assembling hub bolt in hub.
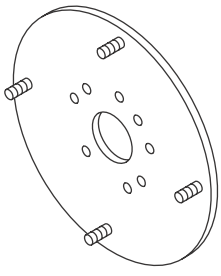 ST28099PA110	28099PA110	AXLE SHAFT PULLER PLATE	Exchange with the plate of the AXLE SHAFT PULLER (926470000) to use.
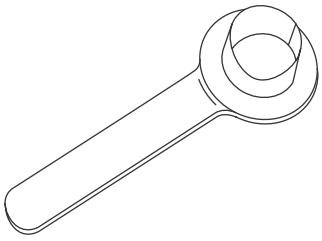 ST28099PA090	28099PA090	OIL SEAL PROTECTOR	• Used for installing the rear drive shaft to the rear differential. • For protecting the oil seal.

ILLUSTRATION	Part number	DESCRIPTION	REMARKS
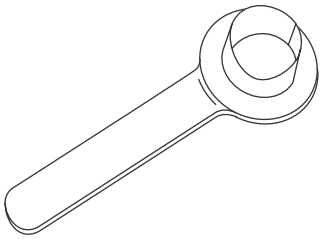 ST28399SA010	28399SA010	OIL SEAL PROTECTOR	• Used for installing front drive shaft into front differential. • For protecting the oil seal.
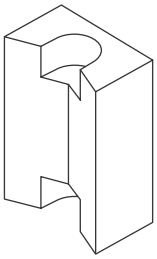 ST28399AG000	28399AG000	HUB STAND	Used for extracting hub bolt.

2. GENERAL TOOL

TOOL NAME	REMARKS
Puller	Used for removing the ball joint from knuckle arm.
Dial gauge	Used for inspecting the propeller shaft run-out.
Extension cap	Used for preventing leakage of gear oil or ATF.
Crowbar	Used for extracting drive shaft.

2. Propeller Shaft

A: REMOVAL

NOTE:
Before removing propeller shaft, wrap the metal parts attached to the rubber boot of center EDJ with a cloth or rubber material, as shown in the figure. The rubber boot may be damaged due to interference with adjacent metal parts while bending the EDJ during removal.

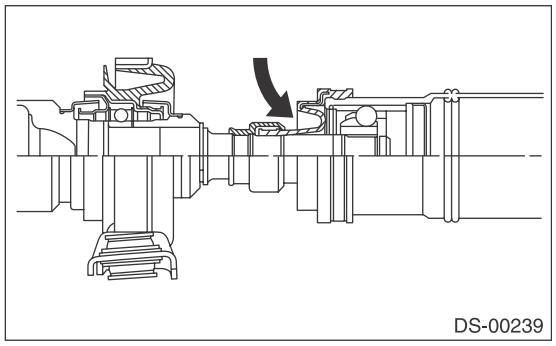

1) Shift the select lever or gear shift lever to neutral.
2) Release the parking brake.
3) Lift up the vehicle.
4) Remove the center exhaust pipe.
5) Remove the rear exhaust pipe and muffler.
6) Remove the heat shield cover.

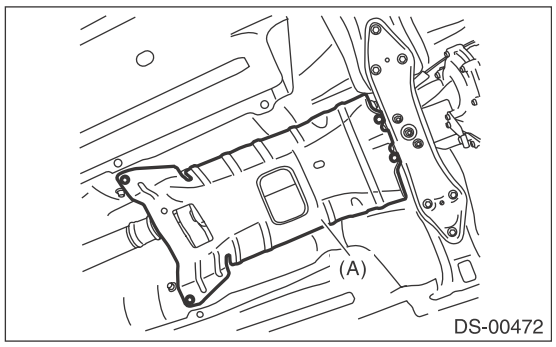

(A) Heat shield cover

7) Place alignment marks on the flange yoke and rear differential.
8) Remove four bolts holding the propeller shaft to the rear differential.

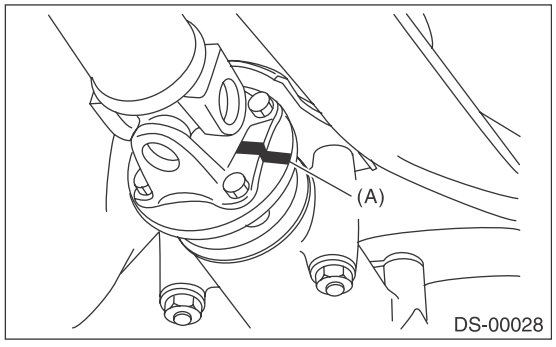

(A) Alignment mark

9) Remove the center bearing.

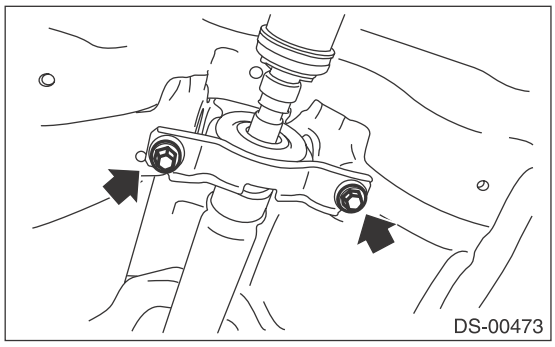

10) Remove the propeller shaft from transmission.

NOTE:
• Use a container to catch ATF or oil flowing from propeller shaft.
• To prevent ATF from leaking, install extension cap etc. to the transmission.

B: INSTALLATION

1) Insert the sleeve yoke into the transmission and attach center bearing to body.

Tightening torque:
52 N·m (5.3 kgf-m, 38.4 ft-lb)

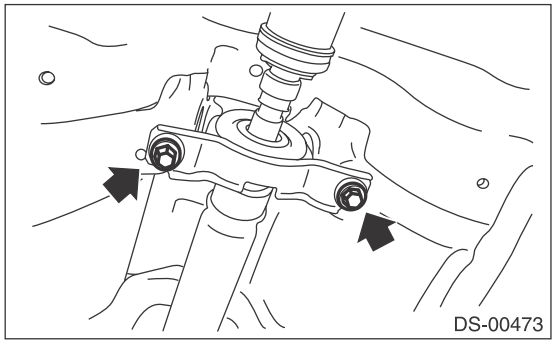

2) Align the alignment marks and connect the flange yoke and rear differential.

Tightening torque:
31 N·m (3.2 kgf-m, 22.9 ft-lb)

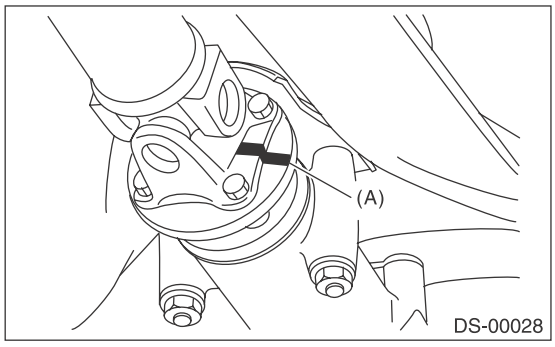

(A) Alignment mark

3) Install the heat shield cover.

Tightening torque:
18 N·m (1.8 kgf-m, 13.3 ft-lb)

4) Install the center exhaust pipe.
5) Install the rear exhaust pipe and muffler.
6) Lower the vehicle.

C: INSPECTION

NOTE:
Do not disassemble the propeller shaft. Check the following and replace if necessary.
- Tube surface for dents of cracks
- Splines for deformation or abnormal wear
- Unsmooth joint operation or abnormal noise
- Center bearing for free play, noise or non-smooth operation.
- Oil seals for abnormal wear or damage
- Damaged center bearing

Check the following points with propeller shaft installed in vehicle.

1. JOINTS AND CONNECTIONS

1) Remove the center exhaust pipe.
2) Remove the heat shield cover.
3) Check for any looseness of the yoke flange mounting bolts which connect to the rear differential and center bearing bracket mounting bolts.

2. SPLINES AND BEARING

1) Remove the center exhaust pipe.
2) Remove the rear exhaust pipe and muffler.
3) Remove the heat shield cover.
4) Turn the propeller shaft by hand to see if abnormal free play exists at splines. Also move yokes to see if abnormal free play exists at spiders and bearings.

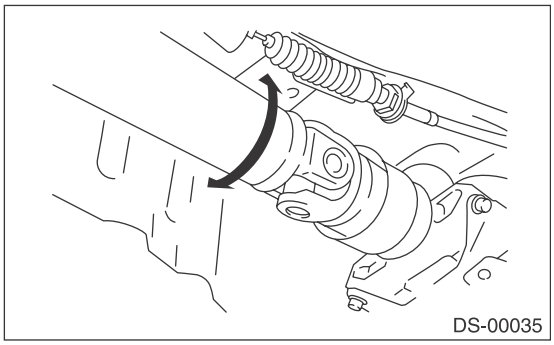

3. RUNOUT OF PROPELLER SHAFT

1) Remove the center exhaust pipe.
2) Remove the rear exhaust pipe and muffler.
3) Remove the heat shield cover.
4) Set the dial gauge with its indicator stem at the center of the propeller shaft tube.
5) Turn the propeller shaft slowly by hands to check for runout of the propeller shaft.

Runout:
Service limit 0.6 mm (0.024 in)

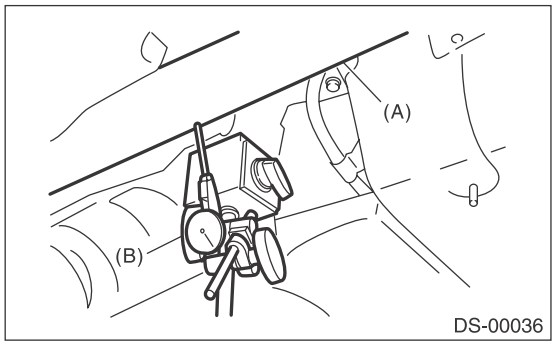

(A) Propeller shaft
(B) Dial gauge

4. CENTER BEARING FREE PLAY

1) Remove the front and center exhaust pipes.
2) Remove the rear exhaust pipe and muffler.
3) Remove the heat shield cover.
4) Move the propeller shaft near the center bearing up, down, left, right by hand, to check for any abnormal free play of the bearings.

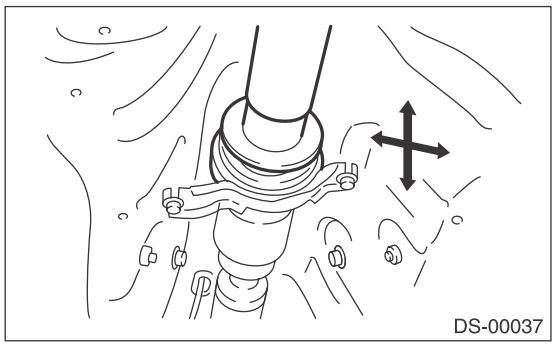

3. Front Axle

A: REMOVAL

1) Lift up the vehicle, and remove the front wheels.
2) Lift the crimped section of axle nut.

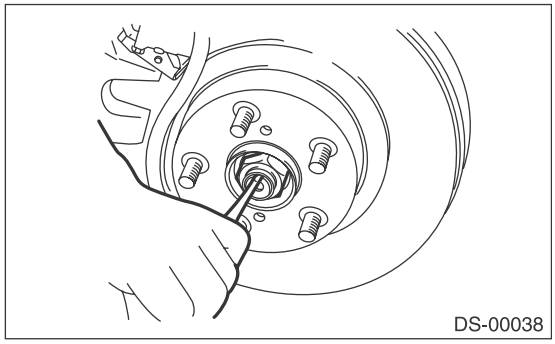

3) Remove the axle nut using a socket wrench while depressing the brake pedal.

CAUTION:
Do not loosen the axle nut while the front axle is loaded. Doing so may damage the hub bearing.

4) Remove the disc brake caliper from the housing, and suspend it from strut using a wire.

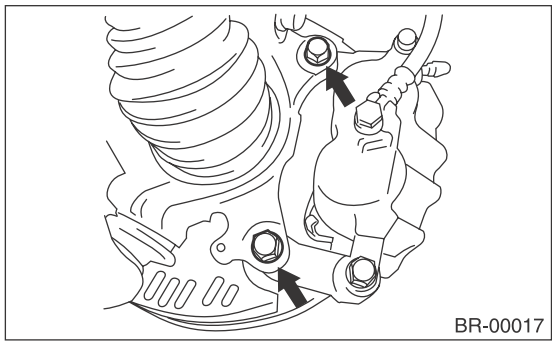

5) Remove the disc rotor.

NOTE:
If it is difficult to remove the disc rotor from the hub, drive the 8 mm bolt into the threaded end of rotor, and then remove the rotor.

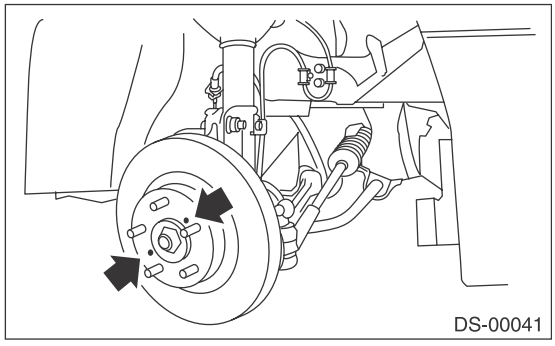

6) After removing the cotter pin and castle nut, use a puller to remove the tie-rod end from the front housing.

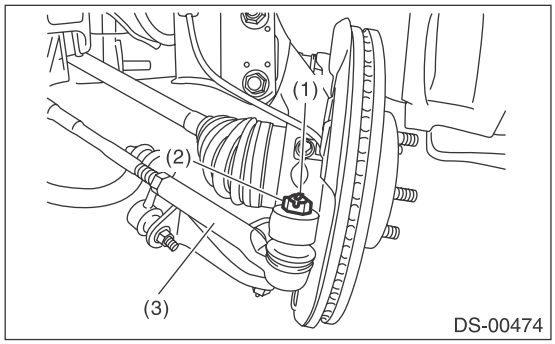

(1) Cotter pin
(2) Castle nut
(3) Tie-rod end

7) Remove the front ABS wheel speed sensor.

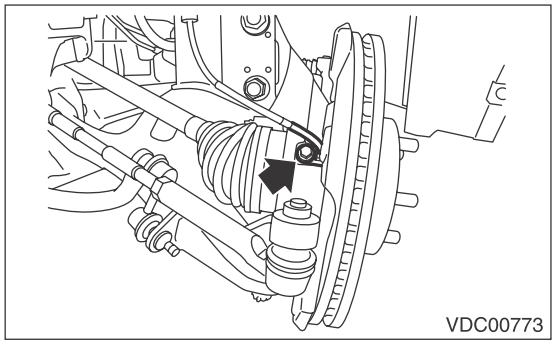

8) Remove the stabilizer link and ball joint.

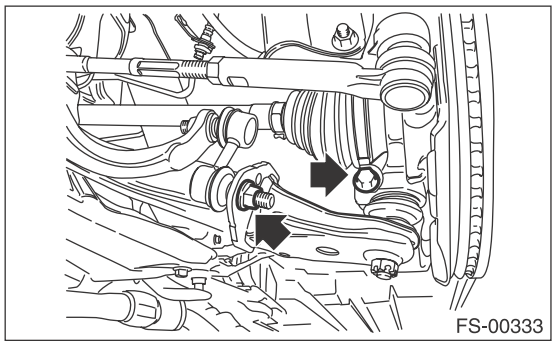

9) Remove the front drive shaft from the transmission.

10) Remove the front drive shaft assembly from the hub. If it is hard to remove, use the ST.

ST1	926470000	AXLE SHAFT PULLER
ST2	28099PA110	AXLE SHAFT PULLER PLATE

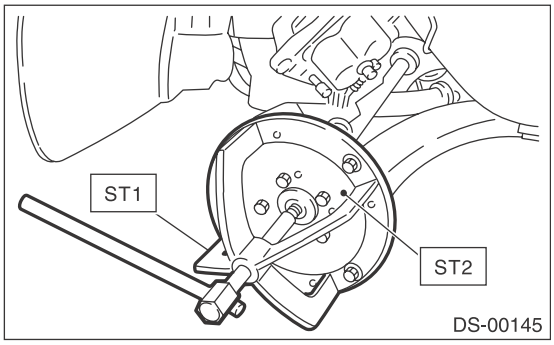

11) Place an alignment mark on the camber adjusting bolt and front housing.
12) Remove two bolts to remove the front housing from the strut.

B: INSTALLATION

1) Install the front drive shaft. <Ref. to DS-25, INSTALLATION, Front Drive Shaft.>
2) Install the ball joint into housing.

CAUTION:
Before tightening, make sure the lower side of housing and stepped section of ball joint are in contact.

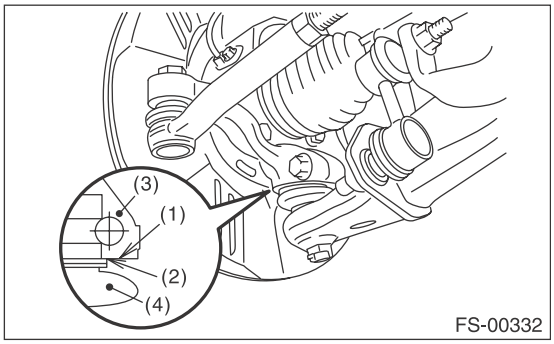

(1) Housing bottom
(2) Raised section of ball joint
(3) Housing
(4) Ball joint

Tightening torque:
50 N·m (5.1 kgf-m, 36.9 ft-lb)
3) Install the front ABS wheel speed sensor.

Tightening torque:
7.5 N·m (0.76 kgf-m, 5.5 ft-lb)
4) Install the disc rotor.
5) Install the disc brake.

Tightening torque:
120 N·m (12.2 kgf-m, 88.5 ft-lb)

6) Install the stabilizer link.

Tightening torque:
60 N·m (6.1 kgf-m, 44.3 ft-lb)
7) Install the tie-rod end ball joint to the front housing using a castle nut.

Tightening torque:
27 N·m (2.8 kgf-m, 19.9 ft-lb)

CAUTION:
When connecting the tie-rod, do not hit the cap at bottom of tie-rod end with a hammer.
8) Tighten the castle nut to specified torque and tighten further within 60° until the pin hole is aligned with the slot in the nut. Bend the cotter pin to lock.

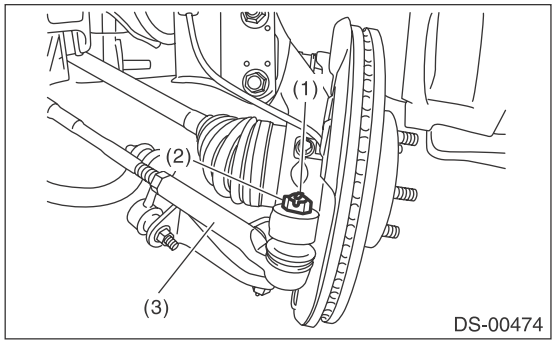

(1) Cotter pin
(2) Castle nut
(3) Tie-rod end

9) While depressing the brake pedal, tighten a new axle nut to the specified torque and lock it securely.

Tightening torque:
220 N·m (22.4 kgf-m, 162.3 ft-lb)

CAUTION:
Do not load the front axle before tightening the axle nut. Doing so may damage the hub bearing.
10) After tightening the axle nut, lock it securely.

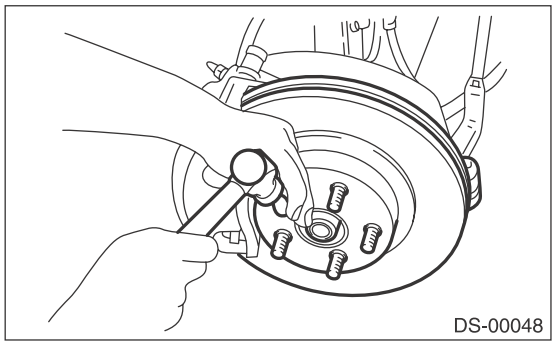

11) Install the wheel.

Tightening torque:
120 N·m (12.2 kgf-m, 88.5 ft-lb)

12) Inspect the wheel alignment and adjust if necessary.

C: DISASSEMBLY

1) Remove four bolts from the housing, and remove the front hub unit bearing and disc brake cover.

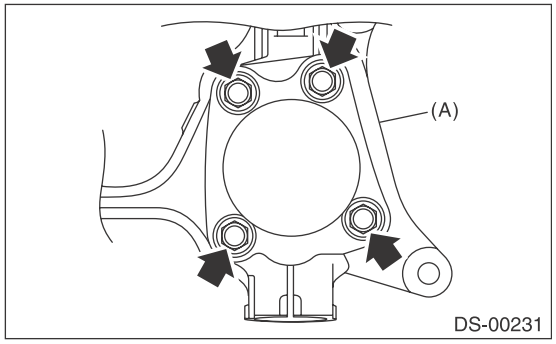

(A) Housing

CAUTION:
• Do not get closer the tool which charged magnetism to magnetic encoder.
• Be careful not to damage the magnetic encoder.

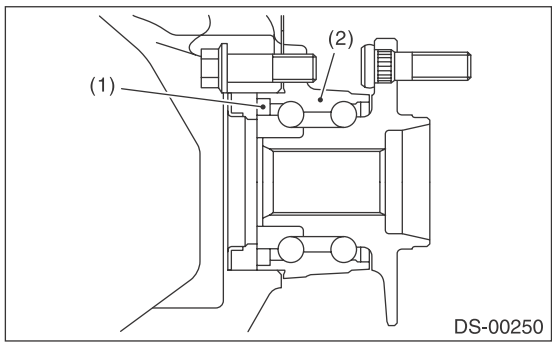

(1) Magnetic encoder
(2) Front hub unit bearing

2) Disassemble the front hub unit bearing. <Ref. to DS-17, DISASSEMBLY, Front Hub Unit Bearing.>

D: ASSEMBLY

1) Assemble the front hub unit bearing. <Ref. to DS-17, ASSEMBLY, Front Hub Unit Bearing.>
2) Place the disc brake cover between housing and front hub unit, and tighten the four bolts.

Tightening torque:
65 N·m (6.6 kgf-m, 47.9 ft-lb)

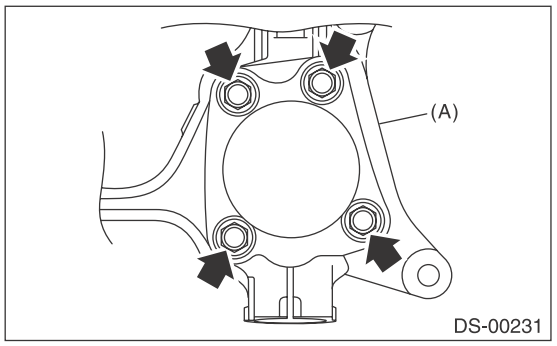

(A) Housing

CAUTION:
• Do not get closer the tool which charged magnetism to magnetic encoder.
• Be careful not to damage the magnetic encoder.

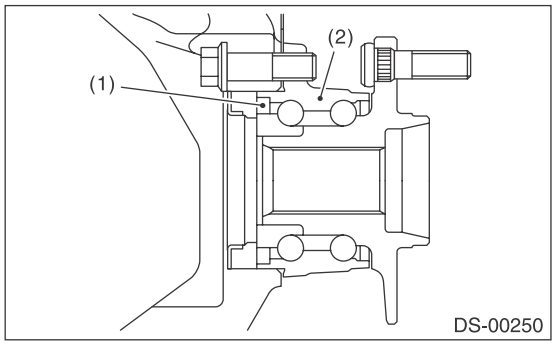

(1) Magnetic encoder
(2) Front hub unit bearing

E: INSPECTION

1) While moving the front tire up and down by hand, check if there is no free play in the bearing, and make sure the wheel rotates smoothly.

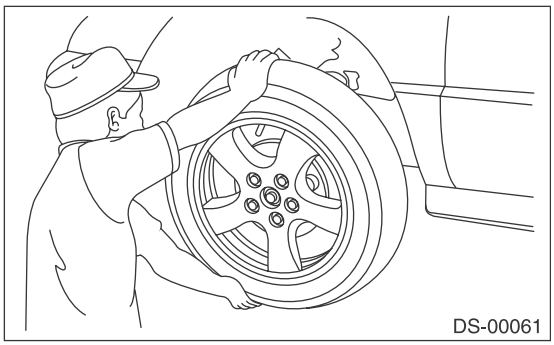
DS-00061

2) Inspect the play in axial direction using a dial gauge. Replace the bearing if the load range exceeds the limitation.

Service limit:
Maximum: 0.05 mm (0.0020 in)

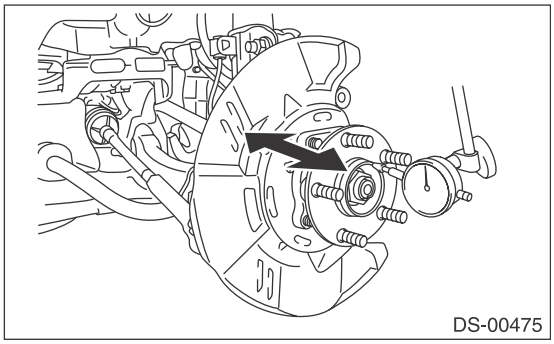
DS-00475

4. Front Hub Unit Bearing

A: REMOVAL

1) Lift up the vehicle, and remove the front wheels.
2) Lift the crimped section of axle nut.

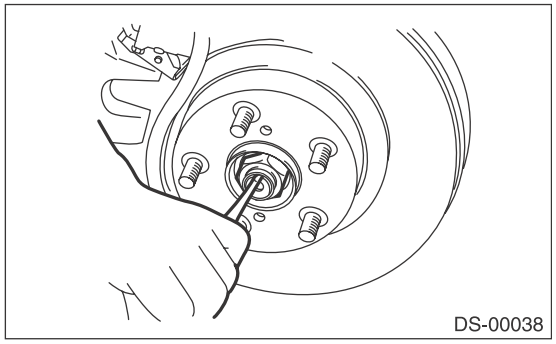

3) Remove the axle nut using a socket wrench while depressing the brake pedal.

CAUTION:
Do not loosen the axle nut while the front axle is loaded. Doing so may damage the hub bearing.

4) Remove the front ABS wheel speed sensor.

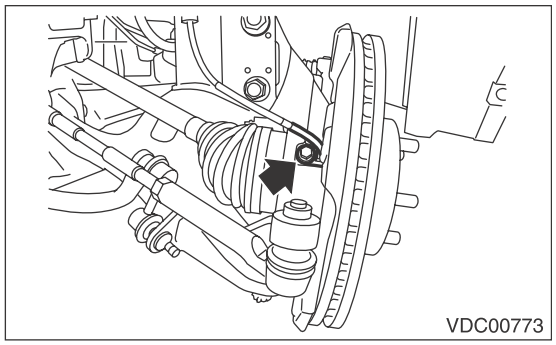

5) Remove the front disc brake and hang it to the front strut.
6) Remove the disc rotor.

NOTE:
If it is difficult to remove the disc rotor, drive the 8 mm bolt into the threaded end of rotor, and remove the rotor.

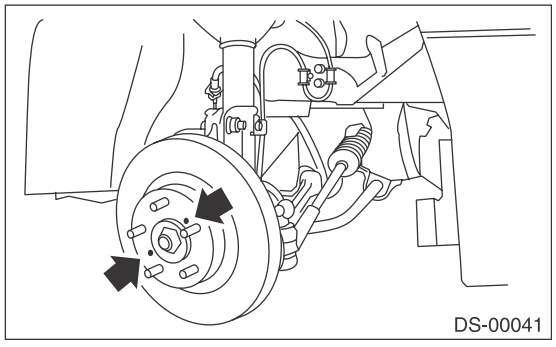

7) Remove the four bolts from the housing.

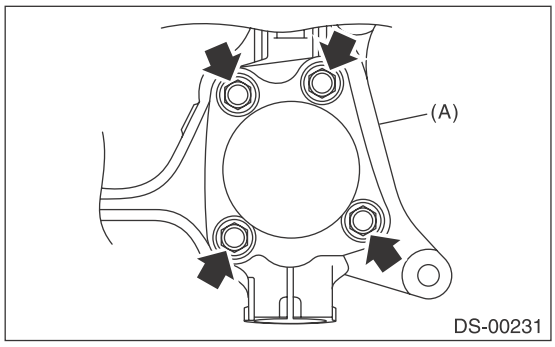

(A) Housing

CAUTION:
• Do not get closer the tool which charged magnetism to magnetic encoder.
• Be careful not to damage the magnetic encoder.

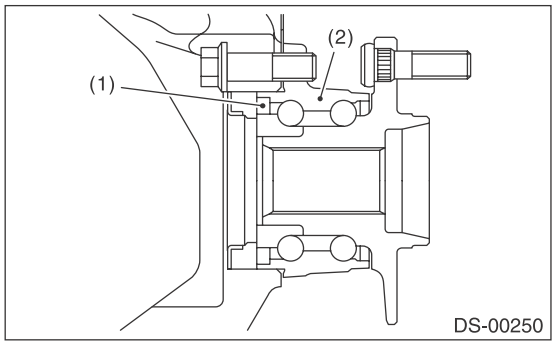

(1) Magnetic encoder
(2) Front hub unit bearing

8) Remove the front hub unit bearing. If it is hard to remove, use the ST.

ST1	926470000	AXLE SHAFT PULLER
ST2	28099PA110	AXLE SHAFT PULLER PLATE

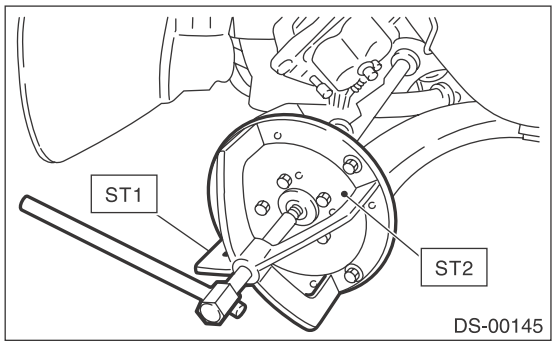

B: INSTALLATION

1) Place the disc brake cover between housing and front hub unit, and tighten the four bolts.

Tightening torque:
65 N·m (6.6 kgf-m, 47.9 ft-lb)

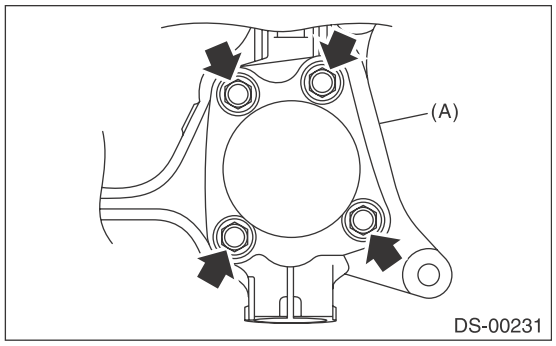

(A) Housing

2) Install the front drive shaft. <Ref. to DS-25, INSTALLATION, Front Drive Shaft.>
3) Tighten the axle nut temporarily.
4) Install the disc rotor to hub.
5) Install the disc brake caliper on the housing.

Tightening torque:
120 N·m (12.2 kgf-m, 88.5 ft-lb)
6) Install the front ABS wheel speed sensor.

Tightening torque:
7.5 N·m (0.76 kgf-m, 5.5 ft-lb)
7) While depressing the brake pedal, tighten a new axle nut to the specified torque and lock it securely.

Tightening torque:
220 N·m (22.4 kgf-m, 162.3 ft-lb)

CAUTION:
Do not load the front axle before tightening the axle nut. Doing so may damage the hub bearing.
8) After tightening the axle nut, lock it securely.

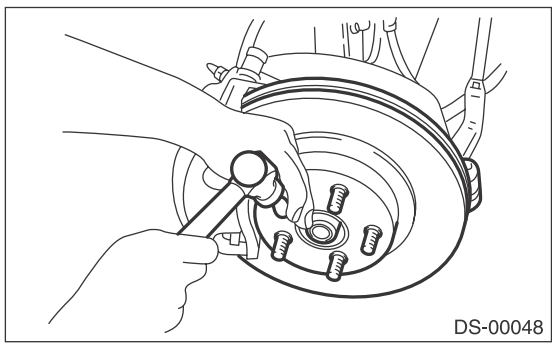

9) Install the wheel.

Tightening torque:
120 N·m (12.2 kgf-m, 88.5 ft-lb)

C: DISASSEMBLY

Using the ST and a hydraulic press, push out the hub bolts.
ST 28399AG000 HUB STAND

CAUTION:
- **Be careful not to hammer the hub bolts. This may deform the hub.**
- **Do not reuse the hub bolt.**

NOTE:
Since the hub unit bearing can not be disassembled, only hub bolts can be removed.

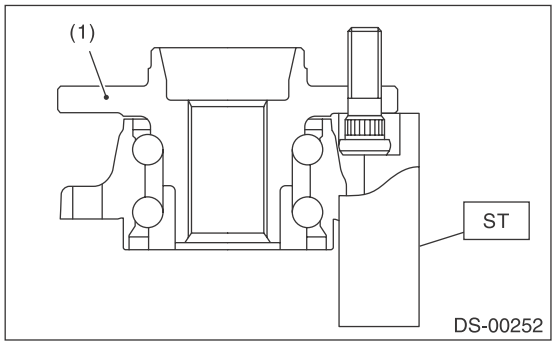

(1) Front hub unit bearing

D: ASSEMBLY

1) Attach the hub to the ST securely.
ST 927080000 HUB STAND

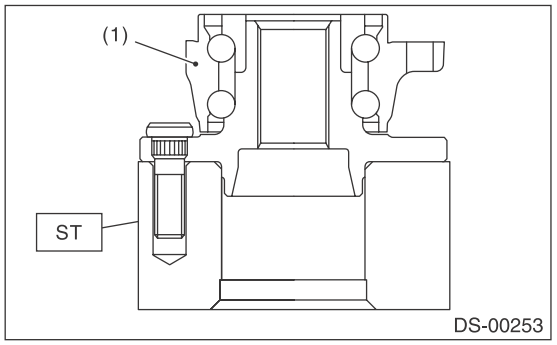

(1) Front hub unit bearing

2) Using a press, press the new hub bolts until their seating surfaces contact the hub.

NOTE:
Use the 12 mm (0.47 in) dia. holes in the HUB STAND to prevent bolts from tilting.

E: INSPECTION

Refer to “Front Axle” for inspection procedures. <Ref. to DS-15, INSPECTION, Front Axle.>

CAUTION:
If there is any fault in the bearing, replace hub unit bearing.

5. Rear Axle

A: REMOVAL

1) Lift up the vehicle, and then remove the rear wheels.
2) Lift the crimped section of axle nut.

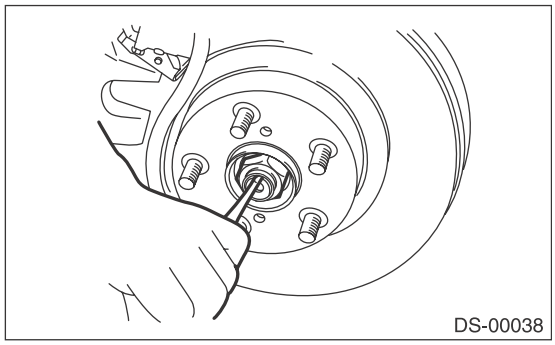
DS-00038

3) Remove the axle nut using a socket wrench while depressing the brake pedal.

CAUTION:
Do not loosen the axle nut while the rear axle is loaded. Doing so may damage the hub bearing.
4) Remove the brake hose bracket and rear ABS wheel speed sensor.

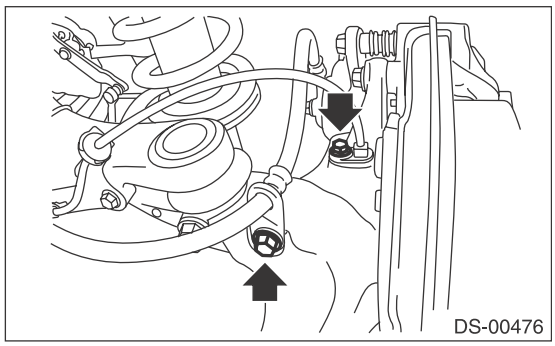
DS-00476

5) Remove the disc brake caliper from the rear housing, and suspend it from the vehicle using ropes.

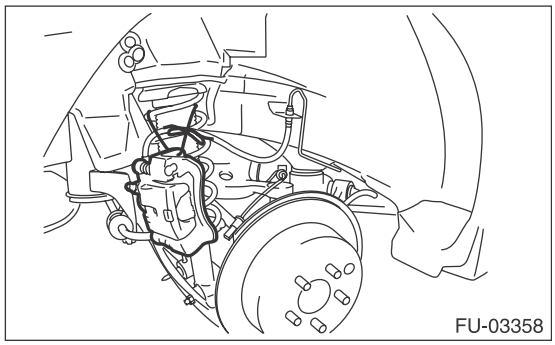
FU-03358

6) Remove the rear disc rotor.
7) Remove four bolts from the rear housing.

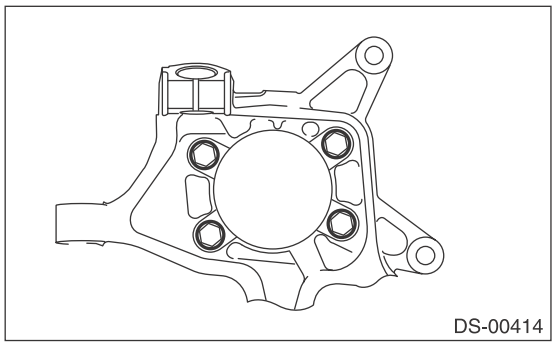
DS-00414

8) Remove the rear hub unit bearing.

CAUTION:
• Be careful not to damage the magnetic encoder.
• Do not get closer the tool which charged magnetism to magnetic encoder.

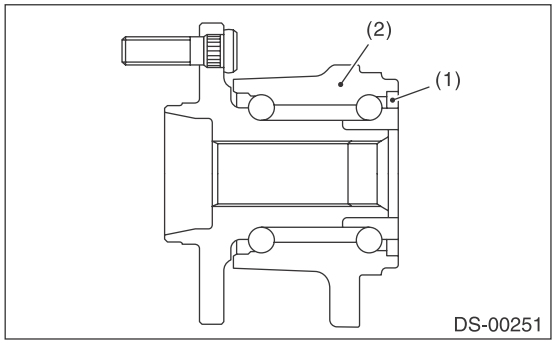

DS-00251

(1) Magnetic encoder
(2) Rear hub unit bearing

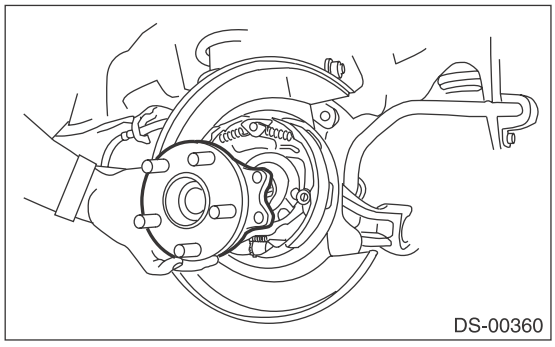
DS-00360

NOTE:
If it is hard to remove, use the ST.

ST1	926470000	AXLE SHAFT PULLER
ST2	28099PA110	AXLE SHAFT PULLER PLATE

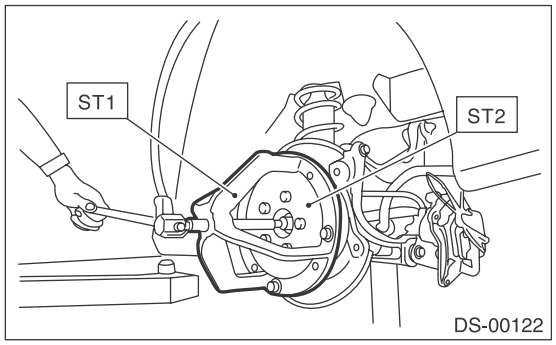

9) Remove the snap pin and nut from the front lateral link.

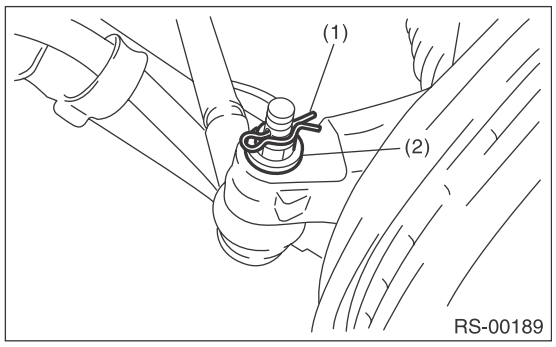

(1) Snap pin
(2) Nut

10) Separate the rear housing and ball joint using a puller.

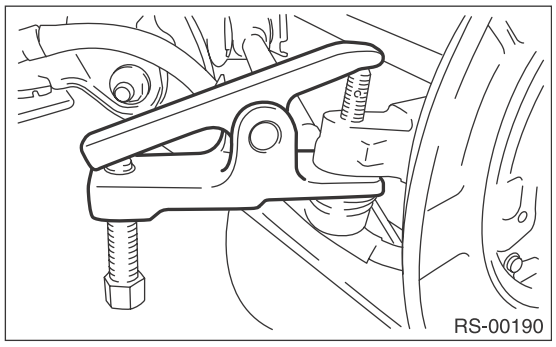

11) Separate the upper arm, trailing link and rear lateral link from the rear housing.

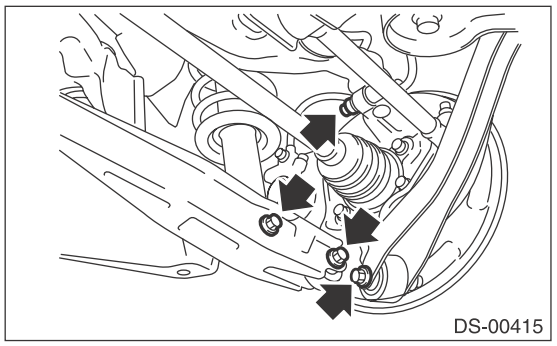

12) Remove the rear axle.

B: INSTALLATION

1) Temporarily tighten the rear housing to the upper arm.
2) Align the hole of rear brake back plate, and temporarily tighten the rear hub unit bearing to the rear housing.

CAUTION:
• Be careful not to damage the magnetic encoder.
• Do not get closer the tool which charged magnetism to magnetic encoder.

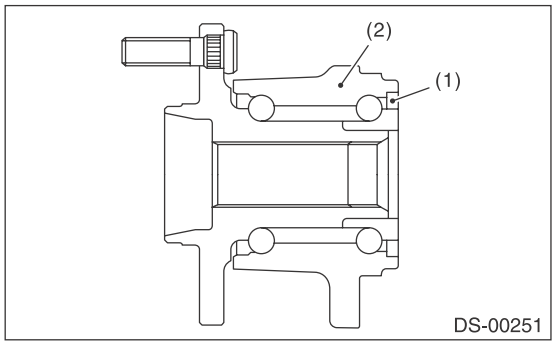

(1) Magnetic encoder
(2) Rear hub unit bearing

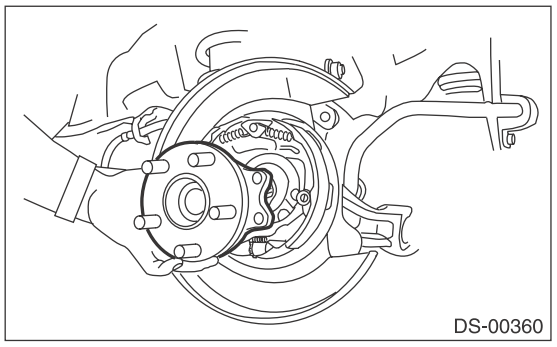

3) Install the rear drive shaft to the rear hub unit bearing.
4) Tighten the new axle nut temporarily.

CAUTION:
Use a new axle nut.

5) Attach the links to the rear housing and tighten them to the specified torque.

Tightening torque:
Upper arm
80 N·m (8.2 kgf-m, 59 ft-lb)
Front lateral link
60 N·m (6.1 kgf-m, 44.3 ft-lb)
Rear lateral link
80 N·m (8.2 kgf-m, 59 ft-lb)
Trailing link
80 N·m (8.2 kgf-m, 59 ft-lb)

6) Tighten the rear hub unit bearing.

Tightening torque:
65 N·m (6.6 kgf-m, 47.9 ft-lb)

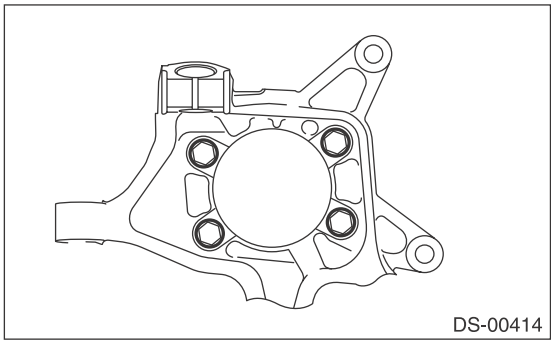
DS-00414

7) Install the rear disc rotor.
8) Install the rear disc brake.

Tightening torque:
66 N·m (6.7 kgf-m, 48.7 ft-lb)

9) Install the brake hose bracket and the rear ABS wheel speed sensor.

Tightening torque:
Frame hose bracket
33 N·m (3.4 kgf-m, 24.3 ft-lb)
Rear ABS wheel speed sensor
7.5 N·m (0.76 kgf-m, 5.5 ft-lb)

10) While pressing the brake pedal, tighten the new axle nuts to the specified torque.

Tightening torque:
240 N·m (24.5 kgf-m, 177 ft-lb)

CAUTION:
Do not load the rear axle before tightening the axle nut. Doing so may damage the hub bearing.

11) After tightening the axle nut, lock it securely.

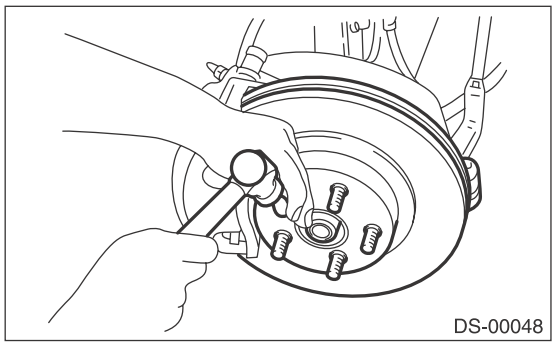
DS-00048

12) Install the rear wheels.

Tightening torque:
120 N·m (12.2 kgf-m, 88.5 ft-lb)

13) Inspect the wheel alignment and adjust if necessary.

C: DISASSEMBLY

Refer to “Rear Trailing Link ” of “REAR SUSPENSION” for removal procedures of bushing.
<Ref. to RS-10, REAR HOUSING BUSHING, DISASSEMBLY, Rear Trailing Link.>

D: ASSEMBLY

Refer to “Rear Trailing Link ” of “REAR SUSPENSION” for installation procedures of bushing.
<Ref. to RS-11, REAR HOUSING BUSHING, ASSEMBLY, Rear Trailing Link.>

E: INSPECTION

1) While moving the rear tire up and down by hand, check if there is no backlash in the bearing, and make sure the wheel rotates smoothly.

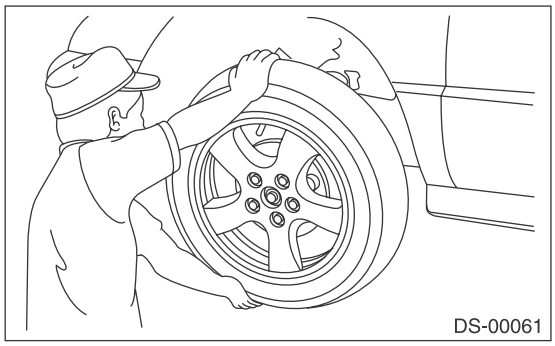
DS-00061

2) Inspect the lean of axis direction using a dial gauge. Replace the bearing if the load range exceeds the limitation.

Service limit:
Maximum: 0.05 mm (0.0020 in)

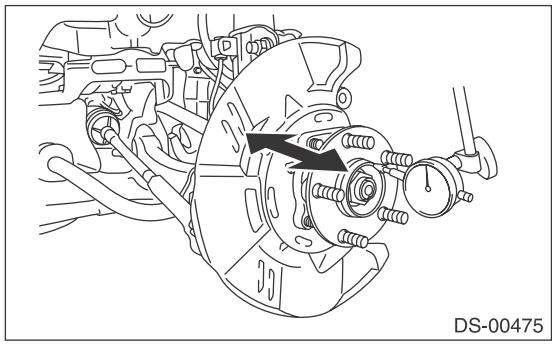

6. Rear Hub Unit Bearing

A: REMOVAL

1) Lift up the vehicle, and then remove the rear wheels.
2) Lift the crimped section of axle nut.

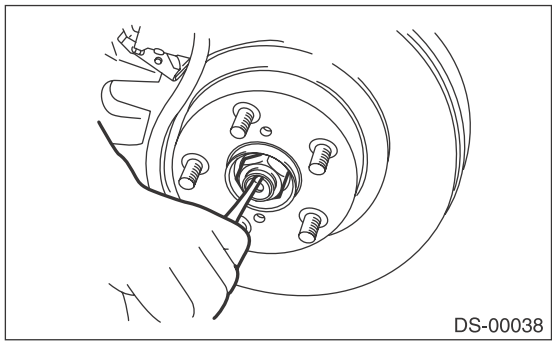

3) Remove the axle nut using a socket wrench while depressing the brake pedal.

CAUTION:
Do not loosen the axle nut while the rear axle is loaded. Doing so may damage the hub bearing.
4) Remove the disc brake caliper from the rear housing, and suspend it from the vehicle using ropes.

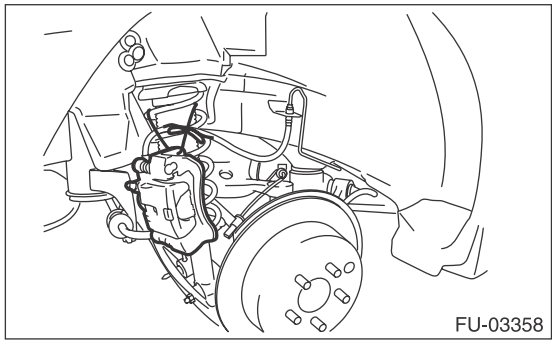

5) Remove the rear disc rotor.
6) Remove four bolts from the rear housing.

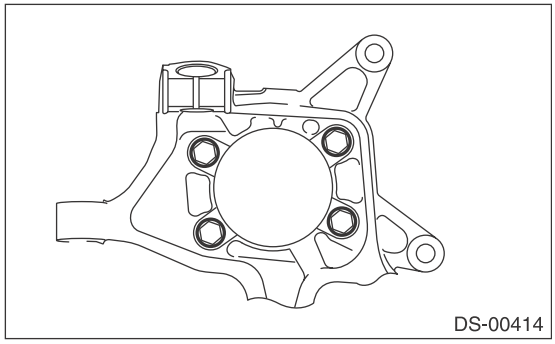

7) Remove the rear hub unit bearing.

CAUTION:
• Be careful not to damage the magnetic encoder.
• Do not get closer the tool which charged magnetism to magnetic encoder.

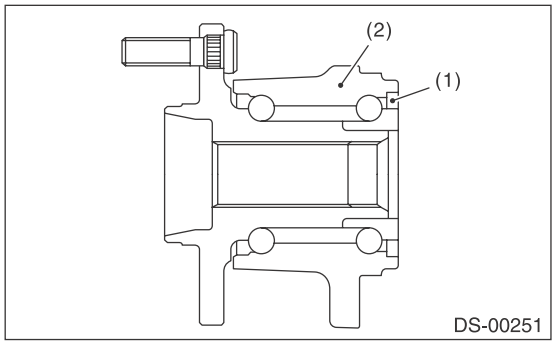

(1) Magnetic encoder
(2) Rear hub unit bearing

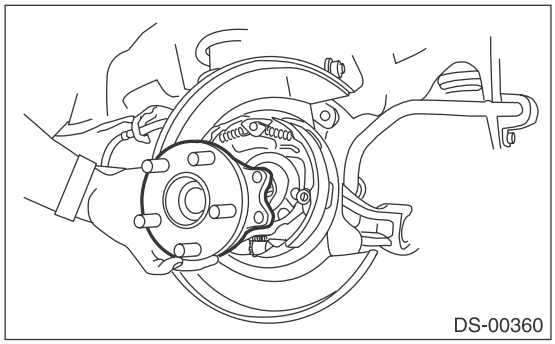

NOTE:
If it is hard to remove, use the ST.

ST1	926470000	AXLE SHAFT PULLER
ST2	28099PA110	AXLE SHAFT PULLER PLATE

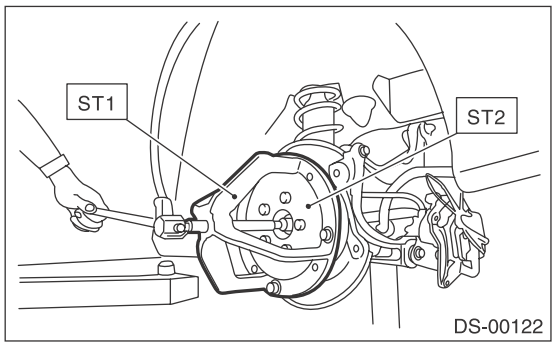

B: INSTALLATION

1) Align the hole of rear brake back plate, and temporarily tighten the rear hub unit bearing to the rear housing.

CAUTION:
• Be careful not to damage the magnetic encoder.
• Do not get closer the tool which charged magnetism to magnetic encoder.

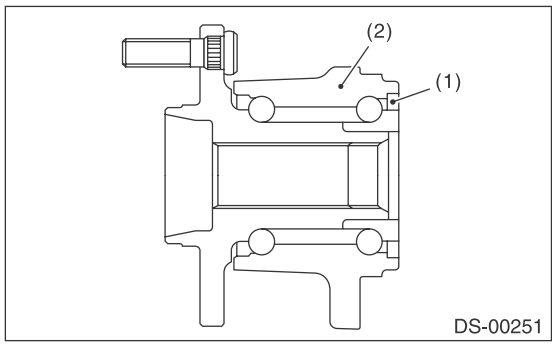

(1) Magnetic encoder
(2) Rear hub unit bearing

2) Tighten the rear hub unit bearing.

Tightening torque:
65 N·m (6.6 kgf-m, 47.9 ft-lb)

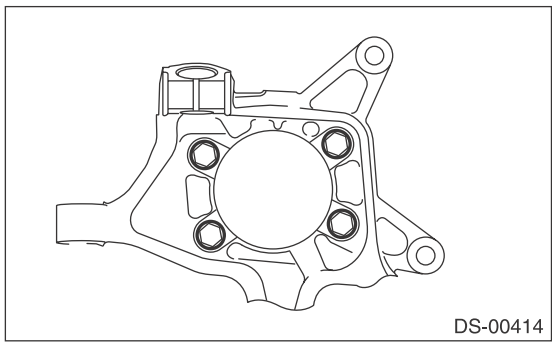

3) Tighten the new axle nut temporarily.

CAUTION:
Use a new axle nut.
4) Install the rear disc rotor.
5) Install the disc brake.

Tightening torque:
66 N·m (6.7 kgf-m, 48.7 ft-lb)
6) While pressing the brake pedal, tighten the new axle nuts to the specified torque.

Tightening torque:
240 N·m (24.5 kgf-m, 177 ft-lb)

CAUTION:
Do not load the rear axle before tightening the axle nut. Doing so may damage the hub bearing.

7) After tightening the axle nut, lock it securely.

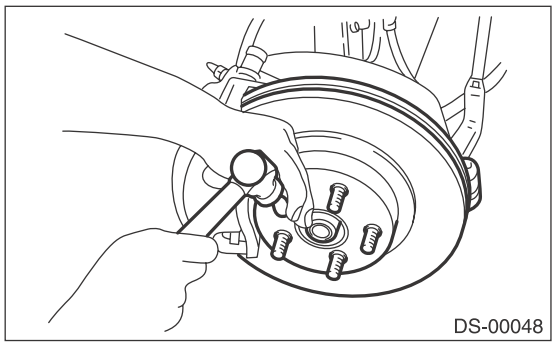

8) Install the rear wheels.

Tightening torque:
120 N·m (12.2 kgf-m, 88.5 ft-lb)

C: DISASSEMBLY

Using the ST and a hydraulic press, push out the hub bolts.
ST 28399AG000 HUB STAND

CAUTION:
• Be careful not to hammer the hub bolts. This may deform the hub.
• Do not reuse the hub bolt.

NOTE:
Since the hub unit bearing can not be disassembled, only hub bolts can be removed.

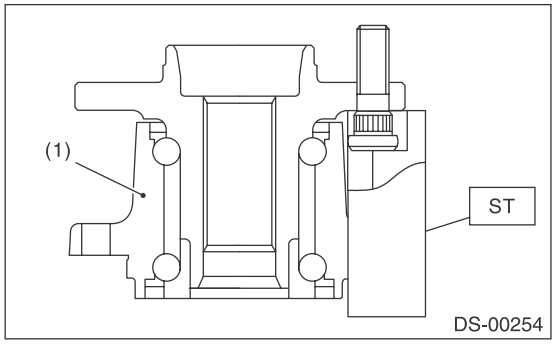

(1) Rear hub unit bearing

D: ASSEMBLY

1) Attach the hub to the ST securely.
ST 927080000 HUB STAND

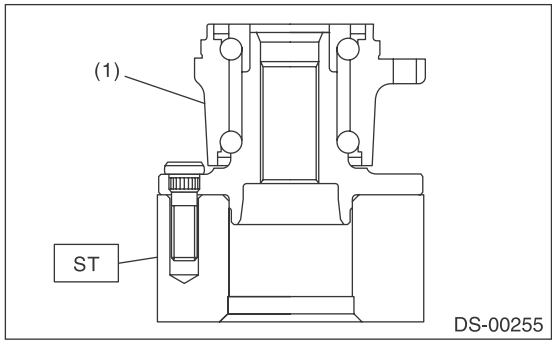

(1) Rear hub unit bearing

2) Using a press, press the new hub bolts until their seating surfaces contact the hub.

NOTE:
Use the 12 mm (0.47 in) dia. holes in the HUB STAND to prevent bolts from tilting.

E: INSPECTION

1) While moving the rear tire up and down by hand, check if there is no free play in the bearing, and make sure the wheel rotates smoothly.

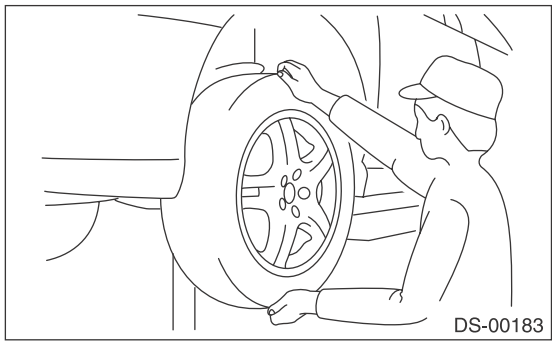

2) Inspect the play in axial direction using a dial gauge. Replace the hub bearing if the play exceeds the limit.

Service limit:
Maximum: 0.05 mm (0.0020 in)

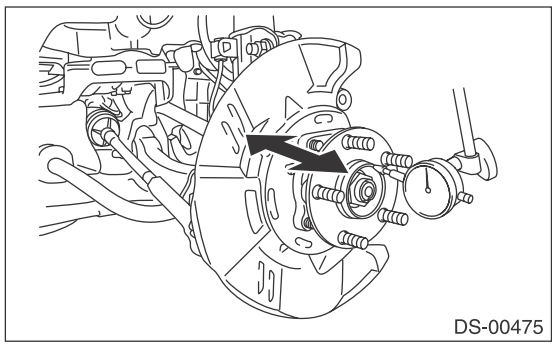

7. Front Drive Shaft

A: REMOVAL

1) Lift up the vehicle, and remove the front wheels.
2) Lift the crimped section of axle nut.

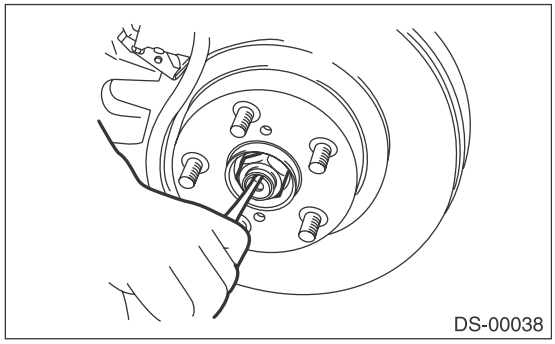

3) Remove the axle nut using a socket wrench while depressing the brake pedal.

CAUTION:
Do not loosen the axle nut while the front axle is loaded. Doing so may damage the hub bearing.
4) Drain the transmission gear oil. (MT model)
5) Drain differential gear oil. (AT and CVT models)
6) Remove the stabilizer link from front arm.
7) Disconnect the front arm ball joint from the housing.

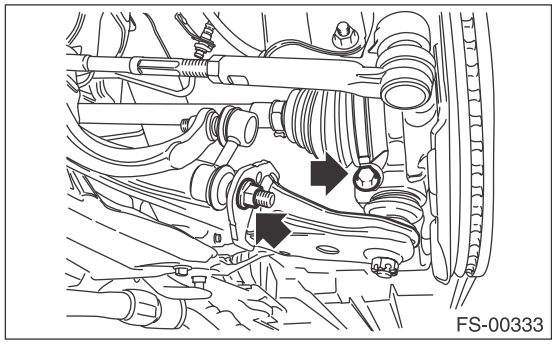

8) Remove the front drive shaft assembly. If it is hard to remove, use ST1 and ST2.

ST1	926470000	AXLE SHAFT PULLER
ST2	28099PA110	AXLE SHAFT PULLER PLATE

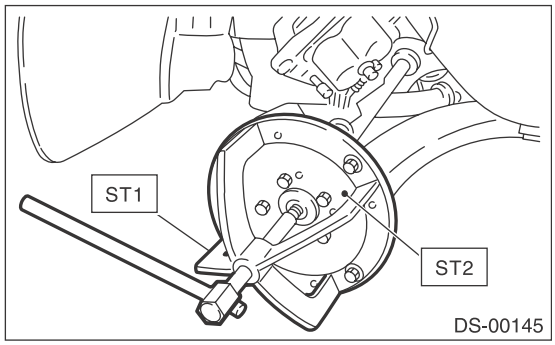

9) Using a bar, remove the front drive shaft from transmission.

CAUTION:
Be careful not to allow the bar to damage holder area.

B: INSTALLATION

1) Replace the differential side retainer oil seal with a new part.

NOTE:
After pulling out the drive shaft, be sure to replace with a new oil seal.

6MT MODEL <Ref. to 6MT-35, REPLACEMENT, Differential Side Retainer Oil Seal.>

5AT model <Ref. to 5AT-49, REPLACEMENT, Differential Side Retainer Oil Seal.>

CVT model <Ref. to CVT-90, REPLACEMENT, Differential Side Retainer Oil Seal.>
2) Insert the drive shaft into the hub spline, and pull in the drive shaft into specified position.

CAUTION:
Do not hammer drive shaft when installing it.
3) Tighten the axle nut temporarily.
4) Using the ST, install the front drive shaft to transmission.
ST 28399SA010 OIL SEAL PROTECTOR

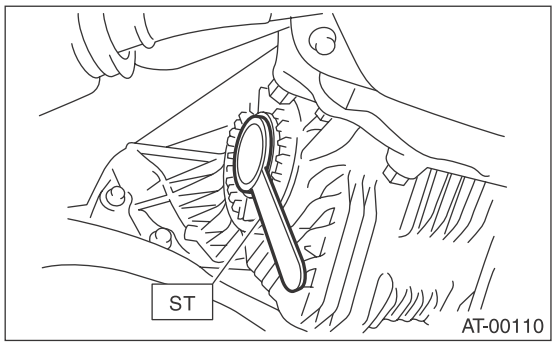

5) Connect the front arm ball joint to the housing.

CAUTION:
Before tightening, make sure the lower side of housing and stepped section of ball joint are in contact.

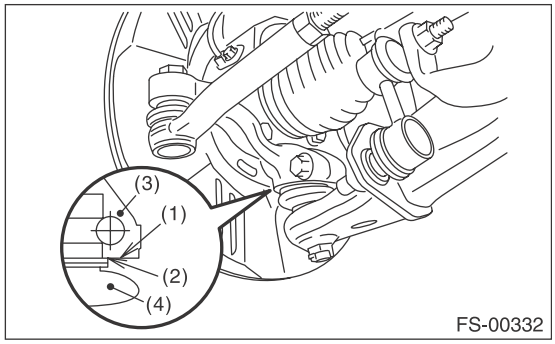

(1) Housing bottom
(2) Raised section of ball joint
(3) Housing
(4) Ball joint

Tightening torque:
50 N·m (5.1 kgf-m, 36.9 ft-lb)

6) Install the stabilizer link.

CAUTION:
Use a new flange nut.

Tightening torque:
60 N·m (6.1 kgf-m, 44.3 ft-lb)

7) While pressing the brake pedal, tighten the new axle nuts to the specified torque.

Tightening torque:
220 N·m (22.4 kgf-m, 162.3 ft-lb)

CAUTION:
Do not load the front axle before tightening the axle nut. Doing so may damage the hub bearing.

8) After tightening axle nut, lock it securely.
9) Fill transmission gear oil. (MT model)
10) Fill differential gear oil. (AT and CVT models)
11) Install the front wheels.

Tightening torque:
120 N·m (12.2 kgf-m, 88.5 ft-lb)

12) Inspect the wheel alignment and adjust if necessary.

C: DISASSEMBLY

1) Place alignment marks on the shaft and outer race.

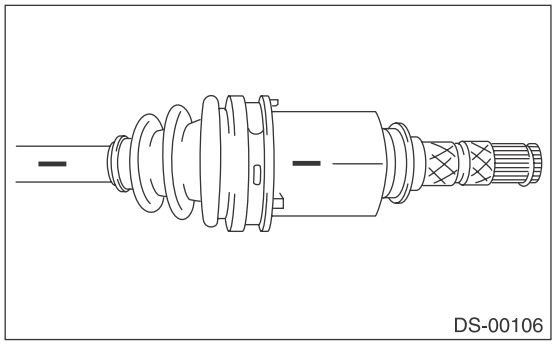

2) Remove the AAR boot band and boot.

CAUTION:
Be careful not to damage the boot.

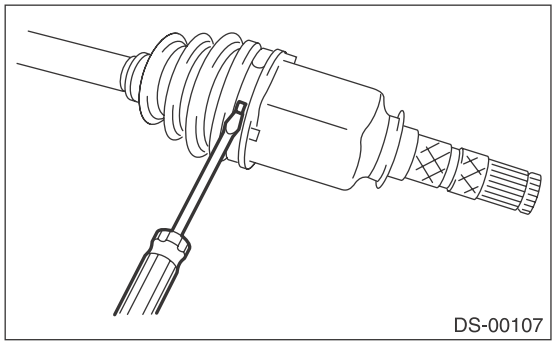

3) Place the drive shaft between wooden blocks etc, and secure it with a vise.

CAUTION:
Do not clamp the drive shaft directly with vise.

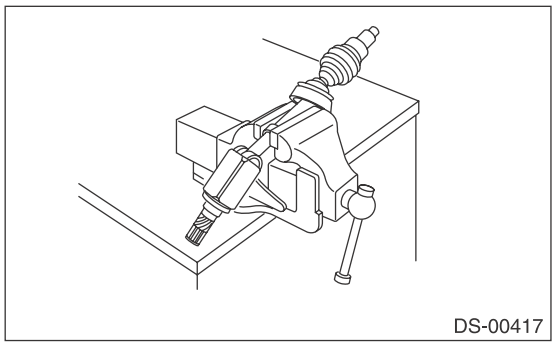

4) Tap the staked part of outer race one after the other using the plastic or wooden bar to remove the roller one by one.

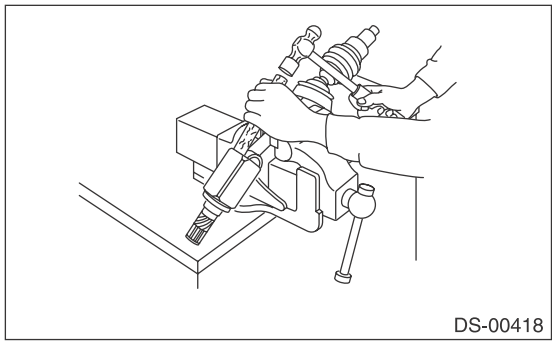
DS-00418

CAUTION:
- **Tap the staked part (A) of outer race.**
- **Do not use the metal rod because it may deform the outer race.**
- **Be careful not to damage the roller parts.**

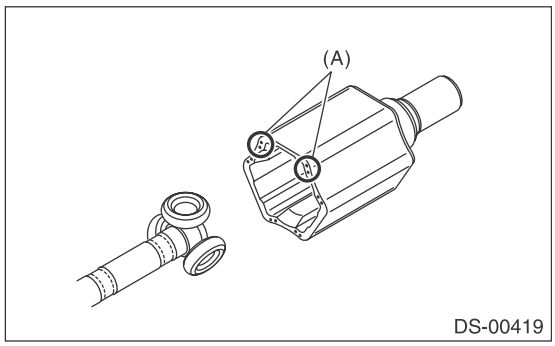

DS-00419

5) Take out the outer race from the shaft assembly.

CAUTION:
To prevent the outer race from dropping, have the work assistant to support the outer race when removing the 3rd roller.

6) Wipe off grease.

CAUTION:
The grease is a special type of grease. Do not mix with other grease.

7) Place alignment marks on the roller kit and trunnion.

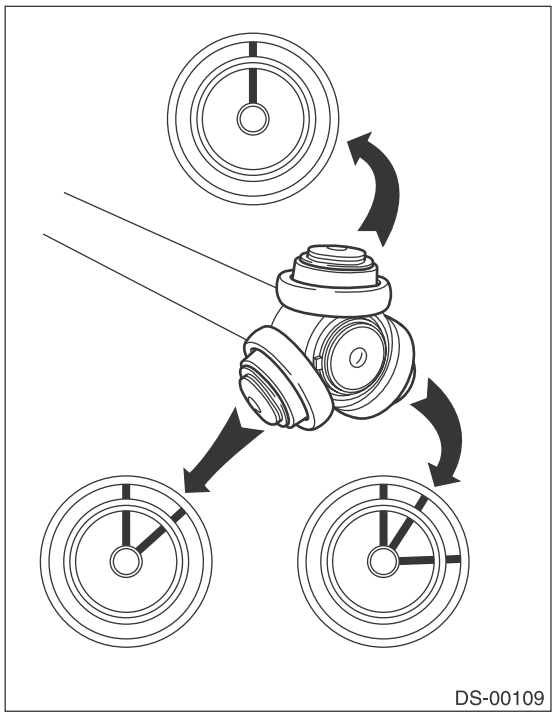
DS-00109

8) Remove the roller kit from trunnion.

CAUTION:
Be careful with the roller kit position.

9) Place alignment marks on the trunnion and shaft.

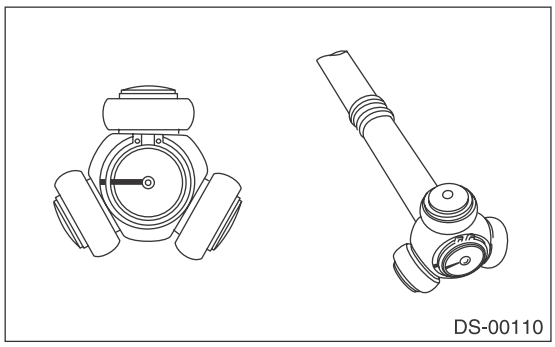
DS-00110

10) Remove the snap ring and trunnion.

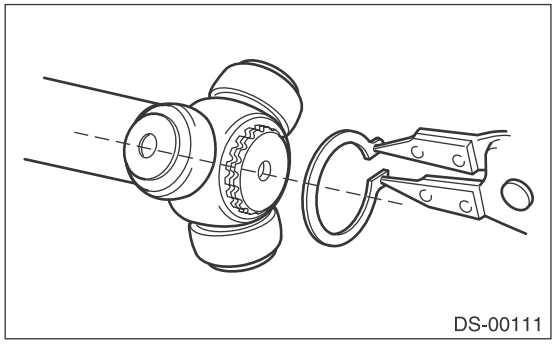
DS-00111

CAUTION:
Be sure to wrap shaft splines with vinyl tape to protect the boot from scratches.

11) Remove the AAR boot.

NOTE:
Further disassembly of the drive shaft is impossible because the AC cannot be disassembled.

D: ASSEMBLY

NOTE:
Use specified grease.

AAR side:
ONE LUBER (C)
1) Pass the AAR boot through the shaft.
2) Match alignment marks and install the trunnion onto the shaft, and securely install the snap ring to the shaft groove.

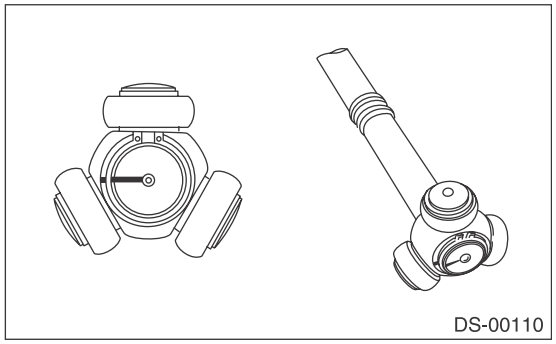

3) Fill 50 to 60 g (1.76 to 2.12 oz) of specified grease into the inner side of the AAR outer race.
4) Apply a thin coat of specified grease to the roller and trunnion.
5) Place the drive shaft between wooden blocks etc, and secure it with a vise.

CAUTION:
Do not clamp the drive shaft directly with vise.
6) Match alignment marks of the shaft and outer race.
7) Tap the upper part of roller insertion on the outer race one after the other, using the plastic or wooden bar, to insert the roller one by one.

CAUTION:
- **Do not use the metal rod because it may deform the outer race.**
- **Do not tap the outer race tip (shaft part).**
- **Be careful not to deform the baffle plate.**

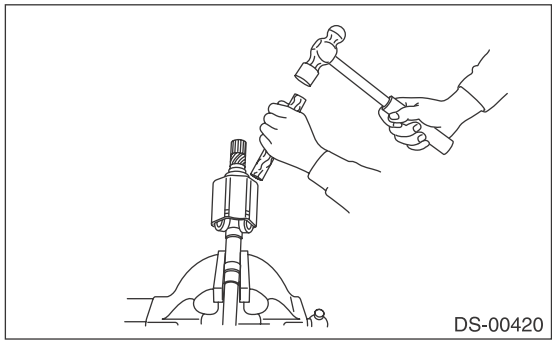

8) Apply an even coat of the specified grease 30 to 40 g (1.06 to 1.41 oz) to the entire inner surface of boot.
9) Install the AAR boot and grommet taking care not to twist them.

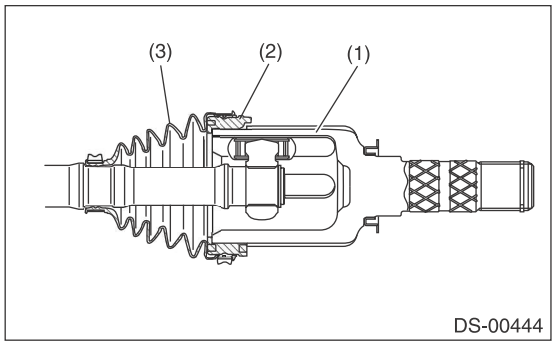

(1) Outer race
(2) Grommet
(3) Boot

CAUTION:
- **Replace the boot and grommet as a set.**
- **Make sure the groove on the outer race side is free from grease.**

10) Insert a flat tip screwdriver between the outer race and grommet so that the air pressure inside the boot is equal to the atmospheric pressure.
11) Install new large boot band and small boot band to the specified locations.
12) Tighten the boot band using ST, torque wrench and socket flex handle.
ST 28099AC000 BOOT BAND PLIER

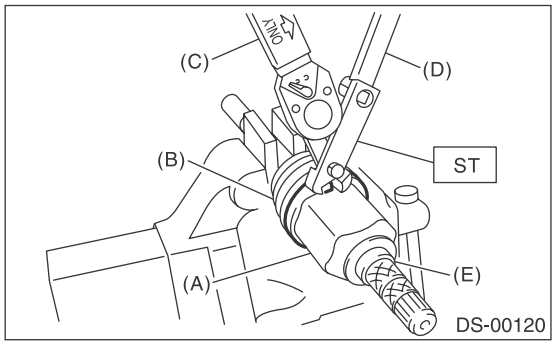

(A) Large boot band
(B) Boot
(C) TORQUE WRENCH
(D) Socket flex handle
(E) Outer race

Clearance on the crimped section of boot band:
Large boot band
1 mm (0.04 in) or less
Small boot band
1 mm (0.04 in) or less

13) Extend and retract the AAR repeatedly to provide an equal coating of grease.

E: INSPECTION

Check the removed parts for damage, wear, corrosion etc. If faulty, correct or replace.

- AAR and AC

Check for seizure, corrosion, damage, wear and excessive play.

- Shaft

Check for excessive bending, twisting, damage and wear.

- Boot

Check for wear, warping, breakage and scratches.

- Grease

Check for discoloration and fluidity.

8. Rear Drive Shaft

A: REMOVAL

1) Lift up the vehicle, and then remove the rear wheels.
2) Lift the crimped section of axle nut.

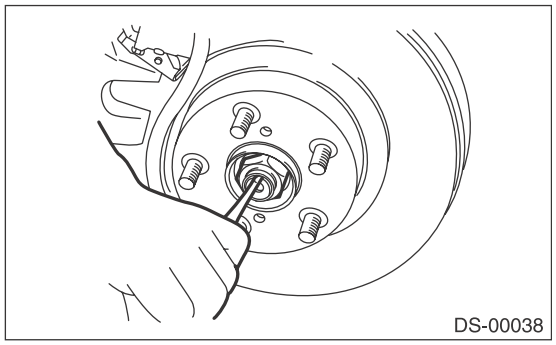

3) Remove the axle nut using a socket wrench while depressing the brake pedal.

CAUTION:
Do not loosen the axle nut while the rear axle is loaded. Doing so may damage the hub bearing.
4) Drain differential gear oil.
5) Remove the rear trailing link. <Ref. to RS-10, REMOVAL, Rear Trailing Link.>
6) Remove the rear lateral link. <Ref. to RS-16, REMOVAL, Rear Lateral Link.>
7) Remove the rear drive shaft from the rear differential using ST. (T-type)
ST 28099PA100 DRIVE SHAFT REMOVER

NOTE:
Attach the ST to the bolt as shown in the figure so as not to damage the side bearing retainer.

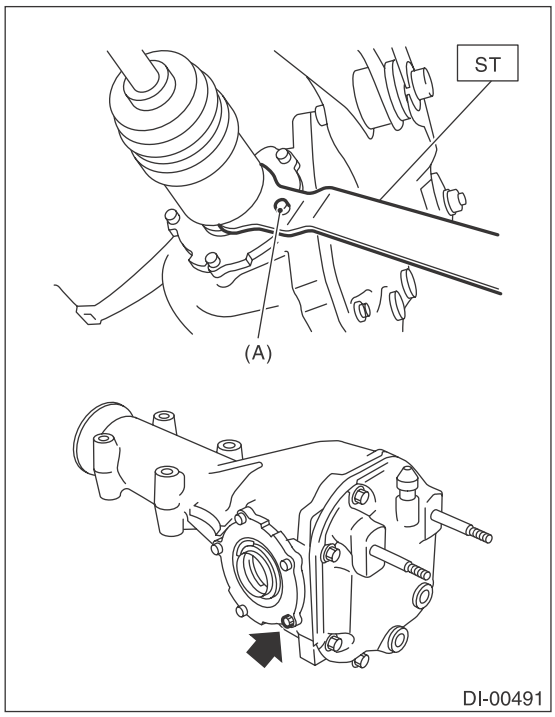

(A) BOLT

8) Remove the rear drive shaft from the rear differential. (VA-type)

NOTE:
Attach the tire lever to the bolt as shown in the figure so as not to damage the side bearing retainer.

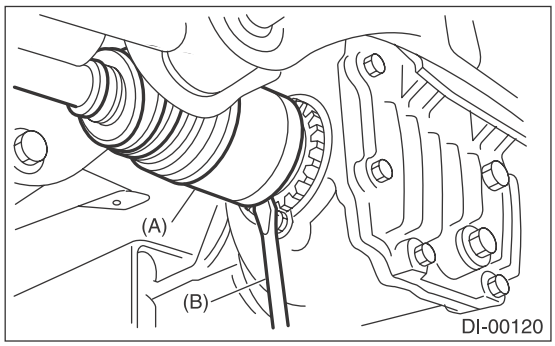

(A) Drive shaft
(B) Tire lever

9) Remove the rear drive shaft from the rear axle. If it is hard to remove, use ST1 and ST2.
ST1 926470000 AXLE SHAFT PULLER
ST2 28099PA110 AXLE SHAFT PULLER PLATE

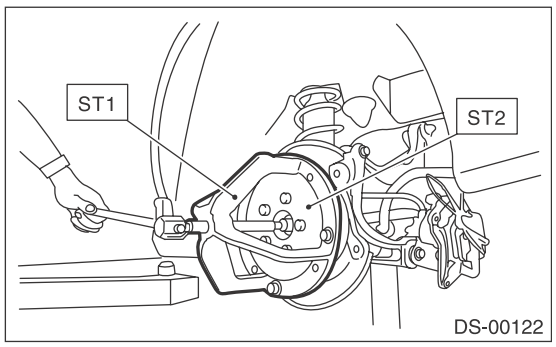

B: INSTALLATION

1) Replace the rear differential side oil seal. <Ref. to DI-74, REPLACEMENT, Rear Differential Side Oil Seal.>

NOTE:
After pulling out the drive shaft, be sure to replace with a new oil seal.
2) Insert the drive shaft into the rear hub spline, and pull the drive shaft into specified position.

CAUTION:
• Be careful not to damage the magnetic encoder.
• Do not get closer the tool which charged magnetism to magnetic encoder.
• Do not hammer drive shaft when installing it.

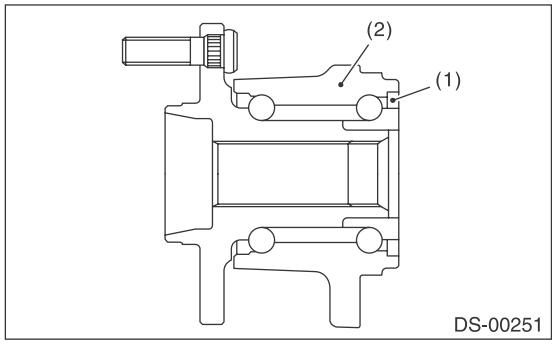

(1) Magnetic encoder
(2) Rear hub unit bearing

3) Tighten the axle nut temporarily.

4) Using the ST, install the rear drive shaft to the rear differential.
ST 28099PA090 OIL SEAL PROTECTOR

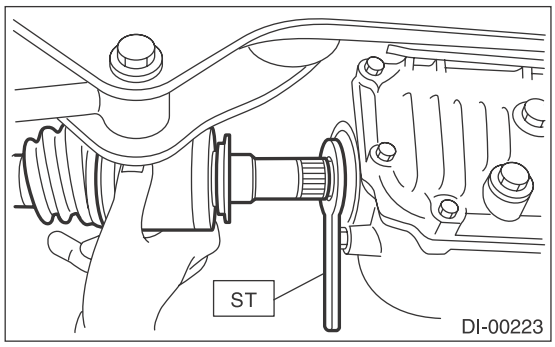

5) Attach the links to the rear housing and tighten them to the specified torque.

Tightening torque:
Stabilizer link
33 N·m (3.4 kgf-m, 24.3 ft-lb)
Shock absorber
120 N·m (12.2 kgf-m, 88.5 ft-lb)
Rear lateral link
80 N·m (8.2 kgf-m, 59 ft-lb)
Trailing link to Rear sub frame
120 N·m (12.2 kgf-m, 88.5 ft-lb)
Trailing link to Rear housing
80 N·m (8.2 kgf-m, 59 ft-lb)

6) While pressing the brake pedal, tighten the new axle nuts to the specified torque.

Tightening torque:
240 N·m (24.5 kgf-m, 177 ft-lb)

CAUTION:
Do not load the rear axle before tightening the axle nut. Doing so may damage the hub bearing.

7) Lock the axle nut securely.

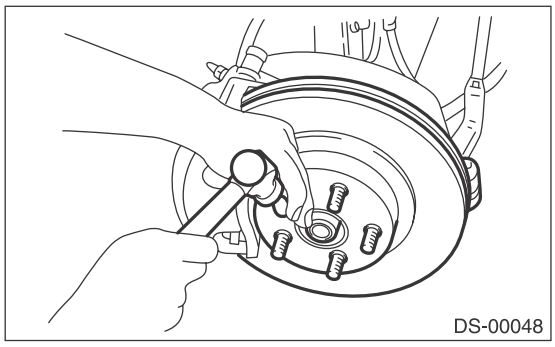

8) Fill differential gear oil.
9) Install the rear wheels.

Tightening torque:
120 N·m (12.2 kgf-m, 88.5 ft-lb)

10) Inspect the wheel alignment and adjust if necessary.

C: DISASSEMBLY

1) Loosen the boot band at the large end of DOJ boot using the flat tip screwdriver or pliers.

CAUTION:
Be careful not to damage the boot.

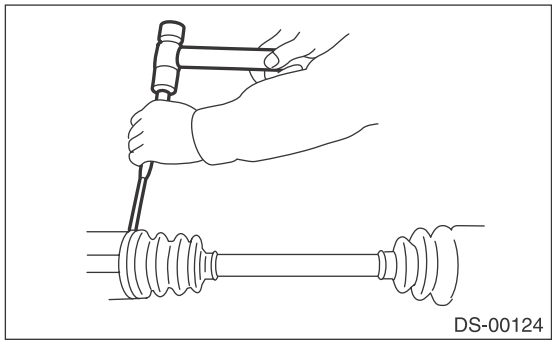

2) Remove the boot band on the small end of DOJ boot in the same manner.
3) Remove the large end of DOJ boot from DOJ outer race.
4) Remove the round snap ring at the neck of DOJ outer race with a screwdriver.

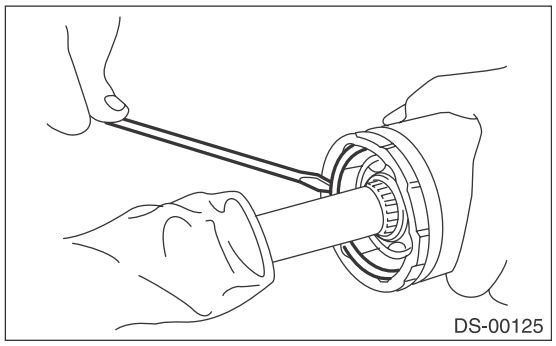

5) Take out the DOJ outer race from the shaft assembly.
6) Wipe off the grease and take out the ball bearings.

CAUTION:
The grease is a special grease (grease for constant velocity joints). Do not mix with other greases.

NOTE:
Disassemble while taking care not to lose balls.

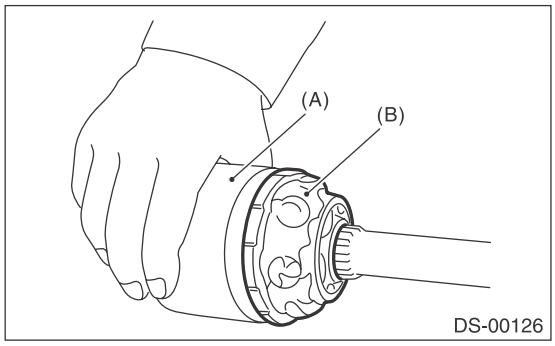

(A) Outer race
(B) Grease

7) To remove the cage from inner race, turn the cage by a half pitch to the track groove of inner race and shift the cage.
8) Using pliers, remove the snap ring fixing the inner race to the shaft.
9) Take out the DOJ inner race.
10) Take off the DOJ cage from shaft and remove the DOJ boot.

CAUTION:
Wrap shaft splines with vinyl tape to protect the boot from scratches.
11) Remove the BJ boot or EBJ boot in the same procedure as the DOJ boot.

NOTE:
Further disassembly of the drive shaft is impossible because the BJ and EBJ cannot be disassembled.

D: ASSEMBLY

CAUTION:
Wrap shaft splines with vinyl tape to protect the boot from scratches.

NOTE:
Use specified grease.

BJ, EBJ side:
NKG106

DOJ side:
NKG205
1) Install the BJ or EBJ boot in specified position, and fill it with 50 to 60 g (1.76 to 2.12 oz.) of specified grease.
2) Place the DOJ boot at the center of shaft.
3) Insert the DOJ cage onto shaft.

NOTE:
Insert the cage with the cutout portion facing the shaft end, since the cage has an orientation.

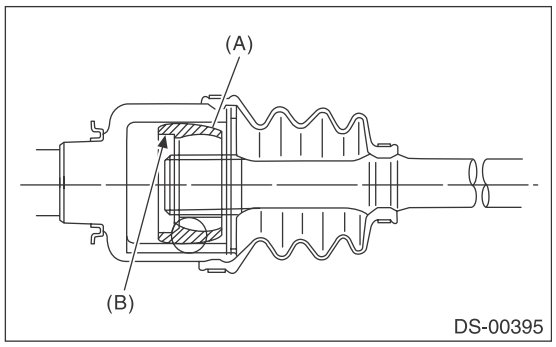

(A) Cage
(B) Cutout portion

4) Install the DOJ inner race on shaft and fix the snap ring in place with pliers.

NOTE:
Confirm that the snap ring is completely fitted in the shaft groove.

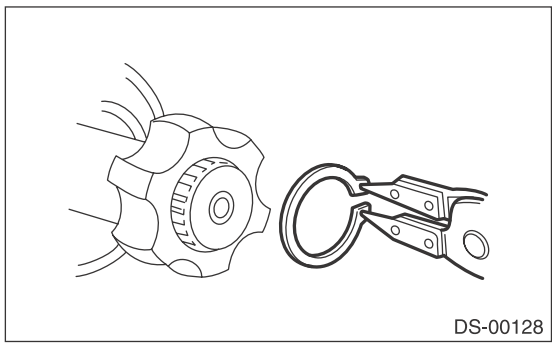

5) Install the cage to inner race fixed upon shaft.

NOTE:
Fit the cage with the protruding section aligned with the track on the inner race, and turn by a half pitch.

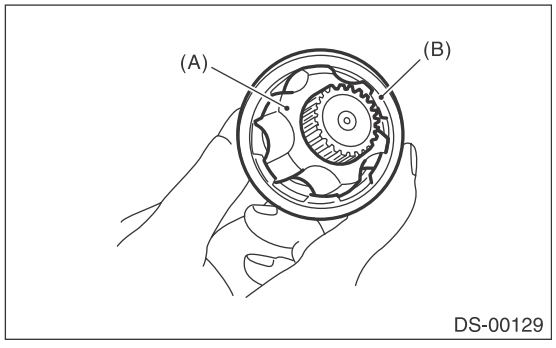

(A) Inner race
(B) Cage

6) Fill 80 to 90 g (2.82 to 3.17 oz) of specified grease into the inner side of the DOJ outer race.
7) Apply a thin coat of specified grease to the cage pocket and balls.
8) Insert balls into the cage pocket.
9) Align the outer race track and ball positions, and place the shaft, inner race, cage and ball bearings in the original positions, and then fix outer race in place.

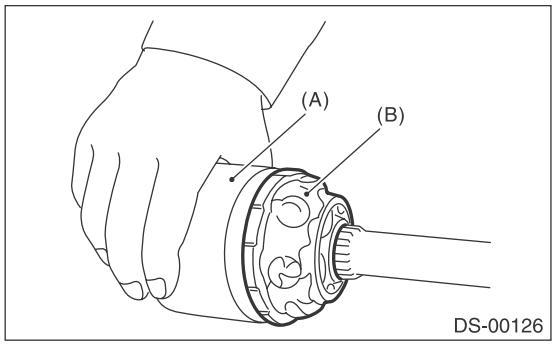

(A) Outer race
(B) Grease

10) Install the snap ring in the groove on the DOJ outer race.

NOTE:
• Assure that the balls, cage and inner race are completely fitted in the outer race of DOJ.
• Use care not to place the matched position of snap ring in the ball groove of outer race.
• Pull the shaft lightly and assure that the circlip is completely fitted in the groove.

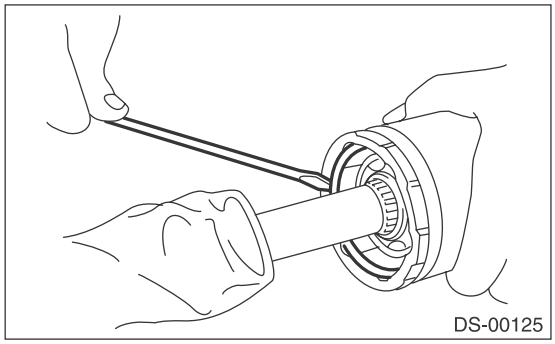

11) Apply an even coat of the specified grease [20 to 30 g (0.71 to 1.06 oz)] to the entire inner surface of boot. Also apply grease to the shaft.
12) Install the DOJ boot taking care not to twist it.

NOTE:
• The inside of the large end of DOJ boot and the boot groove shall be cleaned so as to be free from grease and other substances.
• When installing the DOJ boot, position the outer race of DOJ at center of the stroke.
13) Put a new band through the clip and wind twice in the band groove of the boot.
14) Pinch the end of band with pliers. Hold the clip and tighten securely.

NOTE:
When tightening boot, use care so that the air within the boot is appropriate.
15) Tighten the band using the ST.
ST 925091000 BAND TIGHTENING TOOL

NOTE:
Tighten the band until it cannot be moved by hand.

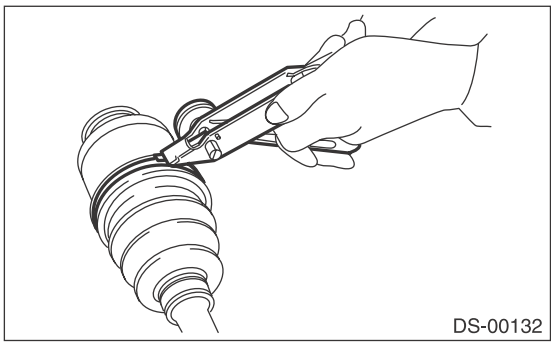

16) Tap the clip with the punch provided at the end of the ST.
ST 925091000 BAND TIGHTENING TOOL

NOTE:
Tap to an extent that the boot underneath is not damaged.

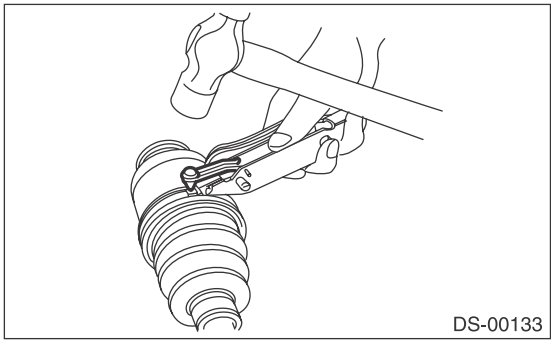

17) Cut off the band with an allowance of about 10 mm (0.39 in) left from the clip and bend this allowance over the clip.

NOTE:
Be careful so that the end of the band is in close contact with clip.
18) Install the BJ boot or EBJ boot in the same procedure as a DOJ boot.
19) Extend and retract the DOJ repeatedly to provide an equal coating of grease.

E: INSPECTION

Check the removed parts for damage, wear, corrosion etc. Repair or replace if defective.
- DOJ (Double Offset Joint)

Check for seizure, corrosion, damage, wear and excessive play.
- EBJ (High-efficiency Compact Ball Fixed Joint)

Check for seizure, corrosion, damage, wear and excessive play.
- Shaft

Check for excessive bending, twisting, damage and wear.
- BJ (Bell Joint)

Check for seizure, corrosion, damage and excessive play.
- Boot

Check for wear, warping, breakage and scratches.
- Grease

Check for discoloration and fluidity.

9. General Diagnostic Table

A: INSPECTION

NOTE:
Vibration while cruising may be caused by an unbalanced tire, improper tire inflation pressure, improper wheel alignment, etc.

Symptoms	Possible cause	Corrective action
Noise or vibration from propeller shaft	Center bearing	Check the center bearing. <Ref. to DS-11, CENTER BEARING FREE PLAY, INSPECTION, Propeller Shaft.>
	Runout of propeller shaft	Check for deflection of the propeller shaft. <Ref. to DS-11, RUNOUT OF PROPELLER SHAFT, INSPECTION, Propeller Shaft.>
	Loose or gap at connections	Check the joints and connectors. <Ref. to DS-11, JOINTS AND CONNECTIONS, INSPECTION, Propeller Shaft.>
		Check the spline and bearing. <Ref. to DS-11, SPLINES AND BEARING, INSPECTION, Propeller Shaft.>
Abnormal wheel vibration	Wheel is out of balance.	Check the wheel balancing. <Ref. to WT-4, WHEEL BALANCING, INSPECTION, Tire and Wheel.>
	Front wheel alignment	Check the front wheels alignment. <Ref. to FS-8, INSPECTION, Wheel Alignment.>
	Rear wheel alignment	Check the rear wheels alignment. <Ref. to RS-8, INSPECTION, Wheel Alignment.>
	Front strut	Check the front struts. <Ref. to FS-27, INSPECTION, Front Strut.>
	Rear shock absorber	Check the rear shock absorber. <Ref. to RS-14, INSPECTION, Rear Shock Absorber.>
	Front drive shaft	Check the front drive shaft. <Ref. to DS-29, INSPECTION, Front Drive Shaft.>
	Rear drive shaft	Check the rear drive shaft. <Ref. to DS-34, INSPECTION, Rear Drive Shaft.>
	Front hub unit bearing	Check the front hub unit bearings. <Ref. to DS-17, INSPECTION, Front Hub Unit Bearing.>
	Rear hub unit bearing	Check the rear hub unit bearings. <Ref. to DS-24, INSPECTION, Rear Hub Unit Bearing.>
Noise from the underbody	Wheel is out of balance.	Check the wheel balancing. <Ref. to WT-4, WHEEL BALANCING, INSPECTION, Tire and Wheel.>
	Front wheel alignment	Check the front wheels alignment. <Ref. to FS-8, INSPECTION, Wheel Alignment.>
	Rear wheel alignment	Check the rear wheels alignment. <Ref. to RS-8, INSPECTION, Wheel Alignment.>
	Front strut	Check the front struts. <Ref. to FS-27, INSPECTION, Front Strut.>
	Rear shock absorber	Check the rear shock absorber. <Ref. to RS-14, INSPECTION, Rear Shock Absorber.>

VEHICLE DYNAMICS CONTROL (VDC)

VDC

		Page
1.	General Description	2
2.	VDC Control Module and Hydraulic Control Unit (VDCCM&H/U)	7
3.	ABS Sequence Control	12
4.	VDC Sequence Control	15
5.	Yaw Rate and G Sensor	18
6.	Steering Angle Sensor	19
7.	Front ABS Wheel Speed Sensor	20
8.	Rear ABS Wheel Speed Sensor	22
9.	Front Magnetic Encoder	23
10.	Rear Magnetic Encoder	24
11.	VDC OFF Switch	25

1. General Description

A: SPECIFICATION

Item				Specification or identification
ABS wheel speed sensor	ABS wheel speed sensor gap (for reference)	Front		0.77 — 1.43 mm (0.030 — 0.056 in)
		Rear		0.64 — 1.56 mm (0.025 — 0.061 in)
	Identifications of harness (marks, color)	Front	(Except for OBK model)	S1 (Pink)
			OBK model	S2 (Blue)
		Rear	RH (Except for OBK model)	S3 (Yellow)
			LH (Except for OBK model)	S4 (White)
			RH (OBK model)	S5 (Red)
			RH (OBK model)	S6 (Light green)
VDCCM&H/U Identification				V1

B: COMPONENT

1. ABS WHEEL SPEED SENSOR

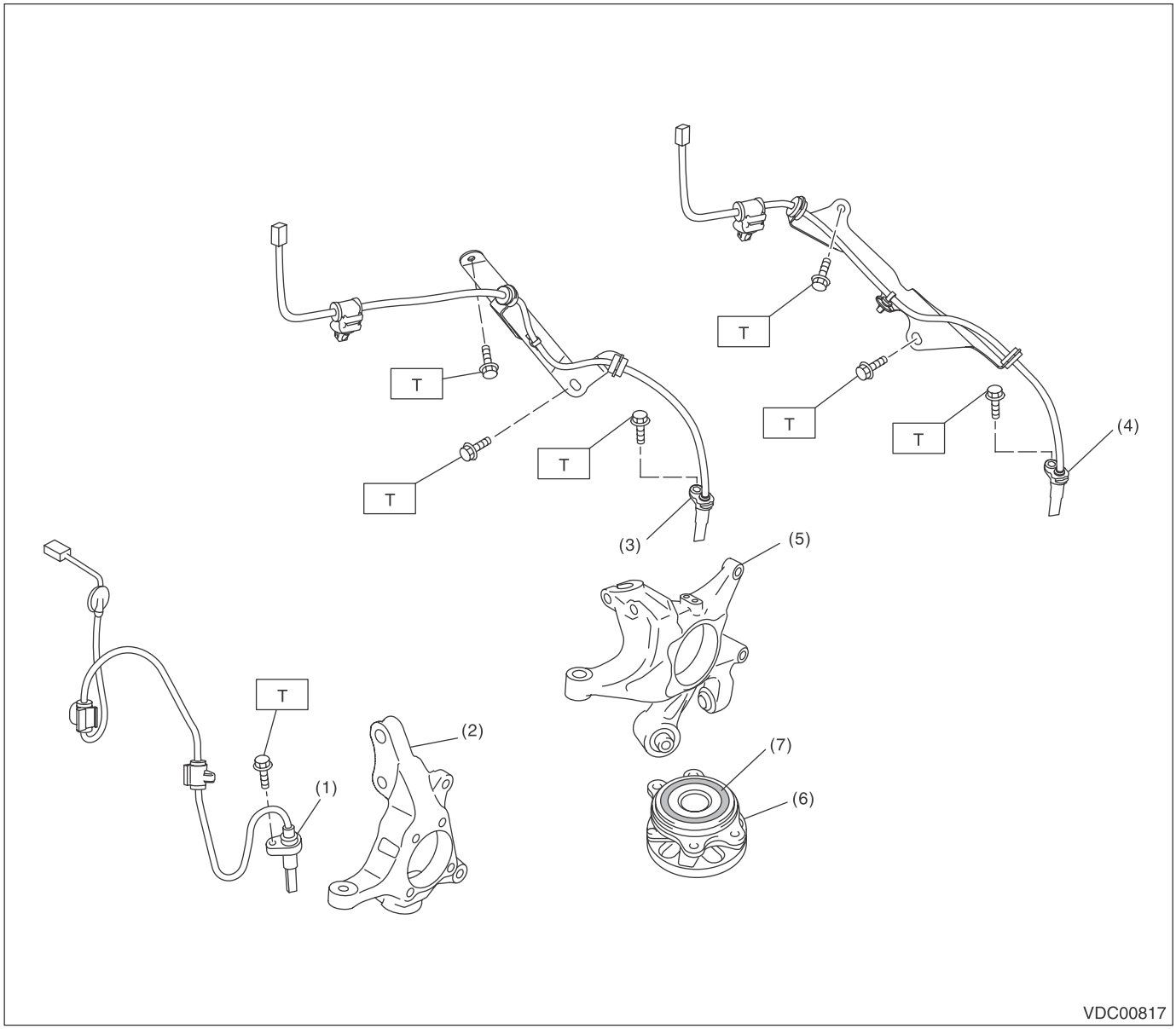

(1) Front ABS wheel speed sensor
(2) Front housing
(3) Rear ABS wheel speed sensor (except for OBK model)
(4) Rear ABS wheel speed sensor (OBK model)
(5) Rear housing
(6) Hub unit bearing
(7) Magnetic encoder

Tightening torque:N·m (kgf-m, ft-lb)
T: 7.5 (0.76, 5.5)

2. STEERING ANGLE SENSOR

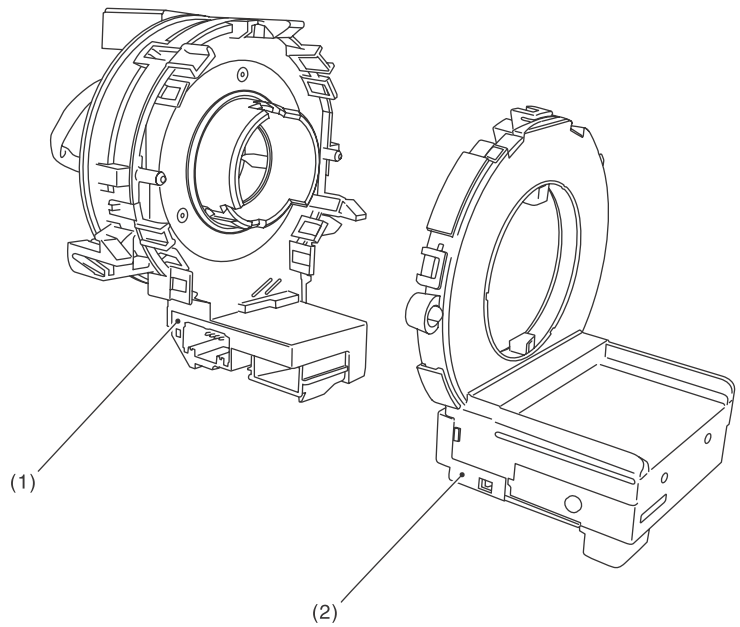

(1) Steering roll connector
(2) Steering angle sensor

3. VDC CONTROL MODULE & HYDRAULIC CONTROL UNIT (VDCCM&H/U)

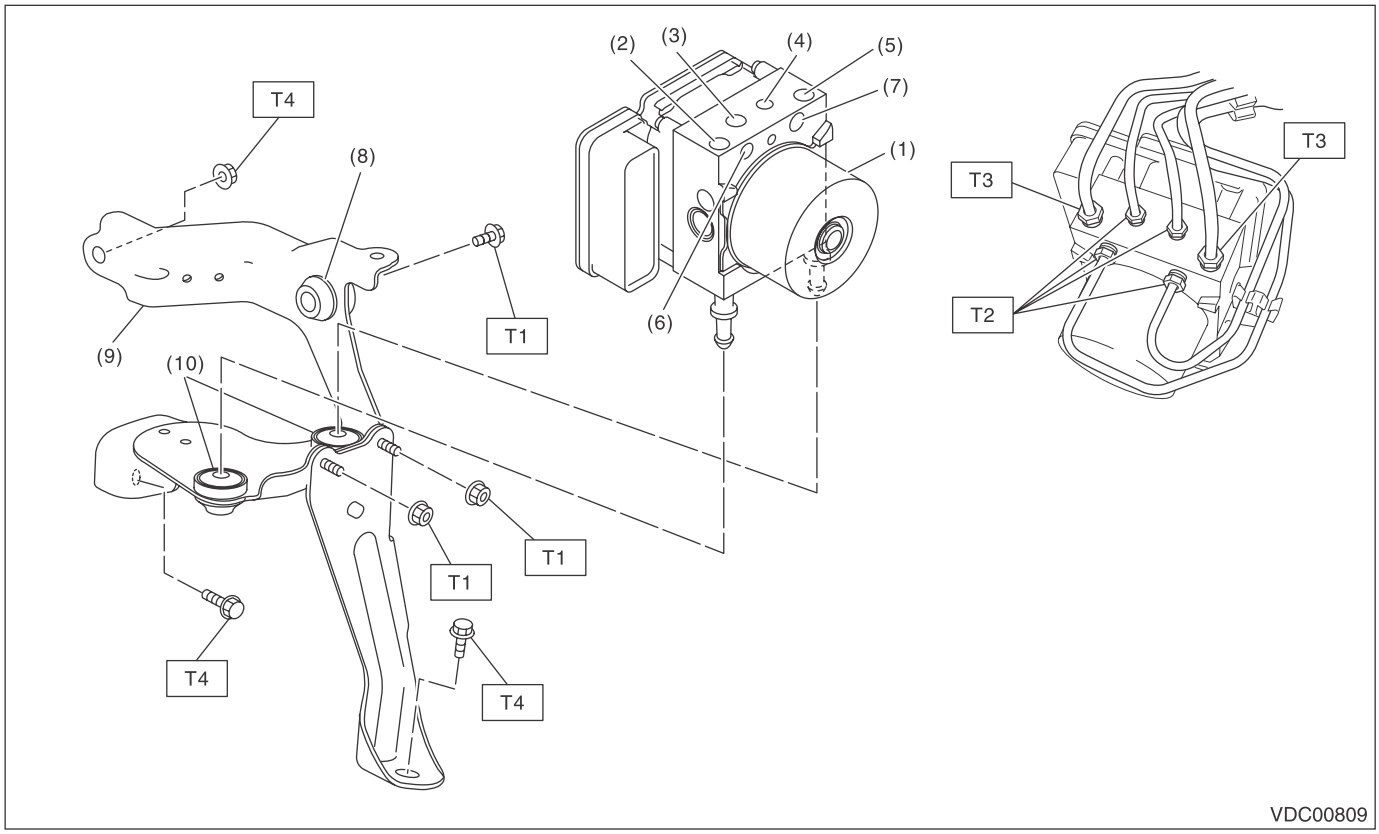

(1)	VDC control module and hydraulic control unit (VDCCM&H/U)	(6)	Rear RH outlet	***Tightening torque:N·m (kgf-m, ft-lb)***
(2)	Secondary inlet	(7)	Rear LH outlet	***T1: 7.5 (0.76, 5.5)***
(3)	Front LH outlet	(8)	Damper & spacer	***T2: 15 (1.5, 11.1)***
(4)	Front RH outlet	(9)	Bracket	***T3: 19 (1.9, 14)***
(5)	Primary inlet	(10)	Damper	***T4: 33 (3.4, 24.3)***

C: CAUTION

- Wear appropriate work clothing, including a cap, protective goggles and protective shoes when performing any work.
- Remove contamination including dirt and corrosion before removal, installation or disassembly.
- Keep the disassembled parts in order and protect them from dust and dirt.
- Before disconnecting connectors of sensors or units, be sure to disconnect the ground cable from the battery.
- Before removal, installation or disassembly, be sure to clarify the failure. Avoid unnecessary removal, installation, disassembly and replacement.
- Vehicle components are extremely hot after driving. Be wary of receiving burns from heated parts.
- Be sure to tighten fasteners including bolts and nuts to the specified torque.
- Place shop jacks or rigid racks at the specified points.

D: PREPARATION TOOL

1. SPECIAL TOOL

ILLUSTRATION	TOOL NUMBER	DESCRIPTION	REMARKS
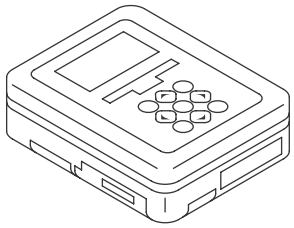 ST1B022XU0	1B022XU0	SUBARU SELECT MONITOR III KIT	Used for setting of each function and troubleshooting for electrical system.

2. GENERAL TOOL

TOOL NAME	REMARKS
Circuit tester	Used for measuring resistance, voltage and current.
Pressure gauge	Used for measuring oil pressure.
Oscilloscope	Used for measuring the sensor.

2. VDC Control Module and Hydraulic Control Unit (VDCCM&H/U)

A: REMOVAL

1) Disconnect the ground cable from battery.
2) Remove any dirt from around the VDCCM&H/U.
3) Release the lock (1), pull down the lock lever (2) and disconnect the VDCCM&H/U connector.

CAUTION:
Do not pull on the harness when disconnecting the connector.

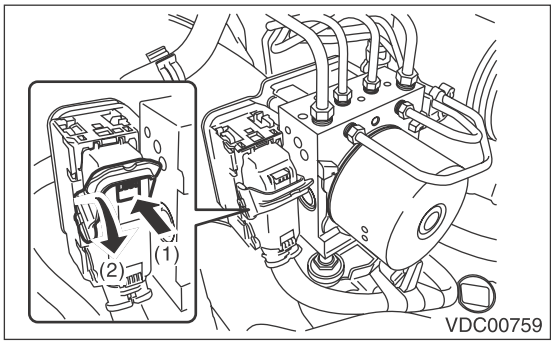

4) Disconnect the brake pipes from the VDCCM&H/U.
5) Wrap the brake pipe with a vinyl bag so as not to spill the brake fluid on the vehicle body.

CAUTION:
If brake fluid is spilled on the vehicle body, wash it off immediately with water and wipe clean.
6) Remove the bolt, and then remove the VDCCM&H/U.

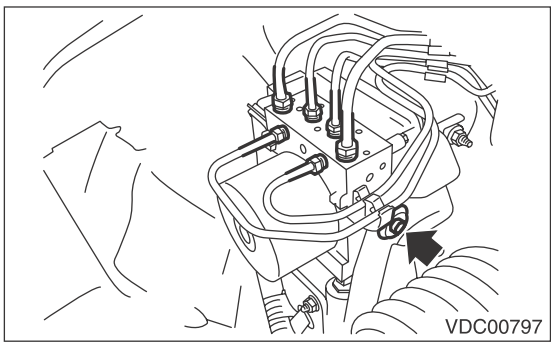

CAUTION:
- **Do not drop or bump the VDCCM&H/U.**
- **Do not turn the VDCCM&H/U upside down or place it sideways for storage.**
- **Be careful not to let foreign matter enter the VDCCM&H/U.**
- **Be careful that no water enters the connectors.**

B: INSTALLATION

1) Install in the reverse order of removal.

CAUTION:
When installing the VDCCM&H/U to the bracket, make sure that there is no oil adhered to the threads of VDCCM&H/U. If the oil is adhered, degrease it carefully before tightening.

Tightening torque:
T1: 7.5 N·m (0.76 kgf-m, 5.5 ft-lb)
T2: 15 N·m (1.5 kgf-m, 11.1 ft-lb)
T3: 19 N·m (1.9 kgf-m, 14 ft-lb)

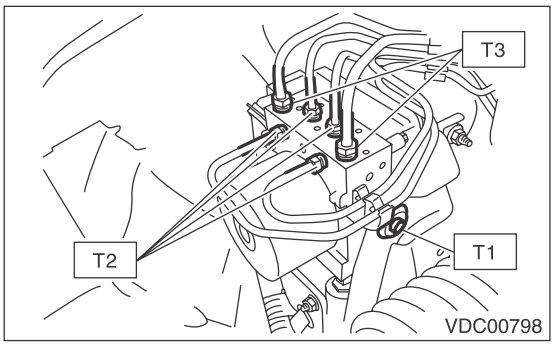

2) Connect the VDCCM&H/U connector.
3) Lift the lock lever to securely lock the connector.
4) Bleed air from the brake system.
5) Check the parameter to confirm that the applied model and grade of the target vehicle are included. <Ref. to VDC(diag)-19, PARAMETER CHECK, OPERATION, Subaru Select Monitor.>
6) If the applied model and grade of the target vehicle are not included on the {Confirm on parameter} display screen, perform parameter selection and registration. <Ref. to VDC(diag)-18, PARAMETER SELECTION, OPERATION, Subaru Select Monitor.>

NOTE:
- When the VDCCM&H/U has been replaced with a new part, be sure to perform parameter selection and registration.
- Parameter selection and registration operation requires the Subaru Select Monitor.
- When no data is registered, ABS/EBD/VDC warning light illuminates and the DTC “Parameter selection error” is detected.

7) Perform “Set up mode for Neutral of Steering Angle Sensor & Lateral G Sensor 0 point”. <Ref. to VDC-10, SET UP MODE FOR NEUTRAL OF STEERING ANGLE SENSOR & LATERAL G SENSOR 0 POINT, ADJUSTMENT, VDC Control Module and Hydraulic Control Unit (VDCCM&H/U).>

8) Perform “Longitudinal G sensor & lateral G sensor 0 point setting mode”. <Ref. to VDC-11, LONGITUDINAL G SENSOR & LATERAL G SENSOR 0 POINT SETTING MODE, ADJUSTMENT, VDC Control Module and Hydraulic Control Unit (VDCCM&H/U).>

C: INSPECTION

1) Check the condition of connection and settlement of connector.
2) Check the identification label of the VDCCM&H/U.
Refer to “SPECIFICATION” for identification label. <Ref. to VDC-2, SPECIFICATION, General Description.>

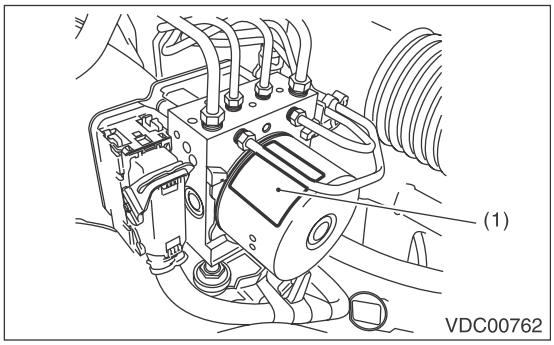

(1) Identification label

1. CHECKING THE HYDRAULIC UNIT ABS OPERATION BY PRESSURE GAUGE

1) Lift up the vehicle, and remove the wheels.
2) Remove the air bleeder screws from FL and FR caliper bodies.
3) Connect two pressure gauges to FL and FR caliper bodies.

CAUTION:
• Use a pressure gauge used exclusively for brake fluid measurement.
• Do not use the pressure gauge used for the measurement of transmission oil. Doing so will cause the piston seal to expand and deform.

NOTE:
Wrap sealing tape around the pressure gauge.

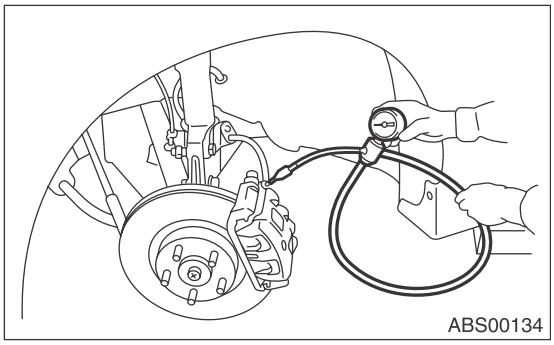

4) Bleed air from the pressure gauges and the FL and FR caliper bodies.
5) Perform ABS sequence control. <Ref. to VDC-12, ABS Sequence Control.>
6) When the hydraulic unit begins to work, first the FL side performs decompression, hold and compression, and then the FR side performs decompression, hold and compression.
7) Read values indicated on the pressure gauge and check if the fluctuation of the values between decompression and compression meets the standard values. Depress the brake pedal and check that the kick-back is normal, and tightness is normal.

	Front wheel	Rear wheel
Initial value	3,500 kPa (36 kgf/cm^2, 511 psi)	3,500 kPa (36 kgf/cm^2, 511 psi)
When depressurized	500 kPa (5 kgf/cm^2, 73 psi) or less	500 kPa (5 kgf/cm^2, 73 psi) or less
When pressurized	3,500 kPa (36 kgf/cm^2, 511 psi) or more	3,500 kPa (36 kgf/cm^2, 511 psi) or more

8) Disconnect the pressure gauges from FL and FR caliper bodies.
9) Install the air bleeder screws of FL and FR caliper bodies.
10) Remove the air bleeder screws from RL and RR caliper bodies.
11) Connect two pressure gauges to RL and RR caliper bodies.
12) Bleed air from the brake system.
13) Bleed air from RL and RR caliper bodies, and pressure gauge.
14) Perform ABS sequence control. <Ref. to VDC-12, ABS Sequence Control.>
15) When the hydraulic unit begins to work, first the RR side performs decompression, hold and compression, and then the RL side performs decompression, hold and compression.
16) Read values indicated on the pressure gauge and check if the fluctuation of the values between decompression and compression meets specification. Depress the brake pedal and check that the kick-back is normal, and tightness is normal.
17) Disconnect the pressure gauge from the RL and RR caliper bodies.
18) Install the air bleeder screws of RL and RR caliper bodies.
19) Bleed air from the brake system.

2. CHECKING THE HYDRAULIC UNIT ABS OPERATION WITH THE BRAKE TESTER

1) Set wheels other than the one to measure on free rollers.
2) Prepare for ABS sequence control operation. <Ref. to VDC-12, ABS Sequence Control.>
3) Set the front wheels or rear wheels on the brake tester, and set the gear to neutral.

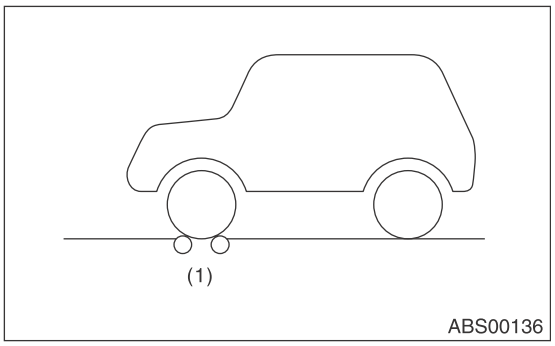

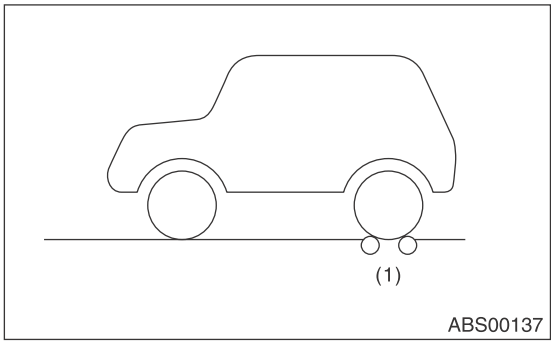

(1) Brake tester

4) Operate the brake tester.
5) Perform ABS sequence control. <Ref. to VDC-12, ABS Sequence Control.>
6) When the hydraulic unit begins to work, check the following work sequence.
(1) The FL wheel performs decompression, hold and compression in sequence, and subsequently the FR wheel repeats the cycle.
(2) The RR wheel performs decompression, hold and compression in sequence, and subsequently the RL wheel repeats the cycle.
7) Read values indicated on the brake tester and check if the fluctuation of the values between decompression and compression meets specification.

	Front wheel	Rear wheel
Initial value	1,000 N (102 kgf, 225 lb)	1,000 N (102 kgf, 225 lb)
When depressurized	500 N (51 kgf, 112 lb) or less	500 N (51 kgf, 112 lb) or less
When pressurized	1,000 N (102 kgf, 225 lb) or more	1,000 N (102 kgf, 225 lb) or more

8) After the inspection, depress the brake pedal and check that it is not abnormally hard, and tightness is normal.

3. CHECKING THE HYDRAULIC UNIT VDC OPERATION USING A PRESSURE GAUGE

1) Lift up the vehicle, and remove the wheels.
2) Remove the air bleeder screws from FL and FR caliper bodies.
3) Connect two pressure gauges to FL and FR caliper bodies.

CAUTION:
• Use a pressure gauge used exclusively for brake fluid measurement.
• Do not use a pressure gauge used for the measuring transmission oil pressure, as the piston seal may expand and deform.

NOTE:
Wrap sealing tape around the pressure gauge.

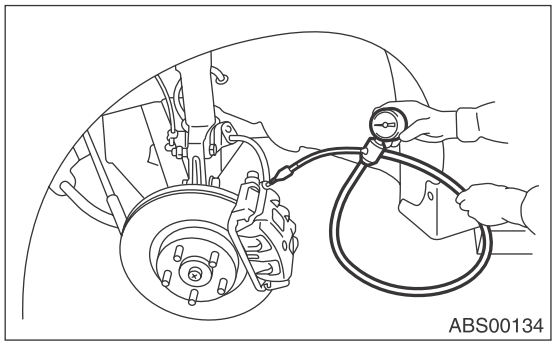

4) Bleed air from the pressure gauge.
5) Perform VDC sequence control. <Ref. to VDC-15, VDC Sequence Control.>
6) When the hydraulic unit begins to work, first the FL side performs compression, hold, and decompression, and then the FR side performs compression, hold, and decompression.
7) Read values indicated on the pressure gauge and check if the fluctuation of the values between decompression and compression meets specification. Depress the brake pedal and check that it is not abnormally hard, and tightness is normal.

	Front wheel	Rear wheel
When pressurized	3,000 kPa (31 kgf/cm^2, 441 psi) or more	3,000 kPa (31 kgf/cm^2, 441 psi) or more
When depressurized	500 kPa (5 kgf/cm^2, 73 psi) or less	500 kPa (5 kgf/cm^2, 73 psi) or less

8) Disconnect the pressure gauges from FL and FR caliper bodies.
9) Install the air bleeder screws of FL and FR caliper bodies.
10) Remove the air bleeder screws from RL and RR caliper bodies.

11) Connect two pressure gauges to RL and RR caliper bodies.
12) Bleed air from RL and RR caliper bodies, and pressure gauge.
13) Perform VDC sequence control. <Ref. to VDC-15, VDC Sequence Control.>
14) When the hydraulic unit begins to work, first the RR side performs compression, hold, and decompression, and then the RL side performs compression, hold, and decompression.
15) Read the values indicated on the pressure gauges and check if it is within specification. Depress the brake pedal and check that it is not abnormally hard, and tightness is normal.
16) Disconnect the pressure gauge from the RL and RR caliper bodies.
17) Install the air bleeder screws of RL and RR caliper bodies.
18) Bleed air from the brake line.

4. CHECK HYDRAULIC UNIT VDC OPERATION WITH BRAKE TESTER

1) Set wheels other than the one to be measured on free rollers.
2) Prepare to operate the VDC sequence control. <Ref. to VDC-15, VDC Sequence Control.>
3) Set the front wheels or rear wheels on the brake tester, and set the gear to neutral.

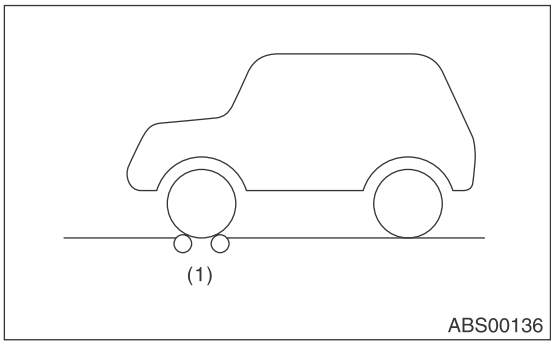

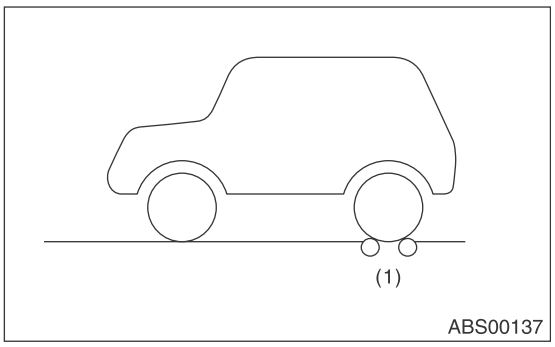

(1) Brake tester

4) Operate the brake tester.
5) Perform VDC sequence control. <Ref. to VDC-15, VDC Sequence Control.>
6) When the hydraulic unit begins to work, check the following work sequence.
   (1) The FL wheel performs compression, hold and decompression in sequence, and subsequently the FR wheel repeats the cycle.
   (2) The RR wheel performs compression, hold and decompression in sequence, and subsequently the RL wheel repeats the cycle.
7) Read values indicated on the brake tester and check if the fluctuation of the values between decompression and compression meets specification.

	Front wheel	Rear wheel
When pressurized	2,000 N (204 kgf, 450 lbf) or more	2,000 N (204 kgf, 450 lbf) or more
When depressurized	500 N (51 kgf, 112 lbf) or less	500 N (51 kgf, 112 lbf) or less

8) After the inspection, depress the brake pedal and check that it is not abnormally hard, and tightness is normal.

D: ADJUSTMENT

1. SET UP MODE FOR NEUTRAL OF STEERING ANGLE SENSOR & LATERAL G SENSOR 0 POINT

Perform this mode after installing, replacing or adjusting the following parts.
- Steering angle sensor
- Steering wheel
- Suspension parts
- Wheel alignment
- VDCCM&H/U
- VDCCM&H/U bracket

1) Set the steering wheel to the neutral position.
2) Connect the Subaru Select Monitor.
3) On the «Main Menu» display, select {Each System Check}.
4) On the «System Selection Menu» display, select {Brake Control System}.
5) When {VDC} is displayed, select the [OK] button.
6) On the «Brake Control Diagnosis» display, select {Current Data Display & Save}.
7) Read {Steering angle sensor value}.
8) Check that the displayed value is between – 10 and 10 deg.
9) On the «Function Check Sequence» display, select {Set up mode for Neutral of Steering Angle Sensor & Lateral G Sensor 0 point}.
10) Drive the vehicle for 10 minutes, and check that there is no system malfunction or the warning light illumination while driving.
11) Make sure that the DTC is not stored.

2. LONGITUDINAL G SENSOR & LATERAL G SENSOR 0 POINT SETTING MODE

Perform this mode after installing or replacing the following parts.

- Suspension parts
- VDCCM&H/U
- VDCCM&H/U bracket

1) Park the vehicle on a level surface with all wheels aligned straight.
2) Connect the Subaru Select Monitor.
3) On the «Main Menu» display, select {Each System Check}.
4) On the «System Selection Menu» display, select {Brake Control System}.
5) When {VDC} is displayed, select the [OK] button.
6) On the «Brake Control Diagnosis» display, select {Current Data Display & Save}.
7) Read {Fr Rr G sensor Output} and {Lateral G sensor Output}.
8) Check that the displayed value is between – 2 and 2 m/s^2.
9) On the «Function Check Sequence» display, select {Longitudinal G sensor & lateral G sensor 0 point setting mode}.
10) Drive the vehicle for 10 minutes, and check that there is no system malfunction or the warning light illumination while driving.
11) Make sure that the DTC is not stored.

3. ABS Sequence Control

A: OPERATION

1) While the ABS sequence control is being performed, the operation of the hydraulic unit can be checked using the brake tester or pressure gauge after the hydraulic unit solenoid valve operation.
2) ABS sequence control can be started by the Subaru Select Monitor.

1. ABS SEQUENCE CONTROL WITH SUBARU SELECT MONITOR

NOTE:
In the event of any trouble, the ABS sequence control will not operate.
1) Connect the Subaru Select Monitor.
2) Follow the procedures displayed in the Subaru Select Monitor to execute the following.
   (1) When using a brake tester, press the brake pedal pad with a force of 1,000 N (102 kgf, 225 lbf).
   (2) When using a pressure gauge, press the brake pedal so that the pressure gauge indicates 3,500 kPa (36 kgf/cm^2, 511 psi).
3) The brake system being operated is displayed on the Subaru Select Monitor.

2. CONDITIONS FOR ABS SEQUENCE CONTROL

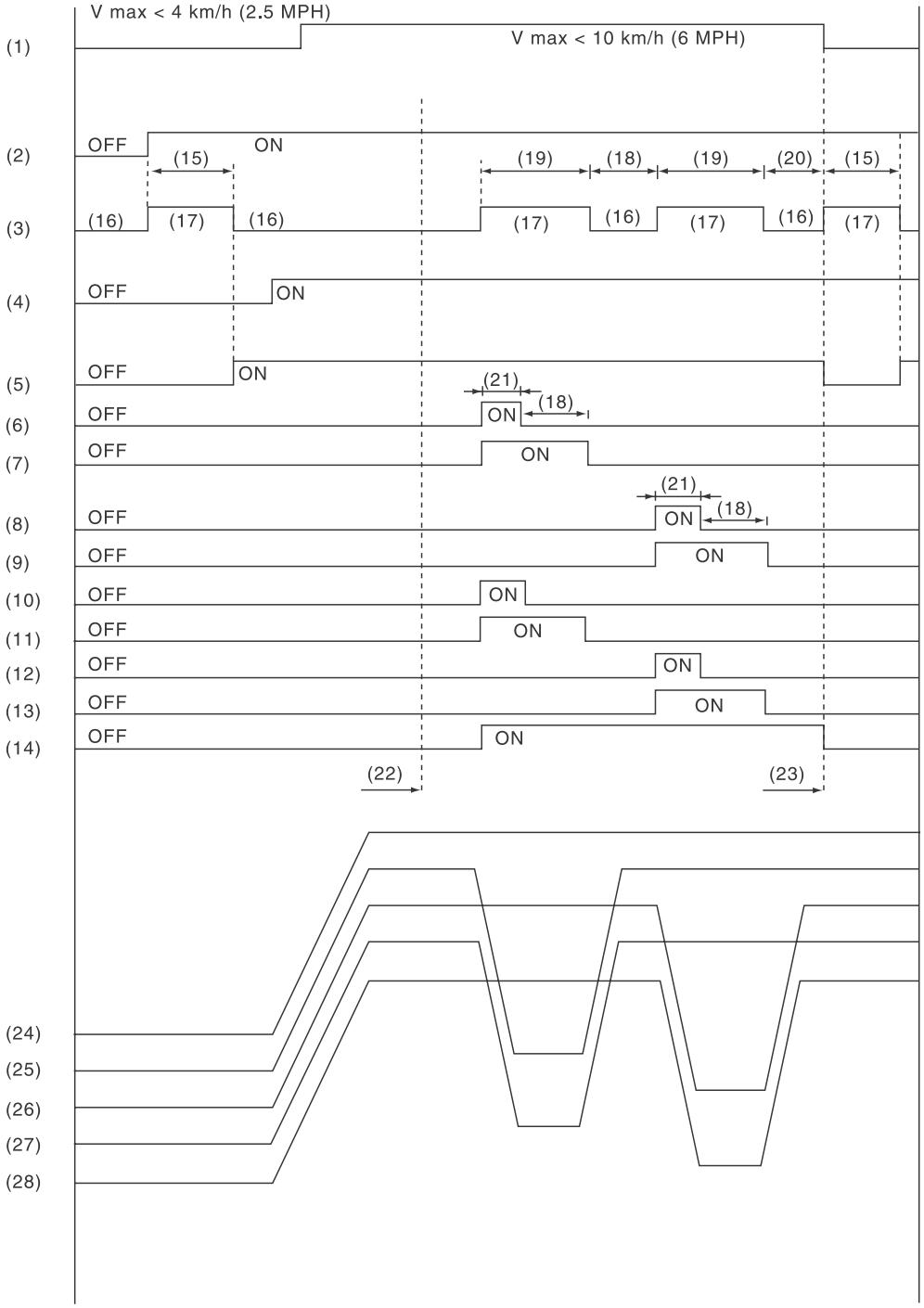

VDC00799

(1) All wheel speed
(2) Ignition key
(3) ABS warning light
(4) Stop light switch
(5) Valve relay
(6) FL decompression valve
(7) FL compression valve
(8) FR decompression valve
(9) FR compression valve
(10) RR decompression valve
(11) RR compression valve
(12) RL decompression valve
(13) RL compression valve
(14) Pump motor
(15) 2 seconds
(16) Light OFF
(17) Light ON
(18) 1.0 seconds
(19) 1.4 seconds
(20) 0.6 seconds
(21) 0.4 seconds
(22) Point A
(23) Reset
(24) Master cylinder pressure
(25) FL wheel cylinder pressure
(26) FR wheel cylinder pressure
(27) RR wheel cylinder pressure
(28) RL wheel cylinder pressure

NOTE:
The control operation starts from point A.

B: SPECIFICATION

1. CONDITIONS FOR COMPLETION OF ABS SEQUENCE CONTROL

When the following conditions develop, the ABS sequence control stops and ABS operation is returned to the normal control mode.
- When the speed of at least one wheel reaches 10 km/h (6 MPH).
- When the brake pedal is released during ABS sequence control and the stop light switch is becomes OFF.
- After completion of ABS sequence control.
- When a malfunction is detected.

4. VDC Sequence Control

A: OPERATION

1) While the VDC sequence control is performed, the operation of the hydraulic unit can be checked using the brake tester or pressure gauge after the hydraulic unit solenoid valve is operated.
2) VDC sequence control can be started by Subaru Select Monitor.

1. VDC SEQUENCE CONTROL WITH SUBARU SELECT MONITOR

NOTE:
In the event of any trouble, sequence control will not operate.
1) Connect the Subaru Select Monitor.
2) Operate according to the procedures displayed in the Subaru Select Monitor.
3) Operation points will be displayed on Subaru Select Monitor.

2. CONDITIONS FOR VDC SEQUENCE CONTROL

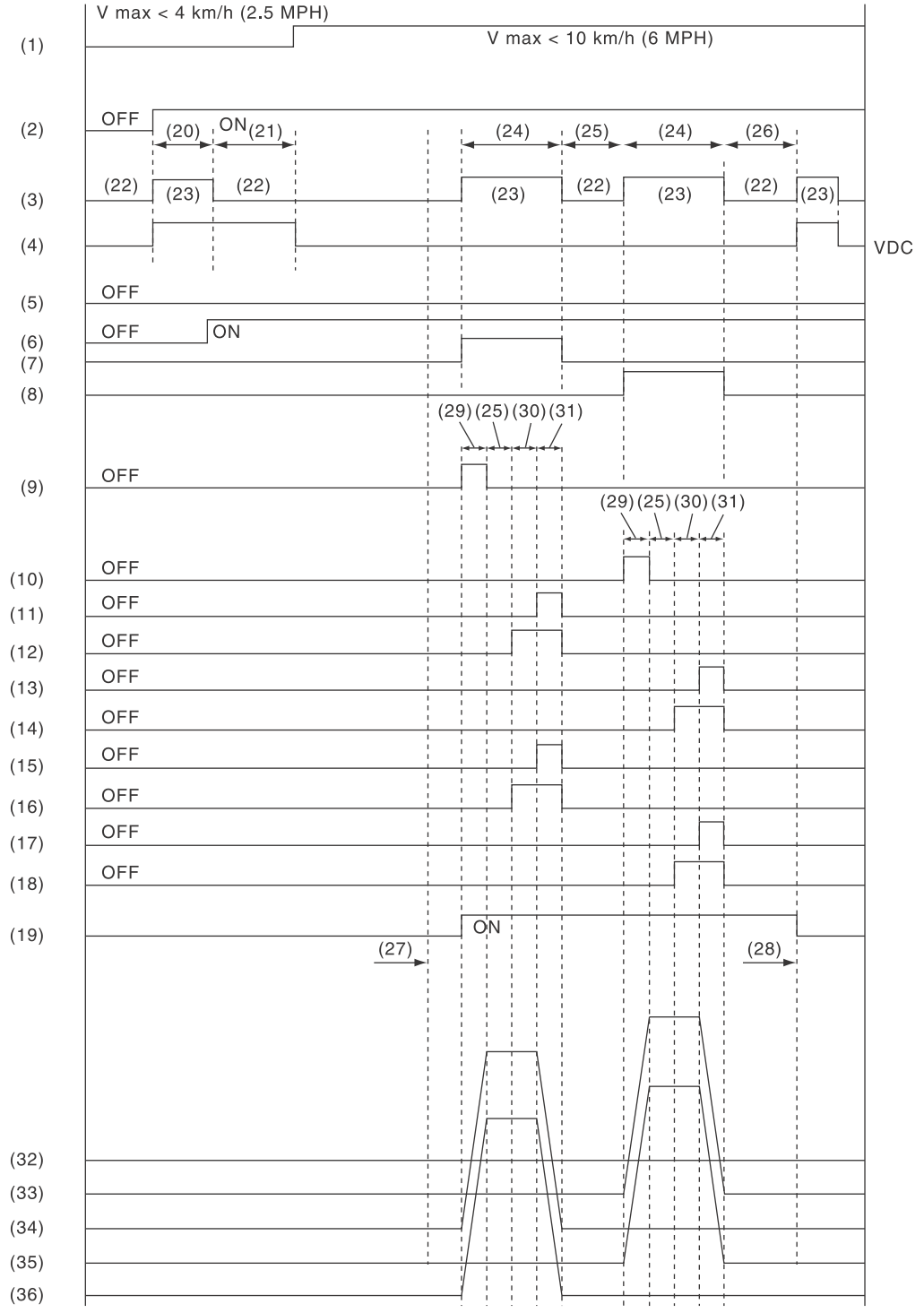

VDC00800

(1) All wheel speed
(2) Ignition key
(3) ABS warning light
(4) VDC warning light
(5) Stop light switch
(6) Valve relay
(7) VDC switching valve 1 FL
(8) VDC switching valve 1 FR
(9) VDC switching valve 2 FL
(10) VDC switching valve 2 FR
(11) FL decompression valve
(12) FL compression valve
(13) FR decompression valve
(14) FR compression valve
(15) RR decompression valve
(16) RR compression valve
(17) RL decompression valve
(18) RL compression valve
(19) Pump motor
(20) 2 seconds
(21) Approx. 1 second
(22) Light OFF
(23) Light ON
(24) 3.4 seconds
(25) 1 second
(26) 1.6 seconds
(27) Point A
(28) Reset
(29) 0.8 seconds
(30) 1.2 seconds
(31) 0.4 seconds
(32) Master cylinder pressure
(33) FR wheel cylinder pressure
(34) FL wheel cylinder pressure
(35) RL wheel cylinder pressure
(36) RR wheel cylinder pressure

NOTE:
The control operation starts from point A.

B: SPECIFICATION

1. CONDITIONS FOR COMPLETION OF VDC SEQUENCE CONTROL

When the following conditions develop, the VDC sequence control stops and VDC operation is returned to the normal control mode.

- When the speed of at least one wheel reaches 10 km/h (6 MPH).
- After completion of VDC sequence control.
- When a malfunction is detected.

5. Yaw Rate and G Sensor

A: NOTE

Yaw rate & longitudinal G and lateral G sensor are integrated with the VDC control module.

B: INSPECTION

1. YAW RATE & LONGITUDINAL G AND LATERAL G SENSOR SIGNAL

	Step	Check	Yes	No
1	**CHECK YAW RATE & G SENSOR.** 1) Select “Current Data Display & Save” on the Subaru Select Monitor. 2) Read the output of yaw rate & G sensor.	When the vehicle is placed horizontally, are the displayed values –1.5 — 1.5 m/s^2 for longitudinal G and lateral G sensor, and –4 — 4 deg/s for yaw rate sensor?	Go to step **2**.	Replace the VDCCM.
2	**DRIVING INSPECTION.** Drive for approximately 10 minutes, and check that there is no system malfunction or the warning light illumination while driving.	Is there any abnormal movement or the warning light illumination while driving?	Perform the diagnosis according to DTCs for the VDC system. <Ref. to VDC(diag)-35, List of Diagnostic Trouble Code (DTC).>	G sensor is normal.

6. Steering Angle Sensor

A: REPLACEMENT

1) Set the steering wheel in a straight-ahead position.
2) Disconnect the ground cable from battery.
3) Remove the airbag module. <Ref. to AB-31, REMOVAL, Driver's Airbag Module.>

CAUTION:
Always refer to "Airbag System" before performing the service operation. <Ref. to AB-9, CAUTION, General Description.>
4) Remove the roll connector. <Ref. to AB-89, REMOVAL, Roll Connector.>
5) Disengage tabs, and remove the steering angle sensor from the roll connector.

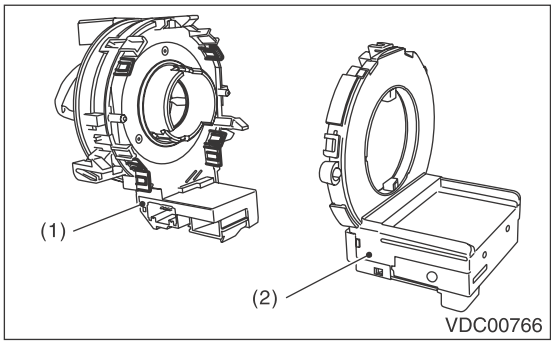

(1) Steering roll connector
(2) Steering angle sensor

6) Remove the clip attached to the protrusion of new steering angle sensor.

CAUTION:
Do not rotate the steering angle sensor protrusion.

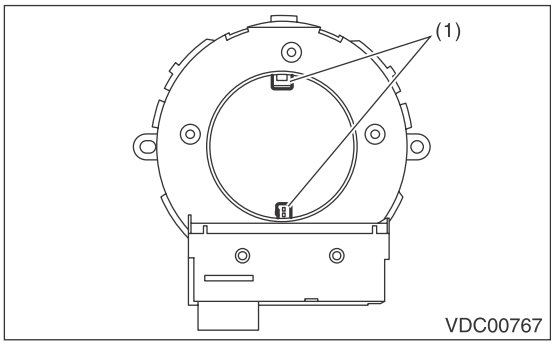

(1) Protrusion portion

7) Align the center of roll connector. <Ref. to AB-91, INSTALLATION, Roll Connector.>
8) Align the position of the protrusion and install steering angle sensor to roll connector.
9) Install the roll connector. <Ref. to AB-91, INSTALLATION, Roll Connector.>
10) After installation, perform the neutral position setting of the steering angle sensor. <Ref. to VDC-10, SET UP MODE FOR NEUTRAL OF STEERING ANGLE SENSOR & LATERAL G SENSOR 0 POINT, ADJUSTMENT, VDC Control Module and Hydraulic Control Unit (VDCCM&H/U).>

7. Front ABS Wheel Speed Sensor

A: REMOVAL

1) Disconnect the ground cable from battery.
2) Disconnect the ABS wheel speed sensor connector in the engine compartment.

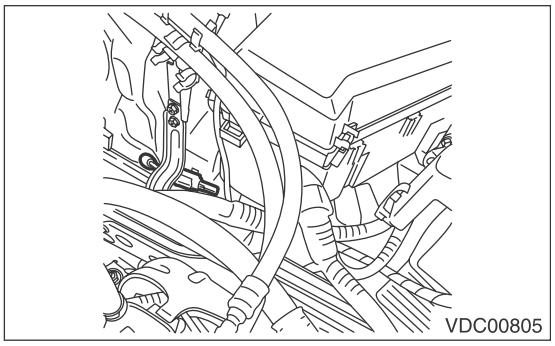

3) Remove the sensor harness clip and the grommet.

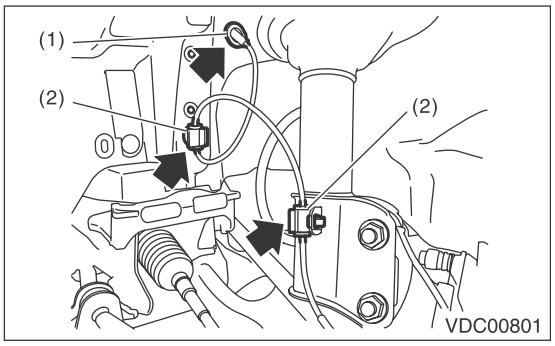

(1) Grommet
(2) Sensor harness clip

4) Remove the front ABS wheel speed sensor from housing.

CAUTION:
• Be careful not to damage the sensor.
• Do not apply excessive force to the sensor harness.

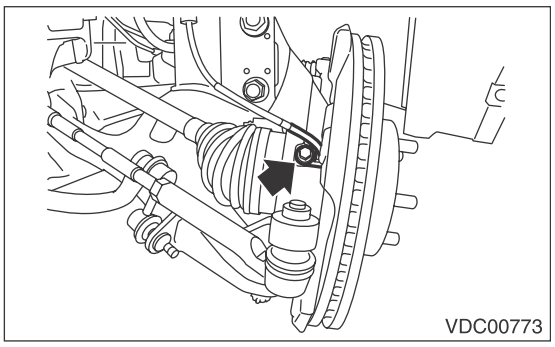

B: INSTALLATION

Install in the reverse order of removal.

Tightening torque:
Sensor:
7.5 N·m (0.76 kgf-m, 5.5 ft-lb)

CAUTION:
Be careful not to damage the sensor.

NOTE:
• Check the identification (mark) on the harness to make sure there is no warpage. <Ref. to VDC-2, SPECIFICATION, General Description.>
• Check if the harness is not pulled and does not come in contact with the suspension or body while operating the steering.

C: INSPECTION

1. CHECK WITH SUBARU SELECT MONITOR

1) Connect the Subaru Select Monitor to data link connector.
2) Select “Current Data Display & Save”. Check if the speed indicated on the display changes in the same manner as the speedometer reading during acceleration/deceleration when the steering wheel is in the straight-ahead position.
3) If the speed indicated on the display does not change, check the ABS wheel speed sensor. <Ref. to VDC-20, ABS WHEEL SPEED SENSOR, INSPECTION, Front ABS Wheel Speed Sensor.>

2. ABS WHEEL SPEED SENSOR

1) Check the tip of the ABS wheel speed sensor for foreign particles or damage. If necessary, clean the tip or replace the ABS wheel speed sensor.
2) Connect a 12 V power supply to No. 1 terminal of sensor connector as shown in the figure, then attach resistance to the No. 2 terminal. Rotate the wheel at about 2.75 km/h (2 MPH), and measure the voltage using an oscilloscope.

Standard value of output voltage:
0.7 — 1.4 V

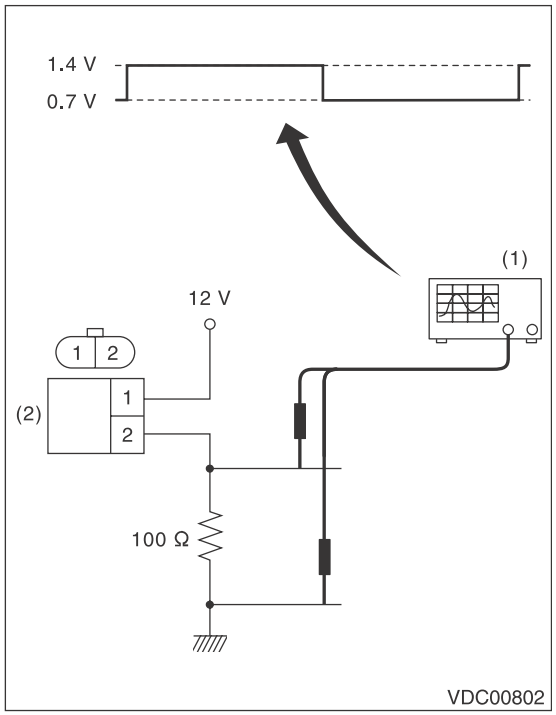

(1) Oscilloscope
(2) ABS wheel speed sensor

NOTE:
Check the ABS wheel speed sensor cable for discontinuity. If necessary, replace with a new part.

8. Rear ABS Wheel Speed Sensor

A: REMOVAL

1) Disconnect the ground cable from battery.
2) Remove the clips, turn over the mud guard, and disconnect the rear ABS wheel speed sensor connector.

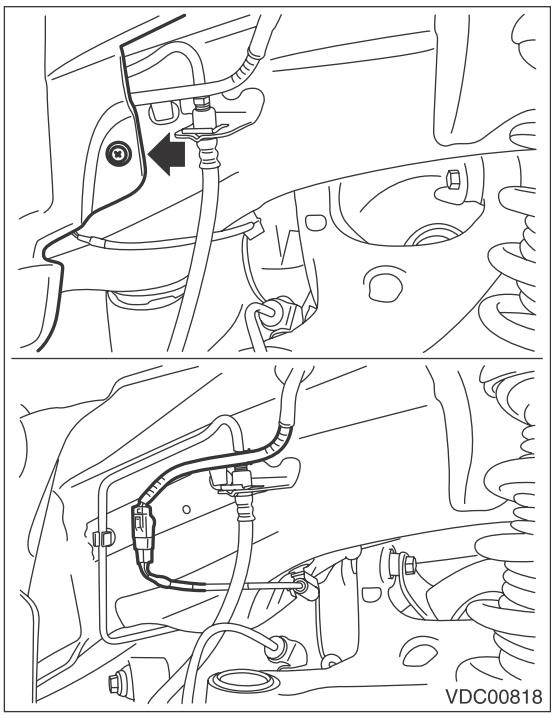

3) Remove the rear ABS wheel speed sensor from the rear housing.

CAUTION:
- **Be careful not to damage the sensor.**
- **Do not apply excessive force to the sensor harness.**

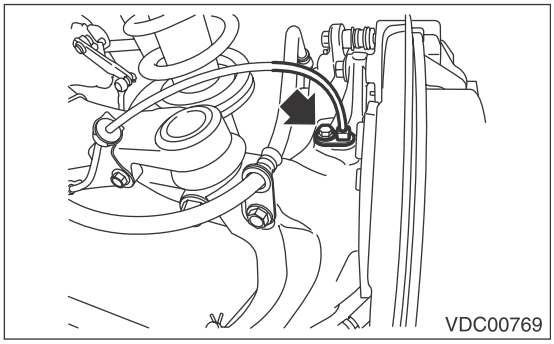

4) Remove the sensor harness clip.
5) Remove the sensor harness bracket from the upper arm.

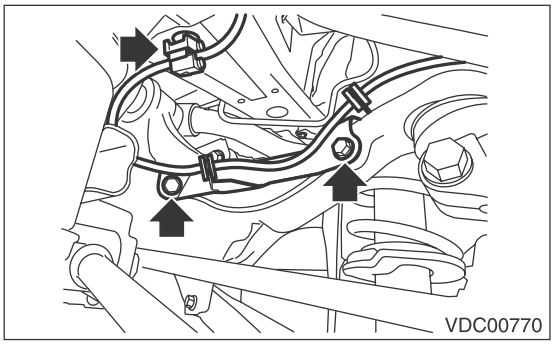

B: INSTALLATION

Install in the reverse order of removal.

CAUTION:
Be careful not to damage the sensor.

Tightening torque:
Sensor:
7.5 N·m (0.76 kgf-m, 5.5 ft-lb)
Bracket:
7.5 N·m (0.76 kgf-m, 5.5 ft-lb)

NOTE:
Check the identification (mark) on the harness to make sure there is no warpage. <Ref. to VDC-2, SPECIFICATION, General Description.>

C: INSPECTION

1. ABS WHEEL SPEED SENSOR

<Ref. to VDC-20, ABS WHEEL SPEED SENSOR, INSPECTION, Front ABS Wheel Speed Sensor.>

9. Front Magnetic Encoder

A: REMOVAL

Refer to “Front Hub Bearing” for removal, because the front magnetic encoder is integrated with front hub bearing.
<Ref. to DS-16, REMOVAL, Front Hub Unit Bearing.>

B: INSTALLATION

Refer to “Front Hub Bearing” for installation, because the front magnetic encoder is integrated with front hub bearing.
<Ref. to DS-17, INSTALLATION, Front Hub Unit Bearing.>

C: INSPECTION

Visually check the magnetic encoder for any damage. If necessary, replace with a new hub unit bearing.

NOTE:
Because the magnetic encoder is integrated with hub unit bearing assembly, replace the hub unit bearing with a new part if there is any defect found on the magnetic encoder.

10.Rear Magnetic Encoder

A: REMOVAL

Refer to “Rear Hub Unit Bearing” for removal, because the rear magnetic encoder is integrated with rear hub unit bearing.
<Ref. to DS-22, REMOVAL, Rear Hub Unit Bearing.>

B: INSTALLATION

Refer to “Rear Hub Unit Bearing” for installation, because the rear magnetic encoder is integrated with rear hub unit bearing.
<Ref. to DS-23, INSTALLATION, Rear Hub Unit Bearing.>

C: INSPECTION

Visually check the magnetic encoder parts for any damage. If necessary, replace with a new hub unit bearing.

NOTE:
Because the magnetic encoder is integrated with hub unit bearing assembly, replace the hub unit bearing with a new part if there is any defect found on the magnetic encoder.

11.VDC OFF Switch

A: REMOVAL

1) Remove the instrument panel lower cover.
2) Remove the VDC OFF switch.

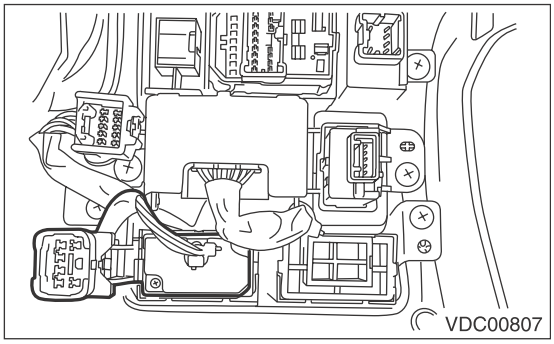

B: INSTALLATION

Install in the reverse order of removal.

C: INSPECTION

Measure the resistance between the VDC OFF switch terminals.

Switch position	Terminal No.	Specification
OFF	1 — 3	1 MΩ or more
ON	1 — 3	Less than 1 Ω

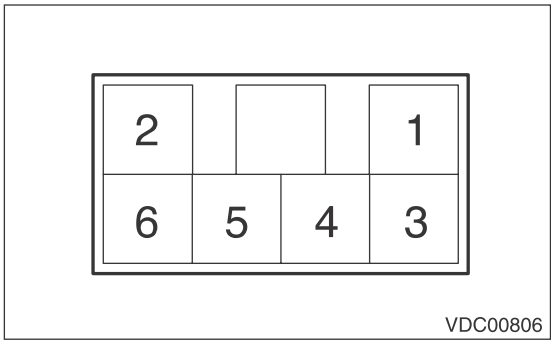

If it exceeds the standard, replace the VDC OFF switch.

VEHICLE DYNAMICS CONTROL (VDC) (DIAGNOSTICS)

VDC(diag)

		Page
1.	Basic Diagnostic Procedure	2
2.	Check List for Interview	4
3.	General Description	8
4.	Electrical Component Location	10
5.	Control Module I/O Signal	12
6.	Subaru Select Monitor	16
7.	Read Diagnostic Trouble Code (DTC)	23
8.	Inspection Mode	24
9.	Clear Memory Mode	25
10.	Warning Light Illumination Pattern	26
11.	List of Diagnostic Trouble Code (DTC)	35
12.	Diagnostic Procedure with Diagnostic Trouble Code (DTC)	39
13.	General Diagnostic Table	89

1. Basic Diagnostic Procedure

A: PROCEDURE

CAUTION:
Remove foreign matter (dust, water, oil etc.) from the VDCCM&H/U connector during removal and installation.

NOTE:
- To check the harness for open or short circuits, shake problem spot or connector.
- Refer to “Check List for Interview”. <Ref. to VDC(diag)-4, Check List for Interview.>

Step		Check	Yes	No
1	**CHECK PRE-INSPECTION.** 1) Ask the customer when and how the trouble occurred using the interview check list. <Ref. to VDC(diag)-4, Check List for Interview.> 2) Before performing diagnostics, check the component which might affect VDC problems. <Ref. to VDC(diag)-8, INSPECTION, General Description.>	Is the component that might influence the VDC problem normal?	Go to step **2**.	Repair or replace each component.
2	**CHECK INDICATION OF DTC.** 1) Turn the ignition switch to OFF. 2) Connect the Subaru Select Monitor to data link connector. 3) Turn the ignition switch to ON and run the Subaru Select Monitor. 4) Read the DTC using the Subaru Select Monitor. <Ref. to VDC(diag)-23, OPERATION, Read Diagnostic Trouble Code (DTC).> NOTE: If the communication function of the Subaru Select Monitor cannot be executed properly, check the communication circuit. <Ref. to VDC(diag)-20, COMMUNICATION FOR INITIALIZING IMPOSSIBLE, INSPECTION, Subaru Select Monitor.>	Is DTC displayed on Subaru Select Monitor?	Record the DTC. Go to step **4**.	Go to step **3**.
3	**PERFORM GENERAL DIAGNOSTICS.** 1) Perform the inspection by referring to “General Diagnostic Table”. <Ref. to VDC(diag)-89, INSPECTION, General Diagnostic Table.> 2) Perform the Clear Memory Mode. <Ref. to VDC(diag)-25, OPERATION, Clear Memory Mode.> 3) Perform the Inspection Mode. <Ref. to VDC(diag)-24, PROCEDURE, Inspection Mode.> 4) Read the DTC. <Ref. to VDC(diag)-23, OPERATION, Read Diagnostic Trouble Code (DTC).> 5) Check the DTC is not displayed.	Do the VDC warning light & VDC indicator light, VDC OFF indicator light and ABS warning light go off after starting the engine?	Finish the diagnosis.	Check the combination meter circuit. <Ref. to VDC(diag)-29, ABS WARNING LIGHT DOES NOT GO OFF, Warning Light Illumination Pattern.> <Ref. to VDC(diag)-30, VDC WARNING LIGHT AND VDC INDICATOR LIGHT DO NOT GO OFF, Warning Light Illumination Pattern.> <Ref. to VDC(diag)-31, VDC OFF INDICATOR LIGHT DOES NOT GO OFF, Warning Light Illumination Pattern.>

Step		Check	Yes	No
4	**CHECK INFORMATION STORED IN FREEZE FRAME DATA.** Using the Subaru Select Monitor, check the freeze frame data of VDC control module.	Are freeze frame data recorded?	Record the freeze frame data. Go to step **5**.	Go to step **5**.
5	**PERFORM DIAGNOSIS.** 1) Refer to “List of Diagnostic Trouble Code (DTC)”. NOTE: For the DTC list, refer to “List of Diagnostic Trouble Code (DTC)”. <Ref. to VDC(diag)-35, LIST, List of Diagnostic Trouble Code (DTC).> 2) Correct the cause of trouble. 3) Perform the Clear Memory Mode. <Ref. to VDC(diag)-25, OPERATION, Clear Memory Mode.> 4) Perform the Inspection Mode. <Ref. to VDC(diag)-24, PROCEDURE, Inspection Mode.> 5) Read the DTC. <Ref. to VDC(diag)-23, OPERATION, Read Diagnostic Trouble Code (DTC).>	Is DTC displayed?	Repeat step 5 until DTC is not shown.	Finish the diagnosis.

2. Check List for Interview

A: CHECK

Check the following item about the vehicle's state.

1. STATE OF ABS WARNING LIGHT

ABS warning light comes on.	❑ Always ❑ Sometimes ❑ Only once ❑ Does not illuminate • When/How long does it illuminate?		
Ignition key position	❑ LOCK ❑ ACC ❑ ON (Before starting engine) ❑ START ❑ ON (After starting engine, engine is running) ❑ ON (After starting engine, engine is at a standstill)		
Timing	❑ Immediately after turning the ignition switch to ON ❑ Immediately after turning the ignition switch to START		
	❑ When accelerating	—	km/h
		—	MPH
	❑ While driving at a constant speed	km/h	MPH
	❑ While decelerating	—	km/h
		—	MPH
	❑ When turning to the right	Steering angle:	deg
		Steering time:	Sec.
	❑ When turning to the left	Steering angle:	deg
		Steering time:	Sec.
	❑ When operating other electrical parts		
	• Part name: • Operating condition:		

2. STATE OF VDC WARNING LIGHT & VDC INDICATOR LIGHT

VDC warning light & VDC indicator light illuminates.	❑ Always ❑ Sometimes ❑ Only once ❑ Does not illuminate • When/How long does it illuminate?		
Ignition key position	❑ LOCK ❑ ACC ❑ ON (Before starting engine) ❑ START ❑ ON (After starting engine, engine is running) ❑ ON (After starting engine, engine is at a standstill)		
Timing	❑ Immediately after turning the ignition switch to ON ❑ Immediately after turning the ignition switch to START		
	❑ When accelerating	—	km/h
		—	MPH
	❑ While driving at a constant speed	km/h	MPH
	❑ While decelerating	—	km/h
		—	MPH
	❑ When turning to the right	Steering angle:	deg
		Steering time:	Sec.
	❑ When turning to the left	Steering angle:	deg
		Steering time:	Sec.
	❑ When operating other electrical parts		
	• Part name: • Operating condition:		

3. STATE OF VDC OFF INDICATOR LIGHT

VDC OFF indicator light comes on.	❑ Always ❑ Sometimes ❑ Only once ❑ Does not illuminate • When/How long does it illuminate?		
Ignition key position	❑ LOCK ❑ ACC ❑ ON (Before starting engine) ❑ START ❑ ON (After starting engine, engine is running) ❑ ON (After starting engine, engine is at a standstill)		
Timing	❑ Immediately after turning the ignition switch to ON ❑ Immediately after turning the ignition switch to START		
	❑ When accelerating	—	km/h
		—	MPH
	❑ While driving at a constant speed	km/h	MPH
	❑ While decelerating	—	km/h
		—	MPH
	❑ When turning to the right	Steering angle:	deg
		Steering time:	Sec.
	❑ When turning to the left	Steering angle:	deg
		Steering time:	Sec.
	❑ When operating other electrical parts		
	• Part name: • Operating condition:		

4. CONDITIONS UNDER WHICH TROUBLE OCCURS

Environment	a) Weather	❑ Fine ❑ Cloudy ❑ Rainy ❑ Snowy ❑ Others:
	b) Ambient temperature	°C (°F)
	c) Road	❑ Inner city ❑ Suburbs ❑ Highway ❑ Local street ❑ Uphill ❑ Downhill ❑ Paved road ❑ Gravel road ❑ Muddy road ❑ Sandy place ❑ Straight road ❑ Sharp curve ❑ Gentle curve ❑ S-curve ❑ Road with a slope on both sides ❑ Others:
	d) Road surface	❑ Dry ❑ Wet ❑ Covered with fresh snow ❑ Covered with hardened snow ❑ Frozen slope ❑ Others:

Condition	a) Brakes	Deceleration:	G
		❑ continuous / ❑ intermittent	
	b) Accelerator	Acceleration:	G
		❑ continuous / ❑ intermittent	
	c) Vehicle speed	km/h	MPH
		❑ Advancing ❑ When accelerating ❑ While decelerating ❑ At low speed ❑ When turning ❑ Others:	
	d) Tire inflation pressure	Front RH tire:	kPa
		Front LH tire:	kPa
		Rear RH tire:	kPa
		Rear LH tire:	kPa
	e) Degree of wear	Front RH tire:	mm (in)
		Front LH tire:	mm (in)
		Rear RH tire:	mm (in)
		Rear LH tire:	mm (in)
	f) Steering wheel	❑ Sharp turning ❑ Gentle turning ❑ Straight forward motion ❑ Gentle return ❑ Sharp return	
	g) Tire/Wheel size	❑ Specified size ❑ Except specification ( )	
	h) Tire variation	❑ Summer tire ❑ Studless tire (Brand:)	
	i) Tire chain is attached: ❑ Yes / ❑ No		
	j) Using T-type tires: ❑ Yes / ❑ No		
	k) Condition of suspension alignment:		
	l) Load condition:		
	m) Repaired parts are used: ❑ Yes / ❑ No		
	• Content:		
	n) Others:		

3. General Description

A: CAUTION

1. SUPPLEMENTAL RESTRAINT SYSTEM "AIRBAG"

Airbag system wiring harness is routed near the ABS wheel speed sensor and VDCCM&H/U.

CAUTION:
• Do not use electrical test devices on airbag system wiring harnesses or connector circuits.
• Be careful not to damage the airbag system wiring harness when servicing the ABS wheel speed sensor and VDCCM&H/U.

B: INSPECTION

Before performing diagnosis, check the following items which might affect VDC problems.

1. BATTERY

Measure the battery voltage and check electrolyte.

Standard voltage:
12 V or more

Specific gravity:
1.260 or more

2. GROUND

Check the tightening torque of ground (GV) bolt for VDC.

Tightening torque:
13 N·m (1.3 kgf-m, 9.6 ft-lb)

3. BRAKE FLUID

1) Check the brake fluid level.
2) Check the brake fluid for leaks.

4. HYDRAULIC UNIT

Check the hydraulic unit.
• With brake tester <Ref. to VDC-9, CHECKING THE HYDRAULIC UNIT ABS OPERATION WITH THE BRAKE TESTER, INSPECTION, VDC Control Module and Hydraulic Control Unit (VDC-CM&H/U).>
• Without brake tester <Ref. to VDC-8, CHECKING THE HYDRAULIC UNIT ABS OPERATION BY PRESSURE GAUGE, INSPECTION, VDC Control Module and Hydraulic Control Unit (VDC-CM&H/U).>

5. BRAKE DRAG

Check for brake drag.

6. BRAKE PAD AND ROTOR

Check the brake pad and rotor.
• Front <Ref. to BR-14, INSPECTION, Front Brake Pad.> <Ref. to BR-15, INSPECTION, Front Disc Rotor.>
• Rear <Ref. to BR-21, INSPECTION, Rear Brake Pad.> <Ref. to BR-22, INSPECTION, Rear Disc Rotor.>

7. TIRE

Check the tire specifications, tire wear and air pressure. <Ref. to WT-2, SPECIFICATION, General Description.>

C: PREPARATION TOOL

1. SPECIAL TOOL

ILLUSTRATION	TOOL NUMBER	DESCRIPTION	REMARKS
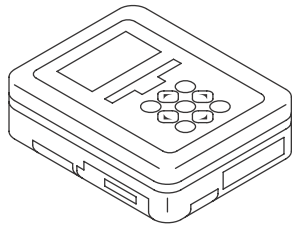 ST1B022XU0	1B022XU0	SUBARU SELECT MONITOR III KIT	Used for troubleshooting the electrical system.

2. GENERAL TOOL

TOOL NAME	REMARKS
Circuit tester	Used for measuring resistance, voltage and current.
Oscilloscope	Used for measuring the sensor.

4. Electrical Component Location

A: LOCATION

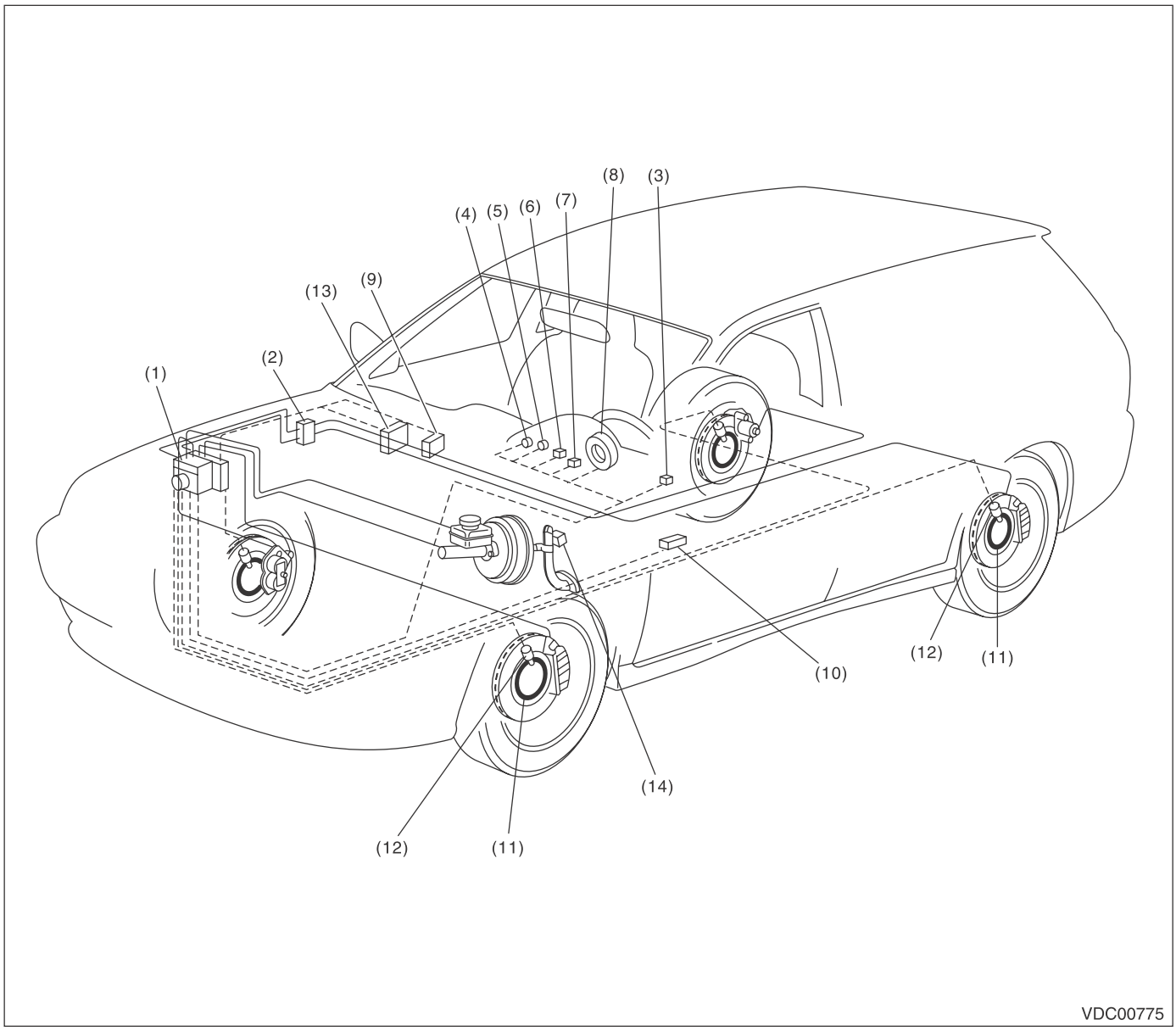

(1)	VDC control module & hydraulic control unit (VDCCM&H/U)	(6)	VDC warning light & VDC indicator light	(11)	Magnetic encoder
(2)	Connector	(7)	VDC OFF indicator light	(12)	ABS wheel speed sensor
(3)	VDC OFF switch	(8)	Steering angle sensor	(13)	Engine control module (ECM)
(4)	ABS warning light	(9)	Transmission control module (TCM)	(14)	Stop light & brake switch
(5)	Brake warning light (EBD warning light)	(10)	Data link connector		

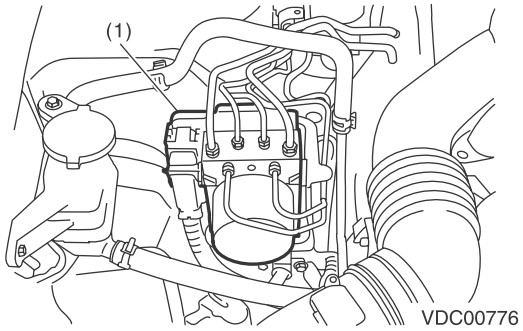
(1)
VDC00776

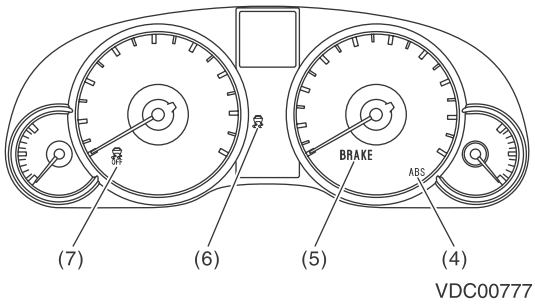
BRAKE
ABS
(7)
(6)
(5)
(4)
VDC00777

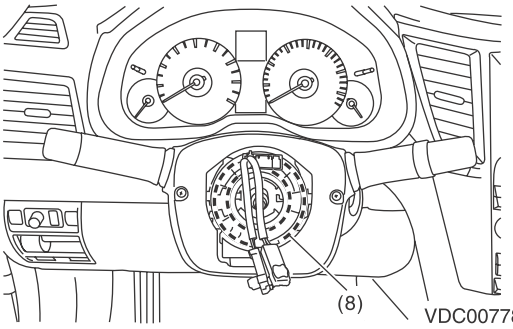
(8)
VDC00778

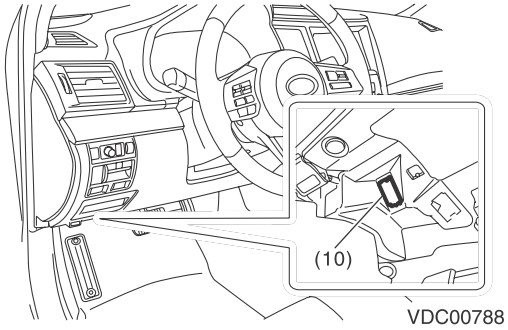
(10)
VDC00788

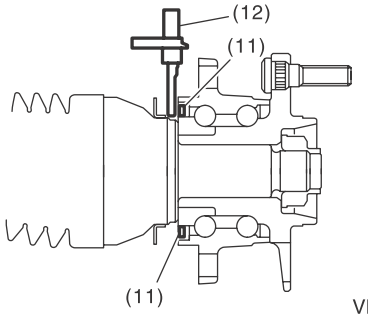
(12)
(11)
(11)
VDC00741

5. Control Module I/O Signal

A: ELECTRICAL SPECIFICATION

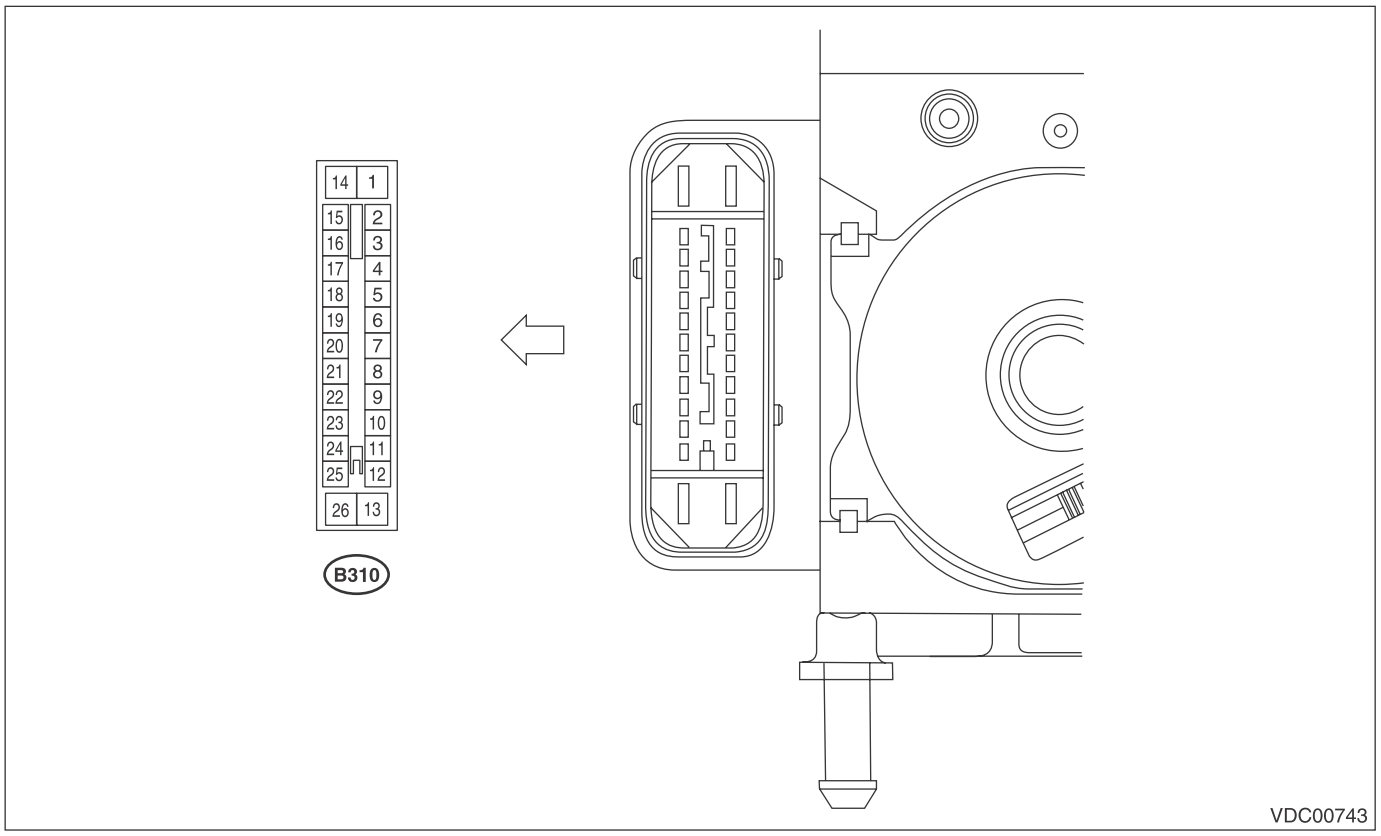

NOTE:
- Terminal numbers in VDCCM&H/U connector are shown in the figure.
- When the connector is removed from VDCCM&H/U, the brake warning light (EBD warning light), ABS warning light, and VDC warning light & VDC indicator light illuminate.

Content			Terminal No. (+) — (–)	Input/Output signal Measured value and measuring conditions
Power supply			7 — 13	10 — 15 V when the ignition switch is ON.
ABS wheel speed sensor	Front LH wheel	Power supply	22 — 13	0 — 18 V
		Signal	21	7 — 14 mA: Rectangle waveform
	Front RH wheel	Power supply	18 — 13	0 — 18 V
		Signal	19	7 — 14 mA: Rectangle waveform
	Rear LH wheel	Power supply	16 — 13	0 — 18 V
		Signal	15	7 — 14 mA: Rectangle waveform
	Rear RH wheel	Power supply	24 — 13	0 — 18 V
		Signal	25	7 — 14 mA: Rectangle waveform
CAN communication line (L)			8	0.5 — 2.25 V pulse signal
CAN communication line (H)			10	2.75 — 4.5 V pulse signal
Valve relay power supply			14 — 13	10 — 15 V when the ignition switch is ON.
Motor relay power supply			1 — 13	10 — 15 V when the ignition switch is ON.
Stop light switch			3 — 13	1.5 V or less when the stop light is OFF; otherwise, 10 — 15 V when the stop light is ON.
Subaru Select Monitor			5 — 13	0 ←→ 12 V pulse (in communication)
Vehicle speed output signal			11	0 ←→ 12 V pulse
VDC OFF switch			9 — 13	0.5 Ω or less when the OFF switch is ON; 1 MΩ or more when the switch is OFF.
Clutch stroke sensor power supply			2 — 13	4.8 — 5.2 V
Clutch stroke sensor ground			23	—
Ground			13	—

B: WIRING DIAGRAM

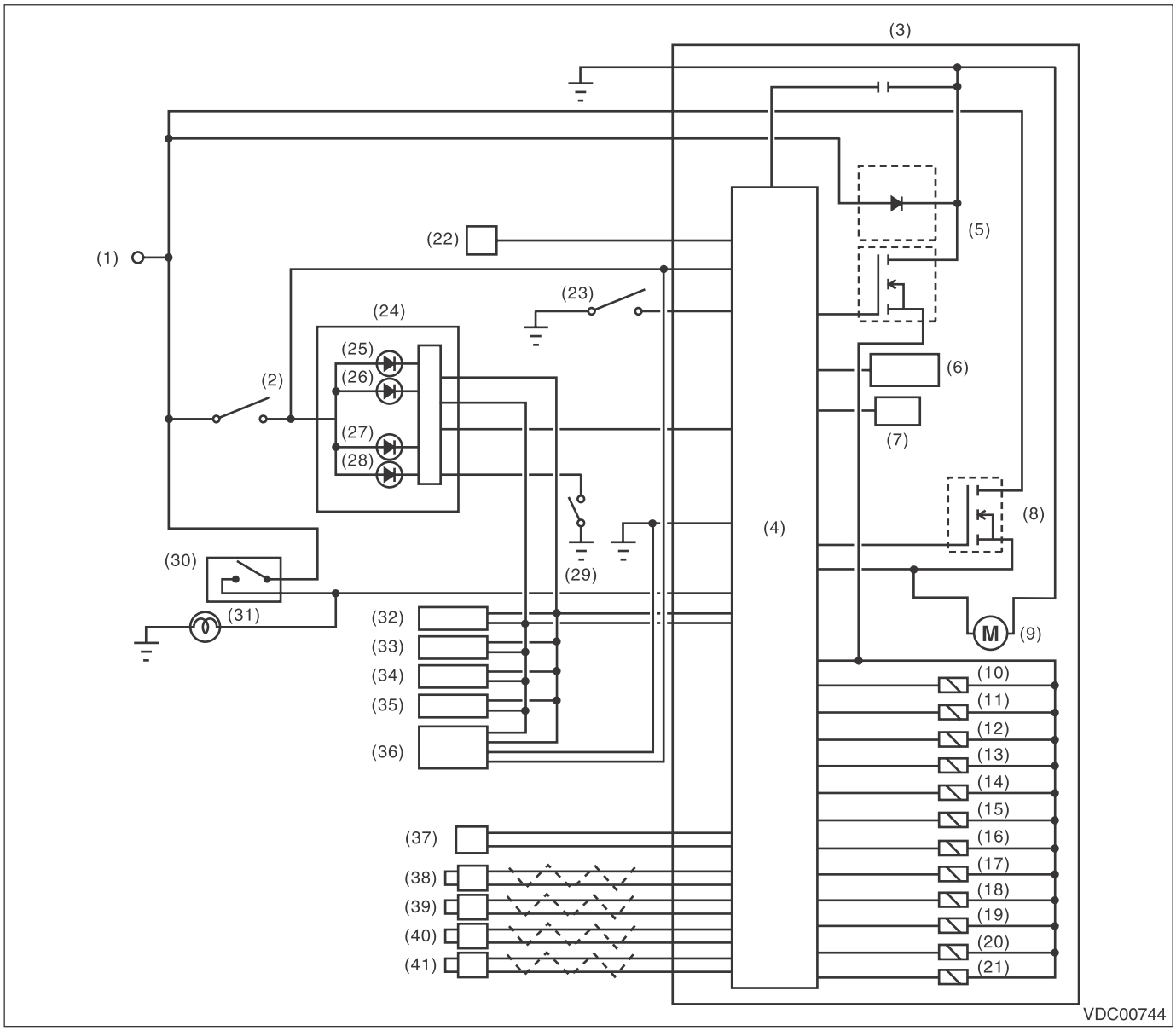

(1) Battery
(2) Ignition switch
(3) VDC control module & hydraulic control unit (VDCCM&H/U)
(4) VDC control module
(5) Valve relay
(6) Pressure sensor
(7) Yaw rate & G sensor
(8) Motor relay
(9) Motor
(10) Front inlet solenoid valve LH
(11) Front outlet solenoid valve LH
(12) Front inlet solenoid valve RH
(13) Front outlet solenoid valve RH
(14) Rear inlet solenoid valve LH
(15) Rear outlet solenoid valve LH
(16) Rear inlet solenoid valve RH
(17) Rear outlet solenoid valve RH
(18) Primary cut solenoid valve
(19) Primary suction solenoid valve
(20) Secondary cut solenoid valve
(21) Secondary suction solenoid valve
(22) Data link connector
(23) VDC OFF switch
(24) Combination meter
(25) VDC OFF indicator light
(26) VDC warning light & VDC indicator light
(27) ABS warning light
(28) Brake warning light (EBD warning light)
(29) Brake fluid level switch
(30) Stop light switch
(31) Stop light
(32) Body integrated unit
(33) Engine control module (ECM)
(34) Transmission control module (TCM)
(35) Parking brake control module
(36) Steering angle sensor
(37) Clutch stroke sensor (MT model only)
(38) Front ABS wheel speed sensor LH
(39) Front ABS wheel speed sensor RH
(40) Rear ABS wheel speed sensor LH
(41) Rear ABS wheel speed sensor RH

6. Subaru Select Monitor

A: OPERATION

1. HOW TO USE SUBARU SELECT MONITOR

NOTE:
• For detailed operation procedures, refer to “PC application help for Subaru Select Monitor”.
• If VDC and Subaru Select Monitor cannot communicate, check the communication circuit. <Ref. to VDC(diag)-20, COMMUNICATION FOR INITIALIZING IMPOSSIBLE, INSPECTION, Subaru Select Monitor.>

2. READ CURRENT DATA

NOTE:
- For detailed operation procedures, refer to “PC application help for Subaru Select Monitor”.
- A list of the support data is shown in the following table.

Display	Contents to be displayed	Unit of measure
FR Wheel Speed	Wheel speed detected by front ABS wheel speed sensor RH is displayed.	km/h or MPH
FL Wheel Speed	Wheel speed detected by front ABS wheel speed sensor LH is displayed.	km/h or MPH
RR Wheel Speed	Wheel speed detected by rear ABS wheel speed sensor RH is displayed.	km/h or MPH
RL Wheel Speed	Wheel speed detected by rear ABS wheel speed sensor LH is displayed.	km/h or MPH
Steering Angle Sensor Op	Steering angle detected by steering angle sensor is displayed.	deg
Yaw Rate Sensor Output	Vehicle angular speed detected by yaw rate sensor is displayed.	deg/s
Longitudinal G sensor output	Vehicle longitudinal acceleration detected by longitudinal G sensor is displayed.	m/s^2
Lateral G sensor Output	Vehicle lateral acceleration detected by lateral G sensor is displayed.	m/s^2
IG power supply voltage	Voltage supplied to VDCCM&H/U is displayed.	V
M. Relay monitor Voltage	Voltage applied to the motor relay is displayed.	V
Motor Relay Signal	Motor relay operation signal is displayed.	ON or OFF
Valve Relay Signal	Valve relay operation signal is displayed.	ON or OFF
EBD Warning Light	ON operation of the EBD warning light is displayed.	ON or OFF
ABS Warning Light	ON operation of the ABS warning light is displayed.	ON or OFF
VDC Warning Light	ON operation of the VDC warning light is displayed.	ON or OFF
EBD Control Flag	EBD operation condition is displayed.	ON or OFF
ABS Control Flag	ABS operation condition is displayed.	ON or OFF
TCS Control Flag	TCS operation condition is displayed.	ON or OFF
VDC Control Flag	VDC operation condition is displayed.	ON or OFF
E/G Control Stop Flag	Engine control command signal is displayed.	1 or 0
OFF Lamp	ON/OFF condition of VDC OFF indicator light is displayed.	ON or OFF
OFF SW Signal	Operation condition of VDC OFF switch is displayed.	ON or OFF
Brake Switch	Brake ON/OFF is displayed.	ON or OFF
Master Cylinder Pressure Sensor	Master cylinder brake fluid pressure detected by pressure sensor is displayed.	bar
FL Wheel Cylinder Pressure Sensor	0 bar is always displayed.	bar
FR Wheel Cylinder Pressure Sensor	0 bar is always displayed.	bar

3. FUNCTION CHECK

Display	Contents of display	Index No.
ABS Sequence Control Mode	Operate the valve and pump motor continuously to perform the ABS sequence control.	<Ref. to VDC-12, ABS Sequence Control.>
VDC Check Mode	Operate the valve and pump motor continuously to perform the VDC sequence control.	<Ref. to VDC-15, VDC Sequence Control.>
Set up mode for Neutral of Steering Angle Sensor & Lateral G Sensor 0 point	Set the steering angle sensor neutral position and the lateral G sensor “0” point.	<Ref. to VDC-10, SET UP MODE FOR NEUTRAL OF STEERING ANGLE SENSOR & LATERAL G SENSOR 0 POINT, ADJUSTMENT, VDC Control Module and Hydraulic Control Unit (VDCCM&H/U).>
Longitudinal G sensor & lateral G sensor 0 point setting mode	Set “0” point of the longitudinal G sensor and the lateral G sensor.	<Ref. to VDC-11, LONGITUDINAL G SENSOR & LATERAL G SENSOR 0 POINT SETTING MODE, ADJUSTMENT, VDC Control Module and Hydraulic Control Unit (VDCCM&H/U).>

4. FREEZE FRAME DATA

NOTE:
• Data stored at the time of trouble occurrence is shown on display.
• Each time a trouble occurs, the latest information is stored in the freeze frame data in memory.
• If a freeze frame data is not properly stored in memory (due to a drop in VDCCM power supply, etc.), a DTC suffixed with a question mark "?" appears on the Subaru Select Monitor display. This shows it may be an unreliable reading.

Display	Contents to be displayed
FR Wheel Speed	Wheel speed detected by front ABS wheel speed sensor RH is displayed in km/h or MPH.
FL Wheel Speed	Wheel speed detected by front ABS wheel speed sensor LH is displayed in km/h or MPH.
RR Wheel Speed	Wheel speed detected by rear ABS wheel speed sensor RH is displayed in km/h or MPH.
RL Wheel Speed	Wheel speed detected by rear ABS wheel speed sensor LH is displayed in km/h or MPH.
Vehicle Speed	Vehicle speed calculated by VDC control module is displayed.
Steering Angle Sensor Op	Steering angle detected by steering angle sensor is displayed.
Yaw Rate Sensor Output	Vehicle angular speed detected by yaw rate sensor is displayed.
Longitudinal G sensor output	Vehicle longitudinal acceleration detected by longitudinal G sensor is displayed.
Lateral G sensor Output	Vehicle lateral acceleration detected by lateral G sensor is displayed.
IG power supply voltage	Voltage supplied to VDC control module is displayed.
Accel. Opening Angle	Acceleration opening is displayed.
Engine Speed	Engine speed on malfunction occurrence is displayed.
Steering angle flag	Whether the absolute angle of the steering angle sensor was determined is displayed.
EBD Control Flag	EBD control condition is displayed.
ABS Control Flag	ABS control condition is displayed.
TCS Control Flag	TCS control condition is displayed.
VDC Control Flag	VDC control condition is displayed.
E/G Control Stop Flag	Engine control command signal is displayed.
OFF Switch Detection	ON/OFF condition of the VDC operated by the driver is displayed.
Brake Switch	Brake ON/OFF is displayed.
Master Cylinder Pressure Sensor	Master cylinder brake fluid pressure detected by pressure sensor is displayed.
FL Wheel Cylinder Pressure Sensor	0 bar is always displayed.
FR Wheel Cylinder Pressure Sensor	0 bar is always displayed.

5. PARAMETER SELECTION

CAUTION:
• Subaru Select Monitor is required for parameter selection.
• This function can be used for the replacement part of VDCCM&H/U.

NOTE:
• When the VDCCM&H/U is replaced with a replacement part, be sure to perform the parameter selection/registration to the VDCCM&H/U using this function.
• To confirm the applied model, refer to the "model number plate" attached on the vehicle. <Ref. to ID-2, IDENTIFICATION, Identification.>
• When the applied model is entered wrong, re-entry is possible.
• When the registration has not been performed, the DTC code "Parameter selection error" is detected together with the ABS/EBD/VDC warning light illumination.
1) Connect the Subaru Select Monitor.
2) On «Main Menu» display, select {Each System Check}.
3) On «System Selection Menu» display, select {Brake Control System}.
4) Click the [OK] button after the {VDC} is displayed.
5) On «Brake Control Diagnosis» display, select {Selection of Parameter}.
6) Check the applied model and option code indicated in the "Model number plate". <Ref. to ID-2, IDENTIFICATION, Identification.>
7) Enter the applied model of 7-digit alphanumeric characters and press the [Enter] key.
8) When the option code screen is displayed after entering the applied model, enter the option code of 4-digit alphanumeric characters and press the [Enter] key. When the option code is 3 digits, add "0" in front and enter the code as 4 digits.
9) When the confirmation screen indicating the vehicle information appears, check that the correct applied model and grade are displayed and click the [OK] button.

NOTE:
When the displayed applied model and grade are different from those of the vehicle, perform registration operations again after clicking the [OK] button.
10) Execute Clear Memory after parameter selection and registration operations because the DTC for “Parameter selection error” is memorized.

6. PARAMETER CHECK

NOTE:
The parameter data registered in the VDCCM is shown on the display.
1) Connect the Subaru Select Monitor.
2) On the «Main Menu» display, select the {Each System Check}.
3) On the «System Selection Menu» display, select the {Brake Control System}.
4) Click the [OK] button after the {VDC} is displayed.
5) On the «Brake Control Diagnosis» display, select the {Confirm on parameter}.
6) On the {Confirm on parameter} display screen, check that the applied model and grade of the target vehicle are included, and click the [OK] button.
7) If the applied model and grade of the target vehicle are not included on the {Confirm on parameter} display screen, perform parameter selection and registration. <Ref. to VDC(diag)-18, PARAMETER SELECTION, OPERATION, Subaru Select Monitor.>

B: INSPECTION

1. COMMUNICATION FOR INITIALIZING IMPOSSIBLE

DETECTING CONDITION:
Defective harness connector
TROUBLE SYMPTOM:
Communication is impossible between VDC and Subaru Select Monitor.
WIRING DIAGRAM:

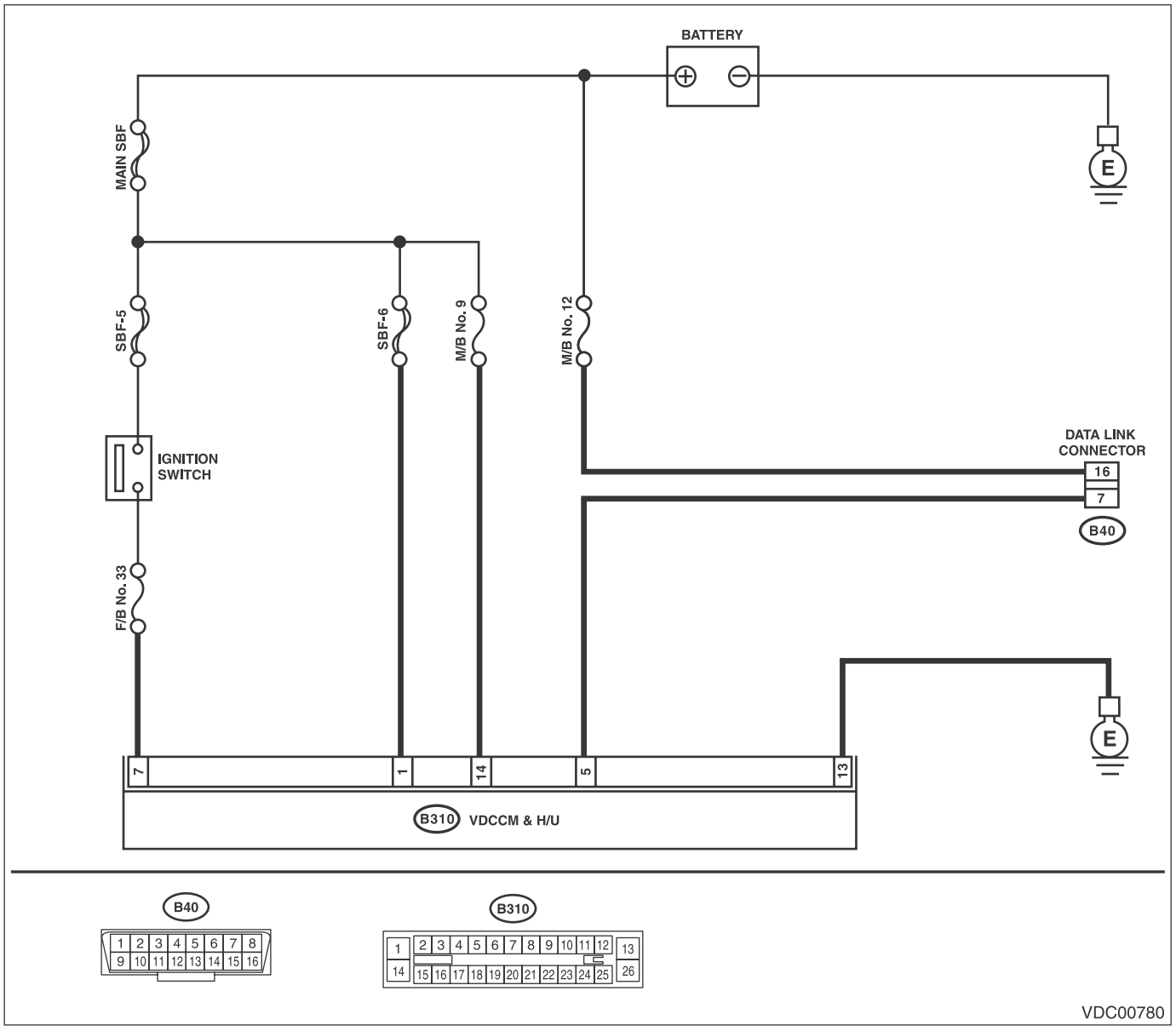

Step		Check	Yes	No
1	**CHECK IGNITION SWITCH.**	Is the ignition switch ON?	Go to step **2**.	Turn the ignition switch to ON, and select VDC mode using Subaru Select Monitor.
2	**CHECK BATTERY.** 1) Turn the ignition switch to OFF. 2) Measure the battery voltage.	Is the voltage 11 V or more?	Go to step **3**.	Charge or replace the battery.

	Step	Check	Yes	No
3	**CHECK BATTERY TERMINAL.**	Is there poor contact at battery terminal?	Repair or tighten the battery terminal.	Go to step **4**.
4	**CHECK SUBARU SELECT MONITOR COMMUNICATION.** 1) Turn the ignition switch to ON. 2) Using the Subaru Select Monitor, check whether communication to other systems can be executed normally.	Is the system name displayed on Subaru Select Monitor?	Go to step **8**.	Go to step **5**.
5	**CHECK SUBARU SELECT MONITOR COMMUNICATION.** 1) Turn the ignition switch to OFF. 2) Disconnect the VDCCM&H/U connector. 3) Turn the ignition switch to ON. 4) Check whether communication to other systems can be executed normally.	Is the system name displayed on Subaru Select Monitor?	Replace the VDCCM&H/U. <Ref. to VDC-7, VDC Control Module and Hydraulic Control Unit (VDCCM&H/U).>	Go to step **6**.
6	**CHECK HARNESS CONNECTOR BETWEEN EACH CONTROL MODULE AND DATA LINK CONNECTOR.** 1) Turn the ignition switch to OFF. 2) Disconnect the connectors from ECM, TCM, airbag CM and impact sensor. **CAUTION:** **When disconnecting the connector from airbag CM, always follow the precautions on AB section. <Ref. to AB-9, CAUTION, General Description.>** 3) Measure the resistance between data link connector and chassis ground. ***Connector & terminal*** ***(B40) No. 7 — Chassis ground:***	Is the resistance 1 MΩ or more?	Go to step **7**.	Repair the harness and connector between each control module and data link connector.
7	**CHECK HARNESS CONNECTOR BETWEEN VDCCM&H/U AND DATA LINK CONNECTOR.** 1) Turn the ignition switch to ON. 2) Measure the voltage between data link connector and chassis ground. ***Connector & terminal*** ***(B40) No. 7 (+) — Chassis ground (–):***	Is the voltage less than 1 V?	Go to step **8**.	Repair the harness and connector between each control module and data link connector.
8	**CHECK HARNESS CONNECTOR BETWEEN VDCCM&H/U AND DATA LINK CONNECTOR.** Measure the resistance between VDCCM&H/U connector and data link connector. ***Connector & terminal*** ***(B310) No. 5 — (B40) No. 7:***	Is the resistance less than 1 Ω?	Go to step **9**.	Repair harness and connector between VDCCM&H/U and data link connector.
9	**CHECK INSTALLATION OF VDCCM&H/U CONNECTOR.** Turn the ignition switch to OFF.	Is the VDCCM&H/U connector inserted into VDCCM&H/U until the clamp locks onto it?	Go to step **10**.	Insert VDCCM&H/U connector into VDCCM&H/U.
10	**CHECK POWER SUPPLY CIRCUIT.** 1) Turn the ignition switch to ON. (engine OFF) 2) Measure the ignition power supply voltage between VDCCM&H/U connector and chassis ground. ***Connector & terminal*** ***(B310) No. 7 (+) — Chassis ground (–):*** ***(B310) No. 14 (+) — Chassis ground (–):*** ***(B310) No. 1 (+) — Chassis ground (–):***	Is the voltage 10 — 15 V?	Go to step **11**.	Repair open circuit in harness between VDCCM&H/U and battery.

	Step	Check	Yes	No
11	**CHECK HARNESS CONNECTOR BETWEEN VDCCM&H/U AND CHASSIS GROUND.** 1) Turn the ignition switch to OFF. 2) Disconnect the connector from the VDCCM&H/U. 3) Measure the resistance of harness between VDCCM&H/U connector and chassis ground. ***Connector & terminal*** ***(B310) No. 13 — Chassis ground:***	Is the resistance less than 10 Ω?	Go to step **12**.	Repair the open circuit of VDCCM&H/U ground harness and poor contact of connector.
12	**CHECK POOR CONTACT OF CONNECTOR.**	Is there poor contact of control module power supply, ground circuit and data link connector?	Repair the connector.	Replace the VDCCM&H/U. <Ref. to VDC-7, VDC Control Module and Hydraulic Control Unit (VDCCM&H/U).>

7. Read Diagnostic Trouble Code (DTC)

A: OPERATION

NOTE:
• For detailed operation procedures, refer to “PC application help for Subaru Select Monitor”.
• For details concerning DTCs, refer to “List of Diagnostic Trouble Code (DTC)”. <Ref. to VDC(diag)-35, List of Diagnostic Trouble Code (DTC).>
• Up to 3 DTCs are displayed in the order of detection.
• If a particular DTC is not stored in memory properly at the occurrence of problem (due to a drop in VDCCM&H/U power supply etc.), the DTC suffixed with a question mark “?” is displayed on Subaru Select Monitor display screen. This shows it may be an unreliable reading.

Display	Contents to be displayed
(Current)	The current DTC is displayed on Subaru Select Monitor display screen.
(Old)	The latest DTC from the history of previous problems is displayed on Subaru Select Monitor display screen.
(Older)	The second latest DTC from the history of previous problems is displayed on the Subaru Select Monitor display screen.
(Before 3)	The third latest DTC from the history of previous problems is displayed on Subaru Select Monitor display screen.

8. Inspection Mode

A: PROCEDURE

Reproduce the malfunction occurrence condition as much as possible.
Drive the vehicle at least ten minutes.

NOTE:
Make sure the vehicle is not dragged to one side under usual driving condition.

9. Clear Memory Mode

A: OPERATION

NOTE:
For detailed operation procedures, refer to “PC application help for Subaru Select Monitor”.

10.Warning Light Illumination Pattern

A: INSPECTION

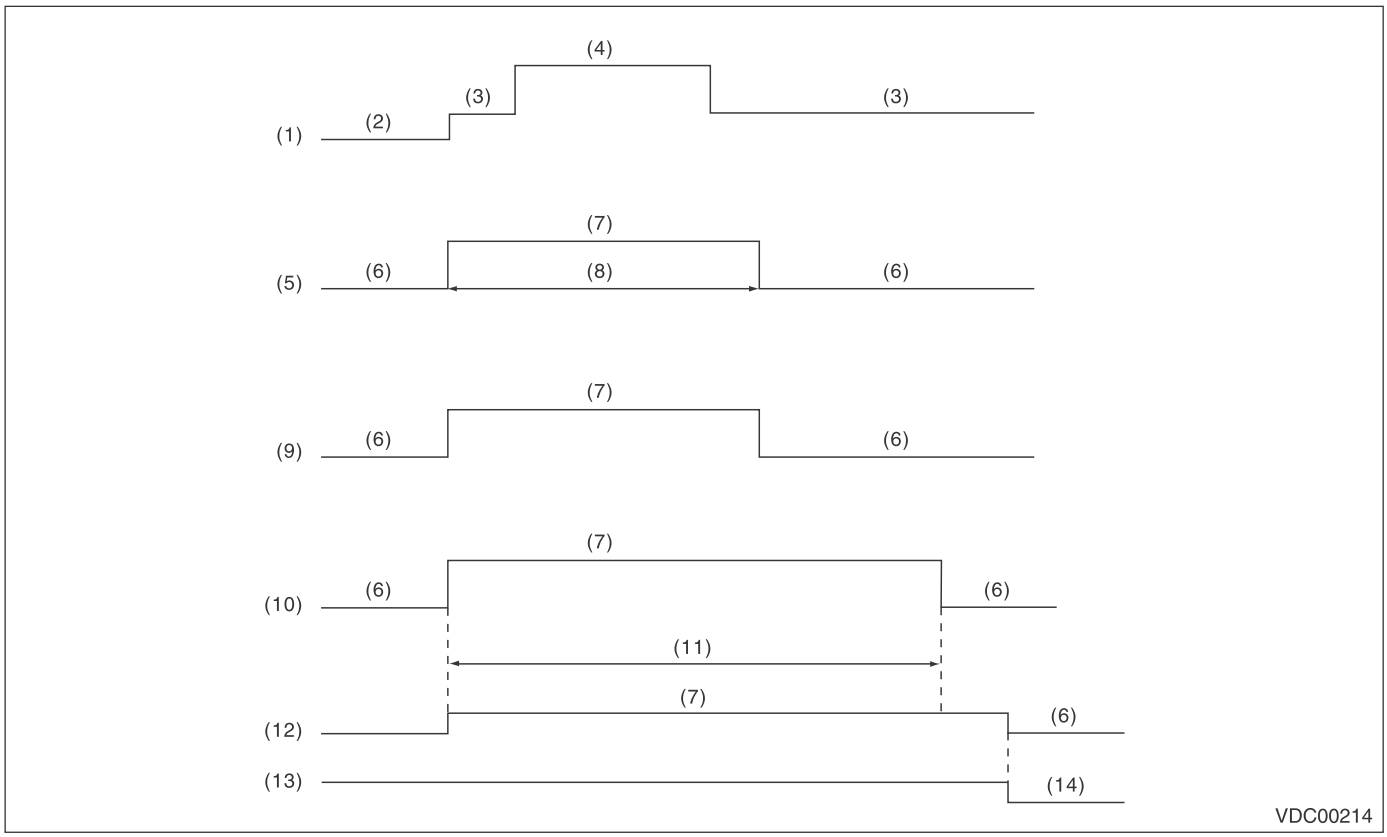

(1)	Ignition switch	(6)	Light OFF	(11)	Several seconds (depending on engine coolant temperature)
(2)	OFF	(7)	Light ON	(12)	Brake warning light (EBD warning light)
(3)	ON	(8)	2 sec.	(13)	Parking brake
(4)	Engine start	(9)	VDC OFF indicator light	(14)	Released
(5)	ABS warning light	(10)	VDC warning light & VDC indicator light		

1) When warning lights or indicator lights do not illuminate in accordance with this illumination pattern, there must be an electrical malfunction.
2) When warning lights or indicator lights remain constantly OFF, check the combination meter circuit or CAN communication circuit. <Ref. to VDC(diag)-28, ABS WARNING LIGHT, VDC OFF INDICATOR LIGHT, VDC WARNING LIGHT AND VDC INDICATOR LIGHT DO NOT COME ON, Warning Light Illumination Pattern.>
3) When the ABS warning light, VDC OFF indicator light, and VDC warning light & VDC indicator light do not go off, check the combination meter circuit or CAN communication circuit. <Ref. to VDC(diag)-29, ABS WARNING LIGHT DOES NOT GO OFF, Warning Light Illumination Pattern.> <Ref. to VDC(diag)-31, VDC OFF INDICATOR LIGHT DOES NOT GO OFF, Warning Light Illumination Pattern.> <Ref. to VDC(diag)-30, VDC WARNING LIGHT AND VDC INDICATOR LIGHT DO NOT GO OFF, Warning Light Illumination Pattern.>
4) When the brake warning light blinks and the hill hold indicator light illumination is faulty, check the parking brake system. <Ref. to PB(diag)-2, Basic Diagnostic Procedure.>

NOTE:
• Even though the ABS warning light, and the VDC warning light & VDC indicator light do not go off in 2 seconds after illuminating, the ABS and VDC functions are normal if the warning lights go off while the vehicle is driven at approximately 12 km/h (7 MPH). However, while these lights are on, the functions with their warning lights illuminated do not operate.
• It may take several minutes before the VDC warning light & VDC indicator light goes off, if the vehicle is parked under low temperature for a specified time. This is not defective because it is resulted from low engine coolant temperature. If DTC is recorded at this time, perform the Clear Memory Mode.
• With the vehicle jack-up/lift-up or set on free rollers, when the wheels lock or spin after starting the engine, ABS warning light, and VDC warning light & VDC indicator light may illuminate because VDC-CM&H/U detects the abnormal conditions from ABS wheel speed sensors. In this case, this is not a malfunction. Perform the Clear Memory Mode.

B: ABS WARNING LIGHT, VDC OFF INDICATOR LIGHT, VDC WARNING LIGHT AND VDC INDICATOR LIGHT DO NOT COME ON

DETECTING CONDITION:

- Defective combination meter
- Defective CAN communication

TROUBLE SYMPTOM:

When the ignition switch is turned to ON (engine OFF), ABS warning light, VDC OFF indicator light, and VDC warning light & VDC indicator light do not illuminate.

NOTE:
When pressing the VDC OFF switch for 10 seconds or more, the VDC OFF indicator light goes off and cannot operate any more. When turning the ignition switch from OFF to ON, the OFF operation enabled status is restored.

	Step	Check	Yes	No
1	**CHECK OTHER INDICATOR LIGHT.** Turn the ignition switch to ON.	Does other indicator light illuminate soon after "ON"?	Go to step **2**.	Perform the self-diagnosis of combination meter. <Ref. to IDI-6, SELF-DIAGNOSIS DISPLAY MODE, OPERATION, Combination Meter System.>
2	**CHECK LAN SYSTEM.** Perform the diagnosis for LAN system. <Ref. to LAN(diag)-10, OPERATION, Read Diagnostic Trouble Code (DTC).>	Is there any fault in LAN system?	Perform the diagnosis according to DTC for LAN system. <Ref. to LAN(diag)-31, List of Diagnostic Trouble Code (DTC).>	Go to step **3**.
3	**CHECK VDCCM.** When the engine does not start, display the current data of VDCCM using Subaru Select Monitor.	Is "EBD Warning Light" output set to ON?	Go to step **4**.	Replace the VDCCM&H/U. <Ref. to VDC-7, VDC Control Module and Hydraulic Control Unit (VDCCM&H/U).>
4	**CHECK VDCCM.** When the engine does not start, display the current data of VDCCM using Subaru Select Monitor.	Is "ABS Warning Light" output set to ON?	Go to step **5**.	Replace the VDCCM&H/U. <Ref. to VDC-7, VDC Control Module and Hydraulic Control Unit (VDCCM&H/U).>
5	**CHECK VDCCM.** When the engine does not start, display the current data of VDCCM using Subaru Select Monitor.	Is "VDC Warning Light" output set to ON?	Go to step **6**.	Replace the VDCCM&H/U. <Ref. to VDC-7, VDC Control Module and Hydraulic Control Unit (VDCCM&H/U).>
6	**CHECK COMBINATION METER.** Check the combination meter. <Ref. to IDI-6, SELF-DIAGNOSIS DISPLAY MODE, OPERATION, Combination Meter System.>	Is combination meter OK?	Replace the VDCCM&H/U. <Ref. to VDC-7, VDC Control Module and Hydraulic Control Unit (VDCCM&H/U).>	Replace the combination meter. <Ref. to IDI-20, REMOVAL, Combination Meter.>

C: ABS WARNING LIGHT DOES NOT GO OFF

DETECTING CONDITION:

- Defective combination meter
- Defective CAN communication

TROUBLE SYMPTOM:

When starting the engine, the ABS warning light is kept ON.

	Step	Check	Yes	No
1	**READ DTC.** Read the DTC. <Ref. to VDC(diag)-23, Read Diagnostic Trouble Code (DTC).>	Is DTC displayed?	Perform the diagnosis according to DTC. <Ref. to VDC(diag)-35, List of Diagnostic Trouble Code (DTC).>	Go to step **2**.
2	**CHECK LAN SYSTEM.** Perform the diagnosis for LAN system. <Ref. to LAN(diag)-10, OPERATION, Read Diagnostic Trouble Code (DTC).>	Is there any fault in LAN system?	Perform the diagnosis according to DTC for LAN system. <Ref. to LAN(diag)-31, List of Diagnostic Trouble Code (DTC).>	Go to step **3**.
3	**CHECK COMBINATION METER.** Check the combination meter. <Ref. to IDI-6, SELF-DIAGNOSIS DISPLAY MODE, OPERATION, Combination Meter System.>	Is combination meter OK?	Replace the VDCCM&H/U. <Ref. to VDC-7, VDC Control Module and Hydraulic Control Unit (VDCCM&H/U).>	Replace the combination meter. <Ref. to IDI-20, REMOVAL, Combination Meter.>

D: VDC WARNING LIGHT AND VDC INDICATOR LIGHT DO NOT GO OFF

DETECTING CONDITION:

- Defective combination meter
- Defective engine
- Defective CAN communication

TROUBLE SYMPTOM:

When starting the engine, the VDC warning light & VDC indicator light remains lit.

	Step	Check	Yes	No
1	**READ DTC.** Read the DTC. <Ref. to VDC(diag)-23, Read Diagnostic Trouble Code (DTC).>	Is DTC displayed?	Perform the diagnosis according to DTC. <Ref. to VDC(diag)-35, List of Diagnostic Trouble Code (DTC).>	Go to step **2**.
2	**CHECK ENGINE.**	Does the malfunction indicator light illuminate?	Repair the engine. <Ref. to EN(H4SO)(diag)-41, Read Diagnostic Trouble Code (DTC).> <Ref. to EN(H4DOTC)(diag)-43, Read Diagnostic Trouble Code (DTC).> <Ref. to EN(H6DO)(diag)-44, Read Diagnostic Trouble Code (DTC).>	Go to step **3**.
3	**CHECK ENGINE COOLANT TEMPERATURE.** Warm up the engine, and check if the VDC warning light & VDC indicator light illumination condition changes.	When the engine coolant temperature is too low, the VDC warning light & VDC indicator light illuminates. Do the lights go off when the engine is warmed up?	Normal operation. If DTC is recorded, clear the memory. <Ref. to VDC(diag)-25, Clear Memory Mode.>	Go to step **4**.
4	**CHECK LAN SYSTEM.** Perform the diagnosis for LAN system. <Ref. to LAN(diag)-10, OPERATION, Read Diagnostic Trouble Code (DTC).>	Is there any fault in LAN system?	Perform the diagnosis according to DTC for LAN system. <Ref. to LAN(diag)-31, List of Diagnostic Trouble Code (DTC).>	Go to step **5**.
5	**CHECK COMBINATION METER.** Check the combination meter. <Ref. to IDI-6, SELF-DIAGNOSIS DISPLAY MODE, OPERATION, Combination Meter System.>	Is combination meter OK?	Replace the VDCCM&H/U. <Ref. to VDC-7, VDC Control Module and Hydraulic Control Unit (VDCCM&H/U).>	Replace the combination meter. <Ref. to IDI-20, REMOVAL, Combination Meter.>

E: VDC OFF INDICATOR LIGHT DOES NOT GO OFF

DETECTING CONDITION:

- Defective combination meter
- Defective CAN communication
- VDC OFF switch is shorted.

TROUBLE SYMPTOM:

When starting the engine, VDC OFF indicator light is kept ON.

NOTE:

When pressing the VDC OFF switch for 10 seconds or more, the VDC OFF indicator light goes off and cannot operate any more. When turning the ignition switch from OFF to ON, the OFF operation enabled status is restored.

	Step	Check	Yes	No
1	**READ DTC.** Read the DTC. <Ref. to VDC(diag)-23, Read Diagnostic Trouble Code (DTC).>	Is DTC displayed?	Perform the diagnosis according to DTC. <Ref. to VDC(diag)-35, List of Diagnostic Trouble Code (DTC).>	Go to step **2**.
2	**CHECK VDC OFF SWITCH.** Remove and check VDC OFF switch. <Ref. to VDC-25, VDC OFF Switch.>	Is the VDC OFF switch normal?	Go to step **3**.	Replace the VDC OFF switch.
3	**CHECK LAN SYSTEM.** Perform the diagnosis for LAN system. <Ref. to LAN(diag)-10, OPERATION, Read Diagnostic Trouble Code (DTC).>	Is there any fault in LAN system?	Perform the diagnosis according to DTC for LAN system. <Ref. to LAN(diag)-31, List of Diagnostic Trouble Code (DTC).>	Go to step **4**.
4	**CHECK COMBINATION METER.** Check the combination meter. <Ref. to IDI-6, SELF-DIAGNOSIS DISPLAY MODE, OPERATION, Combination Meter System.>	Is combination meter OK?	Replace the VDCCM&H/U. <Ref. to VDC-7, VDC Control Module and Hydraulic Control Unit (VDCCM&H/U).>	Replace the combination meter. <Ref. to IDI-20, REMOVAL, Combination Meter.>

F: BRAKE WARNING LIGHT DOES NOT GO OFF

DETECTING CONDITION:

- Brake warning light circuit is shorted.
- Defective sensor/connector

TROUBLE SYMPTOM:

After starting the engine, the brake warning light remains lit though the parking lever is released.

NOTE:
When brake warning light blinks, check the parking brake system. <Ref. to PB(diag)-2, Basic Diagnostic Procedure.>

WIRING DIAGRAM:

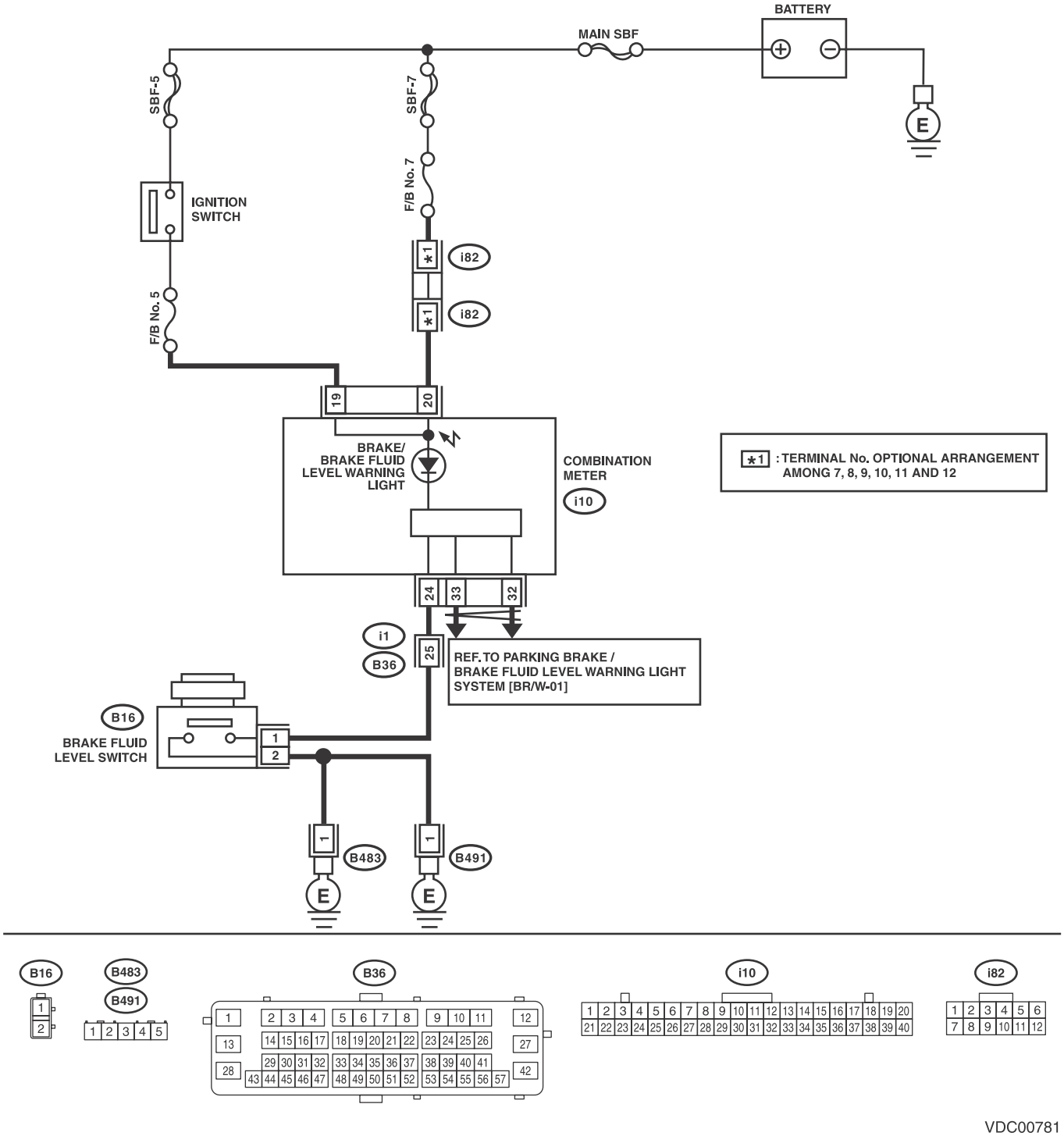

VDC00781

Step		Check	Yes	No
1	**CHECK INSTALLATION OF VDCCM&H/U CONNECTOR.** 1) Turn the ignition switch to OFF. 2) Check that the VDCCM&H/U connector is inserted until it is locked by clamp.	Is the connector firmly inserted?	Go to step **2**.	Insert the VDCCM&H/U connector until it is locked by clamp.

Step		Check	Yes	No
2	**READ DTC.** Read the DTC. <Ref. to VDC(diag)-23, Read Diagnostic Trouble Code (DTC).>	Is DTC displayed?	Perform the diagnosis according to DTC. <Ref. to VDC(diag)-35, List of Diagnostic Trouble Code (DTC).>	Go to step **3**.
3	**CHECK BRAKE FLUID AMOUNT.** Check the amount of brake fluid in the reservoir tank of master cylinder.	Is the amount of brake fluid between the lines of “MAX” and “MIN”?	Go to step **4**.	Replenish brake fluid to the specified value.
4	**CHECK BRAKE FLUID LEVEL SWITCH.** 1) Turn the ignition switch to OFF. 2) Disconnect the level switch connector (B16) from master cylinder. 3) Measure the resistance of master cylinder terminals. ***Terminals*** ***No. 1 — No. 2:***	Is the resistance 1 MΩ or more?	Go to step **5**.	Replace the master cylinder. <Ref. to BR-27, Master Cylinder.>
5	**CHECK GROUND SHORT OF HARNESS.** 1) Disconnect the connector from the combination meter. 2) Measure the resistance between combination meter connector and chassis ground. ***Connector & terminal*** ***(i10) No. 24 — Chassis ground:***	Is the resistance 1 MΩ or more?	Go to step **6**.	Repair the harness connector between combination meter and brake fluid level switch.
6	**CHECK LAN SYSTEM.** Perform the diagnosis for LAN system. <Ref. to LAN(diag)-10, OPERATION, Read Diagnostic Trouble Code (DTC).>	Is there any fault in LAN system?	Perform the diagnosis according to DTC for LAN system. <Ref. to LAN(diag)-31, List of Diagnostic Trouble Code (DTC).>	Go to step **7**.
7	**CHECK COMBINATION METER.** Check the combination meter. <Ref. to IDI-6, SELF-DIAGNOSIS DISPLAY MODE, OPERATION, Combination Meter System.>	Is combination meter OK?	Perform the diagnosis for the parking brake system. <Ref. to PB(diag)-22, Read Diagnostic Trouble Code (DTC).>	Replace the combination meter. <Ref. to IDI-20, REMOVAL, Combination Meter.>

11.List of Diagnostic Trouble Code (DTC)

A: LIST

DTC	Detailed code	Display	Content of diagnosis	Reference
C0021	5045	Front Right ABS Sensor Circuit Open or Shorted Battery	Open/high input of front ABS wheel speed sensor RH	<Ref. to VDC(diag)-39, DTC C0021 FRONT RIGHT ABS SENSOR CIRCUIT OPEN OR SHORT, Diagnostic Procedure with Diagnostic Trouble Code (DTC).>
C0022	5049 5053 5057 5061 5065	Front Right ABS Sensor Signal	Front ABS wheel speed sensor RH signal malfunction	<Ref. to VDC(diag)-42, DTC C0022 FRONT RIGHT ABS SENSOR SIGNAL, Diagnostic Procedure with Diagnostic Trouble Code (DTC).>
C0023	5044	Front Left ABS Sensor Circuit Open or Shorted Battery	Open/high input of front ABS wheel speed sensor LH	<Ref. to VDC(diag)-39, DTC C0023 FRONT LEFT ABS SENSOR CIRCUIT OPEN OR SHORT, Diagnostic Procedure with Diagnostic Trouble Code (DTC).>
C0024	5048 5052 5056 5060 5064	Front Left ABS Sensor Signal	Front ABS wheel speed sensor LH signal malfunction	<Ref. to VDC(diag)-42, DTC C0024 FRONT LEFT ABS SENSOR SIGNAL, Diagnostic Procedure with Diagnostic Trouble Code (DTC).>
C0025	5047	Rear Righ ABS Sensor Circuit Open or Shorted Battery	Open/high input of rear ABS wheel speed sensor RH	<Ref. to VDC(diag)-39, DTC C0025 REAR RIGHT ABS SENSOR CIRCUIT OPEN OR SHORT, Diagnostic Procedure with Diagnostic Trouble Code (DTC).>
C0026	5051 5055 5059 5063 5067	Rear Right ABS Sensor Signal	Rear ABS wheel speed sensor RH signal malfunction	<Ref. to VDC(diag)-42, DTC C0026 REAR RIGHT ABS SENSOR SIGNAL, Diagnostic Procedure with Diagnostic Trouble Code (DTC).>
C0027	5046	Rear Left ABS Sensor Circuit Open or Shorted Battery	Open/high input of rear ABS wheel speed sensor LH	<Ref. to VDC(diag)-40, DTC C0027 REAR LEFT ABS SENSOR CIRCUIT OPEN OR SHORT, Diagnostic Procedure with Diagnostic Trouble Code (DTC).>
C0028	5050 5054 5058 5062 5066	Rear Left ABS Sensor Signal	Rear ABS wheel speed sensor LH signal malfunction	<Ref. to VDC(diag)-43, DTC C0028 REAR LEFT ABS SENSOR SIGNAL, Diagnostic Procedure with Diagnostic Trouble Code (DTC).>
C0031	5019	FR Hold Valve malfunction	Front inlet solenoid valve RH malfunction in VDCCM&H/U	<Ref. to VDC(diag)-45, DTC C0031 FR HOLD VALVE MALFUNCTION, Diagnostic Procedure with Diagnostic Trouble Code (DTC).>
C0032	5023	FR Pressure Reducing Valve malfunction	Front outlet solenoid valve RH malfunction in VDCCM&H/U	<Ref. to VDC(diag)-45, DTC C0032 FR PRESSURE REDUCING VALVE MALFUNCTION, Diagnostic Procedure with Diagnostic Trouble Code (DTC).>
C0033	5018	FL Hold Valve malfunction	Front inlet solenoid valve LH malfunction in VDCCM&H/U	<Ref. to VDC(diag)-46, DTC C0033 FL HOLD VALVE MALFUNCTION, Diagnostic Procedure with Diagnostic Trouble Code (DTC).>
C0034	5022	FL Pressure Reducing Valve malfunction	Front outlet solenoid valve LH malfunction in VDCCM&H/U	<Ref. to VDC(diag)-46, DTC C0034 FL PRESSURE REDUCING VALVE MALFUNCTION, Diagnostic Procedure with Diagnostic Trouble Code (DTC).>
C0035	5021	RR Hold Valve malfunction	Rear inlet solenoid valve RH malfunction in VDCCM&H/U	<Ref. to VDC(diag)-46, DTC C0035 RR HOLD VALVE MALFUNCTION, Diagnostic Procedure with Diagnostic Trouble Code (DTC).>

DTC	Detailed code	Display	Content of diagnosis	Reference
C0036	5025	RR Pressure Reducing Valve malfunction	Rear outlet solenoid valve RH malfunction in VDCCM&H/U	<Ref. to VDC(diag)-46, DTC C0036 RR PRESSURE REDUCING VALVE MALFUNCTION, Diagnostic Procedure with Diagnostic Trouble Code (DTC).>
C0037	5020	RL Hold Valve malfunction	Rear inlet solenoid valve LH malfunction in VDCCM&H/U	<Ref. to VDC(diag)-46, DTC C0037 RL HOLD VALVE MALFUNCTION, Diagnostic Procedure with Diagnostic Trouble Code (DTC).>
C0038	5024	RL Pressure Reducing Valve malfunction	Rear outlet solenoid valve LH malfunction in VDCCM&H/U	<Ref. to VDC(diag)-46, DTC C0038 RL PRESSURE REDUCING VALVE MALFUNCTION, Diagnostic Procedure with Diagnostic Trouble Code (DTC).>
C0041	5002 5003 5004 5005 5006 5007 5008 5009 5010 5011 5012 5013 5014 5015 5037 5038 5040 5041 5068 5069 5134	Electrical Control Module	VDC control module malfunction	<Ref. to VDC(diag)-49, DTC C0041 ECM, Diagnostic Procedure with Diagnostic Trouble Code (DTC).>
	5148 5149	Parameter selection error	VDC control module parameter selection failure	<Ref. to VDC(diag)-51, DTC C0041 PARAMETER SELECTION ERROR, Diagnostic Procedure with Diagnostic Trouble Code (DTC).>
C0042	5000 5001	Power Supply Voltage Failure	Power voltage malfunction	<Ref. to VDC(diag)-52, DTC C0042 POWER SUPPLY VOLTAGE FAILURE, Diagnostic Procedure with Diagnostic Trouble Code (DTC).>
C0044	5137 5140 5142	TCM Communication Circuit	CAN communication failure of transmission control module	<Ref. to VDC(diag)-54, DTC C0044 TCM COMMUNICATION CIRCUIT, Diagnostic Procedure with Diagnostic Trouble Code (DTC).>
C0045	5144	TCM malfunction	Malfunction of transmission control module	<Ref. to VDC(diag)-55, DTC C0045 TCM MALFUNCTION, Diagnostic Procedure with Diagnostic Trouble Code (DTC).>
	5146	Incorrect VDC Control Module specifications	Different VDC control module specification	<Ref. to VDC(diag)-56, DTC C0045 INCORRECT VDC CONTROL MODULE SPECIFICATIONS, Diagnostic Procedure with Diagnostic Trouble Code (DTC).>
C0046	5155	Body Integrated Module Communication Circuit	Body integrated module communication circuit	<Ref. to VDC(diag)-58, DTC C0046 BODY INTEGRATED MODULE COMMUNICATION CIRCUIT, Diagnostic Procedure with Diagnostic Trouble Code (DTC).>
C0047	5135	Improper CAN Communication	Improper CAN communication	<Ref. to VDC(diag)-59, DTC C0047 CAN COMMUNICATION, Diagnostic Procedure with Diagnostic Trouble Code (DTC).>

DTC	Detailed code	Display	Content of diagnosis	Reference
C0048	5156	Parking Brake System Communication Circuit	Parking brake system communication circuit	<Ref. to VDC(diag)-61, DTC C0048 PARKING BRAKE SYSTEM COMMUNICATION CIRCUIT, Diagnostic Procedure with Diagnostic Trouble Code (DTC).>
C0051	5016 5017 5034 5036	Valve Relay	Valve Relay	<Ref. to VDC(diag)-62, DTC C0051 VALVE RELAY, Diagnostic Procedure with Diagnostic Trouble Code (DTC).>
C0052	5039 5042 5043 5154	Motor malfunction	Motor	<Ref. to VDC(diag)-64, DTC C0052 MOTOR MALFUNCTION, Diagnostic Procedure with Diagnostic Trouble Code (DTC).>
C0054	5133	BLS OFF Malfunction	BLS OFF Malfunction	<Ref. to VDC(diag)-67, DTC C0054 BLS OFF MALFUNCTION, Diagnostic Procedure with Diagnostic Trouble Code (DTC).>
	5153	BLS ON malfunction	BLS ON malfunction	<Ref. to VDC(diag)-69, DTC C0054 BLS ON MALFUNCTION, Diagnostic Procedure with Diagnostic Trouble Code (DTC).>
C0056	5102 5108	G Sensor Failure	G sensor failure	<Ref. to VDC(diag)-70, DTC C0056 G SENSOR FAILURE, Diagnostic Procedure with Diagnostic Trouble Code (DTC).>
	5103 5104 5105 5106 5107 5109	G Sensor Signal	G sensor signal	<Ref. to VDC(diag)-71, DTC C0056 G SENSOR SIGNAL, Diagnostic Procedure with Diagnostic Trouble Code (DTC).>
C0057	5136 5139 5141	ECM Communication Circuit	CAN communication failure of engine control module	<Ref. to VDC(diag)-73, DTC C0057 ECM COMMUNICATION CIRCUIT, Diagnostic Procedure with Diagnostic Trouble Code (DTC).>
	5143	ECM Control System	Coordinate control prohibition of engine control module	<Ref. to VDC(diag)-74, DTC C0057 ECM CONTROL SYSTEM, Diagnostic Procedure with Diagnostic Trouble Code (DTC).>
	5145	VDC interupted due to EGI reason	VDC interrupted due to EGI reason	<Ref. to VDC(diag)-75, DTC C0057 VDC INTERUPTED DUE TO EGI REASON, Diagnostic Procedure with Diagnostic Trouble Code (DTC).>
C0061	5027	Normal Opening Valve 1 malfunction	Secondary cut valve malfunction in VDCCM&H/U	<Ref. to VDC(diag)-46, DTC C0061 NORMAL OPENING VALVE 1 MALFUNCTION, Diagnostic Procedure with Diagnostic Trouble Code (DTC).>
C0062	5026	Normal Opening Valve 2 malfunction	Primary cut valve malfunction in VDCCM&H/U	<Ref. to VDC(diag)-46, DTC C0062 NORMAL OPENING VALVE 2 MALFUNCTION, Diagnostic Procedure with Diagnostic Trouble Code (DTC).>
C0063	5029	Normal Closing Valve 1 malfunction	Secondary suction valve malfunction in VDCCM&H/U	<Ref. to VDC(diag)-46, DTC C0063 NORMAL CLOSING VALVE 1 MALFUNCTION, Diagnostic Procedure with Diagnostic Trouble Code (DTC).>
C0064	5028	Normal Closing Valve 2 malfunction	Primary suction valve malfunction in VDCCM&H/U	<Ref. to VDC(diag)-47, DTC C0064 NORMAL CLOSING VALVE 2 MALFUNCTION, Diagnostic Procedure with Diagnostic Trouble Code (DTC).>

DTC	Detailed code	Display	Content of diagnosis	Reference
C0071	5121 5122 5123 5138	No signal from Steering Angle Sensor	Steering angle sensor communication	<Ref. to VDC(diag)-76, DTC C0071 NO SIGNAL FROM STEERING ANGLE SENSOR, Diagnostic Procedure with Diagnostic Trouble Code (DTC).>
	5124 5125 5126 5127 5128 5129 5132	Steering Angle Sensor Op	Steering angle sensor output	<Ref. to VDC(diag)-78, DTC C0071 STEER ANGLE SENSOR OP, Diagnostic Procedure with Diagnostic Trouble Code (DTC).>
C0072	5116 5117 5118 5119 5120 5131	Yaw Rate Sensor Output	Yaw rate sensor output	<Ref. to VDC(diag)-81, DTC C0072 ABNORMAL YAW RATE SENSOR OUTPUT, Diagnostic Procedure with Diagnostic Trouble Code (DTC).>
C0073	5110 5114	Voltage inputted to Lateral G Sensor exceeds specification	Lateral G sensor power supply/output	<Ref. to VDC(diag)-82, DTC C0073 LATERAL G SENSOR POWER/OUTPUT, Diagnostic Procedure with Diagnostic Trouble Code (DTC).>
	5111 5112 5113 5115 5130	Lateral G sensor Output	Lateral G sensor output	<Ref. to VDC(diag)-83, DTC C0073 ABNORMAL LATERAL G SENSOR OUTPUT, Diagnostic Procedure with Diagnostic Trouble Code (DTC).>
C0074	5070 5071 5072 5073 5074 5075 5076 5077 5078 5079	Master Cylinder Pressure Sensor Output	Master cylinder pressure sensor output	<Ref. to VDC(diag)-86, DTC C0074 MASTER CYLINDER PRESSURE SENSOR OUTPUT, Diagnostic Procedure with Diagnostic Trouble Code (DTC).>
C0075	5080 5081 5082 5083 5084 5086 5087 5088 5089 5090 5091 5092 5093 5094 5095 5097 5098 5099 5100 5101	Wheel Cylinder Pressure Sensor Output	Wheel cylinder pressure sensor output	<Ref. to VDC(diag)-86, DTC C0075 WHEEL CYLINDER PRESSURE SENSOR OUTPUT, Diagnostic Procedure with Diagnostic Trouble Code (DTC).>
C0081	5147	System Failure	System malfunction	<Ref. to VDC(diag)-87, DTC C0081 SYSTEM FAILURE, Diagnostic Procedure with Diagnostic Trouble Code (DTC).>

12. Diagnostic Procedure with Diagnostic Trouble Code (DTC)

A: DTC C0021 FRONT RIGHT ABS SENSOR CIRCUIT OPEN OR SHORT

NOTE:
For the diagnostic procedure, refer to DTC C0027 “RL WHEEL SPEED SENSOR CIRCUIT OPEN/HIGH INPUT”. <Ref. to VDC(diag)-40, DTC C0027 REAR LEFT ABS SENSOR CIRCUIT OPEN OR SHORT, Diagnostic Procedure with Diagnostic Trouble Code (DTC).>

B: DTC C0023 FRONT LEFT ABS SENSOR CIRCUIT OPEN OR SHORT

NOTE:
For the diagnostic procedure, refer to DTC C0027 “RL WHEEL SPEED SENSOR CIRCUIT OPEN/HIGH INPUT”. <Ref. to VDC(diag)-40, DTC C0027 REAR LEFT ABS SENSOR CIRCUIT OPEN OR SHORT, Diagnostic Procedure with Diagnostic Trouble Code (DTC).>

C: DTC C0025 REAR RIGHT ABS SENSOR CIRCUIT OPEN OR SHORT

NOTE:
For the diagnostic procedure, refer to DTC C0027 “RL WHEEL SPEED SENSOR CIRCUIT OPEN/HIGH INPUT”. <Ref. to VDC(diag)-40, DTC C0027 REAR LEFT ABS SENSOR CIRCUIT OPEN OR SHORT, Diagnostic Procedure with Diagnostic Trouble Code (DTC).>

D: DTC C0027 REAR LEFT ABS SENSOR CIRCUIT OPEN OR SHORT

DTC DETECTING CONDITION:

- Defective ABS wheel speed sensor (broken wire, input voltage too high)
- Defective harness connector

TROUBLE SYMPTOM:

- ABS does not operate.
- VDC does not operate.
- Hill start assist does not operate.

WIRING DIAGRAM:

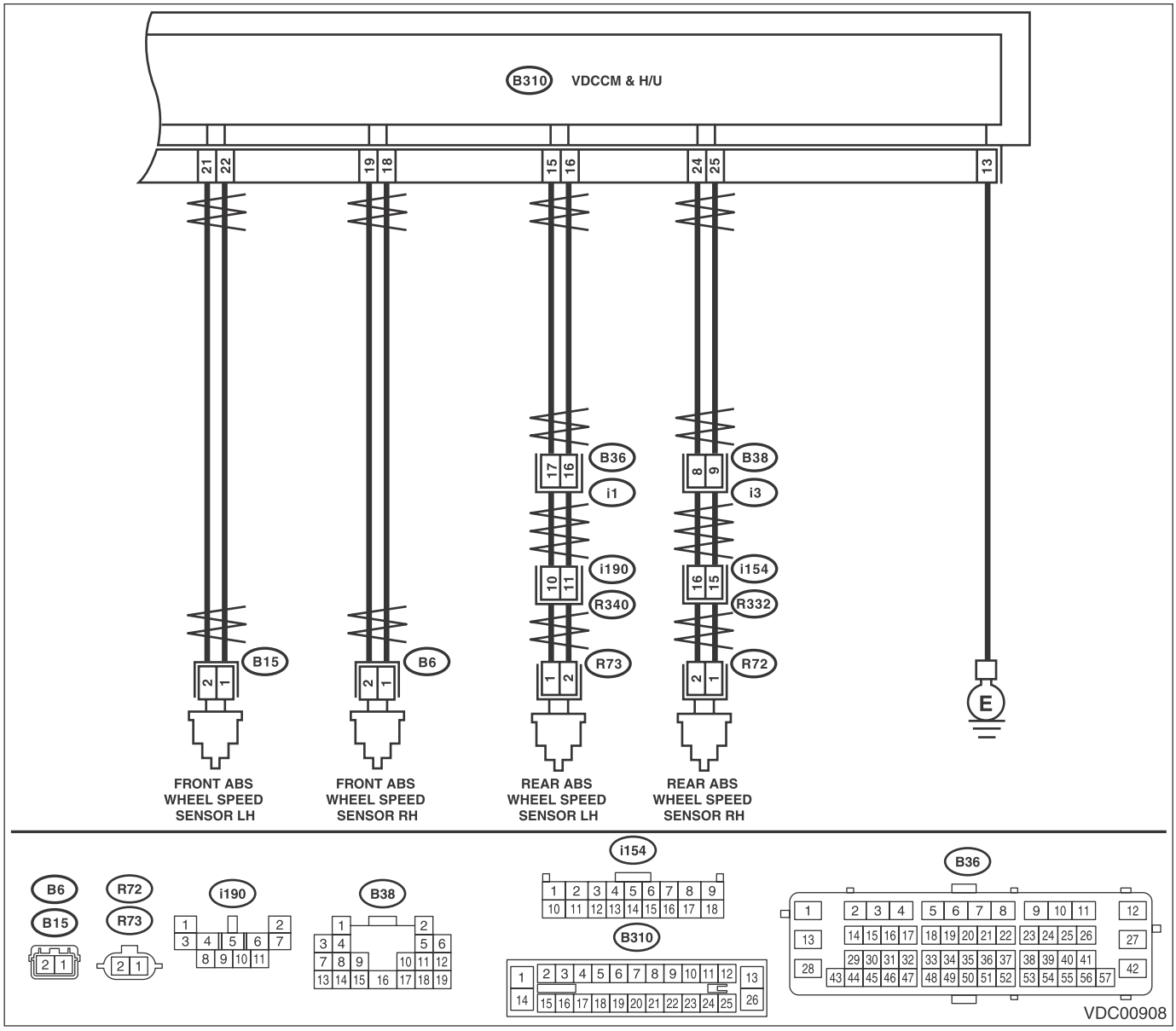

Step		Check	Yes	No
1	**CHECK POOR CONTACT OF CONNECTOR.** Check if there is poor contact between VDCCM&H/U and ABS wheel speed sensor.	Is there poor contact?	Repair the connector.	Go to step **2**.

	Step	Check	Yes	No
2	**CHECK HARNESS CONNECTOR BETWEEN VDCCM&H/U AND ABS WHEEL SPEED SENSOR.** 1) Disconnect the connector (B310) from the VDCCM&H/U. 2) Disconnect the connector from ABS wheel speed sensor. 3) Measure the resistance between VDCCM&H/U connector and ABS wheel speed sensor connector. ***Connector & terminal*** ***DTC C0021*** ***(B310) No. 18 — (B6) No. 1:*** ***(B310) No. 19 — (B6) No. 2:*** ***DTC C0023*** ***(B310) No. 22 — (B15) No. 1:*** ***(B310) No. 21 — (B15) No. 2:*** ***DTC C0025*** ***(B310) No. 25 — (R72) No. 1:*** ***(B310) No. 24 — (R72) No. 2:*** ***DTC C0027*** ***(B310) No. 15 — (R73) No. 1:*** ***(B310) No. 16 — (R73) No. 2:***	Is the resistance less than 1 Ω?	Go to step **3**.	Repair the harness connector between VDCCM&H/U and ABS wheel speed sensor.
3	**CHECK GROUND SHORT OF HARNESS.** Measure the resistance between VDCCM&H/U connector and chassis ground. ***Connector & terminal*** ***DTC C0021*** ***(B310) No. 19 — Chassis ground:*** ***DTC C0023*** ***(B310) No. 21 — Chassis ground:*** ***DTC C0025*** ***(B310) No. 25 — Chassis ground:*** ***DTC C0027*** ***(B310) No. 15 — Chassis ground:***	Is the resistance 1 MΩ or more?	Go to step **4**.	Repair the harness connector between VDCCM&H/U and ABS wheel speed sensor.
4	**CHECK ABS WHEEL SPEED SENSOR POWER SUPPLY CIRCUIT.** 1) Connect the VDCCM&H/U connector. 2) Turn the ignition switch to ON. 3) Measure the voltage between ABS wheel speed sensor connector and chassis ground. ***Connector & terminal*** ***DTC C0021*** ***(B6) No. 1 (+) — Chassis ground (–):*** ***DTC C0023*** ***(B15) No. 1 (+) — Chassis ground (–):*** ***DTC C0025*** ***(R72) No. 2 (+) — Chassis ground (–):*** ***DTC C0027*** ***(R73) No. 2 (+) — Chassis ground (–):***	Is the voltage 5 — 16 V?	Go to step **6**.	Go to step **5**.

	Step	Check	Yes	No
5	**CHECK VDCCM&H/U POWER SUPPLY CIRCUIT.** 1) Turn the ignition switch to OFF. 2) Disconnect the VDCCM&H/U connector. 3) Turn the ignition switch to ON. 4) Measure the voltage between VDCCM&H/U connector terminals. ***Connector & terminal*** ***(B310) No. 7 (+) — (B310) No. 13 (–):*** ***(B310) No. 14 (+) — (B310) No. 13 (–):*** ***(B310) No. 1 (+) — (B310) No. 13 (–):***	Is the voltage 10 — 15 V?	Go to step **6**.	Check the generator, battery and VDCCM&H/U power supply circuit.
6	**CHECK ABS WHEEL SPEED SENSOR SIGNAL.** 1) Install the ABS wheel speed sensor. 2) Prepare an oscilloscope. 3) Check the ABS wheel speed sensor. <Ref. to VDC-20, ABS WHEEL SPEED SENSOR, INSPECTION, Front ABS Wheel Speed Sensor.>	Does the oscilloscope indicate the waveform pattern as shown in the figure?	Go to step **7**.	Replace the ABS wheel speed sensor. <Ref. to VDC-20, Front ABS Wheel Speed Sensor.>
7	**CHECK VDCCM&H/U.** 1) Connect all connectors. 2) Clear the memory. <Ref. to VDC(diag)-25, Clear Memory Mode.> 3) Perform the Inspection Mode. <Ref. to VDC(diag)-24, Inspection Mode.> 4) Read the DTC.	Is the same DTC displayed?	Replace the VDCCM&H/U. <Ref. to VDC-7, VDC Control Module and Hydraulic Control Unit (VDCCM&H/U).>	Go to step **8**.
8	**CHECK OTHER DTC DETECTION.**	Is any other DTC displayed?	Perform the diagnosis according to DTC. <Ref. to VDC(diag)-35, List of Diagnostic Trouble Code (DTC).>	It results from a temporary noise interference.

E: DTC C0022 FRONT RIGHT ABS SENSOR SIGNAL

NOTE:
For the diagnostic procedure, refer to DTC C0028 “RL WHEEL SPEED SENSOR SIGNAL”. <Ref. to VDC(diag)-43, DTC C0028 REAR LEFT ABS SENSOR SIGNAL, Diagnostic Procedure with Diagnostic Trouble Code (DTC).>

F: DTC C0024 FRONT LEFT ABS SENSOR SIGNAL

NOTE:
For the diagnostic procedure, refer to DTC C0028 “RL WHEEL SPEED SENSOR SIGNAL”. <Ref. to VDC(diag)-43, DTC C0028 REAR LEFT ABS SENSOR SIGNAL, Diagnostic Procedure with Diagnostic Trouble Code (DTC).>

G: DTC C0026 REAR RIGHT ABS SENSOR SIGNAL

NOTE:
For the diagnostic procedure, refer to DTC C0028 “RL WHEEL SPEED SENSOR SIGNAL”. <Ref. to VDC(diag)-43, DTC C0028 REAR LEFT ABS SENSOR SIGNAL, Diagnostic Procedure with Diagnostic Trouble Code (DTC).>

H: DTC C0028 REAR LEFT ABS SENSOR SIGNAL

DTC DETECTING CONDITION:

- Defective ABS wheel speed sensor signal (noise, irregular signal, etc.)
- Defective harness connector

TROUBLE SYMPTOM:

- ABS does not operate.
- VDC does not operate.
- Hill start assist does not operate.

WIRING DIAGRAM:

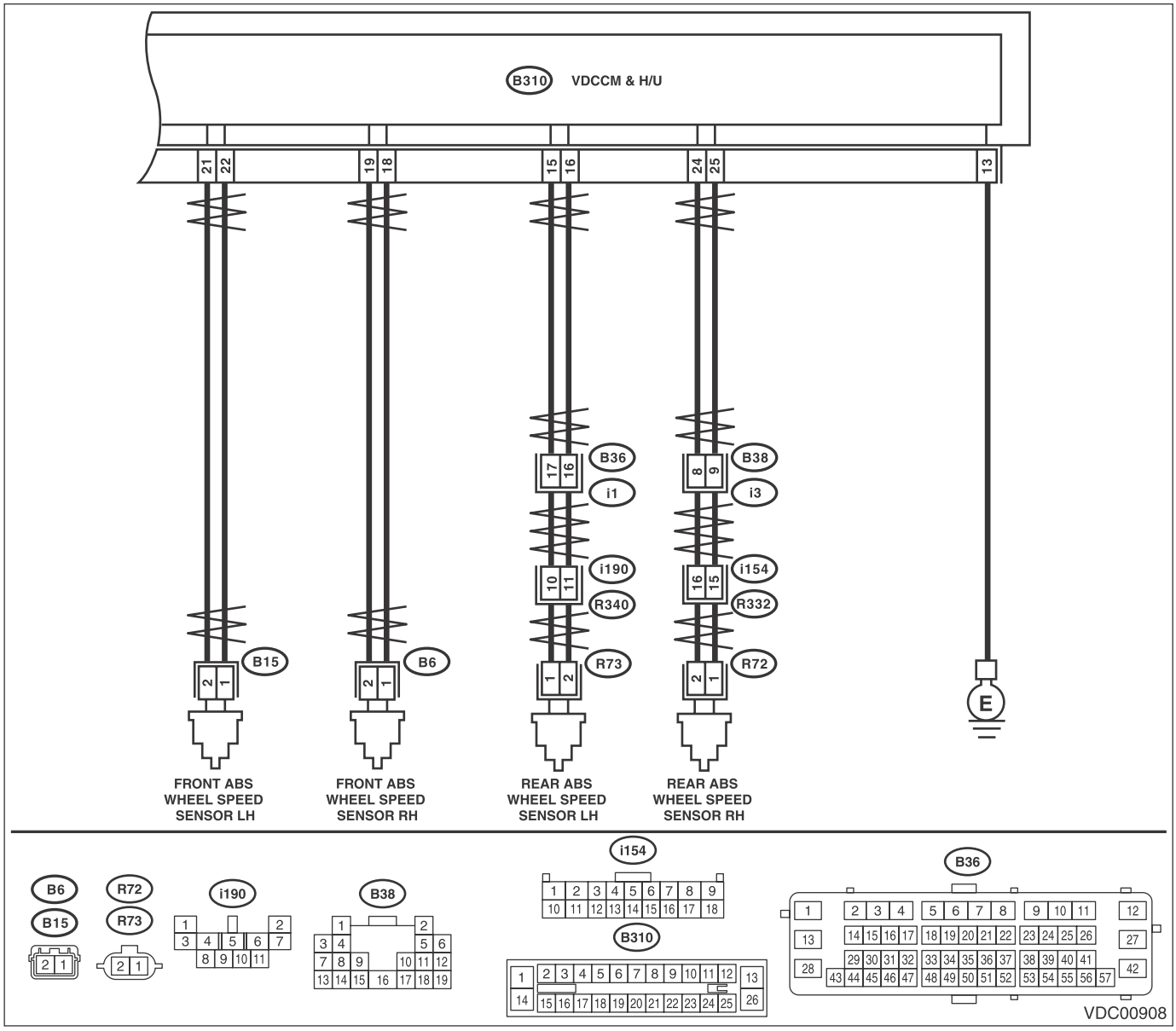

	Step	Check	Yes	No
1	**CHECK OUTPUT OF ABS WHEEL SPEED SENSOR USING SUBARU SELECT MONITOR.** 1) Select “Current Data Display & Save” and “Freeze Frame Data” on the Subaru Select Monitor. 2) Read the defective ABS wheel speed sensor output.	Does the speed indicated on the current data change in response to the speedometer reading during acceleration/deceleration when the steering wheel is in the straight-ahead position? In addition, are the wheel speeds of the freeze frame data for 4 wheels almost the same?	Go to step **2**.	Go to step **7**.
2	**CHECK POOR CONTACT OF CONNECTOR.** Turn the ignition switch to OFF.	Is there poor contact of connectors between VDCCM&H/U and ABS wheel speed sensor?	Repair the connector.	Go to step **3**.
3	**CHECK CAUSE OF SIGNAL NOISE.** Make sure the radio wave devices and electronic components are installed correctly.	Are the radio wave devices and electronic components installed correctly?	Go to step **4**.	Install the radio wave devices and electronic components properly.
4	**CHECK CAUSE OF SIGNAL NOISE.** Check if the noise sources (such as an antenna) are installed near the sensor harness.	Are noise sources installed?	Install the noise sources apart from sensor harness.	Go to step **5**.
5	**CHECK VDCCM&H/U.** 1) Connect all connectors. 2) Clear the memory. <Ref. to VDC(diag)-25, Clear Memory Mode.> 3) Perform the Inspection Mode. <Ref. to VDC(diag)-24, Inspection Mode.> 4) Read the DTC.	Is the same DTC displayed?	Replace the VDCCM&H/U. <Ref. to VDC-7, VDC Control Module and Hydraulic Control Unit (VDCCM&H/U).>	Go to step **6**.
6	**CHECK OTHER DTC DETECTION.**	Is any other DTC displayed?	Perform the diagnosis according to DTC. <Ref. to VDC(diag)-35, List of Diagnostic Trouble Code (DTC).>	It results from a temporary noise interference.
7	**CHECK INSTALLATION OF ABS WHEEL SPEED SENSOR.**	Is the ABS wheel speed sensor installation bolt tightened 7.5 N·m (0.76 kgf-m, 5.5 ft-lb)?	Go to step **8**.	Tighten the ABS wheel speed sensor installation bolts.
8	**CHECK ABS WHEEL SPEED SENSOR SIGNAL.** 1) Install the ABS wheel speed sensor. 2) Prepare an oscilloscope. 3) Check the ABS wheel speed sensor. <Ref. to VDC-20, ABS WHEEL SPEED SENSOR, INSPECTION, Front ABS Wheel Speed Sensor.>	Does the oscilloscope indicate the waveform pattern like shown in the figure when the tire is slowly turned? Does the oscilloscope indication repeat the waveform pattern like shown in the figure when the tire is slowly turned in equal speed for one rotation or more?	Go to step **10**.	Go to step **9**.
9	**CHECK ABS WHEEL SPEED SENSOR OR MAGNETIC ENCODER.**	Are there foreign matter, breakage or damage at the tip of ABS wheel speed sensor or magnetic encoder?	Remove dirt thoroughly. Also replace the ABS wheel speed sensor or magnetic encoder as a unit with hub unit bearing if it is broken or damaged.	Go to step **10**.
10	**CHECK CAUSE OF SIGNAL NOISE.** Make sure the radio wave devices and electronic components are installed correctly.	Are the radio wave devices and electronic components installed correctly?	Go to step **11**.	Install the radio wave devices and electronic components properly.

	Step	Check	Yes	No
11	**CHECK CAUSE OF SIGNAL NOISE.** Check if the noise sources (such as an antenna) are installed near the sensor harness.	Is the noise sources installed?	Go to step **12**.	Install the noise sources apart from sensor harness.
12	**CHECK VDCCM&H/U.** 1) Connect all connectors. 2) Clear the memory. <Ref. to VDC(diag)-25, Clear Memory Mode.> 3) Perform the Inspection Mode. <Ref. to VDC(diag)-24, Inspection Mode.> 4) Read the DTC.	Is the same DTC displayed?	Go to step **13**.	Go to step **14**.
13	**CHECK FREEZE FRAME DATA OF ABS WHEEL SPEED SENSOR USING SUBARU SELECT MONITOR.** 1) Using the Subaru Select Monitor, select “Freeze Frame Data”. 2) Read the ABS wheel speed sensor output.	Is the ABS wheel speed sensor output different compared with other wheels?	Replace the ABS wheel speed sensor which has a difference. <Ref. to VDC-20, Front ABS Wheel Speed Sensor.> <Ref. to VDC-22, Rear ABS Wheel Speed Sensor.>	Replace the VDCCM&H/U. <Ref. to VDC-7, VDC Control Module and Hydraulic Control Unit (VDCCM&H/U).>
14	**CHECK OTHER DTC DETECTION.**	Is any other DTC displayed?	Perform the diagnosis according to DTC. <Ref. to VDC(diag)-35, List of Diagnostic Trouble Code (DTC).>	It results from a temporary noise interference. NOTE: Though the ABS warning light, and the VDC warning light & VDC indicator light remain lit at this point, this is normal. Drive the vehicle at 12 km/h (7 MPH) or more in order to turn off the ABS warning light, and the VDC warning light & VDC indicator light. Be sure to drive the vehicle and check that the warning light goes off.

I: DTC C0031 FR HOLD VALVE MALFUNCTION

NOTE:
For the diagnostic procedure, refer to DTC C0064 “NORMAL CLOSING VALVE 2 MALFUNCTION”. <Ref. to VDC(diag)-47, DTC C0064 NORMAL CLOSING VALVE 2 MALFUNCTION, Diagnostic Procedure with Diagnostic Trouble Code (DTC).>

J: DTC C0032 FR PRESSURE REDUCING VALVE MALFUNCTION

NOTE:
For the diagnostic procedure, refer to DTC C0064 “NORMAL CLOSING VALVE 2 MALFUNCTION”. <Ref. to VDC(diag)-47, DTC C0064 NORMAL CLOSING VALVE 2 MALFUNCTION, Diagnostic Procedure with Diagnostic Trouble Code (DTC).>

K: DTC C0033 FL HOLD VALVE MALFUNCTION

NOTE:
For the diagnostic procedure, refer to C0064 “NORMAL CLOSING VALVE 2 MALFUNCTION”. <Ref. to VDC(diag)-47, DTC C0064 NORMAL CLOSING VALVE 2 MALFUNCTION, Diagnostic Procedure with Diagnostic Trouble Code (DTC).>

L: DTC C0034 FL PRESSURE REDUCING VALVE MALFUNCTION

NOTE:
For the diagnostic procedure, refer to C0064 “NORMAL CLOSING VALVE 2 MALFUNCTION”. <Ref. to VDC(diag)-47, DTC C0064 NORMAL CLOSING VALVE 2 MALFUNCTION, Diagnostic Procedure with Diagnostic Trouble Code (DTC).>

M: DTC C0035 RR HOLD VALVE MALFUNCTION

NOTE:
For the diagnostic procedure, refer to C0064 “NORMAL CLOSING VALVE 2 MALFUNCTION”. <Ref. to VDC(diag)-47, DTC C0064 NORMAL CLOSING VALVE 2 MALFUNCTION, Diagnostic Procedure with Diagnostic Trouble Code (DTC).>

N: DTC C0036 RR PRESSURE REDUCING VALVE MALFUNCTION

NOTE:
For the diagnostic procedure, refer to C0064 “NORMAL CLOSING VALVE 2 MALFUNCTION”. <Ref. to VDC(diag)-47, DTC C0064 NORMAL CLOSING VALVE 2 MALFUNCTION, Diagnostic Procedure with Diagnostic Trouble Code (DTC).>

O: DTC C0037 RL HOLD VALVE MALFUNCTION

NOTE:
For the diagnostic procedure, refer to C0064 “NORMAL CLOSING VALVE 2 MALFUNCTION”. <Ref. to VDC(diag)-47, DTC C0064 NORMAL CLOSING VALVE 2 MALFUNCTION, Diagnostic Procedure with Diagnostic Trouble Code (DTC).>

P: DTC C0038 RL PRESSURE REDUCING VALVE MALFUNCTION

NOTE:
For the diagnostic procedure, refer to C0064 “NORMAL CLOSING VALVE 2 MALFUNCTION”. <Ref. to VDC(diag)-47, DTC C0064 NORMAL CLOSING VALVE 2 MALFUNCTION, Diagnostic Procedure with Diagnostic Trouble Code (DTC).>

Q: DTC C0061 NORMAL OPENING VALVE 1 MALFUNCTION

NOTE:
For the diagnostic procedure, refer to C0064 “NORMAL CLOSING VALVE 2 MALFUNCTION”. <Ref. to VDC(diag)-47, DTC C0064 NORMAL CLOSING VALVE 2 MALFUNCTION, Diagnostic Procedure with Diagnostic Trouble Code (DTC).>

R: DTC C0062 NORMAL OPENING VALVE 2 MALFUNCTION

NOTE:
For the diagnostic procedure, refer to C0064 “NORMAL CLOSING VALVE 2 MALFUNCTION”. <Ref. to VDC(diag)-47, DTC C0064 NORMAL CLOSING VALVE 2 MALFUNCTION, Diagnostic Procedure with Diagnostic Trouble Code (DTC).>

S: DTC C0063 NORMAL CLOSING VALVE 1 MALFUNCTION

NOTE:
For the diagnostic procedure, refer to C0064 “NORMAL CLOSING VALVE 2 MALFUNCTION”. <Ref. to VDC(diag)-47, DTC C0064 NORMAL CLOSING VALVE 2 MALFUNCTION, Diagnostic Procedure with Diagnostic Trouble Code (DTC).>

T: DTC C0064 NORMAL CLOSING VALVE 2 MALFUNCTION

DTC DETECTING CONDITION:

- Defective harness connector
- Defective VDCH/U solenoid valve

TROUBLE SYMPTOM:

- ABS does not operate.
- EBD does not operate.
- VDC does not operate.
- Hill start assist does not operate.

WIRING DIAGRAM:

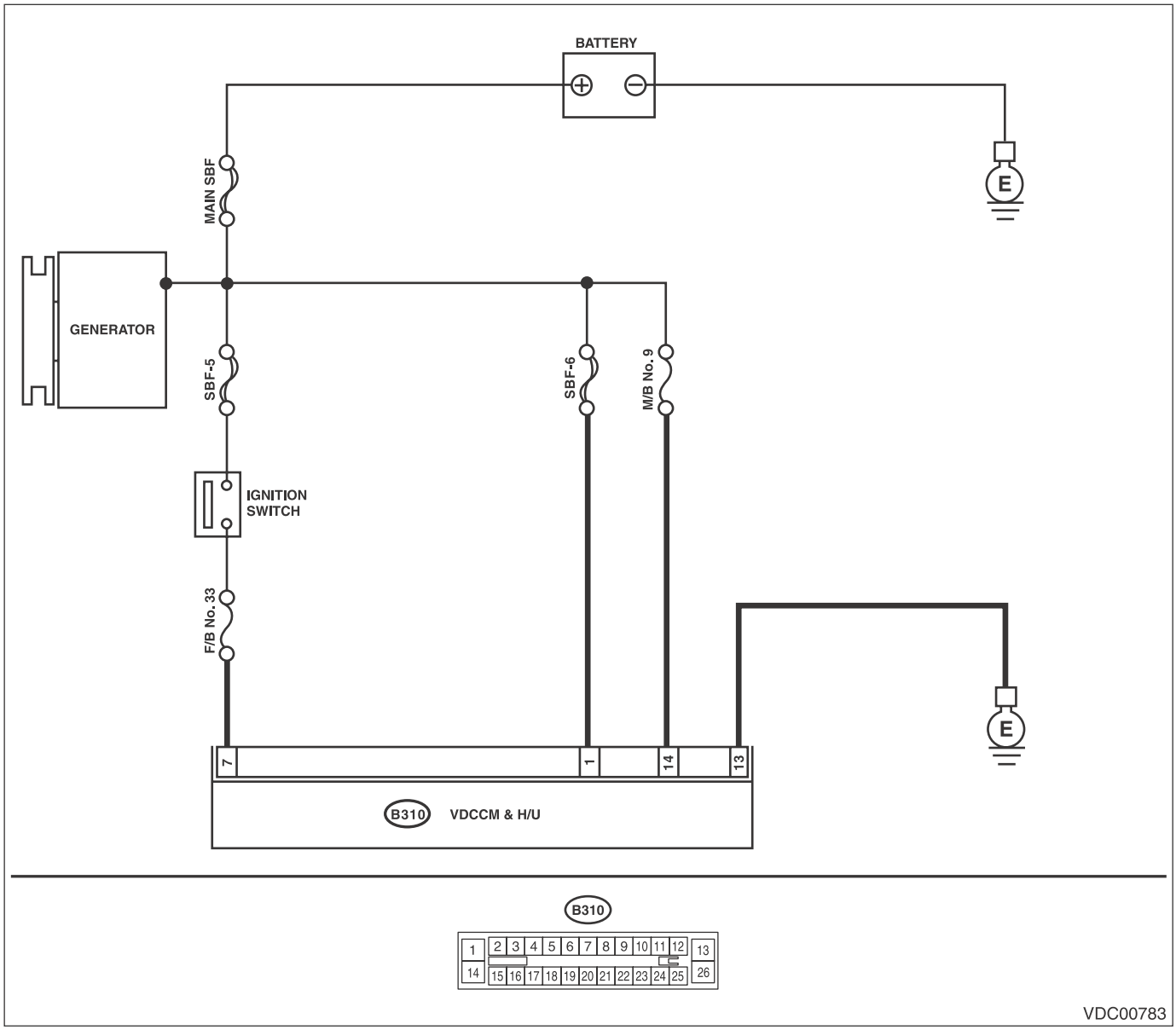

	Step	Check	Yes	No
1	**CHECK VDCCM&H/U INPUT VOLTAGE.** 1) Turn the ignition switch to OFF. 2) Disconnect the connector from the VDCCM&H/U. 3) Run the engine at idle. 4) Measure the voltage between VDCCM&H/U connector and chassis ground. ***Connector & terminal*** ***(B310) No. 7 (+) — Chassis ground (–):*** ***(B310) No. 14 (+) — Chassis ground (–):*** ***(B310) No. 1 (+) — Chassis ground (–):***	Is the voltage 10 — 15 V?	Go to step **2**.	Repair the power supply circuit.
2	**CHECK VDCCM&H/U GROUND CIRCUIT.** 1) Turn the ignition switch to OFF. 2) Measure the resistance between VDCCM&H/U connector and chassis ground. ***Connector & terminal*** ***(B310) No. 13 — Chassis ground:***	Is the resistance less than 10 Ω?	Go to step **3**.	Repair the VDCCM&H/U ground harness.
3	**CHECK POOR CONTACT OF CONNECTORS.**	Is there poor contact of connector between generator, battery and VDCCM&H/U?	Repair the connector.	Go to step **4**.
4	**CHECK VDCCM&H/U.** 1) Connect all connectors. 2) Clear the memory. <Ref. to VDC(diag)-25, Clear Memory Mode.> 3) Perform the Inspection Mode. <Ref. to VDC(diag)-24, Inspection Mode.> 4) Read the DTC.	Is the same DTC displayed?	Replace the VDCCM&H/U. <Ref. to VDC-7, VDC Control Module and Hydraulic Control Unit (VDCCM&H/U).>	Go to step **5**.
5	**CHECK OTHER DTC DETECTION.**	Is any other DTC displayed?	Perform the diagnosis according to DTC. <Ref. to VDC(diag)-35, List of Diagnostic Trouble Code (DTC).>	Temporary poor contact occurs.

U: DTC C0041 ECM

DTC DETECTING CONDITION:
Defective VDCCM&H/U

TROUBLE SYMPTOM:
- ABS does not operate.
- EBD does not operate.
- VDC does not operate.
- Hill start assist does not operate.

WIRING DIAGRAM:

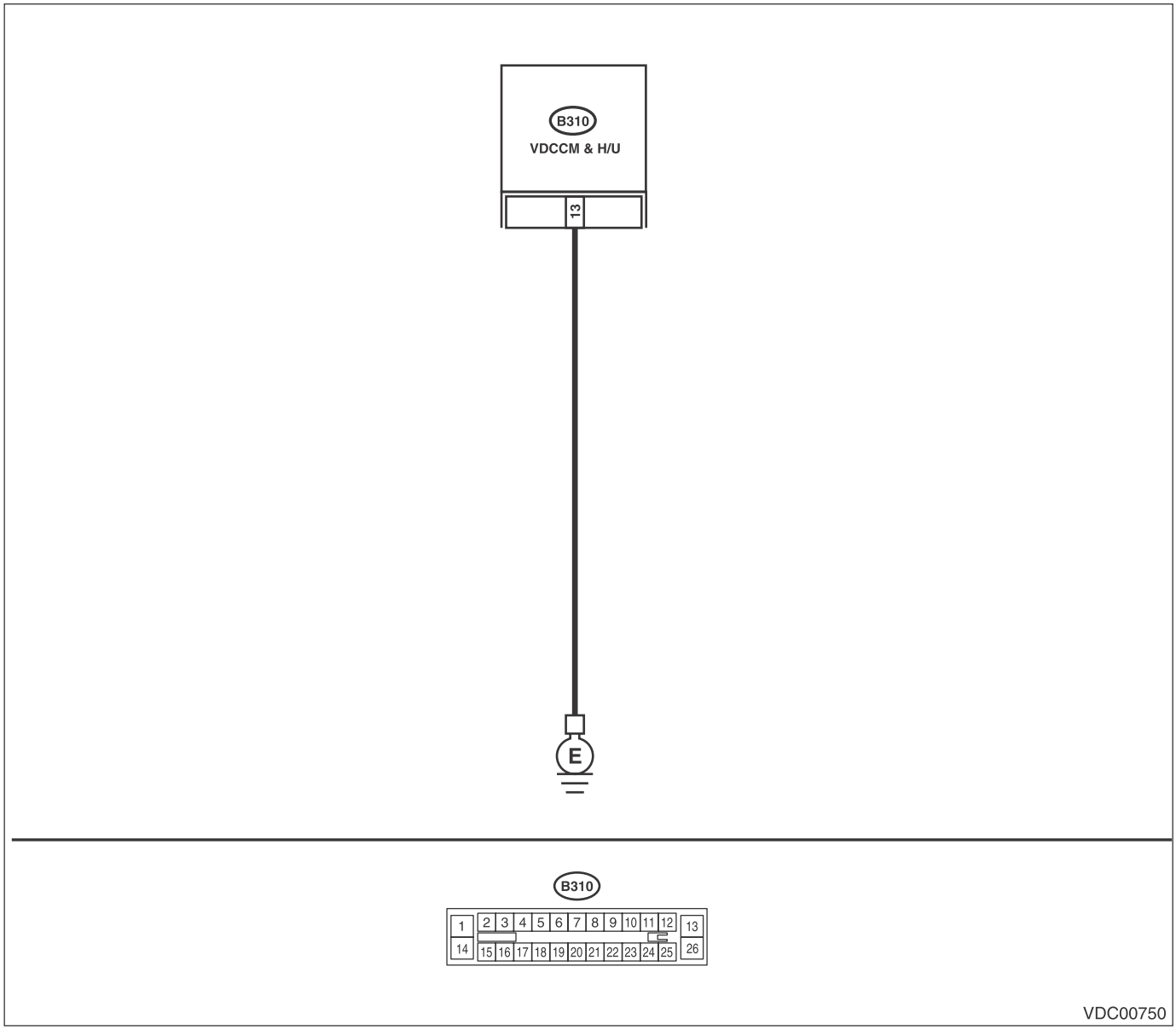

Step		Check	Yes	No
1	**CHECK VDCCM&H/U GROUND CIRCUIT.** 1) Turn the ignition switch to OFF. 2) Disconnect the connector from the VDCCM&H/U. 3) Measure the resistance between VDCCM&H/U and chassis ground. ***Connector & terminal*** ***(B310) No. 13 — Chassis ground:***	Is the resistance less than 10 Ω?	Go to step **2**.	Repair the VDCCM&H/U ground harness.

	Step	Check	Yes	No
2	**CHECK POOR CONTACT OF CONNECTORS.**	Is there poor contact of the connector between the battery, ignition switch and VDCCM&H/U?	Repair the connector.	Go to step **3**.
3	**CHECK CAUSE OF SIGNAL NOISE.**	Are the radio wave devices and electronic components installed correctly?	Go to step **4**.	Install the radio wave devices and electronic components properly.
4	**CHECK CAUSE OF SIGNAL NOISE.**	Is there a noise source (such as an antenna) installed near the sensor harness and VDCCM?	Install the noise source apart from the sensor harness and VDCCM.	Go to step **5**.
5	**CHECK VDCCM&H/U.** 1) Connect all connectors. 2) Clear the memory. <Ref. to VDC(diag)-25, Clear Memory Mode.> 3) Perform the Inspection Mode. <Ref. to VDC(diag)-24, Inspection Mode.> 4) Read the DTC.	Is the same DTC displayed?	Replace the VDCCM&H/U. <Ref. to VDC-7, VDC Control Module and Hydraulic Control Unit (VDCCM&H/U).>	Go to step **6**.
6	**CHECK OTHER DTC DETECTION.**	Is any other DTC displayed?	Perform the diagnosis according to DTC. <Ref. to VDC(diag)-35, List of Diagnostic Trouble Code (DTC).>	Temporary poor contact occurs.

V: DTC C0041 PARAMETER SELECTION ERROR

DTC DETECTING CONDITION:
VDCCM parameter selection error
TROUBLE SYMPTOM:
- ABS does not operate.
- EBD does not operate.
- VDC does not operate.
- Hill start assist does not operate.

NOTE:
When the VDCCM&H/U is replaced, this DTC may be stored.

	Step	Check	Yes	No
1	**CHECK VDCCM&H/U IDENTIFICATION SYMBOL.** Check the identification symbol attached on the H/U. Identification symbol: V1	Is the identification symbol correct?	Go to step **2**.	Replace the VDCCM&H/U. <Ref. to VDC-7, VDC Control Module and Hydraulic Control Unit (VDCCM&H/U).>
2	**CHECK PARAMETER SELECTED IN VDCCM.** <Ref. to VDC(diag)-19, PARAMETER CHECK, OPERATION, Subaru Select Monitor.>	Does the parameter registered in the VDCCM match the relevant vehicle?	Replace the VDCCM&H/U. <Ref. to VDC-7, VDC Control Module and Hydraulic Control Unit (VDCCM&H/U).>	Select and register the correct parameter. <Ref. to VDC(diag)-18, PARAMETER SELECTION, OPERATION, Subaru Select Monitor.>

W: DTC C0042 POWER SUPPLY VOLTAGE FAILURE

DTC DETECTING CONDITION:
Improper VDCCM&H/U power supply voltage
TROUBLE SYMPTOM:

- ABS does not operate.
- EBD may not operate.
- VDC does not operate.
- Hill start assist does not operate.

NOTE:
Warning lights go off if voltage returns.
WIRING DIAGRAM:

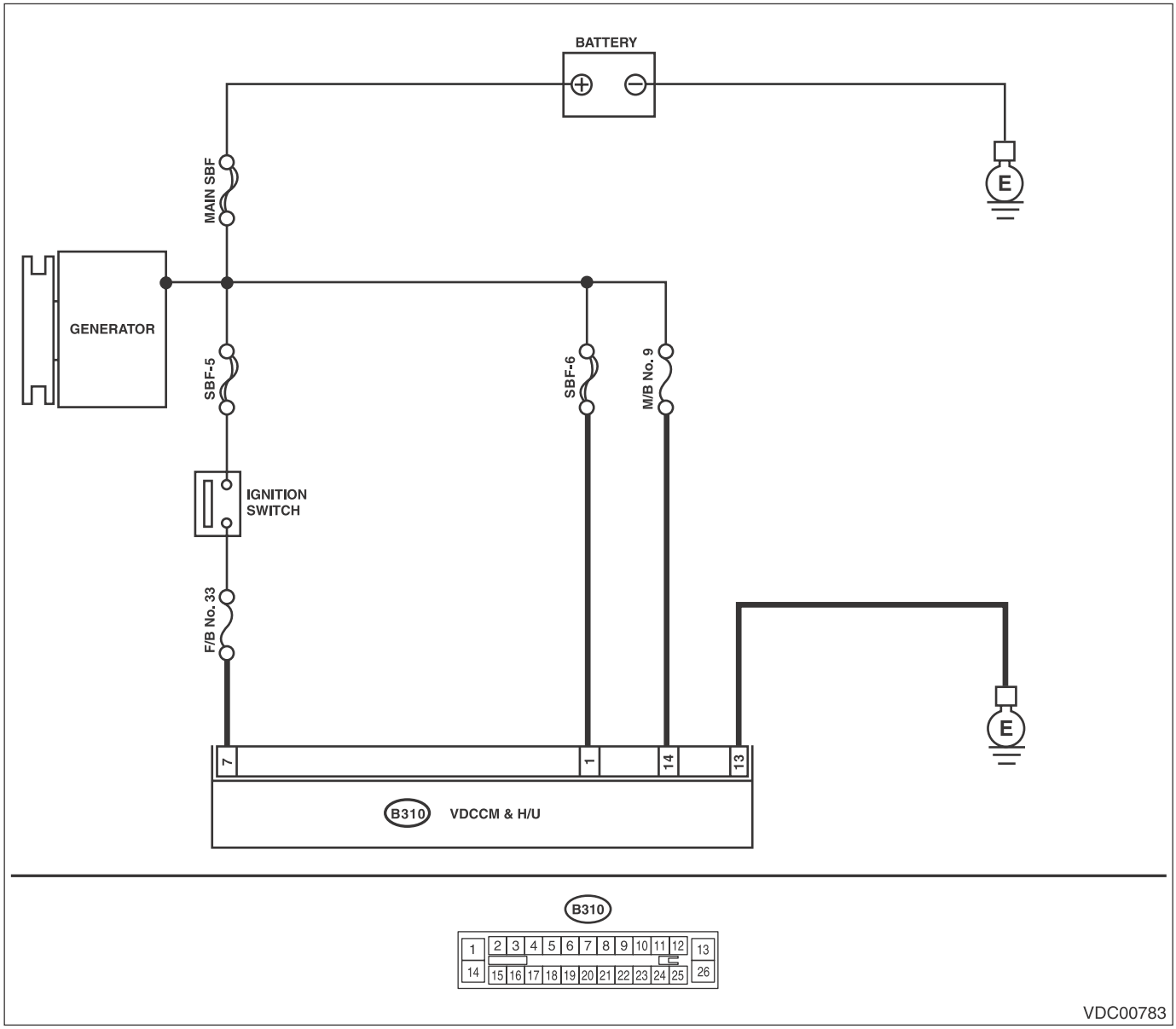

	Step	Check	Yes	No
1	**CHECK GENERATOR.** 1) Start the engine. 2) Run the engine at idle after warming up. 3) Measure the voltage between generator terminal B and chassis ground. ***Terminals*** ***Generator terminal B (+) — Chassis ground (–):***	Is the voltage 10 — 15 V?	Go to step **2**.	Repair the generator. <Ref. to SC(H4SO)-18, Generator.>
2	**CHECK BATTERY TERMINAL.** Turn the ignition switch to OFF.	Are the positive and negative battery terminals clamped tightly?	Go to step **3**.	Tighten the terminal.
3	**CHECK VDCCM&H/U INPUT VOLTAGE.** 1) Disconnect the connector from the VDCCM&H/U. 2) Run the engine at idle. 3) Operate devices such as headlights, air conditioner, defogger, etc. which produce an electrical load. 4) Measure the voltage between VDCCM&H/U connector and chassis ground. ***Connector & terminal*** ***(B310) No. 7 (+) — Chassis ground (–):*** ***(B310) No. 14 (+) — Chassis ground (–):*** ***(B310) No. 1 (+) — Chassis ground (–):***	Is the voltage 10 — 15 V?	Go to step **4**.	Repair the power supply circuit.
4	**CHECK VDCCM&H/U GROUND CIRCUIT.** 1) Turn the ignition switch to OFF. 2) Measure the resistance between VDCCM&H/U connector and chassis ground. ***Connector & terminal*** ***(B310) No. 13 — Chassis ground:***	Is the resistance less than 10 Ω?	Go to step **5**.	Repair the VDCCM&H/U ground harness.
5	**CHECK POOR CONTACT OF CONNECTORS.**	Is there poor contact of connector between generator, battery and VDCCM&H/U?	Repair the connector.	Go to step **6**.
6	**CHECK VDCCM&H/U.** 1) Connect all connectors. 2) Clear the memory. <Ref. to VDC(diag)-25, Clear Memory Mode.> 3) Perform the Inspection Mode. <Ref. to VDC(diag)-24, Inspection Mode.> 4) Read the DTC.	Is the same DTC displayed?	Replace the VDCCM&H/U. <Ref. to VDC-7, VDC Control Module and Hydraulic Control Unit (VDCCM&H/U).>	Go to step **7**.
7	**CHECK OTHER DTC DETECTION.**	Is any other DTC displayed?	Perform the diagnosis according to DTC. <Ref. to VDC(diag)-35, List of Diagnostic Trouble Code (DTC).>	Temporary poor contact occurs.

X: DTC C0044 TCM COMMUNICATION CIRCUIT

DTC DETECTING CONDITION:

No CAN signal from TCM.

TROUBLE SYMPTOM:

- ABS does not operate.
- VDC does not operate.
- Hill start assist does not operate.

	Step	Check	Yes	No
1	**CHECK LAN SYSTEM.** Perform the diagnosis for LAN system. <Ref. to LAN(diag)-10, OPERATION, Read Diagnostic Trouble Code (DTC).>	Is there any fault in LAN system?	Perform the diagnosis according to DTC for LAN system. <Ref. to LAN(diag)-31, List of Diagnostic Trouble Code (DTC).>	Go to step **2**.
2	**CHECK POOR CONTACT OF CONNECTORS.**	Is there poor contact of TCM connector?	Repair the connector.	Go to step **3**.
3	**CHECK TCM.**	Is the TCM normal?	Go to step **4**.	Replace the TCM. <Ref. to 5AT-58, Transmission Control Module (TCM).> <Ref. to CVT-122, Transmission Control Module (TCM).>
4	**CHECK VDCCM&H/U.** 1) Connect all connectors. 2) Clear the memory. <Ref. to VDC(diag)-25, Clear Memory Mode.> 3) Perform the Inspection Mode. <Ref. to VDC(diag)-24, Inspection Mode.> 4) Read the DTC.	Is the same DTC displayed?	Replace the VDCCM&H/U. <Ref. to VDC-7, VDC Control Module and Hydraulic Control Unit (VDCCM&H/U).>	Go to step **5**.
5	**CHECK OTHER DTC DETECTION.**	Is any other DTC displayed?	Perform the diagnosis according to DTC. <Ref. to VDC(diag)-35, List of Diagnostic Trouble Code (DTC).>	It results from a temporary noise interference.

Y: DTC C0045 TCM MALFUNCTION

DTC DETECTING CONDITION:
Defective TCM
TROUBLE SYMPTOM:
- ABS does not operate.
- VDC does not operate.
- Hill start assist does not operate.

	Step	Check	Yes	No
1	**CHECK AT SYSTEM OR CVT SYSTEM.** 1) Start the engine. 2) Check the DTC in AT system or CVT system.	Is DTC of AT system or CVT system displayed?	Repair the AT system or CVT system. <Ref. to CVT(diag)-32, List of Diagnostic Trouble Code (DTC).> <Ref. to CVT(diag)-32, List of Diagnostic Trouble Code (DTC).>	Go to step **2**.
2	**CHECK VDCCM&H/U.** 1) Connect all connectors. 2) Clear the memory. <Ref. to VDC(diag)-25, Clear Memory Mode.> 3) Perform the Inspection Mode. <Ref. to VDC(diag)-24, Inspection Mode.> 4) Read the DTC.	Is the same DTC displayed?	Replace the VDCCM&H/U. <Ref. to VDC-7, VDC Control Module and Hydraulic Control Unit (VDCCM&H/U).>	Go to step **3**.
3	**CHECK OTHER DTC DETECTION.**	Is any other DTC displayed?	Perform the diagnosis according to DTC. <Ref. to VDC(diag)-35, List of Diagnostic Trouble Code (DTC).>	It results from a temporary noise interference.

Z: DTC C0045 INCORRECT VDC CONTROL MODULE SPECIFICATIONS

DTC DETECTING CONDITION:
Different control module specification
TROUBLE SYMPTOM:
- ABS does not operate.
- VDC does not operate.
- Hill start assist does not operate.

NOTE:
When parameter selection for VDCCM is improper, this DTC may be memorized.

	Step	Check	Yes	No
1	**CHECK VDCCM&H/U IDENTIFICATION SYMBOL.** Check the identification symbol attached on the H/U. Identification symbol: V1	Is the identification symbol correct?	Go to step **2**.	Replace the VDCCM&H/U. <Ref. to VDC-7, VDC Control Module and Hydraulic Control Unit (VDCCM&H/U).>
2	**CHECK PARAMETER SELECTED IN VDCCM.** <Ref. to VDC(diag)-19, PARAMETER CHECK, OPERATION, Subaru Select Monitor.>	Does the parameter registered in the VDCCM match the relevant vehicle?	Go to step **3**.	Select and register the correct parameter. <Ref. to VDC(diag)-18, PARAMETER SELECTION, OPERATION, Subaru Select Monitor.>
3	**CHECK TCM SPECIFICATION.** Check the TCM specification.	Is the specification of TCM same as vehicle specification?	Go to step **4**.	Replace the TCM. <Ref. to 5AT-58, Transmission Control Module (TCM).> <Ref. to CVT-122, Transmission Control Module (TCM).>
4	**CHECK AT SYSTEM OR CVT SYSTEM.** 1) Start the engine. 2) Check the DTC in AT system or CVT system.	Is DTC of AT system or CVT system displayed?	Repair the AT system or CVT system. <Ref. to 5AT(diag)-33, List of Diagnostic Trouble Code (DTC).> <Ref. to CVT(diag)-32, List of Diagnostic Trouble Code (DTC).>	Go to step **5**.
5	**CHECK ECM SPECIFICATION.** Check the ECM specification.	Is the specification of ECM same as vehicle specification?	Go to step **6**.	Replace the ECM. <Ref. to FU(H4SO)-39, Engine Control Module (ECM).> <Ref. to FU(H4DOTC)-57, Engine Control Module (ECM).> <Ref. to FU(H6DO)-50, Engine Control Module (ECM).>

	Step	Check	Yes	No
6	**CHECK VDCCM&H/U.** 1) Connect all connectors. 2) Clear the memory. <Ref. to VDC(diag)-25, Clear Memory Mode.> 3) Perform the Inspection Mode. <Ref. to VDC(diag)-24, Inspection Mode.> 4) Read the DTC.	Is the same DTC displayed?	Replace the VDCCM&H/U. <Ref. to VDC-7, VDC Control Module and Hydraulic Control Unit (VDCCM&H/U).>	Go to step **7**.
7	**CHECK OTHER DTC DETECTION.**	Is any other DTC displayed?	Perform the diagnosis according to DTC. <Ref. to VDC(diag)-35, List of Diagnostic Trouble Code (DTC).>	It results from a temporary noise interference.

AA:DTC C0046 BODY INTEGRATED MODULE COMMUNICATION CIRCUIT

DTC DETECTING CONDITION:

No CAN signal received from body integrated unit.

TROUBLE SYMPTOM:

- VDC may not operate.
- Hill start assist does not operate. (MT model only)

	Step	Check	Yes	No
1	**CHECK LAN SYSTEM.** Perform the diagnosis for LAN system. <Ref. to LAN(diag)-10, OPERATION, Read Diagnostic Trouble Code (DTC).>	Is there any fault in LAN system?	Perform the diagnosis according to DTC for LAN system. <Ref. to LAN(diag)-31, List of Diagnostic Trouble Code (DTC).>	Go to step **2**.
2	**CHECK POOR CONTACT OF CONNECTORS.**	Is there poor contact of body integrated unit connector?	Repair the connector.	Go to step **3**.
3	**CHECK BODY INTEGRATED UNIT.** Perform the diagnosis for body integrated unit. <Ref. to BC(diag)-11, OPERATION, Read Diagnostic Trouble Code (DTC).>	Is the body integrated unit normal?	Go to step **4**.	Perform the diagnosis according to DTC for the body integrated unit. <Ref. to BC(diag)-24, List of Diagnostic Trouble Code (DTC).>
4	**CHECK VDCCM&H/U.** 1) Connect all connectors. 2) Clear the memory. <Ref. to VDC(diag)-25, Clear Memory Mode.> 3) Perform the Inspection Mode. <Ref. to VDC(diag)-24, Inspection Mode.> 4) Read the DTC.	Is the same DTC displayed?	Replace the VDCCM&H/U. <Ref. to VDC-7, VDC Control Module and Hydraulic Control Unit (VDCCM&H/U).>	Go to step **5**.
5	**CHECK OTHER DTC DETECTION.**	Is any other DTC displayed?	Perform the diagnosis according to DTC. <Ref. to VDC(diag)-35, List of Diagnostic Trouble Code (DTC).>	It results from a temporary noise interference.

AB:DTC C0047 CAN COMMUNICATION

DTC DETECTING CONDITION:

CAN communication line circuit is open or shorted.

TROUBLE SYMPTOM:

- VDC does not operate.
- Hill start assist does not operate.

WIRING DIAGRAM:

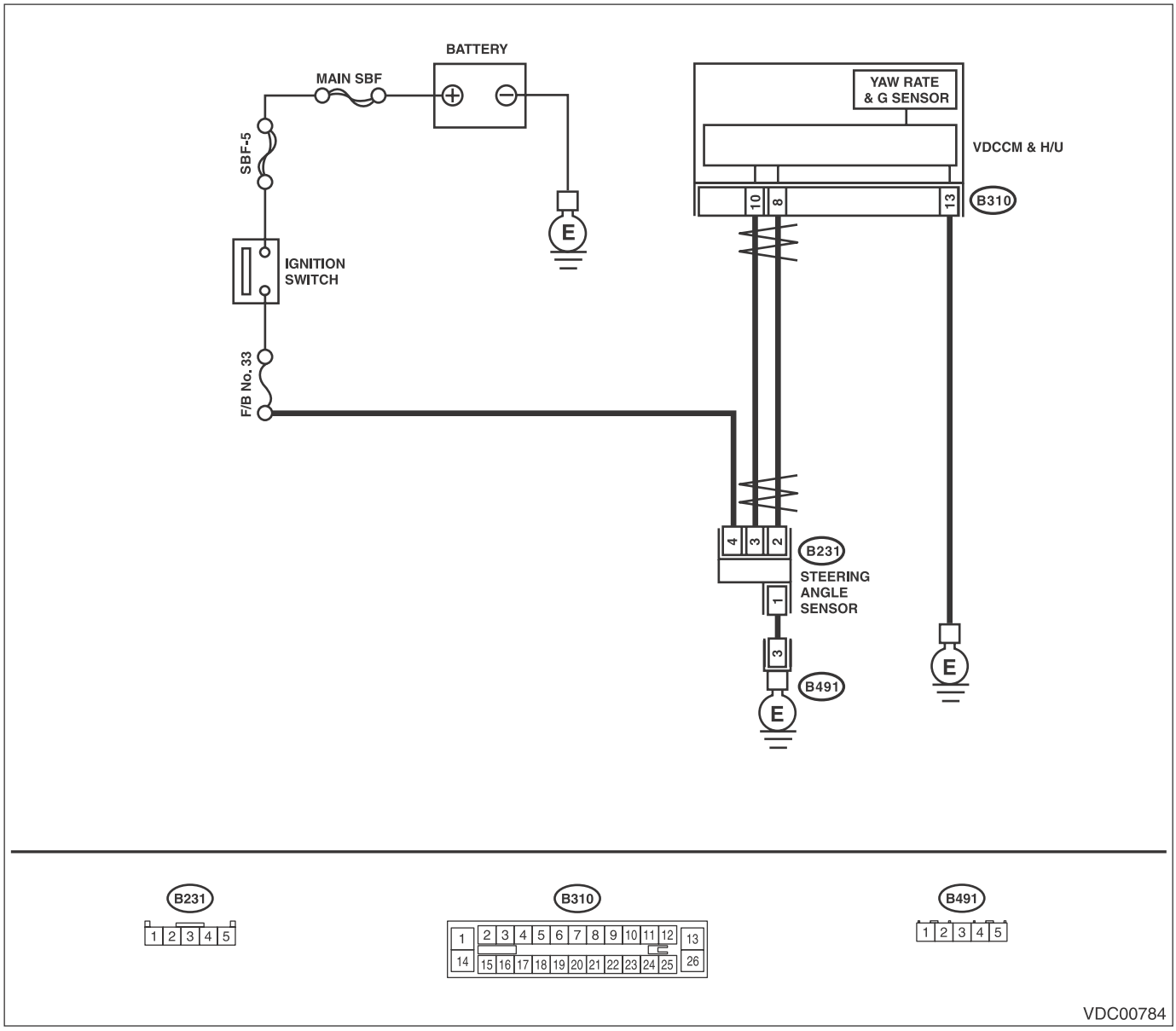

Step		Check	Yes	No
1	**CHECK LAN SYSTEM.** Perform the diagnosis for LAN system. <Ref. to LAN(diag)-10, OPERATION, Read Diagnostic Trouble Code (DTC).>	Is there any fault in LAN system?	Perform the diagnosis according to DTC for LAN system. <Ref. to LAN(diag)-31, List of Diagnostic Trouble Code (DTC).>	Go to step **2**.
2	**CHECK POOR CONTACT OF CONNECTORS.**	Is there poor contact of VDCCM&H/U connector?	Repair the connector.	Go to step **3**.

	Step	Check	Yes	No
3	**CHECK OUTPUT OF STEERING ANGLE SENSOR WITH SUBARU SELECT MONITOR.** 1) Select {Current Data Display & Save} in Subaru Select Monitor. 2) Check the steering angle sensor output.	Does the output signal change?	Go to step **4**.	Check output of the steering angle sensor. <Ref. to VDC(diag)-78, DTC C0071 STEER ANGLE SENSOR OP, Diagnostic Procedure with Diagnostic Trouble Code (DTC).>
4	**CHECK VDCCM&H/U.** 1) Connect all connectors. 2) Clear the memory. <Ref. to VDC(diag)-25, Clear Memory Mode.> 3) Perform the Inspection Mode. <Ref. to VDC(diag)-24, Inspection Mode.> 4) Read the DTC.	Is the same DTC displayed?	Replace the VDCCM&H/U. <Ref. to VDC-7, VDC Control Module and Hydraulic Control Unit (VDCCM&H/U).>	Temporary poor contact occurs.

AC:DTC C0048 PARKING BRAKE SYSTEM COMMUNICATION CIRCUIT

DTC DETECTING CONDITION:

No CAN signal from parking brake control module.

TROUBLE SYMPTOM:

- VDC may not operate.
- Hill start assist does not operate.

	Step	Check	Yes	No
1	**CHECK LAN SYSTEM.** Perform the diagnosis for LAN system. <Ref. to LAN(diag)-10, OPERATION, Read Diagnostic Trouble Code (DTC).>	Is there any fault in LAN system?	Perform the diagnosis according to DTC for LAN system. <Ref. to LAN(diag)-31, List of Diagnostic Trouble Code (DTC).>	Go to step **2**.
2	**CHECK POOR CONTACT OF CONNECTORS.**	Is there poor contact of the parking brake control module connector?	Repair the connector.	Go to step **3**.
3	**CHECK PARKING BRAKE SYSTEM.** Perform the diagnosis for the parking brake system. <Ref. to PB(diag)-22, OPERATION, Read Diagnostic Trouble Code (DTC).>	Is the parking brake system normal?	Go to step **4**.	Perform the diagnosis according to DTC for the parking brake system. <Ref. to PB(diag)-34, List of Diagnostic Trouble Code (DTC).>
4	**CHECK VDCCM&H/U.** 1) Connect all connectors. 2) Clear the memory. <Ref. to VDC(diag)-25, Clear Memory Mode.> 3) Perform the Inspection Mode. <Ref. to VDC(diag)-24, Inspection Mode.> 4) Read the DTC.	Is the same DTC displayed?	Replace the VDCCM&H/U. <Ref. to VDC-7, VDC Control Module and Hydraulic Control Unit (VDCCM&H/U).>	Go to step **5**.
5	**CHECK OTHER DTC DETECTION.**	Is any other DTC displayed?	Perform the diagnosis according to DTC. <Ref. to VDC(diag)-35, List of Diagnostic Trouble Code (DTC).>	It results from a temporary noise interference.

AD:DTC C0051 VALVE RELAY

DTC DETECTING CONDITION:

Defective valve relay

TROUBLE SYMPTOM:

- ABS does not operate.
- EBD does not operate.
- VDC does not operate.
- Hill start assist does not operate.

WIRING DIAGRAM:

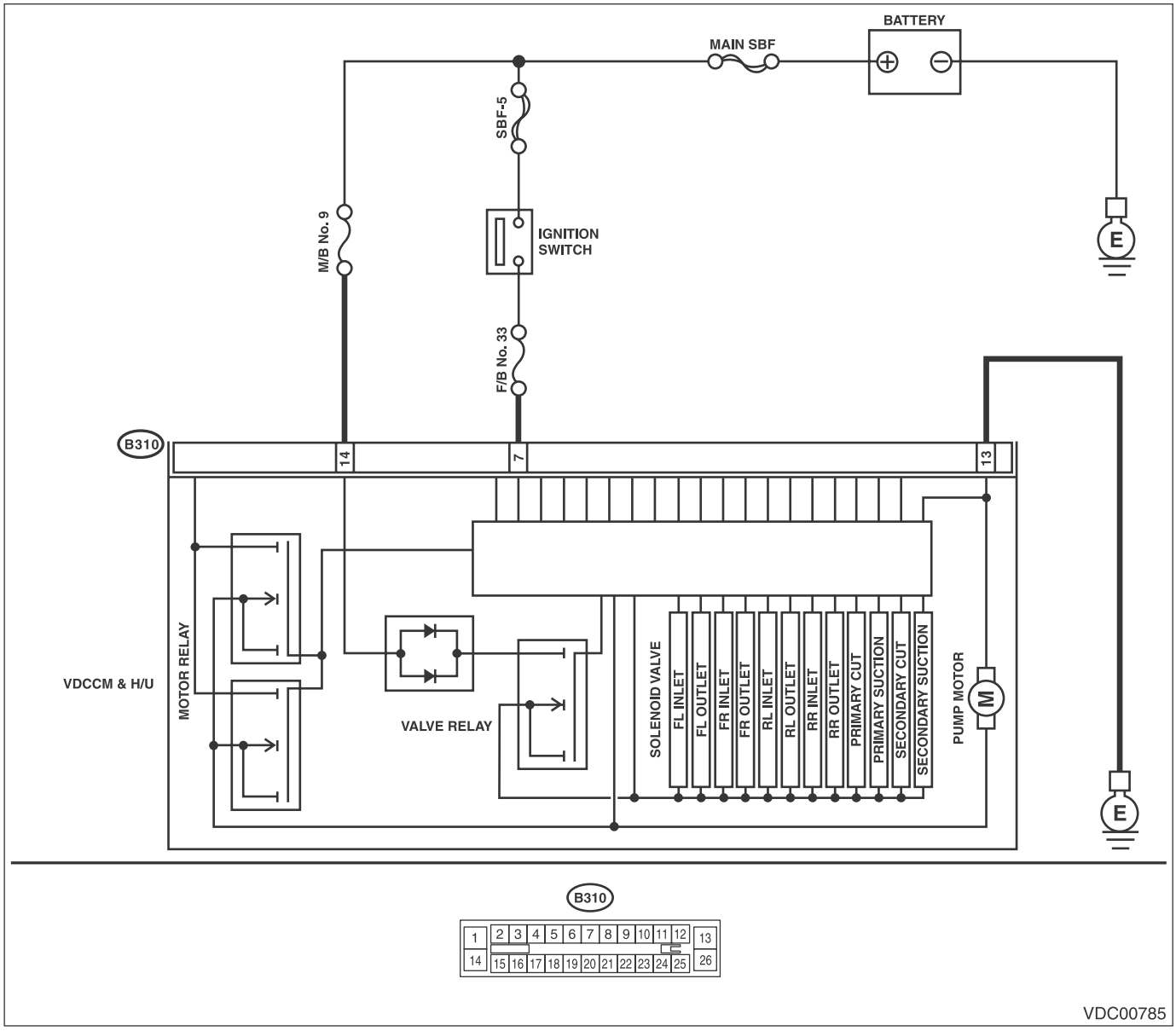

	Step	Check	Yes	No
1	**CHECK VDCCM&H/U INPUT VOLTAGE.** 1) Turn the ignition switch to OFF. 2) Disconnect the connector from the VDCCM&H/U. 3) Run the engine at idle. 4) Measure the voltage between VDCCM&H/U connector and chassis ground. ***Connector & terminal*** ***(B310) No. 7 (+) — Chassis ground (–):*** ***(B310) No. 14 (+) — Chassis ground (–):***	Is the voltage 10 — 15 V?	Go to step **2**.	Repair the power supply circuit.
2	**CHECK VDCCM&H/U INPUT VOLTAGE.** Calculate the voltage difference measured in step 1. A: (B310) No. 7 (+) — Chassis ground (–): B: (B310) No. 14 (+) — Chassis ground (–):	Is the voltage difference between A and B 2 V or more?	Repair the power supply circuit.	Go to step **3**.
3	**CHECK INSTALLATION OF VDCCM&H/U GROUND.**	Is the VDCCM&H/U ground terminal installation bolt tightened to 13 N·m (1.3 kgf-m, 9.6 ft-lb)?	Go to step **4**.	Tighten the VDCCM&H/U ground terminal installation bolt.
4	**CHECK VDCCM&H/U GROUND CIRCUIT.** 1) Turn the ignition switch to OFF. 2) Measure the resistance between VDCCM&H/U connector and chassis ground. ***Connector & terminal*** ***(B310) No. 13 — Chassis ground:***	Is the resistance less than 10 Ω?	Go to step **5**.	Repair the VDCCM&H/U ground harness.
5	**CHECK VDCCM&H/U VALVE RELAY.** Measure the resistance between VDCCM&H/U connector terminals. ***Connector & terminal*** ***(B310) No. 14 — (B310) No. 13:***	Is the resistance 1 MΩ or more?	Go to step **6**.	Replace the VDCCM&H/U. <Ref. to VDC-7, VDC Control Module and Hydraulic Control Unit (VDCCM&H/U).>
6	**CHECK POOR CONTACT OF CONNECTORS.**	Is there poor contact of connector between generator, battery and VDCCM&H/U?	Repair the connector.	Go to step **7**.
7	**CHECK VDCCM&H/U.** 1) Connect all connectors. 2) Clear the memory. <Ref. to VDC(diag)-25, Clear Memory Mode.> 3) Perform the Inspection Mode. <Ref. to VDC(diag)-24, Inspection Mode.> 4) Read the DTC.	Is the same DTC displayed?	Replace the VDCCM&H/U. <Ref. to VDC-7, VDC Control Module and Hydraulic Control Unit (VDCCM&H/U).>	Go to step **8**.
8	**CHECK OTHER DTC DETECTION.**	Is any other DTC displayed?	Perform the diagnosis according to DTC. <Ref. to VDC(diag)-35, List of Diagnostic Trouble Code (DTC).>	Temporary poor contact occurs.

AE:DTC C0052 MOTOR MALFUNCTION

DTC DETECTING CONDITION:

- Defective motor and motor relay
- Defective harness connector

TROUBLE SYMPTOM:

- ABS does not operate.
- VDC does not operate.
- EBD may not operate.
- Hill start assist does not operate.

WIRING DIAGRAM:

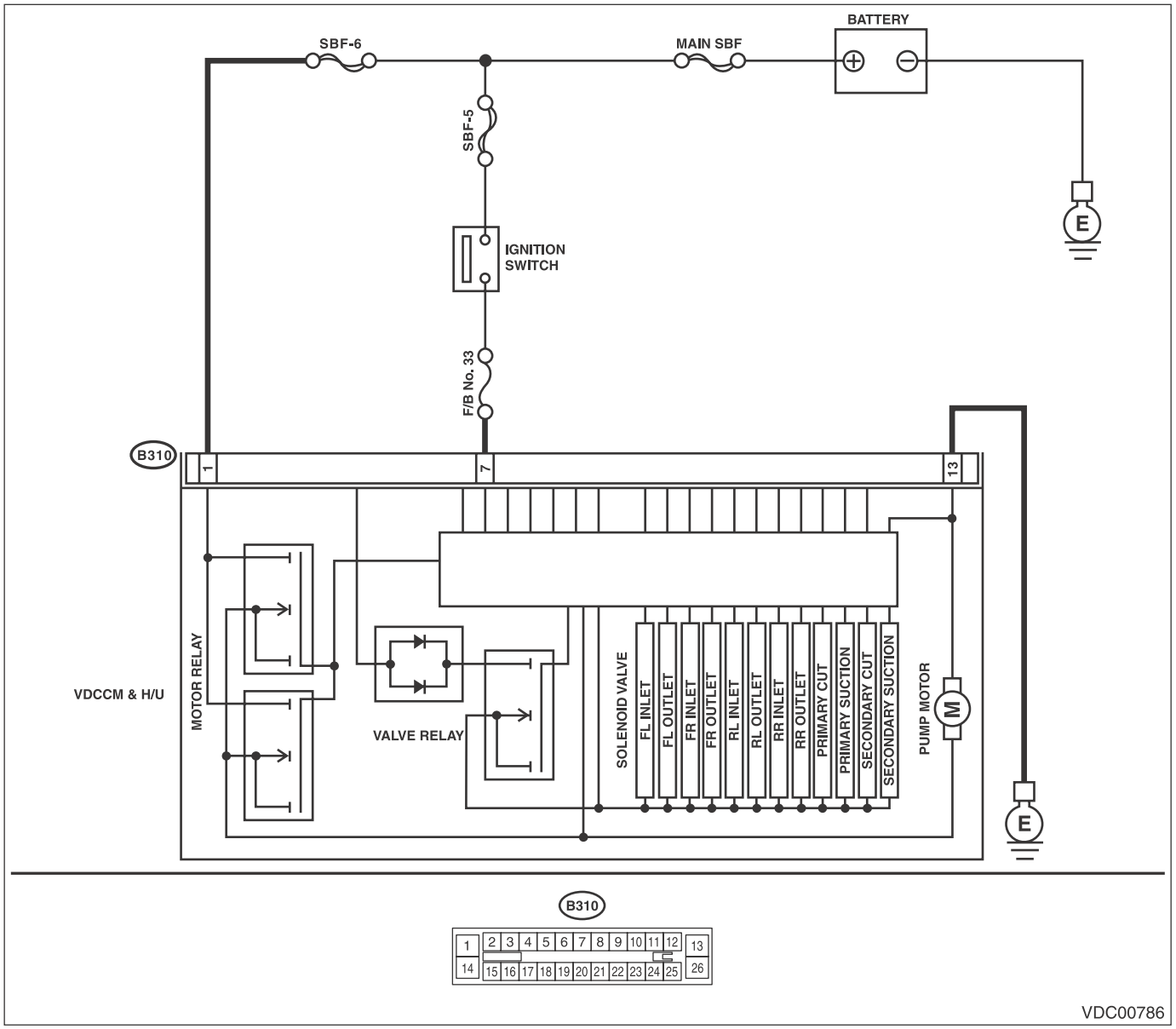

	Step	Check	Yes	No
1	**CHECK VDCCM&H/U INPUT VOLTAGE.** 1) Turn the ignition switch to OFF. 2) Disconnect the connector from the VDCCM&H/U. 3) Turn the ignition switch to ON. 4) Measure the voltage between VDCCM&H/U connector and chassis ground. ***Connector & terminal*** ***(B310) No. 1 (+) — Chassis ground (–):*** ***(B310) No. 7 (+) — Chassis ground (–):***	Is the voltage 10 — 15 V?	Go to step **2**.	Repair the VDCCM&H/U power supply circuit.
2	**CHECK VDCCM&H/U INPUT VOLTAGE.** Calculate the voltage difference measured in step 1. A: (B310) No. 1 (+) — Chassis ground (–): B: (B310) No. 7 (+) — Chassis ground (–):	Is the voltage difference between A and B 2 V or more?	Repair the power supply circuit.	Go to step **3**.
3	**CHECK INSTALLATION OF VDCCM&H/U GROUND.**	Is the VDCCM&H/U ground terminal installation bolt tightened to 13 N·m (1.3 kgf-m, 9.6 ft-lb)?	Go to step **4**.	Tighten the VDCCM&H/U ground terminal installation bolt.
4	**CHECK VDCCM&H/U GROUND CIRCUIT.** 1) Turn the ignition switch to OFF. 2) Measure the resistance between VDCCM&H/U connector and chassis ground. ***Connector & terminal*** ***(B310) No. 13 — Chassis ground:***	Is the resistance less than 10 Ω?	Go to step **5**.	Repair the VDCCM&H/U ground harness.
5	**CHECK VDCCM&H/U MOTOR RELAY.** Measure the resistance between VDCCM&H/U connector terminals. ***Terminals*** ***No. 1 — No. 13:***	Is the resistance 1 MΩ or more?	Go to step **6**.	Replace the VDCCM&H/U. <Ref. to VDC-7, VDC Control Module and Hydraulic Control Unit (VDCCM&H/U).>
6	**CHECK POOR CONTACT OF CONNECTORS.** Turn the ignition switch to OFF.	Is there poor contact of connector between generator, battery and VDCCM&H/U?	Repair the connector.	Go to step **7**.
7	**CHECK VDCCM&H/U.** 1) Connect all connectors. 2) Clear the memory. <Ref. to VDC(diag)-25, Clear Memory Mode.> 3) Perform the Inspection Mode. <Ref. to VDC(diag)-24, Inspection Mode.> 4) Read the DTC.	Is the same DTC displayed?	Replace the VDCCM&H/U. <Ref. to VDC-7, VDC Control Module and Hydraulic Control Unit (VDCCM&H/U).>	Go to step **8**.

Step	Check	Yes	No
8 CHECK OTHER DTC DETECTION.	Is any other DTC displayed?	Perform the diagnosis according to DTC. <Ref. to VDC(diag)-35, List of Diagnostic Trouble Code (DTC).>	Temporary poor contact occurs. NOTE: Though the ABS warning light, and the VDC warning light & VDC indicator light remain lit at this point, this is normal. Drive the vehicle at 12 km/h (7 MPH) or more in order to turn off the ABS warning light, and the VDC warning light & VDC indicator light. Be sure to drive the vehicle and check that the warning light goes off.

AF:DTC C0054 BLS OFF MALFUNCTION

DTC DETECTING CONDITION:

Defective stop light switch

TROUBLE SYMPTOM:

- VDC does not operate.
- Hill start assist does not operate.

WIRING DIAGRAM:

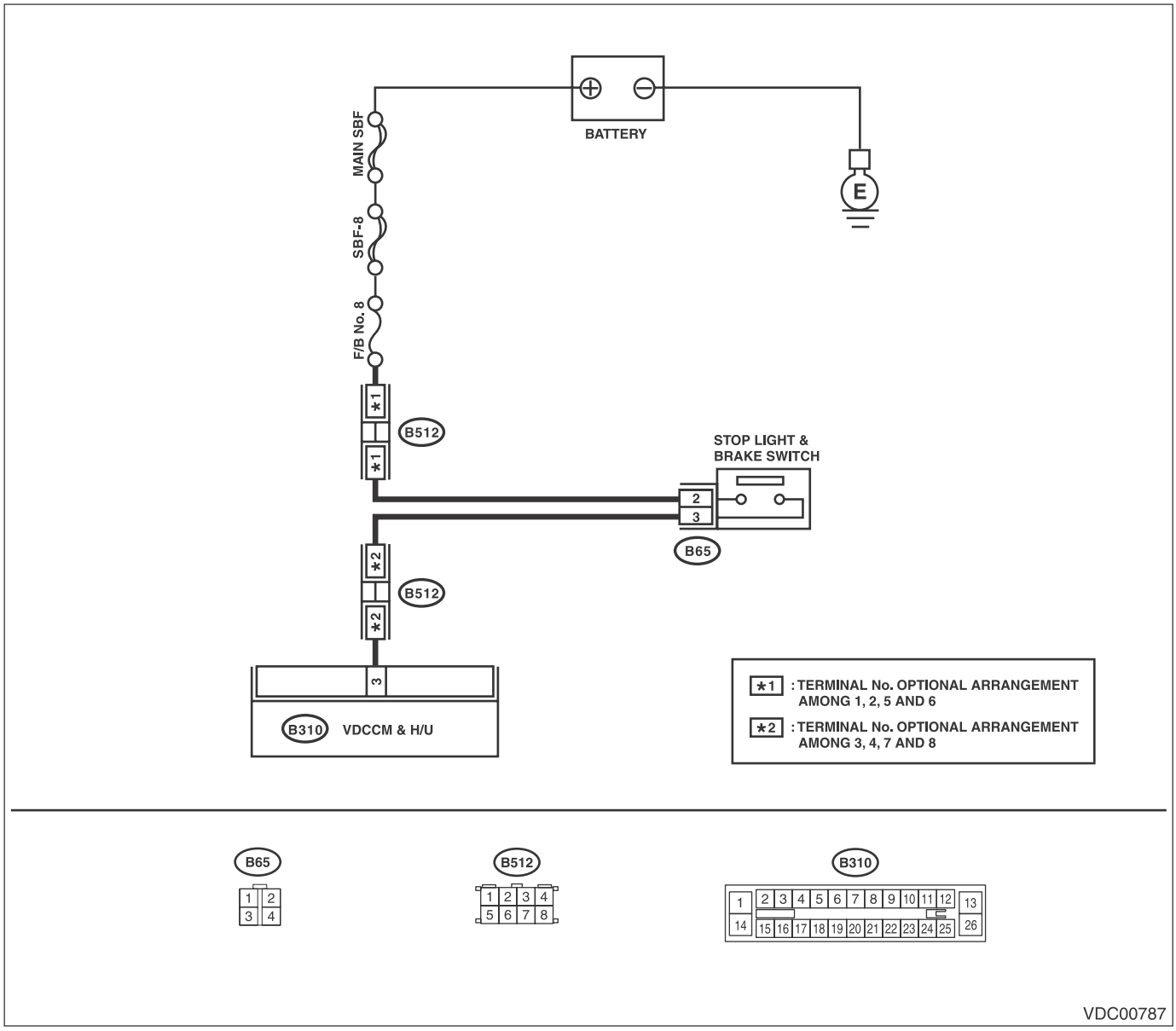

Step		Check	Yes	No
1	**CHECK STOP LIGHT SWITCH.** 1) Turn the ignition switch to OFF. 2) Disconnect the stop light switch connector. 3) Measure the resistance of stop light switch terminals. ***Terminals*** ***No. 2 — No. 3:***	Is the resistance 1 Ω or less when the switch is ON (when pedal is depressed)?	Go to step **2**.	Replace the stop light switch. <Ref. to BR-41, Stop Light Switch.>

	Step	Check	Yes	No
2	**CHECK STOP LIGHT POWER SUPPLY.** Measure the voltage between stop light switch terminal and chassis ground. ***Connector & terminal*** ***(B65) No. 2 (+) — Chassis ground (–):***	Is the voltage 10 — 15 V?	Go to step **3**.	Repair the stop light power supply circuit.
3	**CHECK STOP LIGHT SWITCH HARNESS.** 1) Disconnect the connector from the VDCCM&H/U. 2) Measure the resistance between VDCCM&H/U and stop light switch. ***Connector & terminal*** ***(B65) No. 3 — (B310) No. 3:***	Is the resistance less than 1 Ω?	Go to step **4**.	Repair the stop light switch circuit.
4	**CHECK POOR CONTACT OF CONNECTORS.**	Is there poor contact of connector between stop light switch and VDCCM&H/U?	Repair the connector.	Go to step **5**.
5	**CHECK VDCCM&H/U.** 1) Connect all connectors. 2) Clear the memory. <Ref. to VDC(diag)-25, Clear Memory Mode.> 3) Perform the Inspection Mode. <Ref. to VDC(diag)-24, Inspection Mode.> 4) Read the DTC.	Is the same DTC displayed?	Replace the VDCCM&H/U. <Ref. to VDC-7, VDC Control Module and Hydraulic Control Unit (VDCCM&H/U).>	Go to step **6**.
6	**CHECK OTHER DTC DETECTION.**	Is any other DTC displayed?	Perform the diagnosis according to DTC. <Ref. to VDC(diag)-35, List of Diagnostic Trouble Code (DTC).>	Temporary poor contact occurs.

AG:DTC C0054 BLS ON MALFUNCTION

DTC DETECTING CONDITION:
Defective stop light switch
TROUBLE SYMPTOM:
- VDC does not operate.
- Hill start assist does not operate.

WIRING DIAGRAM:

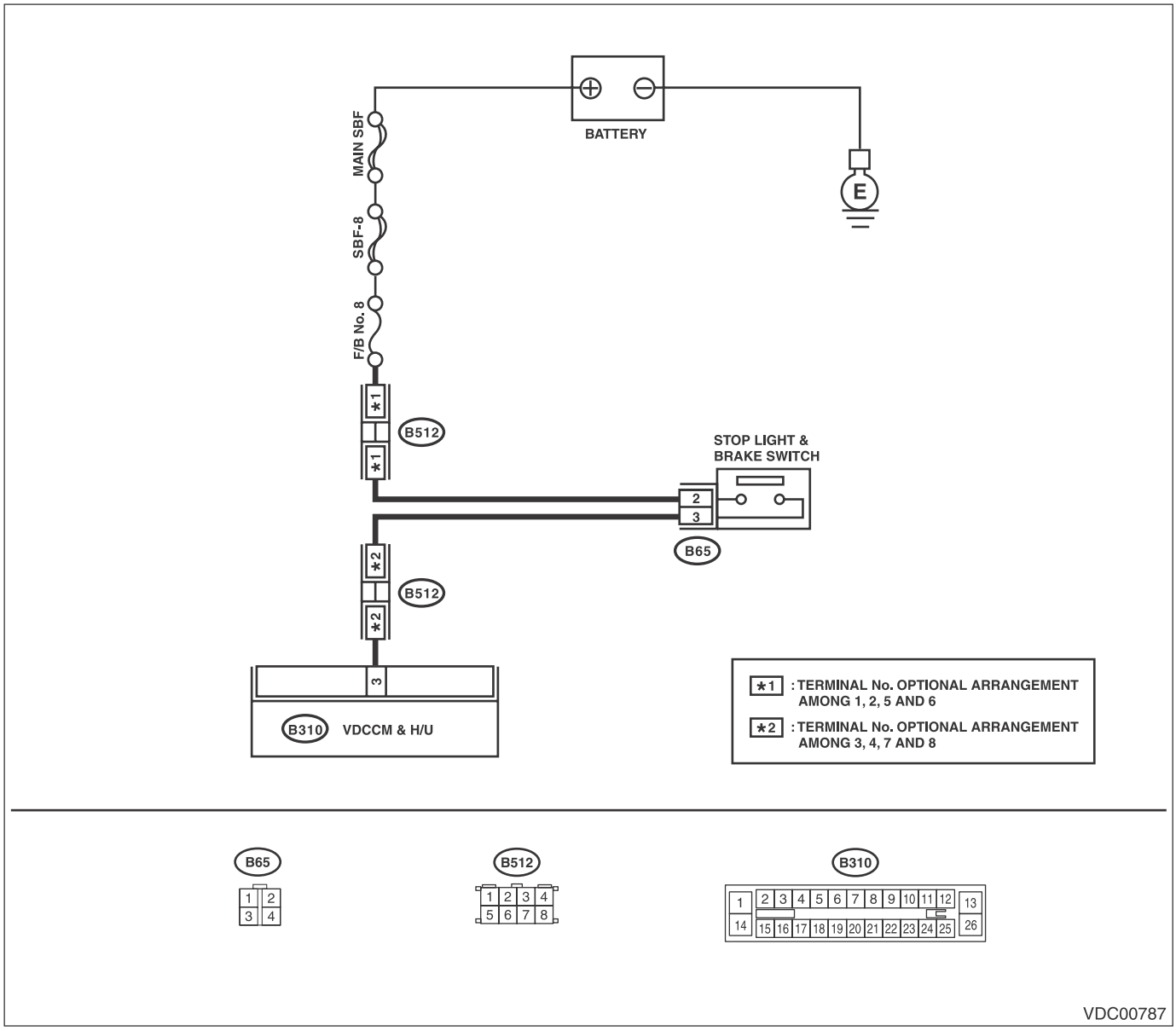

Step		Check	Yes	No
1	**CHECK STOP LIGHT SWITCH.** 1) Turn the ignition switch to OFF. 2) Disconnect the stop light switch connector. 3) Measure the resistance of stop light switch terminals. ***Terminals*** ***No. 2 — No. 3:***	Is the resistance 1 MΩ or more when switch is OFF (when pedal is not depressed)?	Go to step **2.**	Replace the stop light switch. <Ref. to BR-41, Stop Light Switch.>

	Step	Check	Yes	No
2	**CHECK STOP LIGHT SWITCH HARNESS.** 1) Disconnect the connector from the VDCCM&H/U. 2) Measure the resistance between VDCCM&H/U connector and chassis ground. ***Connector & terminal*** ***(B310) No. 3 — Chassis ground:***	Is the resistance less than 1 MΩ?	Go to step **3**.	Repair the stop light switch circuit.
3	**INTERVIEW CUSTOMERS.** Make sure that the operation was performed in which accelerator pedal and brake pedal were depressed simultaneously (with depressing brake pedal with left foot).	Were the acceleration pedal and brake pedal depressed simultaneously?	System is normal. (DTC may be recorded while brake is applied during driving.)	Go to step **4**.
4	**CHECK VDCCM&H/U.** 1) Connect all connectors. 2) Clear the memory. <Ref. to VDC(diag)-25, Clear Memory Mode.> 3) Perform the Inspection Mode. <Ref. to VDC(diag)-24, Inspection Mode.> 4) Read the DTC.	Is the same DTC displayed?	Replace the VDCCM&H/U. <Ref. to VDC-7, VDC Control Module and Hydraulic Control Unit (VDCCM&H/U).>	Go to step **5**.
5	**CHECK OTHER DTC DETECTION.**	Is any other DTC displayed?	Perform the diagnosis according to DTC. <Ref. to VDC(diag)-35, List of Diagnostic Trouble Code (DTC).>	Temporary poor contact occurs.

AH:DTC C0056 G SENSOR FAILURE

DTC DETECTING CONDITION:

Longitudinal G sensor signal failure

TROUBLE SYMPTOM:

- ABS does not operate.
- VDC does not operate.
- Hill start assist does not operate.

NOTE:

For the diagnostic procedure, refer to DTC C0056 “G SENSOR SIGNAL”. <Ref. to VDC(diag)-71, DTC C0056 G SENSOR SIGNAL, Diagnostic Procedure with Diagnostic Trouble Code (DTC).>

AI: DTC C0056 G SENSOR SIGNAL

DTC DETECTING CONDITION:
Longitudinal G sensor signal failure
TROUBLE SYMPTOM:
- ABS does not operate.
- VDC does not operate.
- Hill start assist does not operate.

	Step	Check	Yes	No
1	**CHECK INSTALLATION OF VDCCM&H/U.**	Is VDCCM&H/U installed properly without being tilted? Is the bracket deformation-free? Are the VDCCM&H/U installation bolts installed without missing or getting loose?	Go to step **2.**	Repair the fault location. Go to step **2.** • Install VDCCM&H/U properly. • Replace the bracket if faulty. • Tighten the VDCCM&H/U installation bolt. <Ref. to VDC-5, VDC CONTROL MODULE & HYDRAULIC CONTROL UNIT (VDCCM&H/U), COMPONENT, General Description.>
2	**CHECK OUTPUT OF LONGITUDINAL G SENSOR USING SUBARU SELECT MONITOR.** 1) Park the vehicle on a level surface. 2) Connect Subaru Select Monitor, and select {Current Data Display & Save}. 3) Read the longitudinal G sensor output displayed on the screen.	Is the indicated reading of the longitudinal G sensor on the monitor display –2 — 2 m/s^2?	Go to step **3.**	Recheck from step 1, and if the problem is not solved, go to next. Go to step **6.**
3	**SET 0 POINT FOR LONGITUDINAL G SENSOR USING SUBARU SELECT MONITOR.** 1) Select “Function Check Sequence” on Subaru Select Monitor. 2) Perform the “Longitudinal G sensor & lateral G sensor 0 point setting mode”. <Ref. to VDC-11, LONGITUDINAL G SENSOR & LATERAL G SENSOR 0 POINT SETTING MODE, ADJUSTMENT, VDC Control Module and Hydraulic Control Unit (VDCCM&H/U).>	Is the 0 point setting successful?	Go to step **4.**	Recheck from step 1, and when the 0 point setting is not possible, replace the VDCCM&H/U. <Ref. to VDC-7, VDC Control Module and Hydraulic Control Unit (VDCCM&H/U).>
4	**PERFORM DRIVING TEST.** Drive approximately 10 minutes, and check if the warning lights illuminate or improperly operate during driving. In a safe place, drive the vehicle while alternating acceleration and deceleration as much as possible.	Did the ABS warning light or VDC warning light remain off? Does ABS or VDC operate without malfunction?	Go to step **5.**	Recheck from step 1, and when the warning lights illuminate or improperly operate, replace the VDCCM&H/U. <Ref. to VDC-7, VDC Control Module and Hydraulic Control Unit (VDCCM&H/U).>

	Step	Check	Yes	No
5	**CHECK OUTPUT OF LONGITUDINAL G SENSOR USING SUBARU SELECT MONITOR.** 1) Park the vehicle on a level surface. 2) Connect Subaru Select Monitor, and select {Current Data Display & Save}. 3) Read the longitudinal G sensor output displayed on the screen.	Is the indicated reading of the longitudinal G sensor on the monitor display –1.5 — 1.5 m/s^2?	End. It results from a temporary noise interference.	Replace the VDCCM&H/U. <Ref. to VDC-7, VDC Control Module and Hydraulic Control Unit (VDCCM&H/U).>
6	**CHECK OUTPUT OF LONGITUDINAL G SENSOR USING SUBARU SELECT MONITOR.** 1) Remove the VDCCM&H/U installation bolt and bracket. 2) Keep VDCCM&H/U in a horizontal position. 3) Connect Subaru Select Monitor, and select {Current Data Display & Save}. 4) Read the longitudinal G sensor output displayed on the screen.	When the VDCCM&H/U is in a horizontal position, is the indicated reading of the longitudinal G sensor on the monitor display –1.5 — 1.5 m/s^2?	Check the bracket and brake pipe, and install VDCCM&H/U in a horizontal position to the vehicle.	Replace the VDCCM&H/U. <Ref. to VDC-7, VDC Control Module and Hydraulic Control Unit (VDCCM&H/U).>

AJ:DTC C0057 ECM COMMUNICATION CIRCUIT

DTC DETECTING CONDITION:

No CAN signal from ECM.

TROUBLE SYMPTOM:

- VDC does not operate.
- Hill start assist does not operate.

	Step	Check	Yes	No
1	**CHECK LAN SYSTEM.** Perform the diagnosis for LAN system. <Ref. to LAN(diag)-10, OPERATION, Read Diagnostic Trouble Code (DTC).>	Is there any fault in LAN system?	Perform the diagnosis according to DTC for LAN system. <Ref. to LAN(diag)-31, List of Diagnostic Trouble Code (DTC).>	Go to step **2**.
2	**CHECK POOR CONTACT OF CONNECTORS.**	Is there poor contact of ECM connector?	Repair the connector.	Go to step **3**.
3	**CHECK ECM.**	Is ECM normal?	Go to step **4**.	Replace the ECM. <Ref. to FU(H4SO)-39, Engine Control Module (ECM).> <Ref. to FU(H4DOTC)-57, Engine Control Module (ECM).> <Ref. to FU(H6DO)-50, Engine Control Module (ECM).>
4	**CHECK VDCCM&H/U.** 1) Connect all connectors. 2) Clear the memory. <Ref. to VDC(diag)-25, Clear Memory Mode.> 3) Perform the Inspection Mode. <Ref. to VDC(diag)-24, Inspection Mode.> 4) Read the DTC.	Is the same DTC displayed?	Replace the VDCCM&H/U. <Ref. to VDC-7, VDC Control Module and Hydraulic Control Unit (VDCCM&H/U).>	Go to step **5**.
5	**CHECK OTHER DTC DETECTION.**	Is any other DTC displayed?	Perform the diagnosis according to DTC. <Ref. to VDC(diag)-35, List of Diagnostic Trouble Code (DTC).>	It results from a temporary noise interference.

AK:DTC C0057 ECM CONTROL SYSTEM

DTC DETECTING CONDITION:
ECM malfunctioning
TROUBLE SYMPTOM:
- VDC does not operate.
- Hill start assist does not operate.

	Step	Check	Yes	No
1	**CHECK COOPERATION CONTROL FEASIBILITY OF ECM USING SUBARU SELECT MONITOR.** 1) Start the engine, and run the engine at idle approximately 5 minutes. 2) Connect Subaru Select Monitor, and select {Current Data Display & Save}. 3) Check the E/G Control Stop Flag displayed on screen.	Is the E/G Control Stop Flag "1"?	Go to step **4**.	Go to step **2**.
2	**CHECK WARNING LIGHT.** Check whether the VDC warning light illuminates after driving for 1 minute or more at a speed of 10 km/h or more.	Does the VDC warning light illuminate?	Go to step **3**.	VDC is normal. Perform the Clear Memory Mode. NOTE: DTC may be recorded if cranking is performed during driving.
3	**CHECK POOR CONTACT OF CONNECTORS.**	Is there poor contact of ECM connector?	Repair the connector.	Go to step **4**.
4	**CHECK ECM.**	Is ECM normal?	Go to step **5**.	Replace the ECM. <Ref. to FU(H4SO)-39, Engine Control Module (ECM).> <Ref. to FU(H4DOTC)-57, Engine Control Module (ECM).> <Ref. to FU(H6DO)-50, Engine Control Module (ECM).>
5	**CHECK VDCCM&H/U.** 1) Connect all connectors. 2) Clear the memory. <Ref. to VDC(diag)-25, Clear Memory Mode.> 3) Perform the Inspection Mode. <Ref. to VDC(diag)-24, Inspection Mode.> 4) Read the DTC.	Is the same DTC displayed?	Replace the VDCCM&H/U. <Ref. to VDC-7, VDC Control Module and Hydraulic Control Unit (VDCCM&H/U).>	Go to step **6**.
6	**CHECK OTHER DTC DETECTION.**	Is any other DTC displayed?	Perform the diagnosis according to DTC. <Ref. to VDC(diag)-35, List of Diagnostic Trouble Code (DTC).>	It results from a temporary noise interference.

AL:DTC C0057 VDC INTERUPTED DUE TO EGI REASON

DTC DETECTING CONDITION:

Cooperation control prohibition of ECM

TROUBLE SYMPTOM:

- VDC does not operate.
- Hill start assist does not operate.

NOTE:

- For the diagnostic procedure, refer to DTC C0057 “ECM CONTROL SYSTEM”. <Ref. to VDC(diag)-73, DTC C0057 ECM COMMUNICATION CIRCUIT, Diagnostic Procedure with Diagnostic Trouble Code (DTC).>
- Warning lights go off if the cooperation control of ECM returns.

AM:DTC C0071 NO SIGNAL FROM STEERING ANGLE SENSOR

DTC DETECTING CONDITION:

Communication from steering angle sensor is faulty.

TROUBLE SYMPTOM:

- VDC does not operate.
- Hill start assist does not operate.

WIRING DIAGRAM:

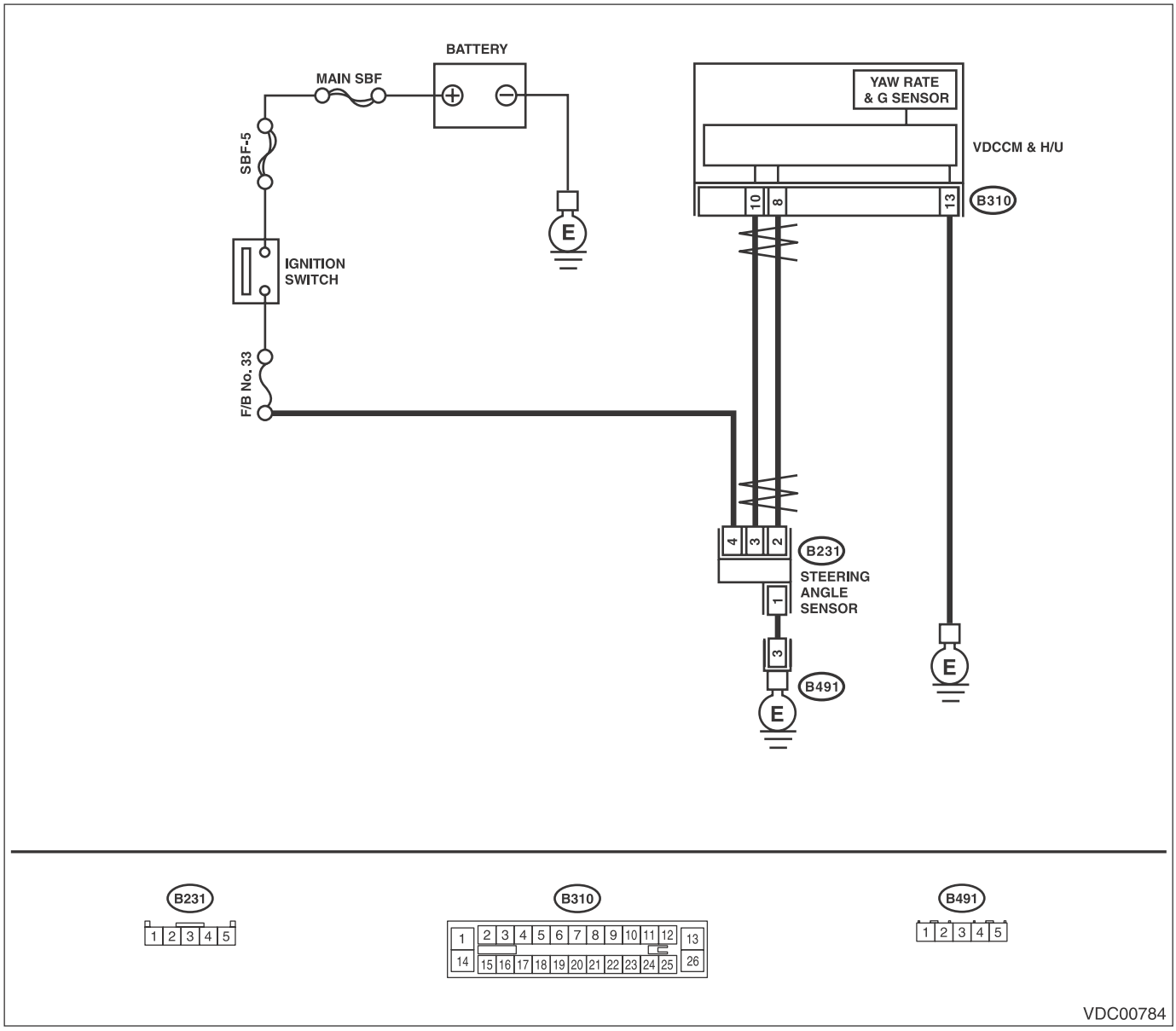

Step		Check	Yes	No
1	**CHECK POWER SUPPLY FOR STEERING ANGLE SENSOR.** 1) Turn the ignition switch to OFF. 2) Disconnect the connector from steering angle sensor. 3) Turn the ignition switch to ON. 4) Measure the voltage between steering angle sensor and chassis ground. ***Connector & terminal*** ***(B231) No. 4 (+) — Chassis ground (–):***	Is the voltage 10 — 15 V?	Go to step **2**.	Repair the steering angle sensor power supply circuit.

	Step	Check	Yes	No
2	**CHECK GROUND CIRCUIT OF STEERING ANGLE SENSOR.** Measure the resistance between steering angle sensor and chassis ground. ***Connector & terminal*** ***(B231) No. 1 — Chassis ground:***	Is the resistance less than 10 Ω?	Go to step **3**.	Repair ground circuit in the steering angle sensor.
3	**CHECK STEERING ANGLE SENSOR.** 1) Turn the ignition switch to OFF. 2) Connect all connectors. 3) Clear the memory. <Ref. to VDC(diag)-25, Clear Memory Mode.> 4) Perform the Inspection Mode. <Ref. to VDC(diag)-24, Inspection Mode.> 5) Read the DTC.	Is the same DTC displayed?	Go to step **4**.	Go to step **5**.
4	**CHECK VDCCM&H/U.** 1) Turn the ignition switch to OFF. 2) Replace the steering angle sensor. <Ref. to VDC-19, Steering Angle Sensor.> 3) Clear the memory. <Ref. to VDC(diag)-25, Clear Memory Mode.> 4) Perform the Inspection Mode. <Ref. to VDC(diag)-24, Inspection Mode.> 5) Read the DTC.	Is the same DTC displayed?	Replace the VDCCM&H/U. <Ref. to VDC-7, VDC Control Module and Hydraulic Control Unit (VDCCM&H/U).>	Go to step **6**.
5	**CHECK OTHER DTC DETECTION.**	Is any other DTC displayed?	Perform the diagnosis according to DTC. <Ref. to VDC(diag)-35, List of Diagnostic Trouble Code (DTC).>	Temporary poor contact occurs. Though VDC warning light may remain lit, this is normal. Warning light goes off when the vehicle is driven at 12 km/h (7 MPH) or more.
6	**CHECK OTHER DTC DETECTION.**	Is any other DTC displayed?	Perform the diagnosis according to DTC. <Ref. to VDC(diag)-35, List of Diagnostic Trouble Code (DTC).>	Original steering angle sensor malfunction

AN:DTC C0071 STEER ANGLE SENSOR OP

DTC DETECTING CONDITION:
Steering angle sensor output is faulty.
TROUBLE SYMPTOM:
- VDC does not operate.
- Hill start assist does not operate.

WIRING DIAGRAM:

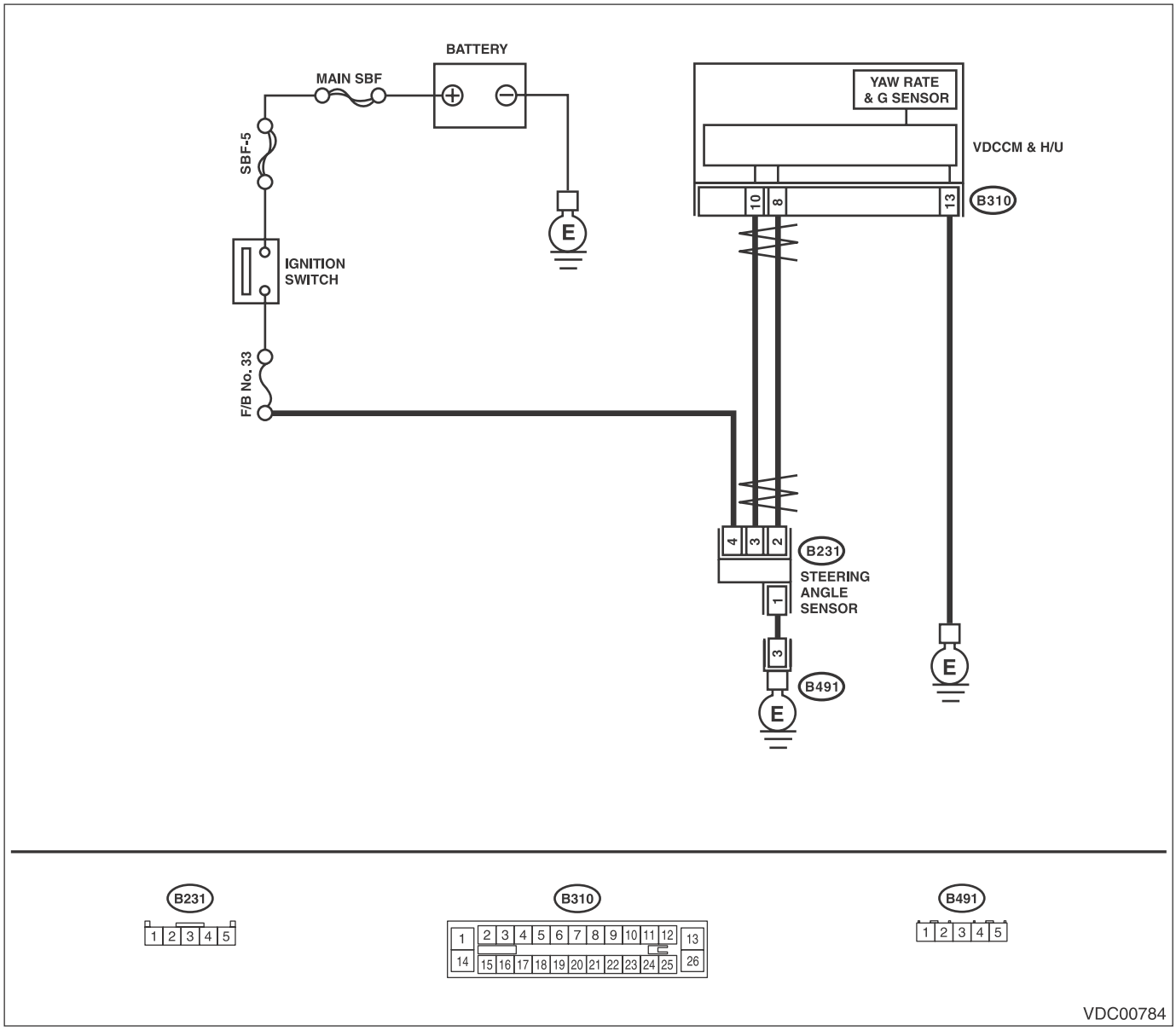

Step		Check	Yes	No
1	**CHECK POWER SUPPLY FOR STEERING ANGLE SENSOR.** 1) Turn the ignition switch to OFF. 2) Disconnect the connector from steering angle sensor. 3) Turn the ignition switch to ON. 4) Measure the voltage between steering angle sensor and chassis ground. ***Connector & terminal*** ***(B231) No. 4 (+) — Chassis ground (–):***	Is the voltage 10 — 15 V?	Go to step **2**.	Repair the steering angle sensor power supply circuit.

	Step	Check	Yes	No
2	**CHECK GROUND CIRCUIT OF STEERING ANGLE SENSOR.** Measure the resistance between steering angle sensor and chassis ground. ***Connector & terminal*** ***(B231) No. 1 — Chassis ground:***	Is the resistance less than 10 Ω?	Go to step **3**.	Repair ground circuit in the steering angle sensor.
3	**CHECK STEERING ANGLE SENSOR HARNESS.** 1) Disconnect the connector from the VDCCM&H/U. 2) Measure the resistance between VDCCM&H/U and steering angel sensor. ***Connector & terminal*** ***(B231) No. 2 — (B310) No. 8:*** ***(B231) No. 3 — (B310) No. 10:***	Is the resistance less than 1 Ω?	Go to step **4**.	Repair the harness between the steering angle sensor and VDCCM&H/U.
4	**CHECK GROUND SHORT CIRCUIT OF STEERING ANGLE SENSOR HARNESS.** Measure the resistance between steering angle sensor and chassis ground. ***Connector & terminal*** ***(B231) No. 2 — Chassis ground:*** ***(B231) No. 3 — Chassis ground:***	Is the resistance 1 MΩ or more?	Go to step **5**.	Repair the harness between the steering angle sensor and VDCCM&H/U.
5	**CHECK STEERING WHEEL.** 1) Drive the vehicle on a flat road. 2) Park the vehicle straight. 3) Check the steering wheel for deviation from center.	Is the deviation from the center of steering wheel less than 5°?	Go to step **6**.	Perform the centering adjustment of steering wheel, and perform Set up mode for Neutral of Steering Angle Sensor & Lateral G Sensor 0 point. <Ref. to VDC-10, SET UP MODE FOR NEUTRAL OF STEERING ANGLE SENSOR & LATERAL G SENSOR 0 POINT, ADJUSTMENT, VDC Control Module and Hydraulic Control Unit (VDCCM&H/U).>
6	**CHECK STEERING ANGLE SENSOR OUTPUT.** 1) Adjust steering wheel to the center position. 2) Connect Subaru Select Monitor, and select {Current Data Display & Save}. 3) Read the steering angle sensor output displayed on display.	Is the indicated reading of the steering angle sensor output on the monitor display –10° — 10°?	Perform Set up mode for Neutral of Steering Angle Sensor & Lateral G Sensor 0 point. Go to step **7**. <Ref. to VDC-10, SET UP MODE FOR NEUTRAL OF STEERING ANGLE SENSOR & LATERAL G SENSOR 0 POINT, ADJUSTMENT, VDC Control Module and Hydraulic Control Unit (VDCCM&H/U).>	Check the installation of the steering wheel and steering angle sensor.

Step		Check	Yes	No
7	**CHECK STEERING ANGLE SENSOR USING SUBARU SELECT MONITOR.** 1) Turn the ignition switch to OFF. 2) Connect all connectors. 3) Clear the memory. <Ref. to VDC(diag)-25, Clear Memory Mode.> 4) Perform the Inspection Mode. <Ref. to VDC(diag)-24, Inspection Mode.> 5) Read the DTC.	Is the same DTC displayed?	Go to step **8**.	Go to step **9**.
8	**CHECK VDCCM&H/U.** 1) Turn the ignition switch to OFF. 2) Replace the steering angle sensor. <Ref. to VDC-19, Steering Angle Sensor.> 3) Clear the memory. <Ref. to VDC(diag)-25, Clear Memory Mode.> 4) Perform the Inspection Mode. <Ref. to VDC(diag)-24, Inspection Mode.> 5) Read the DTC.	Is the same DTC displayed?	Replace the VDCCM&H/U. <Ref. to VDC-7, VDC Control Module and Hydraulic Control Unit (VDCCM&H/U).>	Go to step **10**.
9	**CHECK OTHER DTC DETECTION.**	Is any other DTC displayed?	Perform the diagnosis according to DTC. <Ref. to VDC(diag)-35, List of Diagnostic Trouble Code (DTC).>	Temporary poor contact occurs. Though VDC warning light may remain lit, this is normal. Warning light goes off when the vehicle is driven at 12 km/h (7 MPH) or more.
10	**CHECK OTHER DTC DETECTION.**	Is any other DTC displayed?	Perform the diagnosis according to DTC. <Ref. to VDC(diag)-35, List of Diagnostic Trouble Code (DTC).>	Original steering angle sensor malfunction

AO:DTC C0072 ABNORMAL YAW RATE SENSOR OUTPUT

DTC DETECTING CONDITION:

Defective yaw rate sensor

TROUBLE SYMPTOM:

- VDC does not operate.
- Hill start assist does not operate.

WIRING DIAGRAM:

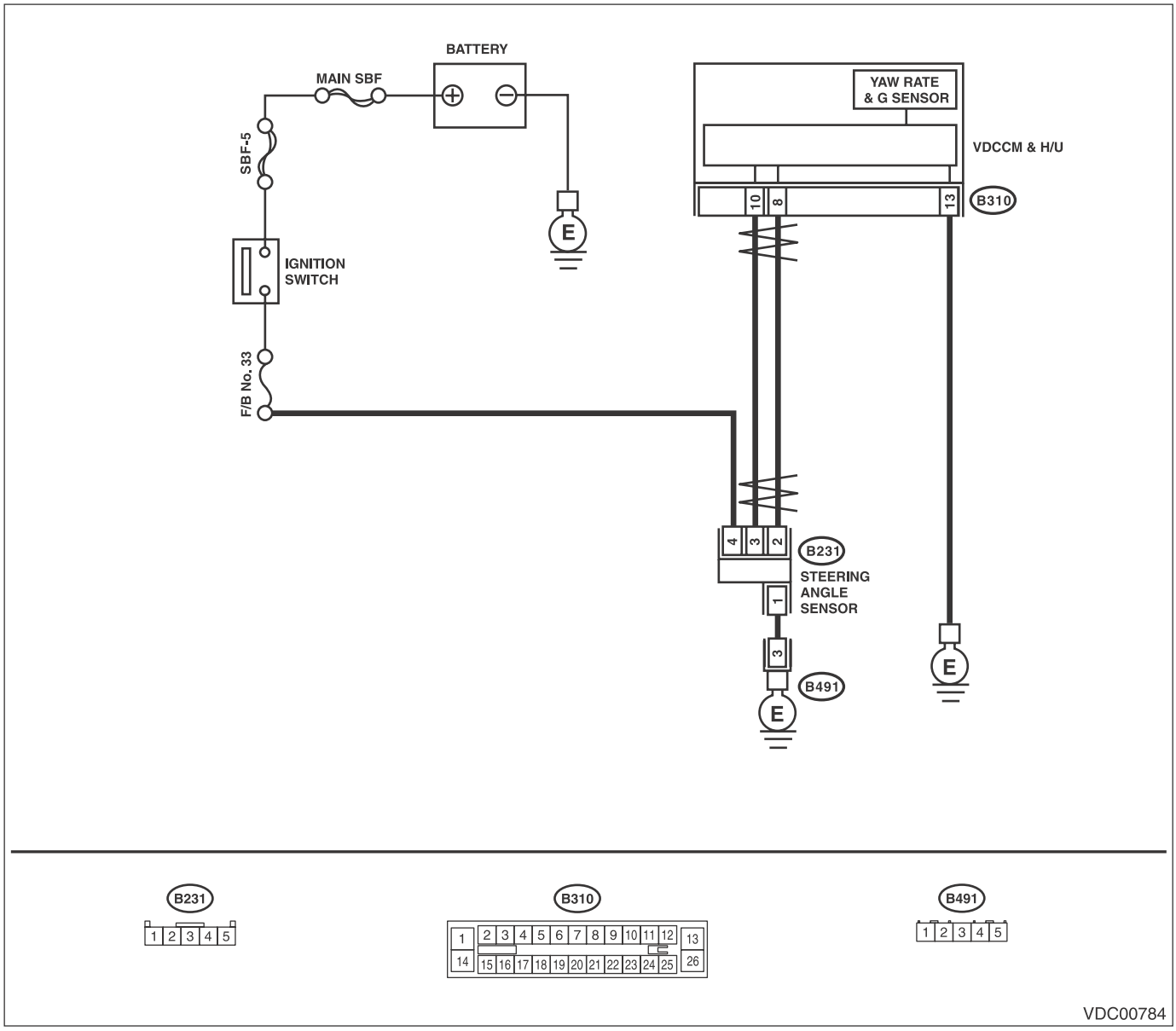

Step		Check	Yes	No
1	**INTERVIEW CUSTOMERS.** Check if the vehicle ran the road with banks or sandy surface (which does not mean a dirt road).	Did the vehicle run the road with banks or sandy surface (which does not mean a dirt road)?	VDCCM&H/U may record DTC when the vehicle ran the road with banks or sandy surface (which does not mean a dirt road).	Go to step **2**.

	Step	Check	Yes	No
2	**CHECK INSTALLATION OF VDCCM&H/U.**	Is VDCCM&H/U installed properly without being tilted? Is the bracket deformation-free? Are the VDCCM&H/U installation bolts installed without missing or getting loose?	Go to step **3**.	Repair the fault location. Go to step **3**. • Install VDCCM&H/U properly. • Replace the bracket if faulty. • Tighten the VDCCM&H/U installation bolt. <Ref. to VDC-5, VDC CONTROL MODULE & HYDRAULIC CONTROL UNIT (VDCCM&H/U), COMPONENT, General Description.>
3	**CHECK OUTPUT OF YAW RATE & G SENSOR WITH SUBARU SELECT MONITOR.** 1) Drive the vehicle on a flat road. 2) Park the vehicle straight. 3) Select {Current Data Display & Save} in Subaru Select Monitor. 4) Read the yaw rate output displayed on display.	Is the reading indicated on monitor display –4 — 4 deg/s?	Go to step **4**.	Replace the VDCCM&H/U. <Ref. to VDC-7, VDC Control Module and Hydraulic Control Unit (VDCCM&H/U).>
4	**CHECK OUTPUT OF STEERING ANGLE SENSOR WITH SUBARU SELECT MONITOR.** 1) Drive the vehicle on a flat road. 2) Park the vehicle straight. 3) Select {Current Data Display & Save} in Subaru Select Monitor. 4) Read the steering angle sensor output displayed on display.	Is the reading indicated on monitor display –5 — 5°?	Go to step **5**.	Perform the centering adjustment of steering wheel.
5	**CHECK VDCCM&H/U.** 1) Turn the ignition switch to OFF. 2) Clear the memory. <Ref. to VDC(diag)-25, Clear Memory Mode.> 3) Perform the Inspection Mode. <Ref. to VDC(diag)-24, Inspection Mode.> 4) Read the DTC.	Is the same DTC displayed?	Replace the VDCCM&H/U. <Ref. to VDC-7, VDC Control Module and Hydraulic Control Unit (VDCCM&H/U).>	Go to step **6**.
6	**CHECK OTHER DTC DETECTION.**	Is any other DTC displayed?	Perform the diagnosis according to DTC. <Ref. to VDC(diag)-35, List of Diagnostic Trouble Code (DTC).>	It results from a temporary noise interference. Though VDC warning light may remain lit, this is normal. Warning light goes off when the vehicle is driven at 12 km/h (7 MPH) or more.

AP:DTC C0073 LATERAL G SENSOR POWER/OUTPUT

NOTE:
For the diagnostic procedure, refer to DTC C0073 “ABNORMAL LATERAL G SENSOR OUTPUT”. <Ref. to VDC(diag)-83, DTC C0073 ABNORMAL LATERAL G SENSOR OUTPUT, Diagnostic Procedure with Diagnostic Trouble Code (DTC).>

AQ:DTC C0073 ABNORMAL LATERAL G SENSOR OUTPUT

DTC DETECTING CONDITION:

Defective lateral G sensor

TROUBLE SYMPTOM:

- VDC does not operate.
- Hill start assist does not operate.

WIRING DIAGRAM:

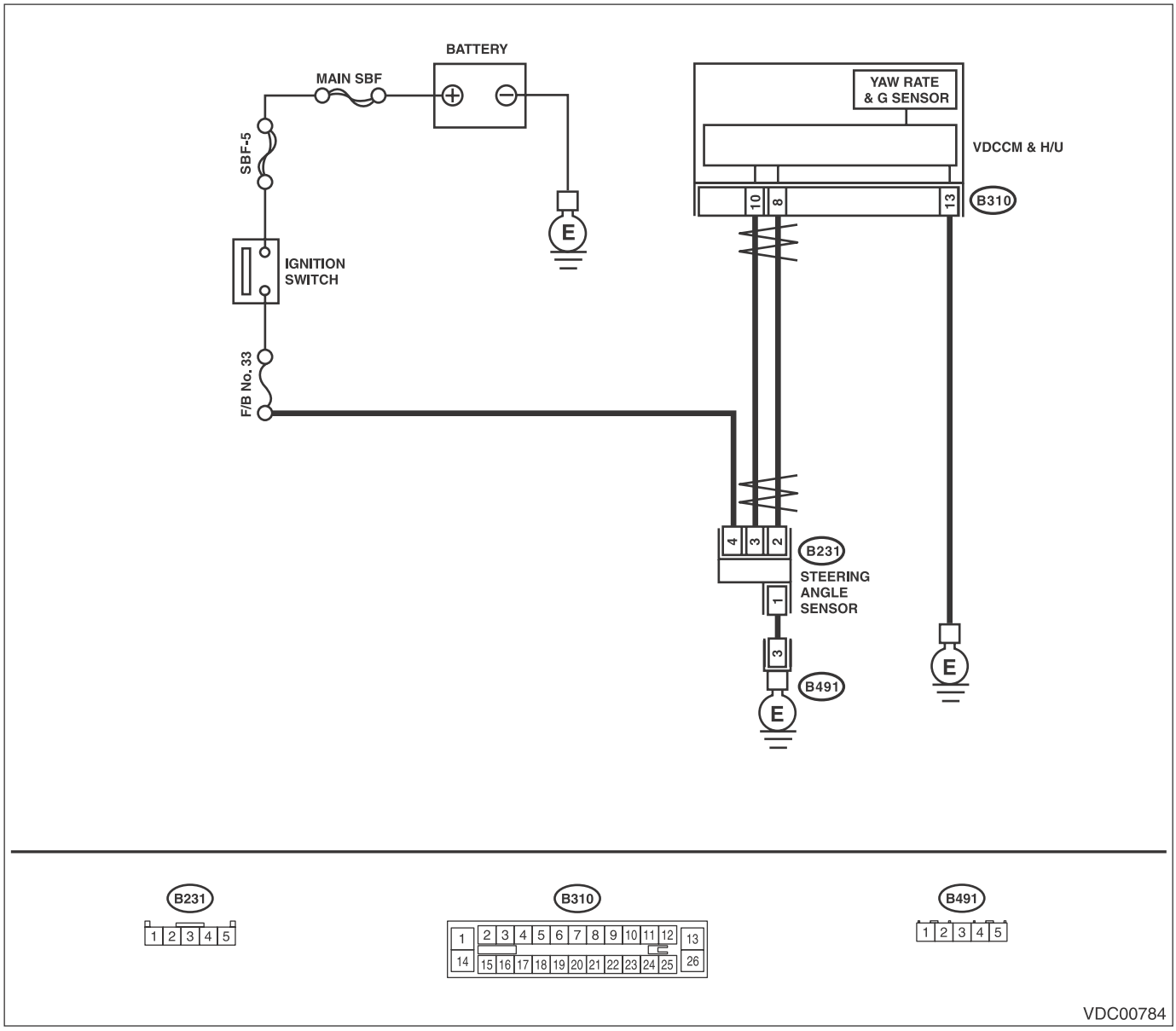

	Step	Check	Yes	No
1	**CHECK INSTALLATION OF VDCCM&H/U.**	Is VDCCM&H/U installed properly without being tilted? Is the bracket deformation-free? Are the VDCCM&H/U installation bolts installed without missing or getting loose?	Go to step **2**.	Repair the fault location. Go to step **2**. • Install VDCCM&H/U properly. • Replace the bracket if faulty. • Tighten the VDCCM&H/U installation bolt. <Ref. to VDC-5, VDC CONTROL MODULE & HYDRAULIC CONTROL UNIT (VDCCM&H/U), COMPONENT, General Description.>
2	**CHECK OUTPUT OF STEERING ANGLE SENSOR USING SUBARU SELECT MONITOR.** 1) Park the vehicle straight on a level surface. 2) Connect Subaru Select Monitor, and select {Current Data Display & Save}. 3) Read the steering angle sensor output displayed on display.	Is the indicated reading of the steering angle sensor on the monitor display –10° — 10°?	Go to step **3**.	Check the installation of steering angle sensor.
3	**CHECK OUTPUT OF LATERAL G SENSOR WITH SUBARU SELECT MONITOR.** 1) Park the vehicle straight on a level surface. 2) Connect Subaru Select Monitor, and select {Current Data Display & Save}. 3) Read the lateral G sensor output displayed on display.	Is the indicated reading of the lateral G sensor on the monitor display –2 — 2 m/s^2?	Go to step **4**.	Recheck from step 1, and if the problem is not solved, go to next. Go to step **7**.
4	**SET 0 POINT FOR LATERAL G SENSOR USING SUBARU SELECT MONITOR.** 1) Select “Function Check Sequence” on Subaru Select Monitor. 2) Perform Set up mode for Neutral of Steering Angle Sensor & Lateral G Sensor 0 point. <Ref. to VDC-10, SET UP MODE FOR NEUTRAL OF STEERING ANGLE SENSOR & LATERAL G SENSOR 0 POINT, ADJUSTMENT, VDC Control Module and Hydraulic Control Unit (VDCCM&H/U).>	Is the 0 point setting successful?	Go to step **5**.	Recheck from step 1, and when the 0 point setting is not possible, replace the VDCCM&H/U. <Ref. to VDC-7, VDC Control Module and Hydraulic Control Unit (VDCCM&H/U).>
5	**PERFORM DRIVING TEST.** Drive approximately 10 minutes, and check if the warning lights illuminate or improperly operate during driving. In a safe place, drive the vehicle while alternating acceleration and deceleration as much as possible.	Did the ABS warning light or VDC warning light remain off? Does ABS or VDC operate without malfunction?	Go to step **6**.	Recheck from step 1, and when the warning lights illuminate or improperly operate, replace the VDCCM&H/U. <Ref. to VDC-7, VDC Control Module and Hydraulic Control Unit (VDCCM&H/U).>

	Step	Check	Yes	No
6	**CHECK OUTPUT OF LATERAL G SENSOR WITH SUBARU SELECT MONITOR.** 1) Park the vehicle on a level surface. 2) Connect Subaru Select Monitor, and select {Current Data Display & Save}. 3) Read the longitudinal G sensor output displayed on the screen.	Is the indicated reading of the lateral G sensor on the monitor display –1.5 — 1.5 m/s^2?	End. It results from a temporary noise interference. Though VDC warning light may remain lit, this is normal. Warning light goes off when the vehicle is driven at 12 km/h (7 MPH) or more.	Recheck from step 1, and if the problem is not solved, replace the VDCCM&H/U. <Ref. to VDC-7, VDC Control Module and Hydraulic Control Unit (VDCCM&H/U).>
7	**CHECK OUTPUT OF LATERAL G SENSOR WITH SUBARU SELECT MONITOR.** 1) Remove the VDCCM&H/U installation bolt and bracket. 2) Keep VDCCM&H/U in a horizontal position. 3) Connect Subaru Select Monitor, and select {Current Data Display & Save}. 4) Read the lateral G sensor output displayed on display.	When the VDCCM&H/U is in a horizontal position, is the indicated reading of the lateral G sensor on the monitor display –1.5 — 1.5 m/s^2?	Check the bracket and brake pipe, and install VDCCM&H/U in a horizontal position to the vehicle.	Replace the VDCCM&H/U. <Ref. to VDC-7, VDC Control Module and Hydraulic Control Unit (VDCCM&H/U).>

AR:DTC C0074 MASTER CYLINDER PRESSURE SENSOR OUTPUT

DTC DETECTING CONDITION:
Defective pressure sensor
TROUBLE SYMPTOM:
- ABS does not operate.
- VDC does not operate.
- Hill start assist does not operate.

	Step	Check	Yes	No
1	**CHECK STOP LIGHT SWITCH CIRCUIT.** Check stop light switch open circuit.	Is the stop light switch circuit OK?	Go to step **2**.	Repair the stop light switch circuit. NOTE: If there is malfunction in the stop light circuit, DTC may be recorded in the memory.
2	**CHECK OUTPUT OF PRESSURE SENSOR WITH SUBARU SELECT MONITOR.** 1) Select {Current Data Display & Save} in Subaru Select Monitor. 2) Read the master cylinder output displayed on display.	With the brake pedal released, is the displayed value 0 — 11 bar?	Go to step **3**.	Replace the VDCCM&H/U. <Ref. to VDC-7, VDC Control Module and Hydraulic Control Unit (VDCCM&H/U).>
3	**CHECK OUTPUT OF PRESSURE SENSOR WITH SUBARU SELECT MONITOR.** 1) Select {Current Data Display & Save} in Subaru Select Monitor. 2) Read the master cylinder output displayed on display.	When the brake pedal is operated, does the master cylinder output value displayed on the display change in accordance with the brake pedal?	Go to step **4**.	Replace the VDCCM&H/U. <Ref. to VDC-7, VDC Control Module and Hydraulic Control Unit (VDCCM&H/U).>
4	**CHECK PRESSURE SENSOR.** 1) Clear the memory. <Ref. to VDC(diag)-25, Clear Memory Mode.> 2) Perform the Inspection Mode. <Ref. to VDC(diag)-24, Inspection Mode.> 3) Read the DTC.	Is the same DTC displayed?	Replace the VDCCM&H/U. <Ref. to VDC-7, VDC Control Module and Hydraulic Control Unit (VDCCM&H/U).>	Go to step **5**.
5	**CHECK OTHER DTC DETECTION.**	Is any other DTC displayed?	Perform the diagnosis according to DTC. <Ref. to VDC(diag)-35, List of Diagnostic Trouble Code (DTC).>	It results from a temporary noise interference.

AS:DTC C0075 WHEEL CYLINDER PRESSURE SENSOR OUTPUT

DTC DETECTING CONDITION:
Different VDCCM&H/U specification

NOTE:
When this DTC is displayed, replace the VDCCM&H/U. <Ref. to VDC-7, VDC Control Module and Hydraulic Control Unit (VDCCM&H/U).>

AT:DTC C0081 SYSTEM FAILURE

DTC DETECTING CONDITION:
VDC long time sequential control
TROUBLE SYMPTOM:
- VDC does not operate.
- Hill start assist does not operate.

	Step	Check	Yes	No
1	**CHECK INSTALLATION OF VDCCM&H/U.**	Is VDCCM&H/U installed properly without being tilted? Is the bracket deformation-free? Are the VDCCM&H/U installation bolts installed without missing or getting loose?	Go to step **2**.	Repair the fault location. Go to step **2**. • Install VDCCM&H/U properly. • Replace the bracket if faulty. • Tighten the VDCCM&H/U installation bolt. <Ref. to VDC-5, VDC CONTROL MODULE & HYDRAULIC CONTROL UNIT (VDCCM&H/U), COMPONENT, General Description.>
2	**CHECK STEERING WHEEL.** 1) Drive the vehicle on a flat road. 2) Park the vehicle straight. 3) Check the steering wheel for deviation from center.	Is the deviation from the center of steering wheel less than 5°?	Go to step **3**.	Perform the centering adjustment of steering wheel, and perform Set up mode for Neutral of Steering Angle Sensor & Lateral G Sensor 0 point. Go to step **3**. <Ref. to VDC-10, SET UP MODE FOR NEUTRAL OF STEERING ANGLE SENSOR & LATERAL G SENSOR 0 POINT, ADJUSTMENT, VDC Control Module and Hydraulic Control Unit (VDCCM&H/U).>
3	**CHECK OUTPUT OF STEERING ANGLE SENSOR USING SUBARU SELECT MONITOR.** 1) Adjust steering wheel to the center position. 2) Connect Subaru Select Monitor, and select {Current Data Display & Save}. 3) Read the steering angle sensor output displayed on display.	Is the indicated reading of the steering angle sensor output on the monitor display –10° — 10°?	Go to step **4**.	Check the installation of the steering wheel and steering angle sensor, and replace the parts if necessary.

	Step	Check	Yes	No
4	**CHECK OUTPUT OF SENSORS USING SUBARU SELECT MONITOR.** 1) Drive the vehicle on a flat road. 2) Park the vehicle straight. 3) Connect Subaru Select Monitor, and select {Current Data Display & Save}. 4) Read output of sensors displayed on display.	Are the indicated reading of sensor outputs following values? Lateral G sensor output: –2 — 2 m/s^2 Longitudinal G sensor output: –2 — 2 m/s^2 Yaw rate sensor output: –4 — 4 deg/s	Go to step **5**.	Recheck from step 1, and if the problem is not solved, go to next. Go to step **8**.
5	**SET 0 POINT FOR LONGITUDINAL G SENSOR USING SUBARU SELECT MONITOR.** 1) Select “Function Check Sequence” on Subaru Select Monitor. 2) Perform Set up mode for Neutral of Steering Angle Sensor & Lateral G Sensor 0 point. <Ref. to VDC-10, SET UP MODE FOR NEUTRAL OF STEERING ANGLE SENSOR & LATERAL G SENSOR 0 POINT, ADJUSTMENT, VDC Control Module and Hydraulic Control Unit (VDCCM&H/U).>	Is the 0 point setting successful?	Go to step **6**.	Recheck from step 1, and when the 0 point setting is not possible, replace the VDCCM&H/U and steering angle sensor. <Ref. to VDC-7, VDC Control Module and Hydraulic Control Unit (VDCCM&H/U).> <Ref. to VDC-19, Steering Angle Sensor.>
6	**PERFORM DRIVING TEST.** Drive approximately 10 minutes, and check if the warning lights illuminate or improperly operate during driving.	Did the ABS warning light or VDC warning light remain off? Does ABS or VDC operate without malfunction?	Go to step **7**.	Recheck from step 1, and when the warning lights illuminate or improperly operate, replace the VDCCM&H/U. <Ref. to VDC-7, VDC Control Module and Hydraulic Control Unit (VDCCM&H/U).>
7	**CHECK OUTPUT OF SENSORS USING SUBARU SELECT MONITOR.** 1) Park the vehicle on a level surface. 2) Connect Subaru Select Monitor, and select {Current Data Display & Save}. 3) Read output of sensors displayed on display.	Are the indicated reading of sensor outputs following values? Lateral G sensor output: –1.5 — 1.5 m/s^2 Longitudinal G sensor output: –1.5 — 1.5 m/s^2 Yaw rate sensor output: –4 — 4 deg/s	It results from a temporary noise interference.	Replace the VDCCM&H/U. <Ref. to VDC-7, VDC Control Module and Hydraulic Control Unit (VDCCM&H/U).>
8	**CHECK OUTPUT OF SENSORS USING SUBARU SELECT MONITOR.** 1) Remove the VDCCM&H/U installation bolt and bracket. 2) Keep VDCCM&H/U in a horizontal position. 3) Connect Subaru Select Monitor, and select {Current Data Display & Save}. 4) Read output of sensors displayed on display.	When VDCCM&H/U is in a horizontal position, are the indicated reading of sensor outputs following values? Lateral G sensor output: –1.5 — 1.5 m/s^2 Longitudinal G sensor output: –1.5 — 1.5 m/s^2 Yaw rate sensor output: –4 — 4 deg/s	Check the bracket and brake pipe, and install VDCCM&H/U in a horizontal position to the vehicle.	Replace the VDCCM&H/U. <Ref. to VDC-7, VDC Control Module and Hydraulic Control Unit (VDCCM&H/U).>

13.General Diagnostic Table

A: INSPECTION

Symptoms		Main probable cause	Other probable cause
Poor brake performance	Long braking/ stopping distance	• VDCCM&H/U • Brake pad • Aeration to brake line • Tire specifications, tire wear and air pressures • Incorrect wiring or piping connections	• Defective ABS wheel speed sensor or sensor gap • Defective steering angle sensor or improper neutral position • Defective yaw rate & G sensor or improper installation of VDCCM&H/U. • Master cylinder • Brake caliper • Disc rotor • Brake pipe • Brake booster
	Wheel lock	• VDCCM&H/U • Defective ABS wheel speed sensor or sensor gap • Incorrect wiring or piping connections	• Defective steering angle sensor or improper neutral position • Defective yaw rate & G sensor or improper installation of VDCCM&H/U. • Brake caliper • Brake pipe
	Brake drag	• VDCCM&H/U • Defective ABS wheel speed sensor or sensor gap • Master cylinder • Brake caliper • Parking brake • Axle and wheels • Brake pedal play	• Defective steering angle sensor or improper neutral position • Defective yaw rate & G sensor or improper installation of VDCCM&H/U. • Brake pad • Brake pipe
	Long brake pedal stroke	• Aeration to brake line • Brake pedal play	• VDCCM&H/U • Master cylinder • Brake caliper • Brake pad • Brake pipe • Brake booster
	Vehicle vertical pitching	• VDCCM&H/U • Road surface (uneven) • Suspension play or fatigue (reduced damping) • Incorrect wiring or piping connections	• Defective ABS wheel speed sensor or sensor gap • Defective steering angle sensor or improper neutral position • Defective yaw rate & G sensor or improper installation of VDCCM&H/U.
Poor brake performance	Unstable or uneven braking	• VDCCM&H/U • Defective ABS wheel speed sensor or sensor gap • Brake caliper • Brake pad • Road surface (uneven) • Tire specifications, tire wear and air pressures • Incorrect wiring or piping connections	• Defective ABS wheel speed sensor or sensor gap • Defective steering angle sensor or improper neutral position • Defective yaw rate & G sensor or improper installation of VDCCM&H/U. • Master cylinder • Disc rotor • Brake pipe • Axle and wheels • Road with crowns or banks • Suspension play or fatigue (reduced damping)

Symptoms		Main probable cause	Other probable cause
Vibration or noise • When braking suddenly • When accelerating suddenly • While driving on a slippery road	Excessive brake pedal vibration	• Road surface (uneven) • Incorrect wiring or piping connections	• VDCCM&H/U • Brake booster • Suspension play or fatigue (reduced damping)
	Noise from VDCH/U	• VDCCM&H/U (mount bushing) • Defective ABS wheel speed sensor or sensor gap • Brake pipe	• VDCCM&H/U • Defective steering angle sensor or improper neutral position • Defective yaw rate & G sensor or improper installation of VDCCM&H/U.
	Noise from the front side of vehicle	• VDCCM&H/U (mount bushing) • Defective ABS wheel speed sensor or sensor gap • Master cylinder • Brake caliper • Brake pad • Disc rotor • Brake pipe • Brake booster • Suspension play or fatigue (reduced damping)	• Axle and wheels • Tire specifications, tire wear and air pressures
	Noise from the rear side of vehicle	• Defective ABS wheel speed sensor or sensor gap • Brake caliper • Brake pad • Disc rotor • Parking brake • Brake pipe • Suspension play or fatigue (reduced damping)	• Axle and wheels • Tire specifications, tire wear and air pressures
Engine does not accelerate or goes into a stall when accelerating suddenly or driving on a slippery surface.		• VDCCM&H/U • Defective ABS wheel speed sensor or sensor gap • Master cylinder • Brake caliper • Parking brake • Incorrect wiring or piping	• Defective steering angle sensor or improper neutral position • Defective yaw rate & G sensor or improper installation of VDCCM&H/U. • Brake pad • Brake pipe

General Diagnostic Table

Symptoms		Main probable cause	Other probable cause
Poor change-direction-operation stability of TCS	Deviation to right or left direction	• VDCCM&H/U • Defective ABS wheel speed sensor or sensor gap • Defective steering angle sensor or improper neutral position • Defective yaw rate & G sensor or improper installation of VDCCM&H/U. • Brake caliper • Brake pad • Wheel alignment • Road surface (uneven) • Road with crowns or banks • Tire specifications, tire wear and air pressures • Incorrect wiring or piping connections	• Disc rotor • Brake pipe • Axle and wheels • Suspension play or fatigue (reduced damping)
	Vehicle spin	• VDCCM&H/U • Defective ABS wheel speed sensor or sensor gap • Defective steering angle sensor or improper neutral position • Defective yaw rate & G sensor or improper installation of VDCCM&H/U. • Brake pad • Tire specifications, tire wear and air pressures • Incorrect wiring or piping connections	• Brake caliper • Brake pipe
Steering wheel drag while driving		• VDCCM&H/U • Defective ABS wheel speed sensor or sensor gap • Defective steering angle sensor or improper neutral position • Defective yaw rate & G sensor or improper installation of VDCCM&H/U. • Incorrect wiring or piping connections • Power steering system	• Brake caliper • Brake pad • Disc rotor • Wheel alignment • Road surface (uneven) • Road with crowns or banks • Suspension play or fatigue (reduced damping) • Tire specifications, tire wear and air pressures
VDC operates while driving normally.		• VDCCM&H/U • Defective ABS wheel speed sensor or sensor gap • Defective steering angle sensor or improper neutral position • Defective yaw rate & G sensor or improper installation of VDCCM&H/U. • Wheel alignment • Road surface (uneven) • Road with crowns or banks • Suspension play or fatigue (reduced damping) • Tire specifications, tire wear and air pressures • Incorrect wiring or piping connections • Power steering system	

Symptoms	Main probable cause	Other probable cause
VDC OFF indicator light does not illuminate when the VDC OFF switch is depressed. NOTE: When pressing VDC OFF switch for 10 seconds or more, VDC OFF indicator light goes off and cannot operate any more. When turning the ignition switch from OFF to ON, the previous status is restored.	• Harness • Combination meter • VDC OFF switch	

BRAKE

BR

		Page
1.	General Description	2
2.	Front Brake Pad	13
3.	Front Disc Rotor	15
4.	Front Disc Brake Assembly	16
5.	Rear Brake Pad	20
6.	Rear Disc Rotor	22
7.	Rear Disc Brake Assembly	24
8.	Master Cylinder	27
9.	Brake Booster	28
10.	Brake Fluid	33
11.	Air Bleeding	34
12.	Brake Hose	36
13.	Brake Pipe	38
14.	Brake Pedal	39
15.	Stop Light Switch	41
16.	General Diagnostic Table	43

1. General Description

A: SPECIFICATION

Size			16-inch type	17-inch type
Front disc brake	Type		Disc (Floating type, ventilated)	
	Effective disc diameter	mm (in)	244 (4.61)	261 (10.28)
	Disc thickness × Diameter	mm (in)	24 × 294 (0.94 × 11.57)	30 × 316 (1.18 × 12.44)
	Effective cylinder diameter		42.8 (1.685) × 2	
	Pad dimensions (Length × Width × Thickness)	mm (in)	117.8 × 50.5 × 11.0 (4.638 × 1.988 × 0.433)	130.0 × 53.5 × 11.0 (5.118 × 2.106 × 0.433)
	Clearance adjustment		Automatic adjustment	
Rear disc brake	Size		16-inch type	
	Type		Disc (Floating type, solid)	Disc (Floating type, ventilated)
	Effective disc diameter	mm (in)	250 (9.84)	255 (10.0)
	Disc thickness × Diameter	mm (in)	10 × 286 (0.39 × 11.26)	18 × 290 (0.71 × 11.42)
	Effective cylinder diameter	mm (in)	38.1 (1.500)	40.4 (1.591)
	Pad dimensions (Length × Width × Thickness)	mm (in)	92.0 × 33.0 × 9.0 (3.622 × 1.299 × 0.354)	95.5 × 34.8 × 11.0 (3.759 × 1.370 × 0.433)
	Clearance adjustment		Automatic adjustment	
Master cylinder	Type		Tandem	
	Effective diameter	mm (in)	23.8 (15/16)	
	Reservoir type		Sealed type	
	Brake fluid reservoir capacity	cm^3 (cu in)	205 (12.51)	
Brake booster	Type		Vacuum suspended	
	Effective diameter	mm (in)	208 + 229 (8.19 + 9.02)	
Brake line			Dual circuit system	
Brake fluid **CAUTION:** **• Avoid mixing brake fluid of different brands to prevent fluid performance from degrading.** **• When filling with brake fluid, be careful not to allow any dust to enter the reservoir.** **• Use new SUBARU genuine brake fluid when replacing or refilling the fluid.**			FMVSS No. 116, DOT3, or DOT4	

NOTE:
Refer to “PB” section for parking brake specifications. <Ref. to PB-2, SPECIFICATION, General Description.>

Contents			Specification	Service limit
Front brake	Pad thickness mm (in)	16-inch type	11 (0.43)	1.5 (0.059)
		17-inch type	11 (0.43)	1.5 (0.059)
	Disc thickness mm (in)	16-inch type	24 (0.94)	22 (0.87)
		17-inch type	30 (1.18)	28 (1.10)
	Disc runout mm (in)		—	0.05 (0.0020)
Rear brake (disc type)	Pad thickness mm (in)	Solid disc	9.0 (0.354)	1.5 (0.059)
		Ventilated disc	11 (0.43)	1.5 (0.059)
	Disc thickness mm (in)	Solid disc	10 (0.39)	8.5 (0.335)
		Ventilated disc	18 (0.71)	16 (0.63)
	Disc runout mm (in)		—	0.05 (0.0020)
Parking brake	Inside diameter mm (in)		190 (7.48)	191 (7.52)
	Lining thickness mm (in)		2.8 (0.11)	1.5 (0.059)

		Brake pedal force N (kgf, lbf)	Fluid pressure kPa (kgf/cm^2, psi)
Brake booster	Brake fluid pressure with engine stopped	147 (15, 33)	533 (5, 77)
		294 (30, 66)	1,551 (16, 225)
	Brake fluid pressure with engine running and vacuum pressure at 66.7 kPa (500 mmHg, 19.69 inHg)	147 (15, 33)	6,177 (63, 896)
		294 (30, 66)	11,273 (115, 1,635)

Brake pedal	Free play mm (in)	2 — 5 (0.079 — 0.197) [When pulling the brake pedal upward with a force of less than 10 N (1 kgf, 2 lbf)]

B: COMPONENT

1. FRONT DISC BRAKE

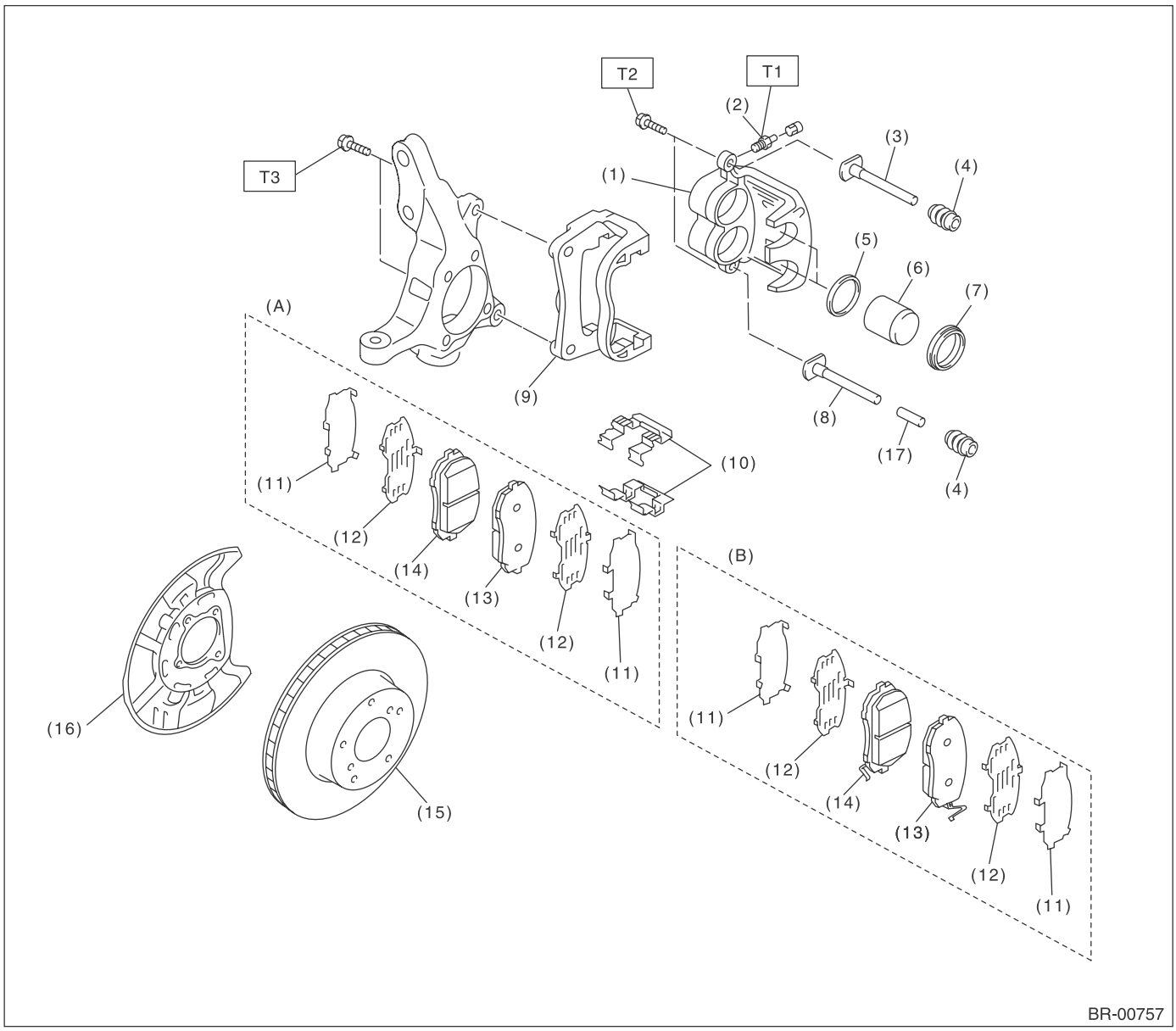

(A) 16-inch type
(B) 17-inch type

(1) Caliper body
(2) Air bleeder screw
(3) Guide pin (Black)
(4) Pin boot
(5) Piston seal
(6) Piston
(7) Piston boot
(8) Lock pin (Silver)
(9) Support
(10) Pad clip
(11) Outer shim
(12) Inner shim
(13) Pad (Outside)
(14) Pad (Inside)
(15) Disc rotor
(16) Disc cover
(17) Bushing

Tightening torque:N·m (kgf-m, ft-lb)
T1: 8 (0.8, 5.9)
T2: 27 (2.8, 19.9)
T3: 120 (12.2, 88.5)

2. REAR DISC BRAKE

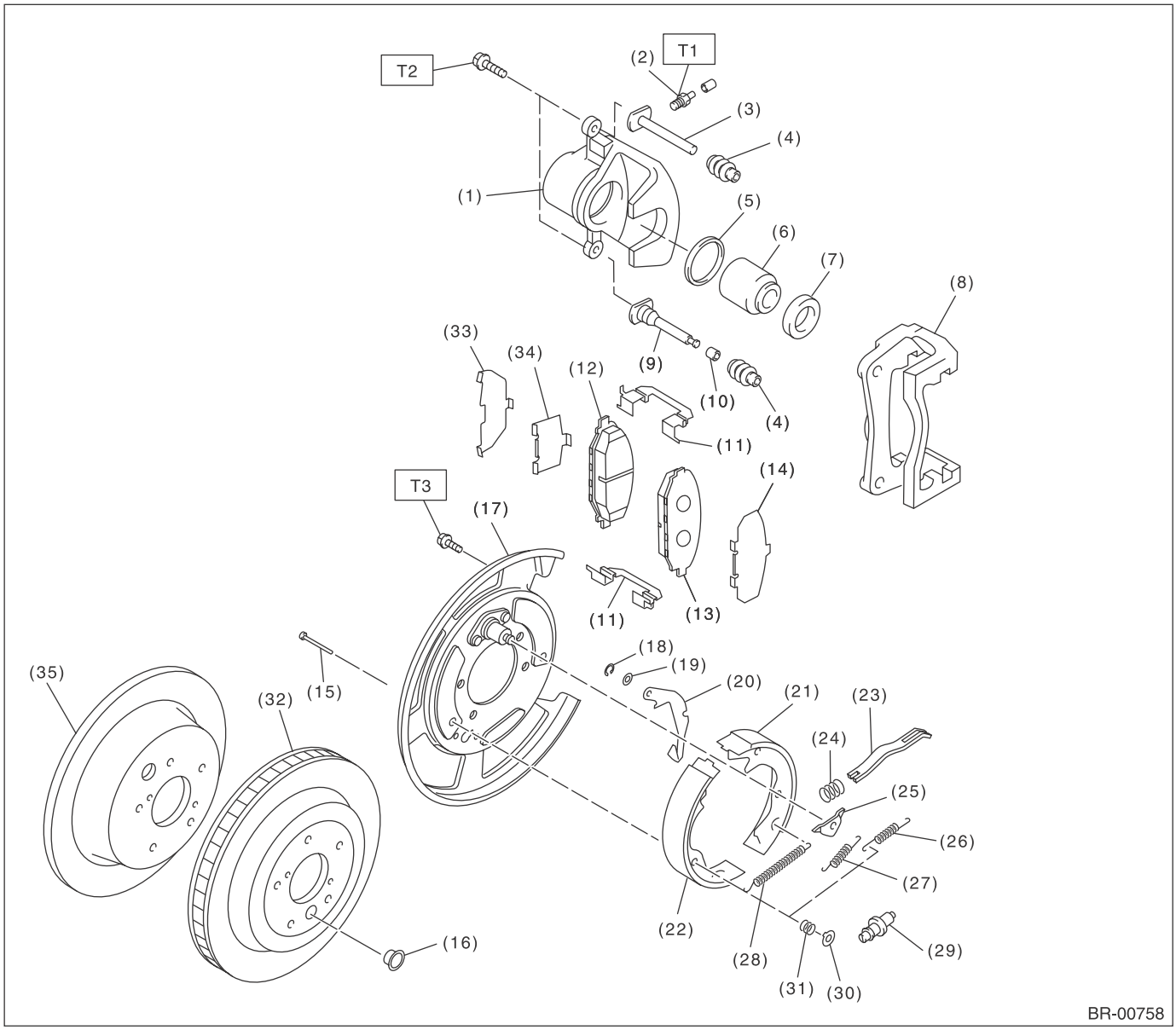

(1) Caliper body
(2) Air bleeder screw
(3) Guide pin (Black)
(4) Pin boot
(5) Piston seal
(6) Piston
(7) Piston boot
(8) Support
(9) Lock pin (Silver)
(10) Bushing
(11) Pad clip
(12) Inner pad
(13) Outer pad
(14) Shim
(15) Shoe hold-down pin
(16) Adjusting hole cover
(17) Back plate
(18) Retainer
(19) Wave washer
(20) Lever
(21) Parking brake shoe (Secondary)
(22) Parking brake shoe (Primary)
(23) Strut
(24) Strut spring
(25) Shoe guide plate
(26) Secondary shoe return spring
(27) Primary shoe return spring
(28) Adjusting spring
(29) Adjuster
(30) Shoe hold-down cup
(31) Shoe hold-down spring
(32) Disc rotor (Ventilated type)
(33) Outer shim
(34) Inner shim
(35) Disc rotor (Solid type)

Tightening torque:N·m (kgf-m, ft-lb)
T1: 8 (0.8, 5.9)
T2: 27 (2.8, 19.9)
T3: 66 (6.7, 48.7)

3. MASTER CYLINDER

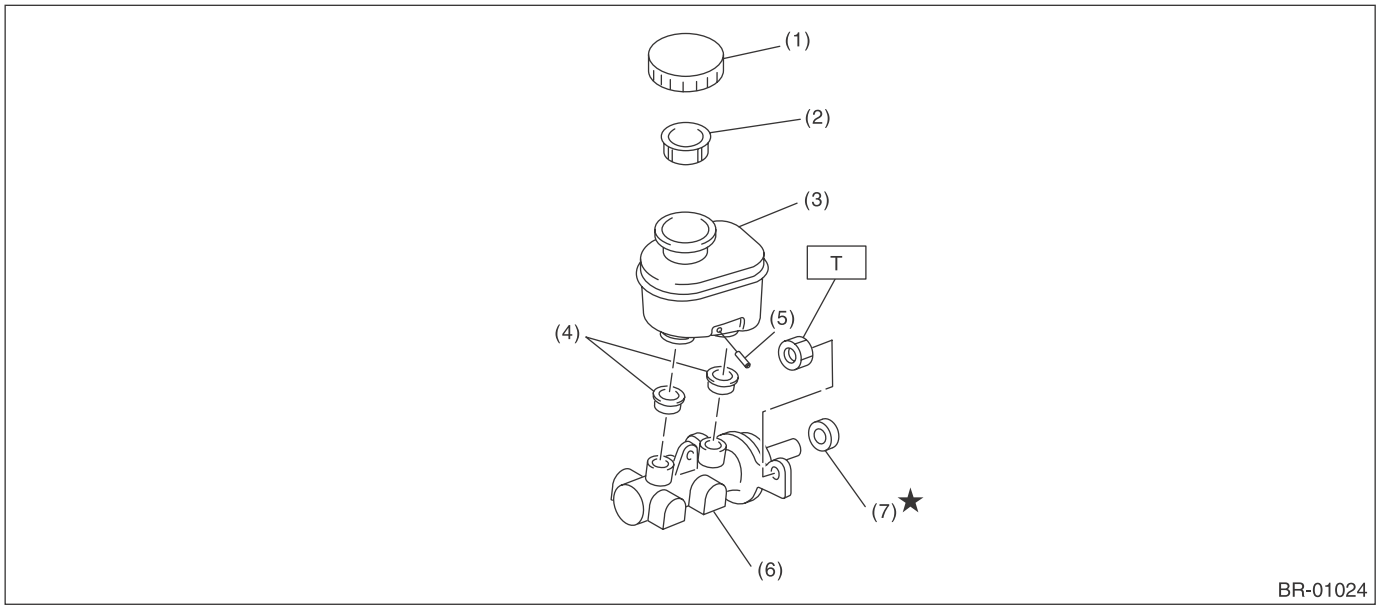

(1) Cap
(2) Filter
(3) Reservoir tank
(4) Seal
(5) Pin
(6) Cylinder body ASSY
(7) Seal sub ASSY

Tightening torque:N·m (kgf-m, ft-lb)
T: 13 (1.3, 9.6)

4. FRONT BRAKE PIPES AND HOSES

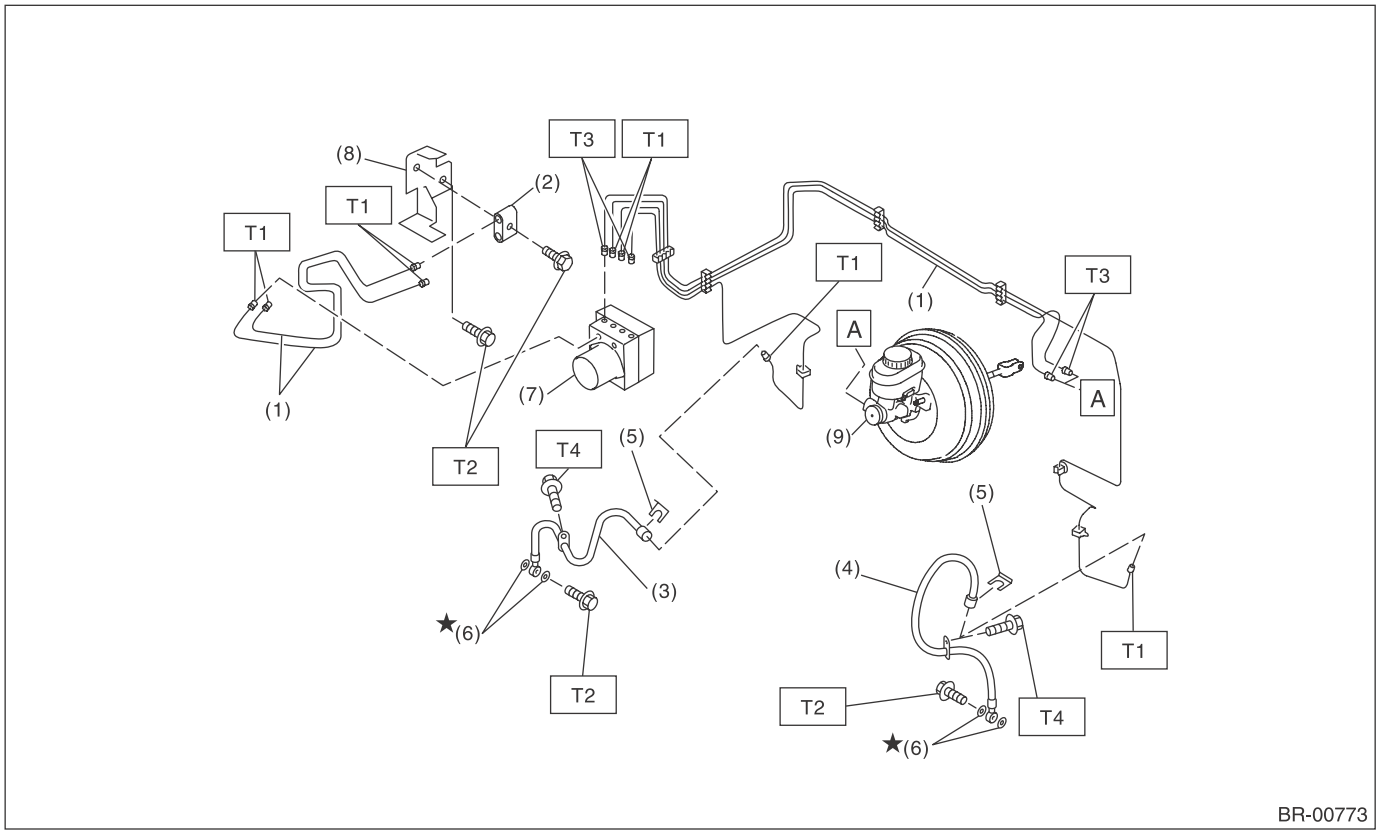

(1)	Front brake pipe ASSY	(6)	Gasket	***Tightening torque:N·m (kgf-m, ft-lb)***
(2)	Two-way connector	(7)	VDC control module and hydraulic control unit (VDCCM&H/U)	***T1: 15 (1.5, 11.1)***
(3)	Front brake hose RH	(8)	Bracket	***T2: 18 (1.8, 13.3)***
(4)	Front brake hose LH	(9)	Master cylinder	***T3: 19 (1.9, 14)***
(5)	Clamp			***T4: 33 (3.4, 24.3)***

5. CENTER AND REAR BRAKE PIPES AND HOSES

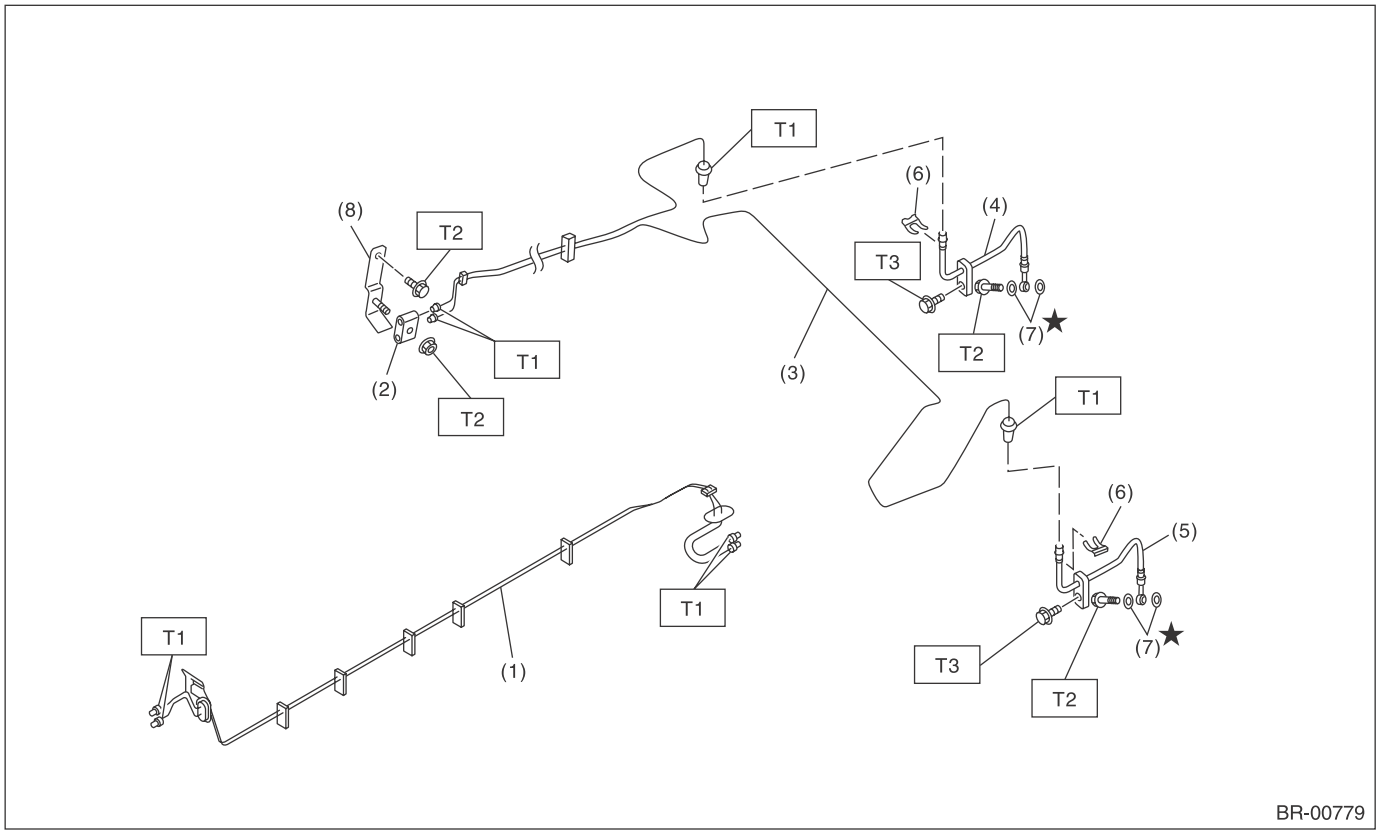

(1)	Center brake pipe ASSY	(5)	Rear brake hose LH
(2)	Connector	(6)	Clamp
(3)	Rear brake pipe ASSY	(7)	Gasket
(4)	Rear brake hose RH	(8)	Bracket

Tightening torque:N·m (kgf-m, ft-lb)
T1: 15 (1.5, 11.1)
T2: 18 (1.8, 13.3)
T3: 33 (3.4, 24.3)

6. BRAKE BOOSTER

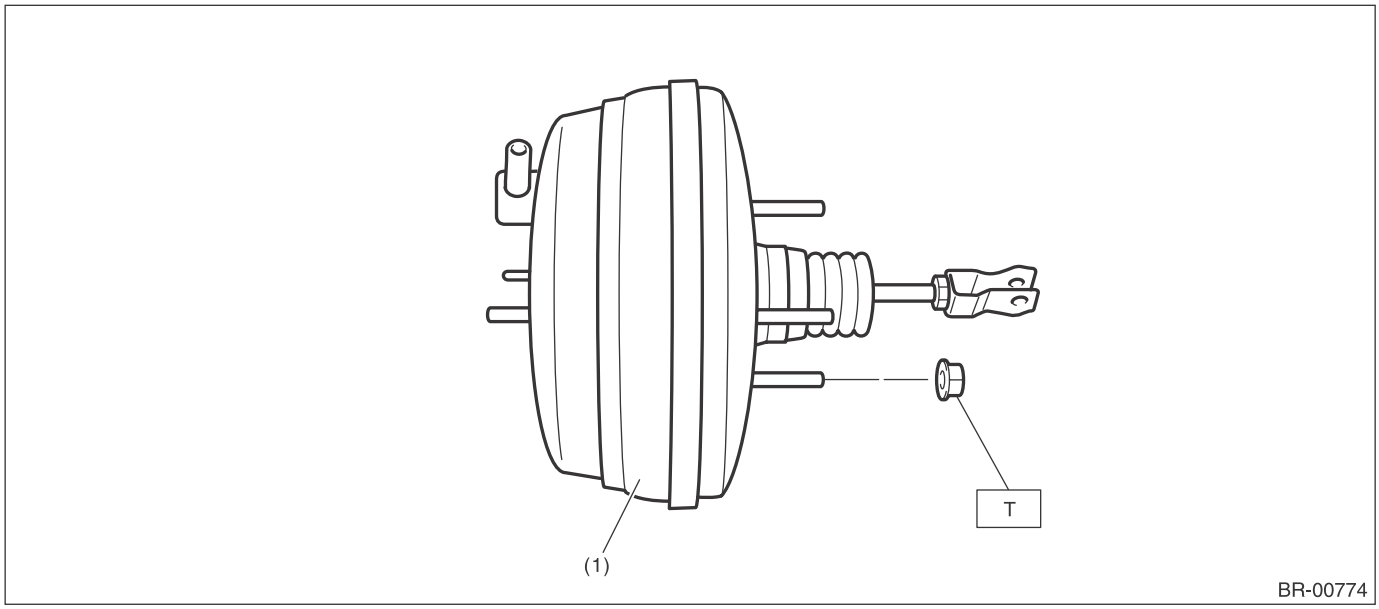

(1) Brake booster

Tightening torque:N·m (kgf-m, ft-lb)
T: 18 (1.8, 13.3)

7. BRAKE PEDAL

- AT model

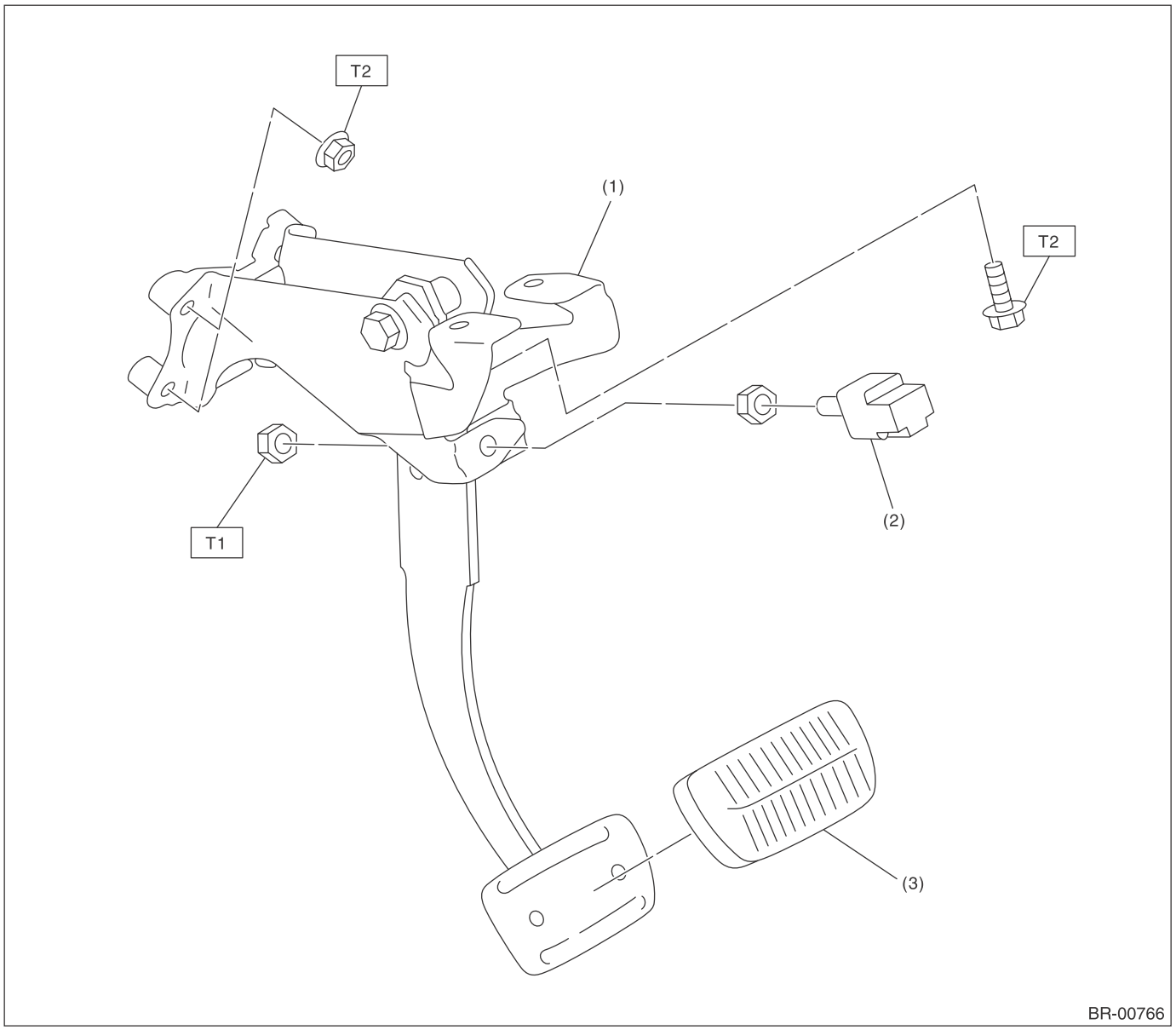

(1) Brake pedal ASSY
(2) Stop light switch
(3) Brake pedal pad

Tightening torque:N·m (kgf-m, ft-lb)
T1: 8 (0.8, 5.9)
T2: 18 (1.8, 13.3)

- MT model

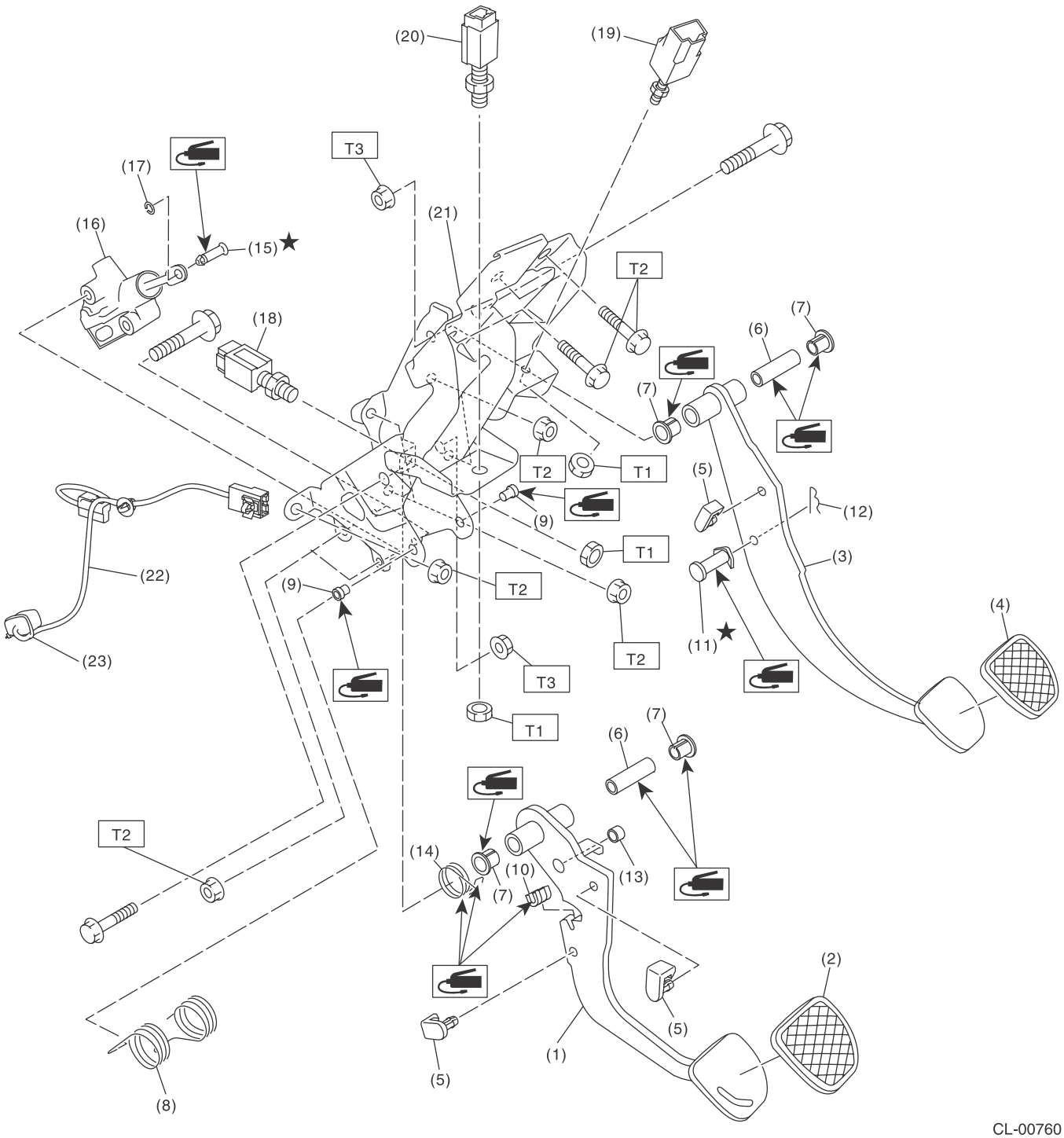

CL-00760

(1) Clutch pedal
(2) Clutch pedal pad
(3) Brake pedal
(4) Brake pedal pad
(5) Stopper
(6) Spacer
(7) Bushing
(8) Torsion spring
(9) Assist bushing
(10) Torsion spring bush
(11) Clevis pin
(12) Snap pin
(13) Bush A
(14) Assist spring
(15) Clevis pin
(16) Master cylinder ASSY
(17) Clip
(18) Clutch switch (clutch start)
(19) Stop and brake switch
(20) Clutch switch (cruise control)
(21) Pedal bracket
(22) Sensor harness
(23) Band

Tightening torque:N·m (kgf-m, ft-lb)	
T1:	*8 (0.8, 5.9)*
T2:	*18 (1.8, 13.3)*
T3:	*30 (3.1, 22.1)*

C: CAUTION

- Wear appropriate work clothing, including a cap, protective goggles and protective shoes when performing any work.
- Before removal, installation or disassembly, be sure to clarify the failure. Avoid unnecessary removal, installation, disassembly and replacement.
- Use SUBARU genuine grease etc. or equivalent. Do not mix grease etc. of different grades or manufacturers.
- Before securing a part in a vise, place cushioning material such as wood blocks, aluminum plate or cloth between the part and the vise.
- Be sure to tighten fasteners including bolts and nuts to the specified torque.
- Place shop jacks or rigid racks at the specified points.

2. Front Brake Pad

A: REMOVAL

1) Lift up the vehicle, and remove the front wheels.
2) Remove the caliper bolt.

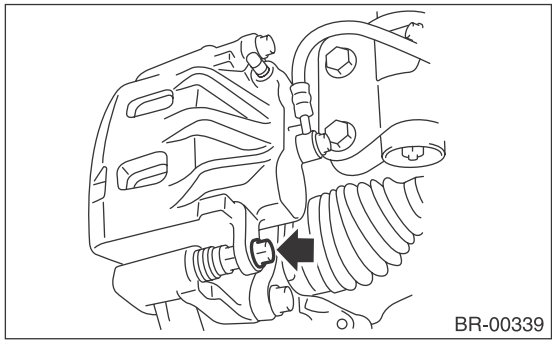

3) Raise the caliper body and support it.

NOTE:
Do not disconnect the brake hose from the caliper body.

4) Remove the pad.

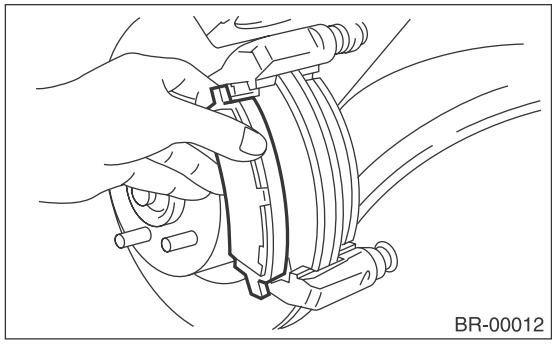

B: INSTALLATION

1. 16-INCH TYPE

1) Apply a thin coat of Molykote M7439 (Part No. K0770YA000) or grease contained in the pad kit to the pad clip.

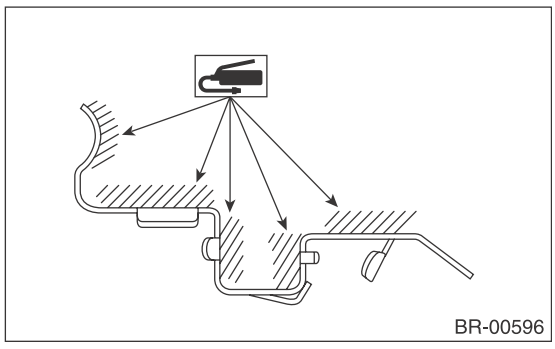

2) Apply a thin coat of Molykote AS880N (Part No. K0777YA010) or grease contained in the pad kit to both surfaces of the pad and inner shim.

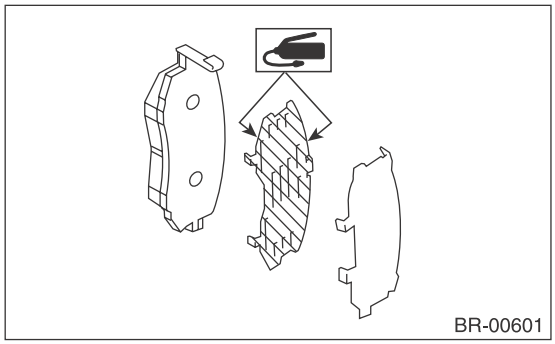

3) Install the pad to support.
4) Install the caliper body to the support.

Tightening torque:
27 N·m (2.8 kgf-m, 19.9 ft-lb)

2. 17-INCH TYPE

1) Apply a thin coat of Molykote M7439 (Part No. K0770YA000) or grease contained in the pad kit to the pad clip.

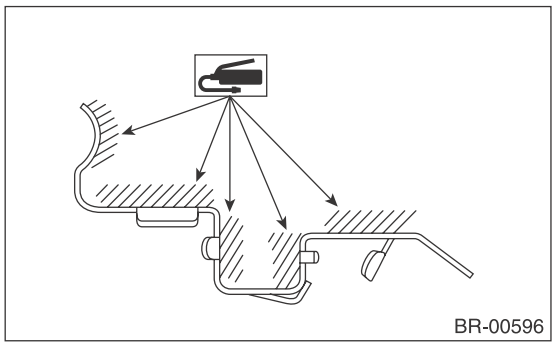

2) Apply a thin coat of Molykote AS880N (Part No. K0777YA010) or grease contained in the pad kit to both surfaces of the pad and inner shim.

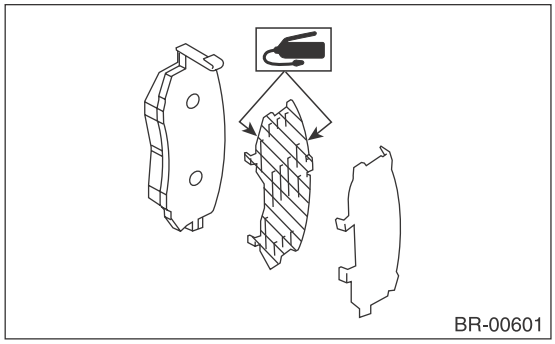

3) Install the pad to support.

NOTE:
Install the pad indicator in proper direction.

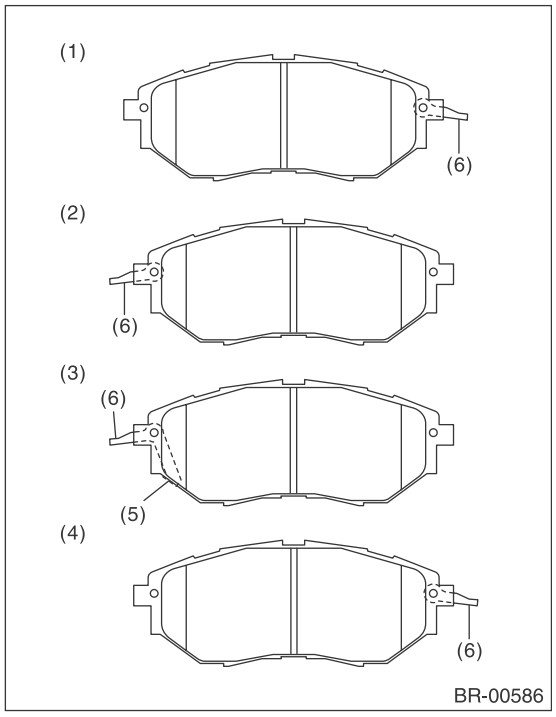

(1) LH – IN
(2) LH – OUT
(3) RH – IN
(4) RH – OUT
(5) Pad indicator
(6) Pad return spring

CAUTION:
• Be sure to install so that the pad return spring faces the input side of the direction of brake rotor rotation, as shown in the figure.
• Correctly install the pad return spring to the supporting surface of the pad clip as shown in the figure.
• If the pad return spring is deformed or damaged, replace the brake pad.

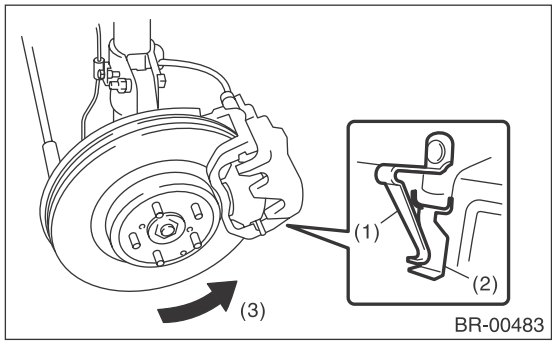

(1) Pad return spring
(2) Supporting surface of pad clip
(3) Direction of brake rotor rotation

4) Install the caliper body to the support.

Tightening torque:
27 N·m (2.8 kgf-m, 19.9 ft-lb)

C: INSPECTION

1. 16-INCH TYPE

Check the pad thickness A.

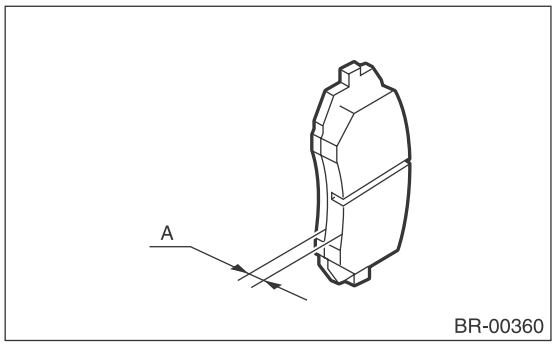

Pad thickness mm (in)	Standard	11 (0.43)
	Wear limit	1.5 (0.059)

NOTE:
• Always replace the pads of both wheels and both sides as a set.
• Replace pad clips if they are twisted or worn.
• Replace the pad if there is oil or grease on it.

2. 17-INCH TYPE

Check the pad thickness A.

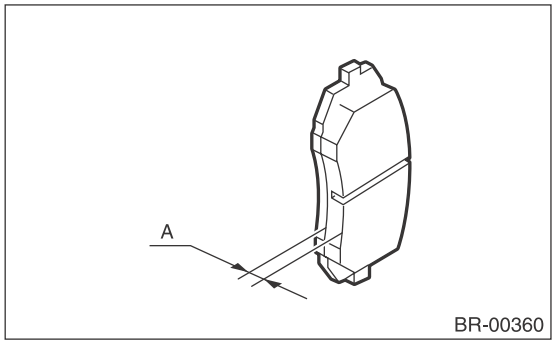

Pad thickness mm (in)	Standard	11 (0.43)
	Wear limit	1.5 (0.059)

NOTE:
• Always replace the pads of both wheels and both sides as a set.
• Replace the pad if there is oil or grease on it.

3. Front Disc Rotor

A: REMOVAL

1) Lift up the vehicle, and remove the front wheels.
2) Remove the caliper body and the support from housing, and suspend them from the strut using a wire.

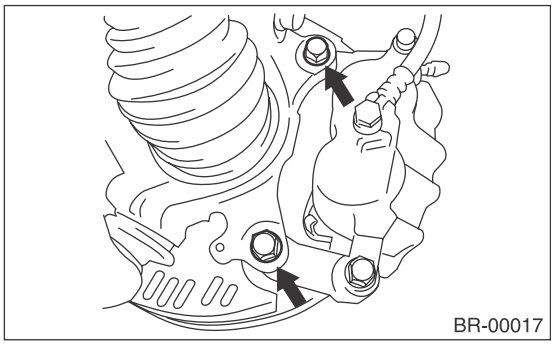

3) Remove the disc rotor.

NOTE:
If it is difficult to remove the disc rotor from the hub, drive an 8 mm bolt into the threaded section (B) of the rotor, then remove the rotor.

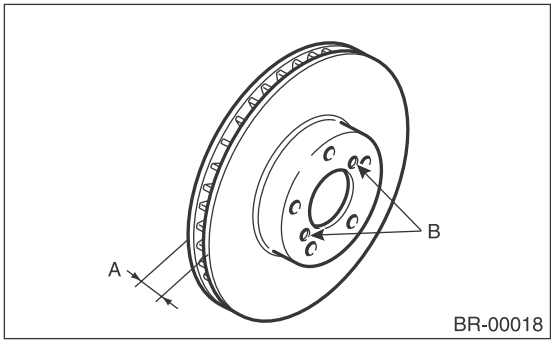

4) Remove mud and foreign matter from the caliper body assembly and the support.

B: INSTALLATION

1) Install the disc rotor.
2) Install the caliper body and the support to housing.

Tightening torque:
120 N·m (12.2 kgf-m, 88.5 ft-lb)
3) Install the front wheels.

C: INSPECTION

1) Check the front wheel bearing play and axle hub runout before the inspection of disc rotor runout limit. <Ref. to DS-15, INSPECTION, Front Axle.>
2) Secure the disc rotor by tightening the five wheel nuts.
3) Set a dial gauge 10 mm (0.39 in) inward from the disc rotor outer circumference. Rotate the disc rotor to check runout. If the disc rotor runout exceeds the service limit, grind the disc rotor. After grinding, check the thickness of the disc rotor by following step 4).

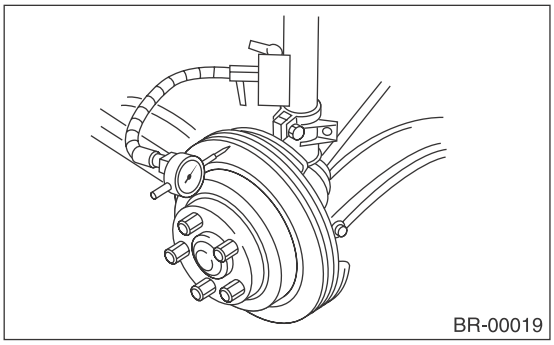

Disc rotor runout limit:
0.05 mm (0.0020 in)
4) Set a micrometer 10 mm (0.39 in) inward from the disc rotor outer perimeter, and then measure the disc rotor thickness. If the thickness of disc rotor exceeds the service limit, replace with a new disc rotor.

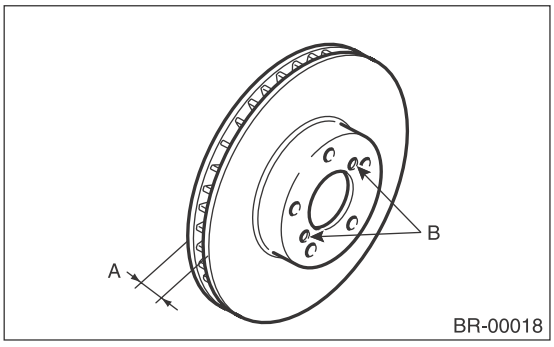

		Standard	Limit	Disc rotor outer diameter
Disc rotor thickness A mm (in)	16″	24 (0.94)	22 (0.87)	294 (11.57)
	17″	30 (1.18)	28 (1.10)	316 (12.44)

4. Front Disc Brake Assembly

A: REMOVAL

CAUTION:
Do not allow brake fluid to come in contact with vehicle body. If it does, wash off with water and wipe away completely.

1) Lift up the vehicle, and remove the front wheels.
2) Remove the union bolt, and disconnect the brake hose from the caliper body assembly.

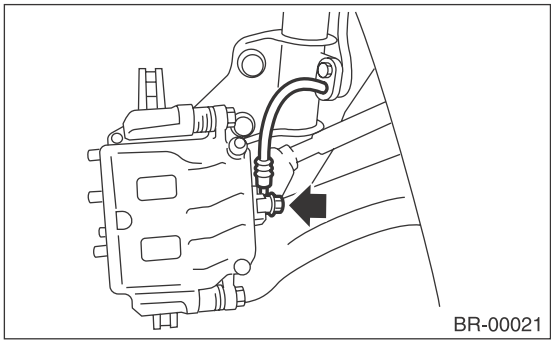

3) Remove the bolts which secure the caliper body.

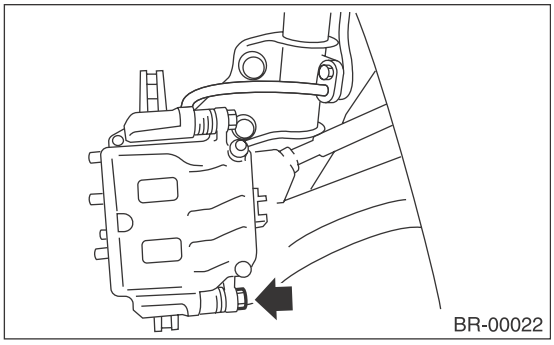

4) Raise the caliper body, and then move it toward vehicle center to separate it from the support.
5) Remove the support from housing.

NOTE:
Remove the support only when replacing the rotor or support. It is not necessary to remove it when servicing the caliper body assembly.

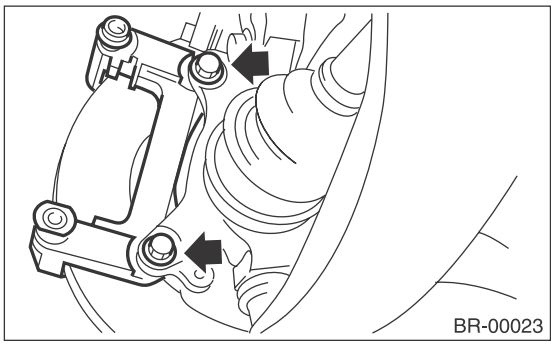

6) Remove mud and foreign matter from the caliper body assembly and the support.

B: INSTALLATION

1. 16-INCH TYPE

1) Apply a thin coat of Molykote M7439 (Part No. K0770YA000) or grease contained in the pad kit to the support.

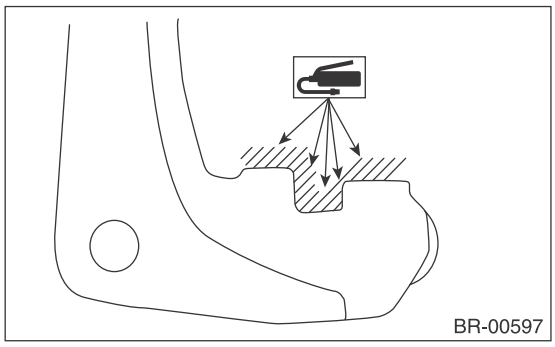

2) Install the support to the housing.

Tightening torque:
120 N·m (12.2 kgf-m, 88.5 ft-lb)

3) Apply a thin coat of Molykote M7439 (Part No. K0770YA000) or grease contained in the pad kit to the pad clip.

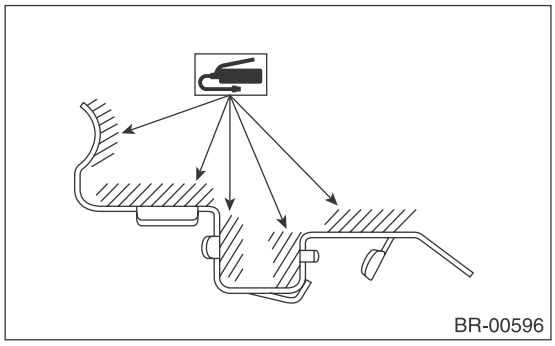

4) Apply a thin coat of Molykote AS880N (Part No. K0777YA010) or grease contained in the pad kit to both surfaces of the pad and inner shim.

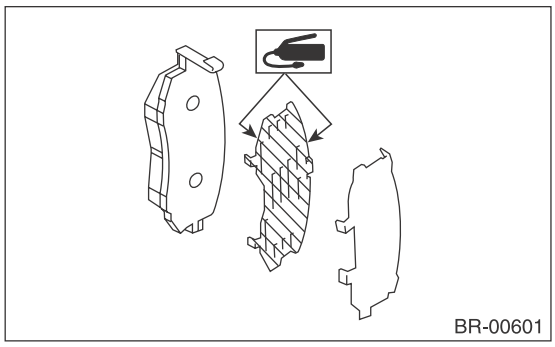

5) Install the pad to support.
6) Install the caliper body to the support.

Tightening torque:
27 N·m (2.8 kgf-m, 19.9 ft-lb)

7) Connect the brake hose using a new brake hose gasket.

Tightening torque:
18 N·m (1.8 kgf-m, 13.3 ft-lb)
8) Bleed air from the brake system.

2. 17-INCH TYPE

1) Apply a thin coat of Molykote M7439 (Part No. K0770YA000) to the support.

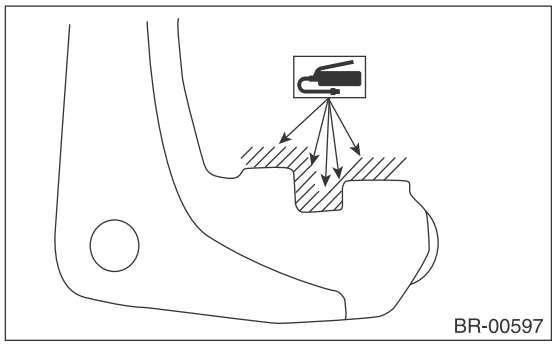

2) Install the support to the housing.

Tightening torque:
120 N·m (12.2 kgf-m, 88.5 ft-lb)
3) Apply a thin coat of Molykote M7439 (Part No. K0770YA000) or grease contained in the pad kit to the pad clip.

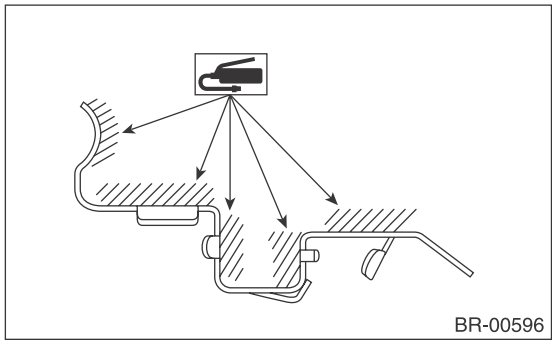

4) Apply a thin coat of Molykote AS880N (Part No. K0777YA010) or grease contained in the pad kit to both surfaces of the pad and inner shim.

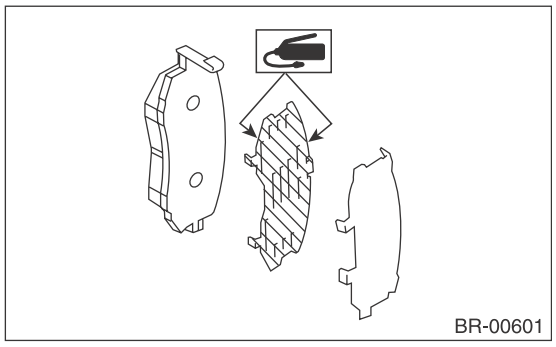

5) Install the pad to support.

NOTE:
Install the pad indicator in proper direction.

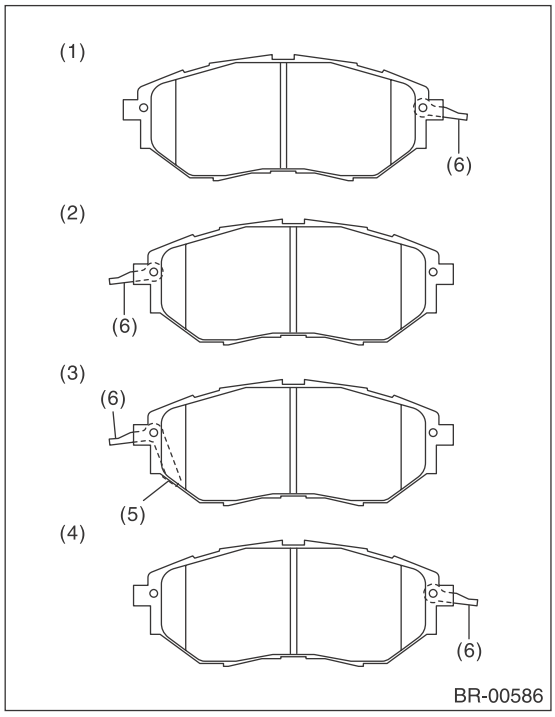

(1) LH – IN
(2) LH – OUT
(3) RH – IN
(4) RH – OUT
(5) Pad indicator
(6) Pad return spring

CAUTION:
• Be sure to install so that the pad return spring faces the input side of the direction of brake rotor rotation, as shown in the figure.
• Correctly install the pad return spring to the supporting surface of the pad clip as shown in the figure.
• If the pad return spring is deformed or damaged, replace the brake pad.

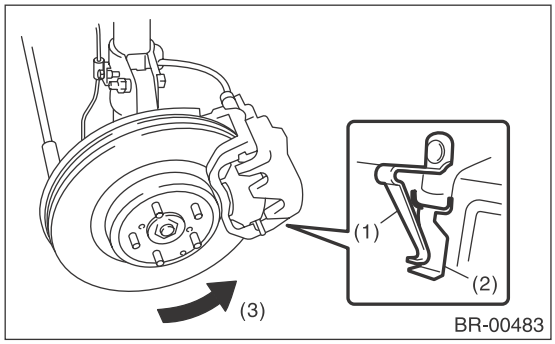

(1) Pad return spring
(2) Supporting surface of pad clip
(3) Direction of brake rotor rotation

6) Install the caliper body to the support.
7) Connect the brake hose using a new brake hose gasket.

Tightening torque:
18 N·m (1.8 kgf-m, 13.3 ft-lb)
8) Bleed air from the brake system.

C: DISASSEMBLY

1) Remove mud and foreign matter from the caliper body assembly and the support.

CAUTION:
Be careful not to allow foreign matter to enter the brake hose connector.
2) Place a wooden block in the caliper body as shown in the figure to prevent the piston from jumping out and being damaged.
3) Gradually apply compressed air via the brake hose installation hole to push the piston out.

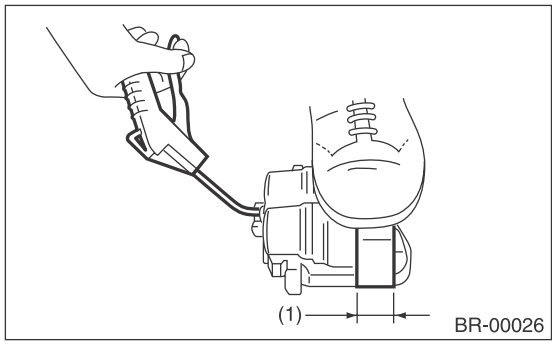

(1) Place a wooden block of 30 mm (1.18 in) width.

4) Remove the piston boot.

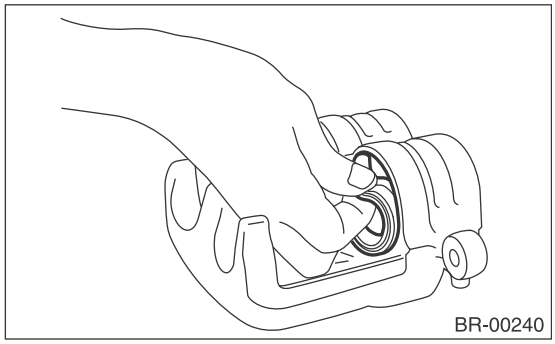

5) Remove the piston seal from caliper body cylinder.

CAUTION:
Do not damage the cylinder and piston seal groove.

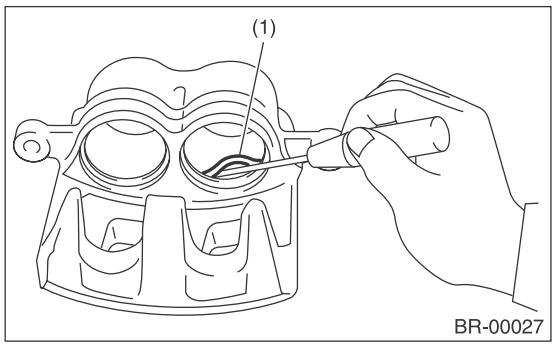

(1) Piston seal

6) Remove the guide pin and boot from caliper body.

D: ASSEMBLY

1) Clean the inside of the caliper body using brake fluid.
2) Apply a coat of brake fluid to piston seal and install the piston seal to the caliper body groove.
3) Apply a coat of brake fluid to the inner surface of cylinder and the entire outer surface of the piston.
4) Apply grease contained in the piston seal kit to the boot, and install it to the groove at the end of the cylinder.
5) Insert the piston into cylinder.

CAUTION:
Do not force the piston into cylinder.

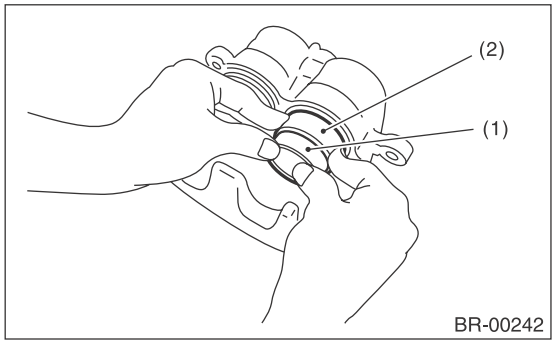

(1) Piston
(2) Piston boot

6) Position the boot in the grooves on cylinder and piston.

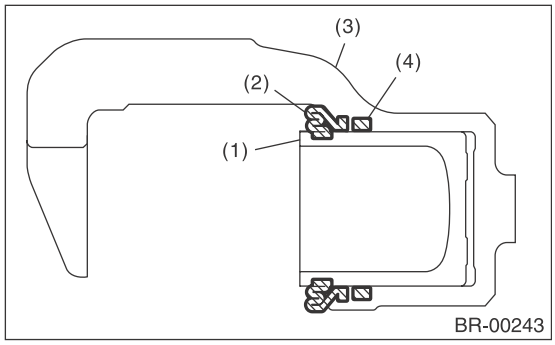

(1) Piston
(2) Piston boot
(3) Caliper body
(4) Piston seal

7) Apply grease contained in the piston seal kit to the lock pin, guide pin outer surface, cylinder inner surface, and boot grooves.
8) Insert the lock pin and guide pin boot into the support.

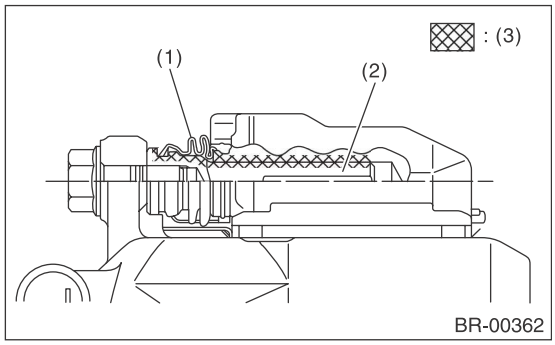

(1) Pin boot
(2) Lock pin or guide pin
(3) Grease applied area

CAUTION:
Insert the lock pin and guide pin into specified position, and make sure that they slide and seat properly.

E: INSPECTION

1) Repair or replace the faulty parts.
2) Check the caliper body and piston for uneven wear, damage or rust.
3) Check the rubber parts for damage or deterioration.

5. Rear Brake Pad

A: REMOVAL

1) Lift up the vehicle, and then remove the rear wheels.
2) Remove the brake hose bracket.

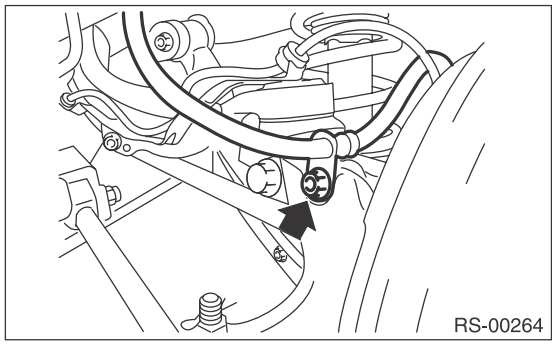

3) Remove the caliper bolt.

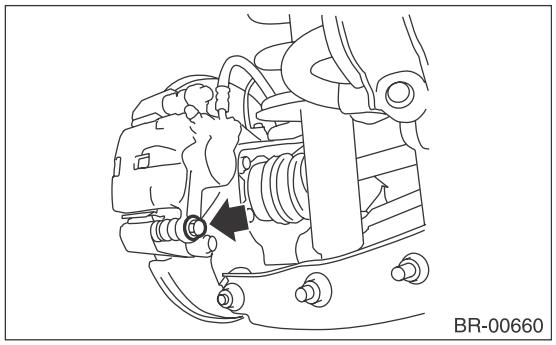

4) Raise the caliper body and support it.

NOTE:
Do not disconnect the brake hose from the caliper body.

5) Remove the pad.

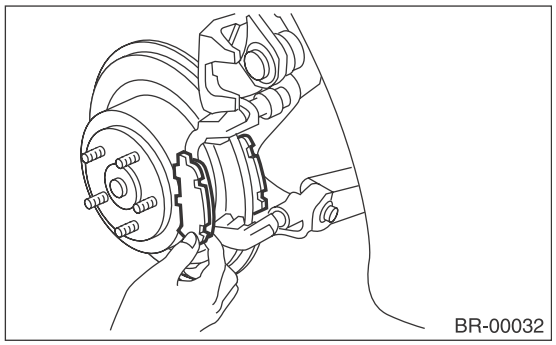

B: INSTALLATION

1) Apply a thin coat of Molykote M7439 (Part No. K0770YA000) or grease contained in the pad kit to the pad clip.

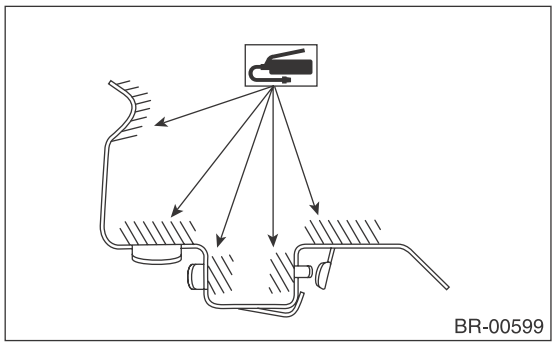

2) Apply a thin coat of Molykote AS880N (Part No. K0777YA010) or grease contained in the pad kit between the outer pad and shim.

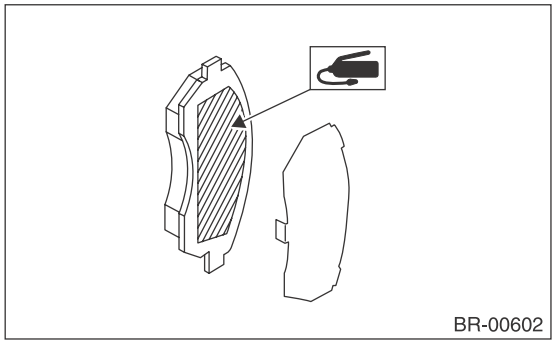

3) Apply a thin coat of Molykote AS880N (Part No. K0777YA010) or grease contained in the pad kit to both surfaces of the inner pad inner shim.

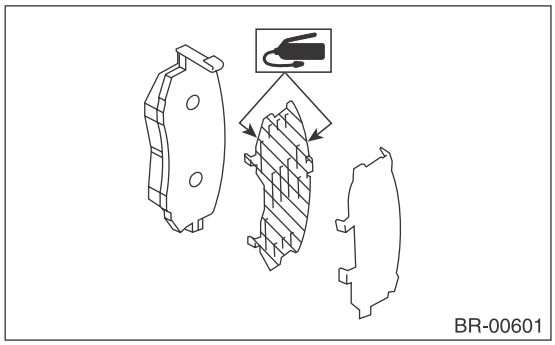

4) Install the pad to support.
5) Install the caliper body to the support.

Tightening torque:
27 N·m (2.8 kgf-m, 19.9 ft-lb)

6) Install the brake hose bracket.

Tightening torque:
33 N·m (3.4 kgf-m, 24.3 ft-lb)

C: INSPECTION

Check the pad thickness A.

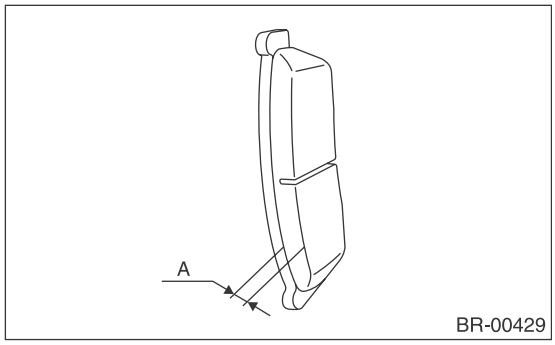

Type of disc rotor		Solid	Ventilated
Pad thickness mm (in)	Standard	9.0 (0.35)	11 (0.43)
	Wear limit	1.5 (0.059)	1.5 (0.059)

NOTE:
- Always replace the pads of both wheels and both sides as a set.
- Replace pad clips if they are twisted or worn.
- A wear indicator is installed on the inner disc brake pad. If the pad is worn to the limit, the end of wear indicator contacts disc rotor, and a squeaking sound is heard as the wheel rotates. If the sound is heard, replace the pad.
- Replace the pad if there is oil or grease on it.

6. Rear Disc Rotor

A: REMOVAL

1) Lift up the vehicle, and then remove the rear wheels.
2) Release the parking brake.
3) Remove the brake hose bracket.

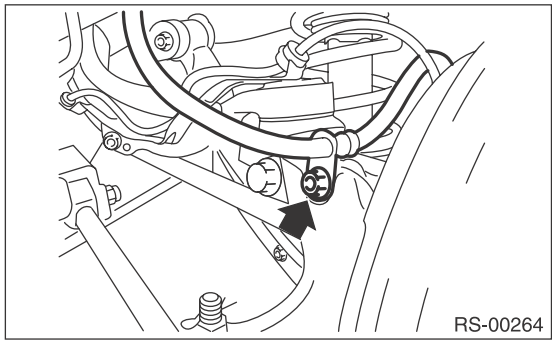

4) Remove the two mounting bolts, and remove the disc brake assembly.

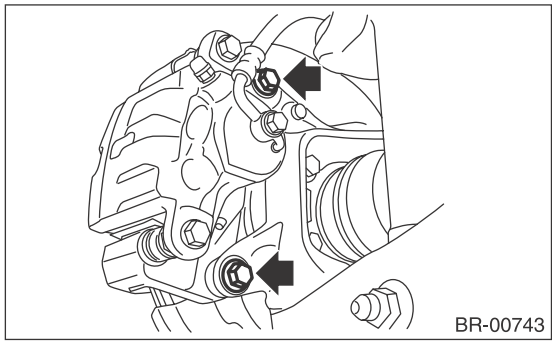

5) Suspend the disc brake assembly so that the hose is not stretched.
6) Remove the disc rotor.

NOTE:
If it is difficult to remove the disc rotor, perform the following two methods in order.

(1) Turn the adjuster using a flat tip screwdriver until the brake shoe is far enough away to allow removal of the disc rotor.

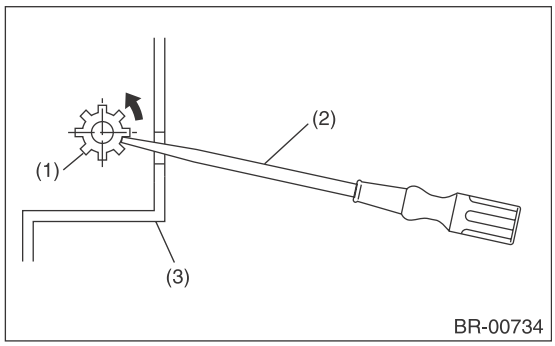

(1) Adjuster
(2) Flat tip screwdriver
(3) Disc rotor

(2) If it is difficult to remove the disc rotor from hub, drive an 8 mm bolt into the threads B of the rotor, and remove the rotor.

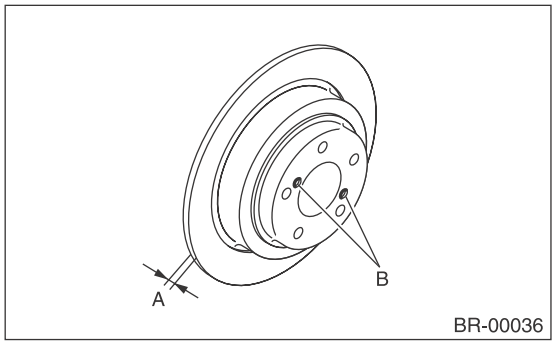

B: INSTALLATION

1) Install in the reverse order of removal.

Tightening torque:
<Ref. to BR-4, COMPONENT, General Description.>

2) Adjust the parking brake. <Ref. to PB-8, ADJUSTMENT, Parking Brake Assembly (Rear Disc Brake).>

C: INSPECTION

1) Check the rear wheel bearing play and axle hub runout before inspecting the disc rotor runout limit. <Ref. to DS-24, INSPECTION, Rear Hub Unit Bearing.>
2) Secure the disc rotor by tightening the five wheel nuts.
3) Set a dial gauge 10 mm (0.39 in) inward from the disc rotor outer circumference. Rotate the disc rotor to check runout. If the disc rotor runout exceeds the service limit, grind the disc rotor. After grinding, check the thickness of the disc rotor by following step 4).

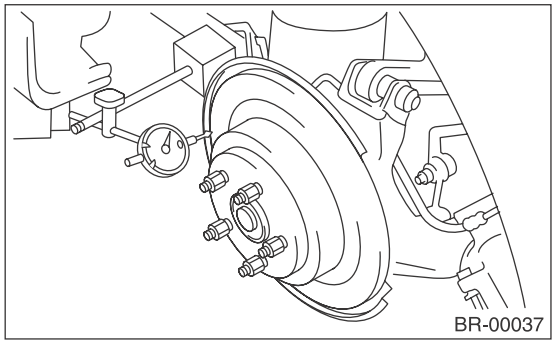

Disc rotor runout limit:
0.05 mm (0.0020 in)

4) Set a micrometer 10 mm (0.39 in) inward from the disc rotor outer perimeter, and then measure the disc rotor thickness. If the thickness of disc rotor exceeds the service limit, replace with a new disc rotor.

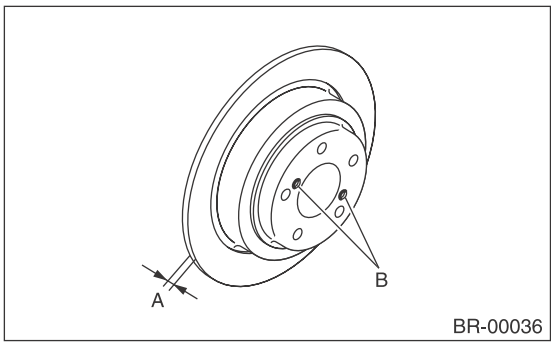

		Standard	Limit	Disc outer dia.
Disc rotor thickness A mm (in)	Solid disc	10 (0.39)	8.5 (0.335)	286 (11.26)
	Ventilated disc	18 (0.71)	16 (0.63)	290 (11.42)

7. Rear Disc Brake Assembly

A: REMOVAL

CAUTION:
Do not allow brake fluid to come in contact with vehicle body. If it does, wash off with water and wipe away completely.

1) Lift up the vehicle, and then remove the rear wheels.
2) Disconnect the brake hoses.

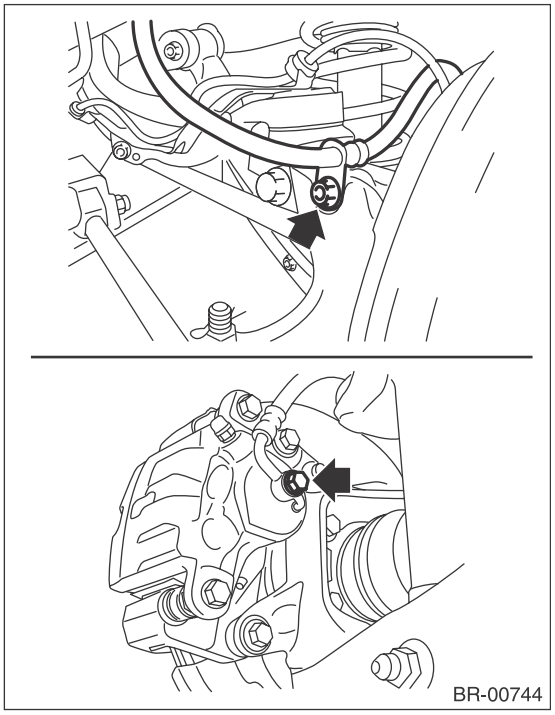

3) Remove the caliper mounting bolt.

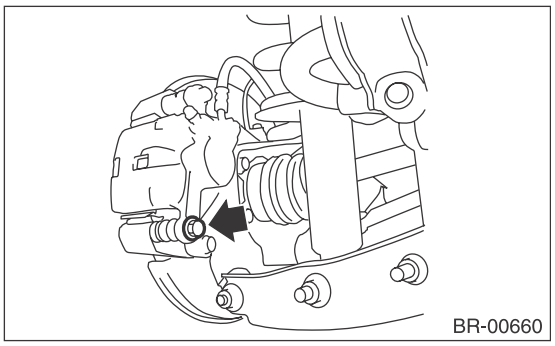

4) Raise the caliper body, and then move it toward vehicle center to separate it from the support.
5) Remove the support from housing.

NOTE:
Remove the support only when replacing the rotor or support. It is not necessary to remove it when servicing the caliper body assembly.

6) Remove mud and foreign matter from the caliper body assembly and the support.

CAUTION:
Be careful not to allow foreign matter to enter the brake hose connector.

B: INSTALLATION

1) Apply a thin coat of Molykote M7439 (Part No. K0770YA000) or grease contained in the pad kit to the support.

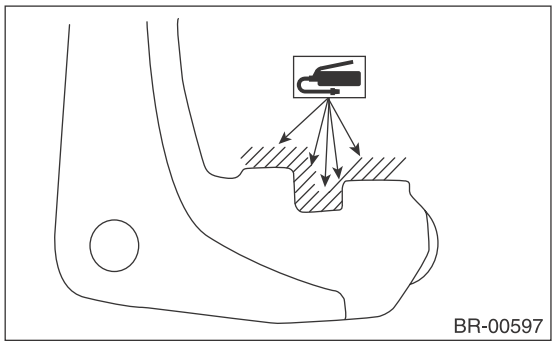

2) Install the support to the housing.

Tightening torque:
66 N·m (6.7 kgf-m, 48.7 ft-lb)

3) Apply a thin coat of Molykote M7439 (Part No. K0770YA000) or grease contained in the pad kit to the pad clip.

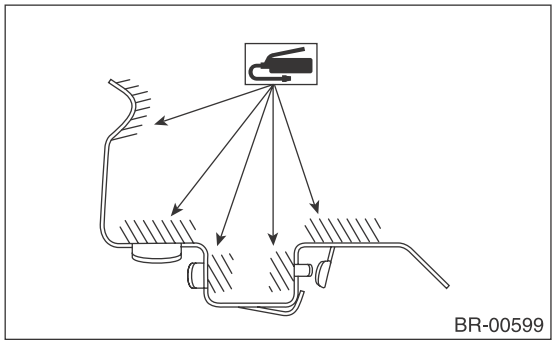

4) Apply a thin coat of Molykote AS880N (Part No. K0777YA010) or grease contained in the pad kit between the outer pad and shim.

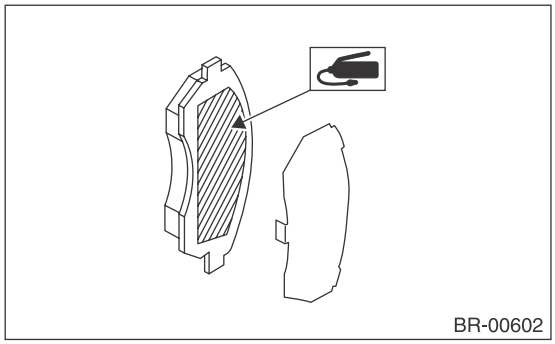

5) Apply a thin coat of Molykote AS880N (Part No. K0777YA010) or grease contained in the pad kit to both surfaces of the inner pad inner shim.

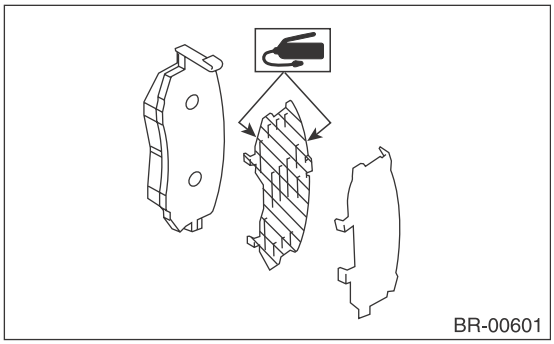

6) Install the pad to support.
7) Install the caliper body to the support.

Tightening torque:
27 N·m (2.8 kgf-m, 19.9 ft-lb)
8) Install the brake hose bracket.

Tightening torque:
33 N·m (3.4 kgf-m, 14.3 ft-lb)
9) Connect the brake hose using a new brake hose gasket.

Tightening torque:
18 N·m (1.8 kgf-m, 13.3 ft-lb)
10) Bleed air from the brake system.

C: DISASSEMBLY

1) Remove the piston boot.

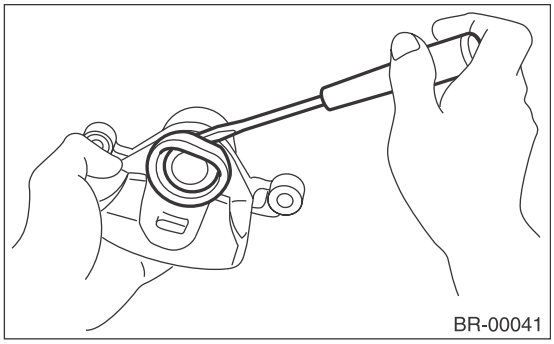

2) Place a wooden block in the caliper body as shown in the figure to prevent the piston from jumping out and being damaged.

3) Gradually apply compressed air via the brake hose installation hole to push the piston out.

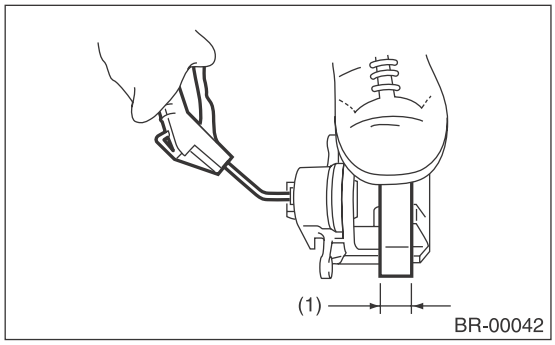

(1) Place a wooden block of 30 mm (1.18 in) width.

4) Remove the piston seal from caliper body cylinder.

CAUTION:
Do not damage the cylinder and piston seal groove.

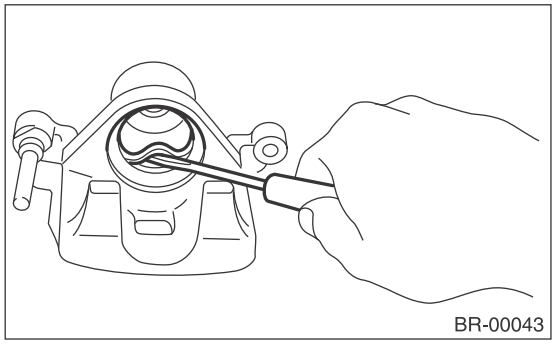

5) Remove the pin boot.

D: ASSEMBLY

1) Clean the inside of the caliper body using brake fluid.
2) Apply a coat of brake fluid to piston seal and install the piston seal to the caliper body groove.
3) Apply a coat of brake fluid to the inner surface of cylinder and the entire outer surface of the piston.
4) Apply grease contained in the piston seal kit to the boot, and install it to the groove at the end of the cylinder.
5) Insert the piston into cylinder.

CAUTION:
Do not force the piston into cylinder.

6) Position the boot in the grooves on piston and cylinder.

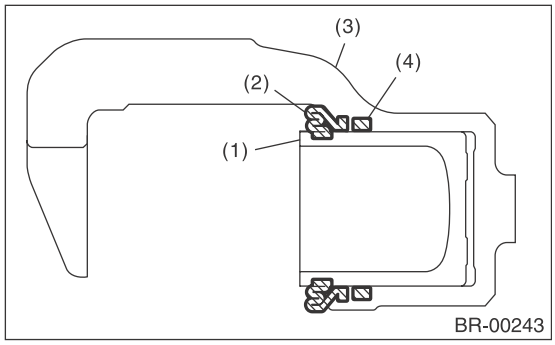

(1) Piston
(2) Piston boot
(3) Caliper body
(4) Piston seal

7) Apply grease contained in the piston seal kit to the cylinder inner surface, pin, bushing outer surface, and boot grooves.

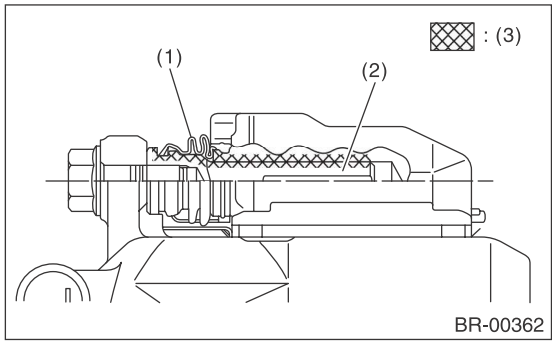

(1) Pin boot
(2) Lock pin or guide pin
(3) Grease applied area

8) Insert the pin boot to the support.
9) Install the pin boot to the support, and then insert the pin sleeve into the specified position.

CAUTION:
Insert the pin into specified position, and make sure that they slide and seat properly.

E: INSPECTION

1) Repair or replace the faulty parts.
2) Check the caliper body and piston for uneven wear, damage or rust.
3) Check the rubber parts for damage or deterioration.

8. Master Cylinder

A: REMOVAL

CAUTION:
Do not allow brake fluid to come in contact with vehicle body. If it does, wash off with water and wipe away completely.

1) Drain brake fluid from reservoir tank completely.
2) Disconnect the harness connector of the fluid level gauge.
3) Remove the brake pipe from the master cylinder.
4) Remove the master cylinder mounting nuts, and remove the master cylinder slowly from the brake booster.

CAUTION:
In order to prevent the contact of the bracket and check valve, be sure to loosen the master cylinder mounting nut while holding the bracket with hand. Otherwise it may deform the bracket.

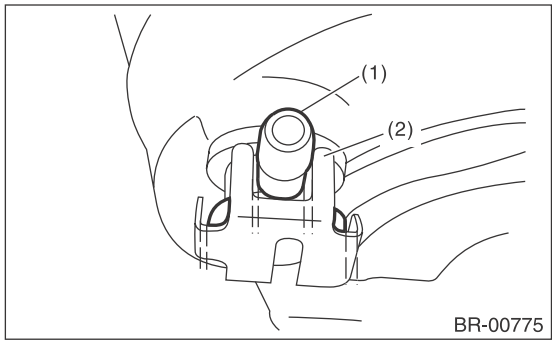

(1) Check valve
(2) Bracket

B: INSTALLATION

1) Replace the seal sub assembly for the master cylinder with a new part.

CAUTION:
Be careful not to install the seal sub assembly in the wrong location.

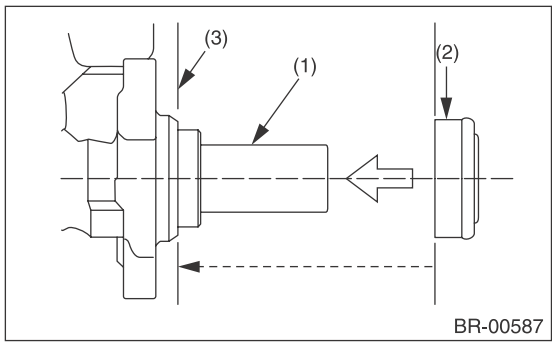

(1) Primary piston
(2) Seal sub ASSY
(3) Install the seal sub assembly to this surface.

2) Install in the reverse order of removal.

CAUTION:
• Install the bracket at the position with sufficient clearance that it does not contact with the check valve.
• Be sure to loosen the master cylinder mounting nut while holding the bracket with hand. Otherwise the bracket may deform.

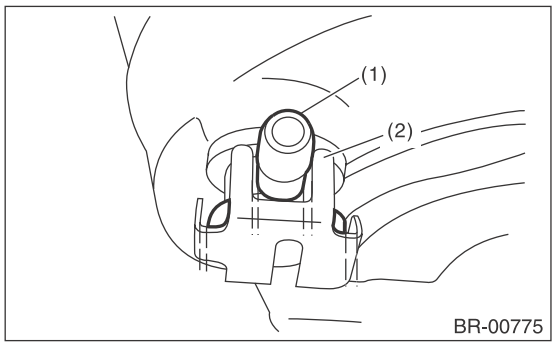

(1) Check valve
(2) Bracket

Tightening torque:
Master cylinder mounting nut
13 N·m (1.3 kgf-m, 9.6 ft-lb)
Piping flare nut
19 N·m (1.9 kgf-m, 14 ft-lb)

3) Bleed air from brake system. <Ref. to BR-34, PROCEDURE, Air Bleeding.>

CAUTION:
Be sure to use recommended brake fluid.

C: REPLACEMENT

CAUTION:
Since the master cylinder assembly cannot be disassembled, disassembly and cleaning are prohibited. When replacing, replace the master cylinder assembly.

9. Brake Booster

A: REMOVAL

1) Remove or disconnect the following parts in the engine compartment.
(1) Disconnect the connector of brake fluid level gauge.
(2) Remove the brake pipe from the master cylinder.
(3) Remove the master cylinder installation nut.

CAUTION:
In order to prevent the contact of the bracket and check valve, be sure to loosen the master cylinder mounting nut while holding the bracket with hand. Otherwise it may deform the bracket.

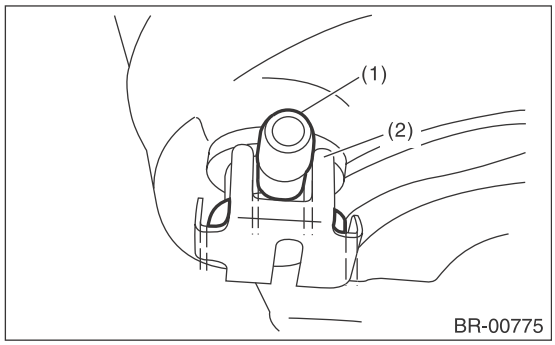

(1) Check valve
(2) Bracket

(4) Disconnect the vacuum hose from brake booster.
2) Remove the following parts from the pedal bracket.
(1) Snap pin and clevis pin
(2) Four brake booster installation nuts

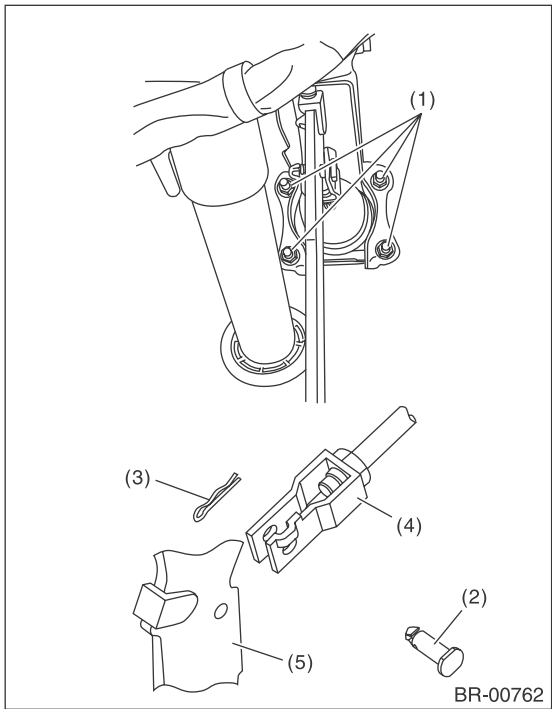

(1) Nut
(2) Clevis pin
(3) Snap pin
(4) Operating rod
(5) Brake pedal

3) Remove the brake booster while avoiding the brake pipe.

NOTE:
• Make sure that the booster shell and vacuum pipe are not subject to strong impacts.
• Be careful not to drop the brake booster. If the booster is dropped, replace it.
• Use special care when handling the operating rod. If excessive force is applied to the operating rod, the angle may change by ±3°, and it may result in damage to power piston cylinder.
• Be careful when placing the brake booster on floor.
• Do not change the push rod length.

CAUTION:
• **Do not disassemble the brake booster.**

• If external force is applied from above when brake booster is placed in this position, the resin portion as indicated by "P" may become damaged.

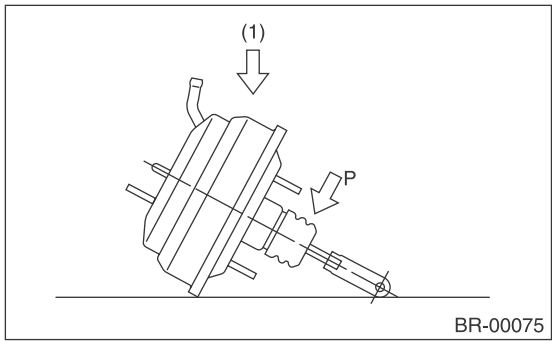

(1) Force

B: INSTALLATION

1) Check and adjust the operating rod of the brake booster.

Specification L:
136.5 mm (5.37 in)

If it is out of specification, adjust it with the brake booster operating rod.

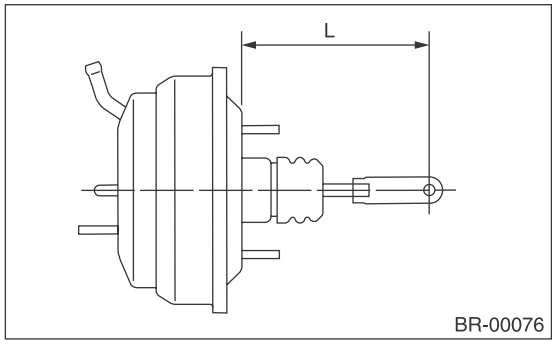

2) Mount the brake booster in position.
3) Tighten the brake booster mounting nuts.

Tightening torque:
18 N·m (1.8 kgf-m, 13.3 ft-lb)

4) Install the clevis pin and snap pin which secure the operating rod and brake pedal.

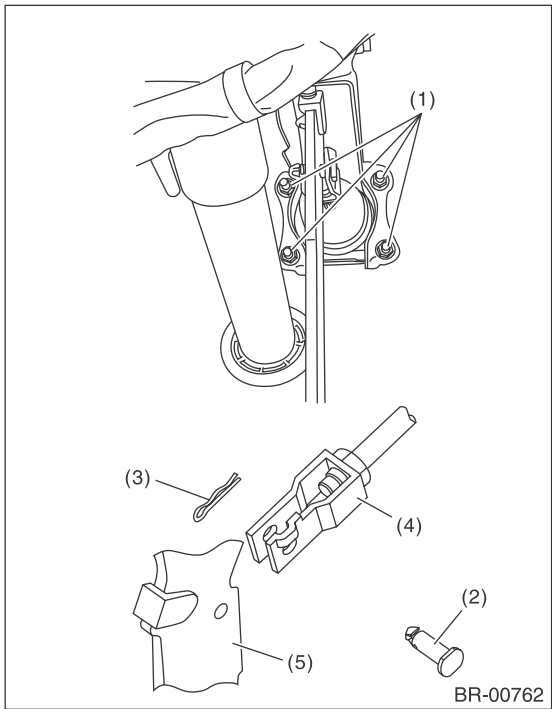

(1) Nut
(2) Clevis pin
(3) Snap pin
(4) Operating rod
(5) Brake pedal

NOTE:
• Replace the clevis pin with a new part.
• Apply NIGTIGHT LYW NO. 2 grease to the clevis pin.

5) Connect the vacuum hose to the brake booster.
6) After replacing the seal sub assembly with a new part, install the master cylinder to brake booster.

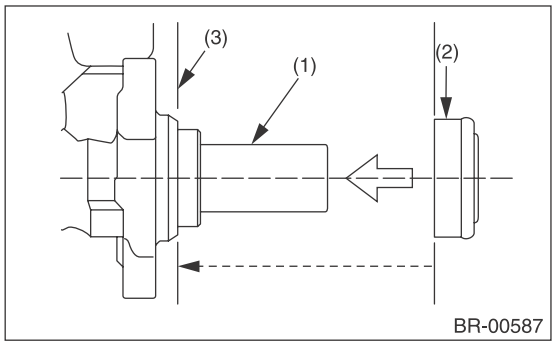

(1) Primary piston
(2) Seal sub ASSY
(3) Install the seal sub assembly to this surface.

Tightening torque:
13 N·m (1.3 kgf-m, 9.6 ft-lb)

CAUTION:
• Install the bracket at the position with sufficient clearance that it does not contact with the check valve.
• Be sure to loosen the master cylinder mounting nut while holding the bracket with hand. Otherwise the bracket may deform.

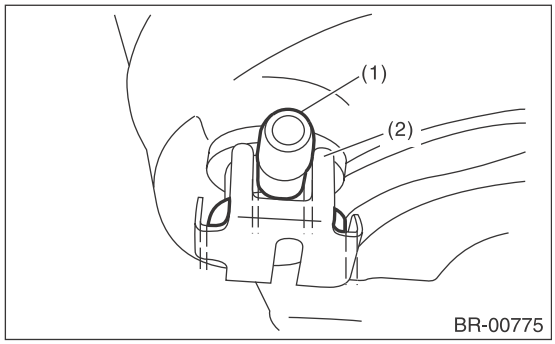

(1) Check valve
(2) Bracket

7) Connect the brake pipes to the master cylinder.

Tightening torque:
19 N·m (1.9 kgf-m, 14 ft-lb)
8) Connect the connector of the brake fluid level gauge.
9) Apply grease to the operating rod connecting pin to prevent it from wear.
10) Bleed air from brake system.

Tightening torque (air bleeder screw):
8 N·m (0.8 kgf-m, 5.9 ft-lb)
11) Perform the road test to make sure the brakes do not drag.

C: INSPECTION

1. OPERATION CHECK (WITHOUT GAUGES)

CAUTION:
When checking operation, be sure to apply the parking brake securely.

• Check without gauges

This method can not determine exactly what part is defective. But it is possible to identify the outline of the defect by performing the check according to the following procedures.

• AIR TIGHTNESS CHECK

Start the engine, and idle it for 1 to 2 minutes, then turn it OFF. Depress the brake pedal several times applying the normal pedal force. The pedal stroke should be the longest at the 1st depression, and it should become shorter at each successive depression. If no change occurs in the pedal height when pressed, the brake booster is faulty.

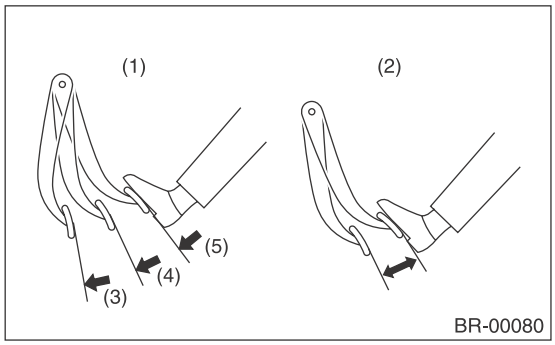

(1) Normal
(2) Not OK
(3) 1st
(4) Second
(5) 3rd

NOTE:
• In case of defective operation, inspect the condition of the check valve and vacuum hose as well.
• Replace them if faulty, and perform the test again.
• If no improvement is observed, check precisely with gauges.

• CHECK OPERATION.

1) While the engine is OFF, depress the brake pedal several times applying the same pedal force, to check for a change in pedal height.

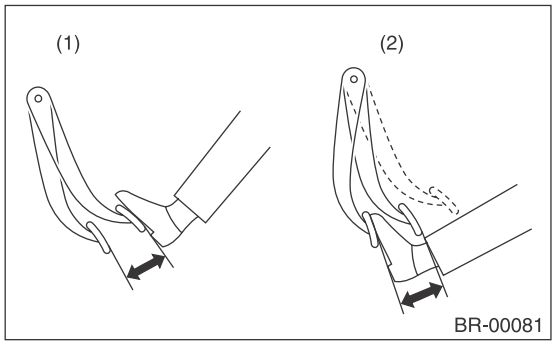

(1) When engine is stopped
(2) When engine is started

2) With the brake pedal depressed, start the engine.

3) As the engine starts, the brake pedal should move slowly toward the floor. If the pedal height does not change, the brake booster is faulty.

NOTE:
If faulty, check precisely with gauges.

• LOADED AIR TIGHTNESS CHECK

Depress the brake pedal while the engine is running, and turn the engine to OFF while the pedal is depressed. Keep the pedal depressed for 30 seconds. If the pedal height does not change, the function of brake booster is normal. If the pedal height increases, it is faulty.

NOTE:
If faulty, check precisely with gauges.

2. OPERATION CHECK (WITH GAUGES)

CAUTION:
When checking operation, be sure to apply the parking brake securely.

• CHECK WITH GAUGE

Connect the gauge as shown in the figure. After bleeding air from pressure gauge, perform each check.

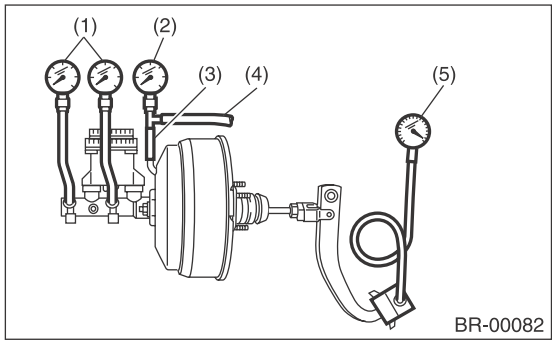

(1) Pressure gauge
(2) Vacuum gauge
(3) Adapter hose
(4) Vacuum hose
(5) Pedal force gauge

• AIR TIGHTNESS CHECK

1) Start the engine and keep it running until vacuum pressure indicates point A of the vacuum gauge = 66.7 kPa (500 mmHg, 19.69 inHg). Do not depress the brake pedal at this time.

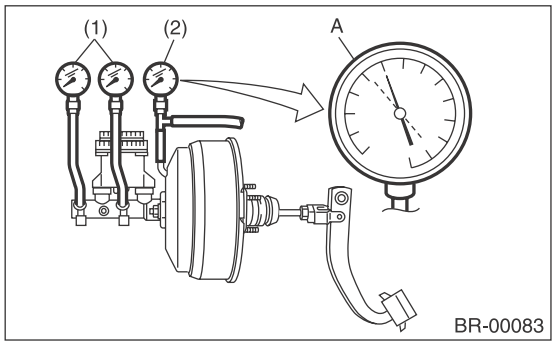

(1) Pressure gauge
(2) Vacuum gauge

2) Stop the engine and check the gauge. If the vacuum pressure drop within 15 seconds after stopping the engine is 3.3 kPa (25 mmHg, 0.98 inHg) or less, the function of brake booster is normal.
If faulty, the cause may be one of the following.
- Check valve malfunction
- Leak from vacuum hose
- Leak from shell joint section or stud bolt welded section
- Damaged diaphragm
- Leak from valve body seal and bearing section
- Leak from plate and seal assembly section
- Leak from poppet valve assembly section

• LOADED AIR TIGHTNESS CHECK

1) Start the engine and depress the brake pedal with a pedal force of 196 N (20 kgf, 44 lbf). Keep the engine running and keep the pedal pressed until a vacuum of point B = 66.7 kPa (500 mmHg, 19.69 inHg) is indicated on the vacuum gauge.

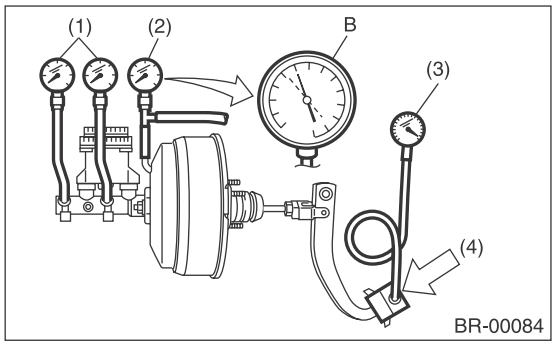

(1) Pressure gauge
(2) Vacuum gauge
(3) Pedal force gauge
(4) Depressed

2) Stop the engine and check the vacuum gauge.
If the vacuum pressure drop within 15 seconds after stopping the engine is 3.3 kPa (25 mmHg, 0.98 inHg) or less, the function of brake booster is normal.
If defective, refer to “Air tightness check”. <Ref. to BR-30, INSPECTION, Brake Booster.>
3) If the brake booster is faulty, replace it with a new part.

• LACK OF BOOST ACTION CHECK

Turn the engine OFF, and set the value of the vacuum gauge to “0”. Then, check the fluid pressure when the brake pedal is depressed. The pressure must be greater than the specification listed.

Brake pedal operation force N (kgf, lbf)		147 (15, 33)	294 (30, 66)
Fluid pressure kPa (kgf/cm^2, psi)	All models	533 (5, 77)	1,551 (16, 225)

• BOOSTING ACTION CHECK

Set the vacuum gauge reading to 66.7 kPa (500 mmHg, 19.69 inHg) with the engine running. Then, check the fluid pressure when the brake pedal is depressed. The pressure must be greater than the specification listed.

Brake pedal operation force N (kgf, lbf)		147 (15, 33)	294 (30, 66)
Fluid pressure kPa (kgf/cm^2, psi)	All models	6,177 (63, 896)	11,273 (115, 1,635)

10.Brake Fluid

A: INSPECTION

1) Check that the brake fluid level is between “MIN” and “MAX”. If out of the specified range, refill or drain fluid. If the fluid level is close to “MIN”, check the brake pad for wear and refill the fluid.
2) Check the fluid for discoloration. If the fluid color has changed excessively, drain the fluid and refill with new fluid.

B: REPLACEMENT

CAUTION:
• Do not let brake fluid come into contact with the painted surface of the vehicle body. Wash away with water immediately and wipe off if it is spilled by accident.
• Avoid mixing brake fluid of different brands to prevent fluid performance from degrading.
• Be careful not to allow dirt or dust to enter the reservoir tank.

NOTE:
• During the operation, keep the reservoir tank filled with brake fluid to eliminate entry of air.
• Operate the brake pedal slowly.
• For convenience and safety, two people should do the work.
• The required amount of brake fluid is approximately 500 mℓ (16.9 US fl oz, 17.6 Imp fl oz) for the entire brake system.
1) Lift up the vehicle and set rigid racks at the specified locations, or keep the vehicle lifted.
2) Remove both the front and rear wheels.
3) Drain brake fluid from the reservoir tank.
4) Refill the reservoir tank with the recommended brake fluid.

Recommended brake fluid:
Refer to the specification of “General Description”. <Ref. to BR-2, SPECIFICATION, General Description.>

Perform the same procedure as for bleeding the brake line, until new brake fluid comes out from vinyl tube. <Ref. to BR-34, PROCEDURE, Air Bleeding.>

11.Air Bleeding

A: PROCEDURE

CAUTION:
• Do not let brake fluid come into contact with the painted surface of the vehicle body. Wash away with water immediately and wipe off if it is spilled by accident.
• Avoid mixing brake fluid of different brands to prevent fluid performance from degrading.
• Be careful not to allow dirt or dust to enter the reservoir tank.

1. MASTER CYLINDER

NOTE:
• When the master cylinder is replaced or the reservoir tank is empty, bleed the master cylinder.
• If bleeding of the master cylinder is not necessary, omit the following procedures, and perform bleeding of the brake line. <Ref. to BR-34, BRAKE LINE, PROCEDURE, Air Bleeding.>
1) Fill the reservoir tank of the master cylinder with brake fluid.

NOTE:
While bleeding air, keep the reservoir tank filled with brake fluid to prevent entry of air.
2) Disconnect the brake line at primary and secondary sides.
3) Wrap the master cylinder with a plastic bag.
4) Depress the brake pedal slowly and hold it.

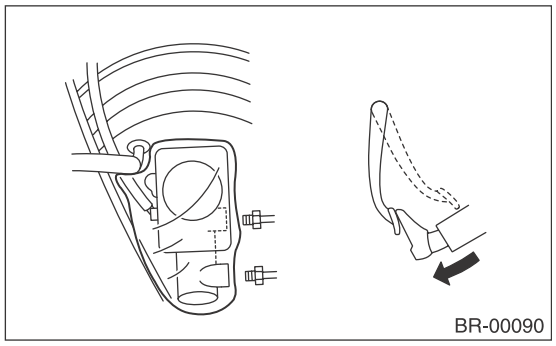
BR-00090

5) Plug the outlet plug with your finger, and then release the brake pedal.

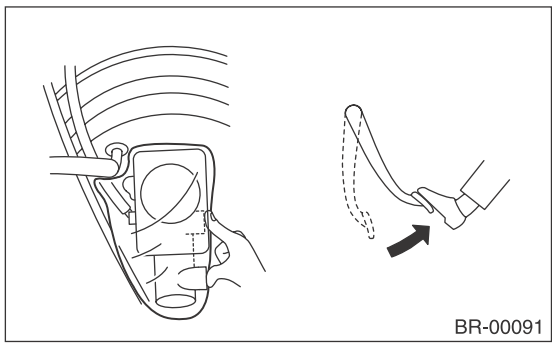
BR-00091

6) Repeat the step 4) and 5) several times.
7) Remove the plastic bag.
8) Install the brake pipe to the master cylinder.

Tightening torque:
19 N·m (1.9 kgf-m, 14 ft-lb)
9) Bleed air from the brake line. <Ref. to BR-34, BRAKE LINE, PROCEDURE, Air Bleeding.>

2. BRAKE LINE

1) When the master cylinder is replaced or the reservoir tank is empty, bleed the master cylinder before bleeding the brake line. <Ref. to BR-34, MASTER CYLINDER, PROCEDURE, Air Bleeding.>
2) Fill the reservoir tank of the master cylinder with brake fluid.

NOTE:
While bleeding air, keep the reservoir tank filled with brake fluid to prevent entry of air.
3) Attach one end of the vinyl tube to the air bleeder and the other end to the brake fluid container.

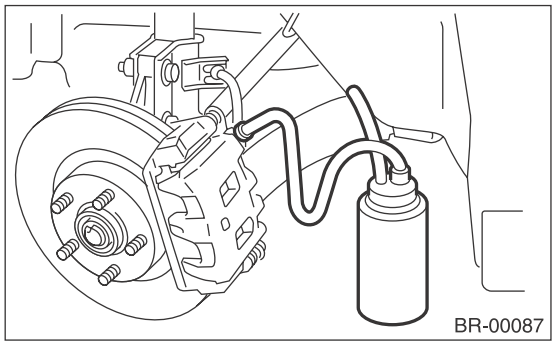
BR-00087

4) Depress the brake pedal several times, and keep it pressed.
5) Loosen the air bleeder screw to drain brake fluid. Tighten the air bleeder quickly, and release the brake pedal.
6) Repeat the steps 4) to 5) until there are no more air bubbles in the vinyl tube.
7) Repeat the steps from 2) to 6) above to bleed air from each wheel.

NOTE:
Perform the operation in the order starting from the farthest wheel cylinder from the master cylinder.
8) Securely tighten the air bleeder screws.

Tightening torque:
8 N·m (0.8 kgf-m, 5.9 ft-lb)
9) Check that there are no brake fluid leaks in the entire system.

10) Check the pedal stroke.
Run the engine at idle after warming up the engine, and depress the brake pedal with a force of 500 N (51 kgf, 112 lbf). Measure the distance between the brake pedal and steering wheel. Release the pedal, and measure the distance between pedal and steering wheel again.

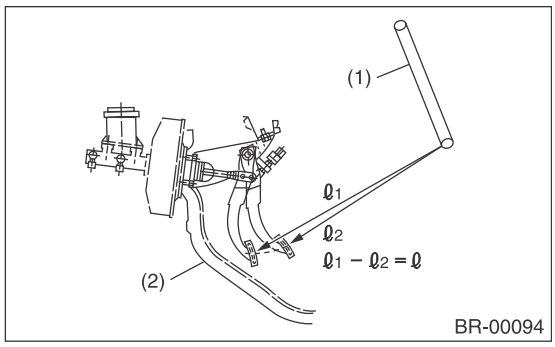

(1) Steering wheel
(2) Toe board

Specification of pedal stroke:
When depressing the pedal with a force of 500 N (51 kgf, 112 lbf).
100 mm (3.94 in) or less

11) If the distance is more than specification, there is a possibility of air being caught in the brake line. Bleed the brake line of all air until the pedal stroke meets the specification.
12) Operate the hydraulic control unit in the sequence control mode. <Ref. to VDC-12, ABS Sequence Control.>
13) Check the pedal stroke again.
14) If the distance is more than specification, there is a possibility of air being caught in the hydraulic unit. Repeat above steps 2) to 9) until the pedal stroke meets the specification.
15) Fill the reservoir tank with brake fluid up to the “MAX” level.
16) Test run the vehicle and ensure that the brakes operate normally.

12.Brake Hose

A: REMOVAL

1. FRONT BRAKE HOSE

1) Separate the brake pipe from brake hose using a flare nut wrench.
2) Remove the clamp, the strut mount bolts, and union bolt.

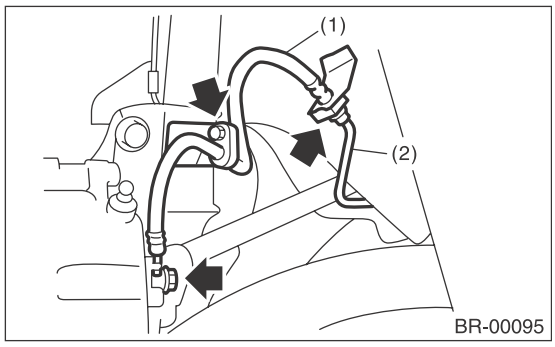

(1) Brake hose
(2) Brake pipe

2. REAR BRAKE HOSE

1) Remove the union bolt and brake hose bracket.

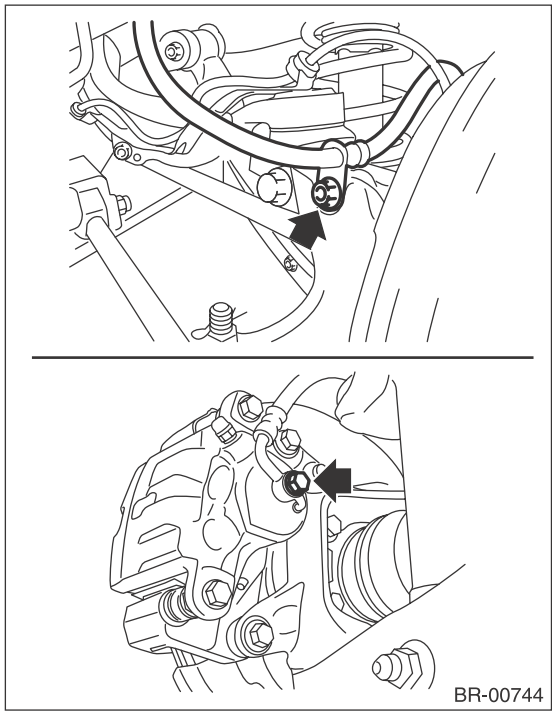

2) Separate the brake pipe from brake hose using a flare nut wrench.
3) Remove the clamp, and then remove the brake hose.

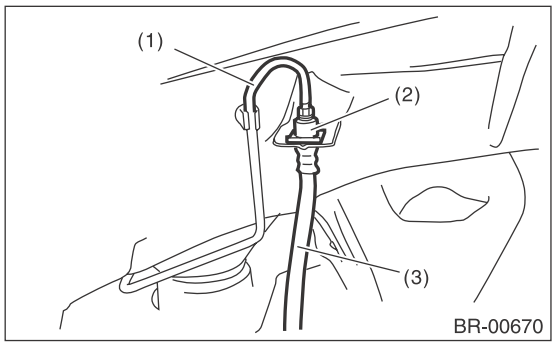

(1) Brake pipe
(2) Brake hose clamp
(3) Brake hose

B: INSTALLATION

1. FRONT BRAKE HOSE

1) Secure the brake hose to strut mount.

Tightening torque:
33 N·m (3.4 kgf-m, 24.3 ft-lb)

2) Install the brake hose to the caliper using a new gasket.

Tightening torque:
Union bolt
18 N·m (1.8 kgf-m, 13.3 ft-lb)

3) Position the disc in straight position and route the brake hose through the hole in the bracket on the wheel apron side.

CAUTION:
Do not twist the brake hose.

4) Temporarily tighten the flare nut which connects brake pipe and hose.
5) Secure the brake hose to wheel apron bracket with clamp.
6) Tighten the flare nut to the specified torque.

Tightening torque:
Brake pipe flare nut
15 N·m (1.5 kgf-m, 11.1 ft-lb)

7) Bleed air from the brake system.

2. REAR BRAKE HOSE

1) Route the brake hose through the hole of bracket, and lightly tighten the flare nut to connect brake pipe.
2) Insert the clamp to secure brake hose.

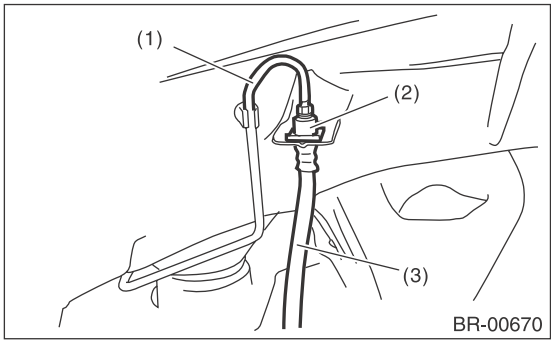

(1) Brake pipe
(2) Brake hose clamp
(3) Brake hose

3) Install the brake hose to rear brake caliper using a new gasket.

Tightening torque:
Union bolt
18 N·m (1.8 kgf-m, 13.3 ft-lb)
Frame hose bracket
33 N·m (3.4 kgf-m, 24.3 ft-lb)

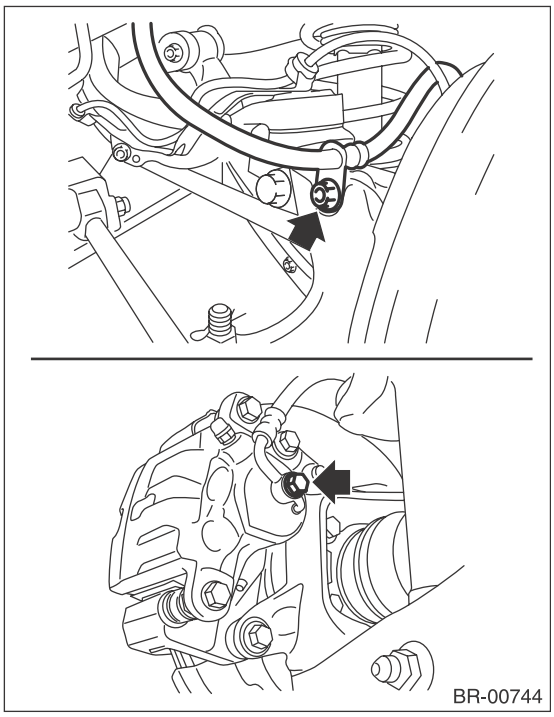

4) Tighten the flare nut to the specified torque.

Tightening torque:
Brake pipe flare nut
15 N·m (1.5 kgf-m, 11.1 ft-lb)
5) Bleed air from the brake system.

C: INSPECTION

Make sure there are no cracks, breakage or damage on hoses. Check the joint for fluid leakage. If any cracks, breakage, damage or fluid leakage is found, repair or replace the hose.

13.Brake Pipe

A: REMOVAL

NOTE:
The airbag system wiring harness is routed near the center brake pipe.

CAUTION:
• The airbag system wiring harness and connectors are colored yellow. Do not use electrical test equipment on these circuits.
• Be careful not to damage the airbag system wiring harness when servicing the center brake pipe.
• When removing the brake pipe, do not bend.

B: INSTALLATION

NOTE:
The airbag system wiring harness is routed near the center brake pipe.

CAUTION:
• The airbag system wiring harness and connectors are colored yellow. Do not use electrical test equipment on these circuits.
• Be careful not to damage the airbag system wiring harness when servicing the center brake pipe.
• When installing the brake pipe, do not bend.
• After installing the brake pipe and hose, perform air bleed.
• After installing the brake hoses, make sure that they do not contact the tires or suspension assembly, etc.

Brake pipe tightening torque:
Refer to "COMPONENT" of "General Description". <Ref. to BR-7, FRONT BRAKE PIPES AND HOSES, COMPONENT, General Description.> <Ref. to BR-8, CENTER AND REAR BRAKE PIPES AND HOSES, COMPONENT, General Description.>

C: INSPECTION

Make sure there are no cracks, breakage or damage on hoses. Check the joint for fluid leakage. If any cracks, breakage, damage or fluid leakage is found, repair or replace the pipes.

NOTE:
Use a mirror when inspecting back sides and other locations which are hard to see.

14.Brake Pedal

A: REMOVAL

1. AT MODEL

1) Disconnect the connector from stop light switch.
2) Remove the clevis pin which secures the brake pedal and the operating rod.

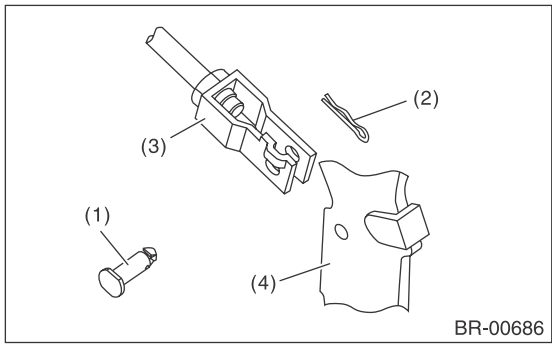

(1) Clevis pin
(2) Snap pin
(3) Operating rod
(4) Brake pedal

3) Remove the bolt and nut which secures the brake pedal bracket.

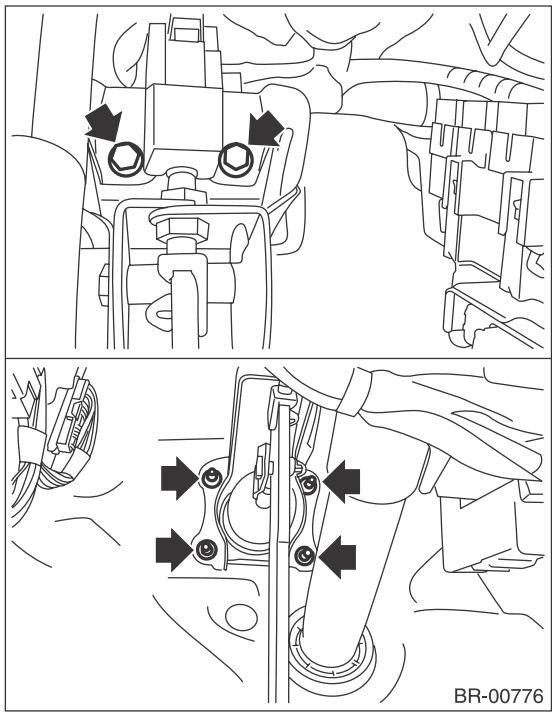

2. MT MODEL

Refer to “CLUTCH PEDAL”. <Ref. to CL-26, REMOVAL, Clutch Pedal.>

B: INSTALLATION

1. AT MODEL

1) Install the bolt and nut which secures the brake pedal bracket.

Tightening torque:
18 N·m (1.8 kgf-m, 13.3 ft-lb)

2) Install the clevis pin and snap pin which secure the operating rod and brake pedal.

NOTE:
- Replace the clevis pin with a new part.
- Apply NIGTIGHT LYW NO. 2 grease to the clevis pin.

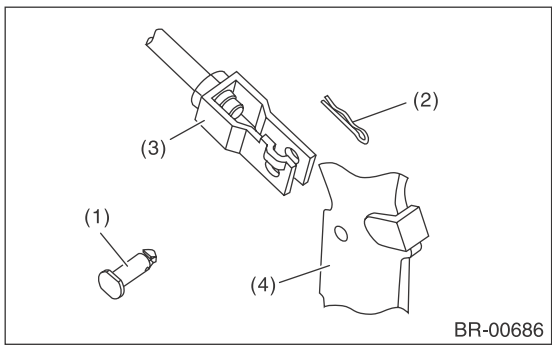

(1) Clevis pin
(2) Snap pin
(3) Operating rod
(4) Brake pedal

3) Connect the stop light switch connector.
4) Check the brake light illumination condition.
5) Check the brake pedal after installation. <Ref. to BR-40, INSPECTION, Brake Pedal.>

2. MT MODEL

Refer to “CLUTCH PEDAL”. <Ref. to CL-26, INSTALLATION, Clutch Pedal.>

C: INSPECTION

1) Move the brake pedal pads in a horizontal direction with a force of approx. 10 N (1 kgf, 2 lbf), and check that the pedal deflection is in the range of specifications.

CAUTION:
If excessive deflection is noted, replace with a new bushing.

Deflection of brake pedal:
Limit
5.0 mm (0.197 in) or less

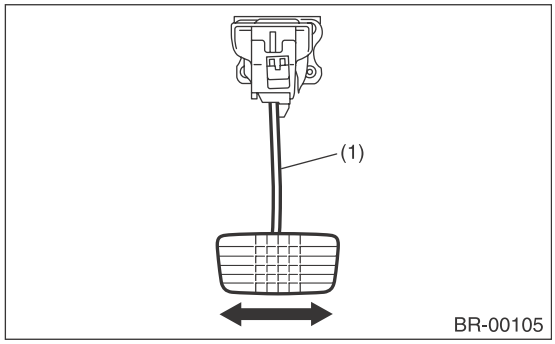

(1) Brake pedal

2) Check the position of the pedal pad.

Pedal height L:
140 — 150 mm (5.51 — 5.91 in)

Brake pedal free play A:
2 — 5 mm (0.079 — 0.197 in) [When pulling the brake pedal upward with a force of less than 10 N (1 kgf, 2 lbf).]

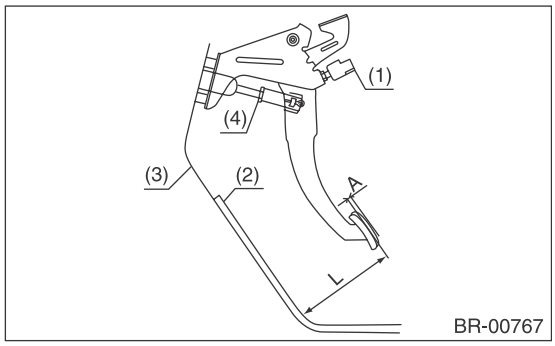

(1) Stop light switch
(2) Mat
(3) Toe board
(4) Brake booster operating rod

3) If it is not within the specification, loosen the lock nuts of brake booster operating rod, and rotate the rod to adjust the pedal height L within the specification.
4) Tighten the lock nut.

Tightening torque:
22 N·m (2.2 kgf-m, 16.2 ft-lb)

15.Stop Light Switch

A: REMOVAL

1) Disconnect the ground cable from battery.
2) Disconnect the stop light switch connector.
3) Loosen the nuts, unscrew the stop light switch, and remove stop light switch.

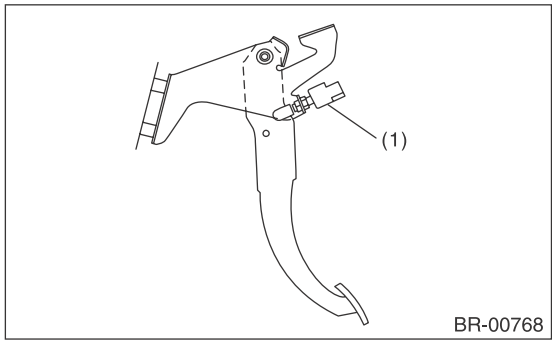

(1) Stop light switch

B: INSTALLATION

1) Install the stop light switch onto the bracket with screws and position it with the nut.
2) Adjust the stop light switch position, and then tighten the nut. <Ref. to BR-42, ADJUSTMENT, Stop Light Switch.>

Tightening torque:
8 N·m (0.8 kgf-m, 5.9 ft-lb)

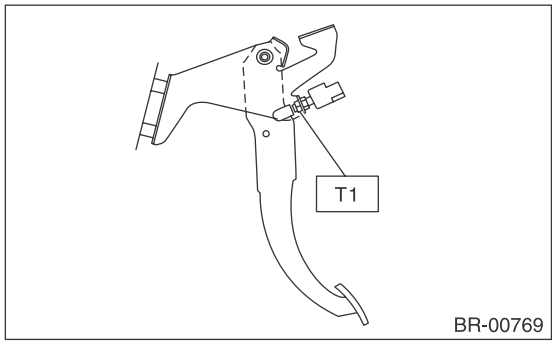

C: INSPECTION

1. CHECK SPECIFIED POSITION

1) If the stop light switch does not operate properly (or if it is not secured at the specified position), replace with a new part.

Specified position L:
2.8 mm$^{+1.5\ mm}_{-0\ mm}$ (0.11 in$^{+0.06\ in}_{-0\ in}$)

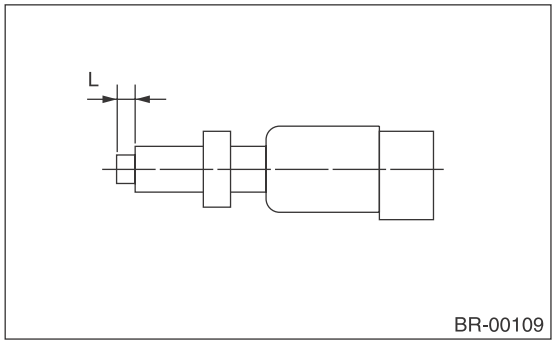

2) Measure the clearance between the threaded end of the stop light switch and the stopper.

CAUTION:
Be careful not to rotate the stop light switch.

Stop light switch clearance A:
0.8 mm (0.031 in)

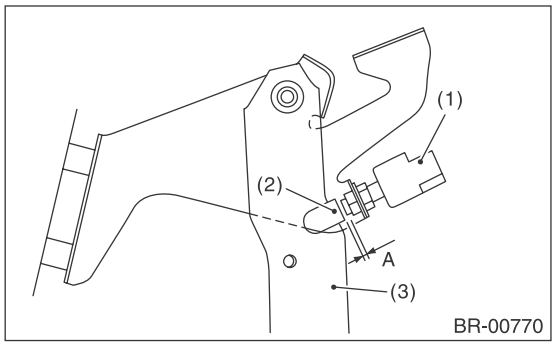

(1) Stop light switch
(2) Stopper
(3) Brake pedal

3) If it is not within the specification, adjust it by adjusting the position of the stop light switch.

CAUTION:
Be careful not to rotate the stop light switch.

2. CHECK RESISTANCE

1) Measure the resistance of stop light switch.

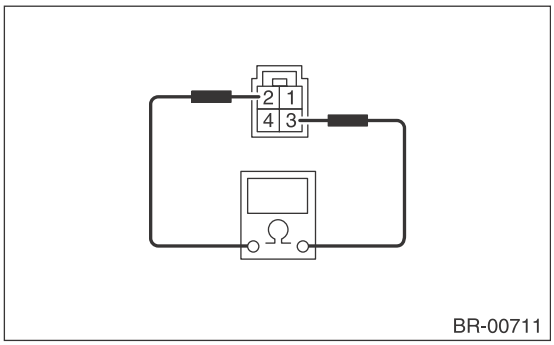

Switch	Pedal	Terminal No.	Standard
Stop light	Released	2 and 3	1 MΩ or more
	Depressed		Less than 1 Ω

2) If the stop light switch does not operate properly, replace with a new part.

D: ADJUSTMENT

Loosen the lock nut, and adjust the stop light switch position until the clearance between the threaded end of the stop light switch and stopper (A) becomes 0.8 mm (0.031 in). Then, tighten the lock nut.

Tightening torque:
8 N·m (0.8 kgf-m, 5.9 ft-lb)

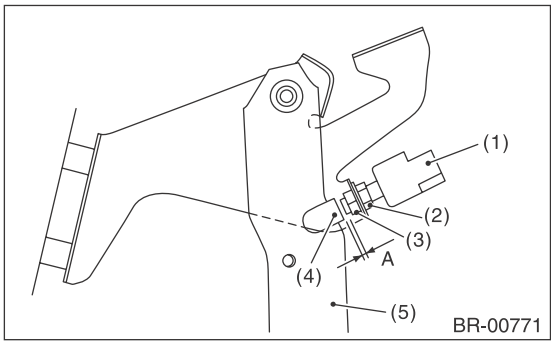

(1) Stop light switch
(2) Lock nut A
(3) Lock nut B
(4) Stopper
(5) Brake pedal

16.General Diagnostic Table

A: INSPECTION

	Trouble and possible cause	Corrective action
1. Insufficient braking	(1) Fluid leakage from the hydraulic mechanism	Correct or replace. (cup, piston seal, piston boot, master cylinder piston kit, pipe or hose)
	(2) Entry of air into the hydraulic mechanism	Bleed air.
	(3) Wear, deteriorated surface material, water or fluid on lining	Replace, grind or clean.
	(4) Improper operation of master cylinder, disc caliper, brake booster or check valve	Correct or replace.
2. Unstable or uneven braking	(1) Fluid on lining or rotor	Correct the cause of fluid leakage, and clean or replace.
	(2) Rotor defective	Repair or replace the rotor.
	(3) Improper lining contact, deteriorated surface, deteriorated or worn lining material	Repair by grinding, or replace.
	(4) Deformed back plate	Correct or replace.
	(5) Overinflation of tires	Adjust the air pressure.
	(6) Defective wheel alignment	Adjust alignment.
	(7) Loose back plate or support installation bolt	Tighten to the specified torque.
	(8) Faulty wheel bearing	Replace.
	(9) Defective hydraulic system	Replace the cylinder, brake pipe or hose.
	(10) Unstable performance of the parking brake	Check, adjust or replace the rear brake and cable system.
3. Excessive pedal stroke	(1) Entry of air into the hydraulic mechanism	Bleed air.
	(2) Excessive play in the master cylinder push rod	Adjust.
	(3) Fluid leakage from the hydraulic mechanism	Correct or replace. (cup, piston seal, piston boot, master cylinder piston kit, pipe or hose)
	(4) Improper lining contact or worn lining	Correct or replace.
4. Brake dragging or improper brake return	(1) Insufficient pedal play	Adjust play.
	(2) Improper master cylinder return	Clean or replace the cylinder.
	(3) Clogged hydraulic system	Replace.
	(4) Improper return or adjustment of parking brake	Repair or adjust.
	(5) Weakened spring tension or breakage of shoe return spring	Replace the spring.
	(6) Improper disc caliper operation	Correct or replace.
	(7) Faulty wheel bearing	Replace.
5. Brake noise (1) (creaking sound)	(1) Hardened or deteriorated brake pad	Replace the pad.
	(2) Worn brake pad	Replace the pad.
	(3) Loose back plate or support installation bolt	Tighten to the specified torque.
	(4) Loose wheel bearing	Tighten to the specified torque.
	(5) Dirty rotor	Clean the rotor, or clean and replace brake assembly.
6. Brake noise (2) (hissing sound)	(1) Worn brake pad	Replace the pad.
	(2) Improperly installed pad	Correct or replace the pad.
	(3) Loose or bent rotor	Retighten or replace.
7. Brake noise (3) (click sound)	Excessively worn pad or support	Replace the pad or the support.

PARKING BRAKE

PB

Page

1. General Description 2
2. Parking Brake Actuator 5
3. Parking Brake Assembly (Rear Disc Brake) 6
4. Parking Brake Switch 9
5. Emergency Release of Electronic Parking Brake 10
6. General Diagnostic Table 11

1. General Description

A: SPECIFICATION

Model		Rear disc brake
Type		Electronic type, drum in disc brakes
Effective drum diameter	mm (in)	190 (7.48)
Lining dimensions (Length × Width × Thickness)	mm (in)	165.8 × 30.0 × 2.8 (6.53 × 1.181 × 0.11)
Clearance adjustment		Manual adjustment

B: COMPONENT

1. PARKING BRAKE (REAR DISC BRAKE)

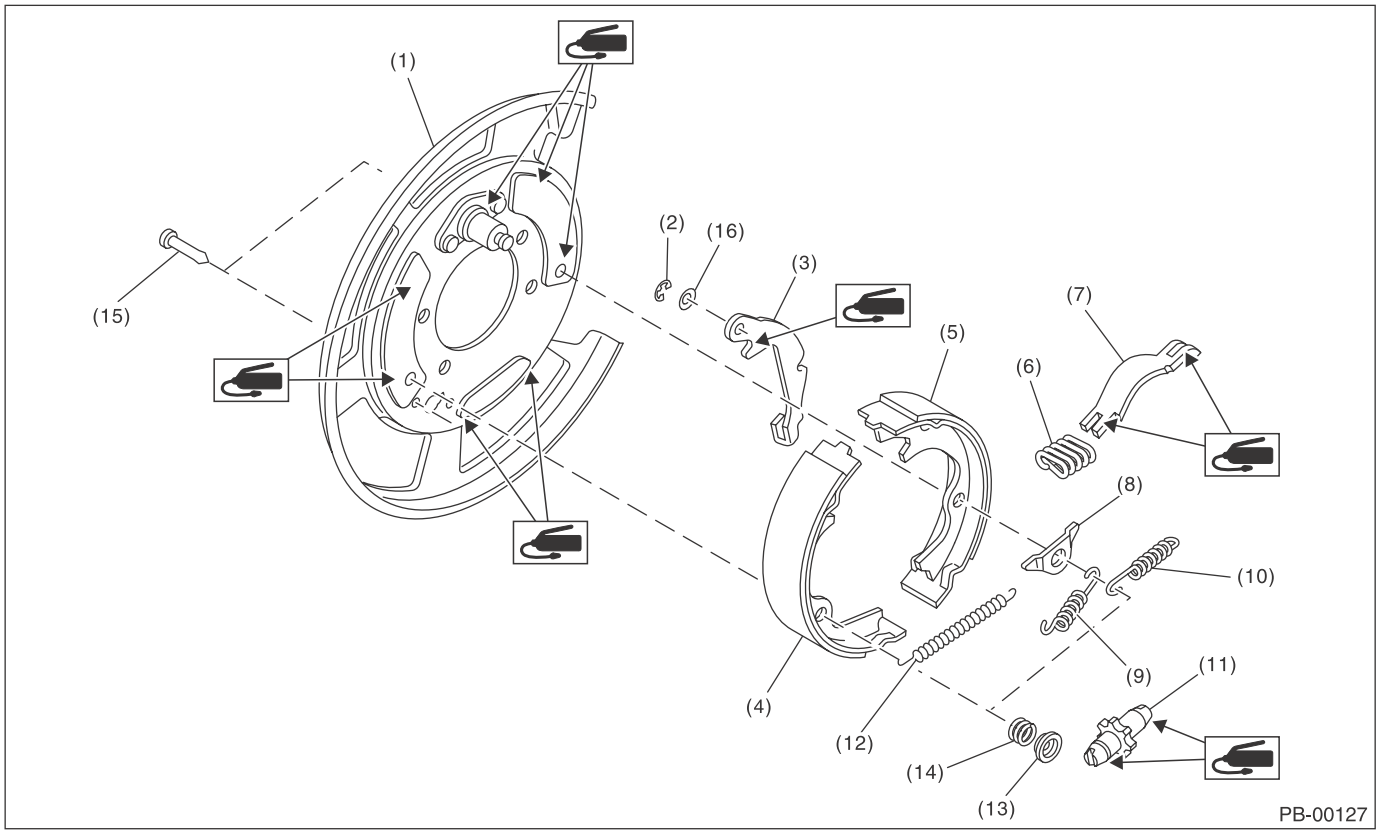

(1) Back plate
(2) Retainer
(3) Lever
(4) Parking brake shoe (Primary)
(5) Parking brake shoe (Secondary)
(6) Strut spring
(7) STRUT
(8) Shoe guide plate
(9) Primary return spring
(10) Secondary return spring
(11) Adjuster
(12) Adjusting spring
(13) Shoe hold-down cup
(14) Shoe hold-down spring
(15) Shoe hold-down pin
(16) Wave washer

2. PARKING BRAKE ACTUATOR

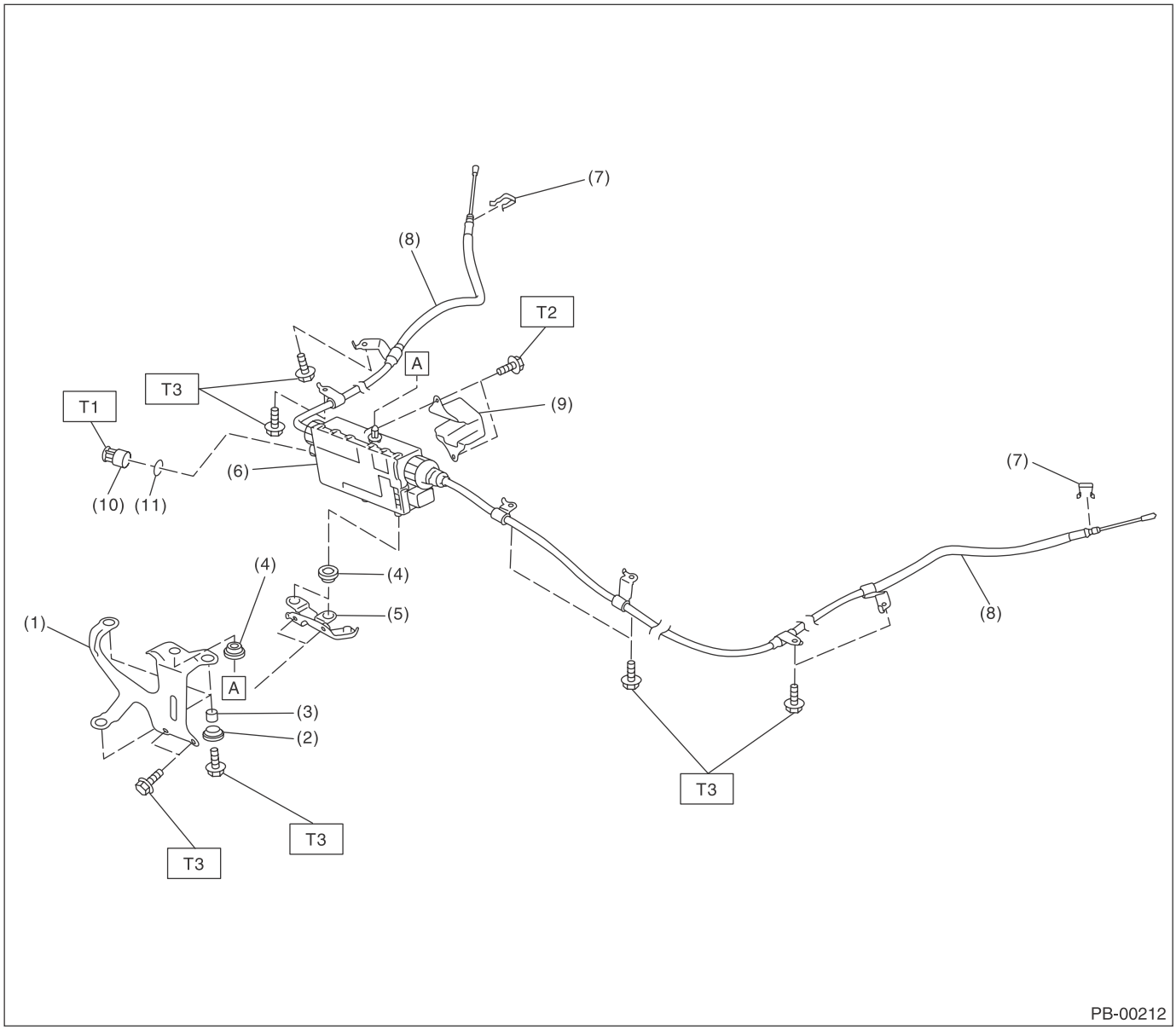

(1) Upper bracket
(2) Bushing
(3) Spacer
(4) Bushing
(5) Bracket
(6) Brake actuator
(7) Clamp
(8) Parking Brake Cable
(9) Tank bracket
(10) Cap
(11) O-ring

Tightening torque:N·m (kgf-m, ft-lb)
T1: 3 (0.3, 2.2)
T2: 7.5 (0.76, 5.5)
T3: 18 (1.8, 13.3)

C: CAUTION

- Wear appropriate work clothing, including a cap, protective goggles and protective shoes when performing any work.
- Before removal, installation or disassembly, be sure to clarify the failure. Avoid unnecessary removal, installation, disassembly and replacement.
- Vehicle components are extremely hot after driving. Be wary of receiving burns from heated parts.
- Use SUBARU genuine grease etc. or equivalent. Do not mix grease etc. of different grades or manufacturers.
- Be sure to tighten fasteners including bolts and nuts to the specified torque.
- Place shop jacks or rigid racks at the specified points.
- Make sure grease does not come into contact with the parking shoes.

D: PREPARATION TOOL

1. ST

ILLUSTRATION	TOOL NUMBER	DESCRIPTION	REMARKS
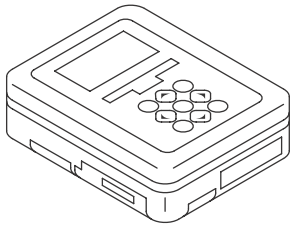 ST1B022XU0	1B022XU0	SUBARU SELECT MONITOR III KIT	Used for setting of each function and trouble-shooting for electrical system.

2. GENERAL TOOL

TOOL NAME	REMARKS
Circuit tester	Used for measuring resistance, voltage and current.

2. Parking Brake Actuator

A: REMOVAL

CAUTION:
Since the parking brake actuator and parking brake cable are integrated as a unit, do not disassemble them.

1) Lift up the vehicle, and then remove the rear wheels.
2) Perform “Parking Brake Removal Mode” after connecting the Subaru Select Monitor. <Ref. to PB(diag)-17, PARKING BRAKE REMOVAL MODE, OPERATION, Subaru Select Monitor.>

CAUTION:
Be sure to lift up the vehicle, before performing the “Parking Brake Removal Mode”.

3) Disconnect the ground cable from battery.
4) Remove the fuel tank protector.

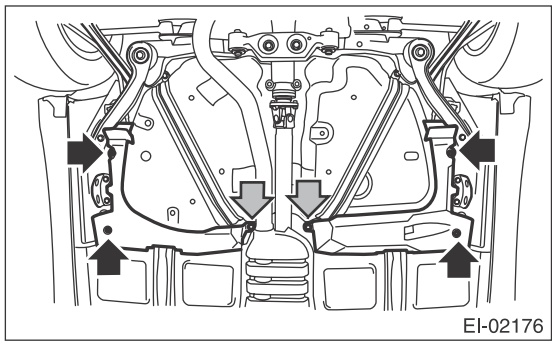

5) Remove the parking brake cable from parking brake assembly. <Ref. to PB-6, REMOVAL, Parking Brake Assembly (Rear Disc Brake).>
6) Remove the cable clamp.

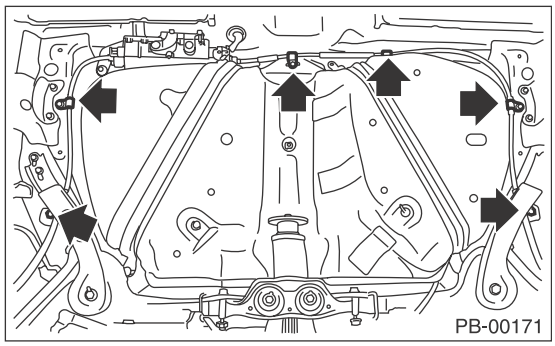

7) Press the lock (1), and move the lever (2) to disconnect the parking brake actuator connector.

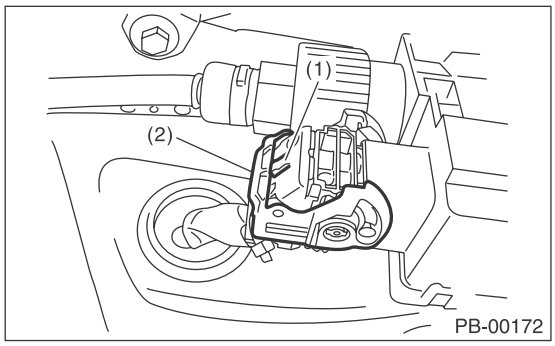

8) Remove the bolts and remove the parking brake actuator.

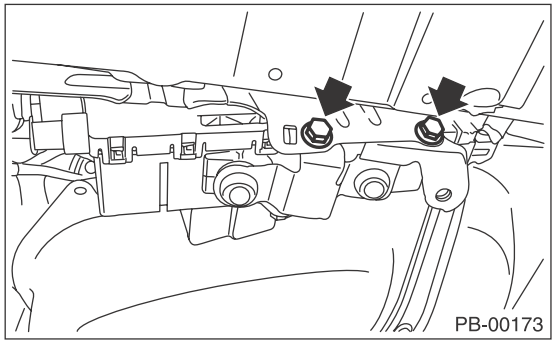

B: INSTALLATION

1) Install in the reverse order of removal.

Tightening torque:
<Ref. to PB-3, PARKING BRAKE ACTUATOR, COMPONENT, General Description.>

2) Park the vehicle at a level ground with the four wheels on the ground.
3) Connect the Subaru Select Monitor to perform the following operations.

- “Force Sensor Calibration Mode”<Ref. to PB(diag)-17, FORCE SENSOR CALIBRATION MODE, OPERATION, Subaru Select Monitor.>
- “Clutch Sensor Calibration Mode” (only MT model) <Ref. to PB(diag)-19, CLUTCH SENSOR CALIBRATION MODE, OPERATION, Subaru Select Monitor.>

3. Parking Brake Assembly (Rear Disc Brake)

A: REMOVAL

1) Lift up the vehicle, and then remove the rear wheels.
2) Perform “Parking Brake Removal Mode” after connecting the Subaru Select Monitor. <Ref. to PB(diag)-17, PARKING BRAKE REMOVAL MODE, OPERATION, Subaru Select Monitor.>

CAUTION:
Be sure to lift up the vehicle, before performing the “Parking Brake Removal Mode”.
3) Disconnect the ground cable from battery.
4) Remove the brake hose bracket.

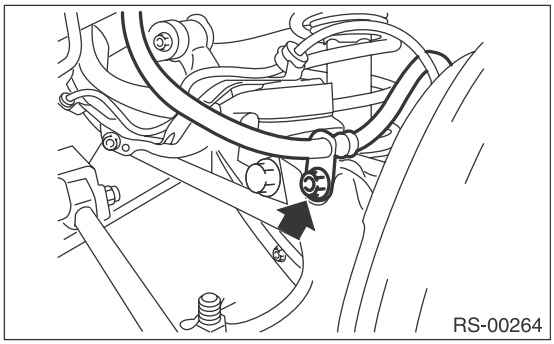
RS-00264

5) Remove the two mounting bolts and remove the rear disc brake caliper.

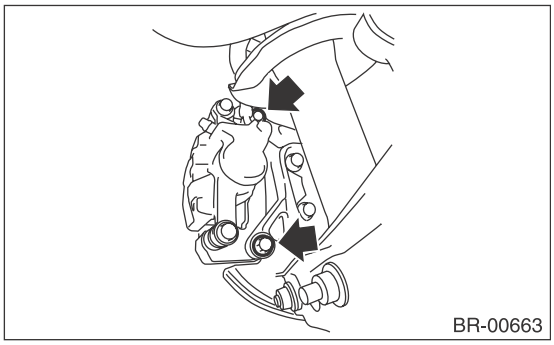
BR-00663

6) Suspend the rear disc brake caliper so that the brake hose is not stretched.
7) Remove the rear disc brake rotor.

NOTE:
If the disc rotor is difficult to remove, try the following two methods in order.

(1) Turn the adjusting screw using a flat tip screwdriver until the brake shoe moves adequately away from the disc rotor.

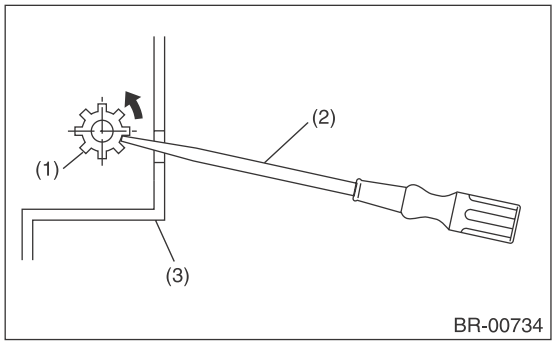

BR-00734

(1) Adjuster
(2) Flat tip screwdriver
(3) Disc rotor

(2) If disc rotor is seized on the hub, drive the disc rotor out by pushing two 8 mm bolts in holes B on the rotor.

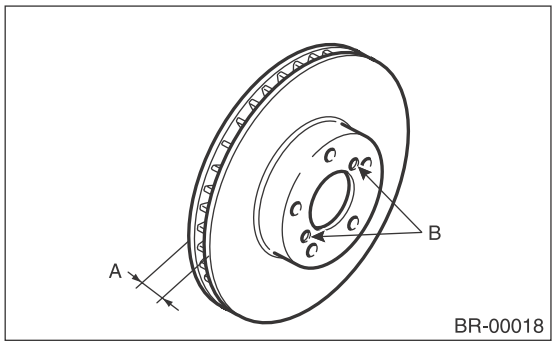

BR-00018

8) Remove the shoe return spring.

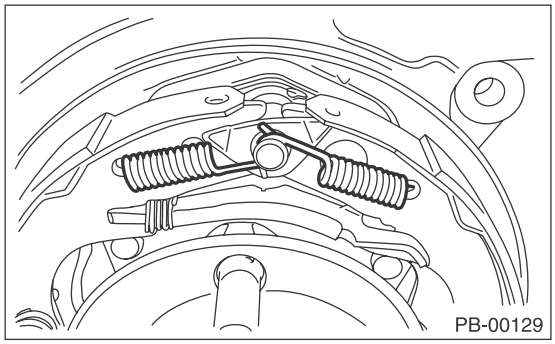
PB-00129

9) Detach the brake shoe cup and brake shoe spring, and remove the primary brake shoe.

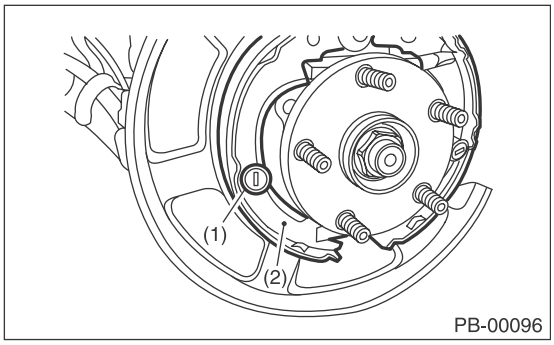

(1) Brake shoe cup
(2) Primary brake shoe

10) Remove the strut and strut spring.
11) Remove the adjuster.
12) Detach the brake shoe cup and brake shoe spring, and remove the secondary brake shoe.
13) Remove the parking brake cable from lever.

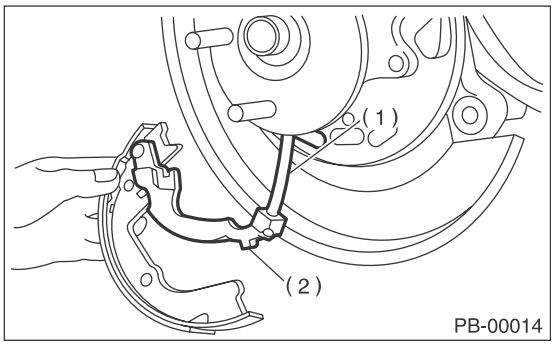

(1) Parking Brake Cable
(2) Lever

14) Remove the retainer from the secondary side brake shoe. Remove the brake shoe from the lever.
15) Remove the clamp and, remove the parking brake cable from the back plate.

B: INSTALLATION

1) Install the parking brake cable to the back plate, and secure it by the clamp.

CAUTION:
Be sure the lining surface is free from brake fluid and grease.
2) Apply brake grease to the following locations.

Brake grease:
Brake Grease (Part No. 003602002)
- Six contact surfaces of the brake shoe rim and back plate gasket
- Contact surface of the brake shoe and the anchor pin
- Contact surface of the parking brake lever and strut
- Contact surface of the brake shoe and the adjuster
- Contact surface of the brake shoe and strut
- Contact surface of lever and brake shoe

3) Install the wave washer and lever to the secondary side brake shoe pin, and lock the retainer securely.
4) Install the parking brake cable to the lever.
5) Install the adjuster and adjusting spring to the brake shoe.

NOTE:
Install the adjuster with screw section in the direction shown below.

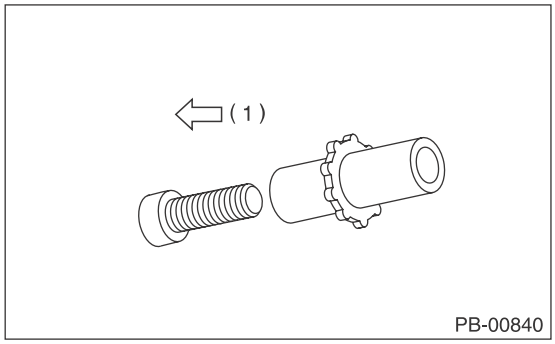

(1) For left wheels, facing the front side of vehicle, for right wheels, facing the rear side of vehicle

6) Check that the parking brake cable does not fall from the cable guide.
7) Install the brake shoes to the back plate with shoe hold pins, brake shoe springs, and brake shoe cups.
8) Install the strut and strut spring to the brake shoes.

NOTE:
Install the strut spring to face the upper side of the vehicle.
9) Install the return springs; first the primary side then the secondary side.
10) Install the brake disc rotor and the brake caliper.
11) Install the brake hose bracket.

Tightening torque:
<Ref. to BR-4, COMPONENT, General Description.>
12) Adjust the parking brake. <Ref. to PB-8, ADJUSTMENT, Parking Brake Assembly (Rear Disc Brake).>
13) When replacing with the new brake shoe, connect the Subaru Select Monitor and perform the “Break-in Parking Brake Drive Mode”. <Ref. to PB(diag)-18, BREAK-IN PARKING BRAKE DRIVE MODE, OPERATION, Subaru Select Monitor.>

14) After breaking-in, re-adjust the parking brakes. <Ref. to PB-8, ADJUSTMENT, Parking Brake Assembly (Rear Disc Brake).>

C: INSPECTION

1) Measure the brake disc rotor inside diameter. If the disc is scored or worn, replace the brake disc rotor.

Disc rotor inside diameter:
Standard:
190 mm (7.48 in)
Service limit:
191 mm (7.52 in)

2) Measure the lining thickness. If it exceeds the limit, replace the brake shoe.

Lining thickness:
Standard:
2.8 mm (0.11 in)
Service limit:
1.5 mm (0.059 in)

NOTE:
Replace the right and left brake shoe as a set.

D: ADJUSTMENT

1. SHOE CLEARANCE

1) Lift up the vehicle, and then remove the rear wheels.
2) Remove the adjusting hole cover from the disc rotor.
3) Using a flat tip screwdriver, turn the adjusting screw in the direction of arrow as shown in the figure below until the brake shoe is in close contact with the disc rotor.

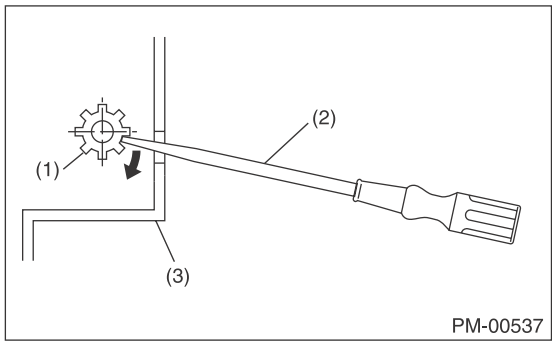

(1) Adjusting screw
(2) Flat tip screwdriver
(3) Disc rotor

4) Turn back the adjusting screw 5 notches to opposite direction of arrow.

CAUTION:
• Operate the parking brake several times to check there is no brake drag.
• If the amount that the adjusting screw is turned back is little, securely turn back 5 notches to avoid dragging.

5) Install the adjusting hole cover to the disc rotor.
6) Install the rear wheels and lower the vehicle.
7) Park the vehicle at a level ground with the four wheels on the ground.
8) Connect the Subaru Select Monitor to perform the “Force Sensor Calibration Mode”. <Ref. to PB(diag)-17, FORCE SENSOR CALIBRATION MODE, OPERATION, Subaru Select Monitor.>

4. Parking Brake Switch

A: REMOVAL

1) Remove the instrument panel lower cover.
2) Remove the screws and remove the parking brake switch.

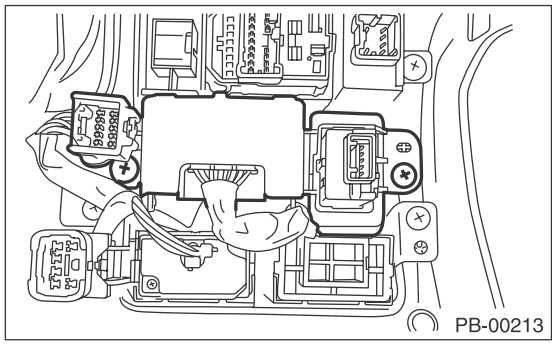

B: INSTALLATION

Install in the reverse order of removal.

C: INSPECTION

1. PARKING BRAKE CONTROL SWITCH

Measure the resistance between parking brake control switch terminals.

Switch position	Terminal No.	Specification
Press	2, 3 and 9	Less than 1 Ω
Neutral	2 and 9 1 and 3	Less than 1 Ω
Pull	1, 2 and 3	Less than 1 Ω

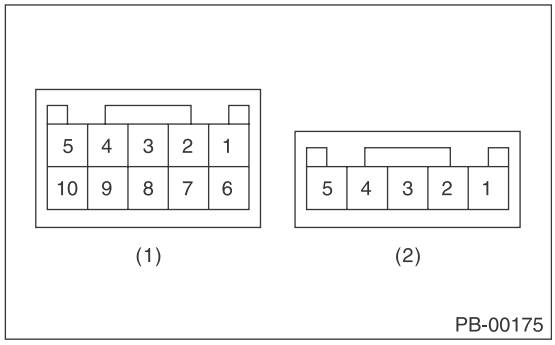

(1) Parking brake control switch
(2) Hill hold switch

NOTE:
If it is not within the specification, replace the switch.

2. HILL HOLD SWITCH

Measure the resistance between hill hold switch terminals.

Switch position	Terminal No.	Specification
ON	1 and 4	Less than 1 Ω
OFF	—	1 MΩ or more

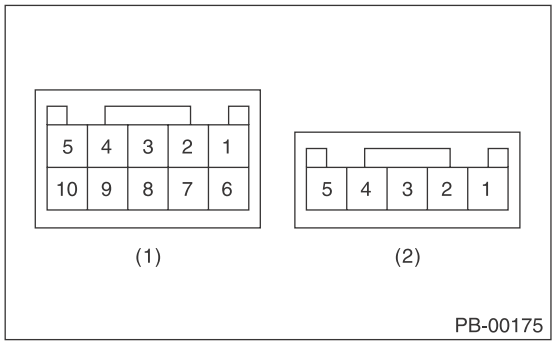

(1) Parking brake control switch
(2) Hill hold switch

NOTE:
If it is not within the specification, replace the switch.

5. Emergency Release of Electronic Parking Brake

A: OPERATION

CAUTION:
• Perform this operation only when the parking brake must be released in emergency situation such as a system malfunction.
• When doing this operation at the slope, the vehicle may move and the unintentional accident may happen. Before operation, be sure to confirm the safety condition of vehicle surrounding.
1) Shift the select lever to “P” range (AT or CVT model), or “1st” or “R” (MT model).
2) Stop the engine.
3) Set the wheel stoppers to tires.
4) Take out the electronic parking brake release tool from the vehicle service tools.
5) Insert the release tool to the parking brake actuator cap, and remove the cap by turning the counterclockwise.

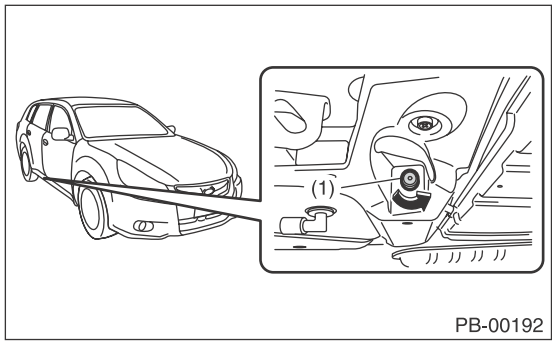

(1) Cap

6) Insert the release tool into the parking brake actuator by breaking through the film, and turn clockwise 200 to 250 times.

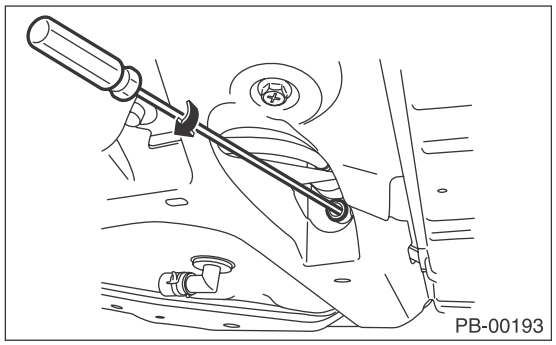

7) Install the cap which was removed in step 5).

Tightening torque:
3 N·m (0.3 kgf-m, 2.2 ft-lb)

8) When the emergency release of electronic parking brake was performed, be sure to perform the inspection of the Emergency Release of Electronic Parking Brake, regardless of the vehicle drive/no-drive. <Ref. to PB-10, INSPECTION, Emergency Release of Electronic Parking Brake.>

B: INSPECTION

When the emergency release of electronic parking brake was performed, check the following items, regardless of the vehicle drive/no-drive.
• Parking brake actuator operates or not, when parking brake switch is operated.

NOTE:
When returning from the emergency release condition, operation time takes for 10-odd seconds because the actuator strokes fully.
• Brake warning light illuminates or not, when parking brake is operated. <Ref. to PB(diag)-25, Warning Light Illumination Pattern.>
• Noise occurs or not, when parking brake is operated.
• Visual inspection of parking brake shoe. <Ref. to PB-6, Parking Brake Assembly (Rear Disc Brake).>
• Drag occurs or not, when parking brake is released. <Ref. to PB-8, ADJUSTMENT, Parking Brake Assembly (Rear Disc Brake).>

6. General Diagnostic Table

A: INSPECTION

Symptoms	Possible cause	Corrective action
Brake drag	Parking brake actuator is faulty.	Replace.
	Parking brake cable does not move.	Replace.
	Parking brake shoe clearance is maladjusted.	Adjust.
	Return spring is faulty.	Replace.
Noise from brake	Return spring is faulty.	Replace.
	Shoe hold-down spring faulty.	Replace.

PARKING BRAKE (DIAGNOSTICS)

PB(diag)

		Page
1.	Basic Diagnostic Procedure	2
2.	Check List for Interview	4
3.	General Description	8
4.	Electrical Component Location	10
5.	Control Module I/O Signal	12
6.	Subaru Select Monitor	14
7.	Read Diagnostic Trouble Code (DTC)	22
8.	Inspection Mode	23
9.	Clear Memory Mode	24
10.	Warning Light Illumination Pattern	25
11.	List of Diagnostic Trouble Code (DTC)	34
12.	Diagnostic Procedure with Diagnostic Trouble Code (DTC)	36
13.	General Diagnostic Table	65

1. Basic Diagnostic Procedure

A: PROCEDURE

CAUTION:
When removing or installing, remove all foreign matter (dust, water, and oil) from the parking brake control module connectors.

NOTE:
- To check the harness for open or short circuits, shake problem spot or connector.
- Refer to “Check List for Interview”. <Ref. to PB(diag)-4, Check List for Interview.>

	Step	Check	Yes	No
1	**CHECK PRE-INSPECTION.** 1) Ask the customer when and how the trouble occurred using the interview check list. <Ref. to PB(diag)-4, Check List for Interview.> 2) Before performing diagnosis, check the component which might affect parking brake system problems. <Ref. to PB(diag)-8, INSPECTION, General Description.>	Is the component that might influence the parking brake system problem normal?	Go to step **2**.	Repair or replace each component.
2	**CHECK INDICATION OF DTC.** 1) Turn the ignition switch to OFF. 2) Connect the Subaru Select Monitor to data link connector. 3) Turn the ignition switch to ON and run the Subaru Select Monitor. 4) Read the DTC using the Subaru Select Monitor. <Ref. to PB(diag)-22, OPERATION, Read Diagnostic Trouble Code (DTC).> NOTE: If the communication function of the Subaru Select Monitor cannot be executed properly, check the communication circuit. <Ref. to PB(diag)-20, COMMUNICATION FOR INITIALIZING IMPOSSIBLE, INSPECTION, Subaru Select Monitor.>	Is DTC displayed on Subaru Select Monitor?	Record the DTC. Go to step **4**.	Go to step **3**.
3	**PERFORM GENERAL DIAGNOSTICS.** 1) Perform the inspection by referring to “General Diagnostic Table”. <Ref. to PB(diag)-65, General Diagnostic Table.> 2) Perform the Clear Memory Mode. <Ref. to PB(diag)-24, OPERATION, Clear Memory Mode.> 3) Perform the Inspection Mode. <Ref. to PB(diag)-23, PROCEDURE, Inspection Mode.> 4) Read the DTC. <Ref. to PB(diag)-22, OPERATION, Read Diagnostic Trouble Code (DTC).> 5) Check the DTC is not displayed.	After starting the engine, do the electronic parking brake warning light (C6 model only), hill hold indicator light and brake warning light go off with the parking brake released?	Finish the diagnosis.	Check the combination meter circuit. <Ref. to PB(diag)-29, ELECTRONIC PARKING BRAKE WARNING LIGHT AND HILL HOLD INDICATOR LIGHT DO NOT GO OFF, Warning Light Illumination Pattern.> <Ref. to PB(diag)-30, BRAKE WARNING LIGHT DOES NOT GO OFF, Warning Light Illumination Pattern.>
4	**CHECK INFORMATION STORED IN FREEZE FRAME DATA.** Using the Subaru Select Monitor, check the freeze frame data for the parking brake control module.	Are freeze frame data recorded?	Record the freeze frame data. Go to step **5**.	Go to step **5**.

	Step	Check	Yes	No
5	**PERFORM DIAGNOSIS.** 1) Refer to “List of Diagnostic Trouble Code (DTC)”. NOTE: For the DTC list, refer to “List of Diagnostic Trouble Code (DTC)”. <Ref. to PB(diag)-34, LIST, List of Diagnostic Trouble Code (DTC).> 2) Correct the cause of trouble. 3) Perform the Clear Memory Mode. <Ref. to PB(diag)-24, OPERATION, Clear Memory Mode.> 4) Perform the Inspection Mode. <Ref. to PB(diag)-23, PROCEDURE, Inspection Mode.> 5) Read the DTC. <Ref. to PB(diag)-22, OPERATION, Read Diagnostic Trouble Code (DTC).>	Is DTC displayed?	Repeat step 5 until DTC is not shown.	Finish the diagnosis.

2. Check List for Interview

A: CHECK

Check the following item about the vehicle's state.

1. STATE OF BRAKE WARNING LIGHT

Brake warning light illuminates/goes off/ blinks.	❑ Always ❑ Sometimes ❑ Only once ❑ Does not illuminate ❑ Does not go off ❑ Blinks • When/How long does illuminate/go off/blink?		
Ignition key position	❑ LOCK ❑ ACC ❑ ON (Before starting engine) ❑ START ❑ ON (After starting engine, engine is running) ❑ ON (After starting engine, engine is at a standstill)		
Timing	❑ Immediately after turning the ignition switch to ON ❑ Immediately after turning the ignition switch to START ❑ When the parking brake switch is pressed ❑ When the parking brake switch is pulled ❑ When the parking brake switch is pressed continually (times) ❑ When the parking brake switch is pulled continually (times)		
	❑ When accelerating	—	km/h
		—	MPH
	❑ While driving at a constant speed	km/h	MPH
	❑ While decelerating	—	km/h
		—	MPH
	❑ When turning to the right	Steering angle:	deg
		Steering time:	Sec.
	❑ When turning to the left	Steering angle:	deg
		Steering time:	Sec.
	❑ When operating other electrical parts		
	• Part name: • Operating condition:		

2. STATE OF ELECTRONIC PARKING BRAKE WARNING LIGHT (C6 MODEL ONLY)

<table>
<tr><td>Electronic parking brake warning light illuminates.</td><td colspan="3">❑ Always
❑ Sometimes
❑ Only once
❑ Does not illuminate
• When/How long does it illuminate?</td></tr>
<tr><td>Ignition key position</td><td colspan="3">❑ LOCK
❑ ACC
❑ ON (Before starting engine)
❑ START
❑ ON (After starting engine, engine is running)
❑ ON (After starting engine, engine is at a standstill)</td></tr>
<tr><td rowspan="11">Timing</td><td colspan="3">❑ Immediately after turning the ignition switch to ON
❑ Immediately after turning the ignition switch to START
❑ When the parking brake switch is pressed
❑ When the parking brake switch is pulled
❑ When the parking brake switch is pressed continually (times)
❑ When the parking brake switch is pulled continually (times)</td></tr>
<tr><td rowspan="2">❑ When accelerating</td><td colspan="2">— km/h</td></tr>
<tr><td colspan="2">— MPH</td></tr>
<tr><td>❑ While driving at a constant speed</td><td>km/h</td><td>MPH</td></tr>
<tr><td rowspan="2">❑ While decelerating</td><td colspan="2">— km/h</td></tr>
<tr><td colspan="2">— MPH</td></tr>
<tr><td rowspan="2">❑ When turning to the right</td><td>Steering angle:</td><td>deg</td></tr>
<tr><td>Steering time:</td><td>Sec.</td></tr>
<tr><td rowspan="2">❑ When turning to the left</td><td>Steering angle:</td><td>deg</td></tr>
<tr><td>Steering time:</td><td>Sec.</td></tr>
<tr><td colspan="3">❑ When operating other electrical parts</td></tr>
<tr><td colspan="3">• Part name:
• Operating condition:</td></tr>
</table>

3. HILL HOLD INDICATOR LIGHT CONDITION

<table>
<tr><td>Hill hold indicator light illuminates.</td><td colspan="3">❑ Always
❑ Sometimes
❑ Only once
❑ Does not illuminate
• When/How long does it illuminate?</td></tr>
<tr><td>Ignition key position</td><td colspan="3">❑ LOCK
❑ ACC
❑ ON (Before starting engine)
❑ START
❑ ON (After starting engine, engine is running)
❑ ON (After starting engine, engine is at a standstill)</td></tr>
<tr><td rowspan="12">Timing</td><td colspan="3">❑ Immediately after turning the ignition switch to ON
❑ Immediately after turning the ignition switch to START
❑ When the hill hold switch is pressed (seconds)
❑ When the parking brake switch is pressed
❑ When the parking brake switch is pulled
❑ When the parking brake switch is pressed continually (times)
❑ When the parking brake switch is pulled continually (times)</td></tr>
<tr><td rowspan="2">❑ When accelerating</td><td>—</td><td>km/h</td></tr>
<tr><td>—</td><td>MPH</td></tr>
<tr><td>❑ While driving at a constant speed</td><td>km/h</td><td>MPH</td></tr>
<tr><td rowspan="2">❑ While decelerating</td><td>—</td><td>km/h</td></tr>
<tr><td>—</td><td>MPH</td></tr>
<tr><td rowspan="2">❑ When turning to the right</td><td>Steering angle:</td><td>deg</td></tr>
<tr><td>Steering time:</td><td>Sec.</td></tr>
<tr><td rowspan="2">❑ When turning to the left</td><td>Steering angle:</td><td>deg</td></tr>
<tr><td>Steering time:</td><td>Sec.</td></tr>
<tr><td colspan="3">❑ When operating other electrical parts</td></tr>
<tr><td colspan="3">• Part name:
• Operating condition:</td></tr>
</table>

4. CONDITIONS UNDER WHICH TROUBLE OCCURS

Environment	a) Weather	❑ Fine ❑ Cloudy ❑ Rainy ❑ Snowy ❑ Others:
	b) Ambient temperature	°C (°F)
	c) Road	❑ Inner city ❑ Suburbs ❑ Highway ❑ Local street ❑ Uphill ❑ Downhill ❑ Paved road ❑ Gravel road ❑ Muddy road ❑ Sandy place ❑ Straight road ❑ Sharp curve ❑ Gentle curve ❑ S-curve ❑ Road with a slope on both sides ❑ Others:
	d) Road surface	❑ Dry ❑ Wet ❑ Covered with fresh snow ❑ Covered with hardened snow ❑ Frozen slope ❑ Others:
Condition	a) Tire inflation pressure	Front RH tire: kPa
		Front LH tire: kPa
		Rear RH tire: kPa
		Rear LH tire: kPa
	b) Degree of wear	Front RH tire: mm (in)
		Front LH tire: mm (in)
		Rear RH tire: mm (in)
		Rear LH tire: mm (in)
	c) Tire/Wheel size	❑ Specified size ❑ Except specification ( )
	d) Tire variation	❑ Summer tire ❑ Studless tire (Brand:)
	e) Tire chain is attached: ❑ Yes / ❑ No	
	f) Using T-type tires: ❑ Yes / ❑ No	
	g) Condition of suspension alignment:	
	h) Loaded condition:	
	i) Repaired parts are used: ❑ Yes / ❑ No	
	• Content:	
	j) Others:	

3. General Description

A: CAUTION

1. SUPPLEMENTAL RESTRAINT SYSTEM "AIRBAG"

Airbag system wiring harness is routed near the parking brake switch, hill hold switch and parking brake control module.

CAUTION:
• Do not use electrical test equipment on the airbag system circuits.
• Be careful not to damage the airbag system wiring harness, when servicing the parking brake switch, hill hold switch and parking brake control module.

B: INSPECTION

Before performing diagnosis, inspect the following items which may influence parking brake system problems.

1. BATTERY

Measure the battery voltage and specific gravity of the electrolyte.

Standard voltage:
12 V or more

Specific gravity:
1.260 or more

2. GROUND

Check the tightening torque of ground (GB-9 and 10) bolts of the parking brake system.

Tightening torque:
13 N·m (1.3 kgf-m, 9.6 ft-lb)

3. BRAKE DRAG

Check for brake drag.

4. PARKING BRAKE ASSEMBLY

Check and adjust the parking brake assembly.
• Check the disc rotor inner diameter and lining thickness. <Ref. to PB-8, INSPECTION, Parking Brake Assembly (Rear Disc Brake).>
• Adjust the shoe clearance. <Ref. to PB-8, ADJUSTMENT, Parking Brake Assembly (Rear Disc Brake).>

5. TIRE

Check the tire specifications, tire wear and air pressure. <Ref. to WT-2, SPECIFICATION, General Description.>

C: PREPARATION TOOL

1. SPECIAL TOOL

ILLUSTRATION	TOOL NUMBER	DESCRIPTION	REMARKS
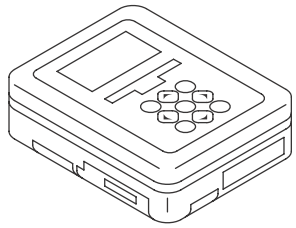 ST1B022XU0	1B022XU0	SUBARU SELECT MONITOR III KIT	Used for troubleshooting the electrical system.

2. GENERAL TOOL

TOOL NAME	REMARKS
Circuit tester	Used for measuring resistance, voltage and current.

4. Electrical Component Location

A: LOCATION

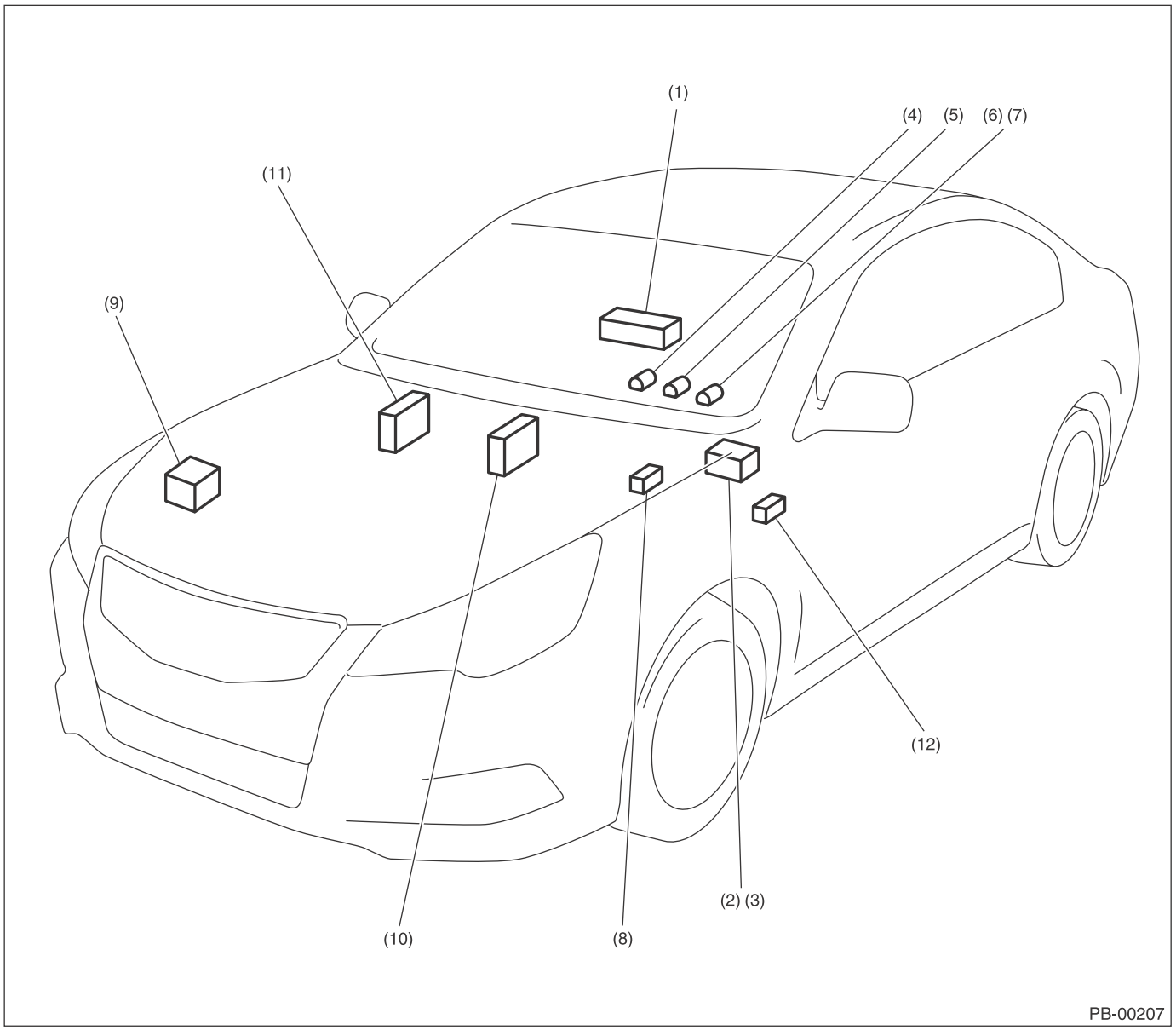

(1)	Parking brake control module	(5)	Electronic parking brake warning light (C6 model only)	(9)	VDC control module & hydraulic control unit (VDCCM&H/U)
(2)	Parking brake switch	(6)	Brake warning light (C0, C5 and C6 models)	(10)	Body integrated unit
(3)	Hill hold switch	(7)	Brake warning light (U4, U5 and U6 models)	(11)	Engine control module (ECM)
(4)	Hill hold indicator light	(8)	Clutch stroke sensor (MT model only)	(12)	Data link connector

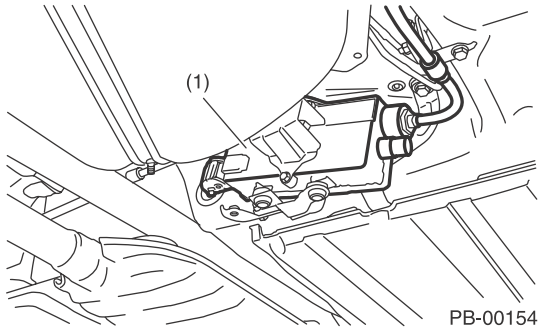

PB-00154

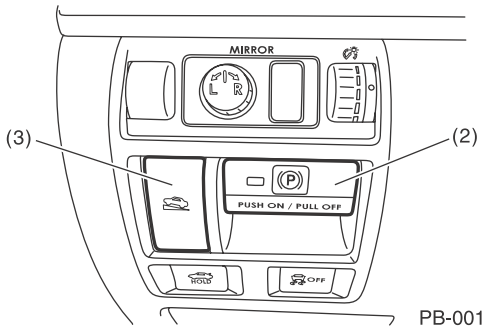

PB-00177

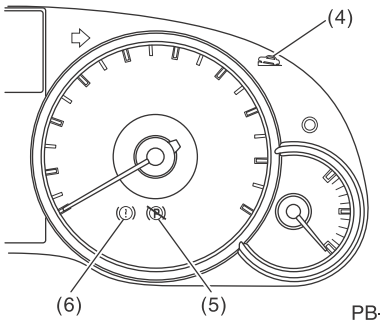

PB-00156

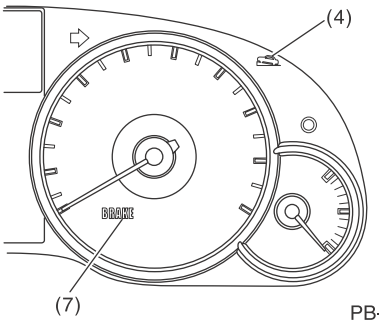

PB-00210

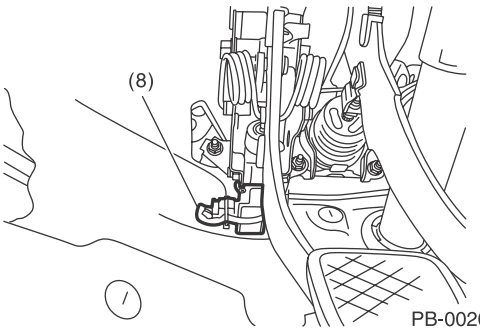

PB-00208

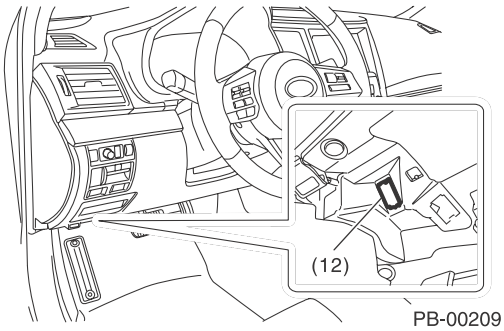

PB-00209

5. Control Module I/O Signal

A: ELECTRICAL SPECIFICATION

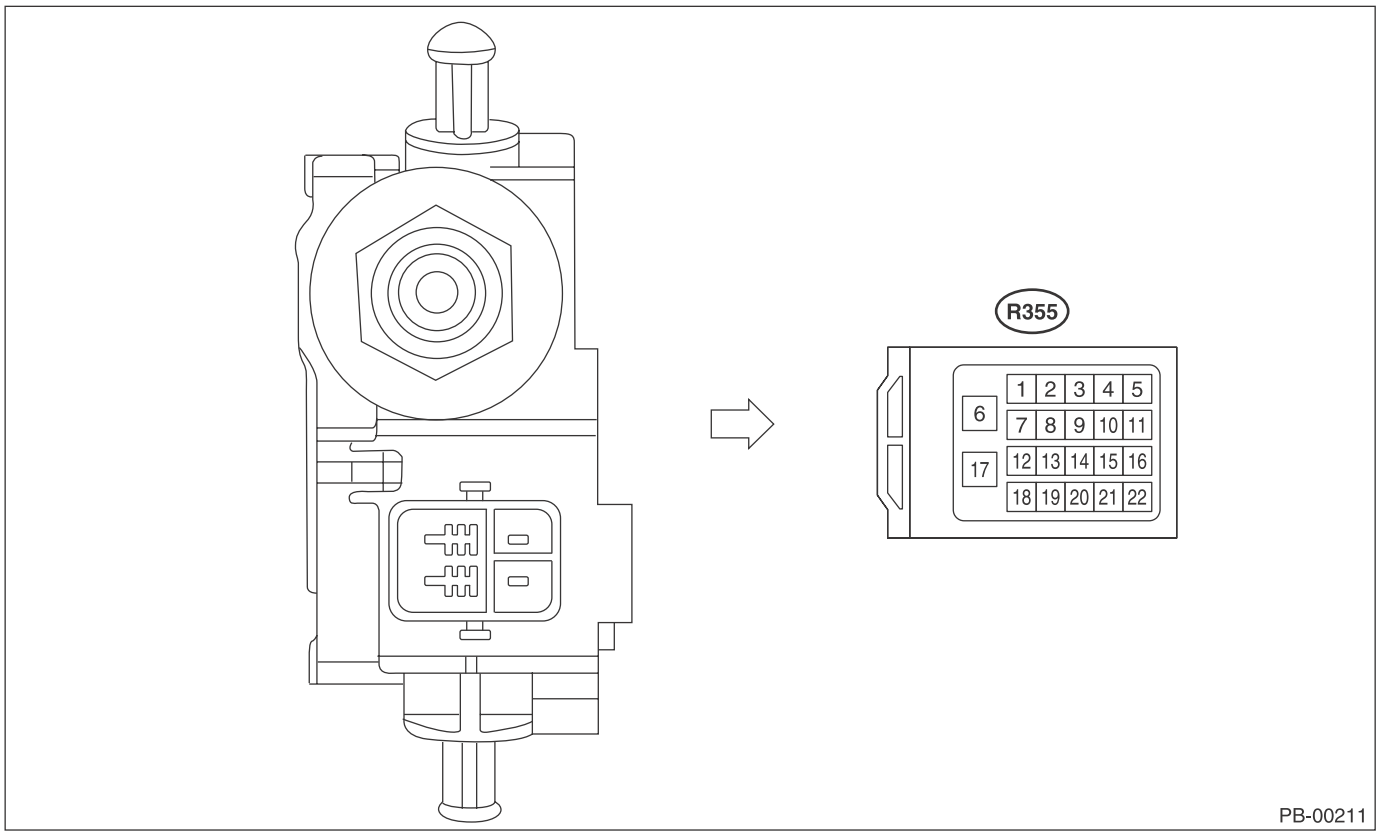

NOTE:
The terminal numbers of the parking brake control module connectors are as indicated in the figure.

Content	Terminal No. (+) — (–)	Input/Output signal
		Measured value and measuring conditions
Battery power supply	17 — 6	Always 10 — 15 V
IGN power supply	18 — 6	10 — 15 V when the ignition switch is ON.
Parking brake switch	13	Pulse signal
Parking brake switch	14	Pulse signal
Parking brake switch	20	Pulse signal
Parking brake switch	19	Pulse signal
Hill hold switch	2 — 6	When hill hold switch is operated, 10 — 15 V
Parking brake switch indicator light	7 — 6	When the light is on: 0 V, when the light is off: 10 — 15 V
Clutch stroke sensor (MT model only)	12	Pulse signal
CAN-H	9	Serial communication
CAN-L	3	Serial communication
Ground	6	—

B: WIRING DIAGRAM

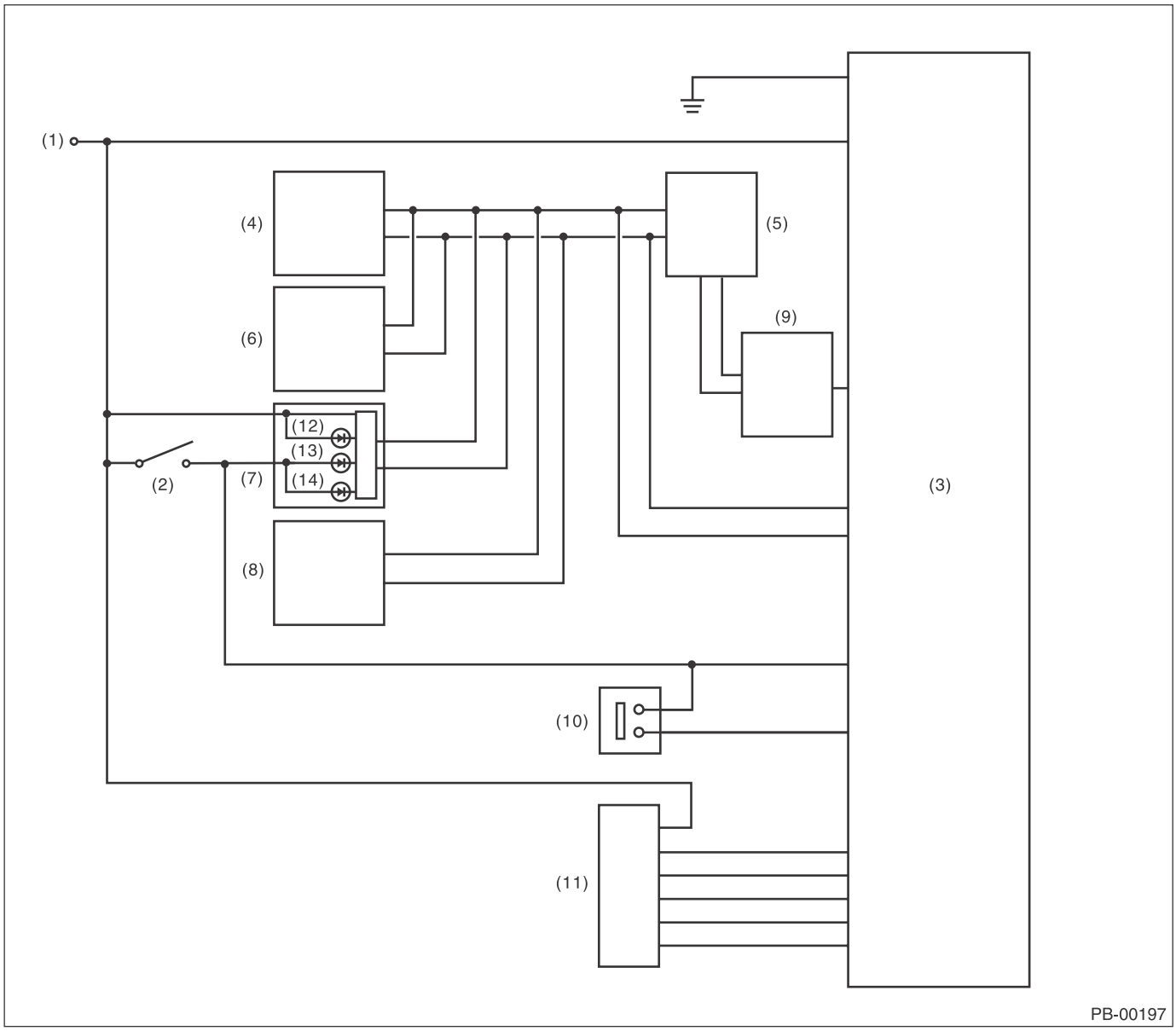

(1)	Battery	(6)	Transmission control module	(11)	Parking brake switch
(2)	Ignition switch	(7)	Combination meter	(12)	Hill hold indicator light
(3)	Electronic parking brake CM	(8)	Body integrated unit	(13)	Electronic parking brake warning light (C6 model only)
(4)	Engine control module (ECM)	(9)	Clutch stroke sensor (MT model only)	(14)	Brake warning light
(5)	VDC control module	(10)	Hill hold switch		

6. Subaru Select Monitor

A: OPERATION

1. HOW TO USE SUBARU SELECT MONITOR

NOTE:
• For detailed operation procedures, refer to “PC application help for Subaru Select Monitor”.
• If communication is not possible between the parking brake control module and the Subaru Select Monitor, check the communication circuit. <Ref. to PB(diag)-20, COMMUNICATION FOR INITIALIZING IMPOSSIBLE, INSPECTION, Subaru Select Monitor.>

2. READ CURRENT DATA

NOTE:
- For detailed operation procedures, refer to “PC application help for Subaru Select Monitor”.
- A list of the support data is shown in the following table.

Display	Contents to be displayed	Unit
FR Wheel Speed	Wheel speed detected by front ABS wheel speed sensor RH is displayed.	km/h or MPH
FL Wheel Speed	Wheel speed detected by front ABS wheel speed sensor LH is displayed.	km/h or MPH
RR Wheel Speed	Wheel speed detected by rear ABS wheel speed sensor RH is displayed.	km/h or MPH
RL Wheel Speed	Wheel speed detected by rear ABS wheel speed sensor LH is displayed.	km/h or MPH
Power Supply Voltage	The voltage supplied to the parking brake control module is displayed.	V
Engine Speed	Engine speed is displayed.	rpm
Accel. Opening Angle	Acceleration opening is displayed.	%
Reverse Signal	Input condition of reverse signal is displayed. (When reverse: ON)	ON or OFF
Force Sensor	The tension detected by the force sensor in the actuator is displayed.	N
Stroke Sensor	The parking brake cable stroke amount detected by the stroke sensor in the actuator is displayed.	mm
Clutch stroke sensor	The pedal stroke amount detected by the clutch stroke sensor is displayed.	%
Clutch engagement point	Clutch engagement position is displayed.	%
Actuator Inner Temperature(Primary)	Actuator inner temperature (PRY) is displayed.	°C
Actuator Inner Temperature(Secondary)	Actuator inner temperature (SEC) is displayed.	°C
Incline	Incline of the vehicle is displayed.	%
Total Operation Number	Total number of parking brake operation is displayed.	time
Hill Hold Operation Number	Operation number of hill hold function at uphill parking is displayed.	time
Auto Operation Number	“0” is always displayed.	time
Auto Cancel Number	Operation number of automatic accelerator interlock cancel function at starting is displayed.	time
Parking Operation Number when driving	Total number of parking brake operation while driving is displayed.	time
Engine Torque	Engine torque is displayed. (According to ECM specification, engine torque value may be displayed while engine stops.)	N·m
Manual Parking Operation	Parking brake operation condition is displayed. (At manual parking operation: 1)	1 or 0
Auto Parking Operation	Parking brake operation condition is displayed. (At automatic parking operation: 1)	1 or 0
Parking Operation when driving	Parking brake operation condition is displayed. (At parking operation when driving: 1)	1 or 0
Parking Cancel	Parking brake operation condition is displayed. (At parking cancel: 1)	1 or 0
Hill hold lamp	Hill hold indicator control condition is displayed. (When illuminating: ON)	ON or OFF
Ignition Signal	Input condition of ignition signal is displayed.	ON or OFF
Brake Warning Light	Brake warning light control condition is displayed. (When illuminating: ON)	ON or OFF

Display	Contents to be displayed	Unit
Parking System Warning Light	For C6 model, electronic parking brake warning light control condition is displayed. (When illuminating: ON) For other than C6 model, brake warning light control condition is displayed. (When blinking: ON)	ON or OFF
Neutral Signal	Input condition of neutral signal is displayed. (When neutral: ON)	ON or OFF
Brake Switch	Input condition of brake pedal signal is displayed. (When depressed: ON)	ON or OFF
Engine idle flag	Engine speed condition is displayed. (When idling: ON)	ON or OFF
Door Signal	Input condition of door (four locations) open/close signal is displayed. (When at least one door is open: OPEN)	OPEN or CLOSE
Driver Seat Belt Signal	Input condition of driver's seatbelt signal is displayed.	Not in use/In use

3. MAINTENANCE OPERATION MODE

Display	Contents of display	Index No.
Force Sensor Calibration Mode	Perform the force sensor calibration.	<Ref. to PB(diag)-17, FORCE SENSOR CALIBRATION MODE, OPERATION, Subaru Select Monitor.>
Break-in Parking Brake Drive Mode	Perform the break-in parking brake drive mode after replacing the parking brake assembly.	<Ref. to PB(diag)-18, BREAK-IN PARKING BRAKE DRIVE MODE, OPERATION, Subaru Select Monitor.>
Parking Brake Removal Mode	Release the cable tension before removing the parking brake cable.	<Ref. to PB(diag)-17, PARKING BRAKE REMOVAL MODE, OPERATION, Subaru Select Monitor.>
Parameter Initialization Mode	Perform the parameter initialization.	<Ref. to PB(diag)-18, PARAMETER INITIALIZATION MODE, OPERATION, Subaru Select Monitor.>
Clutch Sensor Calibration Mode	Perform the clutch sensor calibration.	<Ref. to PB(diag)-19, CLUTCH SENSOR CALIBRATION MODE, OPERATION, Subaru Select Monitor.>
Clutch Engagement Position Setting	Perform the clutch sensor engagement position setting.	<Ref. to PB(diag)-19, CLUTCH ENGAGEMENT POSITION SETTING, OPERATION, Subaru Select Monitor.>

4. FREEZE FRAME DATA

NOTE:
• Data stored at the time of trouble occurrence is shown on display.
• Each time a trouble occurs, the latest information is stored in the Freeze Frame Data in memory.

Display	Contents to be displayed
FR Wheel Speed	Wheel speed detected by front ABS wheel speed sensor RH is displayed.
FL Wheel Speed	Wheel speed detected by front ABS wheel speed sensor LH is displayed.
RR Wheel Speed	Wheel speed detected by rear ABS wheel speed sensor RH is displayed.
RL Wheel Speed	Wheel speed detected by rear ABS wheel speed sensor LH is displayed.
Power Supply Voltage	The voltage supplied to the parking brake control module is displayed.
Engine Speed	Engine speed is displayed.
Accel. Opening Angle	Acceleration opening is displayed.
Reverse Signal	Input condition of reverse signal is displayed. (When reverse: ON)
Brake Switch	Input condition of brake pedal signal is displayed. (When depressed: ON)
Force Sensor	The tension detected by the force sensor in the actuator is displayed.
Stroke Sensor	The parking brake cable stroke amount detected by the stroke sensor in the actuator is displayed.
Clutch stroke sensor	The pedal stroke amount detected by the clutch stroke sensor is displayed.
Clutch engagement point	Clutch engagement position is displayed.
Actuator Inner Temperature (Primary)	Actuator inner temperature (PRY) is displayed.
Actuator Inner Temperature (Secondary)	Actuator inner temperature (SEC) is displayed.
Incline	Incline of the vehicle is displayed.
Engine Torque	Engine torque is displayed.
Manual Parking Operation	Parking brake operation condition is displayed. (At manual parking operation: 1)
Auto Parking Operation	Parking brake operation condition is displayed. (At automatic parking operation: 1)
Parking Operation when driving	Parking brake operation condition is displayed. (At parking operation when driving: 1)
Parking Cancel	Parking brake operation condition is displayed. (At parking cancel: 1)
Hill hold lamp	Hill hold indicator control condition is displayed. (When illuminating: ON)
Ignition Signal	Input condition of ignition signal is displayed.
Neutral Signal	Input condition of neutral signal is displayed. (When neutral: ON)
Engine idle flag	Engine speed condition is displayed. (When idling: ON)
Door Signal	Input condition of door open/close signal is displayed. (When at least one door is open: OPEN)
Driver Seat Belt Signal	Input condition of driver's seatbelt signal is displayed.

5. PARKING BRAKE REMOVAL MODE

CAUTION:
• Subaru Select Monitor is required for the parking brake removal mode.
• Make sure to perform this procedure with the vehicle lifted.
• When this mode is performed by mistake, operate and then release the parking brake.

NOTE:
When disassembling the parking brake, use this function to set the parking brake cable at the release position.
1) Lift up the vehicle.
2) Connect the Subaru Select Monitor.
3) On «Main Menu» display, select {Each System Check}.
4) On «System Selection Menu» display, select {Brake Control System}.
5) Click the [OK] button after {Parking Brake System} is displayed.
6) On «Maintenance Operation Mode» display, select {Parking Brake Removal Mode}.
7) The confirmation screen, "Perform parking brake removal?", is displayed. Click the [YES] button.
8) The message, "Releasing parking cable until removal position.", is displayed on the screen, and the removal mode begins.
9) The message, "Parking cable released until removal position.", is displayed on the screen. Turn the ignition switch to OFF to end the removal mode.

6. FORCE SENSOR CALIBRATION MODE

CAUTION:
• Subaru Select Monitor is required for the Force Sensor Calibration Mode.
• Make sure to perform this procedure with the vehicle parked in a horizontal place and to use wheel chocks.

NOTE:
• When the following work is performed, use this function to perform calibration of force sensor in the parking brake actuator.
– Removing the parking brake assembly

– Replacing the electronic parking brake control module
– Adjusting the shoe clearance

• After replacing the electronic parking brake control module, if the calibration of the force sensor has not yet been performed, the brake warning light will blink and “Force Sensor Line (abnormal)” DTC will be detected.

1) Park the vehicle in a horizontal place using wheel chocks.
2) Connect the Subaru Select Monitor.
3) On «Main Menu» display, select {Each System Check}.
4) On «System Selection Menu» display, select {Brake Control System}.
5) Click the [OK] button after {Parking Brake System} is displayed.
6) On «Maintenance Operation Mode» display, select {Force Sensor Calibration Mode}.
7) The confirmation screen of vehicle parking condition and wheel chocks usage is displayed. Confirm the parking condition and wheel chocks, and click the [YES] button.
8) A message indicating the calibration mode in progress is displayed on the screen, and the Force Sensor Calibration Mode begins.
9) The message, “Force sensor calibration done. Turn Ignition Switch OFF.”, is displayed on the screen. Turn the ignition switch to OFF to end the calibration mode.

7. BREAK-IN PARKING BRAKE DRIVE MODE

CAUTION:
Subaru Select Monitor is required for the “Break-in Parking Brake Drive Mode”.

NOTE:
• When the parking brake shoe is replaced, use this function to perform parking brake lining break-in drive after adjusting the shoe clearance of the parking brake. <Ref. to PB-8, SHOE CLEARANCE, ADJUSTMENT, Parking Brake Assembly (Rear Disc Brake).>
• After performing the “Break-in Parking Brake Drive Mode”, adjust the shoe clearance of the parking brake again, and perform the “Force Sensor Calibration Mode”. <Ref. to PB(diag)-17, FORCE SENSOR CALIBRATION MODE, OPERATION, Subaru Select Monitor.>

1) Connect the Subaru Select Monitor.
2) On «Main Menu» display, select {Each System Check}.
3) On «System Selection Menu» display, select {Brake Control System}.
4) Click the [OK] button after {Parking Brake System} is displayed.
5) On «Maintenance Operation Mode» display, select {Break-in Parking Brake Drive Mode}.
6) The confirmation message, “Perform break-in parking brake drive?”, is displayed on the screen. With the vehicle parked, release the parking brake, and click the [YES] button.
7) Confirm the message indicating the break-in drive mode start on the screen and the blink of the brake warning light, and begin the break-in drive.
8) Drive the vehicle at approximately 35 km/h (22 MPH) or more.
9) C6 model
Drive the vehicle approximately 200 m (0.12 miles) with the parking brake switch pressed, until the brake warning light goes off.
10) Models other than C6 model
Drive the vehicle approximately 200 m (0.12 miles) with the parking brake switch pressed. Release a hand from the parking brake switch once to cancel. Drive the vehicle again with the parking brake switch pressed, and if brake drag is not felt, go to step 11). If brake drag is felt, repeat steps 8) and 10) again.
11) Turn the ignition switch to OFF, and wait for 5 to 10 minutes until the parking brake temperature drops.
12) Repeat steps 2) to 10) again.
13) Turn the ignition switch to OFF to end the break-in drive mode.
14) Adjust the shoe clearance of the parking brake again. <Ref. to PB-8, SHOE CLEARANCE, ADJUSTMENT, Parking Brake Assembly (Rear Disc Brake).>
15) Perform the Force Sensor Calibration Mode. <Ref. to PB(diag)-17, FORCE SENSOR CALIBRATION MODE, OPERATION, Subaru Select Monitor.>

8. PARAMETER INITIALIZATION MODE

CAUTION:
• Subaru Select Monitor is required for the Parameter Initialization Mode.
• This function can be used for replacement parts of the parking brake control module.

NOTE:
• When DTC “Parameter selection error” is detected after replacing the parking brake control module, use this function to perform parameter initialization of the parking brake control module.
• After performing Parameter Initialization Mode, perform the Force Sensor Calibration Mode and Clutch Sensor Calibration Mode. <Ref. to PB(diag)-17, FORCE SENSOR CALIBRATION MODE, OPERATION, Subaru Select Monitor.> <Ref. to PB(diag)-19, CLUTCH SENSOR CALIBRATION MODE, OPERATION, Subaru Select Monitor.>

1) Connect the Subaru Select Monitor.
2) On «Main Menu» display, select {Each System Check}.
3) On «System Selection Menu» display, select {Brake Control System}.
4) Click the [OK] button after {Parking Brake System} is displayed.
5) On «Maintenance Operation Mode» display, select {Parameter Initialization Mode}.
6) The confirmation message, “Perform parameter initialization?”, is displayed on the screen. Following the instructions on the screen, confirm the connections of all control modules, and click the [YES] button.
7) The message, “Parameter initialization in progress---”, is displayed on the screen, and initialization begins.
8) The message, “Parameter initialization done. Turn Ignition Switch OFF.”, is displayed on the screen. Turn the ignition switch to OFF to end the Parameter Initialization Mode.

9. CLUTCH SENSOR CALIBRATION MODE

CAUTION:
Subaru Select Monitor is required for Clutch Sensor Calibration Mode.

NOTE:
• When the following parts are replaced, use this function to perform clutch sensor calibration.
  – Clutch master cylinder assembly
  – Electronic parking brake control module
  – Clutch pedal
• After replacing the parts above, if the calibration of the clutch sensor has not yet been performed, “Clutch Sensor” DTC will be detected. At this time, the electronic parking brake warning light illuminates on C6 model, or the brake warning light blinks on models other than C6 model.
1) Connect the Subaru Select Monitor.
2) On «Main Menu» display, select {Each System Check}.
3) On «System Selection Menu» display, select {Brake Control System}.
4) Click the [OK] button after {Parking Brake System} is displayed.
5) On «Maintenance Operation Mode» display, select {Clutch Sensor Calibration Mode}.
6) The confirmation message, “Perform clutch sensor calibration?”, is displayed on the screen. Following the instructions on the screen, click the [YES] button with the clutch pedal not depressed.
7) The message, “Clutch sensor calibration done. Turn Ignition switch OFF.”, is displayed on the screen. Turn the ignition switch to OFF to end the calibration mode.

10.CLUTCH ENGAGEMENT POSITION SETTING

CAUTION:
Subaru Select Monitor is required for Clutch Engagement Position Setting.

NOTE:
• When the clutch master cylinder assembly is replaced, use this function to set the engagement position for the clutch stroke sensor.
• When the customer requested a change of the accelerator interlocking release timing, use this function to change the engagement position of the clutch stroke sensor in order to change the accelerator interlocking release timing.
• The clutch engagement position can be set between 50 — 80%.
1) Park the vehicle on a safe level surface without obstacles.
2) Start the engine to warm up.
3) Connect the Subaru Select Monitor.
4) On «Main Menu» display, select {Each System Check}.
5) On «System Selection Menu» display, select {Brake Control System}.
6) Click the [OK] button after {Parking Brake System} is displayed.
7) On «Maintenance Operation Mode» display, select {Clutch Engagement Position Setting}.
8) Release the parking brake. Shift the gear to 1st, then slowly release the clutch pedal, and read “Clutch position current value” on the screen when the vehicle starts to move.
9) Enter the reading to “Engagement position input value”, and press the [Execution] button.
10) Turn the ignition switch to OFF to end the clutch engagement position setting.
11) Drive the vehicle, and check the accelerator interlocking release timing.

CAUTION:
If the clutch engagement position is not set correctly, early release or release delay of the parking brake may occur at the accelerator interlocking release. After completing the setting, check the accelerator interlocking timing in a safe place, and confirm that neither early release nor release delay occurs.

NOTE:
• When a smaller value than “Engagement position learning value” is entered in “Engagement position input value”, the parking brake release timing delays.
• When a larger value than “Engagement position learning value” is entered in “Engagement position input value”, the parking brake release timing becomes early.

B: INSPECTION

1. COMMUNICATION FOR INITIALIZING IMPOSSIBLE

DETECTING CONDITION:
Defective harness connector
TROUBLE SYMPTOM:
Communication is impossible between the parking brake control module and Subaru Select Monitor.
WIRING DIAGRAM:

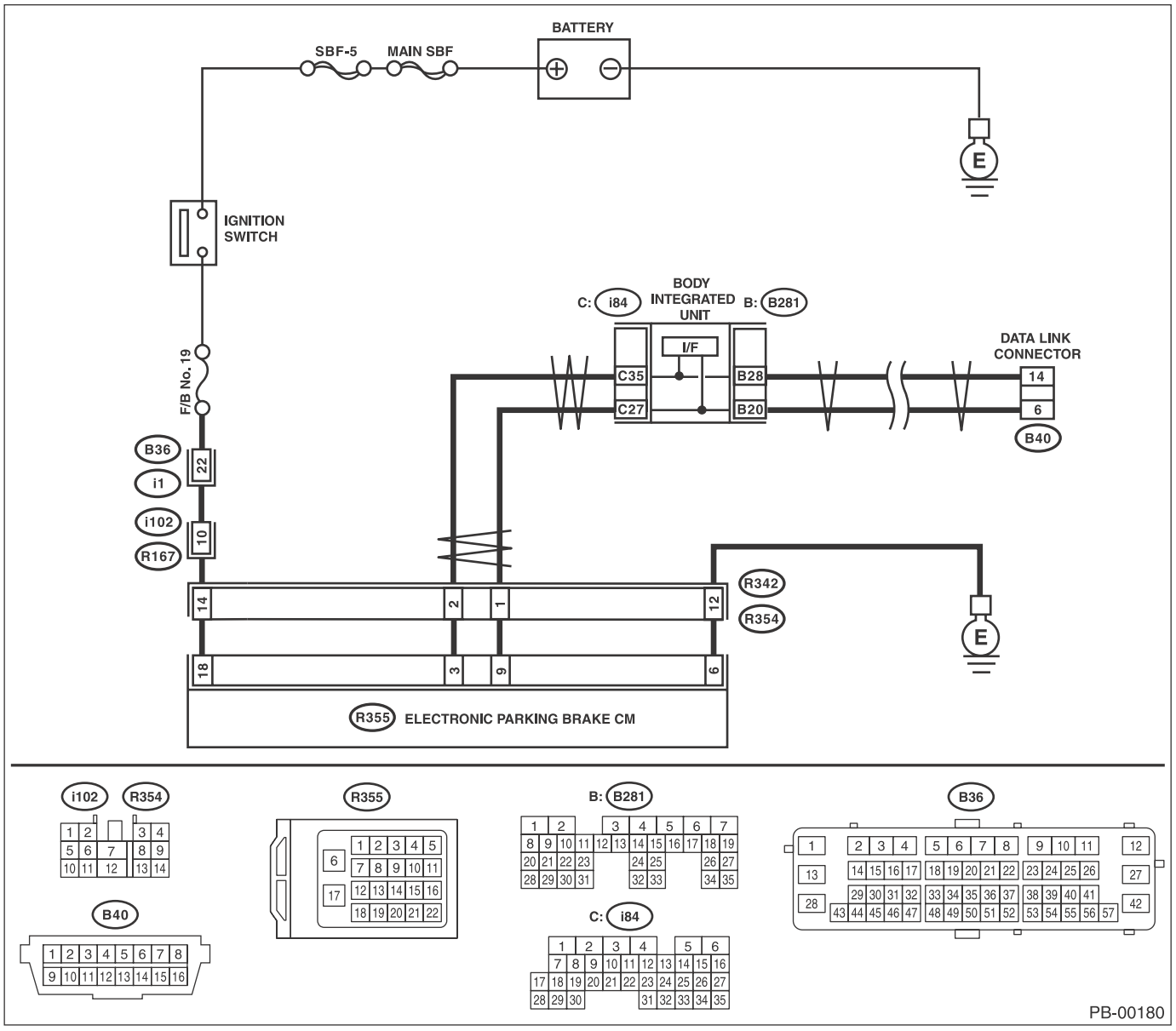

Step		Check	Yes	No
1	**CHECK IGNITION SWITCH.**	Is the ignition switch ON?	Go to step **2**.	Turn the ignition switch to ON, and select {Parking Brake System} using the Subaru Select Monitor.
2	**CHECK BATTERY.** 1) Turn the ignition switch to OFF. 2) Measure the battery voltage.	Is the voltage 11 V or more?	Go to step **3**.	Charge or replace the battery.

	Step	Check	Yes	No
3	**CHECK BATTERY TERMINAL.**	Is there poor contact at battery terminal?	Repair or tighten the battery terminal.	Go to step **4**.
4	**CHECK LAN SYSTEM.** Perform the diagnosis for LAN system. <Ref. to LAN(diag)-10, OPERATION, Read Diagnostic Trouble Code (DTC).>	Is there any fault in LAN system?	Perform the diagnosis according to DTC for LAN system. <Ref. to LAN(diag)-31, List of Diagnostic Trouble Code (DTC).>	Go to step **5**.
5	**CHECK SUBARU SELECT MONITOR COMMUNICATION.** 1) Press the parking brake switch once. 2) Check whether communication with the parking brake system can be executed normally.	Is the system name displayed on Subaru Select Monitor?	Check DTC of the parking brake system. <Ref. to PB(diag)-22, Read Diagnostic Trouble Code (DTC).>	Go to step **6**.
6	**CHECK INSTALLATION OF ELECTRONIC PARKING BRAKE CM CONNECTOR.** Turn the ignition switch to OFF.	Is the electronic parking brake CM connector inserted into the electronic parking brake CM until the clamp locks onto it?	Go to step **7**.	Insert the electronic parking brake CM connector into the electronic parking brake CM.
7	**CHECK HARNESS CONNECTOR BETWEEN ELECTRONIC PARKING BRAKE CM AND CHASSIS GROUND.** Measure the resistance of harness between electronic parking brake CM connector and chassis ground. ***Connector & terminal*** ***(B355) No. 6 — Chassis ground:***	Is the resistance less than 10 Ω?	Go to step **8**.	Repair the open circuit of the electronic parking brake CM ground circuit and poor contact of connector.
8	**CHECK POOR CONTACT OF CONNECTOR.**	Is there poor contact of control module power supply, ground circuit and data link connector?	Repair the connector.	Replace the electronic parking brake CM. <Ref. to PB-5, Parking Brake Actuator.>

7. Read Diagnostic Trouble Code (DTC)

A: OPERATION

NOTE:
• For detailed operation procedures, refer to “PC application help for Subaru Select Monitor”.
• For details concerning DTCs, refer to “List of Diagnostic Trouble Code (DTC)”. <Ref. to PB(diag)-34, List of Diagnostic Trouble Code (DTC).>
• Up to 3 DTCs are displayed in the order of detection.

Display	Contents to be displayed
(Current)	The current DTC is displayed on Subaru Select Monitor display screen.
(Old)	The latest DTC from the history of previous problems is displayed on Subaru Select Monitor display screen.
(Older)	The second latest DTC from the history of previous problems is displayed on the Subaru Select Monitor display screen.
(Before 3)	The third latest DTC from the history of previous problems is displayed on Subaru Select Monitor display screen.

8. Inspection Mode

A: PROCEDURE

1) Start the engine, and operate and release the electronic parking brake a few times with the vehicle at a standstill.
2) Check if the warning light illuminates or blinks, or DTC is displayed.

NOTE:
If the DTC is displayed, perform the diagnosis using “Diagnostic Procedure with Diagnostic Trouble Code (DTC)”. <Ref. to PB(diag)-36, Diagnostic Procedure with Diagnostic Trouble Code (DTC).>
3) Drive the vehicle at least 10 minutes, and operate and release the electronic parking brake a few times.

CAUTION:
Do not drive when the warning light illuminates or blinks.

9. Clear Memory Mode

A: OPERATION

NOTE:
For detailed operation procedures, refer to “PC application help for Subaru Select Monitor”.

10.Warning Light Illumination Pattern

A: INSPECTION

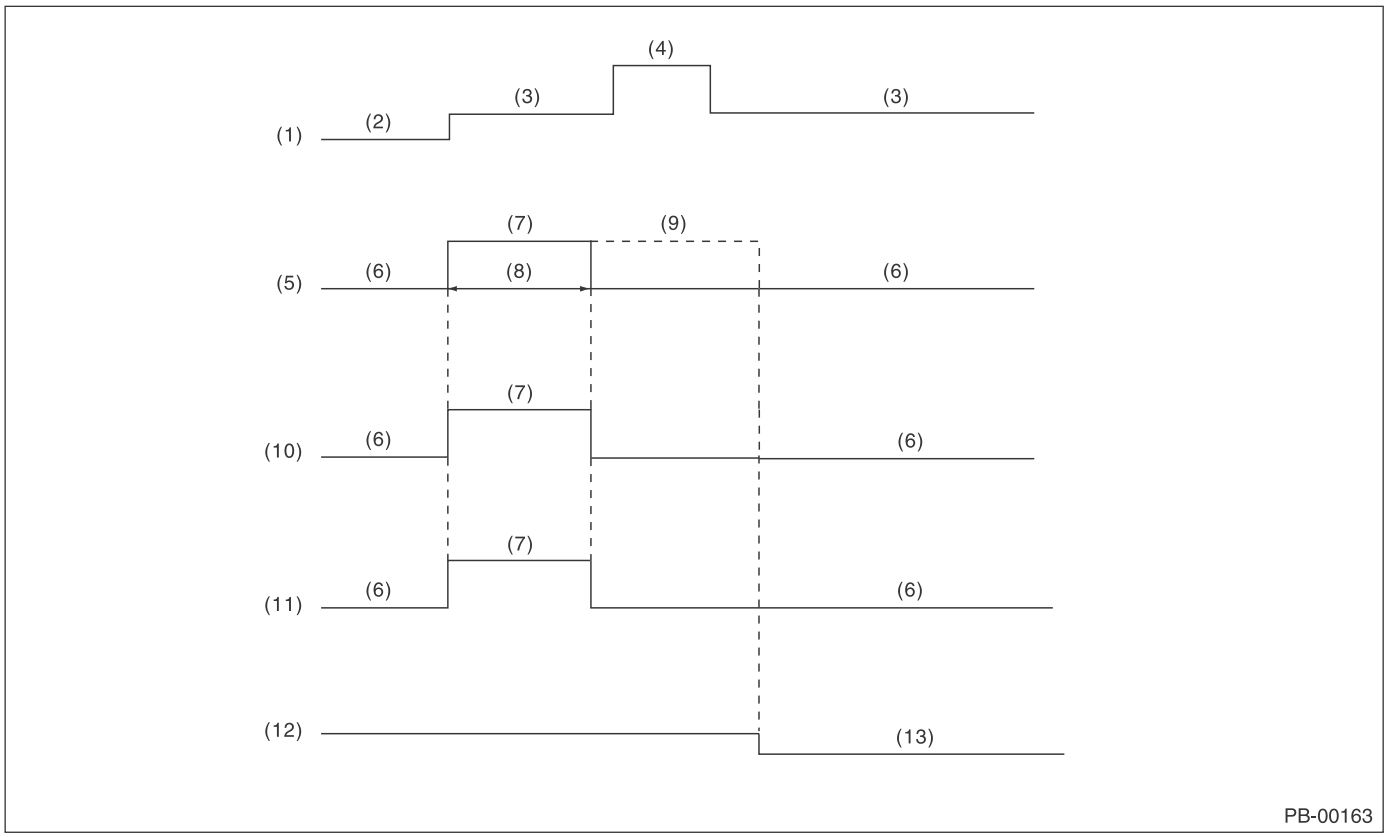

(1) Ignition switch
(2) OFF
(3) ON
(4) Engine start
(5) Brake warning light (EBD warning light)
(6) Light OFF
(7) Light ON
(8) Approx. 2 sec.
(9) If the parking brake is being operated, illumination continues until the brake is released.
(10) Electronic parking brake warning light (C6 model only)
(11) Hill hold indicator light
(12) Parking brake
(13) Released

1) When warning lights or indicator lights do not illuminate in accordance with this illumination pattern, there must be an electrical malfunction.
2) When warning lights or indicator lights remain constantly OFF, check the combination meter circuit or CAN communication circuit. <Ref. to PB(diag)-27, BRAKE WARNING LIGHT, ELECTRONIC PARKING BRAKE WARNING LIGHT AND HILL HOLD INDICATOR LIGHT DO NOT COME ON, Warning Light Illumination Pattern.>
3) When the electronic parking brake warning light (C6 model only) and hill hold indicator light do not go off, check the combination meter circuit, CAN communication circuit and electronic parking brake CM. <Ref. to PB(diag)-29, ELECTRONIC PARKING BRAKE WARNING LIGHT AND HILL HOLD INDICATOR LIGHT DO NOT GO OFF, Warning Light Illumination Pattern.> <Ref. to PB(diag)-28, HILL HOLD INDICATOR LIGHT DO NOT GO OFF, Warning Light Illumination Pattern.>
4) When the brake warning light does not go off, check the combination meter circuit, CAN communication circuit, electronic parking brake CM, and VDCCM&H/U. <Ref. to PB(diag)-30, BRAKE WARNING LIGHT DOES NOT GO OFF, Warning Light Illumination Pattern.> <Ref. to PB(diag)-32, BRAKE WARNING LIGHT REMAINS BLINKING, Warning Light Illumination Pattern.>
5) After replacing the electronic parking brake CM, the brake warning light blinks. Make sure to perform the Force Sensor Calibration Mode and Clutch Sensor Calibration Mode. <Ref. to PB(diag)-17, FORCE SENSOR CALIBRATION MODE, OPERATION, Subaru Select Monitor.> <Ref. to PB(diag)-19, CLUTCH SENSOR CALIBRATION MODE, OPERATION, Subaru Select Monitor.>
6) When operation and release of the parking brake is repeated excessively, the brake warning light blinks and the parking brake switch operation may not be accepted for several tens of seconds; this is not malfunction, however.

B: BRAKE WARNING LIGHT, ELECTRONIC PARKING BRAKE WARNING LIGHT AND HILL HOLD INDICATOR LIGHT DO NOT COME ON

DETECTING CONDITION:

- Defective combination meter
- Defective CAN communication

TROUBLE SYMPTOM:

When the ignition switch is turned to ON (engine OFF), brake warning light, electronic parking brake warning light (C6 model only) and hill hold indicator light do not come on.

	Step	Check	Yes	No
1	**CHECK OTHER INDICATOR LIGHT.** Turn the ignition switch to ON.	Does other indicator light illuminate soon after “ON”?	Go to step **2**.	Perform the diagnosis for combination meter. <Ref. to IDI-6, SELF-DIAGNOSIS DISPLAY MODE, OPERATION, Combination Meter System.>
2	**CHECK LAN SYSTEM.** Check the DTC in LAN system. <Ref. to LAN(diag)-10, OPERATION, Read Diagnostic Trouble Code (DTC).>	Is DTC of LAN system displayed?	Perform the diagnosis according to DTC. <Ref. to LAN(diag)-31, List of Diagnostic Trouble Code (DTC).>	Replace the combination meter case assembly. <Ref. to IDI-20, REMOVAL, Combination Meter.>

C: HILL HOLD INDICATOR LIGHT DO NOT GO OFF

NOTE:
This diagnosis is applied to models other than C6 model.

DETECTING CONDITION:

- Defective combination meter
- Defective CAN communication

TROUBLE SYMPTOM:

When starting the engine, the hill hold indicator light remains lit.

	Step	Check	Yes	No
1	**READ DTC.** Read the DTC. <Ref. to PB(diag)-22, Read Diagnostic Trouble Code (DTC).>	Is DTC displayed?	Perform the diagnosis according to DTC. <Ref. to PB(diag)-34, List of Diagnostic Trouble Code (DTC).>	Go to step **2**.
2	**CHECK LAN SYSTEM.** Check the DTC in LAN system. <Ref. to LAN(diag)-10, OPERATION, Read Diagnostic Trouble Code (DTC).>	Is DTC of LAN system displayed?	Perform the diagnosis according to DTC. <Ref. to LAN(diag)-31, List of Diagnostic Trouble Code (DTC).>	Go to step **3**.
3	**CHECK ELECTRONIC PARKING BRAKE CM.** With the engine started, display the current data of the electronic parking brake CM using Subaru Select Monitor.	When the hill hold switch is not operated after starting the engine, is the “Hill hold lamp” ON?	Replace the electronic parking brake CM. <Ref. to PB-5, Parking Brake Actuator.>	Go to step **4**.
4	**CHECK COMBINATION METER.** Check the combination meter. <Ref. to IDI-6, SELF-DIAGNOSIS DISPLAY MODE, OPERATION, Combination Meter System.>	Is combination meter OK?	Replace the electronic parking brake CM. <Ref. to PB-5, Parking Brake Actuator.>	Replace the combination meter case assembly. <Ref. to IDI-20, REMOVAL, Combination Meter.>

D: ELECTRONIC PARKING BRAKE WARNING LIGHT AND HILL HOLD INDICATOR LIGHT DO NOT GO OFF

NOTE:
This diagnosis is applied to C6 model.

DETECTING CONDITION:

- Defective combination meter
- Defective CAN communication

TROUBLE SYMPTOM:

When starting the engine, the electronic parking brake warning light and hill hold indicator light remain lit.

	Step	Check	Yes	No
1	**READ DTC.** Read the DTC. <Ref. to PB(diag)-22, Read Diagnostic Trouble Code (DTC).>	Is DTC displayed?	Perform the diagnosis according to DTC. <Ref. to PB(diag)-34, List of Diagnostic Trouble Code (DTC).>	Go to step **2**.
2	**CHECK LAN SYSTEM.** Check the DTC in LAN system. <Ref. to LAN(diag)-10, OPERATION, Read Diagnostic Trouble Code (DTC).>	Is DTC of LAN system displayed?	Perform the diagnosis according to DTC. <Ref. to LAN(diag)-31, List of Diagnostic Trouble Code (DTC).>	Go to step **3**.
3	**CHECK ELECTRONIC PARKING BRAKE CM.** With the engine started, display the current data of the electronic parking brake CM using Subaru Select Monitor.	Is “Parking System Warning Light” ON?	Replace the electronic parking brake CM. <Ref. to PB-5, Parking Brake Actuator.>	Go to step **4**.
4	**CHECK ELECTRONIC PARKING BRAKE CM.** With the engine started, display the current data of the electronic parking brake CM using Subaru Select Monitor.	When the hill hold switch is not operated after starting the engine, is the “Hill hold lamp” ON?	Replace the electronic parking brake CM. <Ref. to PB-5, Parking Brake Actuator.>	Go to step **5**.
5	**CHECK COMBINATION METER.** Check the combination meter. <Ref. to IDI-6, SELF-DIAGNOSIS DISPLAY MODE, OPERATION, Combination Meter System.>	Is combination meter OK?	Replace the electronic parking brake CM. <Ref. to PB-5, Parking Brake Actuator.>	Replace the combination meter case assembly. <Ref. to IDI-20, REMOVAL, Combination Meter.>

E: BRAKE WARNING LIGHT DOES NOT GO OFF

DETECTING CONDITION:

- Brake warning light circuit is shorted.
- Defective sensor/connector

TROUBLE SYMPTOM:

After starting the engine, the brake warning light remains lit or blinking though the parking brake is released.

WIRING DIAGRAM:

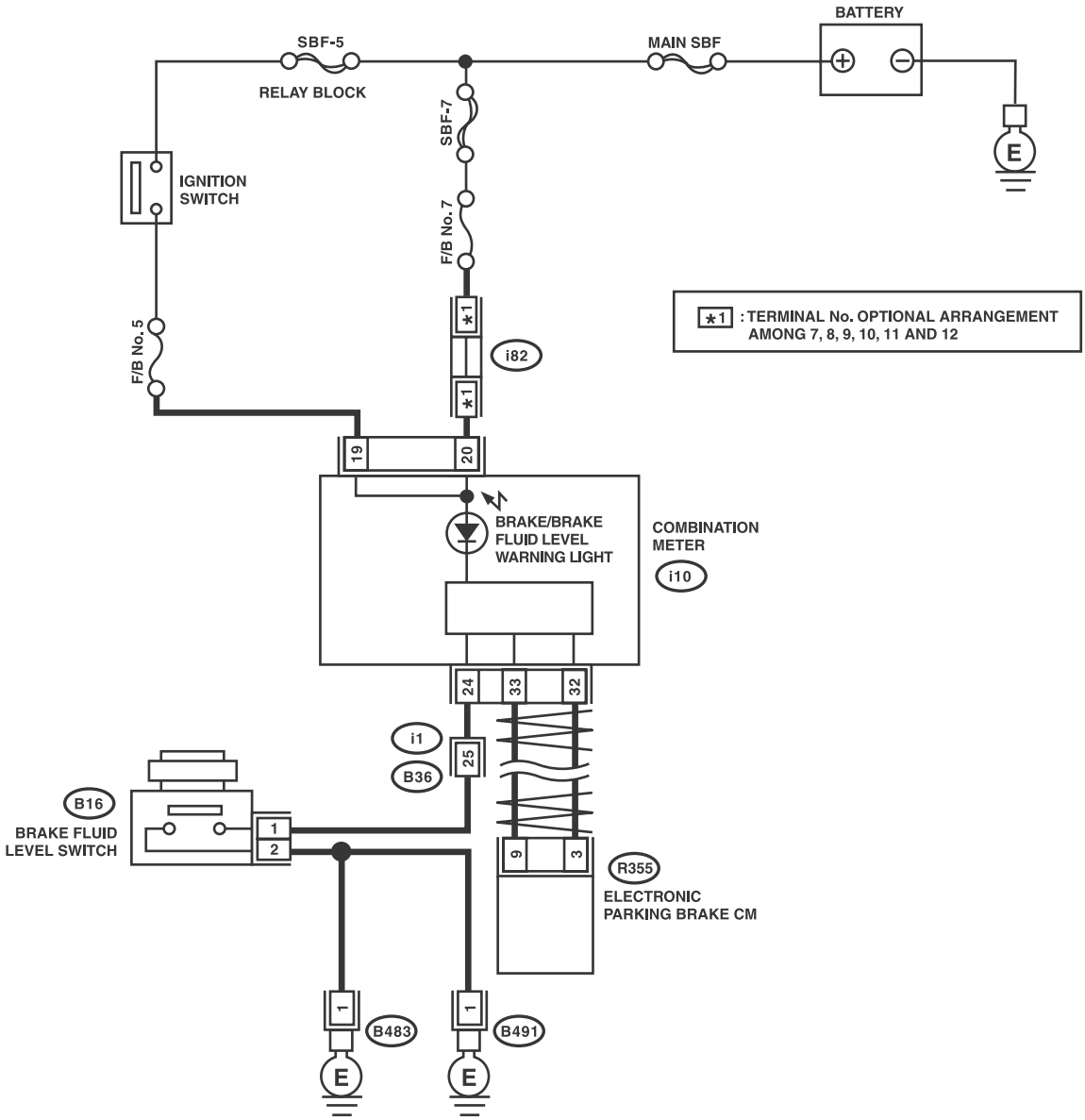

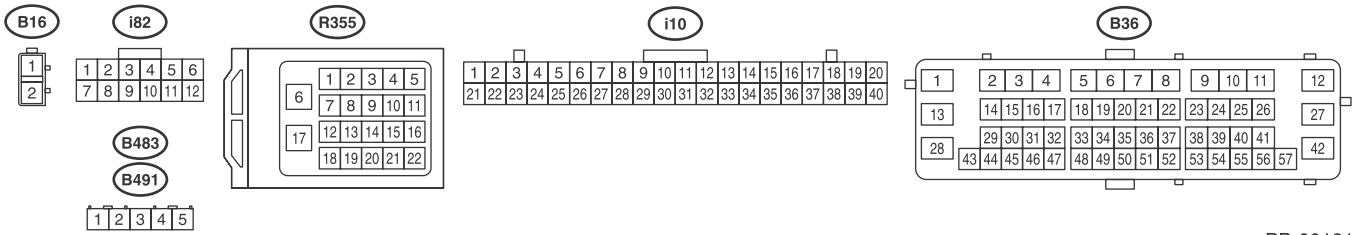

PB-00181

	Step	Check	Yes	No
1	**READ DTC.** Read the DTC. <Ref. to PB(diag)-22, Read Diagnostic Trouble Code (DTC).>	Is DTC displayed?	Perform the diagnosis according to DTC. <Ref. to PB(diag)-34, List of Diagnostic Trouble Code (DTC).>	Go to step **2**.
2	**CHECK BRAKE FLUID AMOUNT.** Check the amount of brake fluid in the reservoir tank of master cylinder.	Is the amount of brake fluid between the lines of “MAX” and “MIN”?	Go to step **3**.	Replenish brake fluid to the specified value.
3	**CHECK BRAKE FLUID LEVEL SWITCH.** 1) Turn the ignition switch to OFF. 2) Disconnect the level switch connector (B16) from master cylinder. 3) Measure the resistance of master cylinder terminals. ***Terminals*** ***No. 1 — No. 2:***	Is the resistance 1 MΩ or more?	Go to step **4**.	Replace the master cylinder. <Ref. to BR-27, Master Cylinder.>
4	**CHECK GROUND SHORT OF HARNESS.** 1) Disconnect the connector (i10) from combination meter. 2) Measure the resistance between combination meter connector and chassis ground. ***Connector & terminal*** ***(i10) No. 24 — Chassis ground:***	Is the resistance 1 MΩ or more?	Go to step **5**.	Repair the harness connector between combination meter and brake fluid level switch.
5	**CHECK LAN SYSTEM.** Check the DTC in LAN system. <Ref. to LAN(diag)-10, OPERATION, Read Diagnostic Trouble Code (DTC).>	Is DTC of LAN system displayed?	Perform the diagnosis according to DTC. <Ref. to LAN(diag)-31, List of Diagnostic Trouble Code (DTC).>	Go to step **6**.
6	**CHECK COMBINATION METER.** Check the combination meter. <Ref. to IDI-6, SELF-DIAGNOSIS DISPLAY MODE, OPERATION, Combination Meter System.>	Is combination meter OK?	Go to step **7**.	Replace the combination meter case assembly. <Ref. to IDI-20, REMOVAL, Combination Meter.>
7	**CHECK VDC SYSTEM.** Check the DTC in VDC system. <Ref. to VDC(diag)-23, OPERATION, Read Diagnostic Trouble Code (DTC).>	Is DTC of VDC system displayed?	Perform the diagnosis according to DTC. <Ref. to VDC(diag)-35, List of Diagnostic Trouble Code (DTC).>	Go to step **8**.
8	**CHECK ELECTRONIC PARKING BRAKE CM.** With the parking brake released, display the current data of the electronic parking brake CM using Subaru Select Monitor.	Is “Brake Warning Light” ON?	Replace the electronic parking brake CM. <Ref. to PB-5, Parking Brake Actuator.>	Go to step **9**.
9	**CHECK OTHER DTC DETECTION.**	Is any other DTC displayed?	Perform the diagnosis according to DTC.	It results from a temporary poor contact interference.

F: BRAKE WARNING LIGHT REMAINS BLINKING

NOTE:
This diagnosis is applied to models other than C6 model.

DETECTING CONDITION:

- Brake warning light circuit is shorted.
- Defective sensor/connector

TROUBLE SYMPTOM:

After starting the engine, the brake warning light remains lit or blinking though the parking brake is released.

WIRING DIAGRAM:

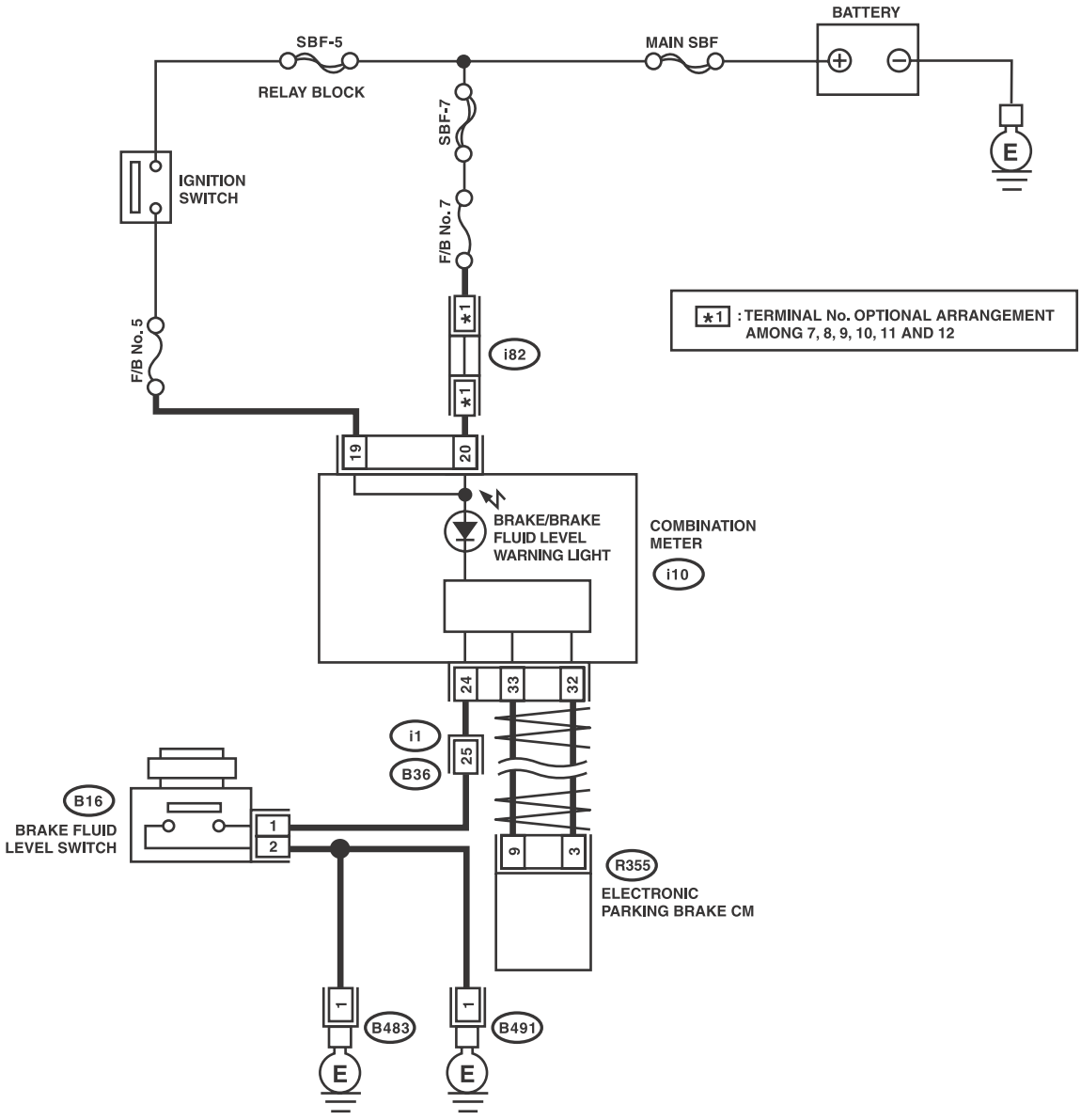

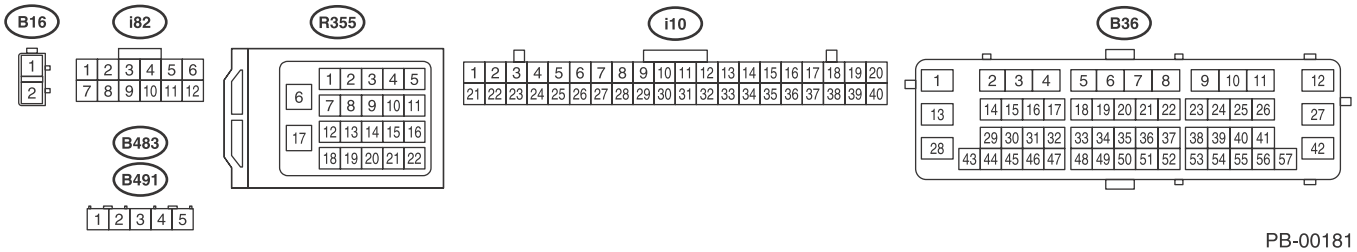

PB-00181

	Step	Check	Yes	No
1	**READ DTC.** Read the DTC. <Ref. to PB(diag)-22, Read Diagnostic Trouble Code (DTC).>	Is DTC displayed?	Perform the diagnosis according to DTC. <Ref. to PB(diag)-34, List of Diagnostic Trouble Code (DTC).>	Go to step **2**.
2	**CHECK BRAKE FLUID AMOUNT.** Check the amount of brake fluid in the reservoir tank of master cylinder.	Is the amount of brake fluid between the lines of "MAX" and "MIN"?	Go to step **3**.	Replenish brake fluid to the specified value.
3	**CHECK BRAKE FLUID LEVEL SWITCH.** 1) Turn the ignition switch to OFF. 2) Disconnect the level switch connector (B16) from master cylinder. 3) Measure the resistance of master cylinder terminals. ***Terminals*** ***No. 1 — No. 2:***	Is the resistance 1 MΩ or more?	Go to step **4**.	Replace the master cylinder. <Ref. to BR-27, Master Cylinder.>
4	**CHECK GROUND SHORT OF HARNESS.** 1) Disconnect the connector (i10) from combination meter. 2) Measure the resistance between combination meter connector and chassis ground. ***Connector & terminal*** ***(i10) No. 24 — Chassis ground:***	Is the resistance 1 MΩ or more?	Go to step **5**.	Repair the harness connector between combination meter and brake fluid level switch.
5	**CHECK LAN SYSTEM.** Check the DTC in LAN system. <Ref. to LAN(diag)-10, OPERATION, Read Diagnostic Trouble Code (DTC).>	Is DTC of LAN system displayed?	Perform the diagnosis according to DTC. <Ref. to LAN(diag)-31, List of Diagnostic Trouble Code (DTC).>	Go to step **6**.
6	**CHECK COMBINATION METER.** Check the combination meter. <Ref. to IDI-6, SELF-DIAGNOSIS DISPLAY MODE, OPERATION, Combination Meter System.>	Is combination meter OK?	Go to step **7**.	Replace the combination meter case assembly. <Ref. to IDI-20, REMOVAL, Combination Meter.>
7	**CHECK VDC SYSTEM.** Check the DTC in VDC system. <Ref. to VDC(diag)-23, OPERATION, Read Diagnostic Trouble Code (DTC).>	Is DTC of VDC system displayed?	Perform the diagnosis according to DTC. <Ref. to VDC(diag)-35, List of Diagnostic Trouble Code (DTC).>	Go to step **8**.
8	**CHECK ELECTRONIC PARKING BRAKE CM.** With the parking brake released, display the current data of the electronic parking brake CM using Subaru Select Monitor.	Is "Brake Warning Light" ON?	Replace the electronic parking brake CM. <Ref. to PB-5, Parking Brake Actuator.>	Go to step **9**.
9	**CHECK ELECTRONIC PARKING BRAKE CM.** With the parking brake released, display the current data of the electronic parking brake CM using Subaru Select Monitor.	Is "Parking System Warning Light" ON?	Replace the electronic parking brake CM. <Ref. to PB-5, Parking Brake Actuator.>	Go to step **10**.
10	**CHECK OTHER DTC DETECTION.**	Is any other DTC displayed?	Perform the diagnosis according to DTC.	It results from a temporary poor contact interference.

11.List of Diagnostic Trouble Code (DTC)

A: LIST

DTC	Detailed code	Display	Content of diagnosis	Reference
C0221	504A 504B 504C	Parking Switch Line (abnormal)	Parking switch malfunction	<Ref. to PB(diag)-36, DTC C0221 PARKING POSITION SWITCH, Diagnostic Procedure with Diagnostic Trouble Code (DTC).>
C0222	504E	Hill hold switch circuit	Hill hold switch malfunction	<Ref. to PB(diag)-38, DTC C0222 HILL HOLD SWITCH CIRCUIT, Diagnostic Procedure with Diagnostic Trouble Code (DTC).>
C0231	C110	ECM Failure	Malfunction signal reception from ECM	<Ref. to PB(diag)-40, DTC C0231 ECM FAILURE, Diagnostic Procedure with Diagnostic Trouble Code (DTC).>
C0232	C114	AT abnormal	Malfunction signal reception from TCM	<Ref. to PB(diag)-40, DTC C0232 AT ABNORMAL, Diagnostic Procedure with Diagnostic Trouble Code (DTC).>
C0233	509E 509F	MT shift switch circuit	Malfunction of neutral position switch, back-up light switch	<Ref. to PB(diag)-41, DTC C0233 MT SHIFT SWITCH CIRCUIT, Diagnostic Procedure with Diagnostic Trouble Code (DTC).>
C0234	C111	VDC Failure	Malfunction signal reception from VDC CM	<Ref. to PB(diag)-42, DTC C0234 VDC FAILURE, Diagnostic Procedure with Diagnostic Trouble Code (DTC).>
C0235	5046	Ignition switch circuit	No match of IGN input	<Ref. to PB(diag)-43, DTC C0235 IGNITION SWITCH CIRCUIT, Diagnostic Procedure with Diagnostic Trouble Code (DTC).>
C0241	5000 502A 5026 C100	Electrical Control Module	Parking brake control module is faulty.	<Ref. to PB(diag)-45, DTC C0241 ELECTRICAL CONTROL MODULE, Diagnostic Procedure with Diagnostic Trouble Code (DTC).>
C0242	5040 5041	Power Supply Voltage Failure	Parking brake control module power supply voltage is faulty.	<Ref. to PB(diag)-47, DTC C0242 POWER SUPPLY VOLTAGE FAILURE, Diagnostic Procedure with Diagnostic Trouble Code (DTC).>
	5042	Internal Power Supply Voltage abnormal	Parking brake control module inner power supply voltage is faulty.	<Ref. to PB(diag)-48, DTC C0242 INTERNAL POWER SUPPLY VOLTAGE ABNORMAL, Diagnostic Procedure with Diagnostic Trouble Code (DTC).>
C0243	50D1 50D3 50D4 50D5 50D6	Parameter selection error	Parking brake control module parameter selection failure	<Ref. to PB(diag)-49, DTC C0243 PARAMETER SELECTION ERROR, Diagnostic Procedure with Diagnostic Trouble Code (DTC).>
C0251	5020 5022 5028 50CE 50CF	Actuator Line (abnormal)	Actuator line of parking brake control module is faulty.	<Ref. to PB(diag)-50, DTC C0251 ACTUATOR LINE (ABNORMAL), Diagnostic Procedure with Diagnostic Trouble Code (DTC).>
C0252	5018 5019 501A 50A0	Motor Malfunction	Motor malfunction of parking brake control module	<Ref. to PB(diag)-51, DTC C0252 MOTOR MALFUNCTION, Diagnostic Procedure with Diagnostic Trouble Code (DTC).>
C0253	501F 50C6	Actuator Stroke Excess	Actuator stroke excess	<Ref. to PB(diag)-52, DTC C0253 ACTUATOR STROKE EXCESS, Diagnostic Procedure with Diagnostic Trouble Code (DTC).>
C0261	C101 C13F	Improper CAN Communication	Defective CAN communication	<Ref. to PB(diag)-52, DTC C0261 IMPROPER CAN COMMUNICATION, Diagnostic Procedure with Diagnostic Trouble Code (DTC).>

DTC	Detailed code	Display	Content of diagnosis	Reference
C0262	C10B	TCM Communication Circuit	CAN signal not received from TCM	<Ref. to PB(diag)-53, DTC C0262 TCM COMMUNICATION CIRCUIT, Diagnostic Procedure with Diagnostic Trouble Code (DTC).>
C0263	C107	ECM Communication Circuit	CAN signal not received from ECM	<Ref. to PB(diag)-54, DTC C0263 ECM COMMUNICATION CIRCUIT, Diagnostic Procedure with Diagnostic Trouble Code (DTC).>
C0264	C108 C141	VDC communication system	CAN signal not received from VDC CM	<Ref. to PB(diag)-55, DTC C0264 VDC COMMUNICATION SYSTEM, Diagnostic Procedure with Diagnostic Trouble Code (DTC).>
C0265	C109	Body Integrated Module Communication Circuit	CAN signal not received from body integrated unit	<Ref. to PB(diag)-56, DTC C0265 BODY INTEGRATED MODULE COMMUNICATION CIRCUIT, Diagnostic Procedure with Diagnostic Trouble Code (DTC).>
C0267	C13E	Meter communication system	CAN signal not received from combination meter	<Ref. to PB(diag)-57, DTC C0267 METER COMMUNICATION SYSTEM, Diagnostic Procedure with Diagnostic Trouble Code (DTC).>
C0271	5030 5031 503C 50BE 50C5 50CB 50CC	Force Sensor Line (abnormal)	Defective force sensor	<Ref. to PB(diag)-57, DTC C0271 FORCE SENSOR LINE (ABNORMAL), Diagnostic Procedure with Diagnostic Trouble Code (DTC).>
C0272	501B 503D 503E	Temperature Sensor Line (abnormal)	Defective temperature sensor	<Ref. to PB(diag)-57, DTC C0272 TEMPERATURE SENSOR LINE (ABNORMAL), Diagnostic Procedure with Diagnostic Trouble Code (DTC).>
C0273	50B9 50BA	Stroke Sensor Line (abnormal)	Defective stroke sensor	<Ref. to PB(diag)-57, DTC C0273 STROKE SENSOR LINE (ABNORMAL), Diagnostic Procedure with Diagnostic Trouble Code (DTC).>
C0274	5033 503A	Clutch sensor circuit	Defective clutch sensor	<Ref. to PB(diag)-58, DTC C0274 CLUTCH SENSOR CIRCUIT, Diagnostic Procedure with Diagnostic Trouble Code (DTC).>
C0275	5037	Longitudinal G sensor circuit	Defective longitudinal G sensor	<Ref. to PB(diag)-61, DTC C0275 LONGITUDINAL G SENSOR CIRCUIT, Diagnostic Procedure with Diagnostic Trouble Code (DTC).>
C0281	50CA	Mid stop condition	Stop in the middle of stroke while actuator operation	<Ref. to PB(diag)-63, DTC C0281 MID STOP CONDITION, Diagnostic Procedure with Diagnostic Trouble Code (DTC).>
C0282	50C9	Emergency cancel status	Perform the emergency cancel.	<Ref. to PB(diag)-64, DTC C0282 EMERGENCY CANCEL STATUS, Diagnostic Procedure with Diagnostic Trouble Code (DTC).>

12.Diagnostic Procedure with Diagnostic Trouble Code (DTC)

A: DTC C0221 PARKING POSITION SWITCH

DTC DETECTING CONDITION:

- Defective parking brake switch
- Defective harness connector

TROUBLE SYMPTOM:

- Electronic parking brake warning light illuminates. (C6 model)
- Brake warning light blinks. (Models other than C6 model)
- Parking brake system does not operate.

NOTE:

- When the parking brake switch is stopped at the mid-operation, or operated too slowly, this DTC may be stored; this is not malfunction, however.
- When the parking brake switch is pressed or pulled for 90 seconds or more, subsequent switch operations are not accepted. At this time, the electronic parking brake warning light illuminates on C6 model, or the brake warning light blinks on models other than C6 model. When turning the ignition switch from OFF to ON, the operation enabled status is restored.

WIRING DIAGRAM:

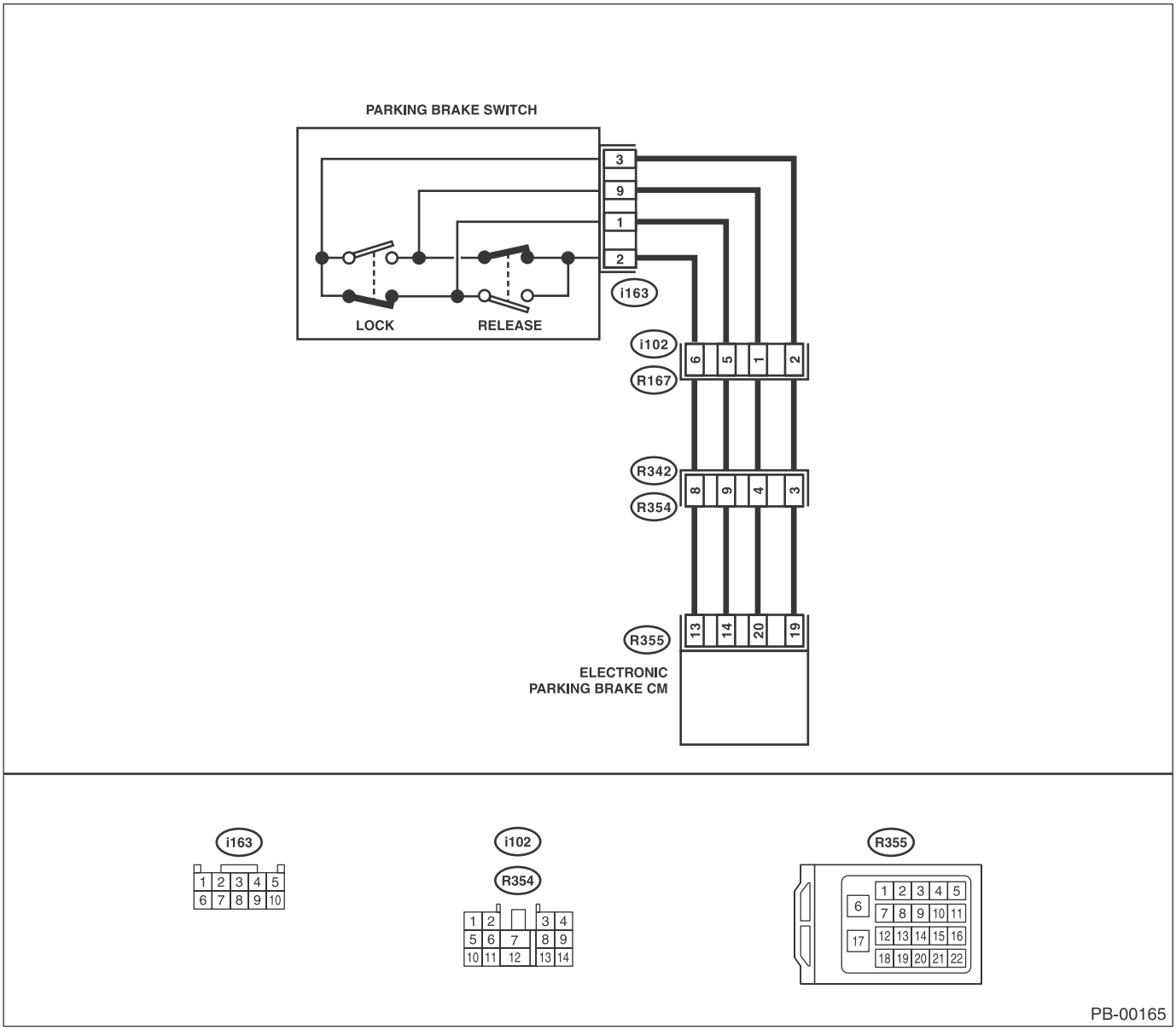

	Step	Check	Yes	No
1	**CHECK HARNESS.** 1) Turn the ignition switch to OFF. 2) Disconnect the connectors from the electronic parking brake CM, and parking brake switch. 3) Measure the resistance of harness between electronic parking brake CM and parking brake switch connector. ***Connector & terminal*** ***(R355) No. 13 — (i163) No. 2:*** ***(R355) No. 14 — (i163) No. 1:*** ***(R355) No. 20 — (i163) No. 9:*** ***(R355) No. 19 — (i163) No. 3:***	Is the resistance less than 1 Ω?	Go to step **2**.	Repair the harness and connector between electronic parking brake CM and parking brake switch connector.
2	**CHECK HARNESS.** Measure the resistance of harness between parking brake switch connector and chassis ground. ***Connector & terminal*** ***(i163) No. 2 — Chassis ground:*** ***(i163) No. 1 — Chassis ground:*** ***(i163) No. 9 — Chassis ground:*** ***(i163) No. 3 — Chassis ground:***	Is the resistance 1 MΩ or more?	Go to step **3**.	Repair ground short of harness between electronic parking brake CM and parking brake switch connector.
3	**CHECK HARNESS.** Measure the voltage between parking brake switch connector and chassis ground. ***Connector & terminal*** ***(i163) No. 2 (+) — Chassis ground (–):*** ***(i163) No. 1 (+) — Chassis ground (–):*** ***(i163) No. 9 (+) — Chassis ground (–):*** ***(i163) No. 3 (+) — Chassis ground (–):***	Is the voltage less than 1 V?	Go to step **4**.	Repair short to power supply of harness between electronic parking brake CM and parking brake switch connector.
4	**CHECK PARKING BRAKE SWITCH.** Check the parking brake switch. <Ref. to PB-9, INSPECTION, Parking Brake Switch.>	Is the parking brake switch normal?	Go to step **5**.	Replace the parking brake switch. <Ref. to PB-9, Parking Brake Switch.>
5	**CHECK ELECTRONIC PARKING BRAKE CM.** 1) Connect all connectors. 2) Clear the memory. <Ref. to PB(diag)-24, Clear Memory Mode.> 3) Perform the Inspection Mode. <Ref. to PB(diag)-23, Inspection Mode.> 4) Read the DTC.	Is the same DTC displayed?	Replace the electronic parking brake CM. <Ref. to PB-5, Parking Brake Actuator.>	Go to step **6**.
6	**CHECK OTHER DTC DETECTION.**	Is any other DTC displayed?	Perform the diagnosis according to DTC.	It results from a temporary noise interference.

B: DTC C0222 HILL HOLD SWITCH CIRCUIT

DTC DETECTING CONDITION:

- Defective hill hold switch
- Defective harness connector

TROUBLE SYMPTOM:

- Electronic parking brake warning light illuminates. (C6 model)
- Brake warning light blinks. (Models other than C6 model)
- Hill hold function cannot be set.

NOTE:
When hill hold switch is pressed for 30 seconds or more, hill hold indicator goes off, and subsequent switch operations are not accepted. At this time, the electronic parking brake warning light illuminates on C6 model, or the brake warning light blinks on models other than C6 model. When turning the ignition switch from OFF to ON, the operation enabled status is restored.

WIRING DIAGRAM:

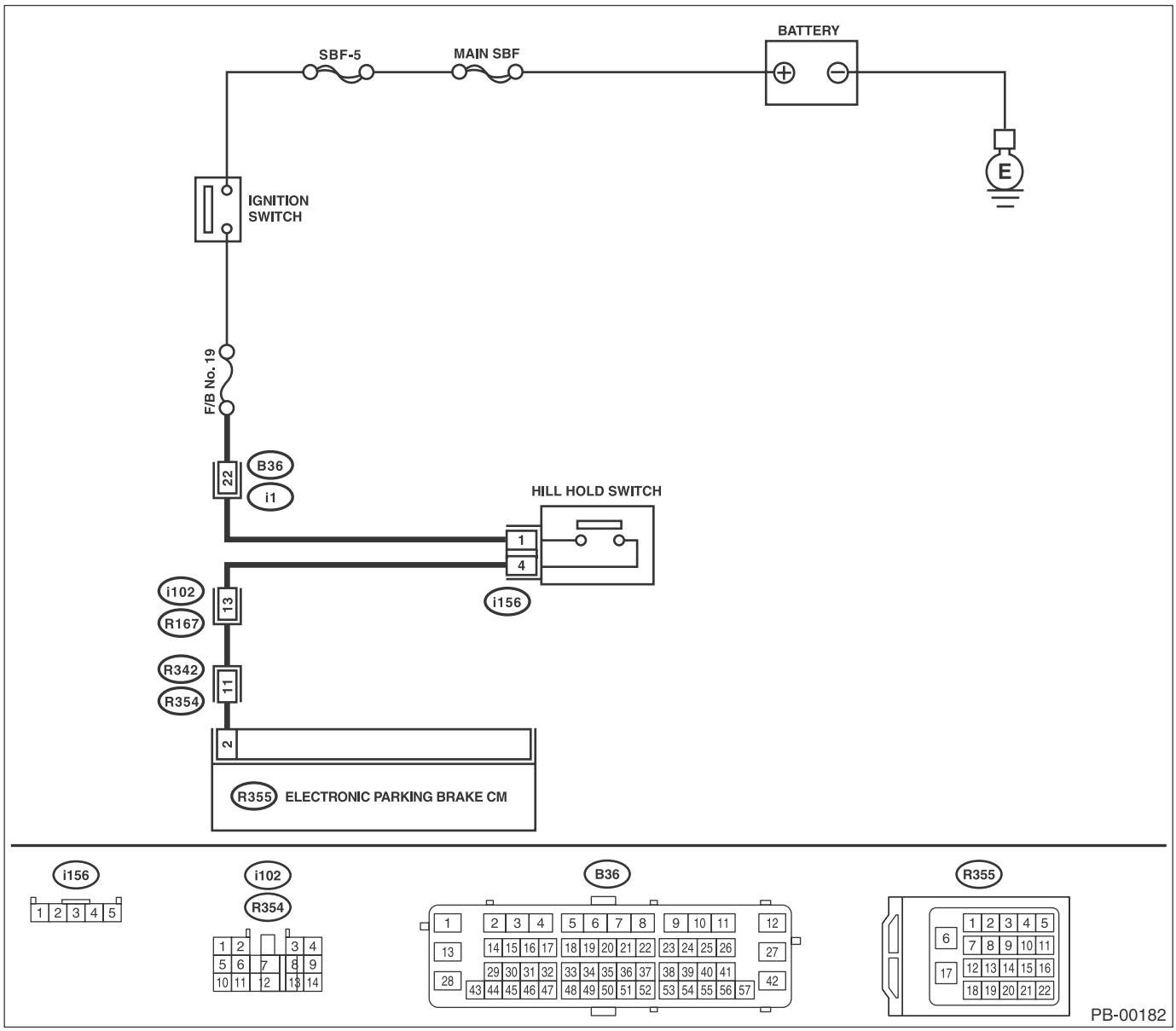

	Step	Check	Yes	No
1	**CHECK HILL HOLD SWITCH POWER SUPPLY.** 1) Turn the ignition switch to OFF. 2) Disconnect the connector from hill hold switch. 3) Turn the ignition switch to ON. 4) Measure the voltage between hill hold switch connector and chassis ground. ***Connector & terminal*** ***(i156) No. 1 (+) — Chassis ground (–):***	Is the voltage 10 — 15 V?	Go to step **2**.	Repair the power supply circuit of hill hold switch.
2	**CHECK HARNESS.** 1) Turn the ignition switch to OFF. 2) Disconnect the connectors from the electronic parking brake CM. 3) Measure the resistance of harness between hill hold switch and electronic parking brake CM connector. ***Connector & terminal*** ***(i156) No. 4 — (R355) No. 2:***	Is the resistance less than 1 Ω?	Go to step **3**.	Repair the harness and connector between hill hold switch and electronic parking brake CM connector.
3	**CHECK HARNESS.** Measure the resistance of harness between hill hold switch connector and chassis ground. ***Connector & terminal*** ***(i156) No. 4 — Chassis ground:***	Is the resistance less than 1 MΩ?	Go to step **4**.	Repair ground short of harness between hill hold switch and electronic parking brake CM connector.
4	**CHECK HARNESS.** Measure the voltage between hill hold switch connector and chassis ground. ***Connector & terminal*** ***(i156) No. 4 (+) — Chassis ground (–):***	Is the voltage less than 1 V?	Go to step **5**.	Repair short to power supply of harness between hill hold switch and electronic parking brake CM connector.
5	**CHECK HILL HOLD SWITCH.** Check the hill hold switch. <Ref. to PB-9, HILL HOLD SWITCH, INSPECTION, Parking Brake Switch.>	Is the hill hold switch normal?	Go to step **6**.	Replace the hill hold switch. <Ref. to PB-9, REMOVAL, Parking Brake Switch.>
6	**CHECK ELECTRONIC PARKING BRAKE CM.** 1) Connect all connectors. 2) Clear the memory. <Ref. to PB(diag)-24, Clear Memory Mode.> 3) Perform the Inspection Mode. <Ref. to PB(diag)-23, Inspection Mode.> 4) Read the DTC.	Is the same DTC displayed?	Replace the electronic parking brake CM. <Ref. to PB-5, Parking Brake Actuator.>	Go to step **7**.
7	**CHECK OTHER DTC DETECTION.**	Is any other DTC displayed?	Perform the diagnosis according to DTC.	It results from a temporary poor contact interference.

C: DTC C0231 ECM FAILURE

DTC DETECTING CONDITION:
Faulty signal received from engine control module (ECM)
TROUBLE SYMPTOM:
- Electronic parking brake warning light illuminates. (C6 model)
- Brake warning light blinks. (Models other than C6 model)
- Hill hold function and accelerator interlocking release function do not operate.

NOTE:
Refer to EN section for diagnostic procedure. <Ref. to EN(H4SO)(diag)-2, Basic Diagnostic Procedure.> <Ref. to EN(H4DOTC)(diag)-2, Basic Diagnostic Procedure.> <Ref. to EN(H6DO)(diag)-2, Basic Diagnostic Procedure.>

D: DTC C0232 AT ABNORMAL

DTC DETECTING CONDITION:
Faulty signal received from transmission control module (TCM)
TROUBLE SYMPTOM:
- Electronic parking brake warning light illuminates. (C6 model)
- Brake warning light blinks. (Models other than C6 model)
- Hill hold function and accelerator interlocking release function do not operate.

NOTE:
Refer to CVT or 5AT section for diagnostic procedure. <Ref. to CVT(diag)-2, Basic Diagnostic Procedure.> <Ref. to 5AT(diag)-2, Basic Diagnostic Procedure.>

E: DTC C0233 MT SHIFT SWITCH CIRCUIT

DTC DETECTING CONDITION:

- Defective neutral position switch
- Defective back-up light switch
- Defective harness connector

TROUBLE SYMPTOM:

- Electronic parking brake warning light illuminates. (C6 model)
- Brake warning light blinks. (Models other than C6 model)
- Hill hold function and accelerator interlocking release function do not operate.

WIRING DIAGRAM:

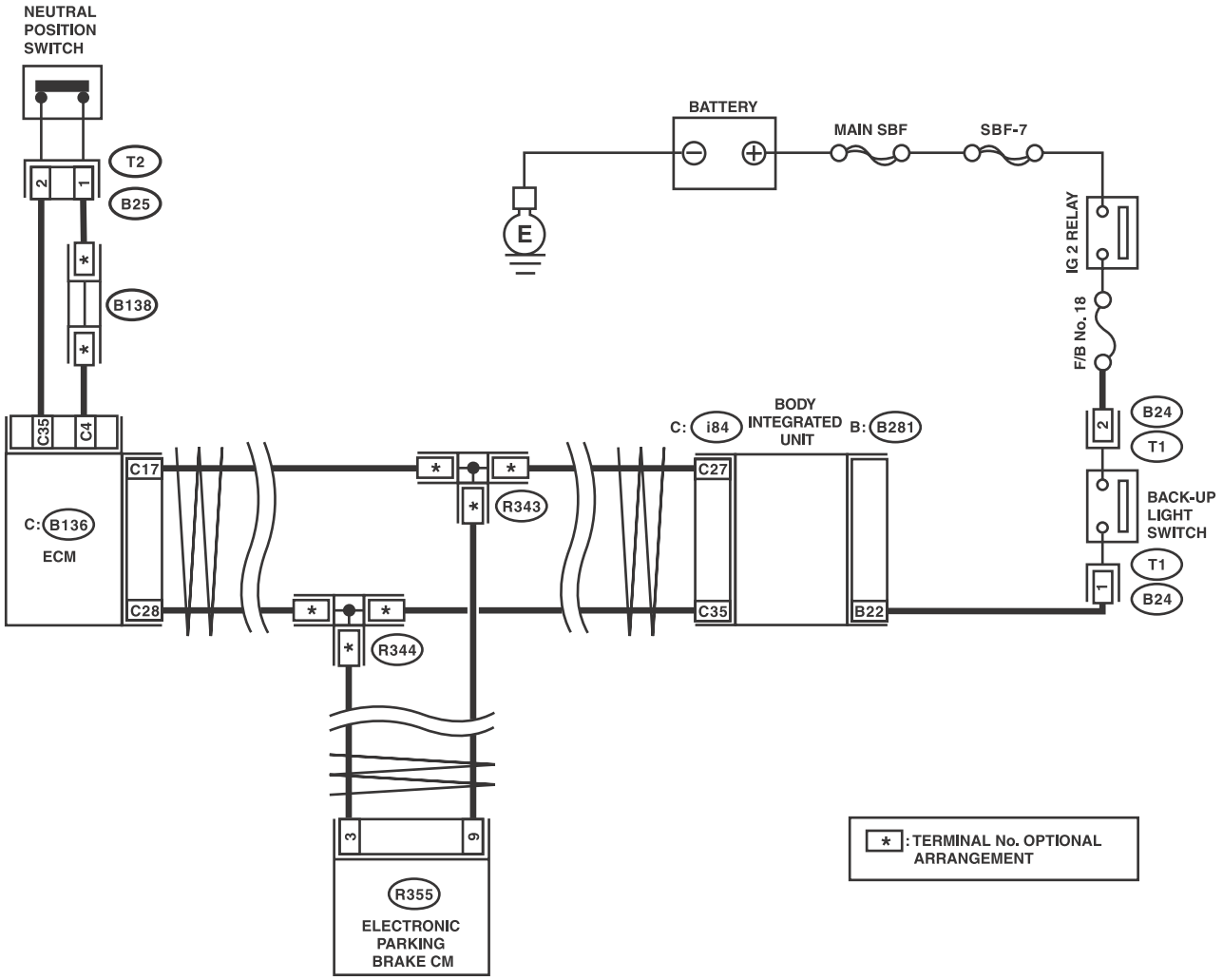

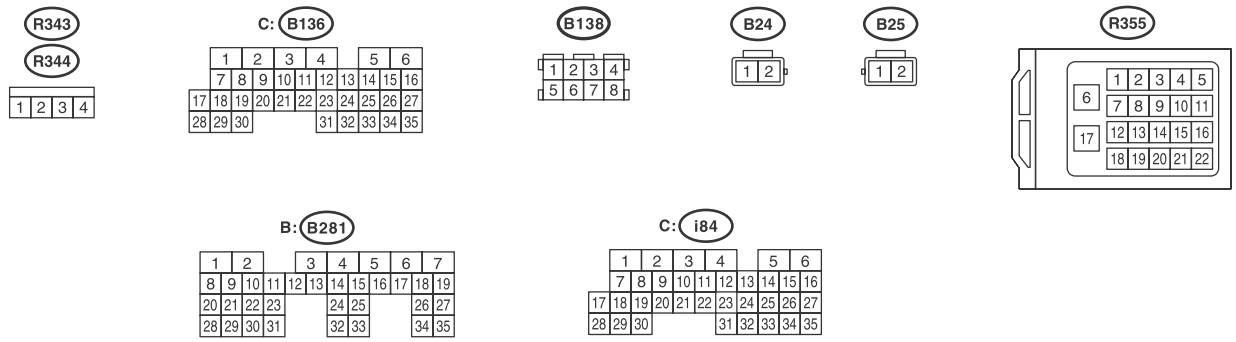

PB-00167

	Step	Check	Yes	No
1	**CHECK OUTPUT OF NEUTRAL POSITION SWITCH USING SUBARU SELECT MONITOR.** 1) Select “Current Data Display & Save” for “Engine Control System” on Subaru Select Monitor. <Ref. to EN(H4DOTC)(diag)-37, Subaru Select Monitor.> 2) Read the neutral position switch output displayed on the screen.	Is “ON” displayed on the screen at neutral state?	Go to step **2**.	Perform the diagnosis for the engine. <Ref. to EN(H4DOTC)(diag)-43, Read Diagnostic Trouble Code (DTC).>
2	**CHECK OUTPUT OF BACK-UP LIGHT SWITCH USING SUBARU SELECT MONITOR.** 1) Select “Current Data Display & Save” for “Integ. unit mode” on Subaru Select Monitor. <Ref. to BC(diag)-13, Read Current Data.> 2) Read the MT reverse SW output displayed on the screen.	Is “ON” displayed on the screen at reverse state?	Go to step **3**.	Check DTC of integrated unit. <Ref. to BC(diag)-11, Read Diagnostic Trouble Code (DTC).>
3	**CHECK LAN SYSTEM.** Check the DTC in LAN system. <Ref. to LAN(diag)-10, OPERATION, Read Diagnostic Trouble Code (DTC).>	Is DTC of LAN system displayed?	Perform the diagnosis according to DTC. <Ref. to LAN(diag)-31, List of Diagnostic Trouble Code (DTC).>	Go to step **4**.
4	**CHECK ELECTRONIC PARKING BRAKE CM.** 1) Clear the memory. <Ref. to PB(diag)-24, Clear Memory Mode.> 2) Perform the Inspection Mode. <Ref. to PB(diag)-23, Inspection Mode.> 3) Read the DTC.	Is the same DTC displayed?	Replace the electronic parking brake CM. <Ref. to PB-5, Parking Brake Actuator.>	Go to step **5**.
5	**CHECK OTHER DTC DETECTION.**	Is any other DTC displayed?	Perform the diagnosis according to DTC.	It results from a temporary poor contact interference.

F: DTC C0234 VDC FAILURE

DTC DETECTING CONDITION:

Faulty signal received from VDC control module

TROUBLE SYMPTOM:

- Electronic parking brake warning light illuminates. (C6 model)
- Brake warning light blinks. (Models other than C6 model)
- Hill hold function and accelerator interlocking release function do not operate.
- Parking brake system occasionally may not operate.

NOTE:

Refer to VDC section for diagnostic procedure. <Ref. to VDC(diag)-2, Basic Diagnostic Procedure.>

G: DTC C0235 IGNITION SWITCH CIRCUIT

DTC DETECTING CONDITION:

IGN input of the parking brake control module and IGN input of VDC control module do not match.

TROUBLE SYMPTOM:

- Parking brake cannot be released.
- Electronic parking brake warning light illuminates. (C6 model)
- Brake warning light blinks. (Models other than C6 model)
- Hill hold does not function.

WIRING DIAGRAM:

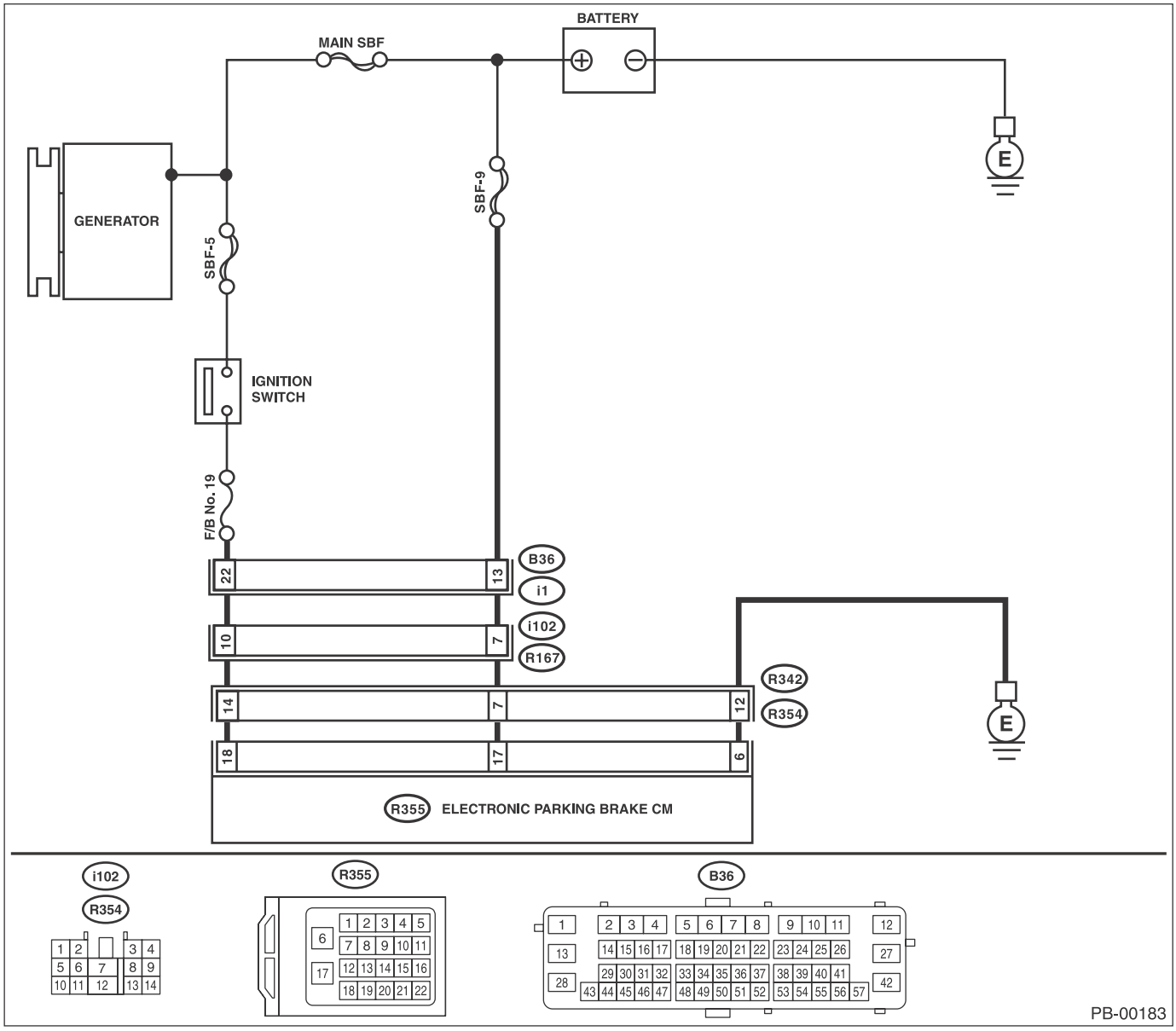

	Step	Check	Yes	No
1	**CHECK INPUT VOLTAGE FOR ELECTRONIC PARKING BRAKE CM.** 1) Turn the ignition switch to OFF. 2) Disconnect the connectors from the electronic parking brake CM. 3) Turn the ignition switch to ON. 4) Measure the resistance between electronic parking brake CM connector and chassis ground. ***Connector & terminal*** ***(R355) No. 18 (+) — Chassis ground (–):***	Is the voltage 10 — 15 V?	Go to step **2**.	Repair the power supply circuit.
2	**CHECK GROUND CIRCUIT OF ELECTRONIC PARKING BRAKE CM.** 1) Turn the ignition switch to OFF. 2) Measure the resistance between electronic parking brake CM connector and chassis ground. ***Connector & terminal*** ***(R355) No. 6 — Chassis ground:***	Is the resistance less than 10 Ω?	Go to step **3**.	Repair the defective ground circuit of the electronic parking brake CM.
3	**CHECK VDC.** 1) Turn the ignition switch to ON. 2) Check DTC of VDC. <Ref. to VDC(diag)-23, OPERATION, Read Diagnostic Trouble Code (DTC).>	Is DTC of VDC displayed?	Perform the diagnosis according to DTC. <Ref. to VDC(diag)-35, List of Diagnostic Trouble Code (DTC).>	Go to step **4**.
4	**CHECK LAN SYSTEM.** Check the DTC in LAN system. <Ref. to LAN(diag)-10, OPERATION, Read Diagnostic Trouble Code (DTC).>	Is DTC of LAN system displayed?	Perform the diagnosis according to DTC. <Ref. to LAN(diag)-31, List of Diagnostic Trouble Code (DTC).>	Go to step **5**.
5	**CHECK POOR CONTACT OF CONNECTORS.**	Is there poor contact of power supply circuit, ground circuit and electronic parking brake CM connector?	Repair the connector.	Go to step **6**.
6	**CHECK ELECTRONIC PARKING BRAKE CM.** 1) Connect all connectors. 2) Clear the memory. <Ref. to PB(diag)-24, Clear Memory Mode.> 3) Perform the Inspection Mode. <Ref. to PB(diag)-23, Inspection Mode.> 4) Read the DTC.	Is the same DTC displayed?	Replace the electronic parking brake CM. <Ref. to PB-5, Parking Brake Actuator.>	Go to step **7**.
7	**CHECK OTHER DTC DETECTION.**	Is any other DTC displayed?	Perform the diagnosis according to DTC.	It results from a temporary poor contact interference.

H: DTC C0241 ELECTRICAL CONTROL MODULE

DTC DETECTING CONDITION:

Defective parking brake control module

TROUBLE SYMPTOM:

- Electronic parking brake warning light illuminates. (C6 model)
- Brake warning light blinks. (Models other than C6 model)
- Parking brake system does not operate.

WIRING DIAGRAM:

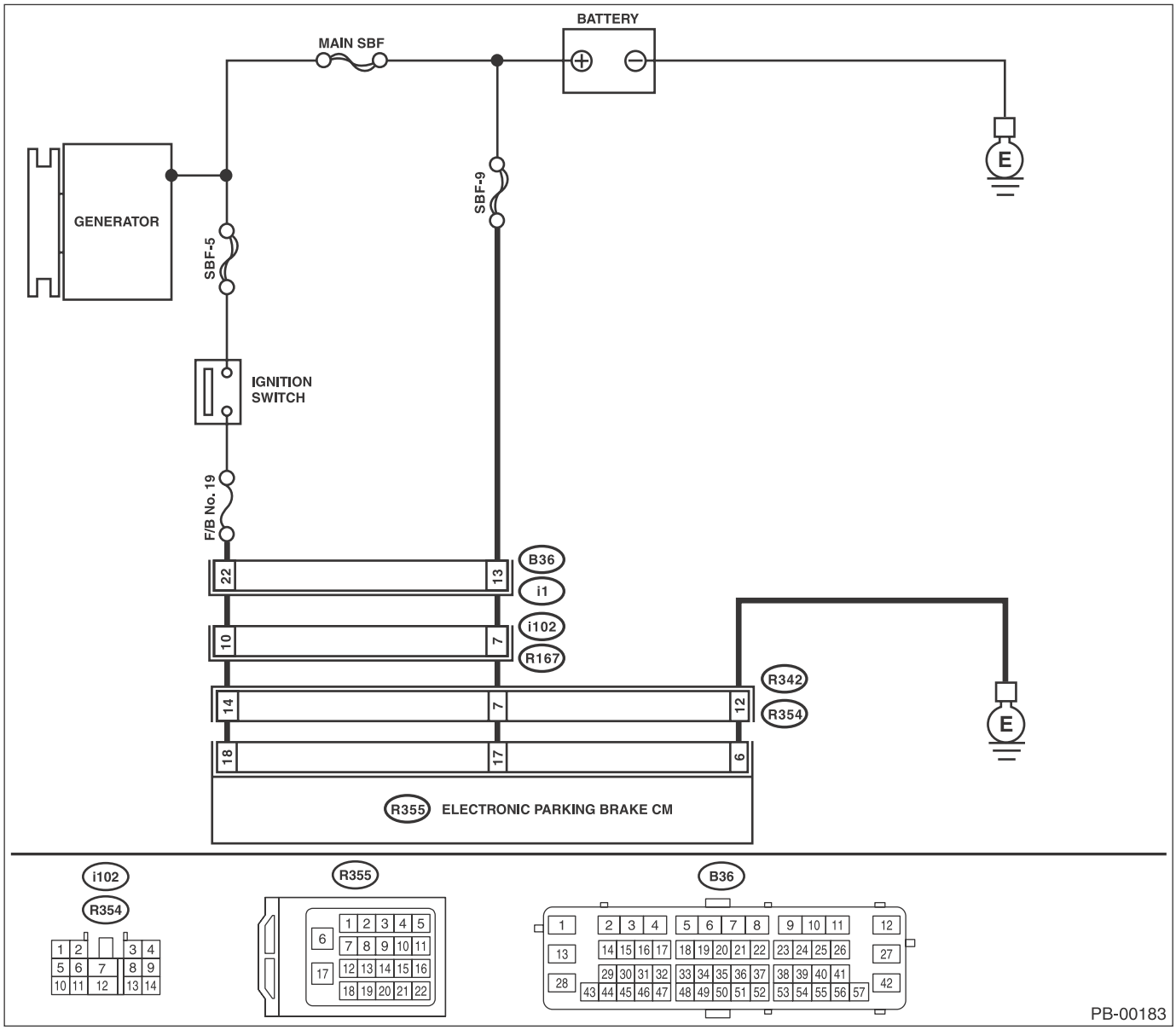

	Step	Check	Yes	No
1	**CHECK INPUT VOLTAGE FOR ELECTRONIC PARKING BRAKE CM.** 1) Turn the ignition switch to OFF. 2) Disconnect the connectors from the electronic parking brake CM. 3) Turn the ignition switch to ON. 4) Measure the voltage between electronic parking brake CM connector and chassis ground. ***Connector & terminal*** ***(R355) No. 18 (+) — Chassis ground (–):*** ***(R355) No. 17 (+) — Chassis ground (–):***	Is the voltage 10 — 15 V?	Go to step **2**.	Repair the power supply circuit.
2	**CHECK GROUND CIRCUIT OF ELECTRONIC PARKING BRAKE CM.** 1) Turn the ignition switch to OFF. 2) Measure the resistance between electronic parking brake CM connector and chassis ground. ***Connector & terminal*** ***(R355) No. 6 — Chassis ground:***	Is the resistance less than 10 Ω?	Go to step **3**.	Repair the defective ground circuit of the electronic parking brake CM.
3	**CHECK CAUSE OF SIGNAL NOISE.** Make sure the radio wave devices and electronic components are installed correctly.	Are the radio wave devices and electronic components installed correctly?	Go to step **4**.	Install the radio wave devices and electronic components properly.
4	**CHECK CAUSE OF SIGNAL NOISE.** Check if the noise sources (such as an antenna) are installed near the electronic parking brake CM harness.	Are noise sources installed?	Install the noise sources apart from the electronic parking brake CM harness.	Go to step **5**.
5	**CHECK POOR CONTACT OF CONNECTORS.**	Is there poor contact of power supply circuit, ground circuit and electronic parking brake CM connector?	Repair the connector.	Go to step **6**.
6	**CHECK ELECTRONIC PARKING BRAKE CM.** 1) Connect all connectors. 2) Clear the memory. <Ref. to PB(diag)-24, Clear Memory Mode.> 3) Perform the Inspection Mode. <Ref. to PB(diag)-23, Inspection Mode.> 4) Read the DTC.	Is the same DTC displayed?	Replace the electronic parking brake CM. <Ref. to PB-5, Parking Brake Actuator.>	Go to step **7**.
7	**CHECK OTHER DTC DETECTION.**	Is any other DTC displayed?	Perform the diagnosis according to DTC.	It results from a temporary poor contact interference.

I: DTC C0242 POWER SUPPLY VOLTAGE FAILURE

DTC DETECTING CONDITION:
Defective power supply voltage for the electronic parking brake CM
TROUBLE SYMPTOM:
- Electronic parking brake warning light illuminates. (C6 model)
- Brake warning light blinks. (Models other than C6 model)
- Parking brake system does not operate.

NOTE:
Warning lights go off if voltage returns.
WIRING DIAGRAM:

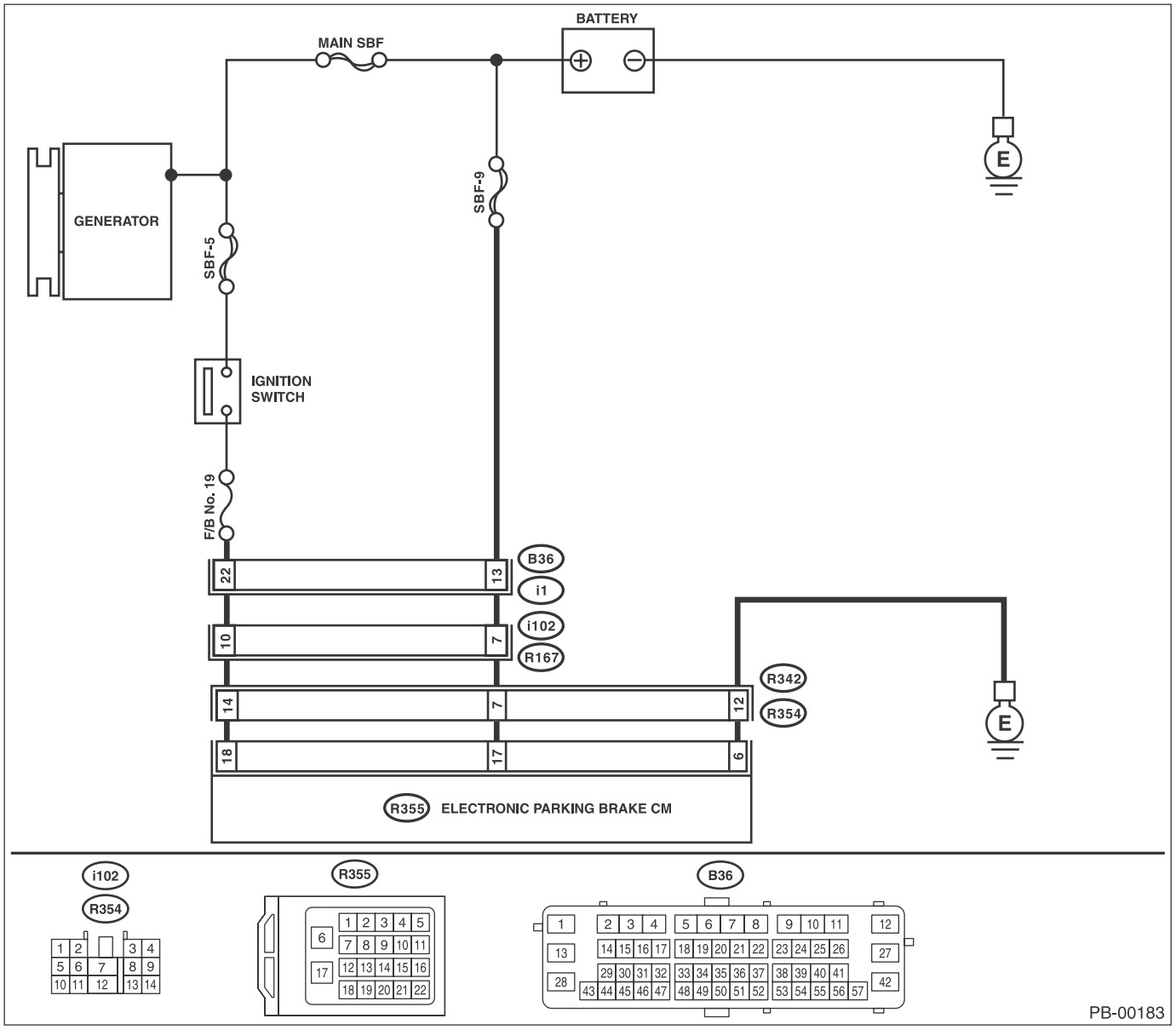

	Step	Check	Yes	No
1	**CHECK GENERATOR.** 1) Start the engine. 2) Run the engine at idle after warming up. 3) Measure the voltage between generator terminal B and chassis ground. ***Terminals*** ***Generator terminal B (+) — Chassis ground (–):***	Is the voltage 10 — 15 V?	Go to step **2**.	Repair the generator. <Ref. to SC(H4SO)-18, Generator.>
2	**CHECK BATTERY TERMINAL.** Turn the ignition switch to OFF.	Are the positive and negative battery terminals clamped tightly?	Go to step **3**.	Tighten the terminal.
3	**CHECK INPUT VOLTAGE FOR ELECTRONIC PARKING BRAKE CM.** 1) Disconnect the connectors from the electronic parking brake CM. 2) Run the engine at idle. 3) Operate devices such as headlights, air conditioner, defogger, etc. which produce an electrical load. 4) Measure the voltage between electronic parking brake CM connector and chassis ground. ***Connector & terminal*** ***(R355) No. 18 (+) — Chassis ground (–):***	Is the voltage 10 — 15 V?	Go to step **4**.	Repair the power supply circuit.
4	**CHECK GROUND CIRCUIT OF ELECTRONIC PARKING BRAKE CM.** 1) Turn the ignition switch to OFF. 2) Measure the resistance between electronic parking brake CM connector and chassis ground. ***Connector & terminal*** ***(R355) No. 6 — Chassis ground:***	Is the resistance less than 10 Ω?	Go to step **5**.	Repair the defective ground circuit of the electronic parking brake CM.
5	**CHECK POOR CONTACT OF CONNECTORS.**	Is there poor contact of power supply circuit, ground circuit and electronic parking brake CM connector?	Repair the connector.	Go to step **6**.
6	**CHECK ELECTRONIC PARKING BRAKE CM.** 1) Connect all connectors. 2) Clear the memory. <Ref. to PB(diag)-24, Clear Memory Mode.> 3) Perform the Inspection Mode. <Ref. to PB(diag)-23, Inspection Mode.> 4) Read the DTC.	Is the same DTC displayed?	Replace the electronic parking brake CM. <Ref. to PB-5, Parking Brake Actuator.>	Go to step **7**.
7	**CHECK OTHER DTC DETECTION.**	Is any other DTC displayed?	Perform the diagnosis according to DTC.	It results from a temporary poor contact interference.

J: DTC C0242 INTERNAL POWER SUPPLY VOLTAGE ABNORMAL

NOTE:
For the diagnostic procedure, refer to DTC C0242 “Power Supply Voltage Failure”. <Ref. to PB(diag)-47, DTC C0242 POWER SUPPLY VOLTAGE FAILURE, Diagnostic Procedure with Diagnostic Trouble Code (DTC).>

K: DTC C0243 PARAMETER SELECTION ERROR

DTC DETECTING CONDITION:
Parameter selection error for the electronic parking brake CM
TROUBLE SYMPTOM:
- Electronic parking brake warning light illuminates. (C6 model)
- Brake warning light blinks. (Models other than C6 model)
- Hill hold function and accelerator interlocking release function do not operate.

NOTE:
After performing Parameter Initialization Mode, make sure to perform the Force Sensor Calibration Mode and Clutch Sensor Calibration Mode. <Ref. to PB(diag)-17, FORCE SENSOR CALIBRATION MODE, OPERATION, Subaru Select Monitor.> <Ref. to PB(diag)-19, CLUTCH SENSOR CALIBRATION MODE, OPERATION, Subaru Select Monitor.>

	Step	Check	Yes	No
1	**CHECK ECM, TCM AND COMBINATION METER.** Check that ECM, TCM and combination meter with correct specifications are installed.	Are correct ECM, TCM and combination meter installed?	Go to step **2**.	Replace with parts with correct specifications.
2	**INITIALIZE PARAMETER USING SUBARU SELECT MONITOR.** 1) Using the Subaru Select Monitor, initialize the parameter for the electronic parking brake CM. <Ref. to PB(diag)-18, PARAMETER INITIALIZATION MODE, OPERATION, Subaru Select Monitor.> 2) Perform calibration of the force sensor. <Ref. to PB(diag)-17, FORCE SENSOR CALIBRATION MODE, OPERATION, Subaru Select Monitor.> 3) Perform calibration of the clutch sensor. <Ref. to PB(diag)-19, CLUTCH SENSOR CALIBRATION MODE, OPERATION, Subaru Select Monitor.> 4) Clear the memory. <Ref. to PB(diag)-24, Clear Memory Mode.> 5) Read the DTC.	Is the same DTC displayed?	Replace the electronic parking brake CM. <Ref. to PB-5, Parking Brake Actuator.>	It results from a temporary noise interference.

L: DTC C0251 ACTUATOR LINE (ABNORMAL)

DTC DETECTING CONDITION:
Defective parking brake control module

TROUBLE SYMPTOM:
- Electronic parking brake warning light illuminates. (C6 model)
- Brake warning light blinks. (Models other than C6 model)
- Parking brake system does not operate.

WIRING DIAGRAM:

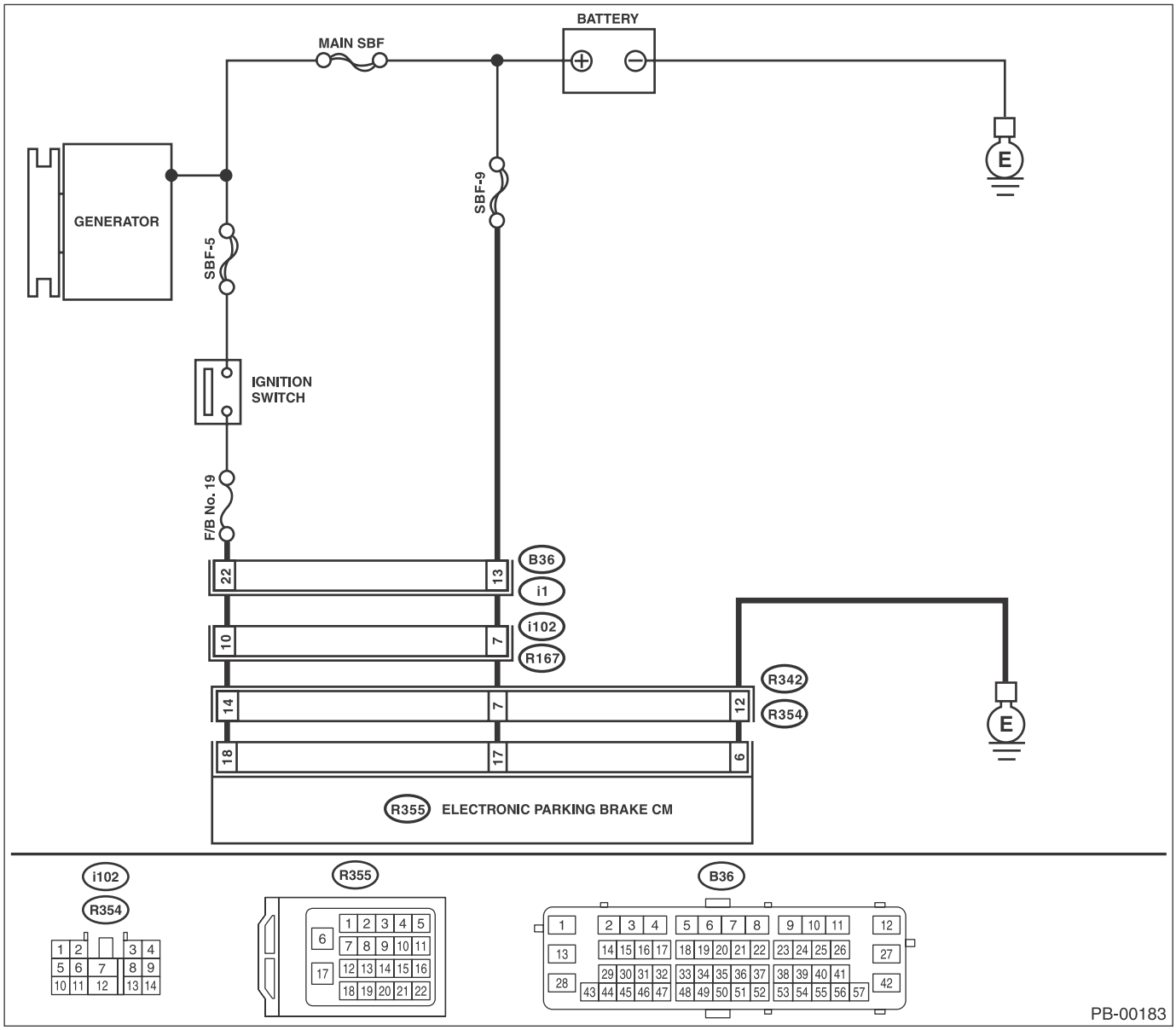

	Step	Check	Yes	No
1	**CHECK INPUT VOLTAGE FOR ELECTRONIC PARKING BRAKE CM.** 1) Turn the ignition switch to OFF. 2) Disconnect the connectors from the electronic parking brake CM. 3) Turn the ignition switch to ON. 4) Measure the voltage between electronic parking brake CM connector and chassis ground. ***Connector & terminal*** ***(R355) No. 18 (+) — Chassis ground (–):*** ***(R355) No. 17 (+) — Chassis ground (–):***	Is the voltage 10 — 15 V?	Go to step **2**.	Repair the power supply circuit.
2	**CHECK GROUND CIRCUIT OF ELECTRONIC PARKING BRAKE CM.** 1) Turn the ignition switch to OFF. 2) Measure the resistance between electronic parking brake CM connector and chassis ground. ***Connector & terminal*** ***(R355) No. 6 — Chassis ground:***	Is the resistance less than 10 Ω?	Go to step **3**.	Repair the defective ground circuit of the electronic parking brake CM.
3	**CHECK POOR CONTACT OF CONNECTORS.**	Is there poor contact of power supply circuit, ground circuit and electronic parking brake CM connector?	Repair the connector.	Go to step **4**.
4	**CHECK ELECTRONIC PARKING BRAKE CM.** 1) Connect all connectors. 2) Clear the memory. <Ref. to PB(diag)-24, Clear Memory Mode.> 3) Perform the Inspection Mode. <Ref. to PB(diag)-23, Inspection Mode.> 4) Release the parking brake, and then operate again. 5) Read the DTC.	Is the same DTC displayed?	Replace the electronic parking brake CM. <Ref. to PB-5, Parking Brake Actuator.>	Go to step **5**.
5	**CHECK OTHER DTC DETECTION.**	Is any other DTC displayed?	Perform the diagnosis according to DTC.	It results from a temporary poor contact interference.

M: DTC C0252 MOTOR MALFUNCTION

NOTE:
• For the diagnostic procedure, refer to DTC C0251 “Actuator Line (abnormal)”. <Ref. to PB(diag)-50, DTC C0251 ACTUATOR LINE (ABNORMAL), Diagnostic Procedure with Diagnostic Trouble Code (DTC).>
• When the operation and release of the parking brake is repeated excessively, this DTC may be stored.

N: DTC C0253 ACTUATOR STROKE EXCESS

DTC DETECTING CONDITION:
Actuator stroke too long
TROUBLE SYMPTOM:
- Brake warning light blinks.
- Electronic parking brake warning light illuminates. (C6 model)
- Parking brake system does not operate.

	Step	Check	Yes	No
1	**CHECK PARKING BRAKE ASSEMBLY.** Check the parking brake cable connection of parking brake assembly.	Is there any trouble with the parking brake shoe lever or the parking brake cable connection?	Repair the parking brake cable connection. Go to step **2**.	Go to step **2**.
2	**CHECK PARKING BRAKE ASSEMBLY.** Check the parking brake assembly disc rotor and shoe assembly. <Ref. to PB-8, INSPECTION, Parking Brake Assembly (Rear Disc Brake).>	Are the disc rotor and shoe assembly normal?	Adjust the shoe clearance of the parking brake assembly. <Ref. to PB-8, ADJUSTMENT, Parking Brake Assembly (Rear Disc Brake).> Go to step **3**.	Replace the defective parts, and adjust the shoe clearance of the parking brake assembly. <Ref. to PB-8, ADJUSTMENT, Parking Brake Assembly (Rear Disc Brake).> Go to step **3**.
3	**PERFORM CALIBRATION OF FORCE SENSOR USING SUBARU SELECT MONITOR.** 1) Perform calibration of force sensor using the Subaru Select Monitor. <Ref. to PB(diag)-17, FORCE SENSOR CALIBRATION MODE, OPERATION, Subaru Select Monitor.> 2) Clear the memory. <Ref. to PB(diag)-24, Clear Memory Mode.> 3) Read the DTC.	Is the same DTC displayed?	Replace the electronic parking brake CM. <Ref. to PB-5, Parking Brake Actuator.>	It results from poor adjustment of the shoe clearance.

O: DTC C0261 IMPROPER CAN COMMUNICATION

DTC DETECTING CONDITION:
Defective CAN communication
TROUBLE SYMPTOM:
- Electronic parking brake warning light illuminates. (C6 model)
- Brake warning light blinks. (Models other than C6 model)
- Parking brake system does not operate.

NOTE:
Refer to LAN section for diagnostic procedure. <Ref. to LAN(diag)-2, Basic Diagnostic Procedure.>

P: DTC C0262 TCM COMMUNICATION CIRCUIT

DTC DETECTING CONDITION:

No CAN signal received from transmission control module (TCM).

TROUBLE SYMPTOM:

- Electronic parking brake warning light illuminates. (C6 model)
- Brake warning light blinks. (Models other than C6 model)
- Hill hold function and accelerator interlocking release function do not operate.

	Step	Check	Yes	No
1	**CHECK AT SYSTEM OR CVT SYSTEM.** 1) Start the engine. 2) Check the DTC in AT system or CVT system.	Is DTC of AT system or CVT system displayed?	Perform the diagnosis according to DTC of AT system or CVT system. <Ref. to 5AT(diag)-33, List of Diagnostic Trouble Code (DTC).> <Ref. to CVT(diag)-32, List of Diagnostic Trouble Code (DTC).>	Go to step **2**.
2	**CHECK LAN SYSTEM.** Check the DTC in LAN system. <Ref. to LAN(diag)-10, OPERATION, Read Diagnostic Trouble Code (DTC).>	Is there any fault in LAN system?	Perform the diagnosis according to DTC for LAN system. <Ref. to LAN(diag)-31, List of Diagnostic Trouble Code (DTC).>	Go to step **3**.
3	**CHECK ELECTRONIC PARKING BRAKE CM.** 1) Connect all connectors. 2) Clear the memory. <Ref. to PB(diag)-24, Clear Memory Mode.> 3) Perform the Inspection Mode. <Ref. to PB(diag)-23, Inspection Mode.> 4) Read the DTC.	Is the same DTC displayed?	Replace the electronic parking brake CM. <Ref. to PB-5, Parking Brake Actuator.>	Go to step **4**.
4	**CHECK OTHER DTC DETECTION.**	Is any other DTC displayed?	Perform the diagnosis according to DTC.	It results from a temporary noise interference.

Q: DTC C0263 ECM COMMUNICATION CIRCUIT

DTC DETECTING CONDITION:

No CAN signal received from engine control module (ECM).

TROUBLE SYMPTOM:

- Electronic parking brake warning light illuminates. (C6 model)
- Brake warning light blinks. (Models other than C6 model)
- Hill hold function and accelerator interlocking release function do not operate.

	Step	Check	Yes	No
1	**CHECK ECM.** 1) Start the engine. 2) Check DTC of ECM.	Is DTC of ECM displayed?	Perform the diagnosis according to DTC of ECM.	Go to step **2**.
2	**CHECK LAN SYSTEM.** Check the DTC in LAN system. <Ref. to LAN(diag)-10, OPERATION, Read Diagnostic Trouble Code (DTC).>	Is there any fault in LAN system?	Perform the diagnosis according to DTC for LAN system. <Ref. to LAN(diag)-31, List of Diagnostic Trouble Code (DTC).>	Go to step **3**.
3	**CHECK ELECTRONIC PARKING BRAKE CM.** 1) Connect all connectors. 2) Clear the memory. <Ref. to PB(diag)-24, Clear Memory Mode.> 3) Perform the Inspection Mode. <Ref. to PB(diag)-23, Inspection Mode.> 4) Read the DTC.	Is the same DTC displayed?	Replace the electronic parking brake CM. <Ref. to PB-5, Parking Brake Actuator.>	Go to step **4**.
4	**CHECK OTHER DTC DETECTION.**	Is any other DTC displayed?	Perform the diagnosis according to DTC.	It results from a temporary noise interference.

R: DTC C0264 VDC COMMUNICATION SYSTEM

DTC DETECTING CONDITION:

No CAN signal received from VDC control module.

TROUBLE SYMPTOM:

- Electronic parking brake warning light illuminates. (C6 model)
- Brake warning light blinks. (Models other than C6 model)
- Parking brake system does not operate.

	Step	Check	Yes	No
1	**CHECK VDC SYSTEM.** 1) Start the engine. 2) Check the DTC in VDC system. <Ref. to VDC(diag)-23, OPERATION, Read Diagnostic Trouble Code (DTC).>	Is DTC of VDC system displayed?	Perform the diagnosis according to DTC of VDC system. <Ref. to VDC(diag)-35, List of Diagnostic Trouble Code (DTC).>	Go to step **2**.
2	**CHECK LAN SYSTEM.** Check the DTC in LAN system. <Ref. to LAN(diag)-10, OPERATION, Read Diagnostic Trouble Code (DTC).>	Is there any fault in LAN system?	Perform the diagnosis according to DTC for LAN system. <Ref. to LAN(diag)-31, List of Diagnostic Trouble Code (DTC).>	Go to step **3**.
3	**CHECK ELECTRONIC PARKING BRAKE CM.** 1) Connect all connectors. 2) Clear the memory. <Ref. to PB(diag)-24, Clear Memory Mode.> 3) Perform the Inspection Mode. <Ref. to PB(diag)-23, Inspection Mode.> 4) Read the DTC.	Is the same DTC displayed?	Replace the electronic parking brake CM. <Ref. to PB-5, Parking Brake Actuator.>	Go to step **4**.
4	**CHECK OTHER DTC DETECTION.**	Is any other DTC displayed?	Perform the diagnosis according to DTC.	It results from a temporary noise interference.

S: DTC C0265 BODY INTEGRATED MODULE COMMUNICATION CIRCUIT

DTC DETECTING CONDITION:

No CAN signal received from body integrated unit.

TROUBLE SYMPTOM:

- Electronic parking brake warning light illuminates. (C6 model)
- Brake warning light blinks. (Models other than C6 model)
- Hill hold function and accelerator interlocking release function do not operate.

	Step	Check	Yes	No
1	**CHECK BODY INTEGRATED UNIT.** 1) Start the engine. 2) Check DTC of body integrated unit. <Ref. to BC(diag)-11, OPERATION, Read Diagnostic Trouble Code (DTC).>	Is DTC of the body integrated unit displayed?	Perform the diagnosis according to DTC for the body integrated unit. <Ref. to BC(diag)-24, List of Diagnostic Trouble Code (DTC).>	Go to step **2**.
2	**CHECK ELECTRONIC PARKING BRAKE CM.** 1) Connect all connectors. 2) Clear the memory. <Ref. to PB(diag)-24, Clear Memory Mode.> 3) Perform the Inspection Mode. <Ref. to PB(diag)-23, Inspection Mode.> 4) Read the DTC.	Is the same DTC displayed?	Replace the electronic parking brake CM. <Ref. to PB-5, Parking Brake Actuator.>	Go to step **3**.
3	**CHECK OTHER DTC DETECTION.**	Is any other DTC displayed?	Perform the diagnosis according to DTC.	It results from a temporary noise interference.

T: DTC C0267 METER COMMUNICATION SYSTEM

DTC DETECTING CONDITION:
No CAN signal received from combination meter.
TROUBLE SYMPTOM:
- Electronic parking brake warning light illuminates. (C6 model)
- Brake warning light blinks. (Models other than C6 model)
- Hill hold function and accelerator interlocking release function do not operate.

	Step	Check	Yes	No
1	**CHECK COMBINATION METER.** Check the DTC of combination meter. <Ref. to IDI-8, DTC DISPLAY MODE, OPERATION, Combination Meter System.>	Is DTC of combination meter displayed?	Perform the diagnosis according to DTC of the combination meter. <Ref. to IDI-8, DTC DISPLAY MODE, OPERATION, Combination Meter System.>	Go to step **2**.
2	**CHECK LAN SYSTEM.** Check the DTC in LAN system. <Ref. to LAN(diag)-10, OPERATION, Read Diagnostic Trouble Code (DTC).>	Is there any fault in LAN system?	Perform the diagnosis according to DTC for LAN system. <Ref. to LAN(diag)-31, List of Diagnostic Trouble Code (DTC).>	Go to step **3**.
3	**CHECK ELECTRONIC PARKING BRAKE CM.** 1) Connect all connectors. 2) Clear the memory. <Ref. to PB(diag)-24, Clear Memory Mode.> 3) Perform the Inspection Mode. <Ref. to PB(diag)-23, Inspection Mode.> 4) Read the DTC.	Is the same DTC displayed?	Replace the electronic parking brake CM. <Ref. to PB-5, Parking Brake Actuator.>	Go to step **4**.
4	**CHECK OTHER DTC DETECTION.**	Is any other DTC displayed?	Perform the diagnosis according to DTC.	It results from a temporary noise interference.

U: DTC C0271 FORCE SENSOR LINE (ABNORMAL)

NOTE:
For the diagnostic procedure, refer to DTC C0251 “Actuator Line (abnormal)”. <Ref. to PB(diag)-50, DTC C0251 ACTUATOR LINE (ABNORMAL), Diagnostic Procedure with Diagnostic Trouble Code (DTC).>

V: DTC C0272 TEMPERATURE SENSOR LINE (ABNORMAL)

NOTE:
- For the diagnostic procedure, refer to DTC C0251 “Actuator Line (abnormal)”. <Ref. to PB(diag)-50, DTC C0251 ACTUATOR LINE (ABNORMAL), Diagnostic Procedure with Diagnostic Trouble Code (DTC).>
- When the operation and release of the parking brake is repeated excessively, this DTC may be stored.

W: DTC C0273 STROKE SENSOR LINE (ABNORMAL)

NOTE:
For the diagnostic procedure, refer to DTC C0251 “Actuator Line (abnormal)”. <Ref. to PB(diag)-50, DTC C0251 ACTUATOR LINE (ABNORMAL), Diagnostic Procedure with Diagnostic Trouble Code (DTC).>

X: DTC C0274 CLUTCH SENSOR CIRCUIT

DTC DETECTING CONDITION:

- Defective clutch stroke sensor
- Defective harness connector

TROUBLE SYMPTOM:

- Electronic parking brake warning light illuminates. (C6 model)
- Brake warning light blinks. (Models other than C6 model)
- Hill hold function and accelerator interlocking release function do not operate.
- Parking brake is not released even after depressing the clutch pedal to release the parking brake switch.

WIRING DIAGRAM:

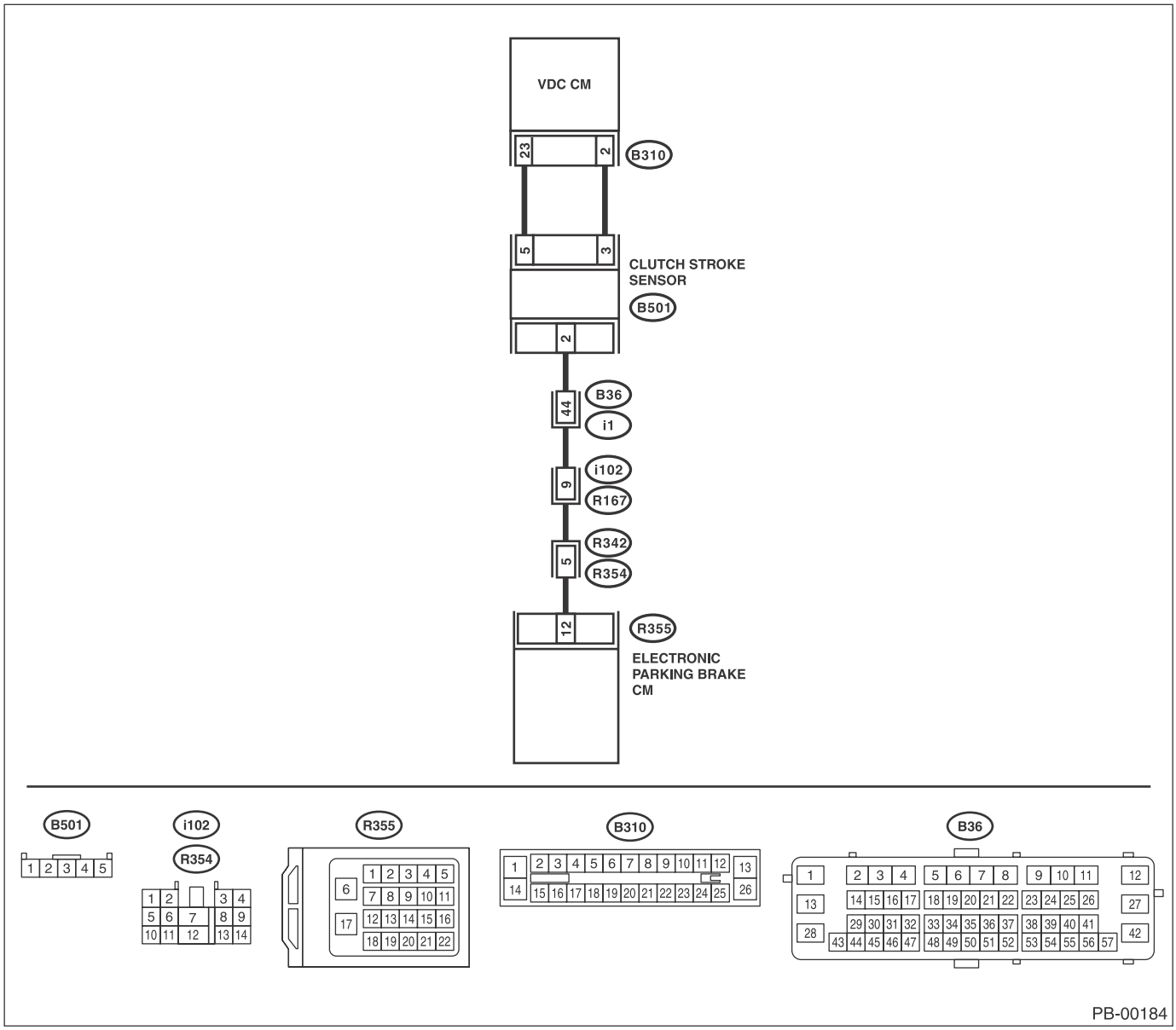

	Step	Check	Yes	No
1	**PERFORM CALIBRATION OF CLUTCH SENSOR USING SUBARU SELECT MONITOR.** 1) Select “Maintenance Operation Mode” on Subaru Select Monitor. 2) Perform the Clutch Sensor Calibration Mode. <Ref. to PB(diag)-19, CLUTCH SENSOR CALIBRATION MODE, OPERATION, Subaru Select Monitor.> 3) Clear the memory. <Ref. to PB(diag)-24, Clear Memory Mode.> 4) Perform the Inspection Mode. <Ref. to PB(diag)-23, Inspection Mode.> 5) Read the DTC.	Is the same DTC displayed?	Go to step **2**.	It results from poor calibration of the clutch stroke sensor.
2	**CHECK OUTPUT OF CLUTCH STROKE SENSOR USING SUBARU SELECT MONITOR.** 1) Select {Current Data Display & Save} in Subaru Select Monitor. <Ref. to PB(diag)-14, Subaru Select Monitor.> 2) Read the clutch stroke sensor output displayed on the screen.	When the clutch pedal is operated, does the stroke sensor output value displayed on the screen change in accordance with the clutch pedal?	Go to step **11**.	Go to step **3**.
3	**CHECK HARNESS.** 1) Turn the ignition switch to OFF. 2) Disconnect the connector from clutch stroke sensor. 3) Turn the ignition switch to ON. 4) Measure the voltage between clutch stroke sensor connector terminals. ***Connector & terminal*** ***(B501) No. 3 (+) — (B501) No. 5 (–):***	Is the voltage 5 V or more?	Go to step **7**.	Go to step **4**.
4	**CHECK HARNESS.** 1) Turn the ignition switch to OFF. 2) Disconnect the connector from VDCCM. 3) Measure the resistance of harness between clutch stroke sensor and VDCCM connector. ***Connector & terminal*** ***(B501) No. 3 — (B310) No. 2:*** ***(B501) No. 5 — (B310) No. 23:***	Is the resistance less than 1 Ω?	Go to step **5**.	Repair the harness and connector between clutch stroke sensor and VDCCM connector.
5	**CHECK HARNESS.** Measure the resistance of harness between clutch stroke sensor and chassis ground. ***Connector & terminal*** ***(B501) No. 3 — Chassis ground:*** ***(B501) No. 5 — Chassis ground:***	Is the resistance 1 MΩ or more?	Go to step **6**.	Repair the ground short of harness between clutch stroke sensor and VDCCM connector.
6	**CHECK HARNESS.** Measure the voltage between clutch stroke sensor and chassis ground. ***Connector & terminal*** ***(B501) No. 3 (+) — Chassis ground (–):*** ***(B501) No. 5 (+) — Chassis ground (–):***	Is the voltage less than 1 V?	Check DTC of VDC. <Ref. to VDC(diag)-23, Read Diagnostic Trouble Code (DTC).>	Repair short to power supply of harness between clutch stroke sensor and VDCCM connector.
7	**CHECK HARNESS.** 1) Disconnect the connectors from the electronic parking brake CM. 2) Measure the resistance of harness between clutch stroke sensor and electronic parking brake CM connector. ***Connector & terminal*** ***(B501) No. 4 — (B355) No. 12:***	Is the resistance less than 1 Ω?	Go to step **8**.	Repair the harness and connector between clutch stroke sensor and electronic parking brake CM connector.

	Step	Check	Yes	No
8	**CHECK HARNESS.** Measure the resistance of harness between clutch stroke sensor and chassis ground. ***Connector & terminal*** ***(B501) No. 4 — Chassis ground:***	Is the resistance 1 MΩ or more?	Go to step **9**.	Repair ground short of harness between clutch stroke sensor and electronic parking brake CM connector.
9	**CHECK HARNESS.** Measure the voltage between clutch stroke sensor and chassis ground. ***Connector & terminal*** ***(B501) No. 4 (+) — Chassis ground (–):***	Is the voltage less than 1 V?	Go to step **10**.	Repair short to power supply of harness between clutch stroke sensor and electronic parking brake CM connector.
10	**CHECK CLUTCH STROKE SENSOR OUTPUT.** 1) Connect all connectors. 2) Turn the ignition switch to ON. 3) Using an oscilloscope, check clutch stroke sensor output. ***Connector & terminal*** ***(B501) No. 4 (+) — Chassis ground (–):***	Is there any output?	Go to step **11**.	Replace the clutch master cylinder. <Ref. to CL-20, Master Cylinder.>
11	**CHECK ELECTRONIC PARKING BRAKE CM.** 1) Connect all connectors. 2) Clear the memory. <Ref. to PB(diag)-24, Clear Memory Mode.> 3) Perform the Inspection Mode. <Ref. to PB(diag)-23, Inspection Mode.> 4) Read the DTC.	Is the same DTC displayed?	Replace the electronic parking brake CM. <Ref. to PB-5, Parking Brake Actuator.>	Go to step **12**.
12	**CHECK OTHER DTC DETECTION.**	Is any other DTC displayed?	Perform the diagnosis according to DTC.	It results from a temporary poor contact interference.

Y: DTC C0275 LONGITUDINAL G SENSOR CIRCUIT

DTC DETECTING CONDITION:

- Defective longitudinal G sensor
- Defective harness connector

TROUBLE SYMPTOM:

- Electronic parking brake warning light illuminates. (C6 model)
- Brake warning light blinks. (Models other than C6 model)
- Hill hold function and accelerator interlocking release function do not operate.

	Step	Check	Yes	No
1	**CHECK INSTALLATION OF VDCCM&H/U.**	Is VDCCM&H/U installed properly without being tilted? Is the bracket deformation-free? Are the VDCCM&H/U installation bolts installed without missing or getting loose?	Go to step **2**.	Repair the fault location. Go to step **2**. • Install VDCCM&H/U properly. • Replace the bracket if faulty. • Tighten the VDCCM&H/U installation bolt. <Ref. to VDC-5, VDC CONTROL MODULE & HYDRAULIC CONTROL UNIT (VDCCM&H/U), COMPONENT, General Description.>
2	**CHECK LONGITUDINAL G SENSOR OUTPUT.** 1) Park the vehicle on a level surface. 2) Connect Subaru Select Monitor, and select "VDC" and then "Current Data Display & Save". 3) Read the longitudinal G sensor output displayed on the screen.	Is the indicated reading of the longitudinal G sensor on the monitor display –2 — 2 m/s^2?	Go to step **3**.	Go to step **6**.
3	**SET 0 POINT FOR LONGITUDINAL G SENSOR.** 1) Select "VDC", and then "Function Check Sequence". 2) Perform the "Longitudinal G sensor & lateral G sensor 0 point setting mode". <Ref. to VDC-11, LONGITUDINAL G SENSOR & LATERAL G SENSOR 0 POINT SETTING MODE, ADJUSTMENT, VDC Control Module and Hydraulic Control Unit (VDCCM&H/U).>	Is the 0 point setting successful?	Go to step **4**.	Replace the VDCCM&H/U. <Ref. to VDC-7, VDC Control Module and Hydraulic Control Unit (VDCCM&H/U).>
4	**PERFORM DRIVING TEST.** Drive the vehicle approximately 10 minutes, and check if the warning lights illuminate/blink or improperly operate during driving. In a safe place, drive the vehicle while alternating acceleration and deceleration as much as possible.	Does the electronic parking brake warning light remain off without blinking? (C6 model) Does the brake warning light remain off? (Models other than C6 model) Does the parking brake operate without malfunction?	Go to step **5**.	When the warning lights illuminate/blink or improperly operate, replace the electronic parking CM. <Ref. to PB-5, Parking Brake Actuator.>

	Step	Check	Yes	No
5	**CHECK LONGITUDINAL G SENSOR OUTPUT.** 1) Park the vehicle on a level surface. 2) Connect Subaru Select Monitor, and select "VDC" and then "Current Data Display & Save". 3) Read the longitudinal G sensor output displayed on the screen.	Is the indicated reading of the longitudinal G sensor on the monitor display –1.5 — 1.5 m/s^2?	It results from a temporary noise interference.	Replace the VDCCM&H/U. <Ref. to VDC-7, VDC Control Module and Hydraulic Control Unit (VDCCM&H/U).>
6	**CHECK LONGITUDINAL G SENSOR OUTPUT.** 1) Remove the VDCCM&H/U installation bolt and bracket. 2) Keep VDCCM&H/U in a horizontal position. 3) Connect Subaru Select Monitor, and select "VDC" and then "Current Data Display & Save". 4) Read the longitudinal G sensor output displayed on the screen.	When the VDCCM&H/U is in a horizontal position, is the indicated reading of the longitudinal G sensor on the monitor display –1.5 — 1.5 m/s^2?	Check the bracket and brake pipe, and install VDCCM&H/U in a horizontal position to the vehicle.	Replace the VDCCM&H/U. <Ref. to VDC-7, VDC Control Module and Hydraulic Control Unit (VDCCM&H/U).>

Z: DTC C0281 MID STOP CONDITION

DTC DETECTING CONDITION:
Actuator stops in the mid-stroke
TROUBLE SYMPTOM:
Brake warning light blinks.

NOTE:
• When the actuator stops in the mid-stroke due to power supply error (ex. voltage drop during cranking) during the operation, this DTC is stored. If the actuator operates normally after operating and then releasing the parking brake again, this is not malfunction.
• When being restored from the mid-stroke stop state, the actuator will have full-stroke once, and therefore, operation time may take approximately 10 seconds.

	Step	Check	Yes	No
1	**CHECK ELECTRONIC PARKING BRAKE CM USING SUBARU SELECT MONITOR.** 1) Turn the ignition switch to ON. 2) Release the parking brake. 3) Approximately 10 seconds after releasing the parking brake, clear the memory using the Subaru Select Monitor. <Ref. to PB(diag)-24, Clear Memory Mode.> 4) Read the DTC.	Is DTC displayed?	Perform the diagnosis according to DTC. <Ref. to PB(diag)-34, List of Diagnostic Trouble Code (DTC).>	It results from a temporary voltage drop.

AA:DTC C0282 EMERGENCY CANCEL STATUS

DTC DETECTING CONDITION:
Emergency release (manual release) of the parking brake was performed.
TROUBLE SYMPTOM:
Brake warning light blinks.

NOTE:
• When emergency release of the parking brake is performed, this DTC is stored. If the actuator operates normally after operating and then releasing the parking brake following the emergency release, this is not malfunction. When the actuator operates normally, the brake warning light goes off.
• When being restored from emergency release state, the actuator will have full-stroke once, and therefore, operation time may take approximately 10 seconds.
• When emergency release is performed, check the electronic parking brake control module and brake shoe. For details, refer to the restoring procedures after emergency release. <Ref. to PB-10, INSPECTION, Emergency Release of Electronic Parking Brake.>

	Step	Check	Yes	No
1	**INTERVIEW CUSTOMERS.** Ask the user if emergency release was performed.	Was the emergency release performed?	Go to step **2**.	Go to step **3**.
2	**CHECK ELECTRONIC PARKING BRAKE CM.** 1) Turn the ignition switch to ON, and then release the parking brake. 2) After approximately 10 seconds, clear the memory using the Subaru Select Monitor. <Ref. to PB(diag)-24, Clear Memory Mode.> 3) Perform the Inspection Mode. <Ref. to PB(diag)-23, Inspection Mode.> 4) Read the DTC.	Is DTC displayed?	Perform the diagnosis according to DTC. <Ref. to PB(diag)-34, List of Diagnostic Trouble Code (DTC).>	End.
3	**CHECK PARKING BRAKE ASSEMBLY.** Check that the parking brake assembly does not have malfunction. <Ref. to PB-10, INSPECTION, Emergency Release of Electronic Parking Brake.>	Is the parking brake assembly free of malfunction?	Replace the electronic parking brake CM. <Ref. to PB-5, Parking Brake Actuator.>	Repair the parking brake assembly.

13.General Diagnostic Table

A: INSPECTION

Symptoms		Malfunction parts/Condition
• Electronic parking brake warning light illuminates. (C6 model) • Brake warning light blinks. (Models other than C6 model)	Parking brake system does not operate.	• Defective parking brake switch • Defective electronic parking brake CM • Defective power supply/ground for electronic parking brake CM • No CAN signal received from VDC control module • Defective actuator in the electronic parking brake CM • Defective force sensor in the electronic parking brake CM • Defective temperature sensor in the electronic parking brake CM • Defective stroke sensor in the electronic parking brake CM • Defective CAN communication
• Electronic parking brake warning light illuminates. (C6 model) • Brake warning light blinks. (Models other than C6 model)	Hill hold function and accelerator interlocking release function do not operate.	• Defective hill hold switch • Faulty signal received from engine control module • Faulty signal received from transmission control module • Faulty signal received from VDC control module • Defective neutral position switch (MT model only) • Defective back-up light switch (MT model only) • Defective parameter selection for the parking brake control module • No CAN signal received from engine control module • No CAN signal received from transmission control module • No CAN signal received from body integrated unit • Defective clutch stroke sensor (MT model only) • Defective longitudinal G sensor
The brake warning light blinks, and the electronic parking brake warning light (C6 model only) and hill hold indicator light illuminate.	—	No CAN signal from the electronic parking brake CM to combination meter
Only the brake warning light blinks.	—	• Mid-course stop state • Emergency release state • The operation and release of the parking brake was repeated excessively
The brake warning light blinks, and the electronic parking brake warning light (C6 model only) illuminates.	Parking brake system does not operate.	Parking brake shoe clearance too large
When the hill hold function is set to ON, drugging of brake may occur when the vehicle starts to move.	—	Driver's seat belt is not fastened.

POWER ASSISTED SYSTEM (POWER STEERING)

PS

		Page
1.	General Description	2
2.	Steering Wheel	16
3.	Universal Joint	18
4.	Steering Column	20
5.	Steering Gearbox	22
6.	Pipe Assembly	38
7.	Oil Pump	41
8.	Reservoir Tank	46
9.	Power Steering Fluid	47
10.	General Diagnostic Table	48

1. General Description

A: SPECIFICATION

Model			H4 non-turbo model	H6, turbo model
Whole system	Minimum turning radius m (ft)		5.6 (18.4)	
	Steering angle	Inner wheel	225/50R17 tire: 37.4°±1.5° 225/45R18 tire: 37.4°±1.5° 215/50R17 tire: 37.6°±1.5° 205/60R16 tire: 37.6°±1.5° 225/60R17 tire: 38.4°±1.5° 215/70R16 tire: 38.4°±1.5°	
		Outer wheel	225/50R17 tire: 33.0°±1.5° 225/45R18 tire: 33.0°±1.5° 215/50R17 tire: 33.3°±1.5° 205/60R16 tire: 33.3°±1.5° 225/60R17 tire: 34.1°±1.5° 215/70R16 tire: 34.1°±1.5°	
	Steering wheel diameter mm (in)		375 (14.76)	
	Lock-to-lock revolution number		OUTBACK: 3.2 Except for OUTBACK: 2.8	
Gearbox	Type		Rack and Pinion, Integral	
	Backlash		0 (Automatic adjusting)	
	Valve (Power steering system)		Rotary valve	
Pump (Power steering system)	Type		Vane pump	
	Oil tank		Installed on body	
	Specific output cm^3 (cu in)/rev.		8.5 (0.519)	8.5 (0.519)
	Relief pressure kPa (kgf/cm^2, psi)		8,300 — 9,000 (85 — 92, 1,203 — 1,305)	8,900 — 9,600 (91 — 98, 1,290 — 1,392)
	Hydraulic fluid control		Engine speed sensitive	
	Hydraulic fluid ℓ (US qt, Imp qt)		1,000 rpm: 6.5 (6.9, 5.7) 3,000 rpm: 5.4 (5.7, 4.8)	1,000 rpm: 6.8 (7.2, 6) 3,000 rpm: 6.1 (6.4, 5.4)
	RPM range rpm		500 — 9,600	650 — 9,600
	Direction of rotation		Clockwise	
Hydraulic oil (Power steering system)	Capacity ℓ (US qt, Imp qt)	Oil tank	0.2 (0.2, 0.2)	
		Whole system	0.7 (0.7, 0.6)	

Steering wheel	Free play		mm (in)	17 (0.67)
Steering shaft	Clearance between the steering wheel and column cover		mm (in)	2 — 4 (0.08 — 0.16)
Steering gear-box (Power steer-ing system)	Sliding resistance		N (kgf, lbf)	314 (32, 71) or less Difference between right and left sliding resistance: 20%
	Rack shaft play in the radial direction	Right-turn steering	mm (in)	Horizontal play: 0.6 (0.024) or less Vertical play: 0.4 (0.016) or less
		Left-turn steering	mm (in)	0.4 (0.016) or less
	Input shaft play	In radial direction	mm (in)	0.18 (0.0071) or less
		In axial direction	mm (in)	0.27 (0.0106) or less
	Rotation resistance		N (kgf, lbf)	Maximum allowable value: 13 (1.3, 2.9) or less Difference between right and left sliding resistance: 20%
Oil pump (Power steer-ing system)	Pulley shaft	Radial play	mm (in)	0.4 (0.016) or less
		Axial play	mm (in)	0.9 (0.035) or less
	Pulley	Ditch deflection	mm (in)	1.0 (0.039) or less
		Rotation resistance	N (kgf, lbf)	9.22 (0.94, 2.07) or less
	Regular pressure (Unloaded)		kPa (kgf/cm^2, psi)	981 (10, 142) or less
Steering wheel effort (Power steer-ing system)	At standstill with engine idling on paved road		N (kgf, lbf)	29.4 (3.0, 6.6) or less
	At standstill with engine stalled on paved road		N (kgf, lbf)	294.2 (30, 66.2) or less

Recommended power steering fluid
SUBARU ATF or DEXRON III

B: COMPONENT

1. STEERING WHEEL AND COLUMN

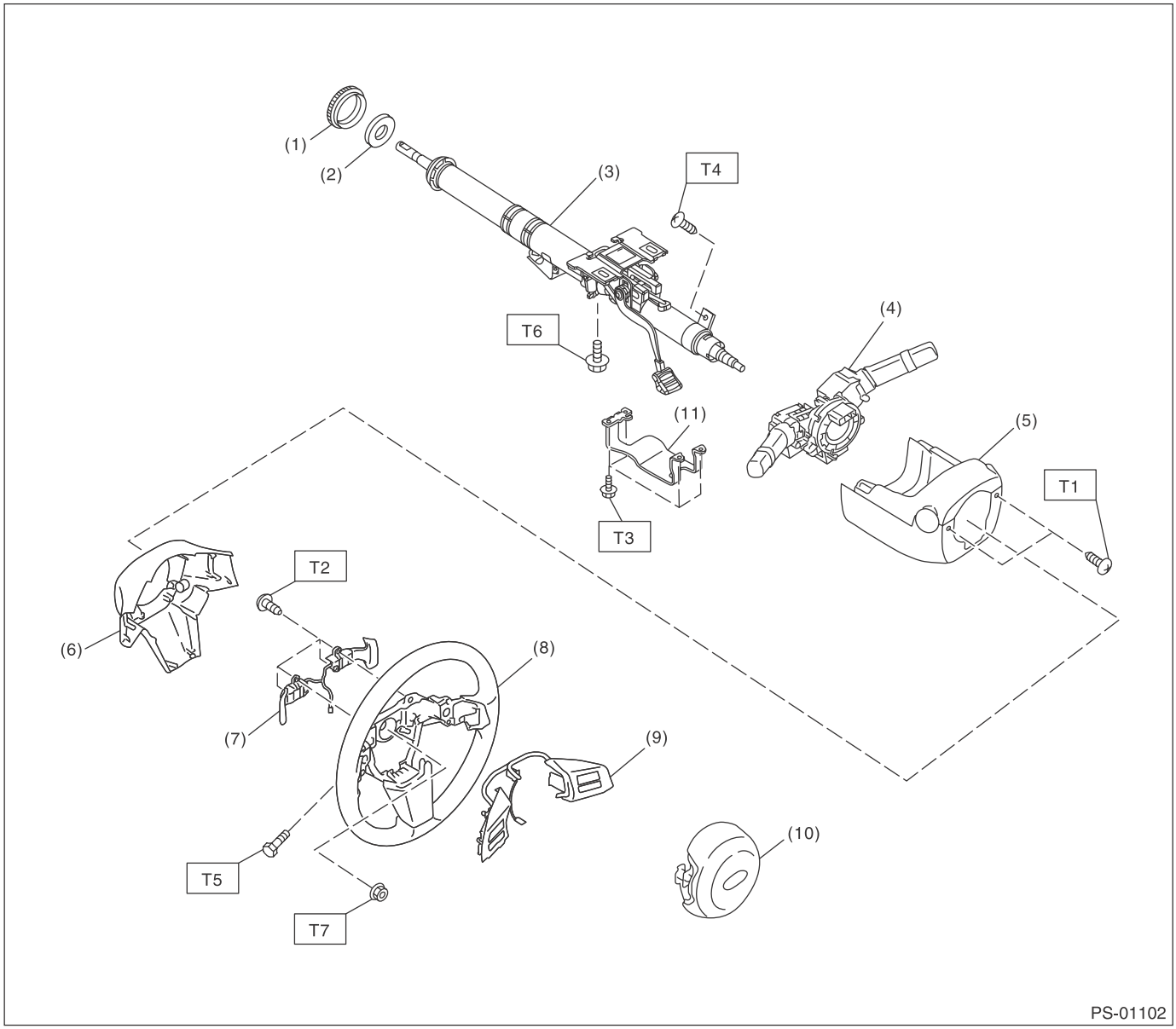

(1)	Bushing	(7)	Paddle shift
(2)	Insulator (CVT model)	(8)	Steering wheel
(3)	Steering shaft	(9)	Switch
(4)	Steering roll connector	(10)	AIRBAG MODULE
(5)	Column cover	(11)	Knee protector
(6)	Steering wheel lower cover		

Tightening torque:N·m (kgf-m, ft-lb)
T1: 1.2 (0.12, 0.9)
T2: 1.7 (0.2, 1.3)
T3: 3.4 (0.3, 2.5)
T4: 3.5 (0.4, 2.6)
T5: 10 (1.0, 7.4)
T6: 20 (2.0, 14.8)
T7: 39 (4.0, 28.8)

2. HOSE AND TANK

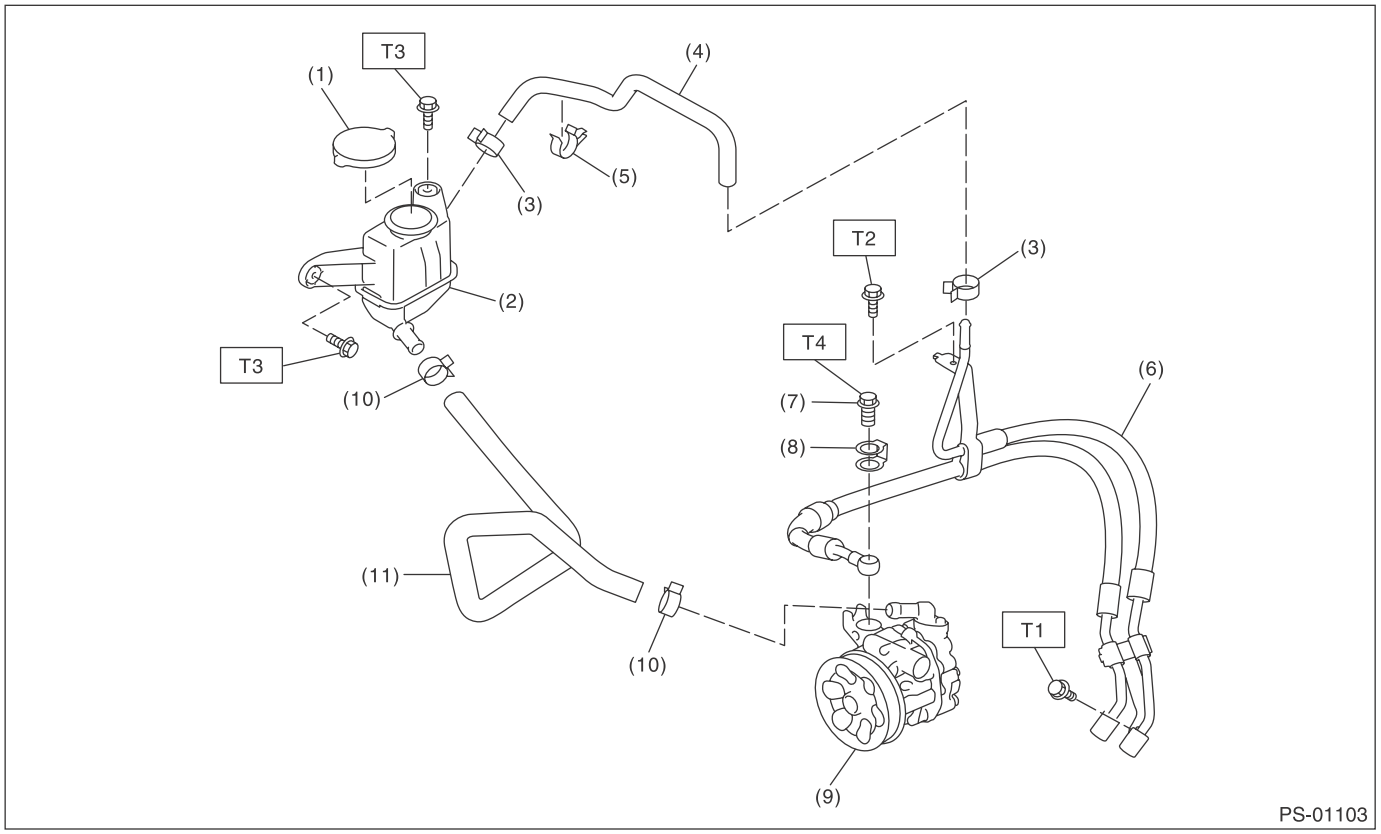

(1)	Cap	(7)	Eye bolt
(2)	Reservoir tank	(8)	Eye bolt gasket
(3)	Clip	(9)	Oil pump
(4)	Return hose	(10)	Clip
(5)	Clip	(11)	Suction hose
(6)	Hose ASSY		

Tightening torque:N·m (kgf-m, ft-lb)
T1: 7.5 (0.76, 5.5)
T2: 10 (1.0, 7.4)
T3: 13 (1.3, 9.6)
T4: 40 (4.1, 29.5)

3. STEERING GEARBOX

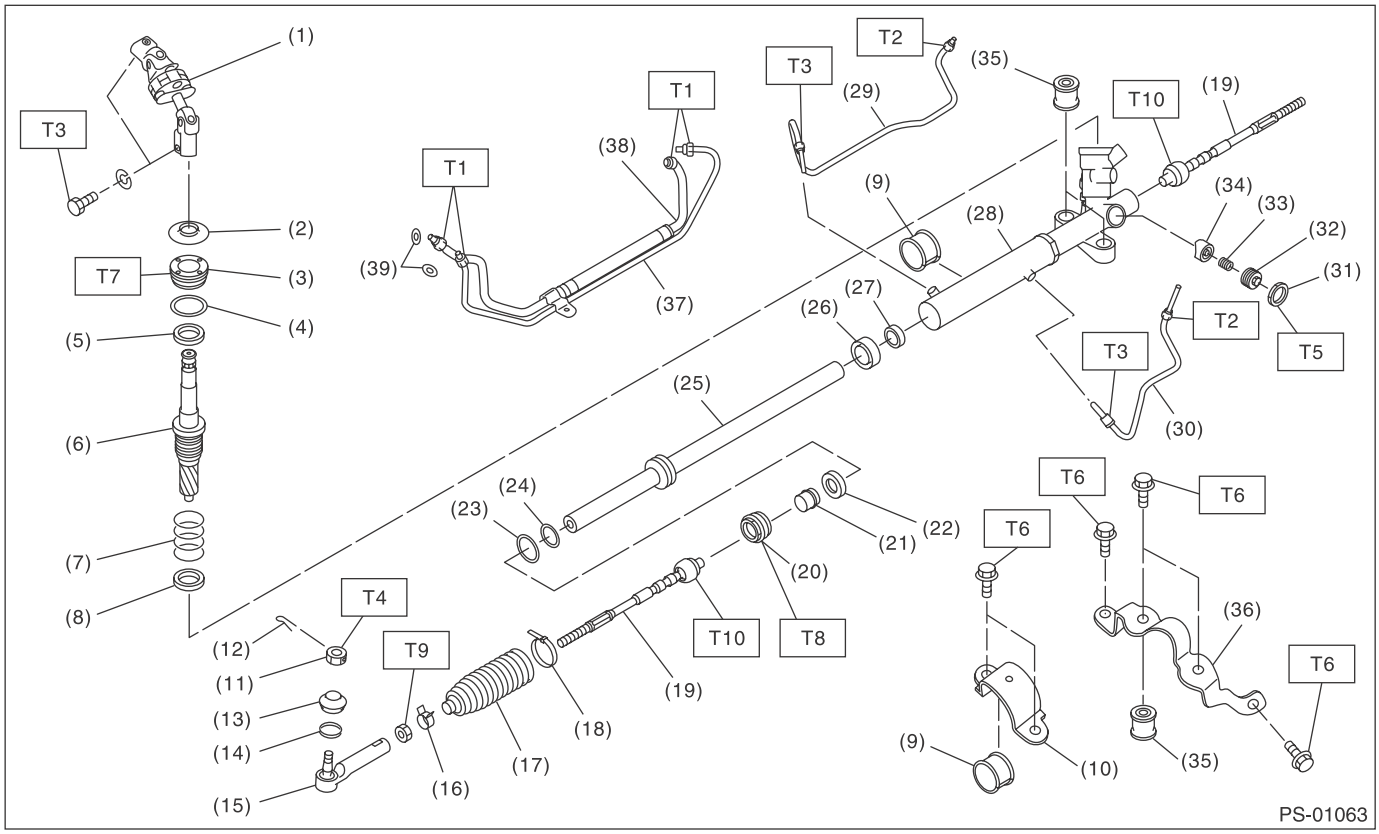

(1) Universal joint
(2) Dust cover
(3) PLUG
(4) O-ring
(5) Oil seal
(6) Control valve
(7) Seal ring
(8) Oil seal
(9) Adapter
(10) Clamp
(11) Castle nut
(12) Cotter pin
(13) Dust seal
(14) Clip
(15) Tie-rod end
(16) Clip
(17) Boot
(18) Band
(19) Tie-rod
(20) HOLDER
(21) Bushing
(22) Oil seal
(23) Seal ring
(24) O-ring
(25) Rack
(26) Oil seal
(27) Back-up washer
(28) Steering body
(29) Pipe A
(30) Pipe B
(31) Lock nut
(32) Adjusting screw
(33) Spring
(34) Sleeve
(35) Bushing
(36) Stiffener
(37) Feed pipe
(38) Return pipe
(39) O-ring

Tightening torque:N·m (kgf-m, ft-lb)
T1: 15 (1.5, 11.1)
T2: 20 (2.0, 14.8)
T3: 24 (2.4, 17.7)
T4: 27 (2.8, 19.9)
T5: 39 (4.0, 28.8)
T6: 60 (6.1, 44.3)
T7: 64 (6.5, 47.2)
T8: 75 (7.6, 55.3)
T9: 85 (8.7, 62.7)
T10: 90 (9.2, 66.4)

4. OIL PUMP

- H4 non-turbo model

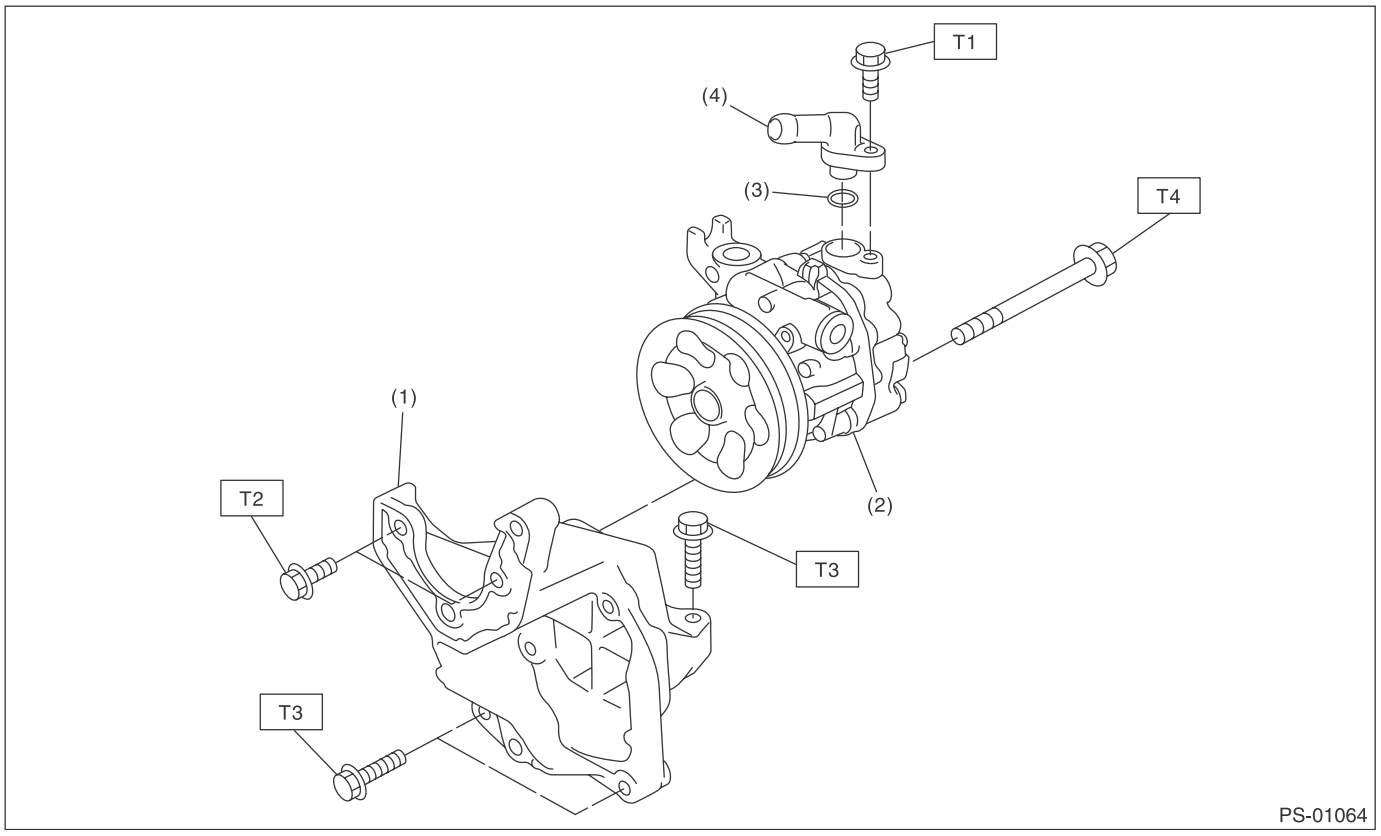

(1) Bracket
(2) Oil pump
(3) O-ring
(4) Joint

Tightening torque:N·m (kgf-m, ft-lb)
T1: 10 (1.0, 7.4)
T2: 16 (1.6, 11.8)
T3: 22 (2.2, 16.2)
T4: 36 (3.7, 26.6)

- H4 turbo model

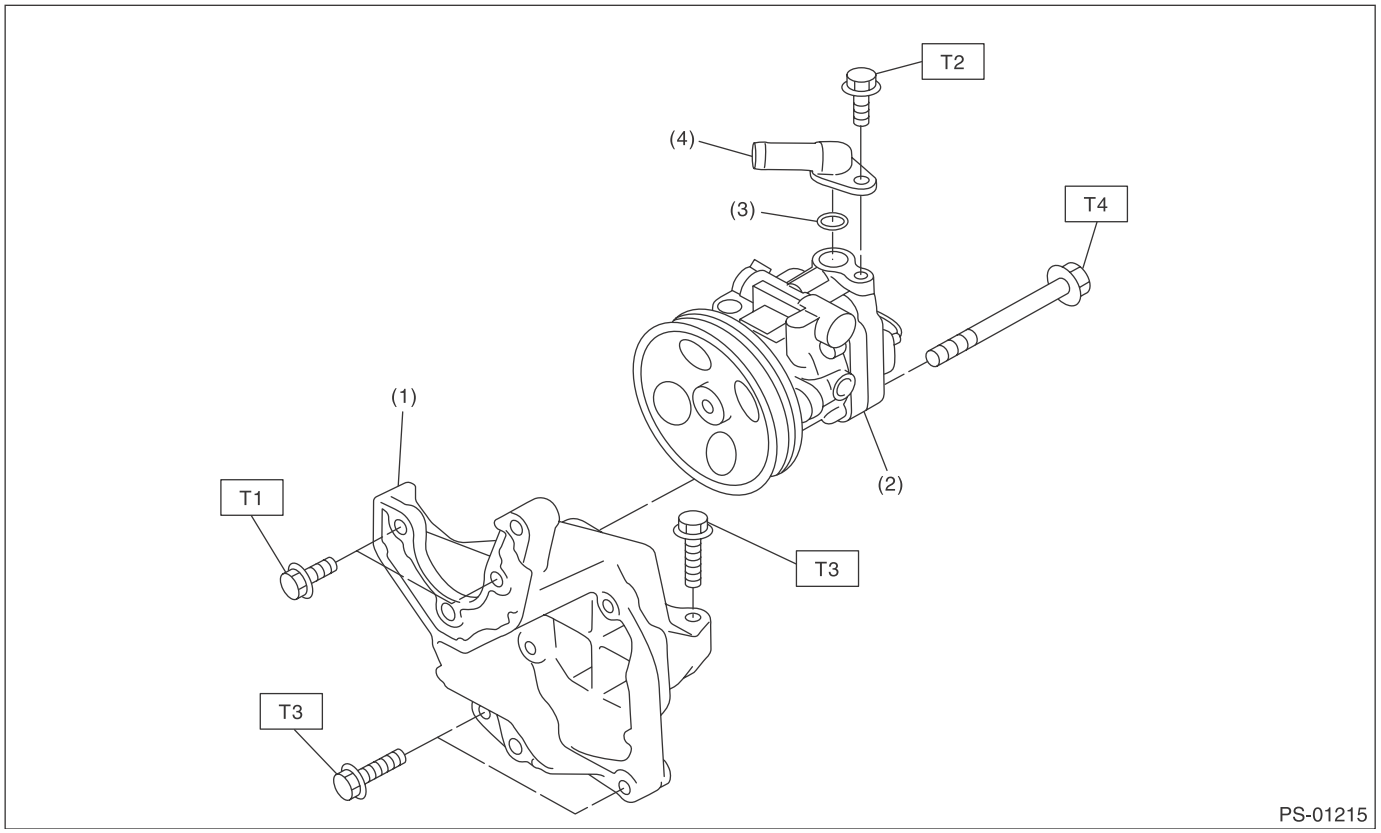

(1) Bracket
(2) Oil pump
(3) O-ring
(4) Joint

Tightening torque:N·m (kgf-m, ft-lb)
T1: 16 (1.6, 11.8)
T2: 21 (2.1, 15.5)
T3: 22 (2.2, 15.9)
T4: 36 (3.7, 26.6)

• H6 model

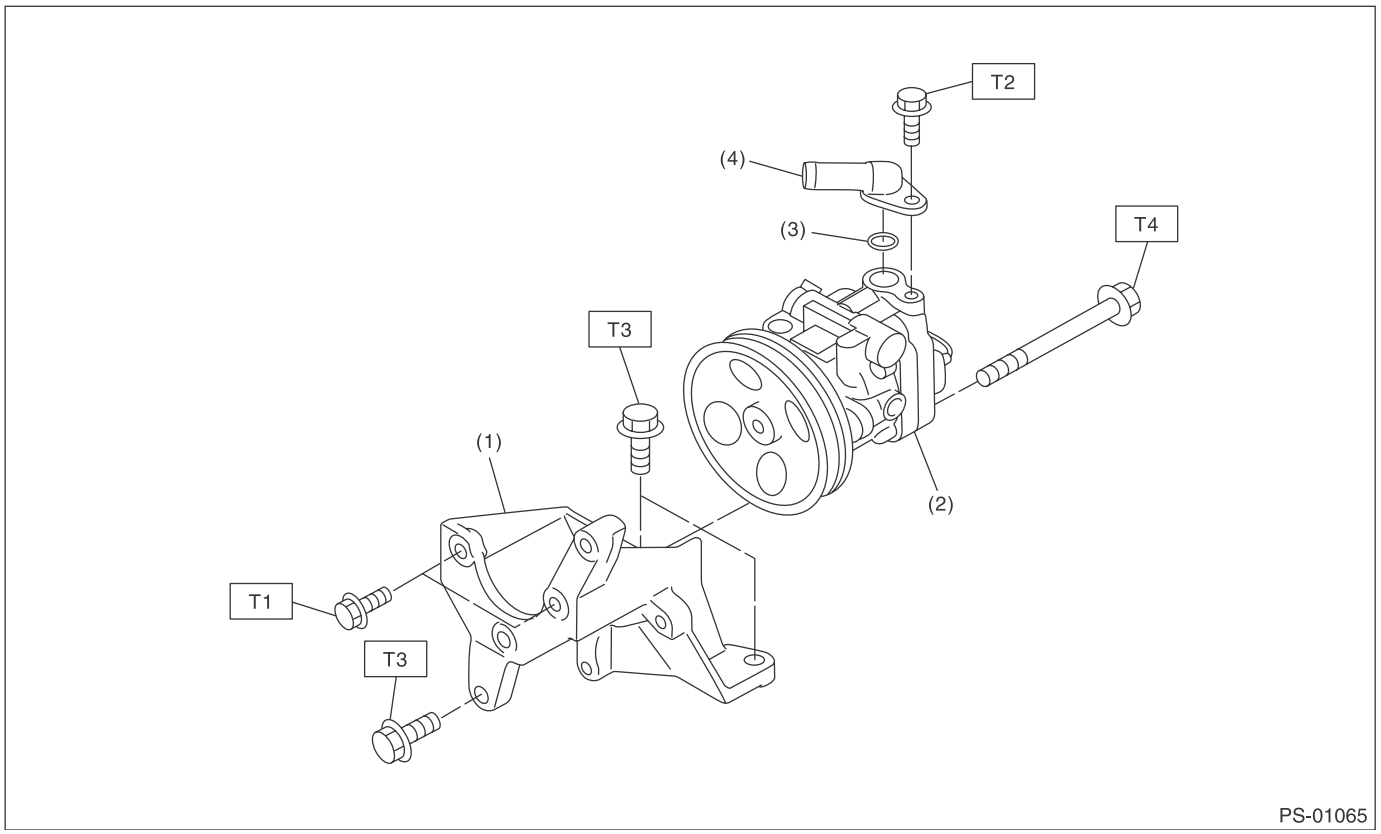

(1) Bracket
(2) Oil pump
(3) O-ring
(4) Joint

Tightening torque:N·m (kgf-m, ft-lb)
T1: 16 (1.6, 11.8)
T2: 21 (2.1, 15.5)
T3: 33 (3.4, 24.3)
T4: 36 (3.7, 26.6)

C: CAUTION

• Wear appropriate work clothing, including a cap, protective goggles and protective shoes when performing any work.
• Before removal, installation or disassembly, be sure to clarify the failure. Avoid unnecessary removal, installation, disassembly and replacement.
• Vehicle components are extremely hot after driving. Be wary of receiving burns from heated parts.
• Use grease and oil of Subaru genuine or the equivalent products. Do not mix them of different grades or manufacturers.
• Be sure to tighten fasteners including bolts and nuts to the specified torque.
• Place shop jacks or rigid racks at the specified points.
• Before securing a part on a vise, place cushioning material such as wooden blocks, aluminum plate or cloth between the part and the vise.

D: PREPARATION TOOL

1. SPECIAL TOOL

ILLUSTRATION	TOOL NUMBER	DESCRIPTION	REMARKS
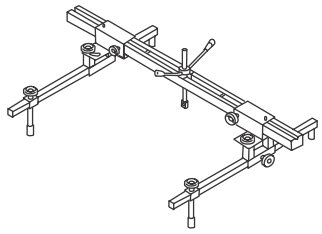 ST99099AJ000	99099AJ000 (Newly adopted tool)	ENGINE HANGER	• Used for hanging power unit. • Used together with CHAIN BALANCER (99099AJ010).
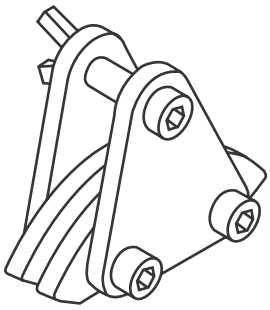 ST99099AJ010	99099AJ010 (Newly adopted tool)	CHAIN BALANCER	• Used for hanging power unit. • Used together with ENGINE HANGER (99099AJ000).
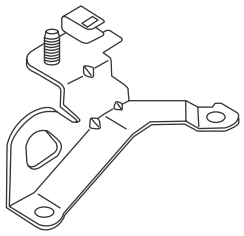 ST10004AA180	10004AA180 (SUBARU genuine part)	HANGER CP ENGINE RR	• Used for hanging power unit. • For H4 non-turbo model. • SUBARU genuine part
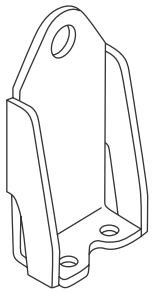 ST18360AA020	18360AA020 (Newly adopted tool)	HANGER	• Used for hanging power unit. • For H6 model.

ILLUSTRATION	TOOL NUMBER	DESCRIPTION	REMARKS
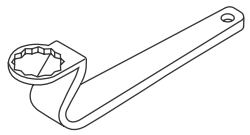 ST34199AJ000	34199AJ000 (Newly adopted tool)	Special tool CPS LHD	Used for adjusting the backlash of gearbox. (lock nut side)
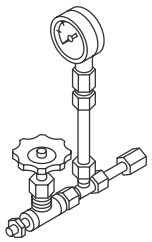 ST-925711000	925711000	PRESSURE GAUGE	Used for measuring oil pressure.
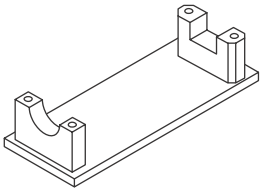 ST-926200000	926200000	STAND	• Used when inspecting characteristic of gear-box assembly and disassembling it. • Used together with BOSS D (34199AG000).
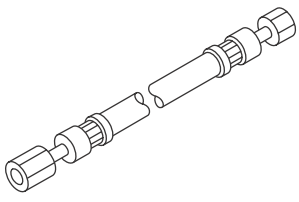 ST34099AC010	34099AC010	ADAPTER HOSE A	Used together with PRESSURE GAUGE (925711000).
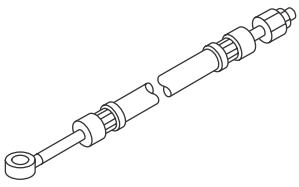 ST34099AC020	34099AC020	ADAPTER HOSE B	Used together with PRESSURE GAUGE (925711000).

ILLUSTRATION	TOOL NUMBER	DESCRIPTION	REMARKS
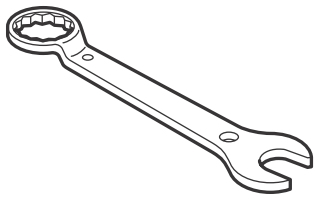 ST34099PA100	34099PA100	SPANNER	Used when measuring the rotating resistance of gearbox assembly.
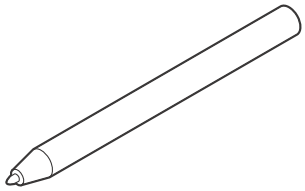 ST34099FA060	34099FA060	PUNCH HOLDER	Used for crimping.
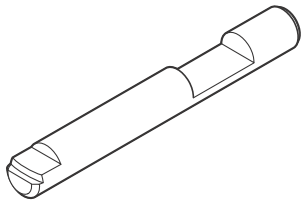 ST34099FA080	34099FA080	PUNCH	Used for removing crimps.
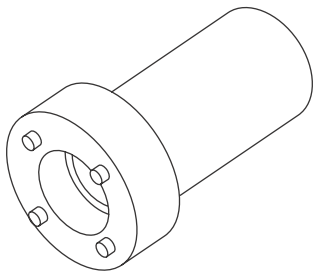 ST34199AE090	34199AE090	PLUG WRENCH	Used for removing the plug.
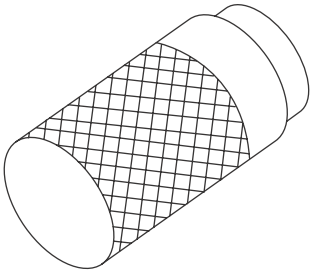 ST34199AE100	34199AE100	OIL SEAL PLUG REMOVER	Used for removing the oil seal plug.

ILLUSTRATION	TOOL NUMBER	DESCRIPTION	REMARKS
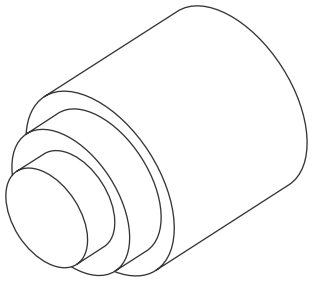 ST34199AE110	34199AE110	OIL SEAL PLUG INSTALLER	Used for installing the oil seal plug.
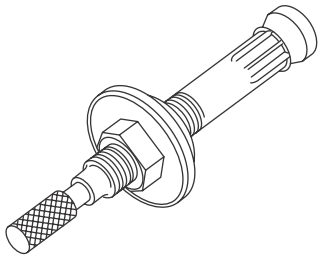 ST34199AE120	34199AE120	GEARBOX OIL SEAL REMOVER	Used for removing the gearbox oil seal.
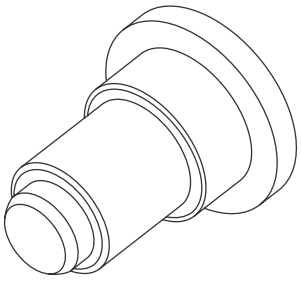 ST34199AE130	34199AE130	GEARBOX OIL SEAL INSTALLER	Used for installing the gearbox oil seal.
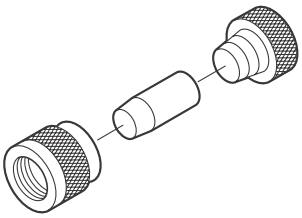 ST34199FE040	34199FE040	INSTALLER A, B, C	• Used for installing the oil seal to the rack assembly. • INSTALLER A: 34199FE070 • INSTALLER B: 34199FE080 • INSTALLER C: 34199FE090
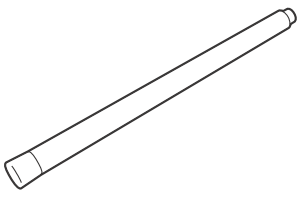 ST34199FE010	34199FE010	REMOVER	Used for removing the back-up ring and oil seal.

ILLUSTRATION	TOOL NUMBER	DESCRIPTION	REMARKS
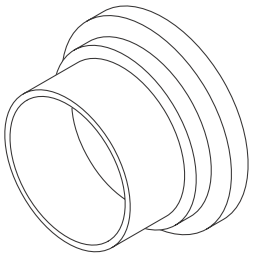 ST34199FE050	34199FE050	GUIDE	Used for installing the rack and seal into housing assembly.
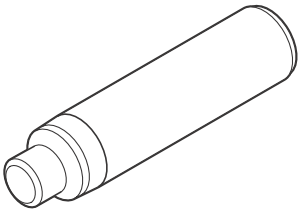 ST34199FE000	34199FE000	INSTALLER & REMOVER	Used for removing and installing the rack oil seal (outer and inner).
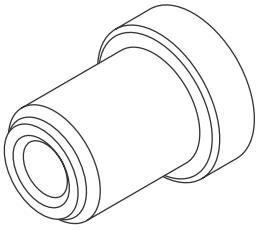 ST34199FE060	34199FE060	INSTALLER	Used for installing the rack oil seal (outer).
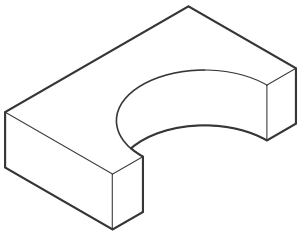 ST34199FE020	34199FE020	BASE	Used for crimping.
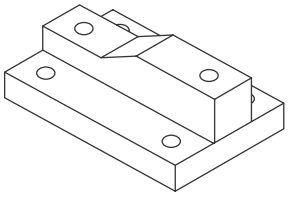 ST34199AG000	34199AG000	BOSS D	• Used when inspecting characteristic of gear-box assembly and disassembling it. • Used together with STAND (926200000).

2. GENERAL TOOL

TOOL NAME	REMARKS
Chain sling	• Used for hanging power unit. • Diameter: 6 mm (0.24 in) or 6.3 mm (0.25 in) • Length: 0.8 — 1 m (2.6 — 3.3 ft) • Chain inner width: 8.5 mm (0.33 in) or more • Chain external width: 23.5 mm (0.93 in) or less • Load capacity: 1.2 t (2646 lb) or more
Shackle	• Two units used for hanging power unit. • Attached to both end of chain sling and connected to engine hook. • Load capacity: 250 kg (551 lb) or more
Sling belt	• Used to remove and install the cradle. • Width: 35 — 40 mm (1.38 — 1.57 in) • Length: 2 m (6.6 ft) • Load capacity: 1 t (2205 lb) or more
Shackle	• Used to remove and install the cradle. • Load capacity: 500 kg (1103 lb) or more
Steering wheel puller	Used for removing the steering wheel.

2. Steering Wheel

A: REMOVAL

1) Disconnect the ground cable from battery.
2) Set the tire to the straight-ahead position.
3) Remove the airbag module. <Ref. to AB-31, REMOVAL, Driver's Airbag Module.>

WARNING:
Always refer to "Airbag System" before performing service on the airbag modules. <Ref. to AB-9, CAUTION, General Description.>
4) Place alignment marks on the steering wheel and steering shaft.

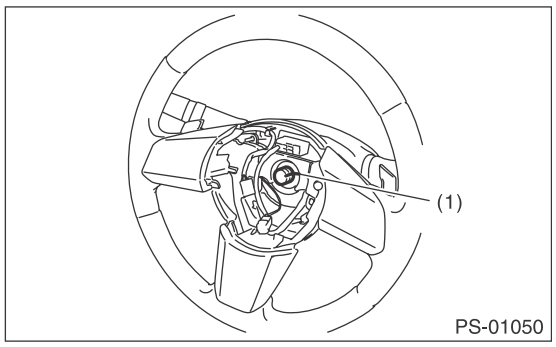

(1) Alignment mark

5) Remove the steering wheel nut and pull out the steering wheel from the shaft using the steering wheel puller.

CAUTION:
When removing, always use the steering wheel puller to avoid deforming the steering wheel.

B: INSTALLATION

WARNING:
Always refer to "Airbag System" before performing service on the airbag modules. <Ref. to AB-9, CAUTION, General Description.>
1) Align the center position of the roll connector. <Ref. to AB-93, ADJUSTMENT, Roll Connector.>
2) Install in the reverse order of removal.

NOTE:
Align the alignment marks on the steering wheel and steering shaft.

Tightening torque:
39 N·m (4.0 kgf-m, 28.8 ft-lb)

Column cover-to-steering wheel clearance:
2 — 4 mm (0.08 — 0.16 in)

C: DISASSEMBLY

1) Remove the connector and screws and remove the paddle shift.

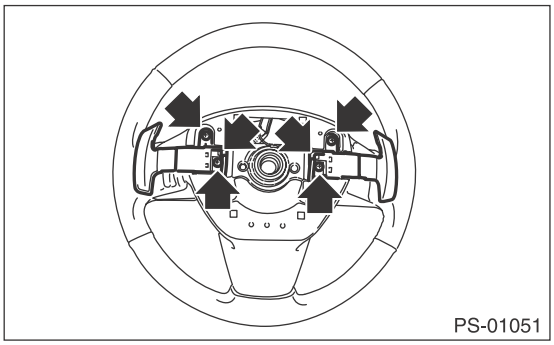

2) Remove the hook, and then remove the switch panel and lower cover.

D: ASSEMBLY

Assemble in the reverse order of disassembly.

Tightening torque:
Paddle shift
1.7 N·m (0.2 kgf-m, 1.3 ft-lb)

E: INSPECTION

Measure the paddle switch resistance.

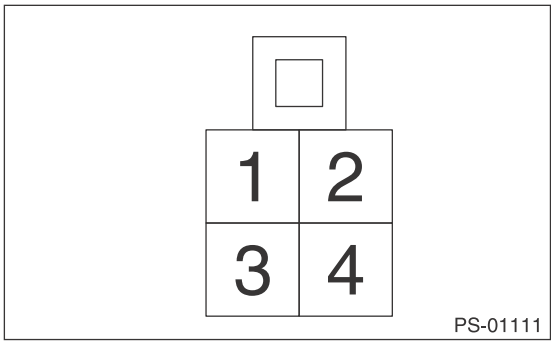

Step		Check	Yes	No
1	**SHIFT-UP SWITCH CONTINUITY CHECK.** 1) Operate the + side of paddle shift assembly and hold it. 2) Measure the resistance between the paddle shift assembly connector terminals. ***Terminals*** ***No. 2 — No. 4:***	Is the resistance less than 10 Ω?	Go to step **2**.	Replace the paddle shift assembly.
2	**SHIFT-DOWN SWITCH CONTINUITY CHECK.** 1) Operate the – side of paddle shift assembly and hold it. 2) Measure the resistance between the paddle shift assembly connector terminals. ***Terminals*** ***No. 2 — No. 3:***	Is the resistance less than 10 Ω?	Go to step **3**.	Replace the paddle shift assembly.
3	**CHECK SHIFT SWITCH INSULATION.** 1) Do not operate the paddle shift assembly. 2) Measure the resistance between the paddle shift assembly connector terminals. ***Terminals*** ***No. 2 — No. 4:*** ***No. 2 — No. 3:***	Is the resistance 1 MΩ or more?	Paddle shift assembly is normal.	Replace the paddle shift assembly.

3. Universal Joint

A: REMOVAL

1) Adjust the tilt position of the steering column to the lowest position and lock the tilt lever.
2) Prevent the steering wheel from turning using the seat belt.

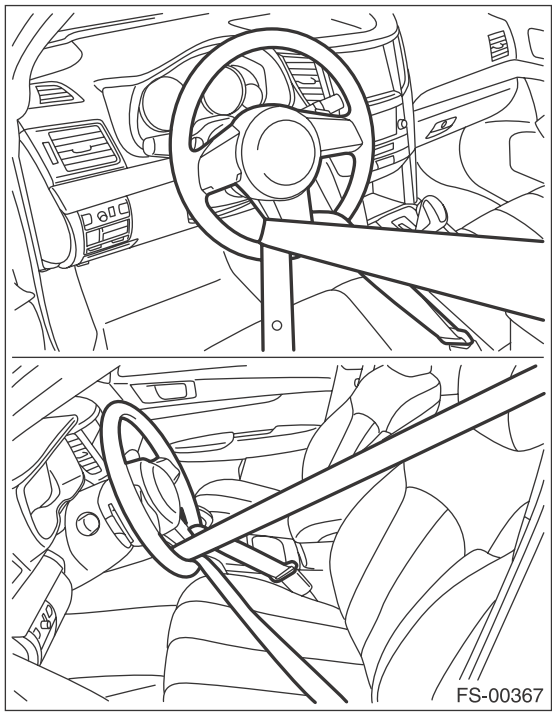

3) Place alignment marks on universal joint.
4) Remove the universal joint bolt and remove the universal joint.

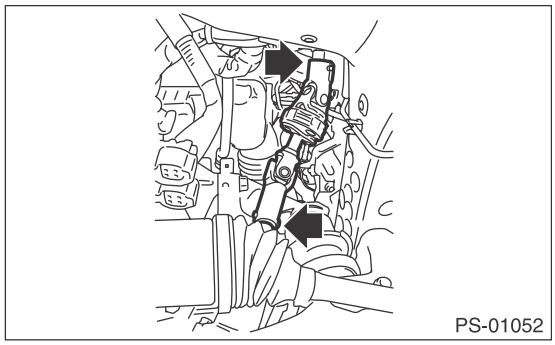

B: INSTALLATION

1) Adjust the tilt position of the steering column to the lowest position and lock the tilt lever.
2) Align the cutout portion at serrated section of the column shaft and yoke, then install the universal joint into column shaft.

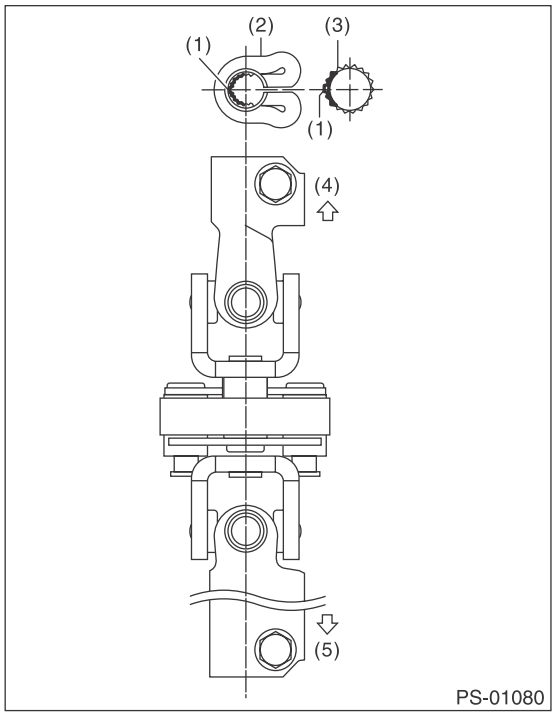

(1) Cutout portion
(2) Yoke
(3) Column shaft
(4) Column shaft side
(5) Gearbox side

3) Install the universal joint to the serrations of gearbox assembly by matching alignment marks.
4) Tighten the bolts in the order from gearbox side to column shaft side.

CAUTION:
Always follow the tightening order for universal joint and tightening torque. Otherwise this may cause heavy steering effort.

Tightening torque:
24 N·m (2.4 kgf-m, 17.7 ft-lb)

Clearance between universal joint coupling and adjacent parts:
15 mm (0.59 in) or more

C: INSPECTION

1) Check for wear, damage or any other faults. Replace as necessary

Service limit:
Universal joint play: 0 mm (0 in)
Maximum swing torque: 0.3 N (0.03 kgf, 0.07 lbf)

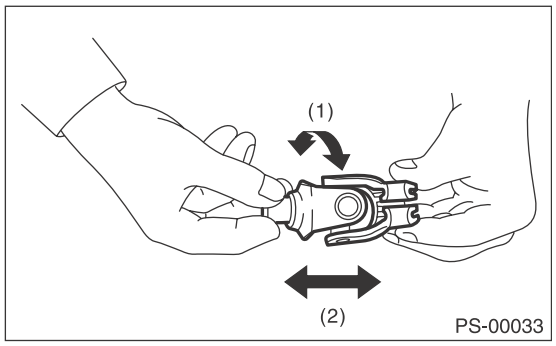

(1) Swing torque
(2) Play

2) Measure the swing torque of universal joint.

Service limit:
Maximum load: 3.8 N (0.39 kgf, 0.86 lbf) or less

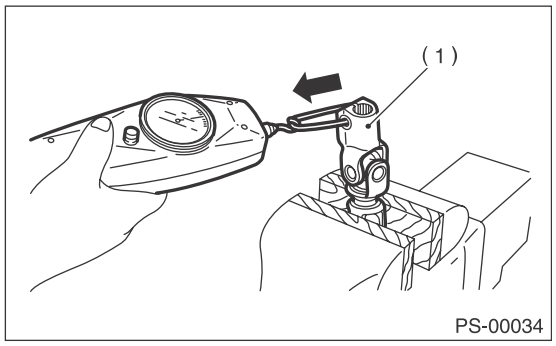

(1) Yoke (Gearbox side)

Service limit:
Maximum load: 3.8 N (0.39 kgf, 0.86 lbf) or less

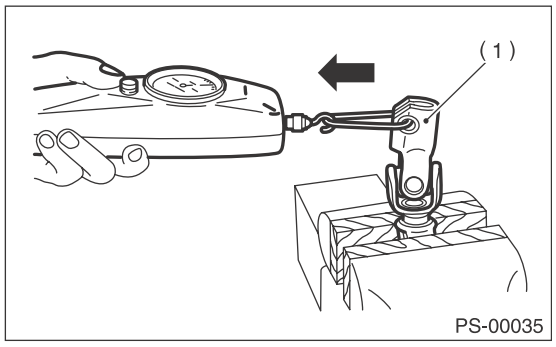

(1) Yoke (Gearbox side)

Service limit:
Maximum load: 7.3 N (0.74 kgf, 1.64 lbf) or less

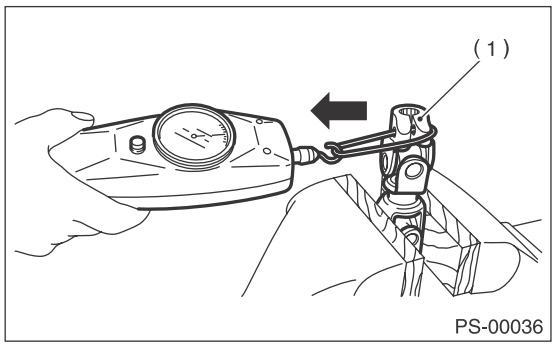

(1) Yoke (Steering column side)

Service limit:
Maximum load: 7.3 N (0.74 kgf, 1.64 lbf) or less

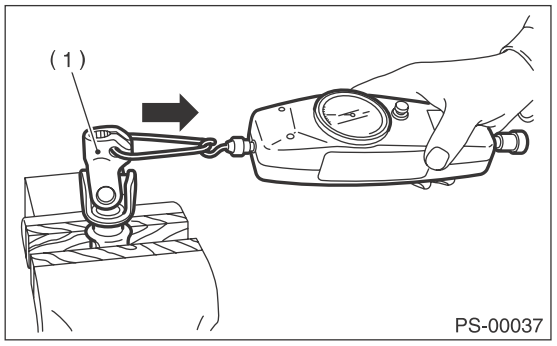

(1) Yoke (Steering column side)

4. Steering Column

A: REMOVAL

1) Adjust the tilt position to the lowest position and lock the tilt lever.
2) Remove the steering wheel. <Ref. to PS-16, REMOVAL, Steering Wheel.>
3) Remove the universal joint. <Ref. to PS-18, REMOVAL, Universal Joint.>
4) Remove the instrument panel lower cover.
5) Remove all connectors from the steering column.
6) Remove the two bolts under instrument panel securing the steering column.

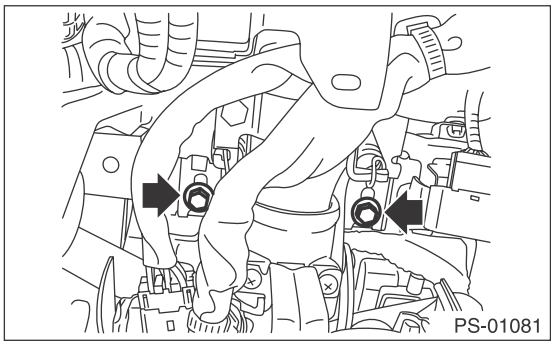
PS-01081

7) Pull out the steering shaft assembly from the hole on toe board.

CAUTION:
• Always remove the universal joint before removing the steering column installation bolt to avoid damage to the universal joint.
• Do not loosen the tilt lever when the steering column is not secured to the vehicle.

B: INSTALLATION

1) Install the grommet to the toe board.

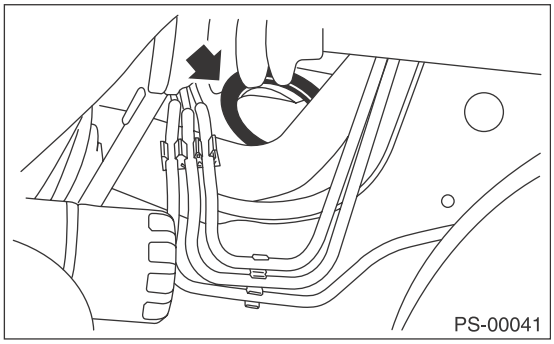
PS-00041

2) Insert the end of the steering shaft into the toe board grommet.
3) Tighten the steering column installation bolt located under the instrument panel with the tilt lever fixed.

Tightening torque:
20 N·m (2.0 kgf-m, 14.8 ft-lb)

4) Connect all the connectors under the instrument panel.
5) Connect the airbag system connector at the harness spool.

NOTE:
Make sure to apply double lock.
6) Install the instrument panel lower cover.
7) Install the universal joint. <Ref. to PS-18, INSTALLATION, Universal Joint.>

CAUTION:
• Always install the universal joint after installing the steering column to avoid damage to the universal joint.
• Always follow the tightening order for universal joint and tightening torque. Otherwise this may cause heavy steering effort.

8) Align the center position of the roll connector. <Ref. to AB-93, ADJUSTMENT, Roll Connector.>
9) Install the steering wheel. <Ref. to PS-16, INSTALLATION, Steering Wheel.>

C: DISASSEMBLY

1) Remove the screws and remove the column cover.

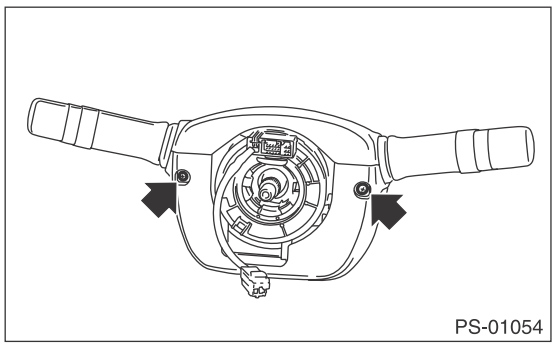
PS-01054

2) Remove the screw and remove the combination switch.

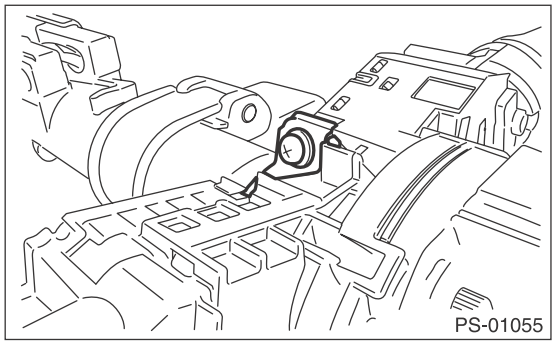
PS-01055

D: ASSEMBLY

Assemble in the reverse order of disassembly.

Tightening torque:
Combination switch
3.5 N·m (0.4 kgf-m, 2.6 ft-lb)
Column cover
1.2 N·m (0.12 kgf-m, 0.9 ft-lb)

E: INSPECTION

1. BASIC INSPECTION

Measure the overall length of steering column. If not within specification, replace it.

Standard: Overall length L

Tilt and telescopic column (measure while minimized)

$816.9^{+1.5}_{-1.5}$ mm ($32.2^{+0.059}_{-0.059}$ in)

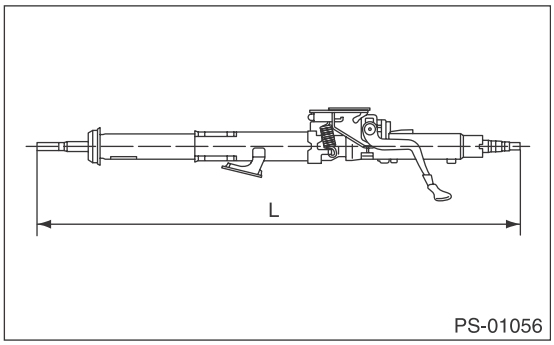

2. INSPECTION OF AIRBAG SYSTEM

Refer to “Airbag System” for airbag inspection procedure. <Ref. to AB-32, INSTALLATION, Driver’s Airbag Module.>

5. Steering Gearbox

A: REMOVAL

1) Remove the cradle. <Ref. to FS-15, REMOVAL, Cradle.>
2) Remove the bolt, and then remove the left and right main mounting bracket.

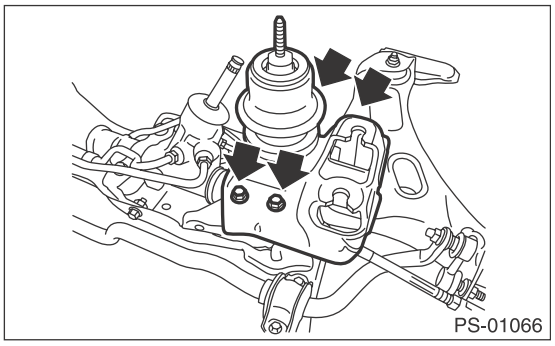

3) Remove the bolts and remove the steering gearbox.

CAUTION:
Be careful not to damage the steering boot.

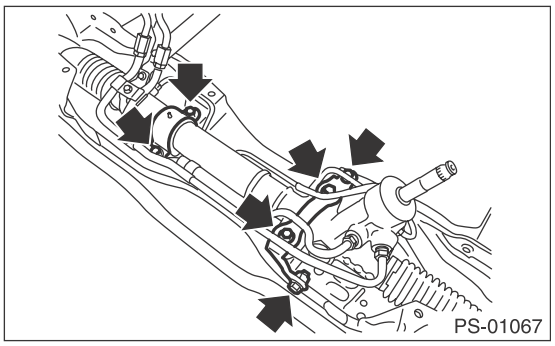

B: INSTALLATION

1) Install in the reverse order of removal.

Tightening torque:
<Ref. to PS-4, COMPONENT, General Description.>
<Ref. to FS-3, COMPONENT, General Description.>
2) Inspect the wheel alignment and adjust if necessary.

C: DISASSEMBLY

1) Disconnect the four pipes from steering body and control valve housing.
2) Secure the gearbox removed from vehicle in a vise using ST.

ST1	926200000	STAND
ST2	34199AG000	BOSS D

CAUTION:
Secure the gearbox assembly in a vise using ST as shown. Do not affix the gearbox to the vice without this ST.

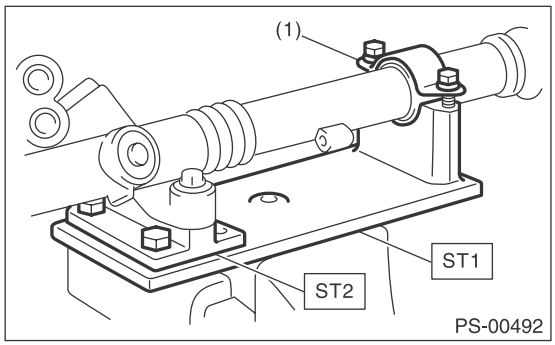

(1) Clamp

3) Remove the tie-rod end and lock nut from gearbox.
4) Remove the clip of boot outside using the plier, and then slide the boot to the tie-rod end side.

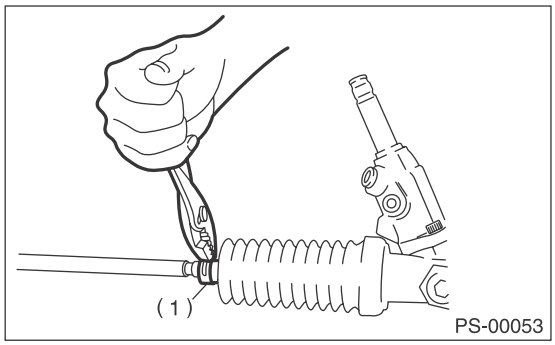

(1) Clip

5) Using a flat tip screwdriver, remove the band from boot.

NOTE:
Replace the boot if there is damage, cracks or deterioration.

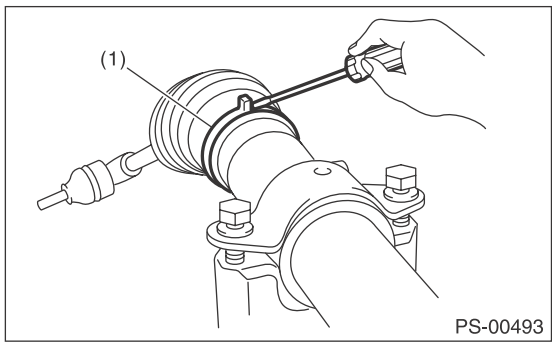

(1) Band

6) Using the ST, loosen the lock nut.
ST 34199AJ000 SPECIAL TOOL CPS LHD

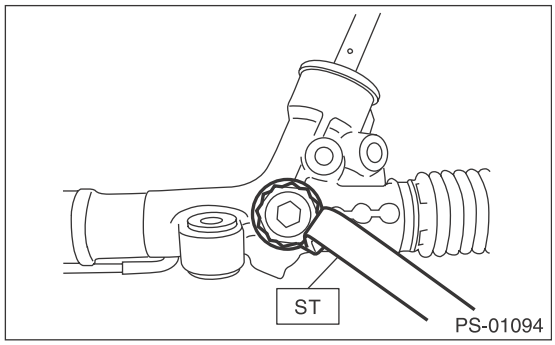

7) Tighten the adjusting screw until it can no longer be tightened.

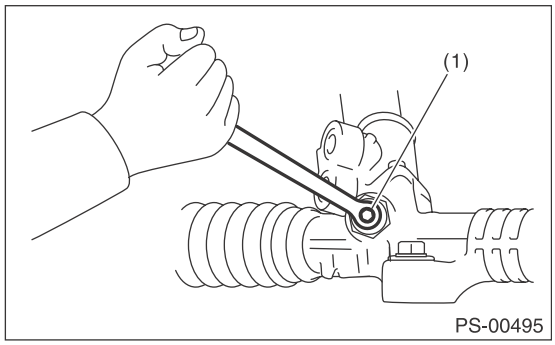

(1) Adjusting screw

8) Remove the tie-rod.
9) Loosen the adjusting screw, and remove the spring and sleeve.
10) Clean any dirt adhered to the input shaft. Remove the dust cover, paying attention not to scratch the housing or input shaft and not to allow foreign matter to enter gearbox interior.

CAUTION:
Roll a vinyl tape around the input shaft spline to avoid scratching the dust cover.

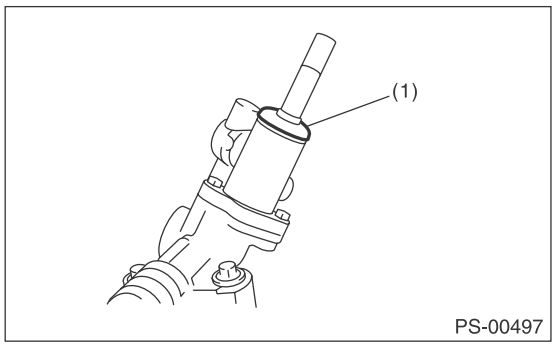

(1) Dust cover

11) Align the ST pin with plug hole to install. Rotate the ST counterclockwise to remove plug.
ST 34199AE090 PLUG WRENCH

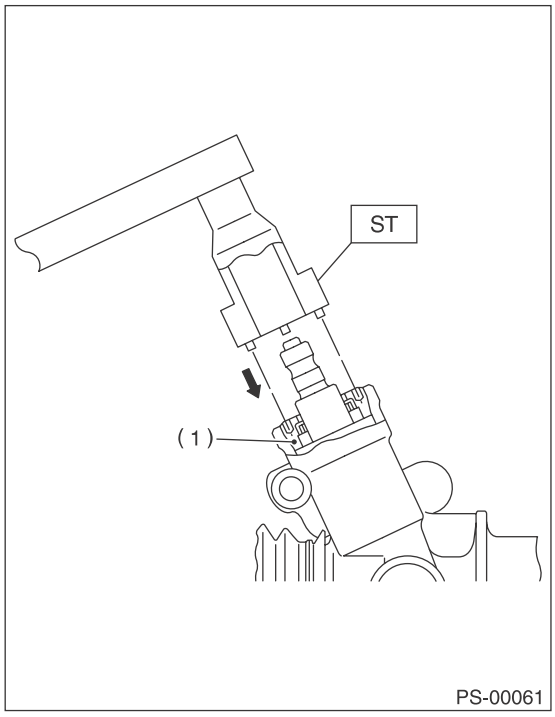

(1) PLUG

12) Remove the valve assembly paying attention not to scratch the seal ring or valve housing inner surfaces.

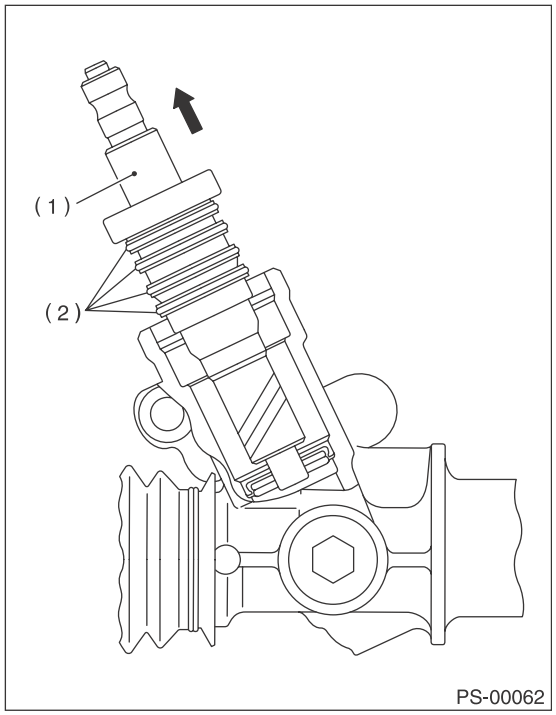

(1) Valve ASSY
(2) Seal ring

13) Remove the holder.
14) Attach the ST to the pinion housing side of the rack, and push out the rack together with the outer side oil seal.
ST 34199FE000 INSTALLER & REMOVER

NOTE:
Block the pipe connection of steering body to prevent fluid from flowing out.

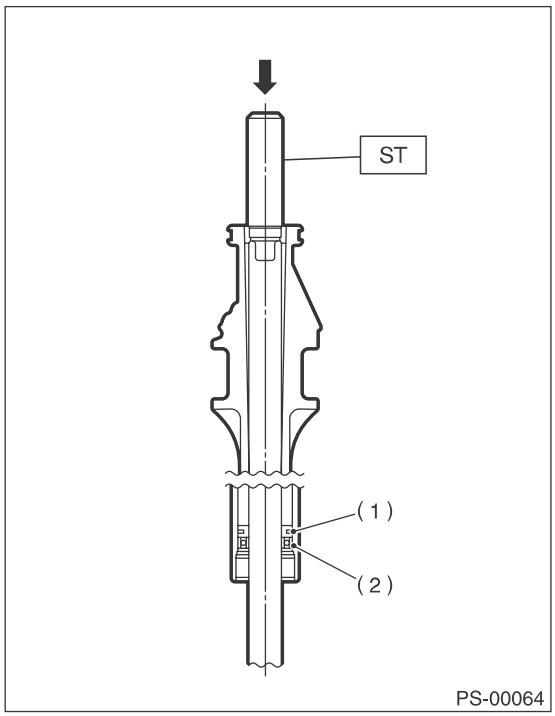

(1) Rack piston
(2) Outer side oil seal

15) Insert the ST from the valve side and press the back-up ring and oil seal out.
ST 34199FE010 REMOVER

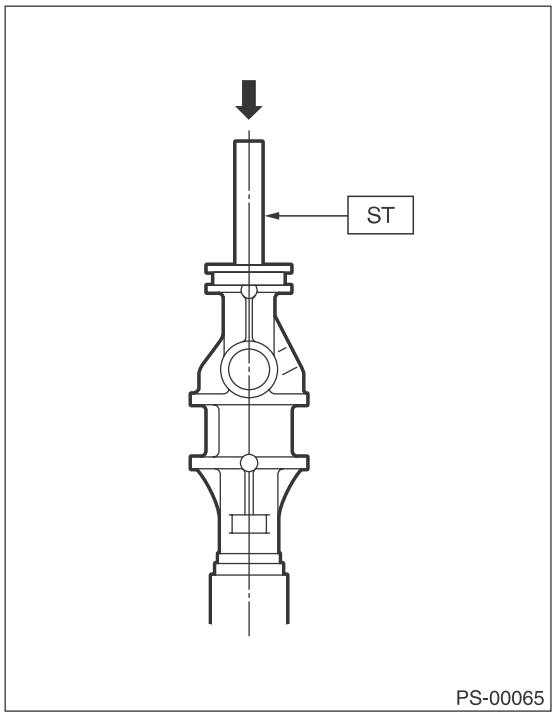

16) Using ST1 and ST2, repair the crimped portion of cylinder.
ST1 34099FA080 PUNCH
ST2 34199FE020 BASE

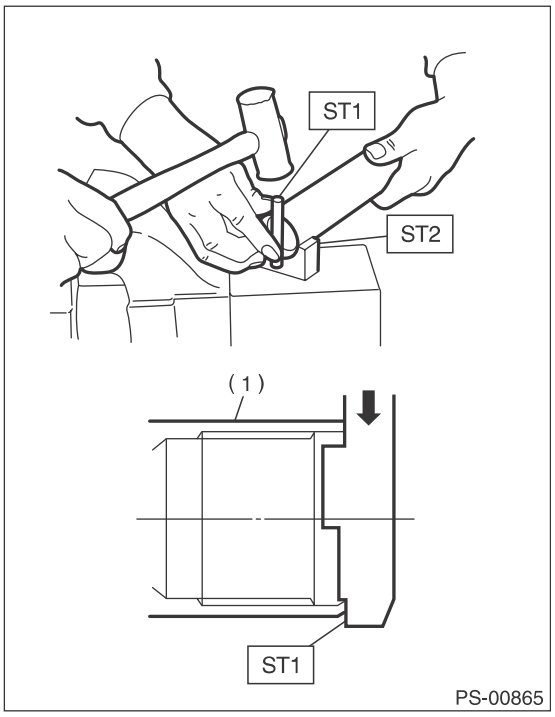

(1) Cylinder

17) If the cylinder edge is deformed in a convex shape, repair using an oil stone.

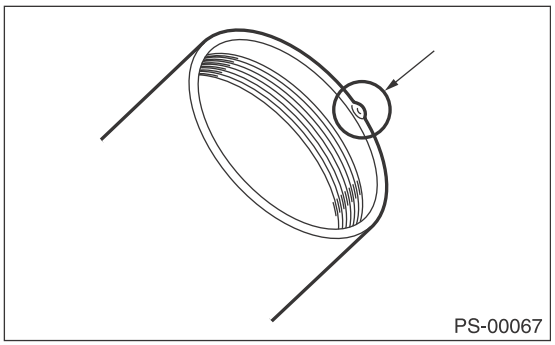

18) Using the ST, remove the oil seal and push out from the plug.
ST 34199AE100 OIL SEAL PLUG REMOVER

NOTE:
Do not apply force on the plug edge surface.

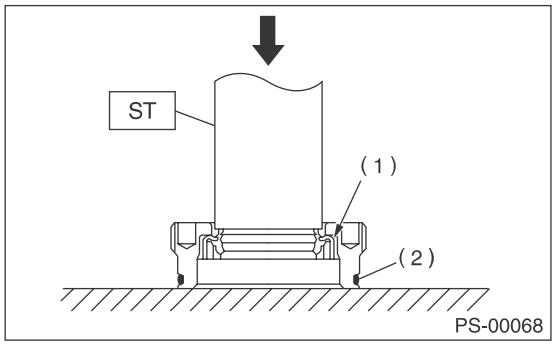

(1) Oil seal
(2) O-ring

19) Set the ST at a size shown in the figure.
ST 34199AE120 GEARBOX OIL SEAL REMOVER

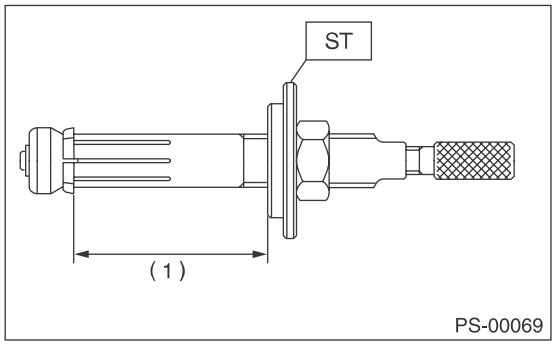

(1) 70 mm (2.76 in)

20) Set the stopper to gearbox, then insert the tip of the ST to the gearbox.

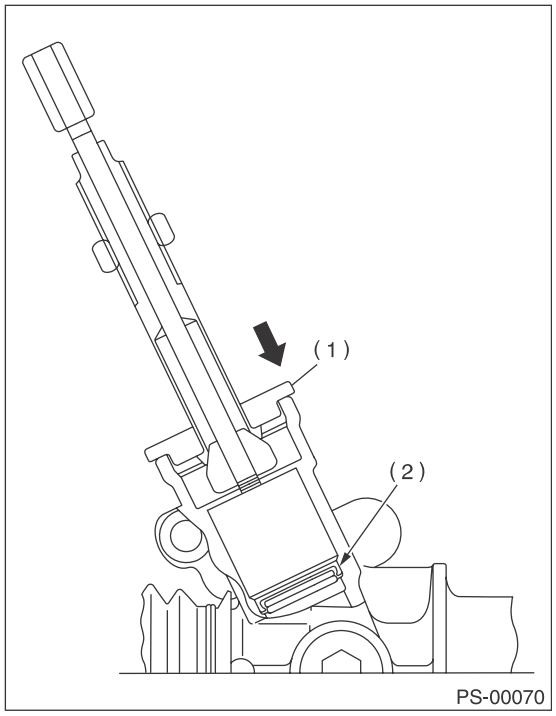

(1) STOPPER
(2) Oil seal

21) By fixing the 2-surface widths, press-in the rod while rotating it and catch the oil seal.

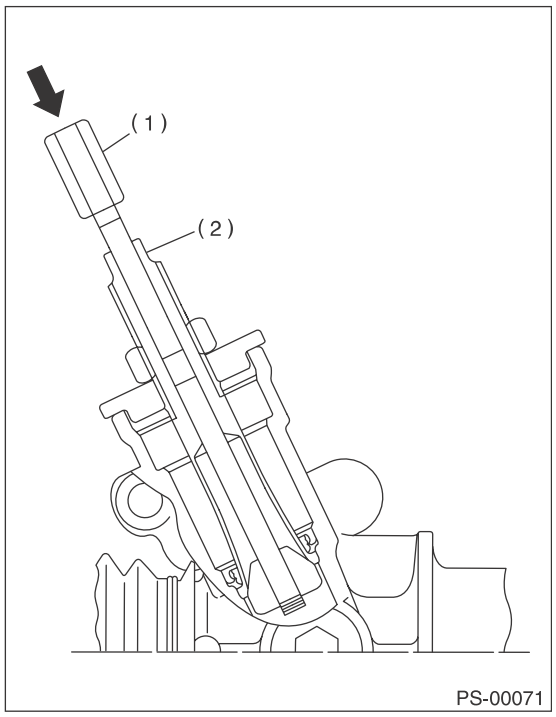

(1) Rod
(2) 2-surface widths

22) While fixing the 2-surface widths, pull out the oil seal by rotating nut.

CAUTION:
Take care not to scratch the gearbox inner surface.

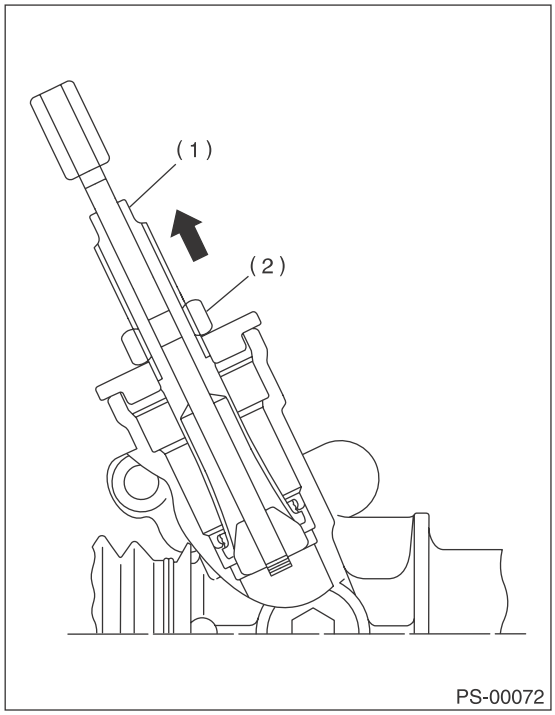

(1) 2-surface widths
(2) Nut

D: ASSEMBLY

1) Apply a coat of grease to the inside and outside of the new oil seal.

Steering grease:
VALIANT GREASE M2

2) Verify the direction of the oil seal and installation position. Using the ST and a press, press-fit the oil seal into the gearbox.

CAUTION:
• Make sure to press fit the oil seal in all the way.
• The gap between the gearbox end face and the ST is to be approximately 4 mm (0.157 in) after press fitting.

ST 34199AE130 GEARBOX OIL SEAL INSTALLER

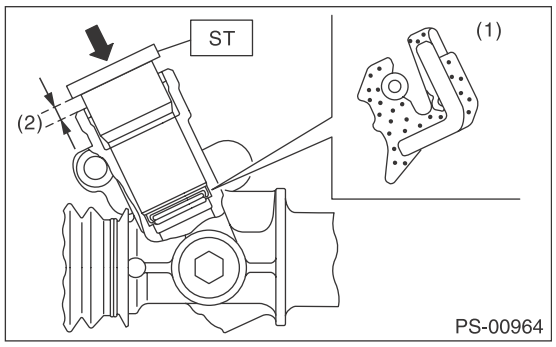

(1) Oil seal
(2) 4 mm (0.157 in)

3) Attach the steering body to ST as shown in the figure. Apply a coat of grease to needle bearing.

ST1 926200000 STAND
ST2 34199AG000 BOSS D

CAUTION:
Make sure the needle bearing is free from defects. If it is faulty, replace the steering body with a new part.

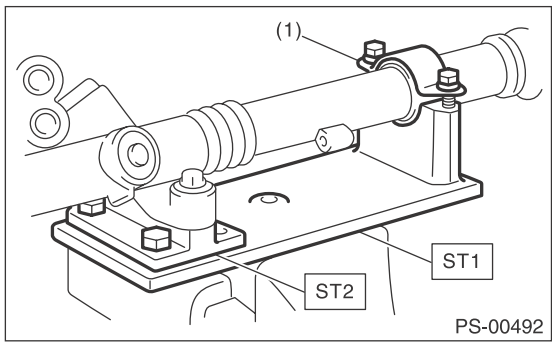

(1) Clamp

4) Using the ST A and ST B, attach the oil seal to ST C.

ST 34199FE040 INSTALLER A, B, C

- INSTALLER A: 34199FE070
- INSTALLER B: 34199FE080
- INSTALLER C: 34199FE090

NOTE:
Face the oil seal in the direction as shown in the figure.

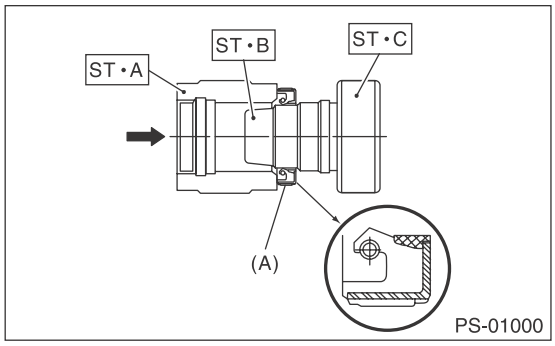

(A) Oil seal

5) Insert the ST C with oil seal assembled from the gear side of rack. Remove the oil seal from ST C near piston, and then remove the ST C from rack.

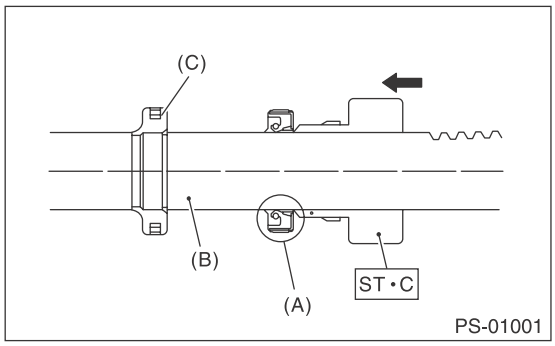

(A) Oil seal
(B) Rack
(C) Piston

6) Install the back-up washer from the gear side of rack.

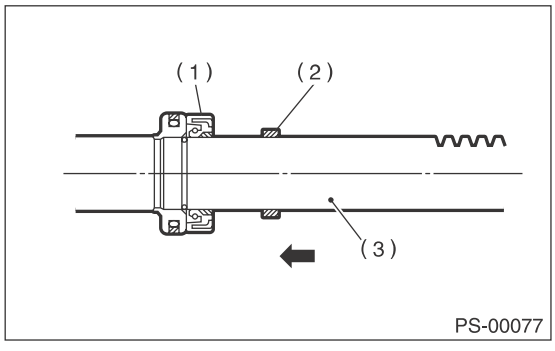

(1) Oil seal
(2) Back-up washer
(3) Rack

7) Apply a coat of grease to the grooves in rack, sliding surface of sleeve and sealing surface of piston. Then insert the rack into steering body from cylinder side.
8) Temporarily tighten the holder to gearbox cylinder.
9) Put a mark on a location of 9 mm (0.35 in) from the ST end surface as shown in the figure.
ST 34199FE000 INSTALLER & REMOVER

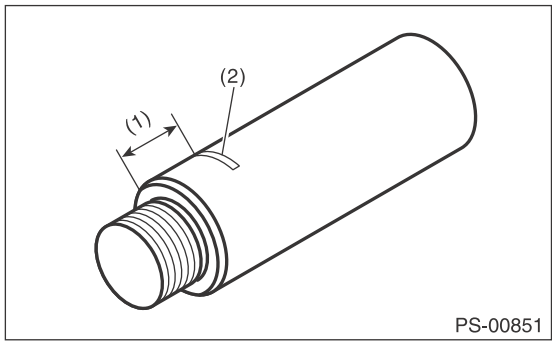

(1) 9 mm (0.35 in)
(2) Place a mark

10) Set the ST to the end of rack.
ST 34199FE000 INSTALLER & REMOVER
11) Using a press, press-fit until the mark on ST is aligned to the end surface of holder.

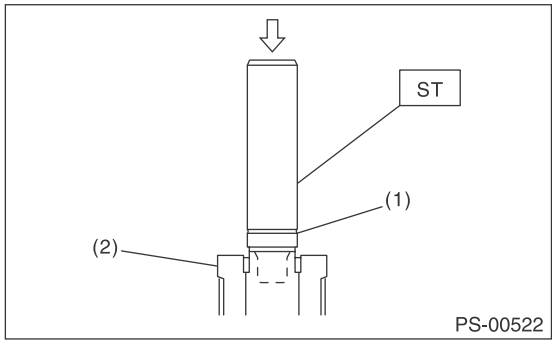

(1) Mark
(2) HOLDER

12) Remove the ST and holder.
13) Insert the outer side oil seal to the rack in the same procedure as step 4) to 5).
ST 34199FE040 INSTALLER A, B, C
- INSTALLER A: 34199FE070
- INSTALLER B: 34199FE080
- INSTALLER C: 34199FE090

14) Make the ST2 pass through the rack, and then press in the rack and ST2 using a press.
Press in the outer side oil seal until the ST1 and ST2 comes into contact with each other and the rack end surface is aligned to the end surface of the ST2.
ST1 34199FE050 GUIDE
ST2 34199FE060 INSTALLER

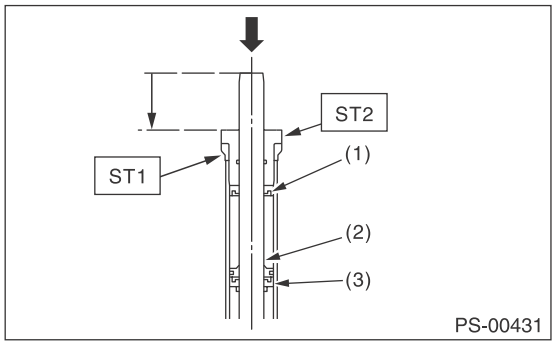

(1) Outer side oil seal
(2) Rack piston
(3) Inner side oil seal

15) Attach a new holder on the cylinder side of the steering body.

Tightening torque:
75 N·m (7.6 kgf-m, 55.3 ft-lb)

16) Using the ST, crimp one location less than 3 mm (0.12 in) from the holder.

CAUTION:
Be careful not to deform the holder.
ST1 34099FA060 PUNCH HOLDER
ST2 34199FE020 BASE

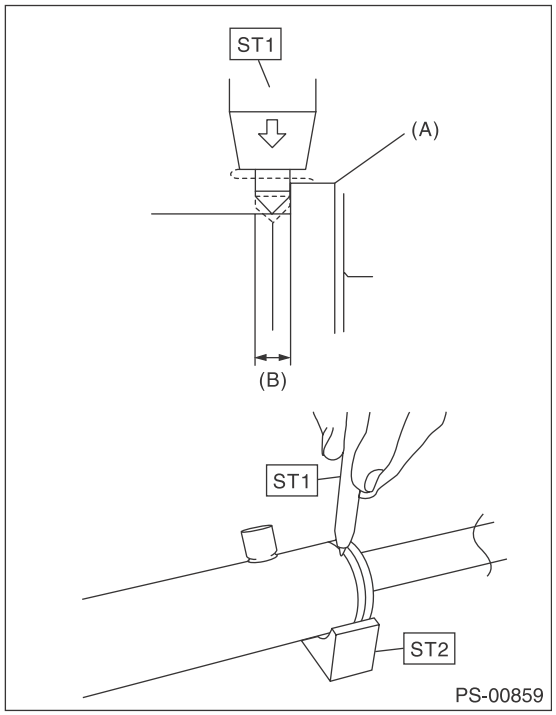

(A) HOLDER
(B) 3 mm (0.12 in)

17) Roll a vinyl tape on the serration portion of valve assembly, and then apply grease on the tape surface.

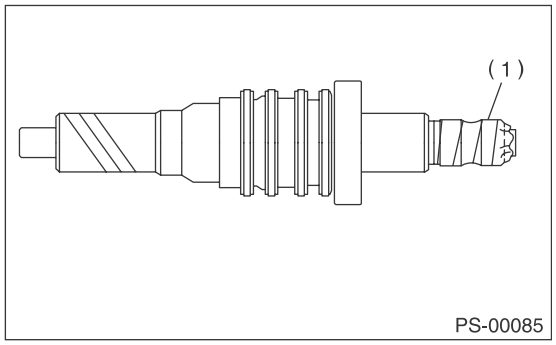

(1) Vinyl tape

18) Apply a coat of grease on the gear teeth of the valve assembly, and then attach the valve assembly taking care not to scratch oil seal and seal ring.

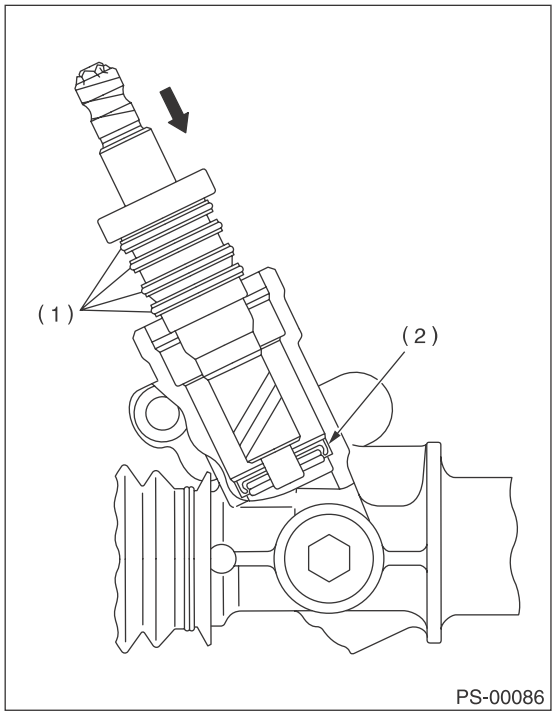

(1) Seal ring
(2) Oil seal

19) Replace the O-rings of plug circumference with new O-rings.
20) Apply grease on the oil seal circumference, and then press it into the plug using ST and a press.
ST 34199AE110 OIL SEAL PLUG INSTALLER

CAUTION:
• Install the oil seal paying attention to correct direction.
• Make sure to press fit the oil seal in all the way.
• The gap between the plug and the ST is to be approximately 1 mm (0.039 in) after press fitting.

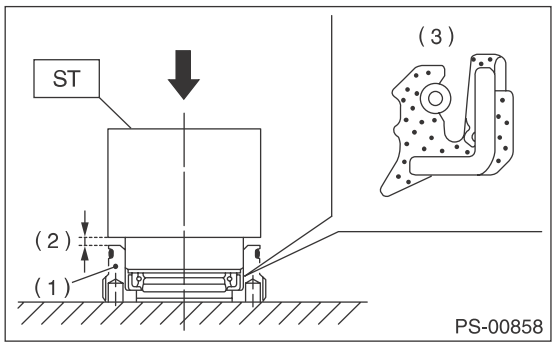

(1) PLUG
(2) 1 mm (0.039 in)
(3) Oil seal

21) Attach the plug using ST.
ST 34199AE090 PLUG WRENCH

Tightening torque:
64 N·m (6.5 kgf-m, 47.2 ft-lb)

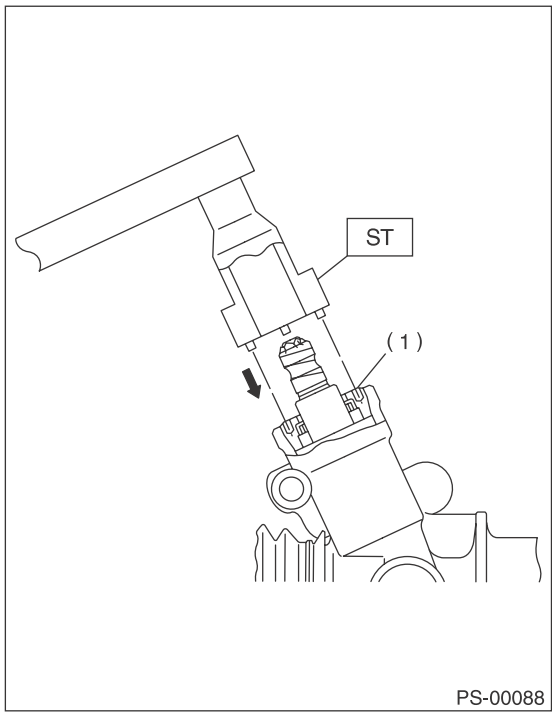

(1) PLUG

22) Install the dust cover, and remove the vinyl tape.

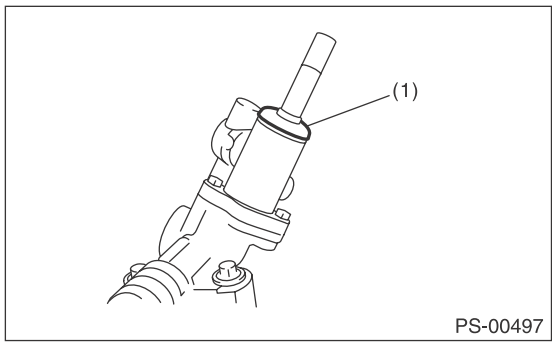

(1) Dust cover

23) Temporarily tighten the tie-rod to the rack end, and then operate the rack from lock to lock for two or three times to make it fit in.

CAUTION:
If operating the rack from lock to lock without installing tie-rods, it may damage the oil seal. Always install the tie-rods LH and RH.

24) Apply liquid gasket to 1/3 or more of entire perimeter of adjusting screw thread.

Liquid gasket:
THREE BOND 1141 (Part No. 004403006)

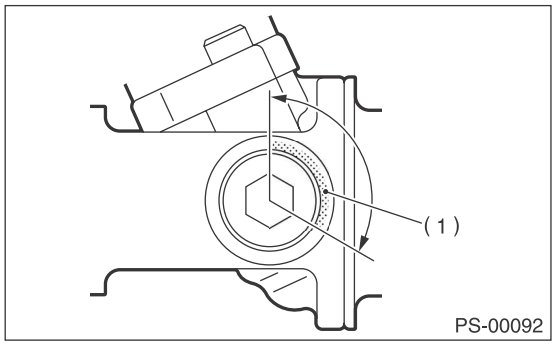

(1) Apply liquid gasket to 1/3 or more of the entire perimeter.

25) Apply a coat of grease to the sliding surface of sleeve and seating surface of spring, and then insert the sleeve into steering body.
Charge the adjusting screw with grease, and then insert the spring into adjusting screw. Then install on the steering body.

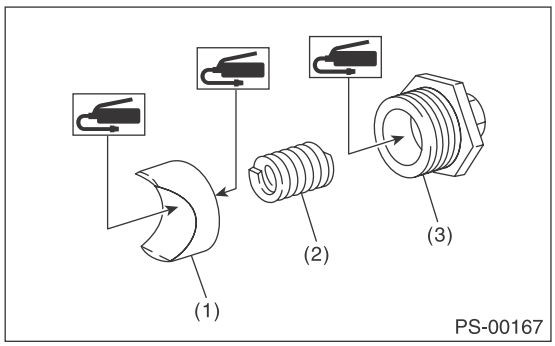

(1) Sleeve
(2) Spring
(3) Adjusting screw

26) Tighten the adjusting screw to the specified torque, then loosen it.

Tightening torque:
9.8 N·m (1.0 kgf-m, 7.2 ft-lb)

27) Tighten the adjusting screw to the specified torque, then loosen it.

Tightening torque:
4.9 N·m (0.5 kgf-m, 3.6 ft-lb)

28) Tighten the adjusting screw to the specified torque, then loosen it approx. 30°.

CAUTION:
Do not loosen by 37° or more.

Tightening torque:
4.9 N·m (0.5 kgf-m, 3.6 ft-lb)

29) Remove the tie-rod.

30) Check that play and looseness are within specifications. <Ref. to PS-34, SERVICE LIMIT, INSPECTION, Steering Gearbox.>
31) Install the lock nut. While holding the adjusting screw with wrench, tighten the lock nut using ST.
ST 34199AJ000 SPECIAL TOOL CPS LHD

Tightening torque (lock nut):
39 N·m (4.0 kgf-m, 28.9 ft-lb)

NOTE:
Hold the adjusting screw with a wrench to prevent it from turning while tightening lock nut.
32) Install the tie-rod into rack.

Tightening torque:
90 N·m (9.1 kgf-m, 66.4 ft-lb)

NOTE:
Check the mating face of rack and tie-rod for foreign matter such as dust etc.
33) Apply a coat of grease to the tie-rod groove, and then install the boot to the housing.

NOTE:
Make sure that the boot is installed without unusual inflation or deflation.

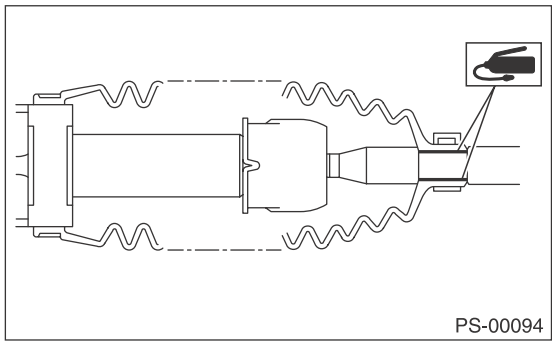
PS-00094

34) Using boot clamp pliers, crimp it so that the clearance of the boot band crimping section becomes 2 mm (0.08 in) or less.

NOTE:
Use a new boot band.

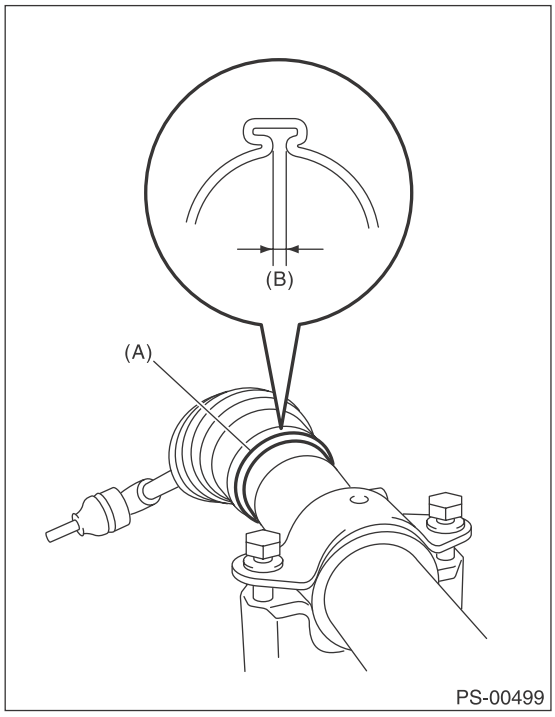

PS-00499

(A) Boot band
(B) 2 mm (0.08 in) or less

35) Fix the boot end with small clip.

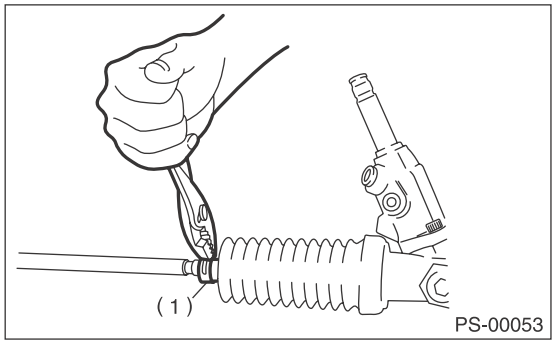

PS-00053

(1) Clip

36) After installing, check that the boot end is installed to the groove of the tie-rod.
37) If the tie-rod end has been removed, screw in lock nut and tie-rod end to the screwed portion of tie-rod, and tighten the lock nut temporarily in a position as shown in the figure.

Installed tie-rod length L:
24 mm (0.9 in)

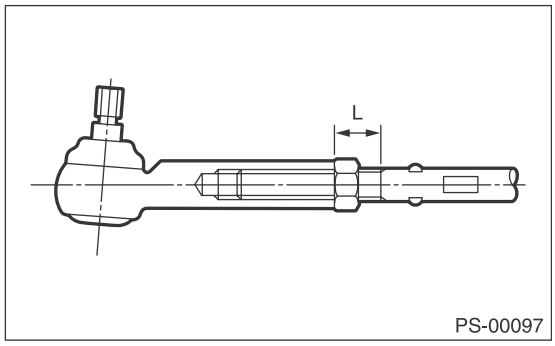

38) Inspect the gearbox as follows:
"A" Holding the tie-rod end, repeat lock to lock several times as quickly as possible.
"B" Holding the tie-rod end, turn it slowly at a radius several times as large as possible.
Finally, make sure that the boot is installed in the specified position without inflating.

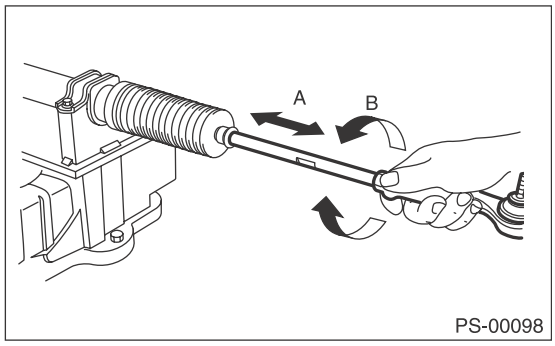

39) Remove the gearbox from ST.
ST1 926200000 STAND
ST2 34199AG000 BOSS D
40) Attach the 4 pipes to the steering body and control valve housing.

E: INSPECTION

1. BASIC INSPECTION

1) Clean all the disassembled parts, and check for wear, damage or any other faults, then repair or replace as necessary.
2) When disassembling, check the inside of gearbox for water. If any water is found, carefully check the boot for damage, input shaft dust seal, adjusting screw and boot clips for poor sealing. If faulty, replace with new parts.

No.	Parts	INSPECTION	Corrective action
1	Input shaft	(1) Bent input shaft (2) Damage on serration	If the bend or damage is excessive, replace the entire gearbox.
2	Dust seal	(1) Crack or damage (2) Wear	If the outer wall slips, the lip is worn out or damage is found, replace it with a new part.
3	Rack & pinion	Poor mating of rack with pinion	(1) Adjust the backlash properly. By measuring the turning torque of the gearbox and sliding resistance of rack, check if the rack & pinion engage uniformly and smoothly with each other. (Refer to “Service limit”.) (2) Pull out the entire rack to allow viewing of the teeth, and check for damage. When abnormality is found in either (1) or (2), replace the entire gearbox.
4	Gearbox unit	(1) Bending of the rack shaft (2) Bending of the cylinder portion (3) Crack or damage on the cast iron portion	Replace the gearbox with a new part.
		(4) Wear or damage on rack bushing	If the free play of rack shaft in radial direction is out of the specified range, replace the gearbox with new part. (Refer to “Service limit”.)
		(5) Wear on input shaft bearing	If the free play of input shaft in radial and axial direction is out of the specified range, replace the gearbox with a new part. (Refer to “Service limit”.)
5	Boot	Crack, damage or deterioration	Replace.
6	Tie-rod	(1) Looseness of ball joint (2) Bend of tie-rod	Replace.
7	Tie-rod end	Damage or deterioration of dust seal	Replace.
8	Adjusting screw spring	Deterioration	Replace.
9	Boot clip	Deterioration	Replace.
10	Sleeve	Damage	Replace.
11	Pipe	(1) Damage to flared surface (2) Damage to flare nut (3) Damage to pipe	Replace.

2. SERVICE LIMIT

Make a measurements as follows. If it exceeds the specified service limits, adjust or replace.

NOTE:
When making a measurement, vise the gearbox using ST. Never vise the gearbox by inserting aluminum plates etc. between vise and gearbox.
ST1 926200000 STAND
ST2 34199AG000 BOSS D

Sliding resistance of rack shaft:

Service limit
314 N (32 kgf, 71 lbf) or less

Difference between right and left sliding resistance:
20% or less

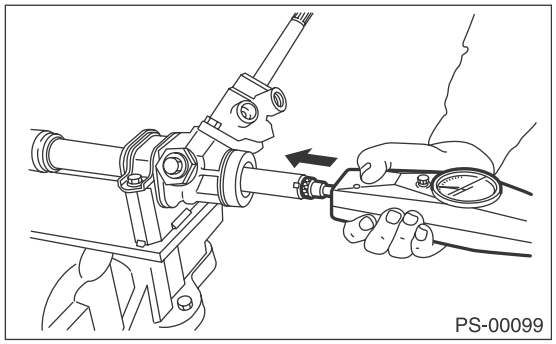
PS-00099

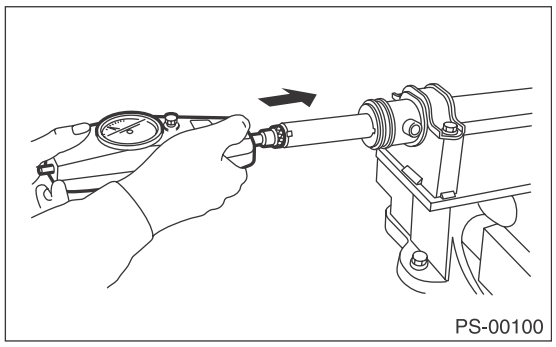
PS-00100

3. RACK SHAFT PLAY IN THE RADIAL DIRECTION

Right-turn steering:

Service limit
Direction ⬅ ➡
0.4 mm (0.016 in) or less
Direction ⇦ ⇨
0.6 mm (0.024 in) or less

Condition
L: 5 mm (0.20 in)
P: 98 N (10 kgf, 22 lbf)

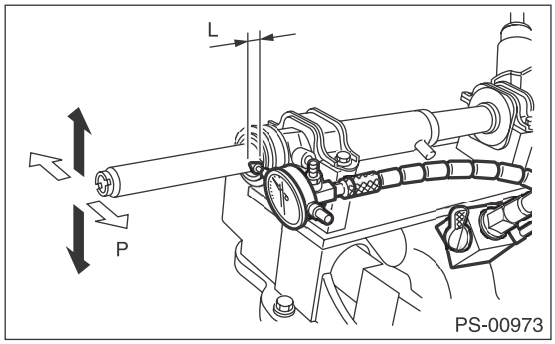

PS-00973

Left-turn steering:

Service limit
Direction ⇦ ⇨ ⬅ ➡
0.4 mm (0.016 in) or less

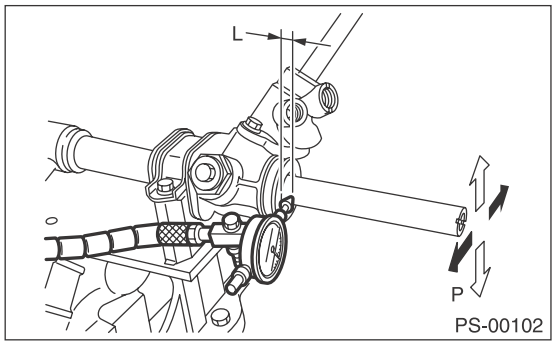

PS-00102

4. INPUT SHAFT PLAY

In radial direction:

Service limit
0.18 mm (0.0071 in) or less

Condition
P: 98 N (10 kgf, 22 lbf)

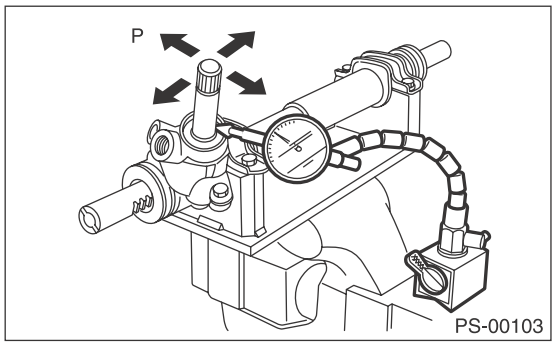

PS-00103

In axial direction:

Service limit
0.27 mm (0.0106 in) or less

Condition

P: 20 — 49 N (2 — 5 kgf, 4 — 11 lbf)

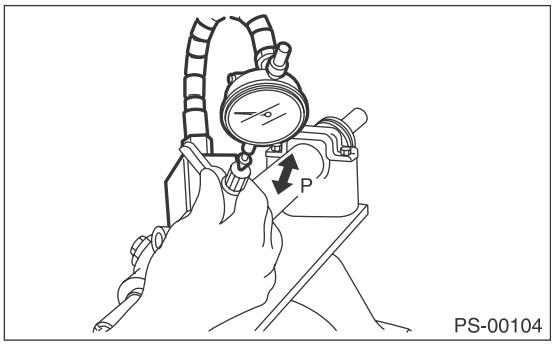

5. TURNING RESISTANCE OF GEARBOX

Using the ST, measure the gearbox turning resistance.

ST 34099PA100 SPANNER

Service limit:

Maximum allowable resistance:

13 N (1.3 kgf, 2.9 lbf) or less

Difference between right and left turning resistance:

20% or less

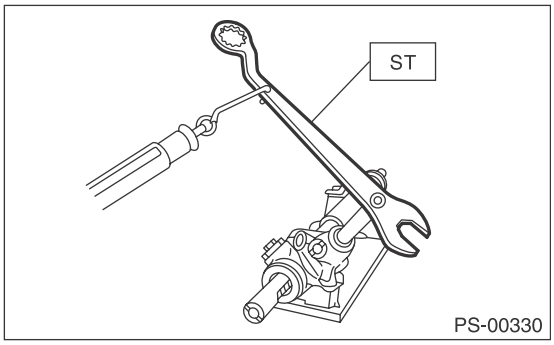

6. OIL LEAKAGE

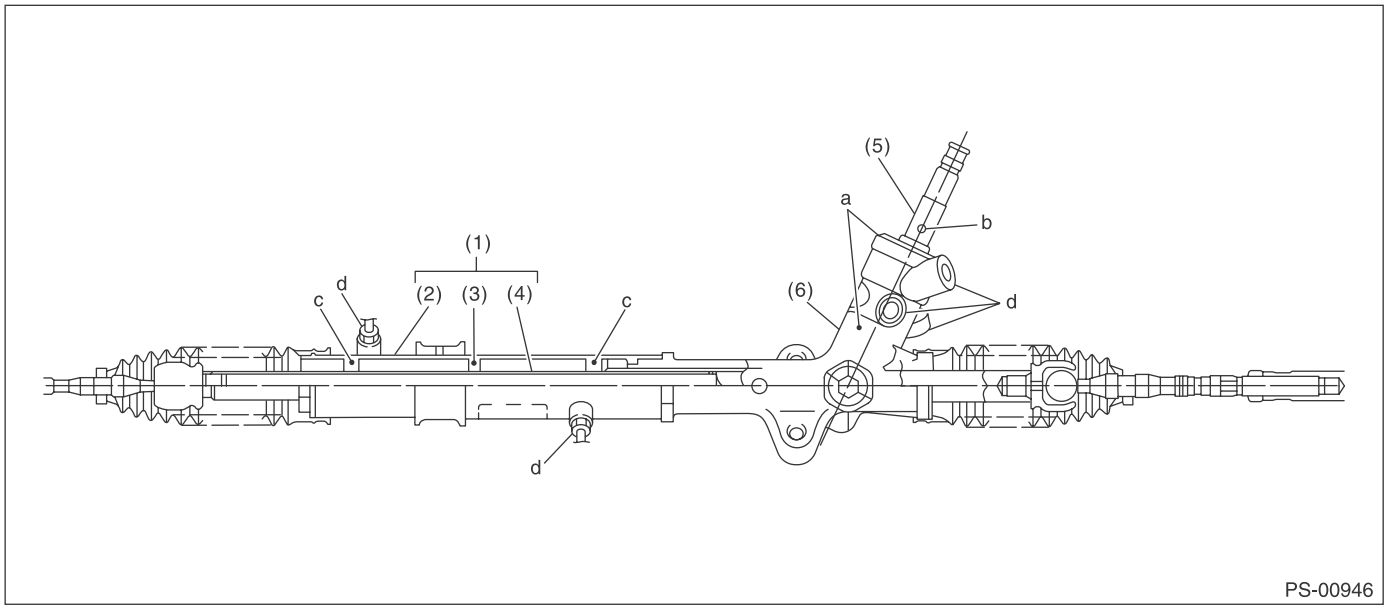

(1) Power cylinder
(2) Cylinder
(3) Rack piston
(4) Rack axle
(5) Input shaft
(6) Valve housing

1) Lift up the vehicle.
2) If a fluid leak is found, clean the fluid completely from the suspect area, and turn the steering wheel 30 to 40 times to the left and right from lock to lock, with the engine running, and check again for leaks immediately, and also after a few hours have passed.
3) Cause and solution for oil leakage from “a”
The oil seal is damaged. Replace the valve assembly with a new part.
4) Cause and measure for oil leakage from “b”.
The torsion bar O-ring is damaged. Replace the valve assembly with a new part.
5) Cause and measure for oil leakage from “c”.
The oil seal is damaged. Replace the oil seal.
6) Cause and solution for oil leakage from “d”.
The pipe is damaged. Replace the faulty pipe or O-ring.

F: ADJUSTMENT

1. GEARBOX BACKLASH ADJUSTMENT (SERVICING ON VEHICLE)

1) Using the ST, loosen the lock nut.
2) Loosen the adjusting screw using ST, and apply liquid gasket to the entire area of the adjusting screw threads.
ST 34199AJ000 SPECIAL TOOL CPS LHD

Liquid gasket:
THREE BOND 1141 (Part No. 004403006)

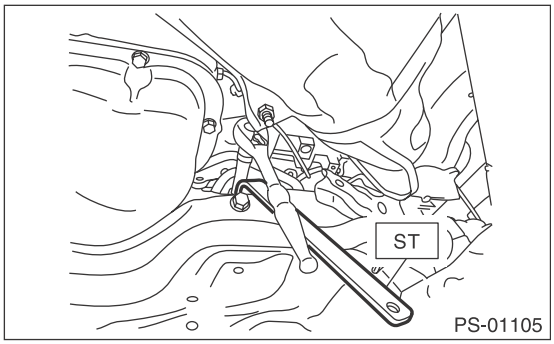

3) Tighten the adjusting screw to the specified torque, then loosen it.

Tightening torque:
9.8 N·m (1.0 kgf-m, 7.2 ft-lb)
4) Tighten the adjusting screw to the specified torque, then loosen it.

Tightening torque:
4.9 N·m (0.5 kgf-m, 3.6 ft-lb)
5) Tighten the adjusting screw to the specified torque, then loosen it approx. 30°.

CAUTION:
Do not loosen by 37° or more.

Tightening torque:
4.9 N·m (0.5 kgf-m, 3.6 ft-lb)
6) Install the lock nut. While holding the adjusting screw, tighten the lock nut using ST.

Tightening torque (lock nut):
39 N·m (4.0 kgf-m, 28.9 ft-lb)

NOTE:
While tightening the lock nut, hold the adjusting screw not to rotate.

2. FRONT WHEEL ALIGNMENT ADJUSTMENT

1) Adjust the front toe.
<Ref. to FS-12, FRONT WHEEL TOE-IN, INSPECTION, Wheel Alignment.>
2) Adjust the steering angle of the wheels.

Standard of steering angle:

Model	Inner wheel	Outer wheel
225/50R17 tire	37.4°±1.5°	33.0°±1.5°
225/45R18 tire	37.4°±1.5°	33.0°±1.5°
215/50R17 tire	37.6°±1.5°	33.3°±1.5°
205/60R16 tire	37.6°±1.5°	33.3°±1.5°
225/60R17 tire	38.4°±1.5°	34.1°±1.5°
215/70R16 tire	38.4°±1.5°	34.1°±1.5°

3) If the steering wheel spokes are not horizontal when wheels are set in the straight ahead position, or error is more than 5° on the periphery of the steering wheel, correctly re-install the steering wheel.

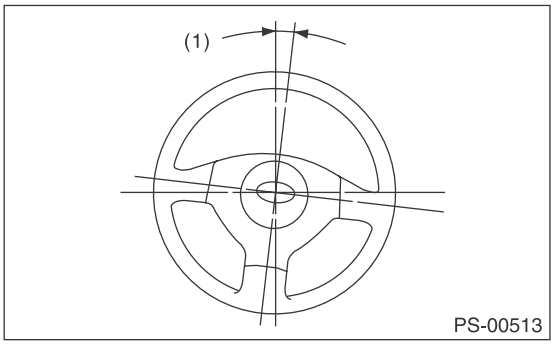

(1) 5° or less

4) If the steering wheel spokes are not horizontal with vehicle set in the straight ahead position after this adjustment, correct it by turning the right and left tie-rods in the opposite direction from each other by the same angle. Also check that there are no abnormal steering force, failure of the steering wheel to return or other faults.

6. Pipe Assembly

A: REMOVAL

1) Set the vehicle on a lift.
2) Remove the power steering hose bracket and power steering hose.
   (1) Remove the clip and disconnect the hose from the pipe.
   (2) Remove the power steering hose bracket.

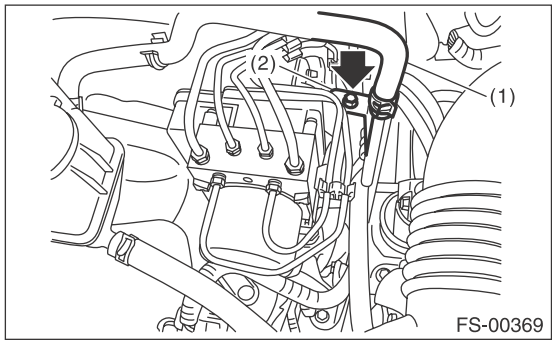

(1) Power steering hose
(2) Power steering hose bracket

   (3) Remove the hose from power steering pump.

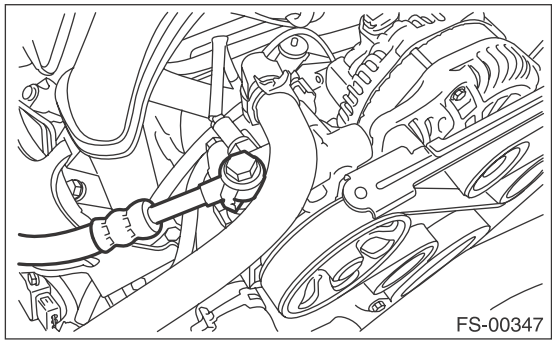

NOTE:
Plug the removed hose and pipe to prevent foreign matter from entering.
3) Lift up the vehicle and remove the under cover.
4) Disconnect the hose assembly from steering gearbox.

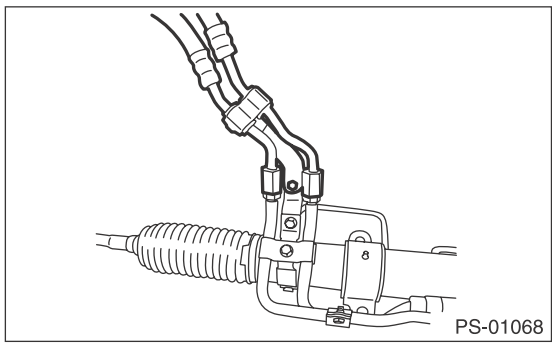

B: INSTALLATION

1) Install in the reverse order of removal.

Tightening torque:
<Ref. to PS-5, HOSE AND TANK, COMPONENT, General Description.>

2) Fill with recommended power steering fluid and perform air bleeding. <Ref. to PS-47, Power Steering Fluid.>

CAUTION:
Never start the engine before filling with fluid; otherwise the vane pump may become seized.

C: INSPECTION

Check all disassembled parts for wear, damage or other problems. Repair or replace the defective parts as necessary.

Part	Maintenance parts	Corrective action
Pipe	• O-ring fitting surface damage • Nut damage • Pipe damage	Replace with a new part.
Clamp	• Loose clamps	Replace with a new part.
Hose	• Flare surface damage • Flare nut damage • Outer surface cracks • Outer surface wear • Clip damage • End coupling or adapter deformation	Replace with a new part.

CAUTION:
Although the surface layer materials of rubber hoses have excellent weathering resistance, heat resistance and resistance for low temperature brittleness, they are likely to be damaged chemically by brake fluid, battery electrolyte, engine oil and automatic transmission fluid and their service lives are to be very shortened. Wipe off hoses immediately if any of these come into contact with the hoses.
Since resistances for heat or low temperature brittleness are gradually declining according to time accumulation of hot or cold conditions for the hoses and their service lives are shortening accordingly, it is necessary to perform careful inspection frequently when the vehicle is used in hot weather areas, cold weather areas and a driving condition in which many steering operations are required in short time.
Continuous discharge of the relief valve for 5 seconds or more will reduce the service lives of hoses, oil pump, fluid, etc., due to over heating.

Trouble	Possible cause	Corrective action
Pressure hose burst	Excessive holding time of relief status	Instruct customers.
	Malfunction of the relief valve	Replace the oil pump.
	Poor cold characteristic of fluid	Replace fluid.
Disconnection of the return hose	Improper connection	Repair.
	Loosening of the clip	Retighten.
	Poor cold characteristic of fluid	Replace fluid.
Fluid slightly leaking out of hose	Wrong layout, tensioned	Replace the hose.
	Excessive play of engine due to deterioration of engine mounting rubber	Replace the parts if defective.
	Improper stop position of pitching stopper	Replace the parts if defective.
Crack on hose	Excessive holding time of relief status	Replace. Instruct customers.
	Excessive tightening torque for return hose clip	Replace.
	Power steering fluid, engine oil, electrolyte adhere on the hose surface	Replace. Be careful during service work.
	Too many uses in extremely cold weather	Replace. Instruct customers.

NOTE:
There are conditions in which a fluid leak is diagnosed, but is not actually leaking. This is because the fluid spilt during the last maintenance was not completely wiped off. Be sure to wipe off spilt fluid thoroughly after maintenance.

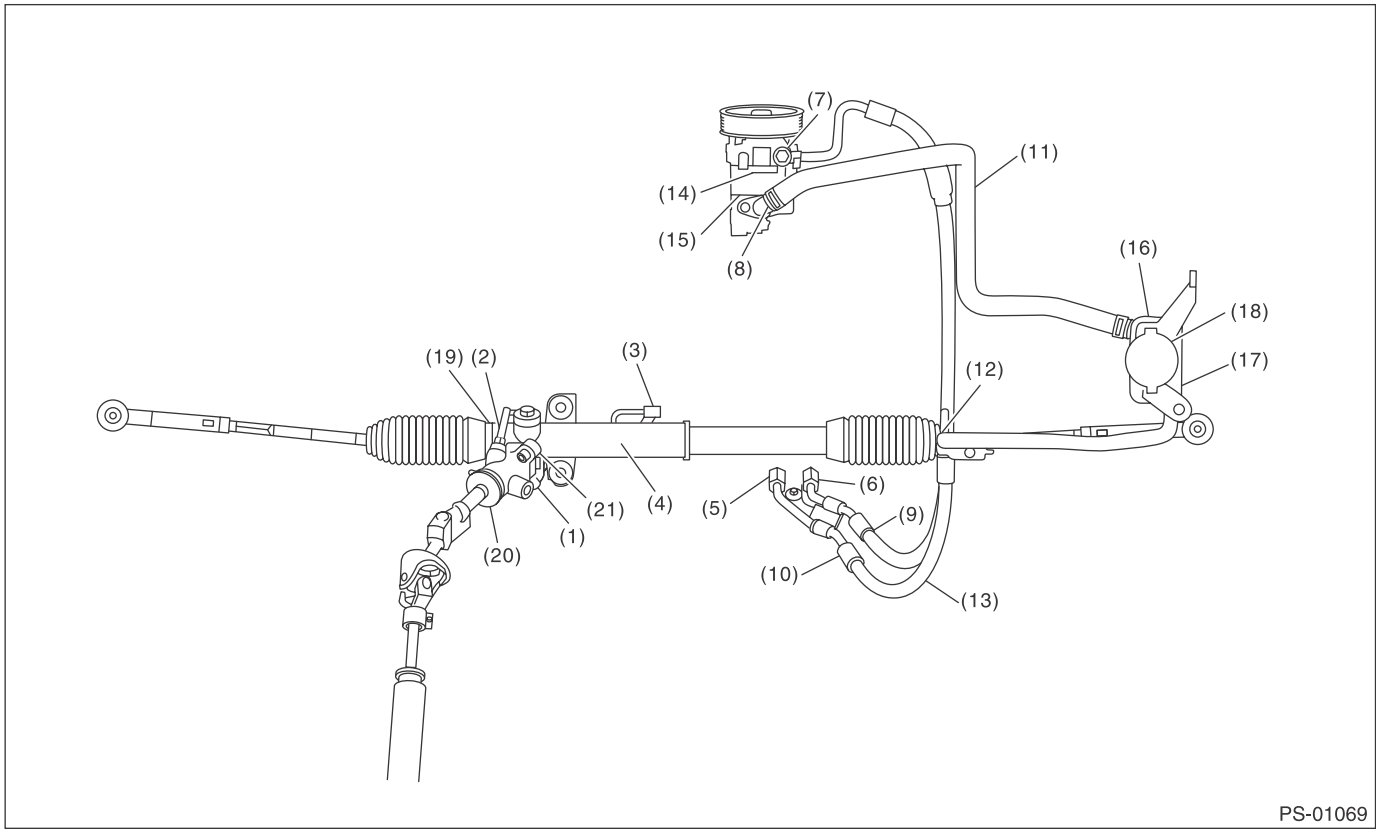

Fluid leaking area	Possible cause	Corrective action
Leakage from the connections of pipes and hoses, numbered (1) through (8) in the figure	Insufficient tightening of flare nut, adhesion of dirt, damage to flare or flare nut or eye bolt	Loosen and retighten. Replace if ineffective.
	Improper installation of hose or clamp	Retighten or replace the clamp.
	Damaged O-ring or gasket	Replace the O-ring, gasket pipe or hose with new part, if still no improvement, replace the gearbox as well.
Leakage from hose (9) through (13) in the figure	Crack or damage in hose	Replace with a new part.
	Crack or damage in hose hardware	Replace with a new part.
Leakage from surrounding of cast iron portion of oil pump, (14) and (15) in the figure	Damaged O-ring	Replace the oil pump.
	Damaged gasket	Replace the oil pump.
Leakage from oil tank, (16) and (17) in the figure	Crack in oil tank	Replace the oil tank.
Leakage from filler neck of (18)	Damaged cap gasket	Replace the cap.
	Crack in root of filler neck	Replace the oil tank.
	Fluid level too high	Adjust the fluid level.
Leakage from power cylinder of gearbox area (19) in the figure	Damaged oil seal	Replace the oil seal.
Leakage from (20), (21) in the figure and control valve of gearbox	Damaged gasket or oil seal	Replace the problem parts.
	Damage in control valve	Replace the control valve.

7. Oil Pump

A: REMOVAL

1) Disconnect the ground cable from battery.
2) Remove the V-belts. <Ref. to ME(H4SO)-42, REMOVAL, V-belt.>
3) Disconnect the connector from power steering pump switch.
4) Disconnect the pressure hose and suction hose from the oil pump.

CAUTION:
• Do not allow fluid to come into contact with the pulley belt.
• Plug the ends of the hose and pipe to prevent foreign matter from entering.

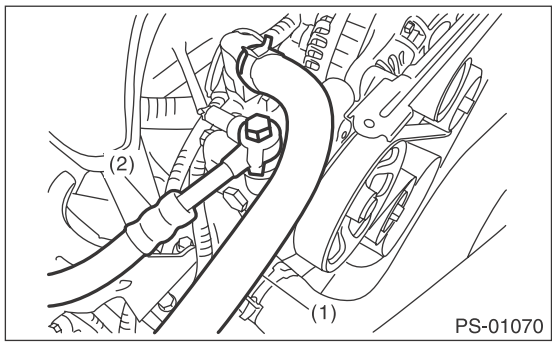

(1) Suction hose
(2) Pressure hose

5) Remove the installation bolt of the power steering pump bracket.

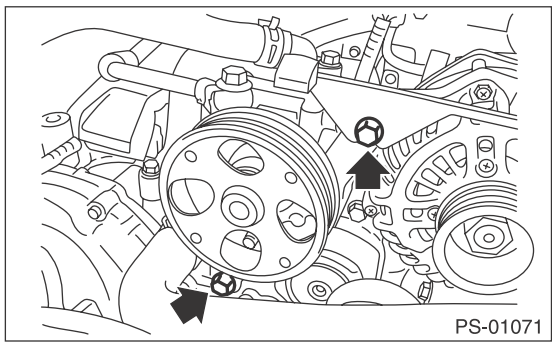

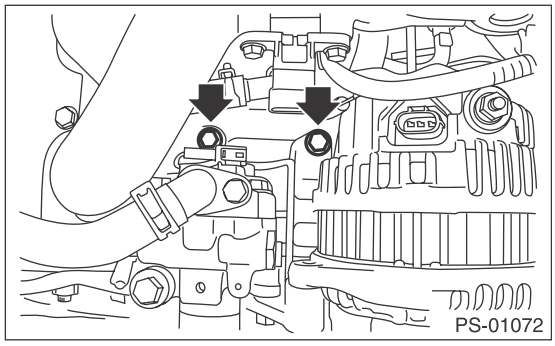

6) Secure the oil pump bracket on a vise and remove the bolts from front and back of the oil pump.

CAUTION:
When securing the oil pump bracket in a vice, hold the oil pump bracket with the least possible force between two pieces of wood.

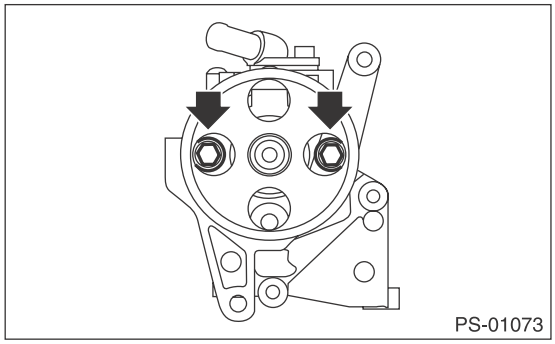

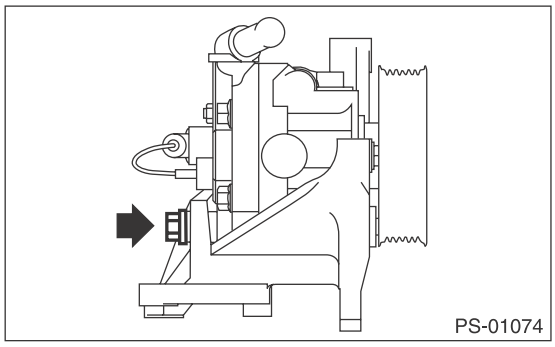

7) Remove the oil pump from the bracket.

B: INSTALLATION

1) Install the oil pump to bracket.

Tightening torque:
16 N·m (1.6 kgf-m, 11.8 ft-lb)

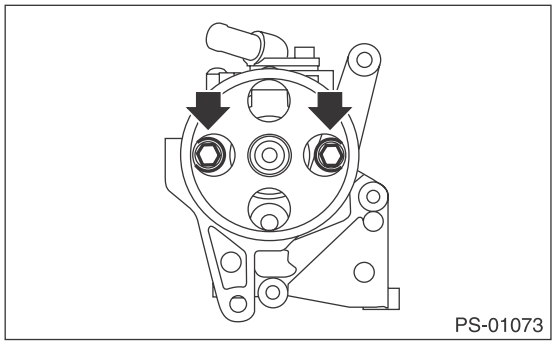

Tightening torque:
36 N·m (3.7 kgf-m, 26.6 ft-lb)

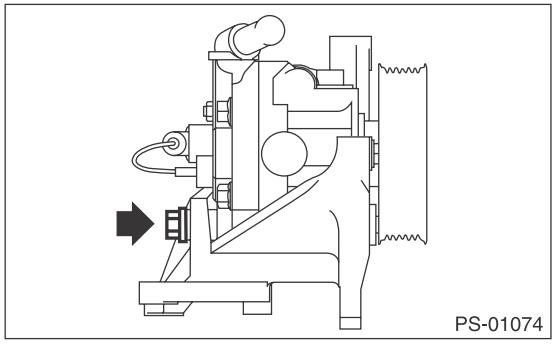

2) Install the power steering pump bracket.

Tightening torque:
<Ref. to PS-7, OIL PUMP, COMPONENT, General Description.>

3) After installing the oil pump, fill the oil pump with fluid while rotating the pulley by hand and bleed the air from the oil pump.

CAUTION:
Always fill the oil pump with the fluid to prevent abnormal noise and seizure of the oil pump.

4) Connect the pressure hose and suction hose.

Tightening torque:
Eye bolt
40 N·m (4.1 kgf-m, 29.5 ft-lb)

CAUTION:
Be careful when installing; If the hose is twisted it may come into contact with other parts.

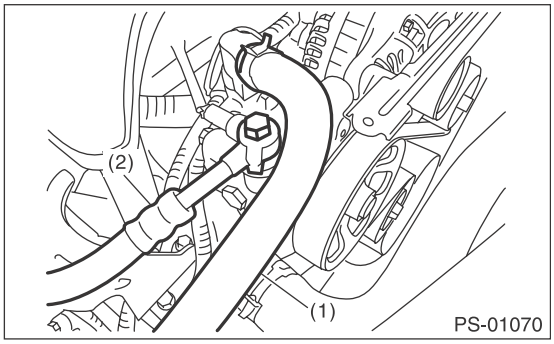

(1) Suction hose
(2) Pressure hose

5) Connect the connector to the power steering pump switch.
6) Install the V-belts. <Ref. to ME(H4SO)-42, INSTALLATION, V-belt.>
7) Connect the ground cable to battery.
8) Fill with recommended power steering fluid and perform air bleeding. <Ref. to PS-47, Power Steering Fluid.>

CAUTION:
Never start the engine before filling with fluid; otherwise the vane pump may become seized.

C: INSPECTION

1. BASIC INSPECTION

Perform the following inspection procedures and replace faulty parts.

No.	Parts	INSPECTION	Corrective action
1	Oil pump (Exterior)	(1) Crack, damage or oil leakage	Replace the oil pump with a new part.
		(2) Play of pulley shaft	Measurement of play of bend direction and play of axis direction If any of these exceeds the service limit, replace the oil pump with a new part.
2	Pulley	(1) Damage	Replace with a new part.
		(2) Bend	Measure the V groove deflection. If it exceeds the service limit, replace the pulley with a new part.
3	Oil pump (Interior)	(1) Faulty or seized of vane pump	Check the rotating resistance of pulley. If it exceeds the service limit, replace the oil pump with a new part.
		(2) Bend in the shaft or damage to bearing	If the a string is wrapped on the pulley and rotated, and the oil pump emits a noise that is markedly different in tone and loudness from a sound of a new oil pump, replace the oil pump with a new part.
4	O-ring	Cracking or deterioration	Replace with a new part.
5	Bracket	Crack	Replace with a new part.

2. SERVICE LIMIT

Make a measurements as follows. If it exceeds the service limit, replace with a new part.

CAUTION:
• When securing the oil pump on a vise, hold the oil pump with the least possible force between two pieces of wood.
• Do not pinch the outer portion of flow control valve or pulley portion with a vise. Otherwise this may cause deformation of outer portion and pulley. Select properly sized wood pieces.

1) Play of the pulley shaft

Condition:
P: When applying a force of 9.8 N (1.0 kgf, 2.2 lbf)

Service limit:
Play in the radial direction (Direction ⬅ ➡)
0.4 mm (0.016 in) or less

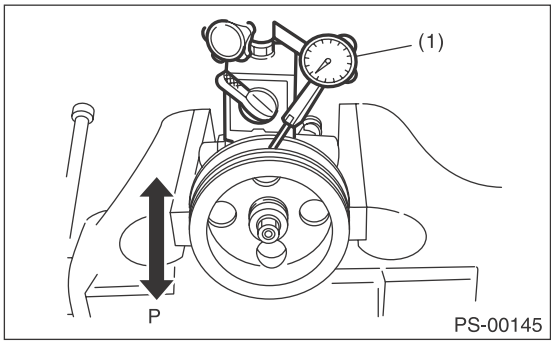

(1) Dial gauge

Axial play (Direction ⇦ ⇨)
0.9 mm (0.035 in) or less

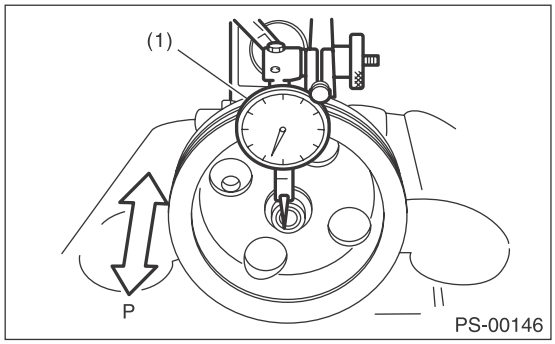

(1) Dial gauge

2) Deflection of the pulley groove

Service limit:
1.0 mm (0.039 in) or less

NOTE:
Read the value on one surface of V groove, set the dial gauge on the other surface, and read the value of the dial gauge.

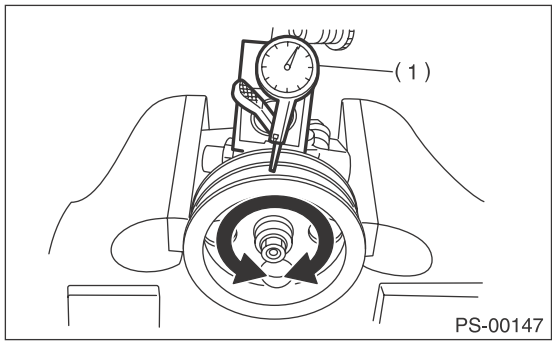

(1) Dial gauge

3) Rotating resistance of pulley

Service limit:
Maximum load; 9.22 N (0.94 kgf, 2.07 lbf) or less

NOTE:
• A rather higher value may be indicated when pulley starts turning.
• Measure the load during rotation to make a judgement.

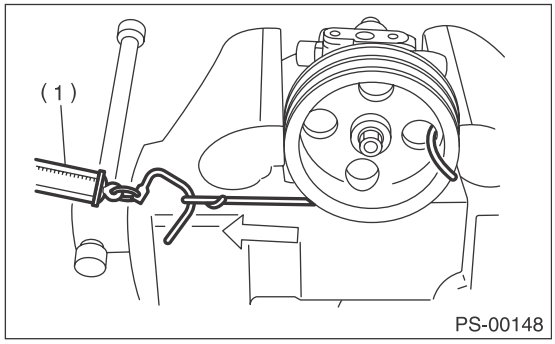

(1) Spring scale

3. HYDRAULIC PRESSURE

NOTE:
• To measure hydraulic pressure correctly, be sure to complete all the items in “INSPECTION”, prior to performing the measurement. <Ref. to PS-48, INSPECTION, General Diagnostic Table.>
• Do not leave the valve of pressure gauge closed or hold the steering wheel at lock for 5 seconds or more in any case, this can damage the oil pump.
• Before attaching a pressure gauge, place cloth at locations where fluid is expected to spill. Wipe off any spilt fluid completely after the measurement.

1) Regular pressure measurement
(1) Connect the ST1, ST2 and ST3.

ST1	925711000	PRESSURE GAUGE
ST2	34099AC020	ADAPTER HOSE B
ST3	34099AC010	ADAPTER HOSE A

(2) Remove the air intake duct.
(3) Disconnect the pipe C from pump.
(4) Using the gasket (Part No. 34621AC021) and bolt (Part No. 34620AC010), attach the ST2 to pump instead of pressure hose.

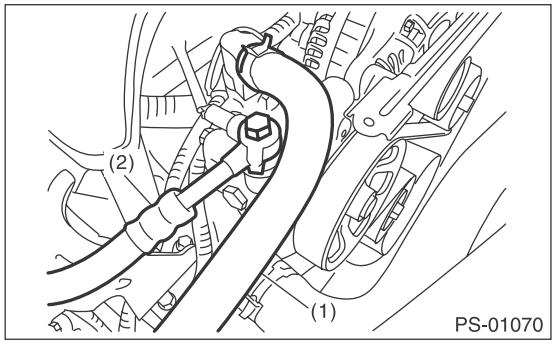

(1) Suction hose
(2) Pressure hose

(5) Attach the ST3 to the end of pressure hose which is removed from pump.
(6) Replenish power steering fluid up to the specified level.
(7) Open the valve, and start the engine.
(8) Measure the regular pressure.

ST1	925711000	PRESSURE GAUGE
ST2	34099AC020	ADAPTER HOSE B
ST3	34099AC010	ADAPTER HOSE A

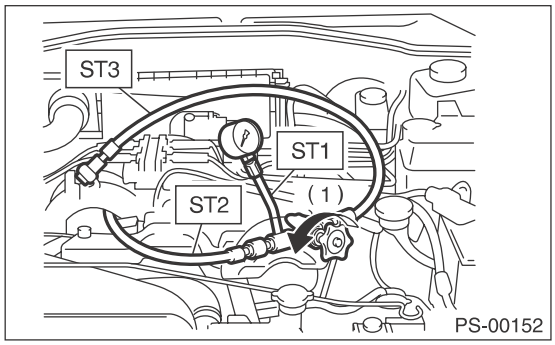

(1) Valve

Service limit:
981 kPa (10 kgf/cm^2, 142 psi) or less

(9) If it is not within the specification, replace the problem part for the following problems. (Pipe or hose clogged, leaks from fluid line, and mixture of foreign matter in fluid line)

2) Measure the relief pressure.
(1) Using the STs, measure the relief pressure.
(2) Close the valve.

(3) Measure the relief pressure.

ST1	925711000	PRESSURE GAUGE
ST2	34099AC020	ADAPTER HOSE B
ST3	34099AC010	ADAPTER HOSE A

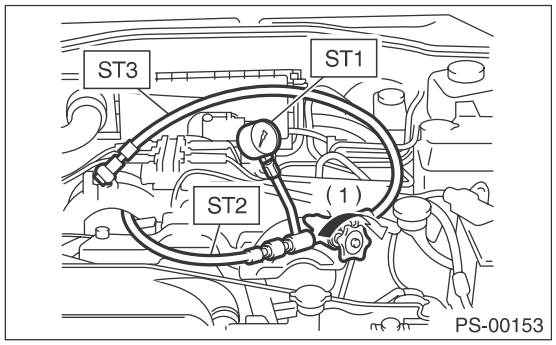

(1) Valve

Service limit:
H4 NA model:
8,300 — 9,000 kPa (85 — 92 kgf/cm^2, 1,203 — 1,305 psi)
H6, turbo model:
8,900 — 9,600 kPa (91 — 98 kgf/cm^2, 1,290 — 1,392 psi)

(4) If it is not within the specification, replace the oil pump.

3) Measure the working pressure.
(1) Using the ST, measure the working pressure.
(2) Open the valve.
(3) Measure the working pressure of control valve by turning steering wheel from stop to stop.

ST1	925711000	PRESSURE GAUGE
ST2	34099AC020	ADAPTER HOSE B
ST3	34099AC010	ADAPTER HOSE A

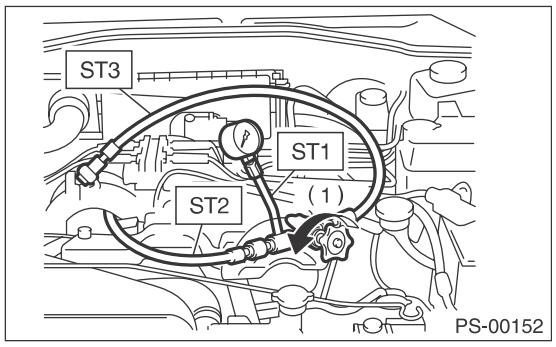

(1) Valve

Service limit:
H4 NA model:
8,300 — 9,000 kPa (85 — 92 kgf/cm^2, 1,203 — 1,305 psi)
H6, turbo model:
8,900 — 9,600 kPa (91 — 98 kgf/cm^2, 1,290 — 1,392 psi)

(4) If it is out of specification, measure the steering effort. <Ref. to PS-51, MEASUREMENT OF STEERING EFFORT, INSPECTION, General Diagnostic Table.> If it is not within specification, replace the control valve itself or control valve and pinion as a single unit, using new parts.

8. Reservoir Tank

A: REMOVAL

1) Drain fluid from the reservoir tank.
2) Disconnect the hose from reservoir tank.

CAUTION:
Plug the ends of the hose and pipe to prevent foreign matter from entering.

3) Remove the reservoir tank from the body.

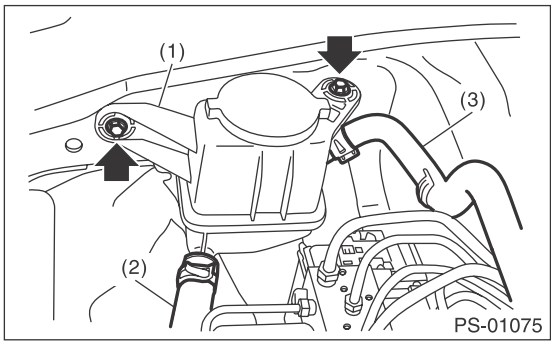

(1) Reservoir tank
(2) Suction hose
(3) Return hose

B: INSTALLATION

1) Install the reservoir tank to the body.

Tightening torque:
13 N·m (1.3 kgf-m, 9.6 ft-lb)

2) Connect the hose to the reservoir tank.

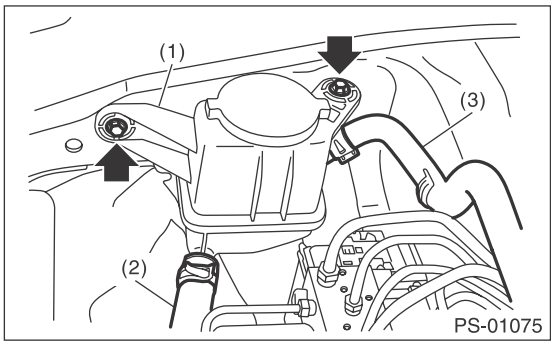

(1) Reservoir tank
(2) Suction hose
(3) Return hose

3) Replenish power steering fluid up to the specified level. <Ref. to PS-47, INSPECTION, Power Steering Fluid.>

C: INSPECTION

Check the reservoir tank for cracks, breakage or damage. If a failure is found, replace the reservoir tank.

9. Power Steering Fluid

A: SPECIFICATION

Recommended power steering fluid
SUBARU ATF or DEXRON III

B: INSPECTION

1) Check the power steering fluid for deterioration or contamination. If the fluid is highly deteriorated or contaminated, drain it and refill with new fluid.
2) Check the joints and units for oil leakage. If any oil leaks are found, repair or replace the applicable part.
3) Inspect the fluid level of reservoir tank with vehicle on level surface and engine stopped.
If the level is at “MIN.” point or below, add fluid to keep the level in the specified range of the indicator. If fluid level is at “MAX.” point or above, drain fluid by using a syringe or the like.
(1) Check at power steering fluid temperature 20°C (68°F); read the fluid level on the “COLD” side.
(2) Check at power steering fluid temperature 80°C (176°F); read the fluid level on the “HOT” side.

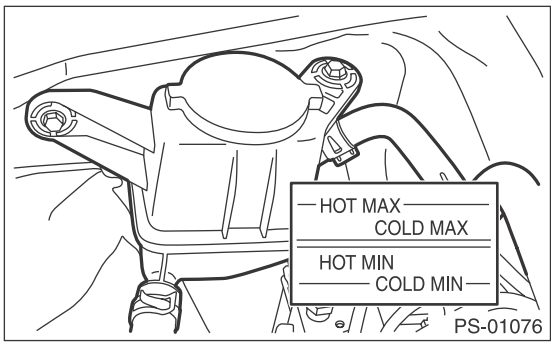

C: REPLACEMENT

1) Lift up the vehicle.
2) Drain the power steering fluid.
3) Add the specified fluid to reservoir tank at “MAX” level.
4) Maintaining the fluid level of Step 3), continue to turn the steering wheel slowly from lock to lock until the bubbles stop appearing on oil surface.
5) If the steering wheel is turned in a low fluid level condition, air will be sucked into the pipe. If air has entered, leave it for about half an hour and then repeat step 4) again.
6) Start the engine and let it idle.
7) Continue to turn the steering wheel slowly from lock to lock again until the bubbles stop appearing on oil surface, while keeping the fluid at the level in Step 3).
Normally bubbles will stop appearing after turning the steering wheel from lock to lock three times.
8) In case bubbles do not stop appearing in the tank, leave it for about half an hour and then repeat step 3) again.
9) Lower the vehicle, and then idle the engine.
10) Continue to turn the steering wheel from lock to lock until the bubbles stop appearing and change of the fluid level is within 3 mm (0.12 in).
11) In case the following happens, leave it about half an hour and then do step 7) to 10) again.
(1) The fluid level changes by 3 mm (0.12 in) or more.
(2) Bubbles remain on the upper surface of the fluid.
(3) Grinding noise is generated from oil pump.
12) Check the fluid leakage after turning steering wheel from lock to lock with engine running.

10.General Diagnostic Table

A: INSPECTION

Trouble	Possible cause	Corrective action
• Steering effort is heavy in all ranges. • Steering effort is heavy at stand still. • Steering wheel vibrates when turning.	1. Pulley belt • Unequal length of pulley belts • Contact with oil or grease • Looseness or damage of the pulley belt • Poor uniformity of the pulley belt cross section • Pulley belt touches to pulley bottom • Poor revolution of pulleys (except oil pump pulley) • Poor revolution of oil pump pulley	Adjust or replace.
	2. Tire and wheel • Improper tire out of specification *1 • Improper wheel out of specification *1 • Tires not properly inflated	Replace or reinflate.
	3. Fluid • Low fluid level • Air entry in fluid • Dust entry in fluid • Fluid deterioration • Insufficient warming up for fluid *2	Refill, bleed air, replace or instruct customer.
	4. Idle speed • Lower idle speed • Excessive drop of idle speed at engine start or steering wheel turning *3	Adjust or instruct customer.
	5. Measure the hydraulic pressure. <Ref. to PS-43, INSPECTION, Oil Pump.>	Replace the problem parts.
	6. Measure the steering wheel effort. <Ref. to PS-51, MEASUREMENT OF STEERING EFFORT, INSPECTION, General Diagnostic Table.>	Adjust or replace.
• Vehicle leads to one side or the other. • Returning force of steering wheel to center is poor. • Steering wheel vibrates when turning.	1. Fluid line • Folded hose • Flattened pipe	Repair or replace.
	2. Tire and wheel • Flat tire • Mixed use of different tires • Mixed use of different wheels • Abnormal wear of tire • Unequal tread remaining • Unequal pressure of tire	Adjust, fix or replace.
	3. Front alignment • Improper or unequal caster • Improper or unequal toe-in • Loose suspension connections	Adjust or retighten.
	4. Others • Damaged joint assembly • Unbalanced height • Unbalanced weight	Replace, adjust or instruct customer.
	5. Measure the steering wheel effort. <Ref. to PS-51, MEASUREMENT OF STEERING EFFORT, INSPECTION, General Diagnostic Table.>	Adjust or replace.

*1 When the width of tires or wheels is wider than standard, power steering system load increases. Accordingly, in a condition, for example before fluid warms-up, relief valve may work before reaching maximum turning angle. In this case, steering effort may be heavy. When the measured hydraulic pressure is normal, there is no abnormal thing.
*2 In cold season, fluid becomes cool and the steering effort gets heavy due to increased resistance. After warming-up engine, turn the steering wheel from stop to stop several times to warm up fluid. If steering effort reduces normally, function is normal.
*3 In cold season or with insufficient warm up of engine, an excessive drop of the idling causes heavy steering effort. In this case, start the vehicle with increasing engine speed than usual. If steering effort reduces normally, function is normal.

1. NOISE AND VIBRATION

CAUTION:
Do not keep the relief valve operated for five seconds or more at any time or inner parts of the oil pump may be damaged due to rapid increase of fluid temperature.

NOTE:
• A screeching noise may be heard immediately after the engine start in extremely cold conditions. In this case, if the noise goes off during warm up there is no abnormal function in the system. This is due to the fluid characteristics in extremely cold condition.
• The oil pump normally makes a small whining noise due to its mechanism. Even if a noise is heard when steering wheel is turned at stand still, there is no abnormal function in the system provided that the noise eliminates when the vehicle is driving.
• When turning the steering wheel with the brake applied when the vehicle is parked, a screeching noise may be generated by the brake disc and pads. This is not a fault in the steering system.
• There may be a small vibration around the steering devices when turning the steering wheel at standstill, even though the component parts are operating properly.
Hydraulic systems are likely to generate this kind of vibration as well as working noise and fluid noise because of combined conditions, i.e., road surface and tire surface, engine speed and turning speed of steering wheel, fluid temperature and braking condition.
These conditions do not indicate a problem in the system.
Confirm vibration for an AT model, by applying the parking brake on a concrete surface, shifting into the “D” range, and turning the steering wheel repeatedly from slow to rapid, step by step.

Trouble	Possible cause	Corrective action
Hiss noise (continuous) While engine is running.	Relief valve emits operating sound when steering wheel is completely turned in either direction. (Do not keep this condition for 5 seconds or more.)	Normal operation
	Relief valve emits operating sound when steering wheel is not turned. This means that the relief valve is defective.	Replace the oil pump.
Rattling noise (intermittent) While engine is running.	Interference with adjacent parts	Check the parts for deformation. Replace or correct if necessary.
	Loosened installation of oil pump, oil tank, pump bracket, gearbox or crossmember	Retighten.
	Loose oil pump pulley or other pulley(s)	Retighten.
	Looseness of linkage, play of steering, improper tightening (looseness) of suspension joint or steering column	Retighten or replace.
	Sound generates from the inside of gearbox or oil pump.	Replace faulty parts in the gearbox or oil pump.
Knocking When turning steering wheel in both directions with small angle repeatedly at engine ON or OFF.	Excessive backlash Loosened lock nut for adjusting backlash	Adjust and retighten.
	Insufficient tightening or play in the tie-rod or tie-rod end	Retighten or replace.
Grinding noise (continuous) While engine is running.	Air in vane pump	Inspect and retighten the fluid line connection. Refill the fluid and vent air.
	Vane pump seizing	Replace the oil pump.
	Oil pump pulley bearing seized	Replace the oil pump.
	Folded hose, flattened pipe	Replace.
Squeal, squeak (intermittent or continuous) While engine is running.	Improper adjustment of pulley belt Damaged or over tensioned pulley belt Unequal length of pulley belts	Adjust or replace.
	Runout or dirty V-groove surface of oil pump pulley	Clean or replace.

Trouble	Possible cause	Corrective action
Sizzling noise (continuous) While engine is running.	Fluid aeration	Fix the faulty part causing aeration. Replace the fluid and vent air.
	Damaged pipe of gearbox	Replace the pipe.
	Faulty inside of hose or pipe Flattened hose or pipe	Repair or replace.
	Abnormal inside of oil tank	Replace.
	Removed oil tank cap	Install cap.
Whistle (continuous) While engine is running.	Faulty pipe of gearbox or faulty hose	Replace the faulty parts of the gearbox or the hose.
Whine or growl (intermittent or continuous) While engine is running with/ without steering turned.	Looseness of oil pump, oil pump bracket attachment	Retighten.
	Fault inside of oil pump or hose	Replace the oil pump or hose, if the noise can be heard when vehicle is running as well as being stopped.
	Torque converter growl, air conditioner compression growl	Remove the power steering pulley belt and check.
Grinding noise (continuous) When engine operates (when operating steering wheel)	Fault inside of gearbox	Replace the faulty parts of gearbox.
	Faulty steering shaft bearing	Apply grease or replace.
	Occurs when turning the steering wheel with brakes (service or parking) applied.	If the noise goes off when brake is released, it is normal.
Vibration While engine is running with/ without steering turned.	Engine speed is too low.	Adjust, and notify customer.
	Air in vane pump	Repair faulty part Vent air.
	Damaged valve in oil pump or gearbox	Replace the faulty parts in gearbox and oil pump.
	Excessive play in steering, looseness of suspension parts	Retighten.

2. MEASUREMENT OF STEERING EFFORT

	Step	Check	Yes	No
1	**CHECK STEERING EFFORT.** 1) Stop the vehicle on paved road. 2) Start the engine. 3) Run the engine at idle. 4) Install a spring scale on the steering wheel. 5) Pull the spring scale at a right angle to the steering wheel, and measure both right and left steering wheel efforts. 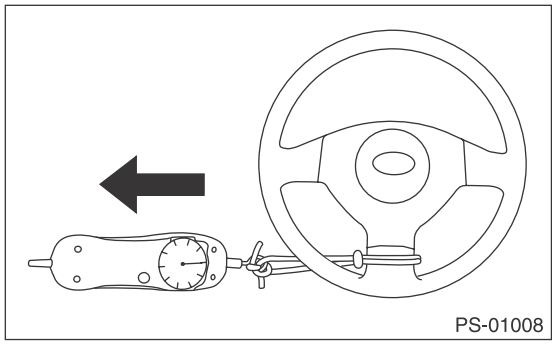 PS-01008 NOTE: When turning the steering more quickly than necessary from a direction to the other direction at an engine speed of 2,000 rpm or higher, steering effort may be heavy. This is caused by flow characteristic of the fluid in the oil pump and is not a defect.	Is the steering effort less than 29.4 N (3.0 kgf, 6.6 lbf)?	Go to step **2**.	Adjust the back-lash.
2	**CHECK STEERING EFFORT.** 1) Stop the engine. 2) Pull the spring scale at a right angle to the steering wheel, and measure both right and left steering wheel efforts.	Is the steering effort less than 294.2 N (30 kgf, 66.2 lbf)?	Go to step **3**.	Perform the inspection or adjustment around the suspension part.
3	**CHECK STEERING WHEEL EFFORT.** 1) Remove the universal joint. 2) Measure the steering wheel effort.	Is the steering effort less than 2.26 N (0.23 kgf, 0.51 lbf)?	Go to step **4**.	Check, adjust and replace if neces-sary.
4	**CHECK STEERING WHEEL EFFORT.** Measure the steering wheel effort.	Is the difference of steering effort between right and left less than 20%?	Go to step **5**.	Check, adjust and replace if neces-sary.
5	**CHECK UNIVERSAL JOINT.** Measure the swing torque of joint. (Yoke on steering column side) <Ref. to PS-19, INSPEC-TION, Universal Joint.>	Is the swing torque of the uni-versal joint less than 7.3 N (0.74 kgf, 1.64 lbf)?	Go to step **6**.	Replace with a new part.
6	**CHECK UNIVERSAL JOINT.** Measure the swing torque of joint. (Yoke on gearbox side) <Ref. to PS-19, INSPECTION, Universal Joint.>	Is the swing torque of the uni-versal joint less than 3.8 N (0.39 kgf, 0.86 lbf)?	Go to step **7**.	Replace with a new part.
7	**CHECK FRONT WHEEL.** Check the front wheels.	Does the front wheels have unsteady revolution or rattling, or does the brake drag?	Inspect, readjust and replace if nec-essary.	Go to step **8**.
8	**CHECK TIE-ROD ENDS.** Remove the tie-rod ends.	If the tie-rod ends of suspen-sion have unsteady revolution or rattling?	Inspect and replace if neces-sary.	Go to step **9**.
9	**CHECK BALL JOINT.** Remove the ball joint.	If the ball joints of suspension have unsteady revolution or rat-tling?	Inspect and replace if neces-sary.	Go to step **10**.

Step		Check	Yes	No
10	**CHECK GEARBOX.** Measure the rotating of gearbox. <Ref. to PS-35, TURNING RESISTANCE OF GEARBOX, INSPECTION, Steering Gearbox.>	Is the turn resistance of the steering gearbox less than 13 N (1.3 kgf, 2.9 lbf)? Is the difference between right and left sides less than 24%?	Go to step **11**.	Readjust the backlash, and if ineffective, replace the faulty parts.
11	**CHECK GEARBOX.** Measure the sliding of gearbox. <Ref. to PS-34, SERVICE LIMIT, INSPECTION, Steering Gearbox.>	Is the sliding resistance of the steering gearbox less than 314 N (32 kgf, 71 lbf)? Is the difference between the right and left sliding resistances less than 20 %?	Steering effort is normal.	Readjust the backlash, and if ineffective, replace the faulty parts.

BODY SECTION

This service manual has been prepared to provide SUBARU service personnel with the necessary information and data for the correct maintenance and repair of SUBARU vehicles.
This manual includes the procedures for maintenance, disassembling, reassembling, inspection and adjustment of components and diagnostics for guidance of experienced mechanics.
Please peruse and utilize this manual fully to ensure complete repair work for satisfying our customers by keeping their vehicle in optimum condition. When replacement of parts during repair work is needed, be sure to use SUBARU genuine parts.

All information, illustration and specifications contained in this manual are based on the latest product information available at the time of publication approval.

HVAC SYSTEM (HEATER, VENTILATOR AND A/C)	AC
HVAC SYSTEM (AUTO A/C) (DIAGNOSTICS)	AC(diag)
AIRBAG SYSTEM	AB
AIRBAG SYSTEM (DIAGNOSTICS)	AB(diag)
OCCUPANT DETECTION SYSTEM (DIAGNOSTICS)	OD(diag)
SEAT BELT SYSTEM	SB
LIGHTING SYSTEM	LI
WIPER AND WASHER SYSTEMS	WW
ENTERTAINMENT	ET
COMMUNICATION SYSTEM	COM
GLASS/WINDOWS/MIRRORS	GW
BODY STRUCTURE	BS
INSTRUMENTATION/DRIVER INFO	IDI
SEATS	SE
SECURITY AND LOCKS	SL
SUNROOF/T-TOP/CONVERTIBLE TOP (SUNROOF)	SR
EXTERIOR/INTERIOR TRIM	EI

FUJI HEAVY INDUSTRIES LTD.

G2460BE7

BODY SECTION

EXTERIOR BODY PANELS	EB
CRUISE CONTROL SYSTEM	CC
CRUISE CONTROL SYSTEM (DIAGNOSTICS)	CC(diag)
IMMOBILIZER (DIAGNOSTICS)	IM(diag)
LAN SYSTEM (DIAGNOSTICS)	LAN(diag)
BODY CONTROL SYSTEM (DIAGNOSTICS)	BC(diag)

HVAC SYSTEM (HEATER, VENTILATOR AND A/C)

AC

		Page
1.	General Description	2
2.	Refrigerant Pressure with Manifold Gauge Set	17
3.	Refrigerant Recovery Procedure	18
4.	Refrigerant Charging Procedure	19
5.	Refrigerant Leak Check	22
6.	Relay and Fuse	23
7.	Compressor Oil	24
8.	Blower Motor Unit Assembly	25
9.	Blower Motor	29
10.	Power Transistor (Auto A/C Model)	31
11.	Blower Resistor (Manual A/C Model)	32
12.	Heater Core	34
13.	Control Panel	39
14.	Control Unit	46
15.	Compressor	47
16.	Condenser	50
17.	Heater and Cooling Unit	54
18.	Evaporator	57
19.	Hose and Pipe	65
20.	Pressure Sensor	67
21.	Ambient Sensor (Auto A/C Model)	68
22.	Sunload Sensor (Auto A/C Model)	69
23.	In-Vehicle Sensor (Auto A/C Model)	71
24.	Air Vent Grille	73
25.	Heater Duct	77
26.	Heater Vent Duct	78
27.	A/C Filter	79
28.	General Diagnostic Table	81

1. General Description

A: SPECIFICATION

1. HEATER SYSTEM

Item		Specification	Condition
Heating capacity		4.8 kW (4,127 kcal/h, 16,377 BTU/h) or more	• Air flow control switch: FOOT • Temperature control switch (Auto A/C): FULL HOT • Temperature control dial (Manual A/C): FULL HOT • Temperature difference between hot water and inlet air: 65°C (149°F) • Hot water flow rate: 300 ℓ (79.3 US gal, 66 Imp gal)/h
Air flow rate		300 m^3 (10,596 cu ft)/h	FOOT mode (FRESH), FULL HOT at 12.5 V
Max air flow rate		495 m^3 (17,483 cu ft)/h	• Temperature control switch (Auto A/C): FULL COLD • Temperature control dial (Manual A/C): FULL COLD • Airflow adjustment switch (AUTO A/C): MAX (6th position) • Airflow adjustment dial (Manual A/C): MAX (4th position) • FRESH/RECIRC switch: RECIRC
Heater core size (height × length × width)		264 × 100 × 27 mm (10.4 × 3.94 × 1.06 in)	—
Blower motor	Type	Magnet motor 260 W or less	12 V
	Fan type and size (diameter × width)	Sirocco fan type 150 × 75 mm (5.91 × 2.95 in)	—

2. A/C SYSTEM

Item			Specification
Type of air conditioner			Reheat air-mix type
Cooling capacity			4.18 kW [at 500 m^3 (17,660 cu ft)/h] (3,594 kcal/h, 14,262 BTU/h)
Refrigerant			HFC-134a (CH_2FCF_3) [0.425±0.025 kg (0.94±0.06 lb)]
Compressor		Type	Swash plate, variable capacity (TSE14C)
		Discharge	140.6 cc (8.58 cu in)/rev
		Max. permissible speed	6,000 rpm
Pulley		Type of belt	V-belt 6 PK
		Pulley dia. (effective dia.)	110 mm (4.33 in)
		Pulley ratio	H4 model: 1.21 H6 model: 1.30
Condenser		Type	Corrugated fin (Sub cool type)
		Core face area	0.186 m^2 (2.002 sq ft)
		Core thickness	16 mm (0.63 in)
		Radiation area	5.49 m^2 (59.09 sq ft)
Receiver drier		Effective inner capacity	190 cm^3 (11.6 cu in)
Expansion valve		Type	Internally equalizing
Evaporator		Type	Single tank
		Dimensions (W × H × T)	293.1 × 171 × 38 mm (11.54 × 6.73 × 1.50 in)
Blower fan		Fan type	Sirocco fan
		Outer diameter × width	150 × 75 mm (5.91 × 2.95 in)
		Power consumption	260 W
Condenser fan (Sub fan)		Motor type	Magnet
		Power consumption	H4 non-turbo model: 90 W H4 turbo model: 120 W H6 model: 200 W
		Fan outer diameter	H4 non-turbo model: 300 mm (11.8 in) H4 turbo model: 318.5 mm (12.5 in) H6 model: 320 mm (12.6 in)
Radiator fan (Main fan)		Motor type	Magnet
		Power consumption	H4 non-turbo model: 90 W H4 turbo model: 120 W H6 model: 200 W
		Fan outer diameter	H4 non-turbo model: 300 mm (11.8 in) H4 turbo model: 318.5 mm (12.5 in) H6 model: 320 mm (12.6 in)
Idle speed	MPFI model	No load	H4 non-turbo model (MT): 650±100 rpm H4 non-turbo model (CVT): 675±100 rpm H4 turbo model: 700±100 rpm H6 model: 700±100 rpm
		A/C ON	H4 model: 700 — 850±100 rpm H6 model: 700 — 910±100 rpm

B: COMPONENT

1. HEATER COOLING UNIT

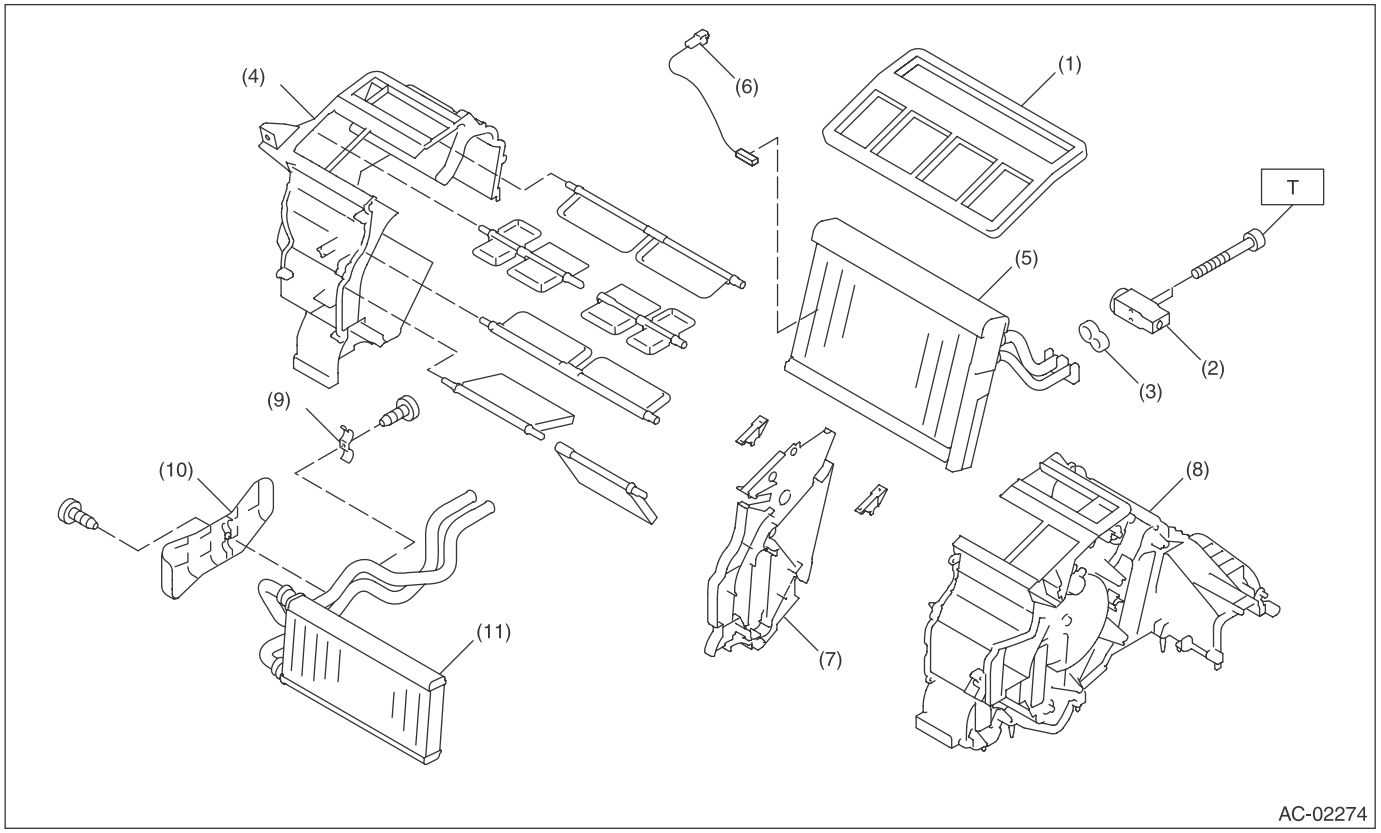

(1) Lining
(2) Expansion valve
(3) Gasket
(4) Heater case LH
(5) Evaporator
(6) Evaporator sensor
(7) Center plate
(8) Heater case RH
(9) Heater pipe clamp
(10) Heater pipe cover
(11) Heater core ASSY

Tightening torque:N·m (kgf-m, ft-lb)
T: 3.5 (0.30, 2.6)

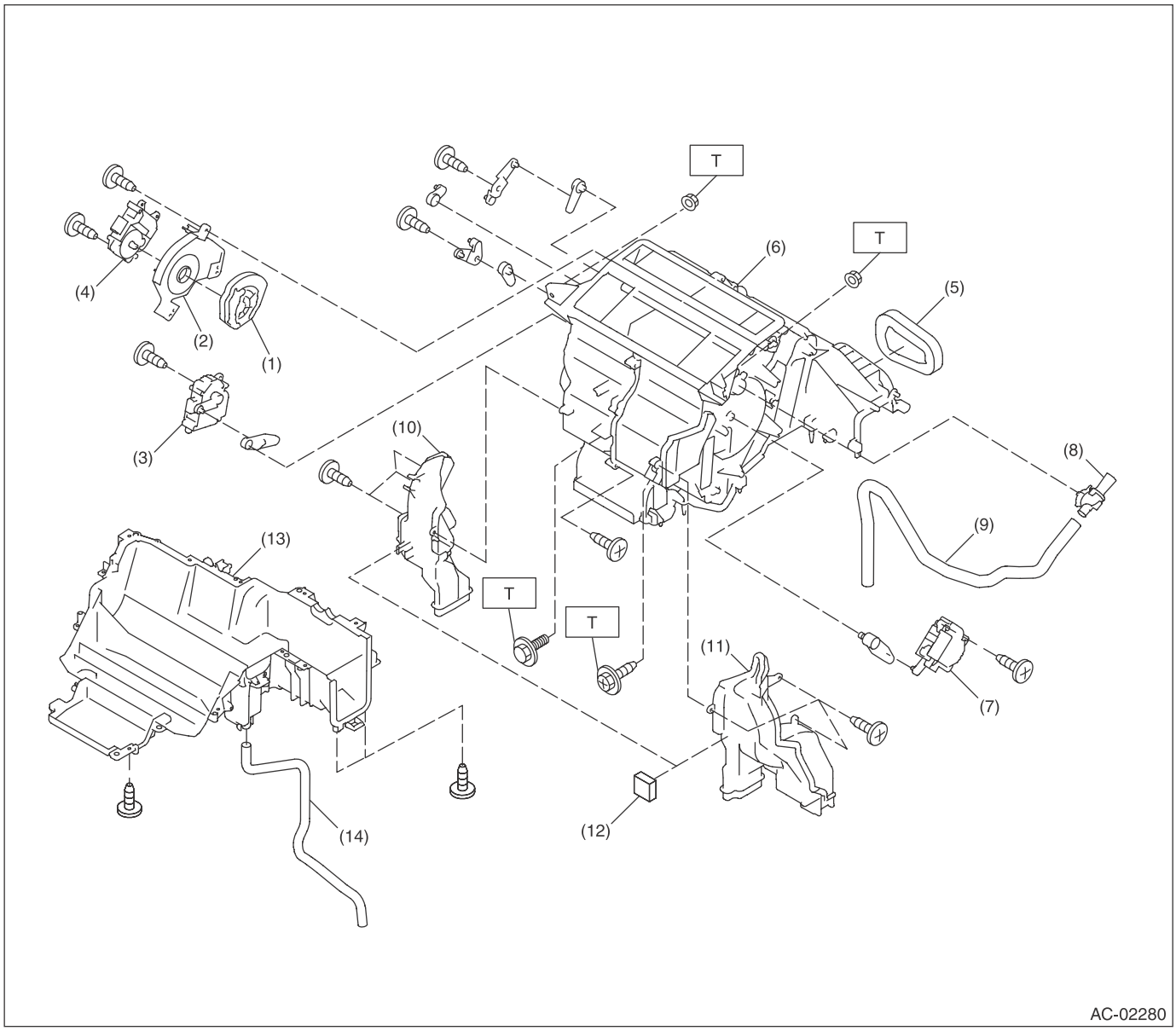

(1) Mode main lever
(2) Cover
(3) Air-mix actuator LH
(4) Mode actuator
(5) Gasket
(6) Unit ASSY
(7) Air-mix actuator RH
(8) Aspirator
(9) Aspirator hose
(10) Foot duct LH
(11) Foot duct RH
(12) Gasket
(13) Heater case lower
(14) Drain hose

Tightening torque:N·m (kgf-m, ft-lb)
T: 7.5 (0.76, 5.5)

2. BLOWER MOTOR UNIT

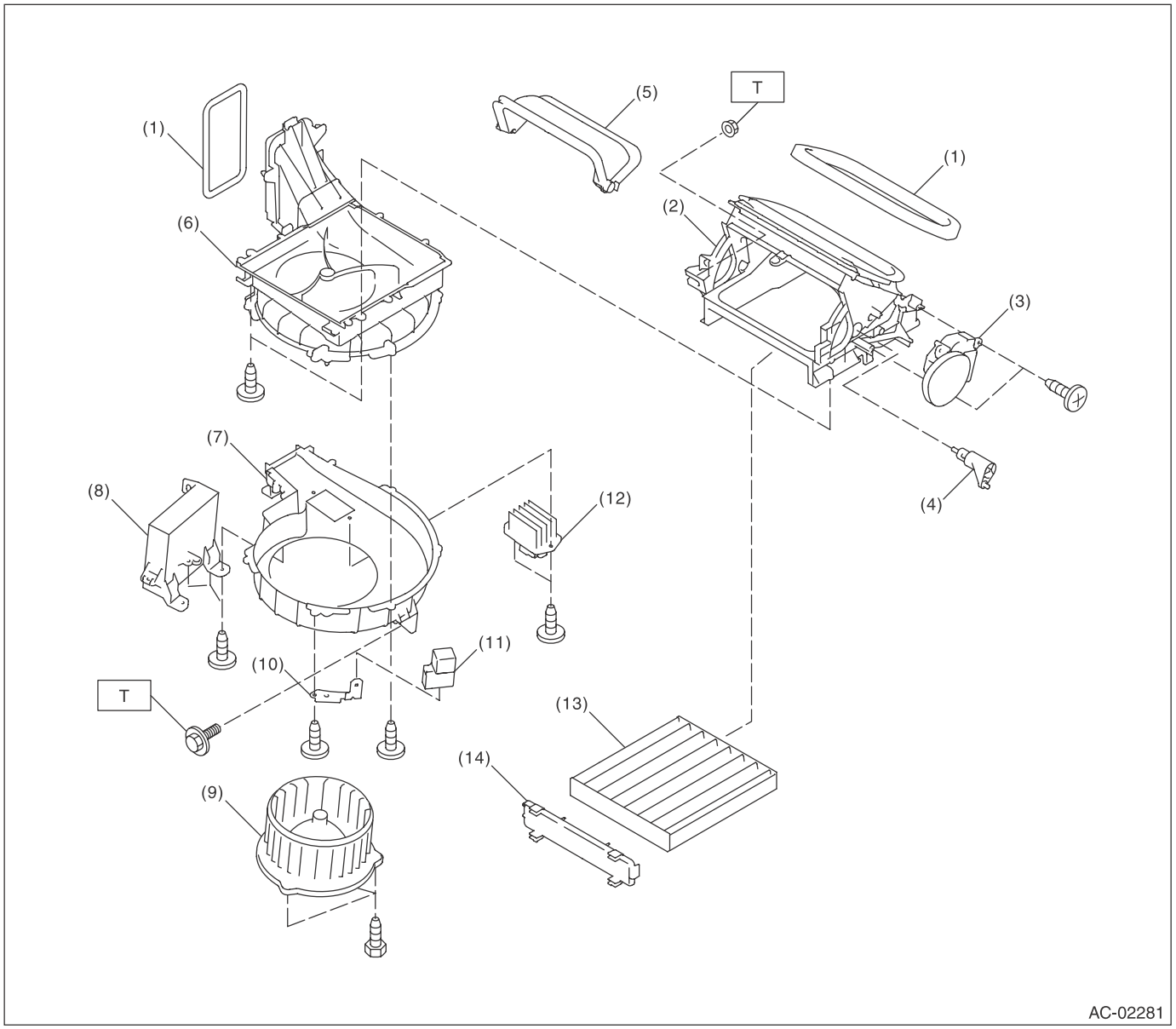

(1) Gasket
(2) Air duct cover ASSY
(3) Intake door actuator
(4) Intake door link
(5) Intake door
(6) Upper case
(7) Lower case
(8) Control module
(9) Blower motor ASSY
(10) Relay holder bracket
(11) Blower motor relay
(12) Transistor (AUTO A/C model) or resistor (manual A/C)
(13) Filter
(14) Filter cover

Tightening torque:N·m (kgf-m, ft-lb)
T: 7.5 (0.76, 5.5)

3. CONTROL MODULE

- AUTO A/C MODEL

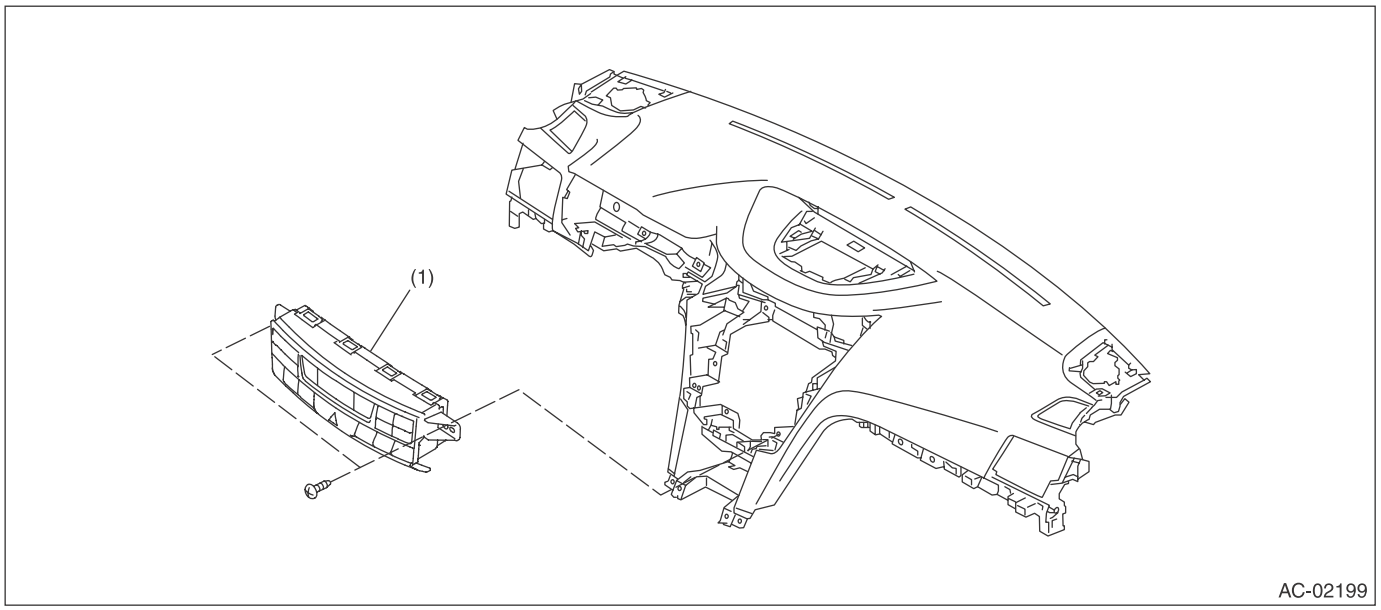

(1) Control module

- MANUAL A/C MODEL

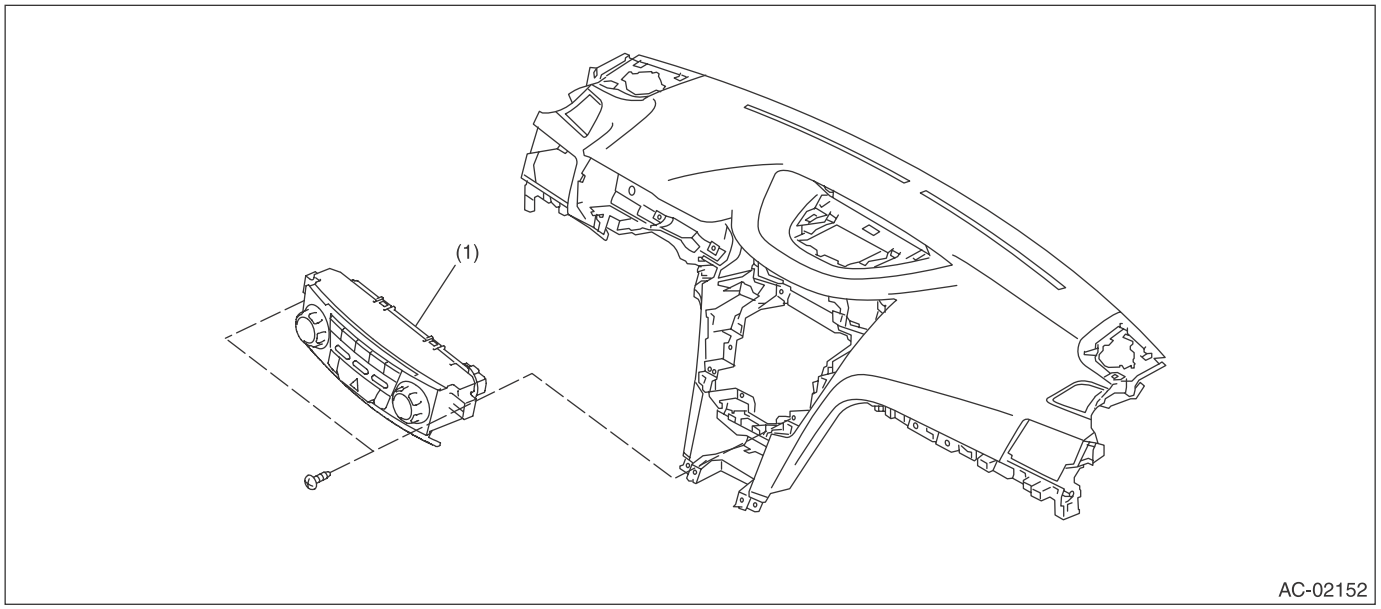

(1) Control module

4. AIR CONDITIONING UNIT

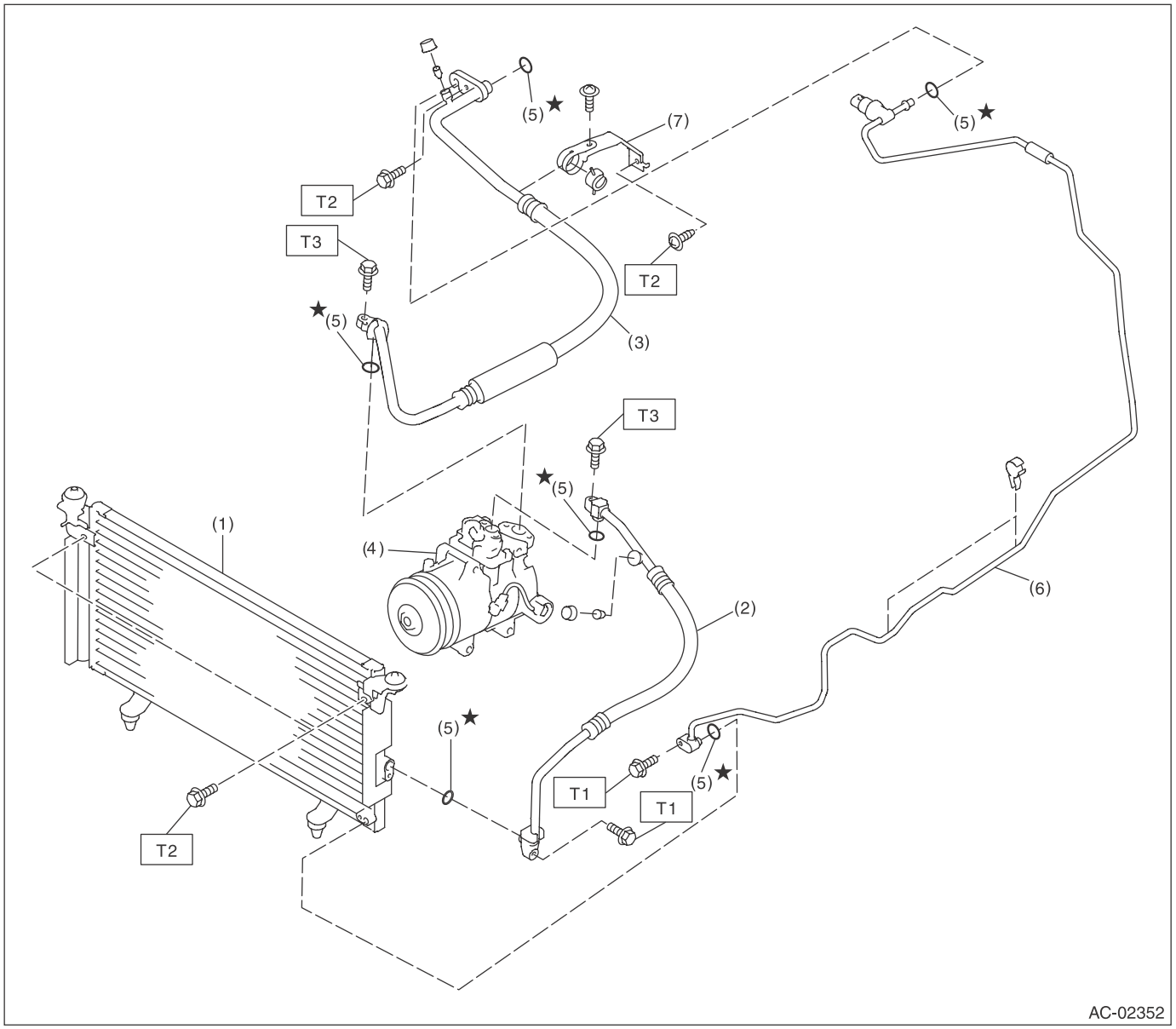

(1)	Condenser	(5)	O-ring
(2)	Hose (High-pressure)	(6)	Pipe
(3)	Hose (Low-pressure)	(7)	Bracket
(4)	Compressor		

Tightening torque:N·m (kgf-m, ft-lb)
T1: 5 (0.51, 3.7)
T2: 7.5 (0.76, 5.5)
T3: 10 (1.0, 7.4)

5. COMPRESSOR

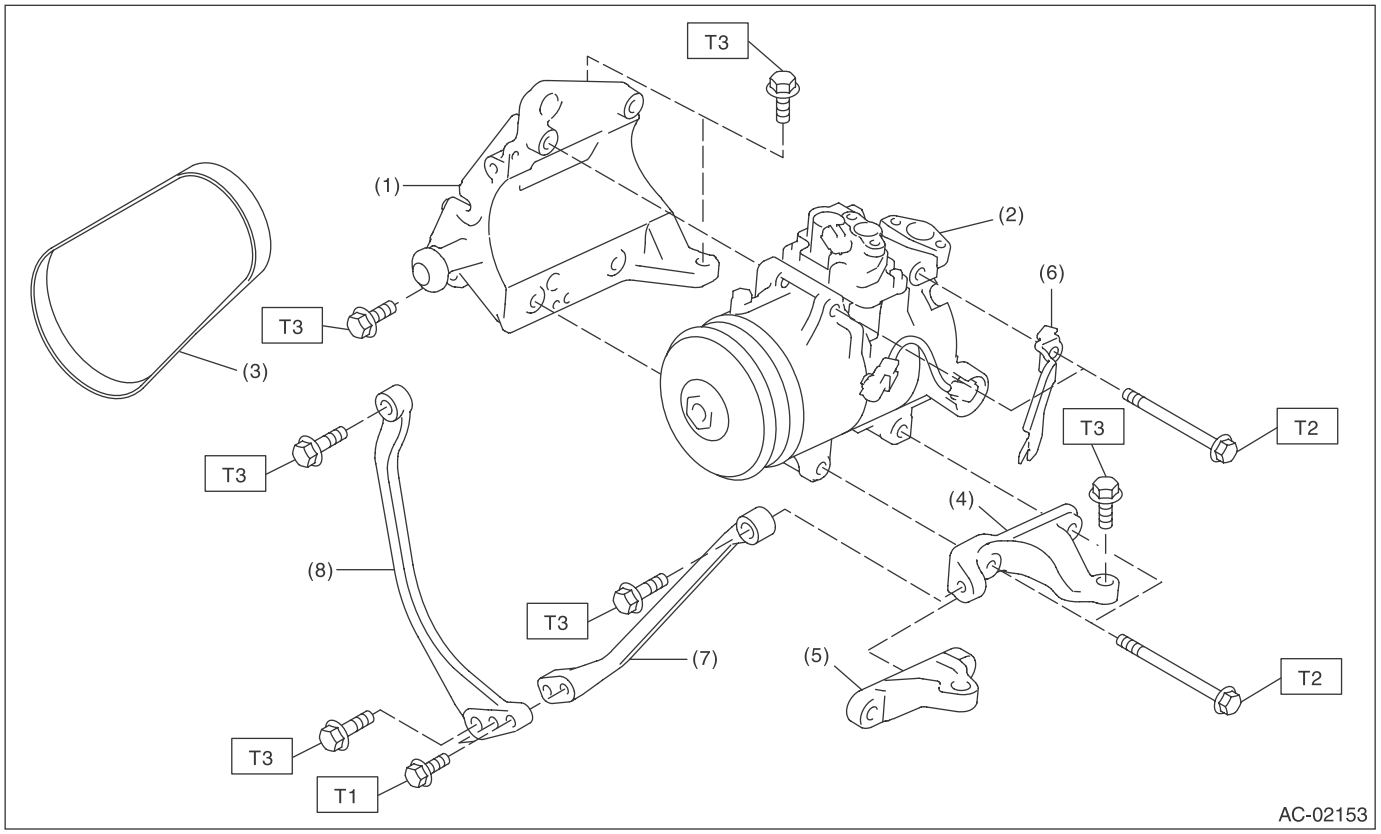

(1)	A/C compressor stay	(5)	Compressor bracket (H6 model)	***Tightening torque:N·m (kgf-m, ft-lb)***
(2)	Compressor	(6)	Connector bracket	***T1: 22 (2.2, 16.2)***
(3)	V-belt (6PK)	(7)	Stopper rod LH (H4 model)	***T2: 26.5 (2.7, 19.5)***
(4)	Compressor bracket (H4 model)	(8)	Stopper rod RH (H4 model)	***T3: 36 (3.7, 26.6)***

6. HEATER DUCT

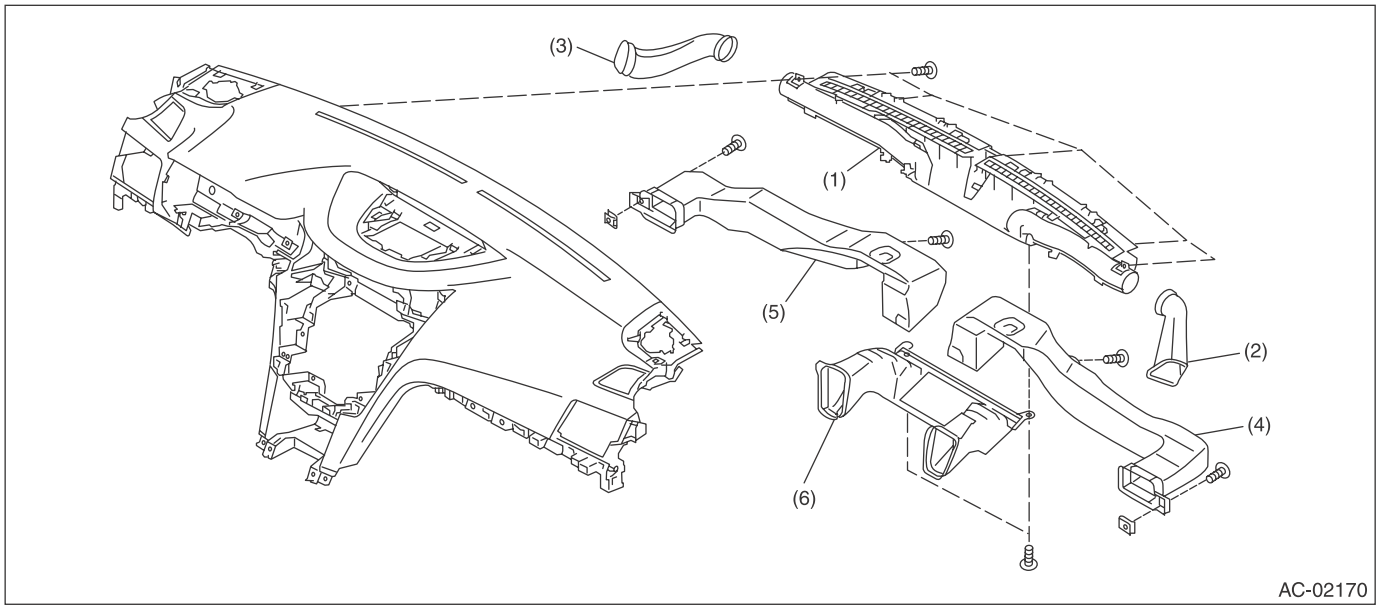

(1) Defroster nozzle ASSY
(2) Side defroster duct RH
(3) Side defroster duct LH
(4) Side vent duct RH
(5) Side vent duct LH
(6) Front vent duct

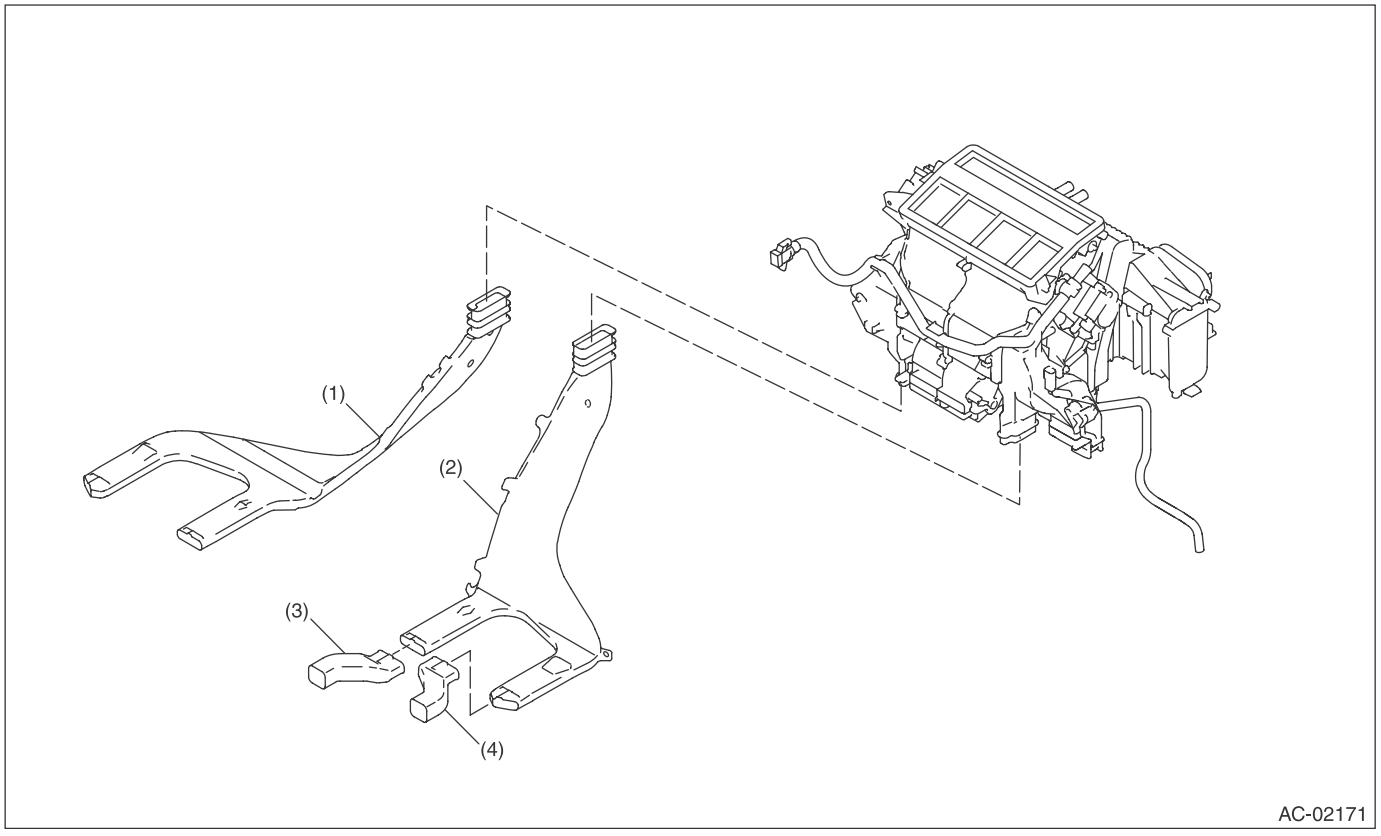

(1) Rear heater duct LH
(2) Rear heater duct RH
(3) Extension duct LH
(4) Extension duct RH

C: CAUTION

• Before disassembling or reassembling parts, always disconnect the battery ground cable from battery. When replacing the radio, control module, and other parts provided with memory functions, record the memory contents before disconnecting the battery ground cable. Otherwise, the memory is cleared.
• Reassemble the parts in the reverse order of disassembly procedure unless otherwise indicated.
• Connect the connectors securely when reassembling.
• After reassembly, make sure that the functional parts operate normally.

1. HFC-134A A/C SYSTEM

• The cooling system components for the HFC-134a system such as the refrigerant and compressor oil are different from the conventional CFC-12 system components and they are incompatible with each other.
• Vehicles with the HFC-134a system can be identified by the label (A) attached to the vehicle.
Before maintenance, check which A/C system is installed to the vehicle.

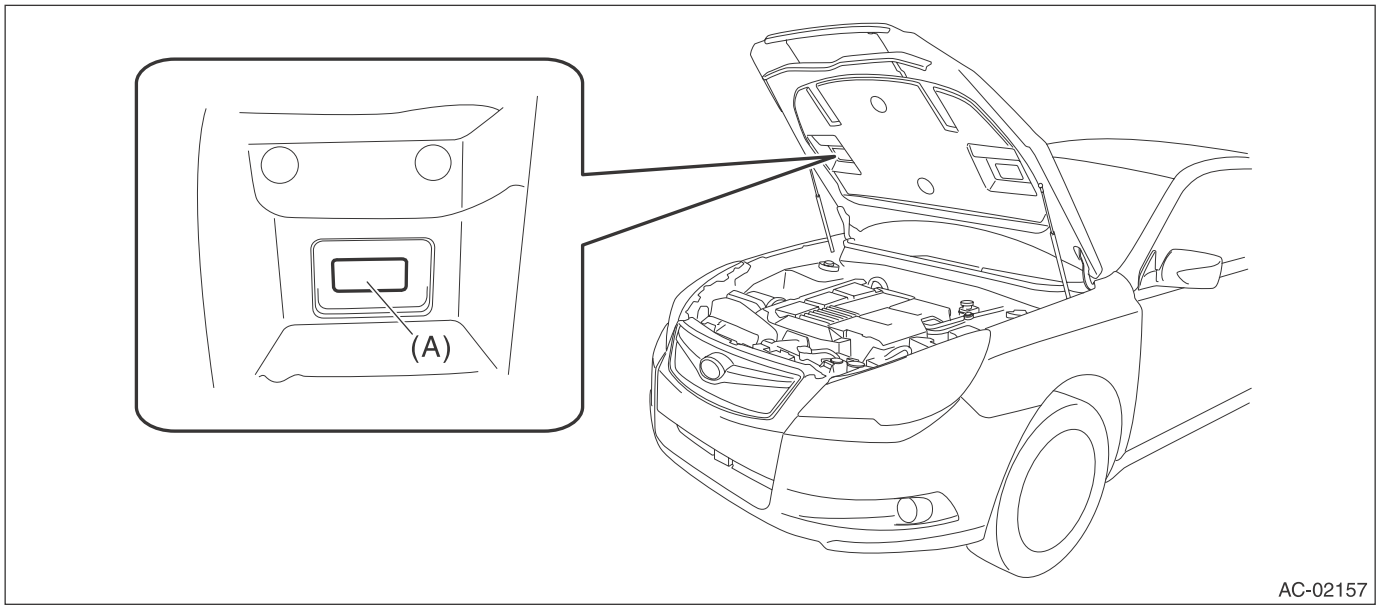

2. COMPRESSOR OIL

• HFC-134a compressor oil has no compatibility with that of CFC-12 system.
• Use only the manufacturer-authorized compressor oil, ND-OIL8, for the HFC-134a system.
• Do not mix multiple compressor oils.
If CFC-12 compressor oil is used in the HFC-134a A/C system, the compressor may become stuck due to poor lubrication, or the refrigerant may leak due to swelling of rubber parts.
On the other hand, if HFC-134a compressor oil is used in a CFC-12 A/C system, the durability of the A/C system will be lowered.
• HFC-134a compressor oil is very hygroscopic. When replacing or installing/removing A/C parts, immediately isolate the oil from atmosphere using a plug or tape. In order to avoid moisture, store the oil in a container with its cap tightly closed.

3. REFRIGERANT

• CFC-12 refrigerant cannot be used in a HFC-134a A/C system. HFC-134a refrigerant, also cannot be used in a CFC-12 A/C system.
• If an incorrect or no refrigerant is used, it will result in poor lubrication and the compressor itself may be damaged.

4. HANDLING OF REFRIGERANT

• The refrigerant boils at approx. –30°C (–22°F). When handling it, be sure to wear protective goggles and protective gloves. Direct contact of the refrigerant with skin may cause frostbite.
If the refrigerant gets into your eye, avoid rubbing your eyes with your hands. Wash your eye with plenty of water, and receive medical treatment from an eye doctor.
• Do not heat a service can. If a service can is directly heated, or put into boiling water, the inside pressure will become extremely high. This may cause the can to explode. If a service can must be warmed up, use warm water of 40°C (104°F) or less.
• Do not drop or impact a service can. (Observe the precautions and operation procedure described on the refrigerant can.)
• When the engine is running, do not open the high-pressure valve of manifold gauge. The high-pressure gas will back-flow resulting in an explosion of the can.
• Provide good ventilation and do not work in a closed area.
• In order to prevent global warming, avoid releasing HFC-134a into the atmosphere. Using a refrigerant recovery system, discharge and recycle the gas.

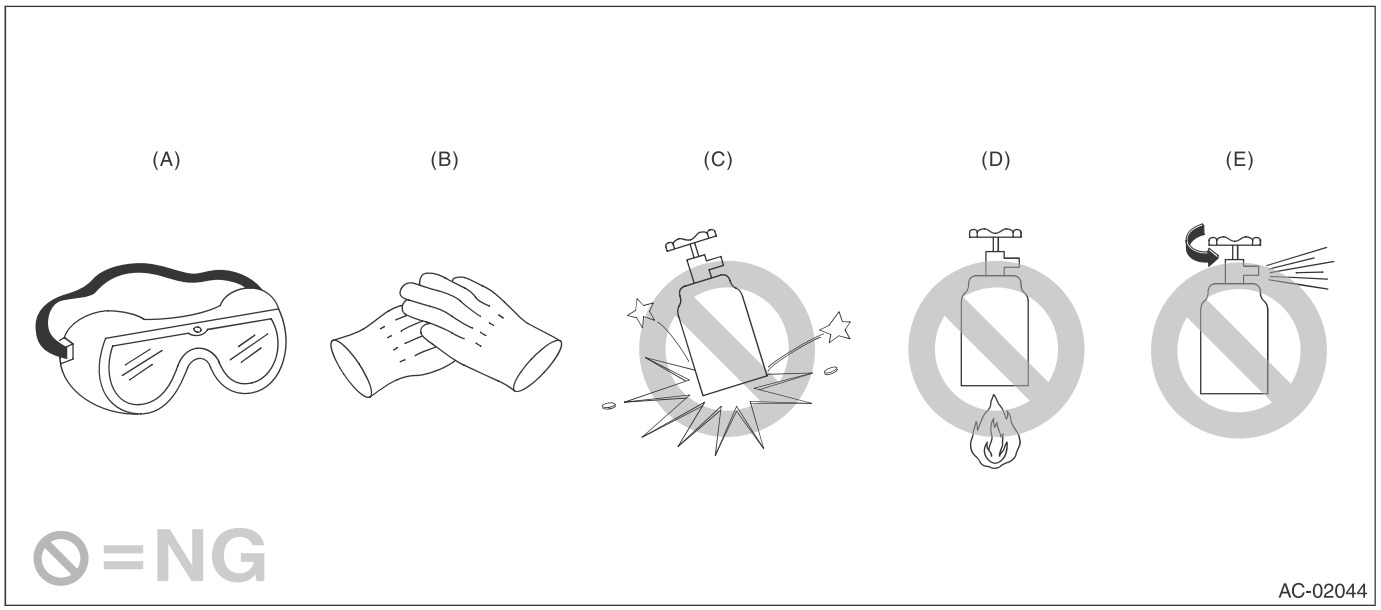

(A) Goggles
(B) Gloves
(C) Do not apply impact.
(D) No direct heat on container
(E) Do not discharge

5. O-RING CONNECTIONS

• Always use a new O-ring.
• In order to keep the O-rings free of lint which can cause a refrigerant gas leak, perform operations without gloves and cloth.
• Apply compressor oil to O-rings to avoid sticking, before installation.
• Use a torque wrench to tighten the O-ring fittings. Over-tightening will result in damage of the O-ring and deformation of the pipe end.
• If the work is interrupted before completing pipe connections, recap the pipes, components and fittings with a plug or tape to prevent foreign matter from entering.
• Visually check the surfaces and mating surfaces of O-rings, threads and connecting points. If a failure is found, replace the applicable parts.

- Install the O-rings straight against the pipe groove.

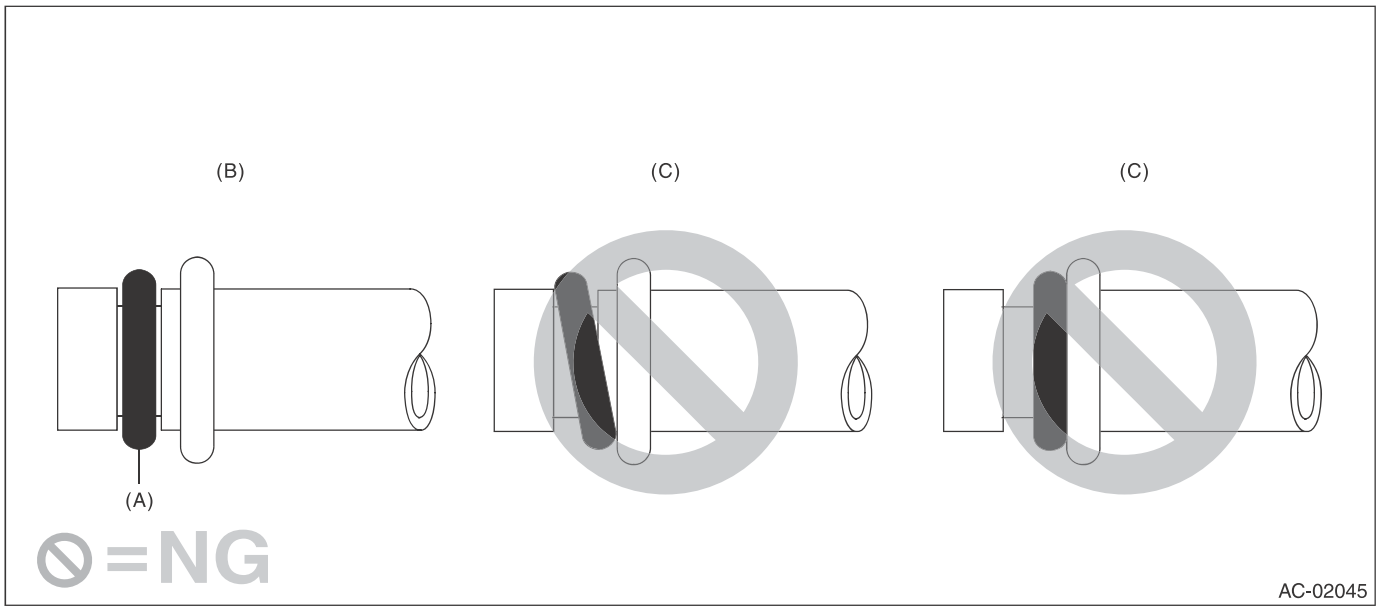

(A) O-ring (B) OK (C) NG

- Use compressor oil specified in the service manual to lubricate the O-rings.

Apply oil to the top and sides of O-rings before installation.
Apply compressor oil to the pipe grooves.

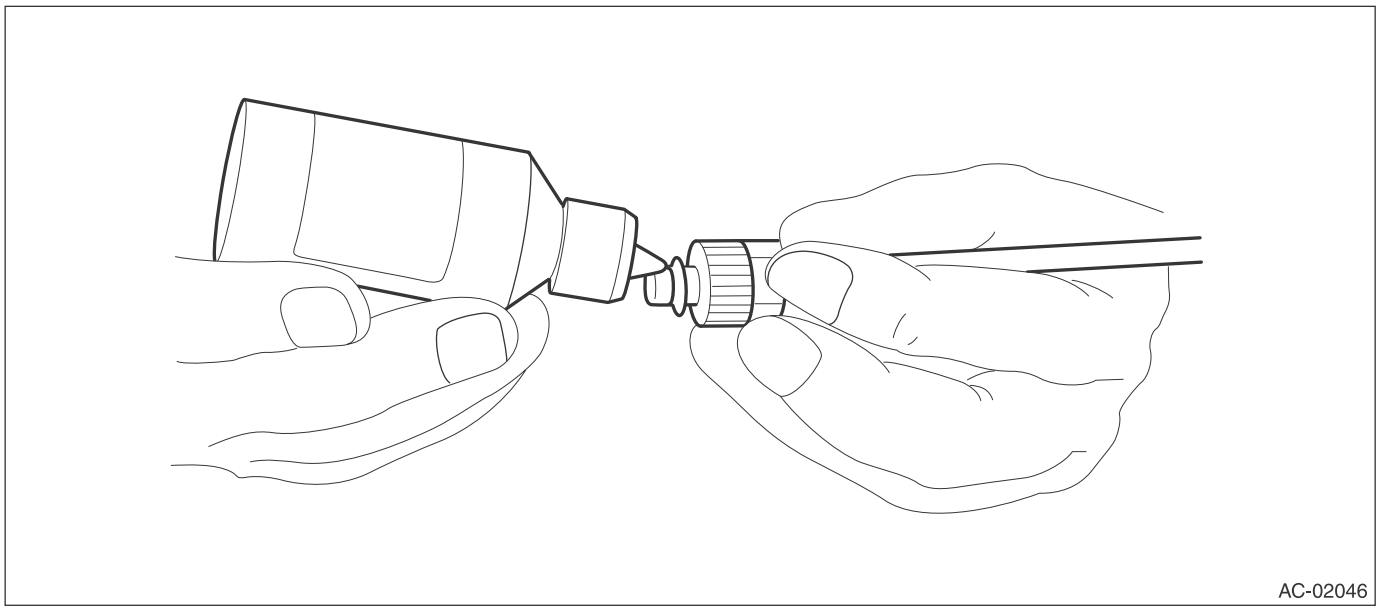

- After tightening, use a clean cloth to remove excess compressor oil from the connections and any oil which may have run on the vehicle body or other parts.
- If any leakage is suspected after tightening, do not tighten the connections further, but disconnect the connections, remove the O-rings, and check the O-rings, threads, and connections.

D: PREPARATION TOOL

CAUTION:
When working on vehicles with a HFC-134a system, only use HFC-134a specified tools and parts. Do not mix CFC-12 tools and parts. If HFC-134a and CFC-12 refrigerant or compressor oil is mixed, it will result in poor lubrication and the compressor itself may be damaged.
In order to prevent the mixture of HFC-134a and CFC-12 parts and liquid, the type of tool and screw, and the replacement valves used are different. The gas leak detectors for the HFC-134a and CFC-12 systems must also not be interchanged.

	HFC-134a	CFC-12
Tool & screw type	Millimeter size	Inch size
Valve type	Quick joint type	Screw-in type

ILLUSTRATION	Name and Function
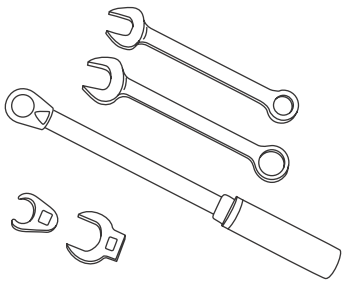 AC-00213	Wrench Various **WRENCHES** will be required to service any A/C system. 7 — 40 N·m (0.7 — 4.1 kgf-m, 5 — 30 ft-lb) torque wrench and various crowfoot wrenches will be needed. Open end or flare nut wrenches will be needed to affix the pipe and hose fittings.
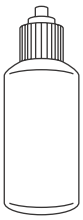 AC-00012	Applicator bottle A small **APPLICATOR BOTTLE** is recommended to apply compressor oil to the various parts. It can be available at a hardware store.
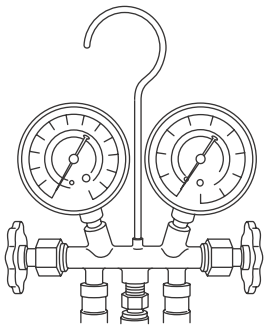 AC-00013	Manifold gauge set A **MANIFOLD GAUGE SET** (with hoses) is available at either a refrigerant supplier or an automotive equipment supplier.

ILLUSTRATION	Name and Function
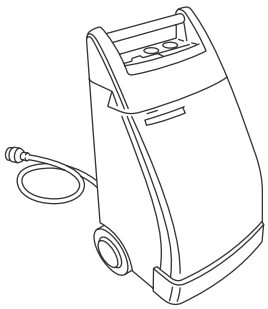 AC-00014	Refrigerant recovery system A **REFRIGERANT RECOVERY SYSTEM** is used for the recovery and recycling of A/C system refrigerant after contaminants and moisture have been removed from the refrigerant.
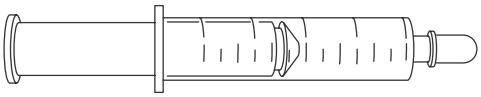 AC-00015	Syringe A graduated plastic **SYRINGE** will be needed to add oil into the system again. A syringe can be available at a pharmacy or drug store.
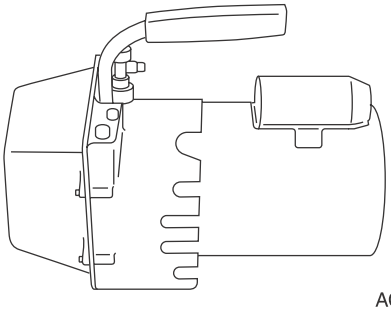 AC-00016	Vacuum pump A **VACUUM PUMP** is necessary (for a good working condition), and is available either at a refrigerant supplier or an automotive equipment supplier.
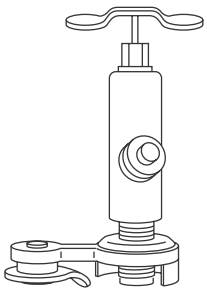 AC-00017	Can tap A **CAN TAP** for the 397 g (14 oz.) can is available at an automotive equipment supplier.
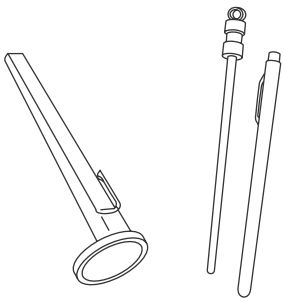 AC-00018	Thermometer A Pocket **THERMOMETER** is available at either a industrial hardware store or a refrigerant supplier.

ILLUSTRATION	Name and Function
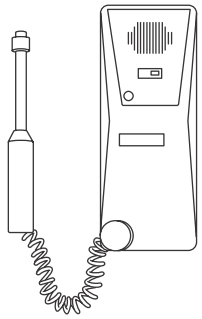 AC-00019	Electronic leak detector An **ELECTRONIC LEAK DETECTOR** can be available at either a specialty tool supplier or an A/C equipment supplier.
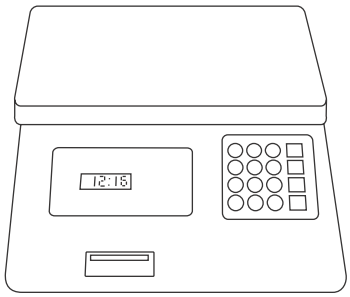 AC-00020	Weight scale A **WEIGHT SCALE** such as an electronic charging scale or a bathroom scale with digital display will be needed, if a 13.6 kg (30 lb) refrigerant container is used.

2. Refrigerant Pressure with Manifold Gauge Set

A: PROCEDURE

1) Place the vehicle in the shade and windless condition.
2) Open the front hood.
3) Connect the manifold gauge set.
4) Open the front windows and close all doors.
5) Increase the engine to 1,500 rpm.
6) Turn the A/C switch to ON.
7) Turn the temperature control switch to MAX COOL.
8) Put in RECIRC position.
9) Turn the blower control switch to HI.
10) Read the gauge.

Standard:
Low pressure: 127 — 196 kPa (1.3 — 2.0 kgf/cm^2, 18 — 28 psi)
High pressure: 1,471 — 1,667 kPa (15 — 17 kgf/cm^2, 213 — 242 psi)
Ambient temperature: 30 — 35°C (86 — 95°F)

B: INSPECTION

Symptoms	Probable cause	Inspection order
High-pressure side is unusually high.	• Defective condenser fan motor • Clogged condenser fin • Too much refrigerant • Air inside the system • Defective receiver dryer	• Replace the fan motor. • Clean the condenser fin. • Discharge refrigerant. • Replace the receiver dryer. • After evacuating again, charge an appropriate amount of refrigerant.
High-pressure side is unusually low.	• Defective compressor • Not enough refrigerant • Clogged expansion valve • Expansion valve frozen temporarily by moisture.	• Replace the compressor. • Check for leaks. • Replace the expansion valve. • Fully evacuate the expansion valve.
Low-pressure side is unusually high.	• Defective compressor • Defective expansion valve • Too much refrigerant	• Replace the compressor. • Replace the expansion valve. • Discharge refrigerant.
Low-pressure side is unusually low.	• Not enough refrigerant • Clogged expansion valve • Expansion valve frozen temporarily by moisture. • Saturated receiver dryer	• Check for leaks. • Replace the expansion valve. • Replace the receiver dryer.

3. Refrigerant Recovery Procedure

A: PROCEDURE

CAUTION:
• During operation, be sure to wear protective goggles and protective gloves.
• Connect the refrigerant recovery system with the manifold gauge set to discharge the refrigerant from the A/C system and recycle the gas.
• When recycling the discharged refrigerant, keep service cans on hand. Because the recovery rate with the recovery system is approx. 90%, service cans are necessary to charge the refrigerant.
• Follow the detailed operation procedure described in the operation manual attached to the refrigerant recovery system.
1) Perform compressor oil return operation. <Ref. to AC-24, PROCEDURE, Compressor Oil.>
2) Stop the engine.
3) Make sure the valves on low/high pressure sides of manifold gauge set are fully closed.

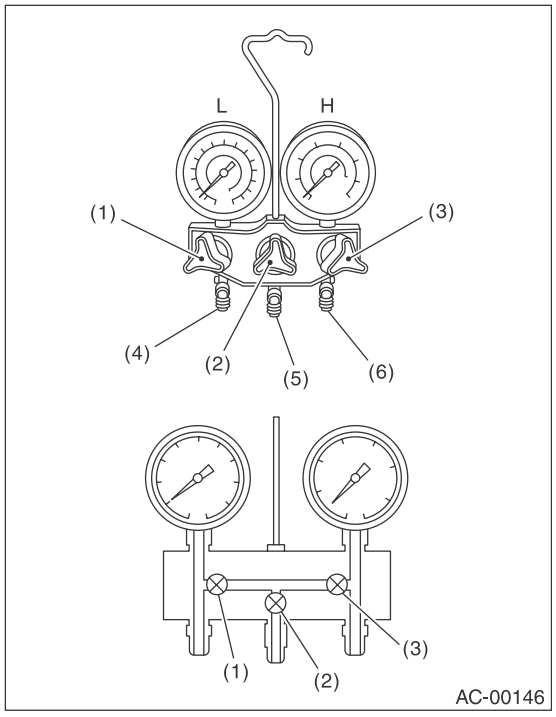

L: Low pressure gauge
H: High pressure gauge
(1) Low pressure valve
(2) Vacuum pump valve
(3) High pressure valve
(4) For low pressure
(5) For vacuum pump
(6) For high pressure

4) Install the low/high pressure hoses to the service ports on the low/high pressure sides of the vehicle respectively.

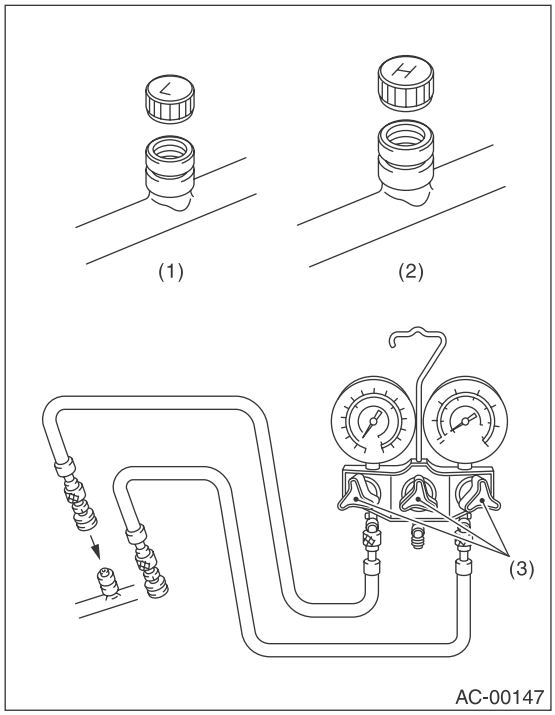

(1) Low-pressure side service port
(2) High-pressure side service port
(3) Close

5) Connect the center hose to the refrigerant recovery system.
6) Follow the operation manual to activate the refrigerant recovery system.

4. Refrigerant Charging Procedure

A: PROCEDURE

CAUTION:
• While working, be sure to wear protective goggles and protective gloves.
• Air in the cycle can cause insufficient air conditioning, and water in the cycle can cause clogging in the cycle (icing) and rust. To remove this air and water content, use a vacuum pump to perform evacuation before filling with refrigerant. By making the inside of the cycle a vacuum, the water content will evaporate even at normal temperatures, and can be removed.
• Never run the engine while charging refrigerant.

1) Close all valves of the manifold gauge.

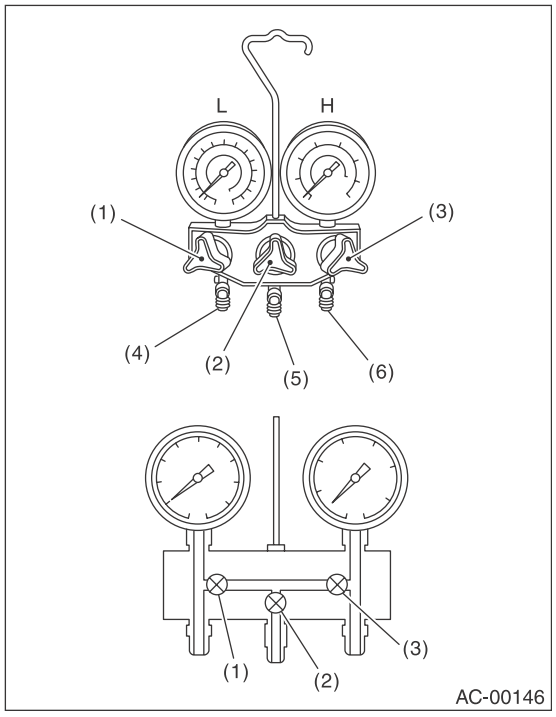

L: Low pressure gauge
H: High pressure gauge
(1) Low pressure valve
(2) Vacuum pump valve
(3) High pressure valve
(4) For low pressure
(5) For vacuum pump
(6) For high pressure

2) Attach the low pressure side and high pressure side hoses to the vehicle service port.

CAUTION:
Confirm that the connections are secure.

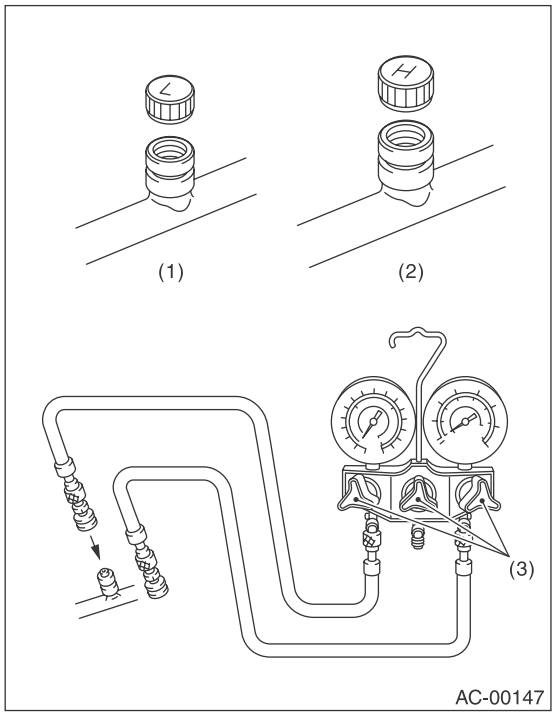

(1) Low-pressure side service port
(2) High-pressure side service port
(3) Close

3) Connect the center manifold hose of the manifold gauge to the vacuum pump.
4) Operate the vacuum pump and open the low pressure and high pressure side valves. Next, open the center manifold hose valve, and begin evacuation.

CAUTION:
Make sure to perform evacuation using a vacuum pump.

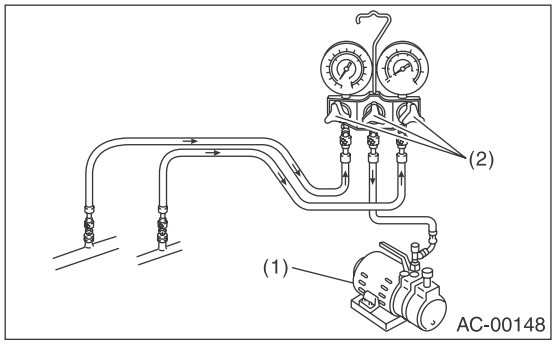

(1) Vacuum pump
(2) Open

5) Perform evacuation for 5 minutes or more, and when the low pressure gauge needle reaches –100.0 kPa (–750 mmHg, –29.5 inHg), close the center manifold hose valve, and stop the vacuum pump.
6) Leave alone for 5 to 10 minutes after closing the low pressure side and high pressure side valves, and check whether there is any change in the low pressure gauge needle indication. If the needle position changes, this indicates a leak. Check the pipe and hose connections, and repair the location with the problem. In this case, repeat again from step 1).
7) If there is no leakage, continue evacuation for additional 20 to 30 minutes.
8) Close all valves and stop the vacuum pump.
9) Follow the can tap operation manual, install to the refrigerant can.

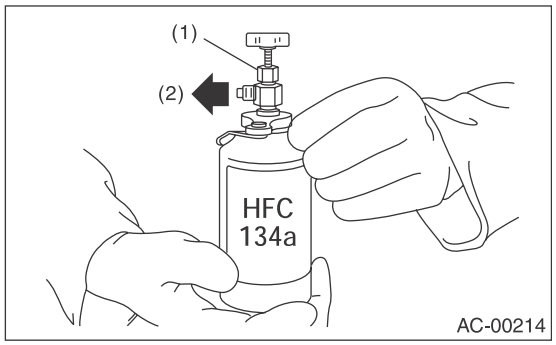

(1) Tap valve
(2) To the center manifold hose

10) Disconnect the center manifold hose from the vacuum pump, and connect the hose to the tap valve.
11) When a 13.6 kg (30 lb) refrigerant container is used, measure the amount of refrigerant with a refrigerant charging scale, and connect with the center manifold hose.

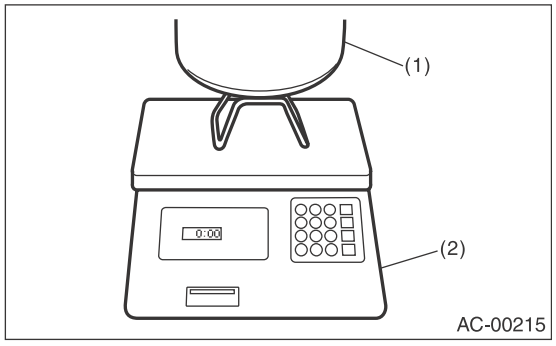

(1) Refrigerant container (HFC-134a)
(2) Weight scale

12) Open the valve on the HFC-134a source.
13) Loosen the center manifold hose connection on the manifold gauge for a few seconds (if there is a purge valve on the manifold gauge, push this instead) to allow the air in the center manifold hose to be bled by the refrigerant pressure.

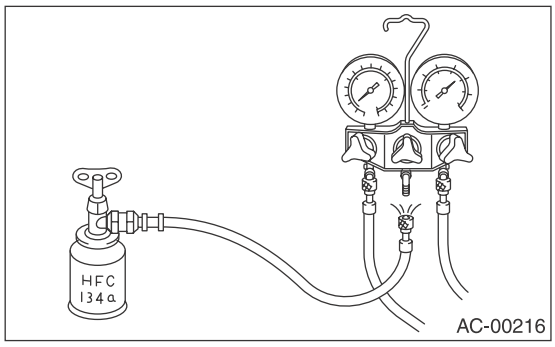

14) Open the high pressure side and low pressure side valves of the manifold gauge to fill with refrigerant.

CAUTION:
When filling with the engine running, do not open the high pressure side valve. Always fill from the low pressure side.

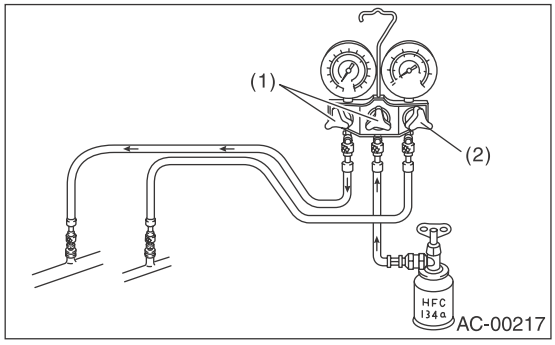

(1) Open
(2) Open

15) When the gauge needle reaches approximately 200 kPa (1,500 mmHg, 59.1 inHg), close all valves.
16) Using a leak tester, check for refrigerant leaks in the system.
17) After checking that there are no refrigerant leaks, fill with refrigerant up to the specified amount.
18) If the HFC-134a supply container becomes empty, close all valves, and close the can tap valve to replace the empty container. After replacing with a new HFC-134a supply container, perform air purge, and resume the filling operation.
19) If the refrigerant filling efficiency drops, close all valves.
20) Check that both the low pressure and high pressure valves are closed. Start the engine with the A/C switch OFF.

21) To prevent damage to the compressor, push the A/C switch ON-OFF quickly a few times.
22) Set up the vehicle to the following status:

CAUTION:
When filling with the engine running, do not open the high pressure side valve.
Always fill from the low pressure side valve.

- A/C switch ON
- Engine running at 1,500 rpm
- Blower speed setting to “HI”
- Temperature setting to “MAX COOL”
- Air inlet setting to “RECIRC”
- Window open

23) Open the low pressure side valve and fill with refrigerant up to the specified amount.
24) After filling with refrigerant, close all valves and disconnect the hose from the service port.
25) Attach the cap to the service port.

5. Refrigerant Leak Check

A: INSPECTION

1) Operate the A/C system for approx. 10 minutes, and check that the high-side pressure shows at least 690 kPa (7.03 kgf/cm^2, 100 psi). Then stop the engine to start the leak test.
2) Starting from the connection between high-pressure pipe and evaporator, check the system for leaks along the high-pressure side through the compressor. The following items must be checked thoroughly.
• Check the joint and seam between pressure sensor and high-pressure pipe.
• Check the connections between condenser and pipes, and welded joints on the condenser.

NOTE:
The leak tester may detect the oil on the condenser fins as a leak.
• Check the joint between compressor and hoses.
• Check the machined area of the compressor and other joints on the compressor.
• Check the compressor shaft seal at the area near the center of compressor clutch pulley.

NOTE:
Shaft seals may show a slight amount of leakage, about 3 g (0.1 oz) per year. This is not a problem.
3) Starting from the connection between low-pressure pipe and evaporator, check the system for leakage along the low-pressure side through the compressor. The following items must be checked thoroughly.
• Connection between 2 parts
• Connection between pipe and plate

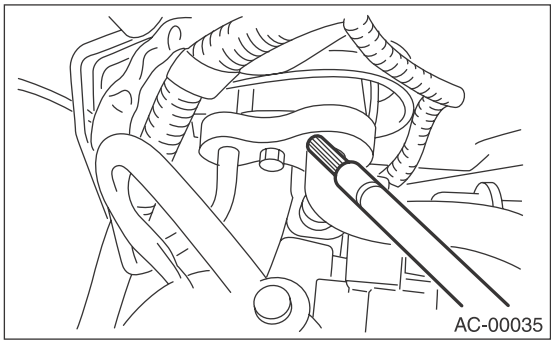
AC-00035

4) Visually check the rubber area of the flexible hose for cracks. Check the entire length of the flexible hose, especially the connection with the metal hose end.

CAUTION:
Carefully check the external surface of hoses and pipes at approx. 25 mm (0.98 in) per second.

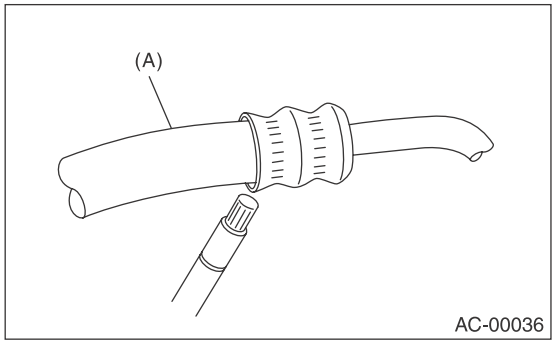

AC-00036

(A) Flexible hose

5) Disconnect the drain hose from the heater case, and check the hose end for at least 10 seconds.
After the test is finished, reconnect the drain hose.
6) Turn the ignition key to ON, and run the blower at high speed for approx. 1 minute. Stop the blower and check the ventilation grille on the instrument panel. While moving the tester closer to the grille, run the blower for 1 or 2 seconds, then stop it. Check the grille at that position for at least 10 seconds.

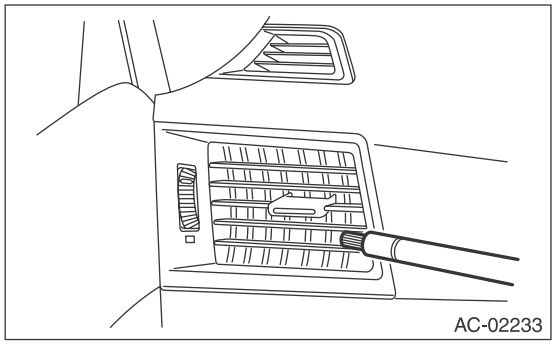
AC-02233

7) Check the valve in the service port.
8) Visually check the rubber seal in the service port cap.

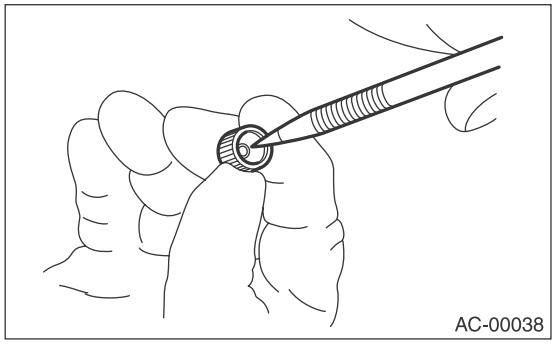
AC-00038

6. Relay and Fuse

A: LOCATION

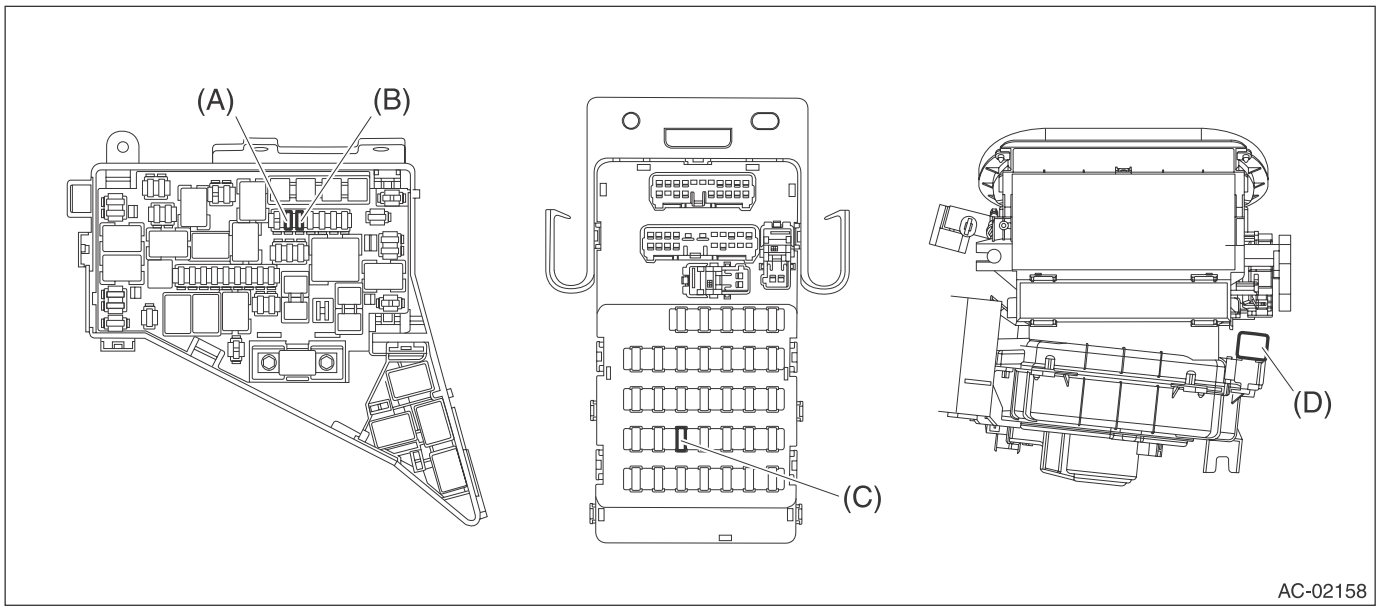

Main Fuse Box	Fuse 15 A	(A)
	Fuse 15 A	(B)
Relay & fuse box	Fuse 15 A	(C)
BLOWER MOTOR UNIT	Blower motor relay	(D)

B: INSPECTION

1. CHECK FUSE.

1) Remove the fuse and check visually.
2) If the fuse is blown out, replace the fuse.

2. CHECK RELAY

1) Check the resistance between relay terminals.

Terminal No.	Inspection conditions	Standard	Circuit
1 — 4	Always	1 MΩ or more	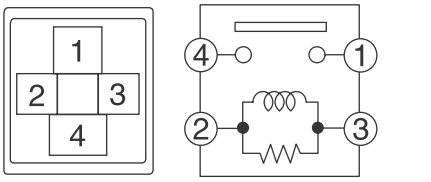
1 — 4	Apply battery voltage between terminals 2 — 3.	Less than 1 Ω	

2) Replace the relay if it is found defective.

7. Compressor Oil

A: PROCEDURE

NOTE:
Before making repairs, perform the oil return operation to return the compressor oil in circulation with the refrigerant to the compressor.
1) Increase the engine to 1,500 rpm.
2) Turn the A/C switch to ON.
3) Turn the temperature control switch to MAX COOL.
4) Put in RECIRC position.
5) Turn the blower control switch to HI.
6) Leave in this condition for 10 minutes.

B: REPLACEMENT

NOTE:
• If a component has been replaced, add an appropriate amount of compressor oil (same as the amount of remaining oil in removed component).
• When replacing the compressor, the new compressor will already have the specified amount of oil in it. Install the new compressor so that the amount of oil becomes the same as the amount of remaining oil in the removed compressor.
• Since the hygroscopicity of compressor oil is high, perform this series of works quickly.

8. Blower Motor Unit Assembly

A: REMOVAL

1) Disconnect the ground cable from battery.
2) Using the refrigerant recovery system, drain the refrigerant. <Ref. to AC-18, PROCEDURE, Refrigerant Recovery Procedure.>
3) Drain the coolant from the radiator.
- H4 non-turbo model: <Ref. to CO(H4SO)-14, DRAINING OF ENGINE COOLANT, REPLACEMENT, Engine Coolant.>
- H4 turbo model: <Ref. to CO(H4DOTC)-14, DRAINING OF ENGINE COOLANT, REPLACEMENT, Engine Coolant.>
- H6 model: <Ref. to CO(H6DO)-12, DRAINING OF ENGINE COOLANT, REPLACEMENT, Engine Coolant.>

4) Remove the connector and bolts, and remove the expansion valve and AC pipes from the evaporator.
5) Loosen the heater hose clamps and remove the hoses.

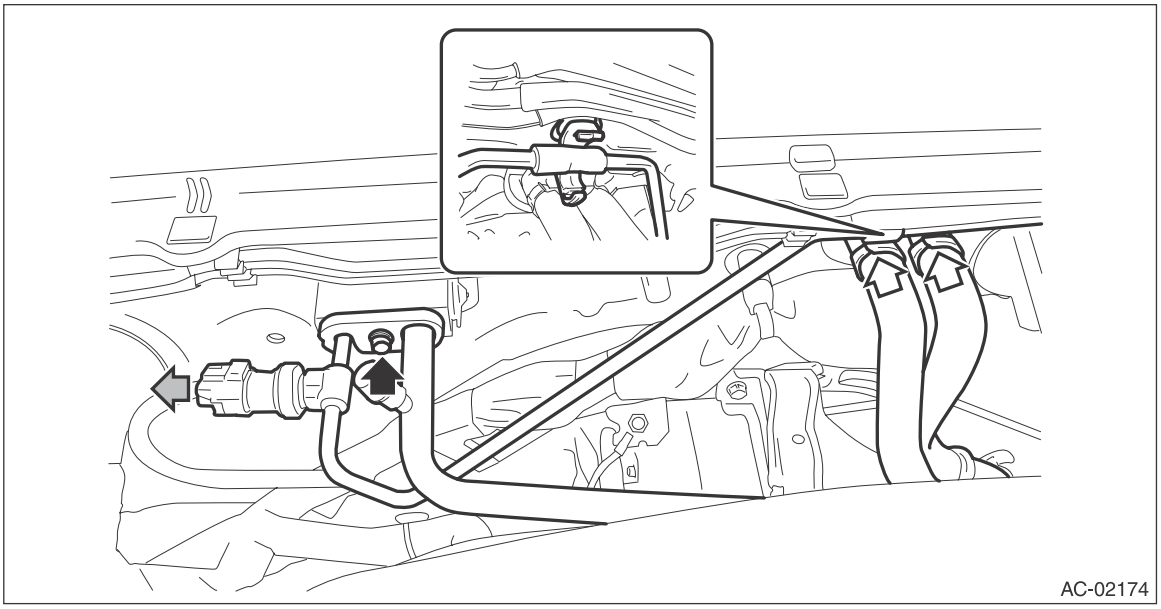

6) Remove the instrument panel assembly. <Ref. to EI-75, REMOVAL, Instrument Panel Assembly.>
7) Remove the heater and cooling unit.
   (1) Release the lock and remove the relay holder.

(2) Remove the nuts, and remove the engine control module (ECM).

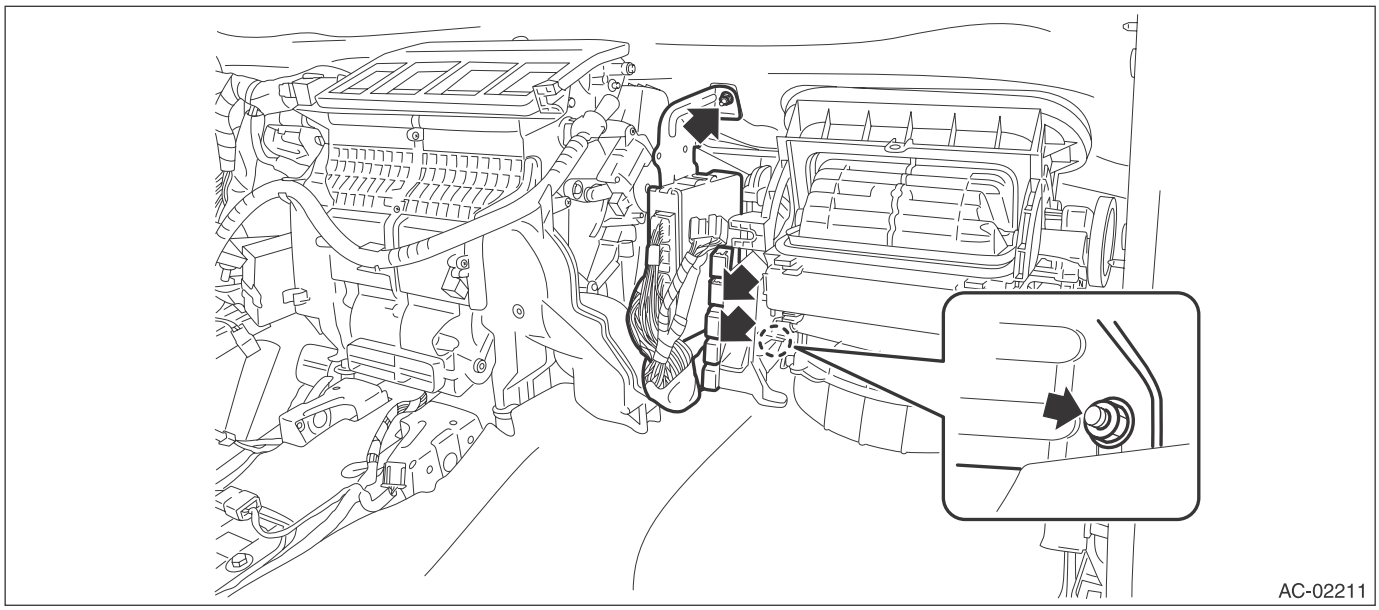

(3) Remove the bolts and remove the heater and cooling unit.

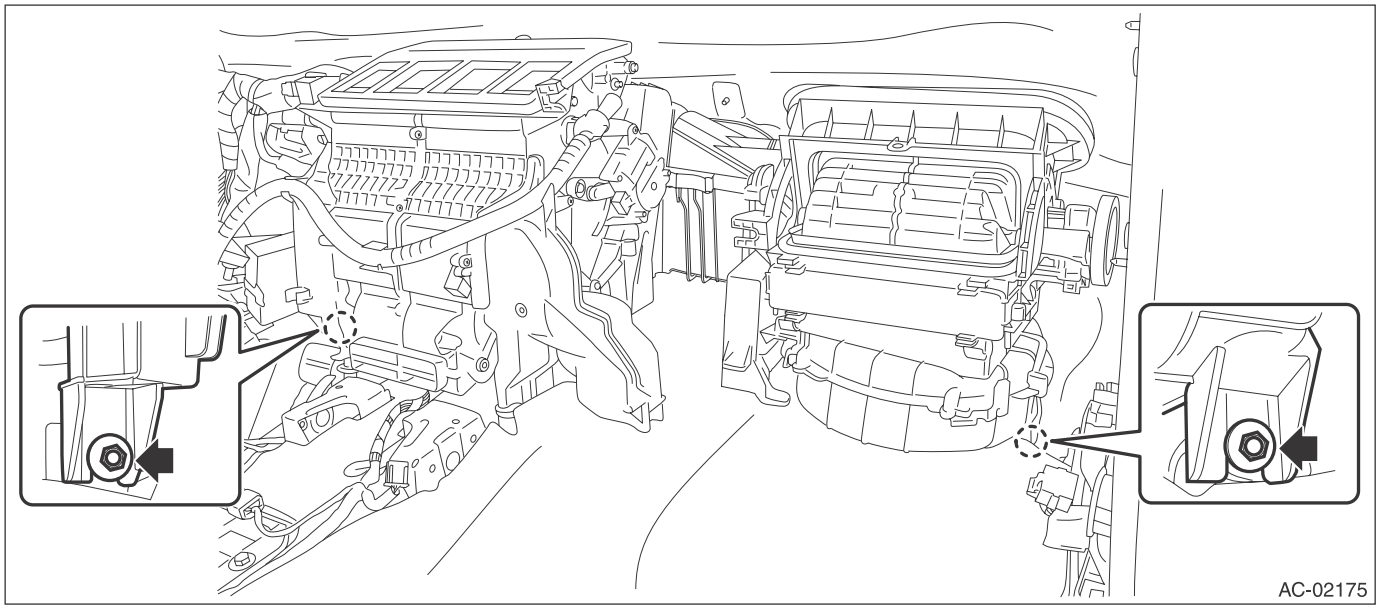

8) Remove the blower motor unit assembly.

(1) Release the claws and remove the bolts.

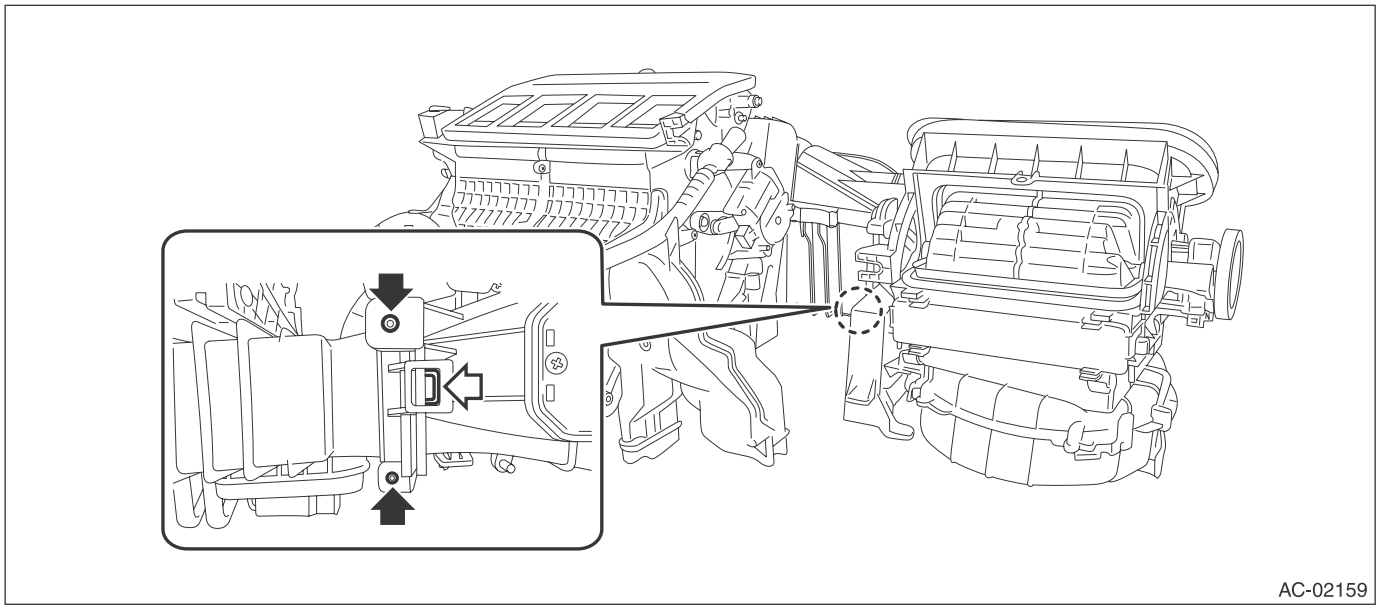

(2) Remove the blower motor unit assembly as shown in the figure.

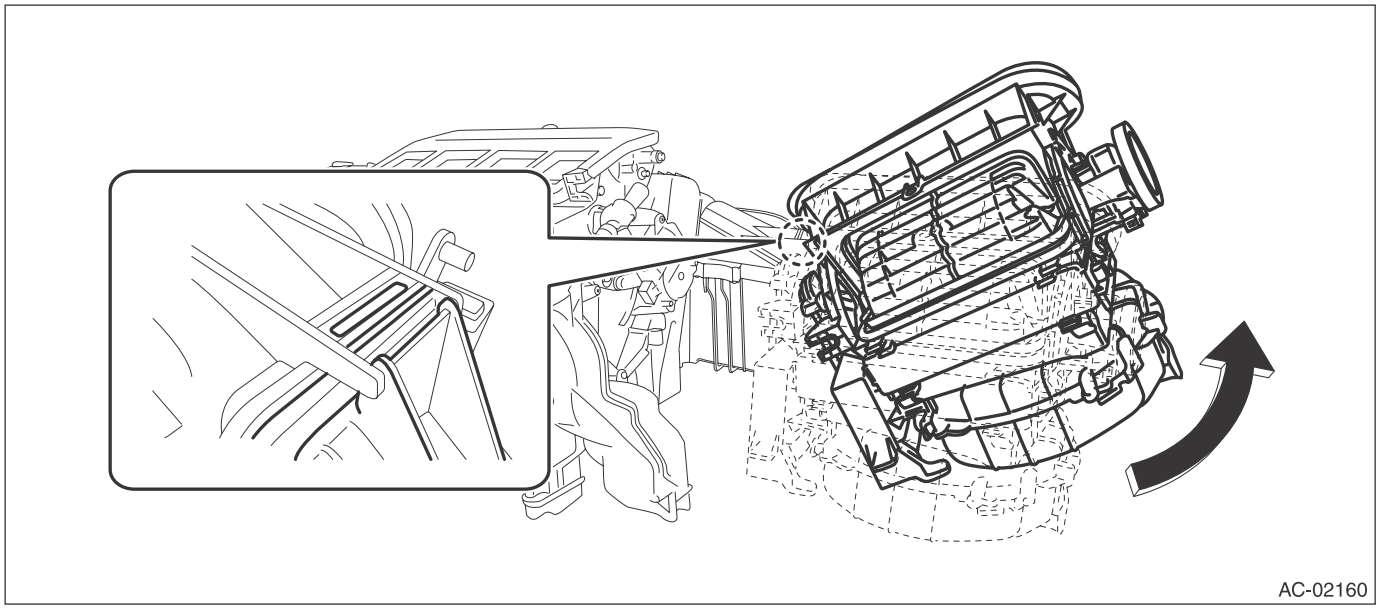

B: INSTALLATION

CAUTION:
• After installing the compressor, do not start the engine until the A/C system is charged with refrigerant.
• If the engine is started with no refrigerant charge, replace the compressor.
• If the engine may have been started with no refrigerant charge, check for any diagnosis code (DTC) using Subaru Select Monitor. If the code B1644 (Refrigerant not sealed drive error) is output, replace the compressor.
1) Install each part in the reverse order of removal.
2) Fill engine coolant.
• H4 non-turbo model: <Ref. to CO(H4SO)-14, FILLING OF ENGINE COOLANT, REPLACEMENT, Engine Coolant.>
• H4 turbo model: <Ref. to CO(H4DOTC)-14, FILLING OF ENGINE COOLANT, REPLACEMENT, Engine Coolant.>
• H6 model: <Ref. to CO(H6DO)-12, FILLING OF ENGINE COOLANT, REPLACEMENT, Engine Coolant.>
3) Charge refrigerant. <Ref. to AC-19, PROCEDURE, Refrigerant Charging Procedure.>

Tightening torque:

- ***Heater cooling unit: <Ref. to AC-4, HEATER COOLING UNIT, COMPONENT, General Description.>***
- ***Blower motor unit: <Ref. to AC-6, BLOWER MOTOR UNIT, COMPONENT, General Description.>***

9. Blower Motor

A: REMOVAL

1) Disconnect the ground cable from battery.
2) Remove the clips, and remove the glove box under cover.

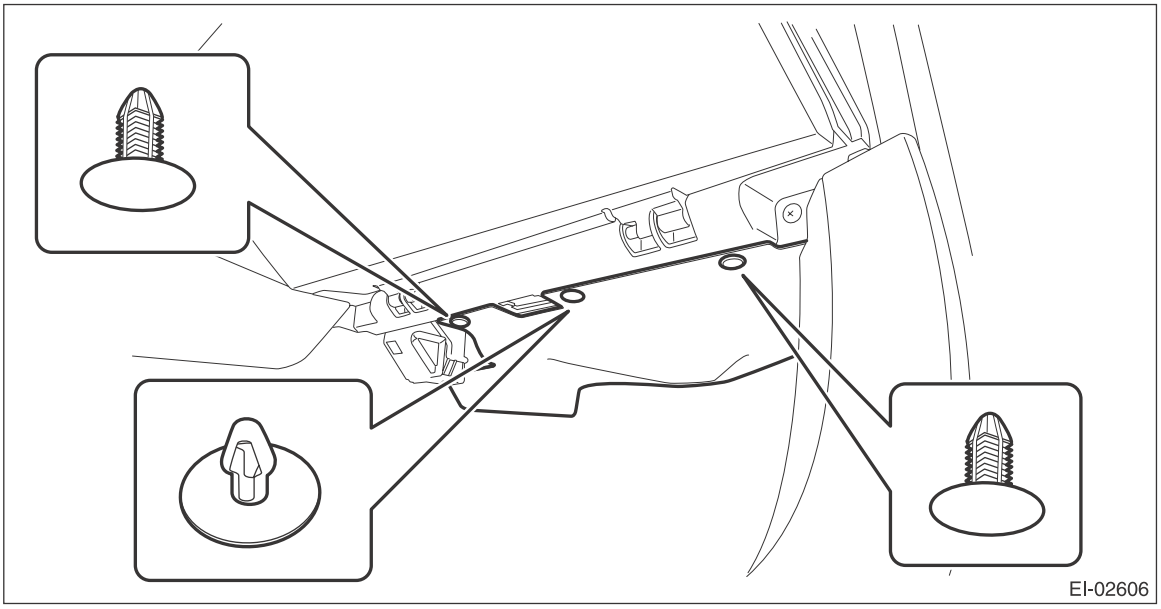

3) Remove the blower motor.
   (1) Disconnect the connector.
   (2) Remove the screw and remove the blower motor.

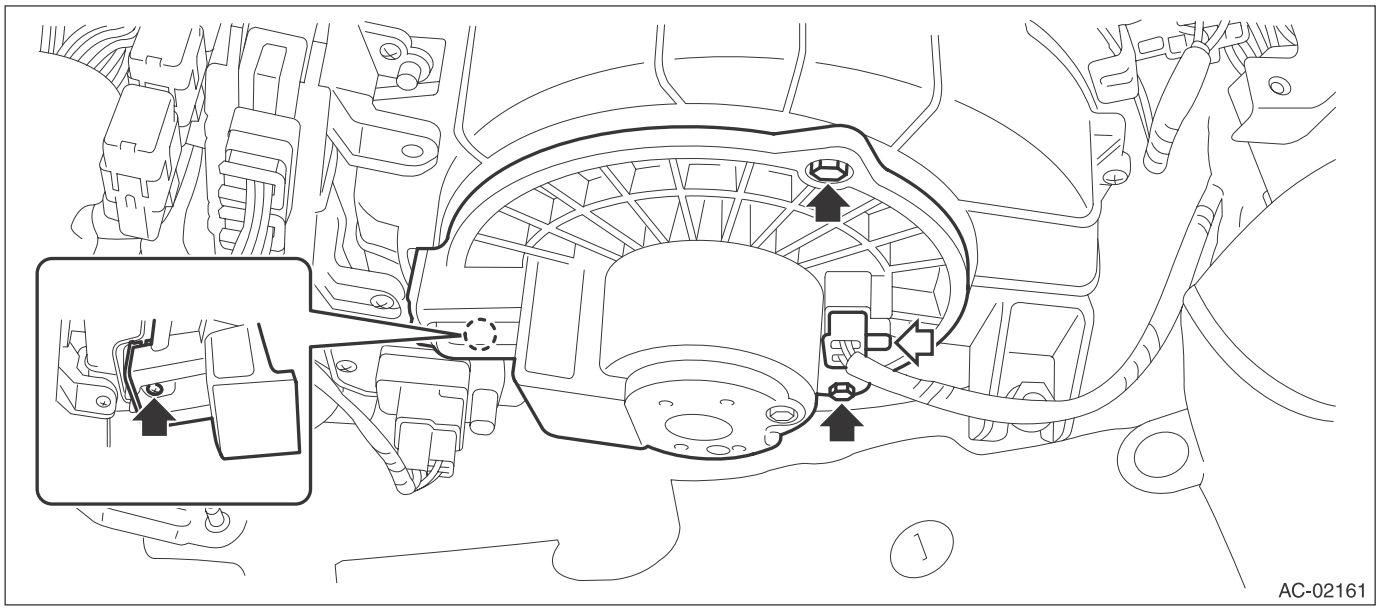

B: INSTALLATION

Install each part in the reverse order of removal.

C: INSPECTION

1) Disconnect the blower motor connector.
2) Apply battery voltage between the blower motor terminals.
   (1) Connect the positive (+) cable to the No. 2 terminal.
   (2) Connect the negative (–) cable to the No. 1 terminal and check that the blower motor rotates normally.

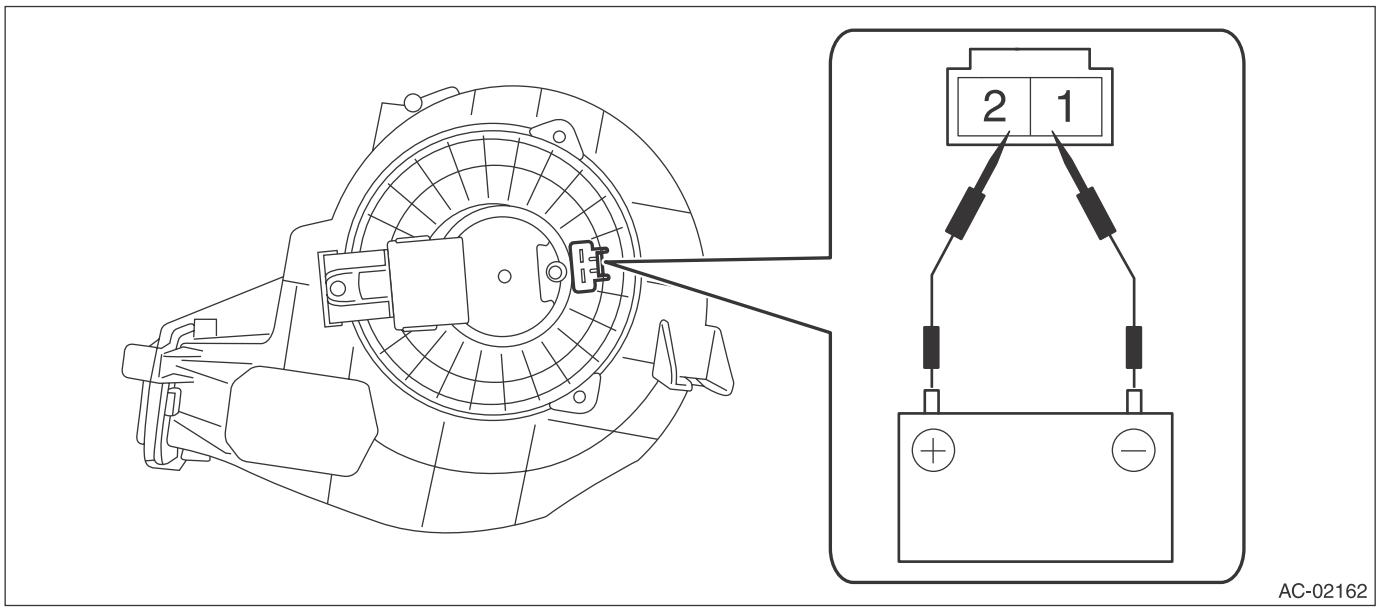

3) If the blower motor does not operate normally, replace the blower motor.

10.Power Transistor (Auto A/C Model)

A: REMOVAL

1) Disconnect the ground cable from battery.
2) Remove the clips, and remove the glove box under cover.

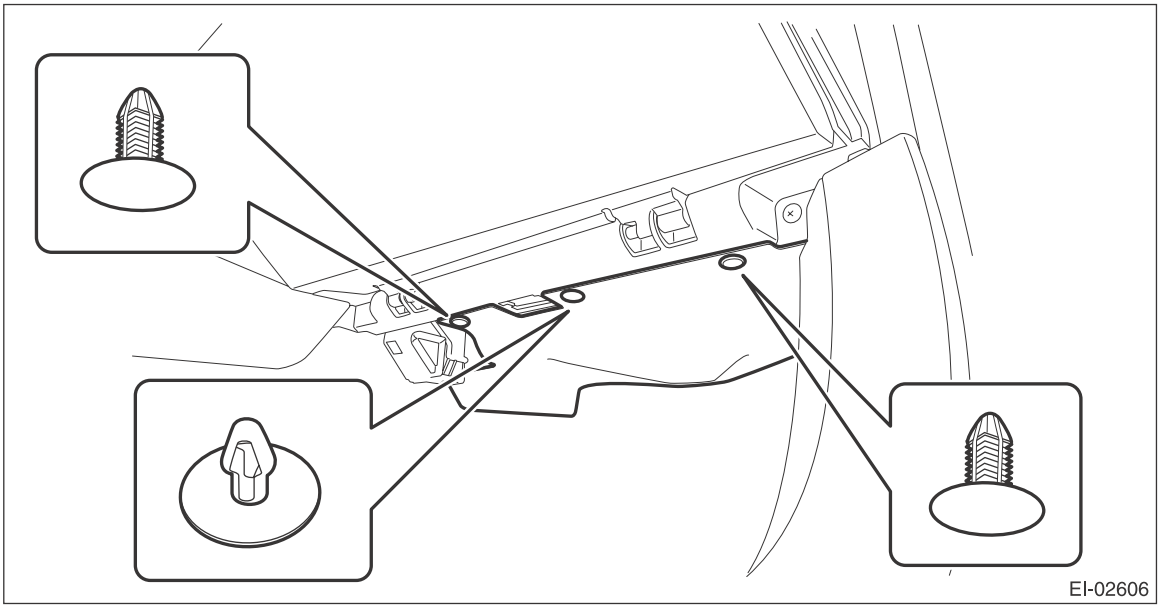

3) Remove the power transistor.
   (1) Disconnect the connector.
   (2) Remove the screws and remove the power transistor.

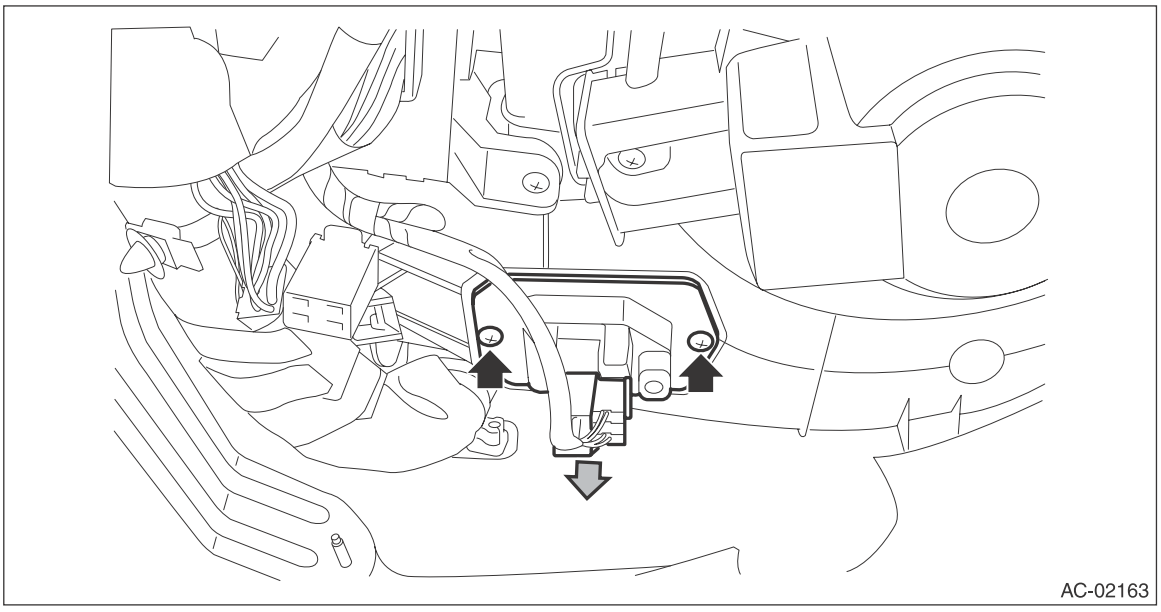

B: INSTALLATION

Install each part in the reverse order of removal.

11.Blower Resistor (Manual A/C Model)

A: REMOVAL

1) Disconnect the ground cable from battery.
2) Remove the clips, and remove the glove box under cover.

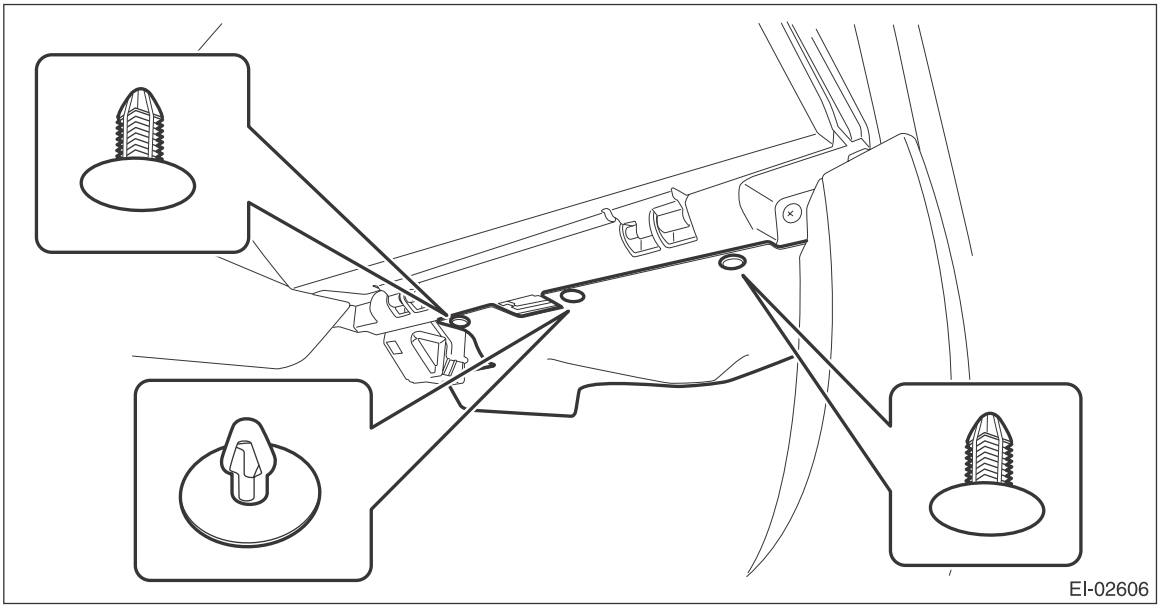

3) Remove the blower resistor.
   (1) Disconnect the connector.
   (2) Remove the screw and remove the blower resistor.

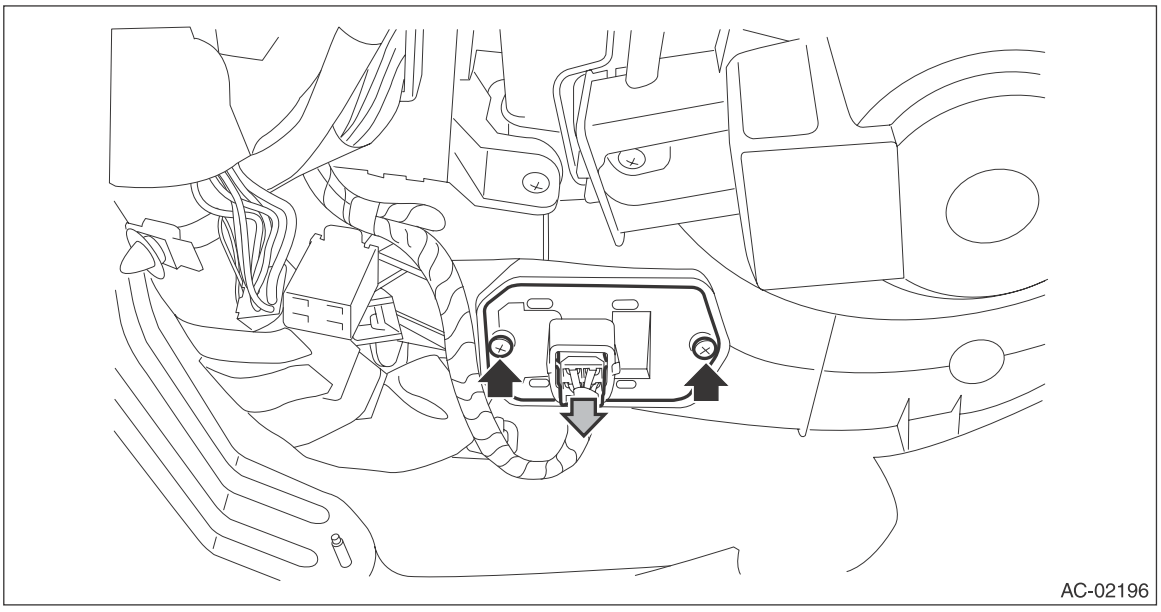

B: INSTALLATION

Install each part in the reverse order of removal.

C: INSPECTION

1) Disconnect the blower resistor connector.
2) Check the resistance between blower resistor terminals.

Preparation tool: Circuit tester

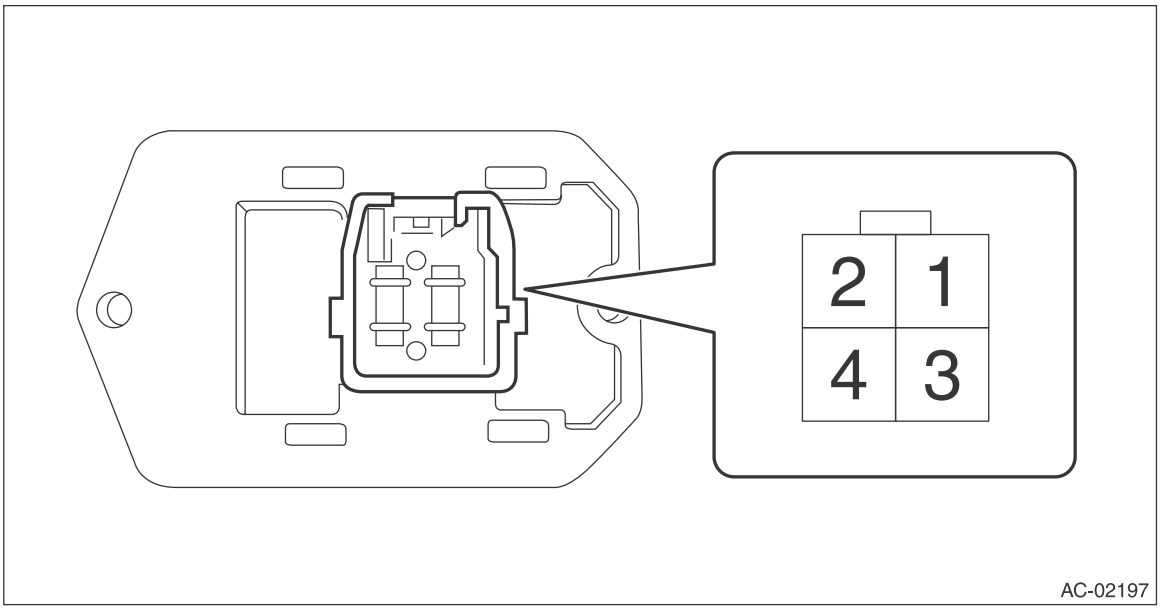

Terminal No.	Standard
4 — 2	Approx. 0.44 Ω
4 — 3	Approx. 1.12 Ω
4 — 1	Approx. 2.92 Ω

3) Replace the blower resistor if the inspection result is not within the standard value.

12.Heater Core

A: REMOVAL

1) Disconnect the ground cable from battery.
2) Using the refrigerant recovery system, drain the refrigerant. <Ref. to AC-18, PROCEDURE, Refrigerant Recovery Procedure.>
3) Drain the coolant from the radiator.
- H4 non-turbo model: <Ref. to CO(H4SO)-14, DRAINING OF ENGINE COOLANT, REPLACEMENT, Engine Coolant.>
- H4 turbo model: <Ref. to CO(H4DOTC)-14, DRAINING OF ENGINE COOLANT, REPLACEMENT, Engine Coolant.>
- H6 model: <Ref. to CO(H6DO)-12, DRAINING OF ENGINE COOLANT, REPLACEMENT, Engine Coolant.>

4) Remove the connector and bolts, and remove the expansion valve and AC pipes from the evaporator.
5) Loosen the heater hose clamps and remove the hoses.

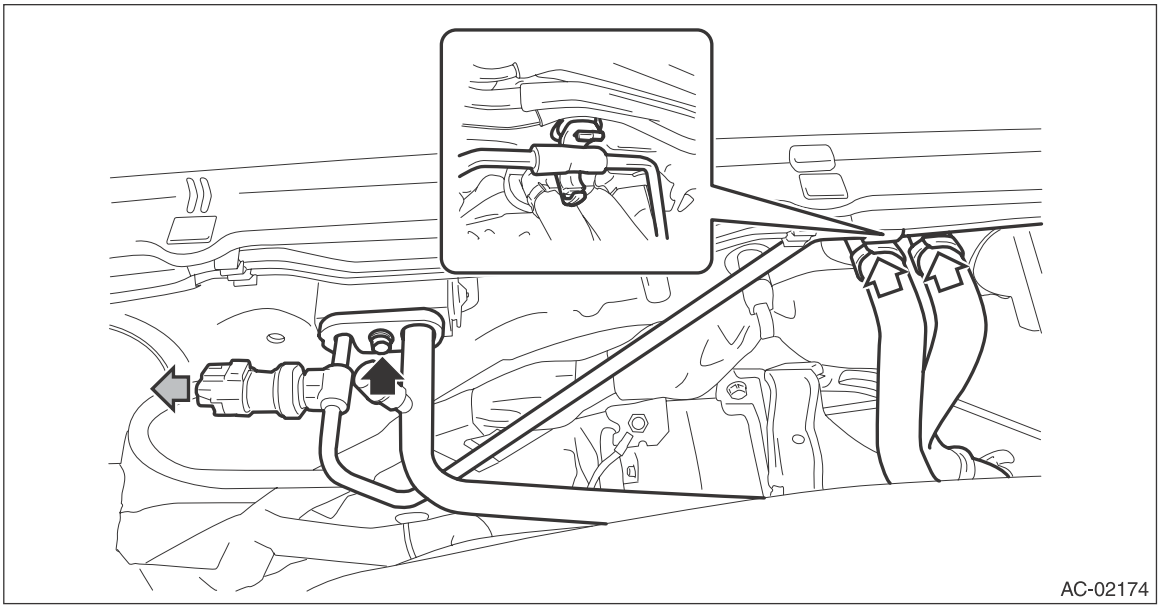

6) Remove the instrument panel assembly. <Ref. to EI-75, REMOVAL, Instrument Panel Assembly.>
7) Remove the heater and cooling unit.
   (1) Release the lock and remove the relay holder.

(2) Remove the nuts, and remove the engine control module (ECM).

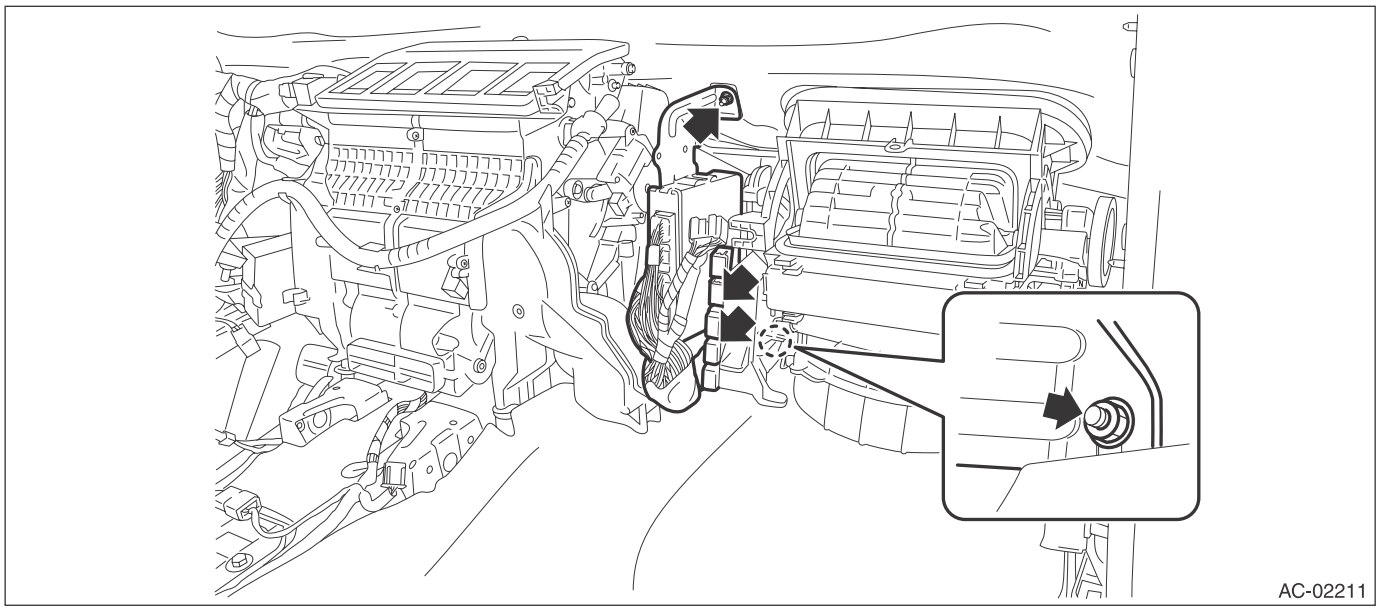

(3) Remove the bolts and remove the heater and cooling unit.

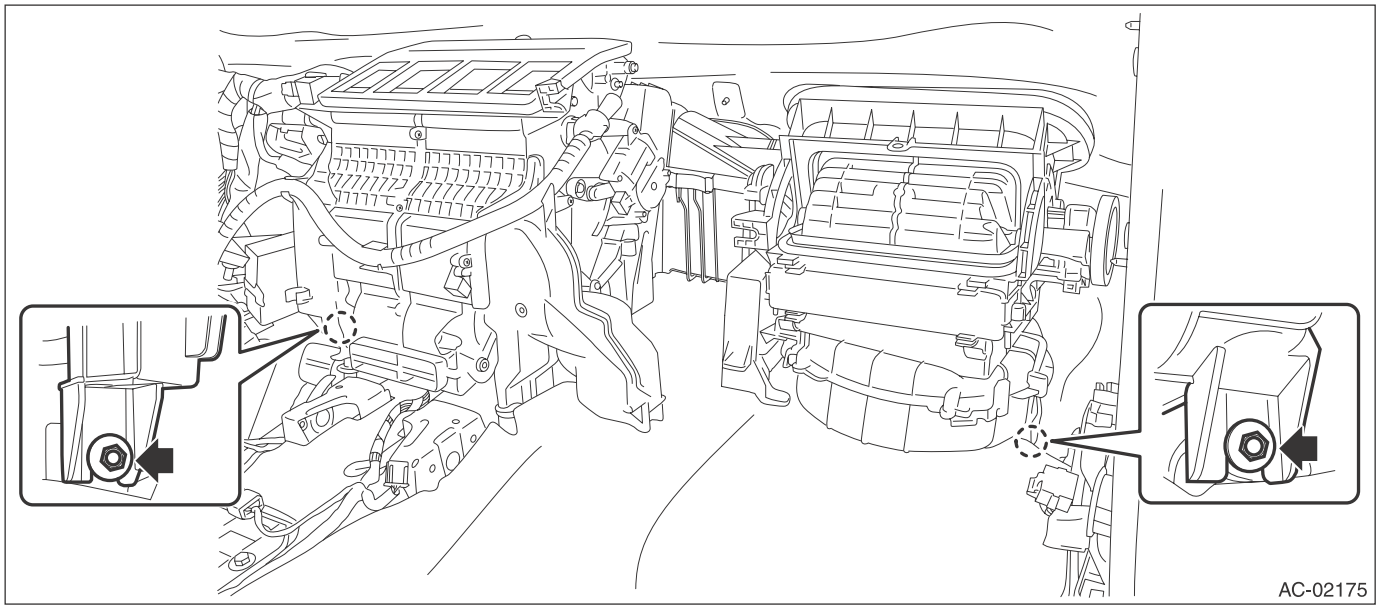

8) Disconnect the claws and then remove the aspirator hose.

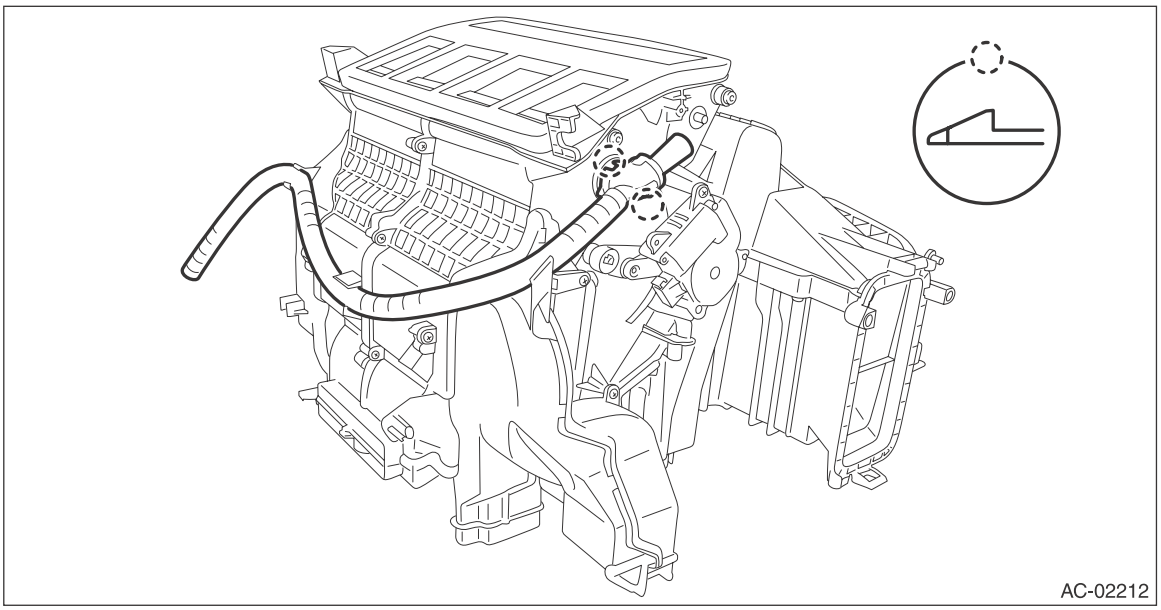

9) Remove the screws and remove the foot duct (LH).

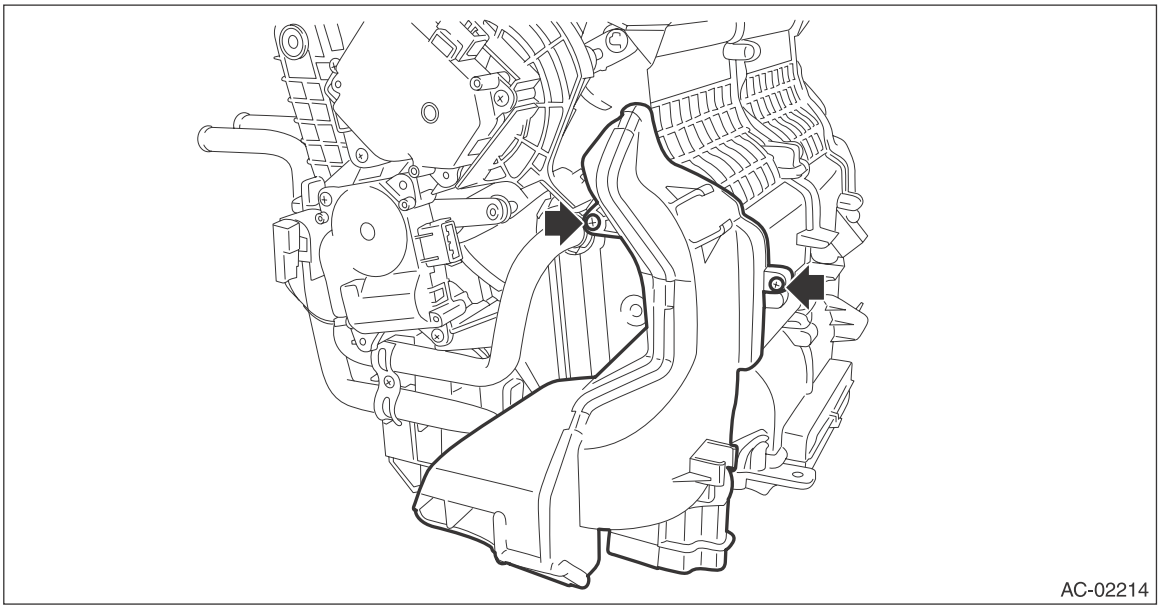

10) Remove the heater core.

(1) Remove the screw and remove the heater pipe clamp.

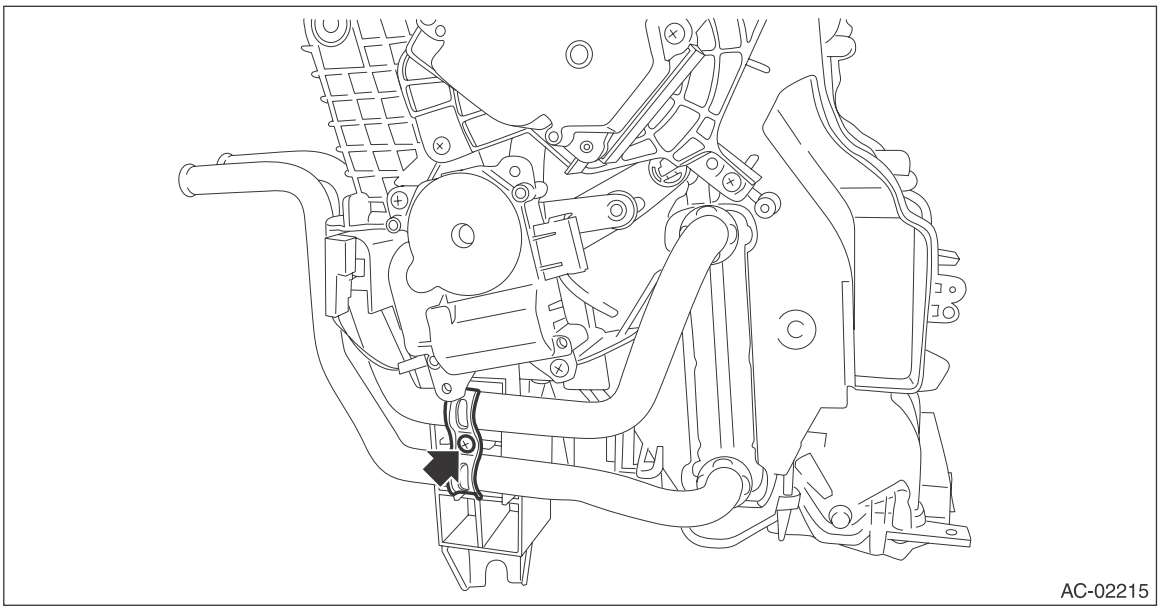

(2) Pull out the heater core from the heater and cooling unit assembly.

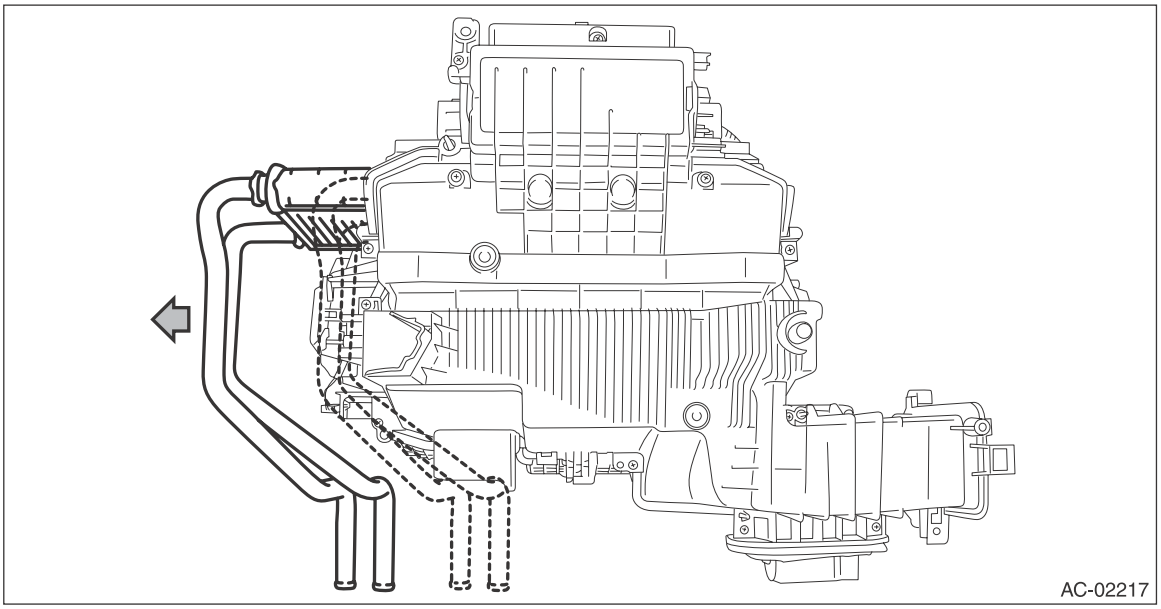

B: INSTALLATION

CAUTION:
- **Do not start the engine before charging refrigerant.**
- **If the engine is started with no refrigerant charge, replace the compressor.**
- **If the engine may have been started with no refrigerant charge, check for any diagnosis code (DTC) using Subaru Select Monitor. If the code B1644 (Refrigerant not sealed drive error) is output, replace the compressor.**
- **Replace the O-rings and pipe clamps with new parts, and attach securely.**

1) Install each part in the reverse order of removal.
2) Fill engine coolant.
- H4 non-turbo model: <Ref. to CO(H4SO)-14, FILLING OF ENGINE COOLANT, REPLACEMENT, Engine Coolant.>
- H4 turbo model: <Ref. to CO(H4DOTC)-14, FILLING OF ENGINE COOLANT, REPLACEMENT, Engine Coolant.>
- H6 model: <Ref. to CO(H6DO)-12, FILLING OF ENGINE COOLANT, REPLACEMENT, Engine Coolant.>

3) Charge refrigerant. <Ref. to AC-19, PROCEDURE, Refrigerant Charging Procedure.>

Tightening torque:
- ***Heater cooling unit: <Ref. to AC-4, HEATER COOLING UNIT, COMPONENT, General Description.>***
- ***Blower motor unit: <Ref. to AC-6, BLOWER MOTOR UNIT, COMPONENT, General Description.>***

13.Control Panel

A: REMOVAL

1. AUTO A/C MODEL

1) Disconnect the ground cable from battery.
2) Remove the center panel assembly.

CAUTION:
Do not put your finger on the fin of the air vent grille. Doing so may damage the fin.

(1) Attach the protective tape (a) to the meter visor.

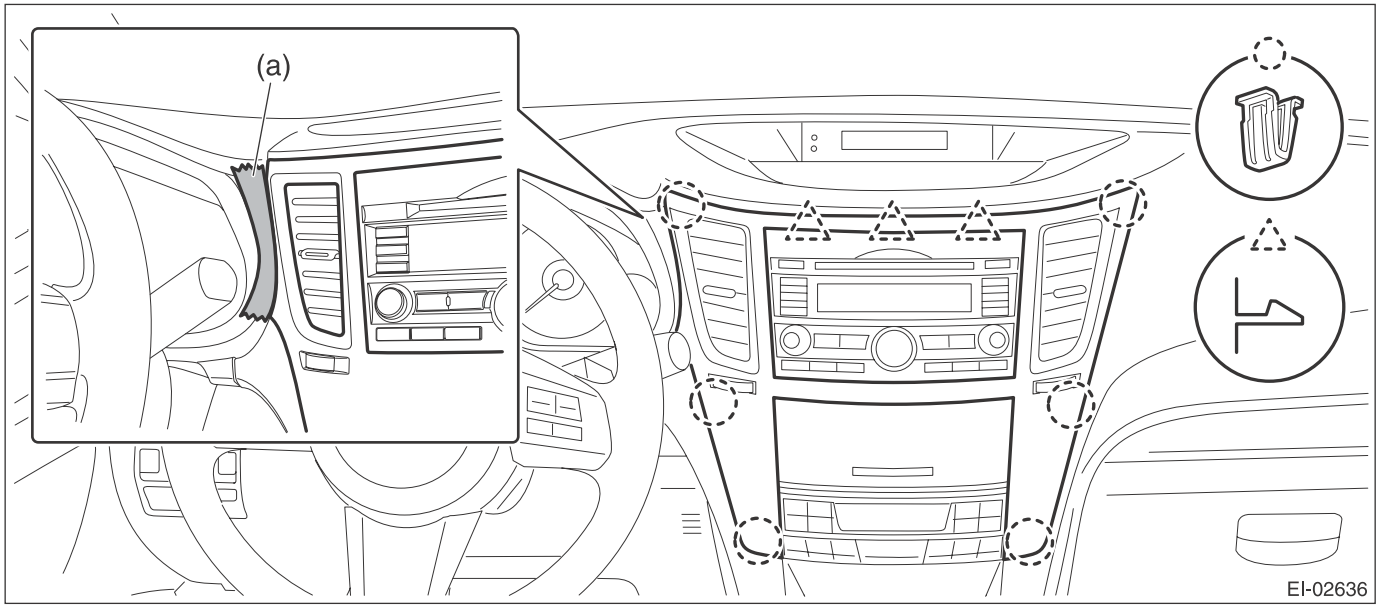

(2) Insert a finger into the air vent grille and release the left and right clips at the top of the center panel. (A), (B)
(3) Insert a finger into the air vent grille and release the left and right clips at the center of the center panel. (C), (D)

(4) Release the clips at the bottom of the center panel and remove the center panel assembly.

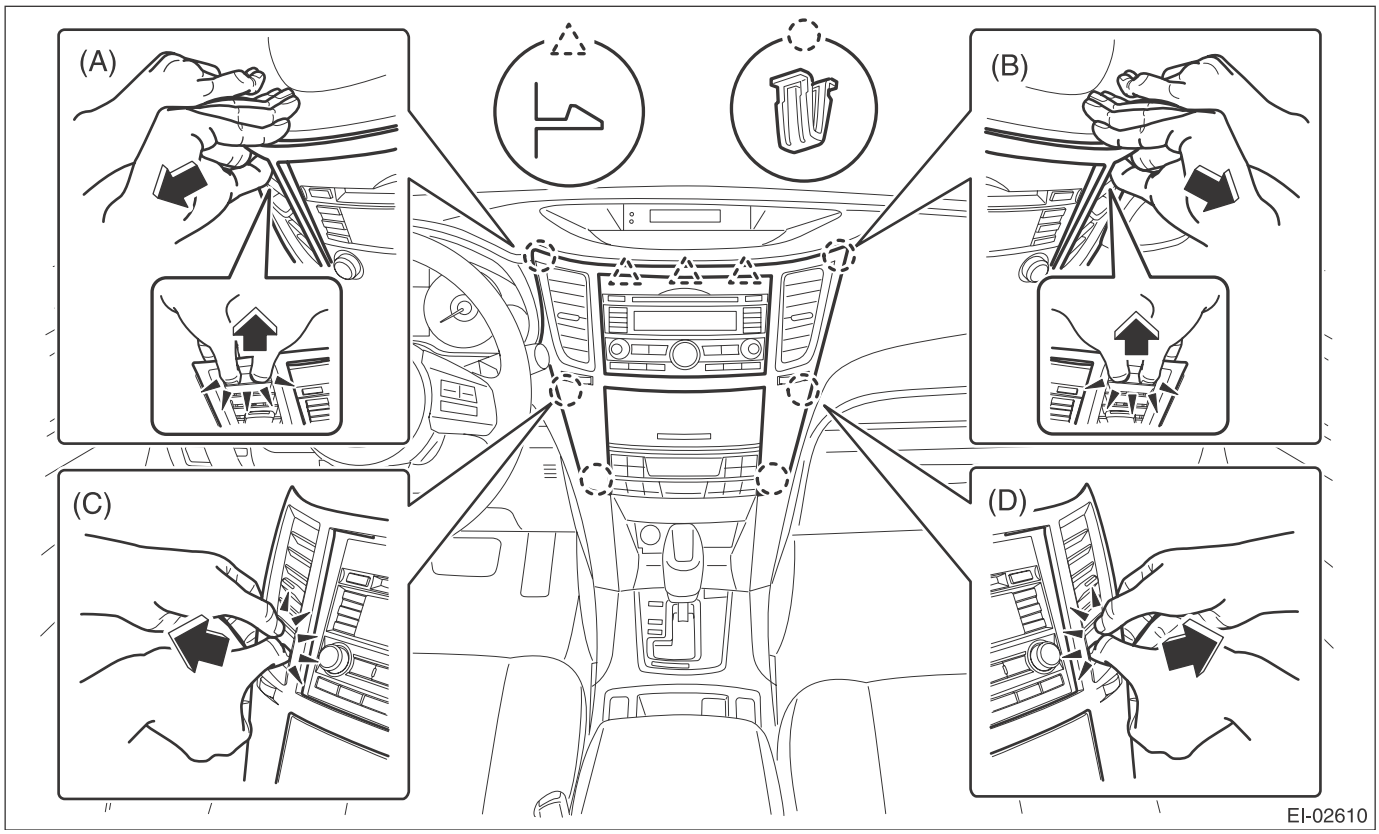

3) Remove the audio assembly.
(1) Remove the left and right screws, and partially pull the audio out from center console.
(2) Disconnect the connectors, and remove the audio assembly.

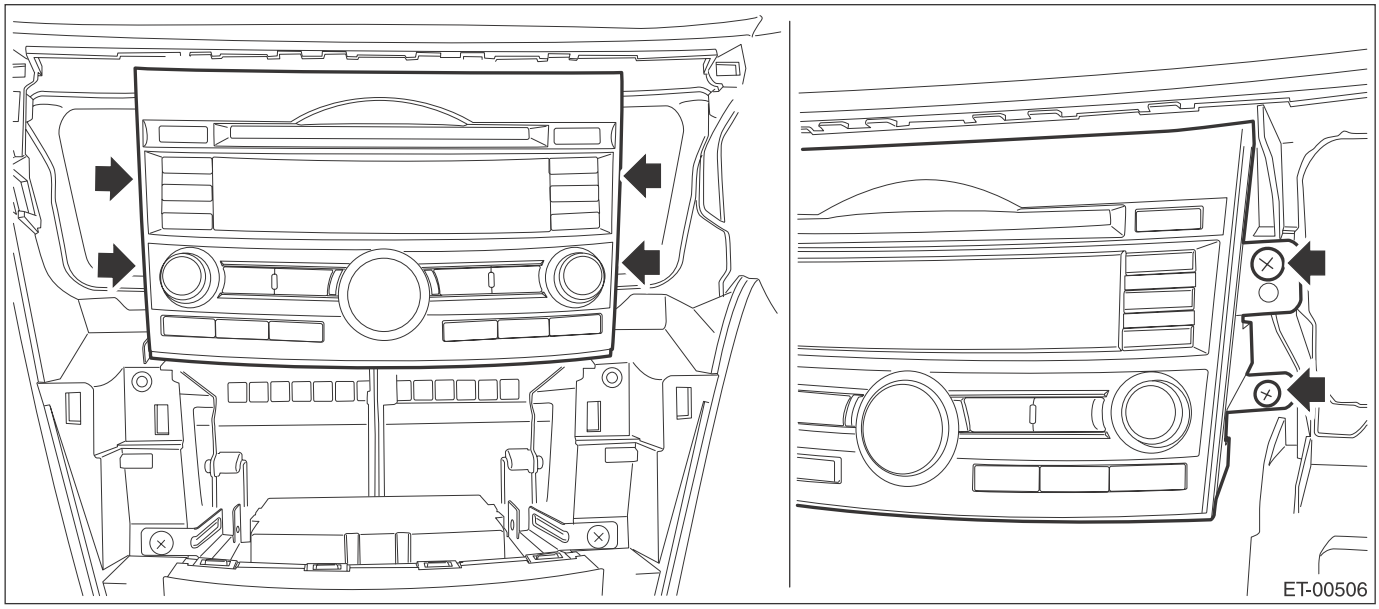

4) Remove the navigation assembly. (model with navigation)
(1) Remove the left and right screws.

(2) Disconnect the connectors, and remove the navigation assembly.

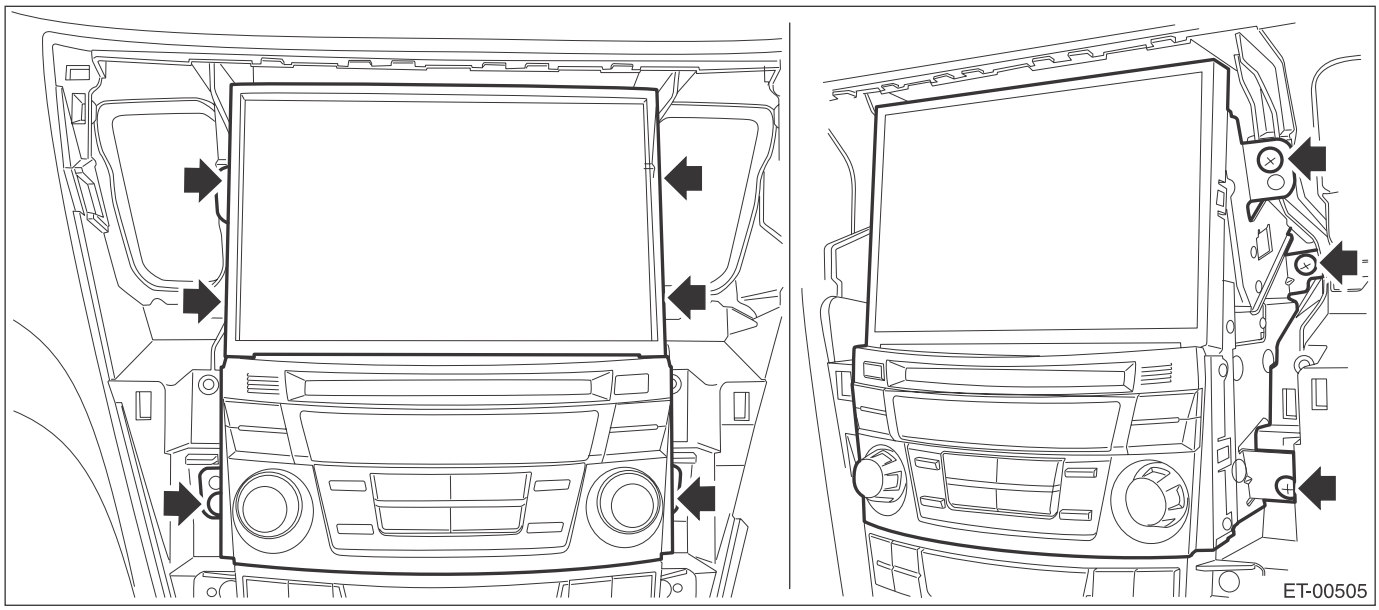

5) Remove the control panel.

(1) Remove the screws and release the clip.

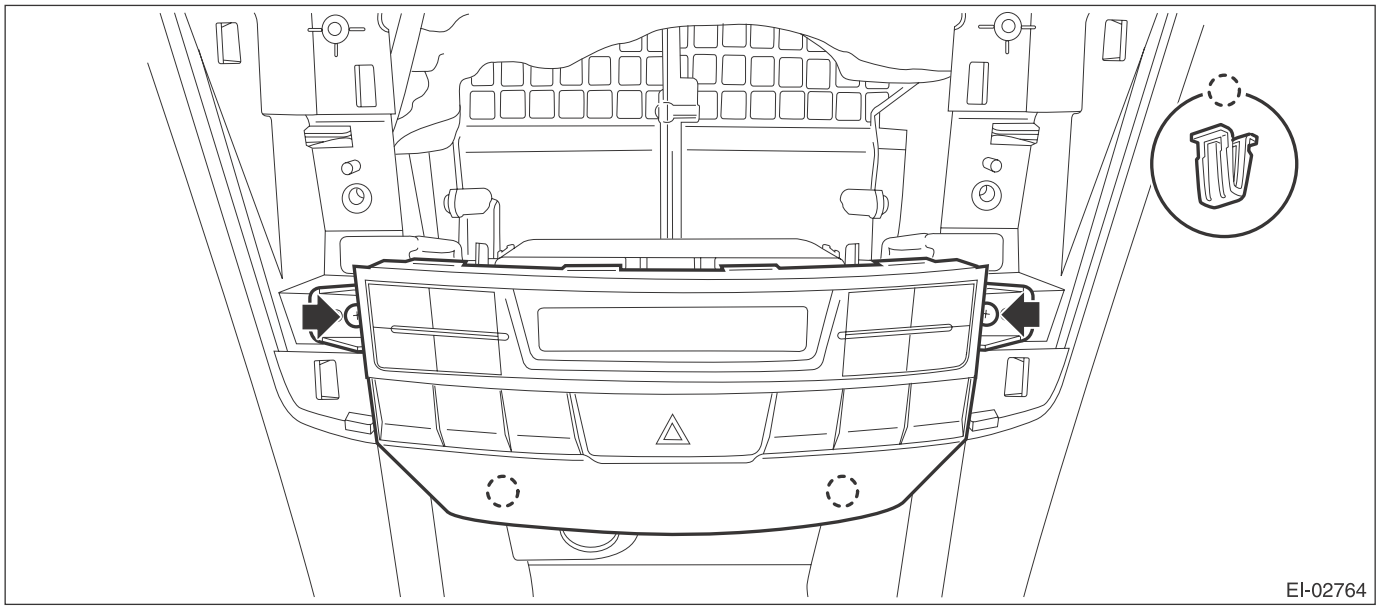

(2) Pull forward the control module and disconnect the connector.

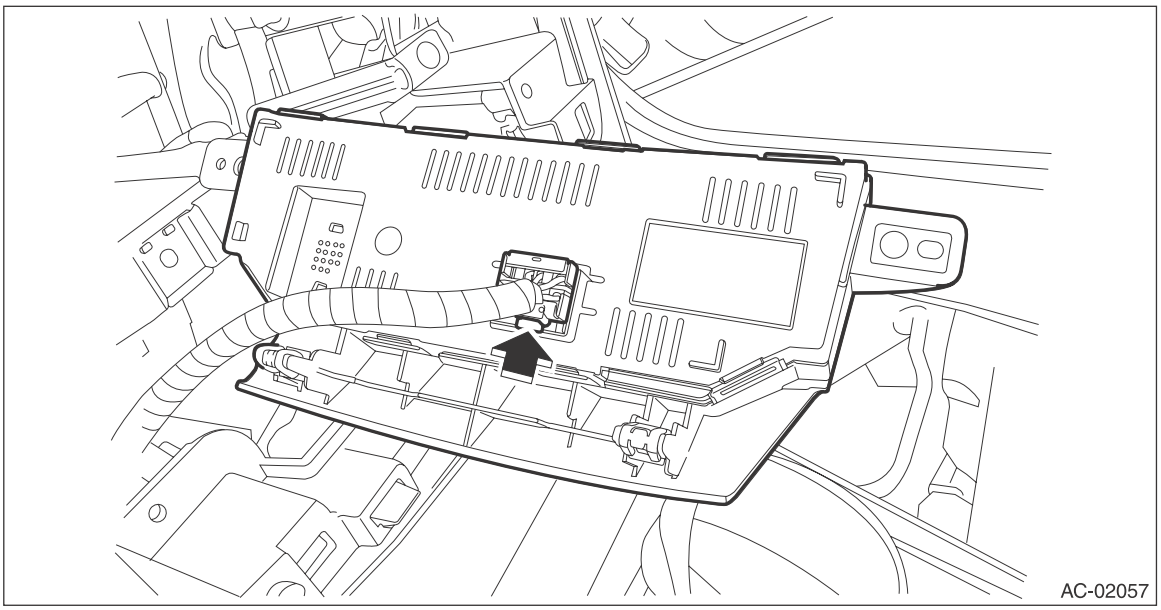

2. MANUAL A/C MODEL

1) Disconnect the ground cable from battery.
2) Remove the center panel assembly.

CAUTION:
Do not put your finger on the fin of the air vent grille. Doing so may damage the fin.

(1) Attach the protective tape (a) to the meter visor.

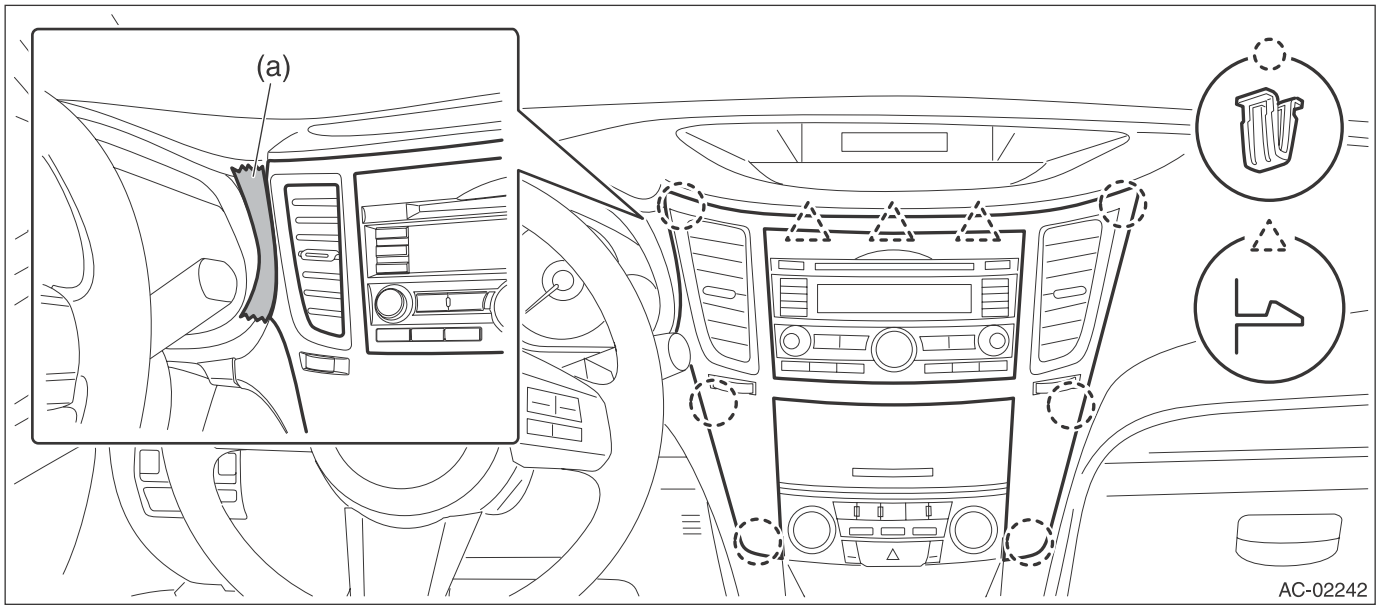

(2) Insert a finger into the air vent grille and release the left and right clips at the top of the center panel. (A), (B)
(3) Insert a finger into the air vent grille and release the left and right clips at the center of the center panel. (C), (D)

(4) Release the clips at the bottom of the center panel and remove the center panel assembly.

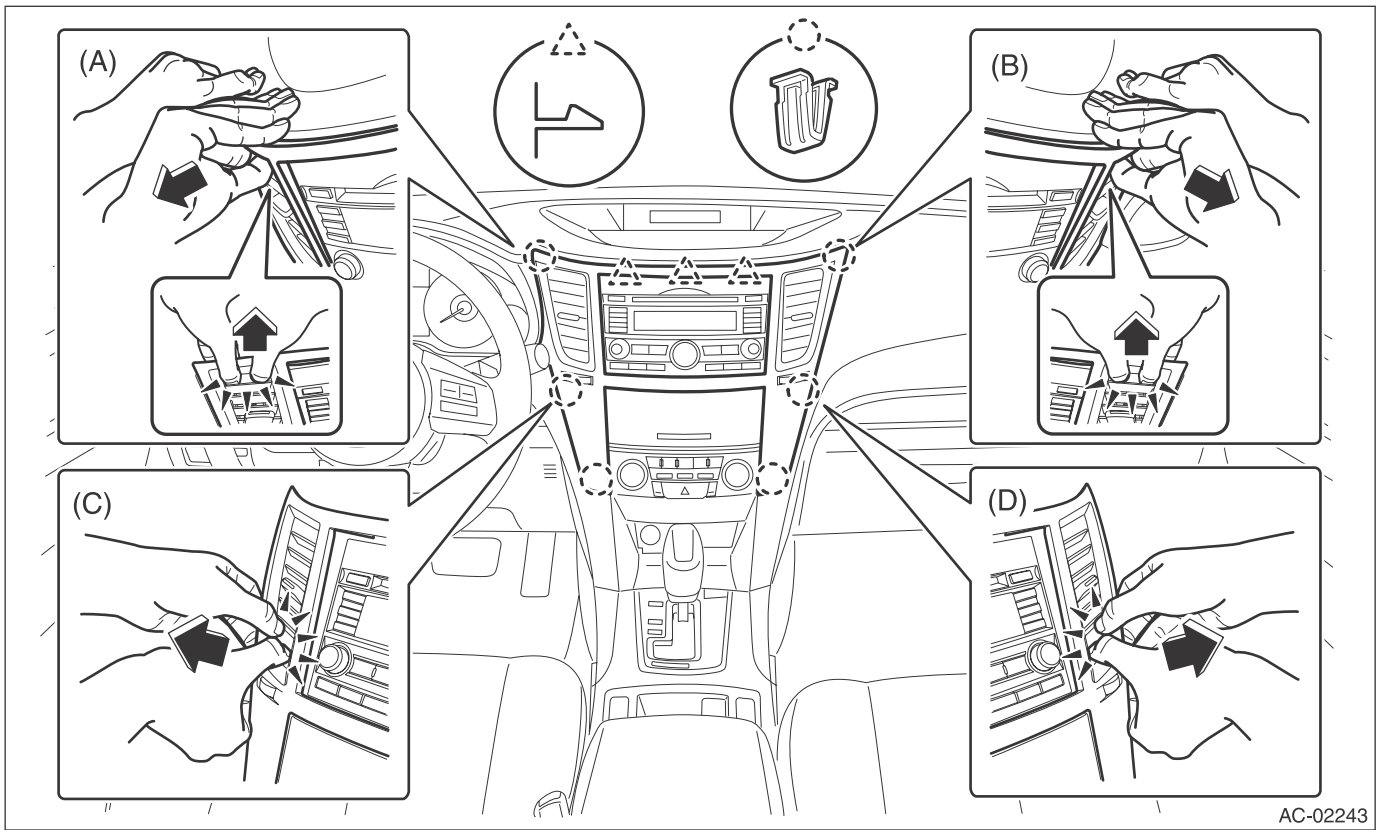

3) Remove the audio assembly.
(1) Remove the left and right screws, and partially pull the audio out from center console.
(2) Disconnect the connectors, and remove the audio assembly.

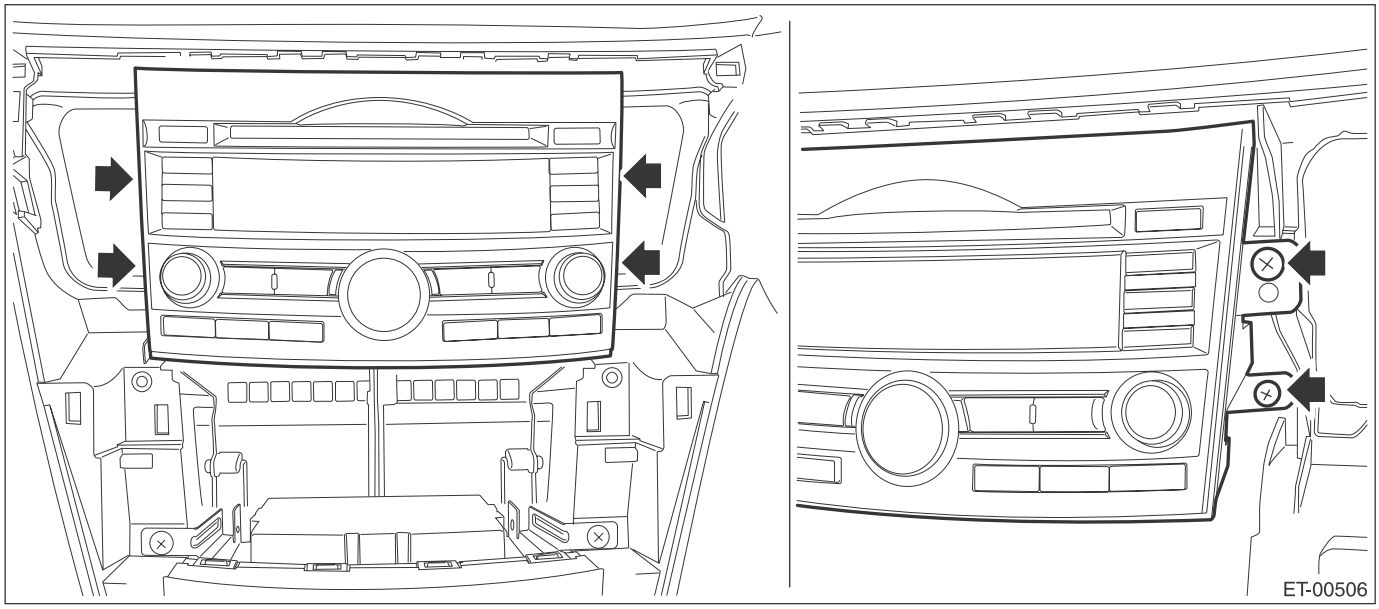

4) Remove the navigation assembly. (model with navigation)
(1) Remove the left and right screws.

(2) Disconnect the connectors, and remove the navigation assembly.

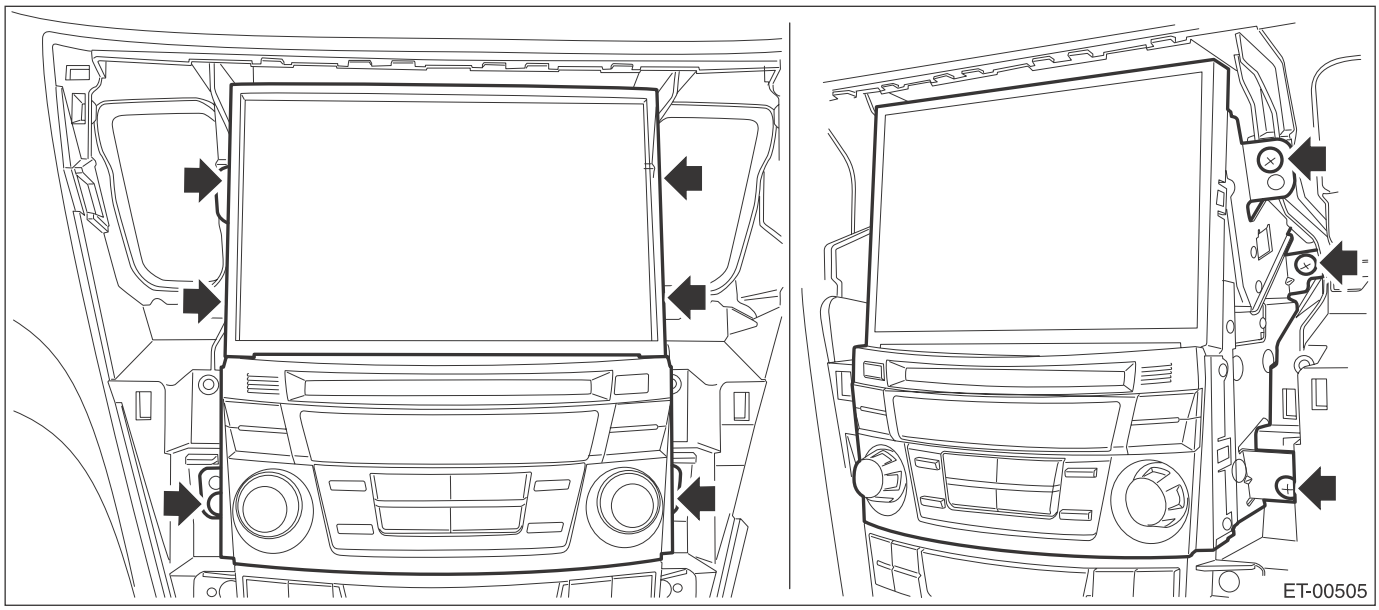

5) Remove the control panel.

(1) Remove the screws and release the clip.

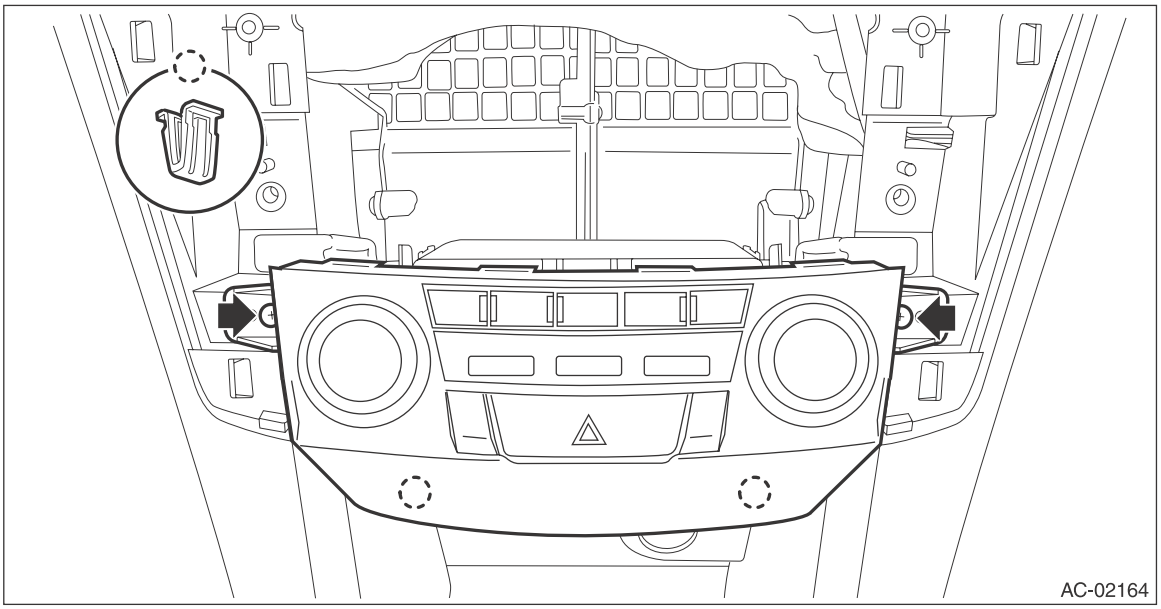

(2) Pull the control panel and disconnect the connector.

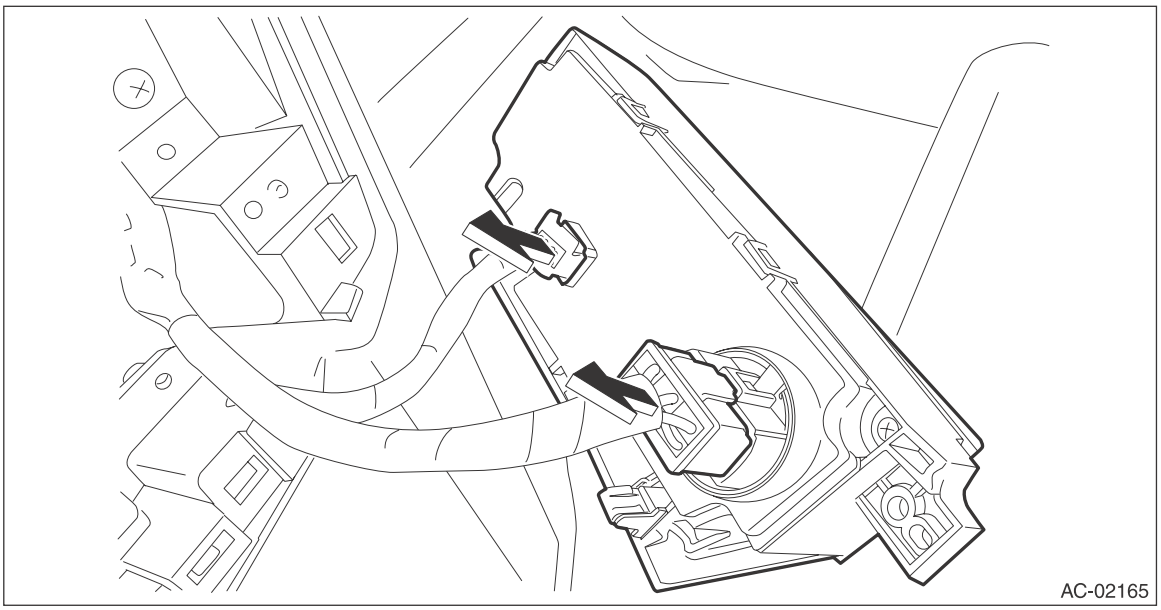

B: INSTALLATION

Install each part in the reverse order of removal.

14.Control Unit

A: REMOVAL

1) Disconnect the ground cable from battery.
2) Remove the glove box. <Ref. to EI-65, REMOVAL, Glove Box.>
3) Remove the control module.
   (1) Release the lock and remove the relay bracket.

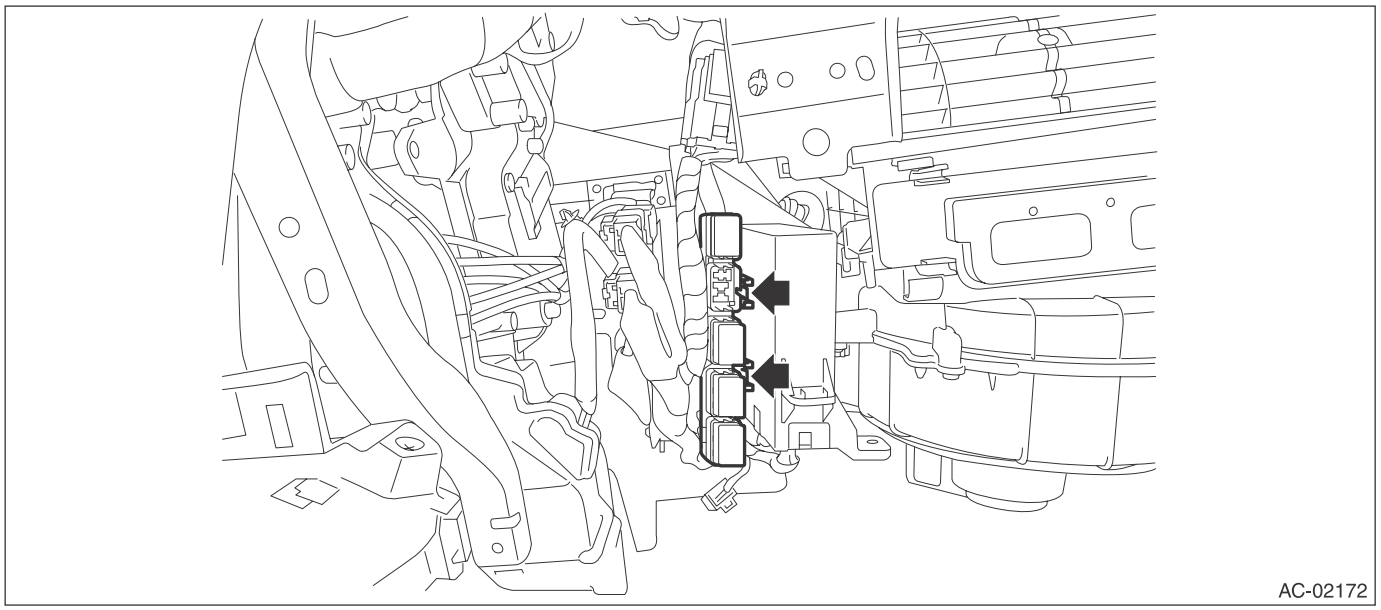
AC-02172

   (2) Disconnect the connector.
   (3) Remove the screws, and remove the control module.

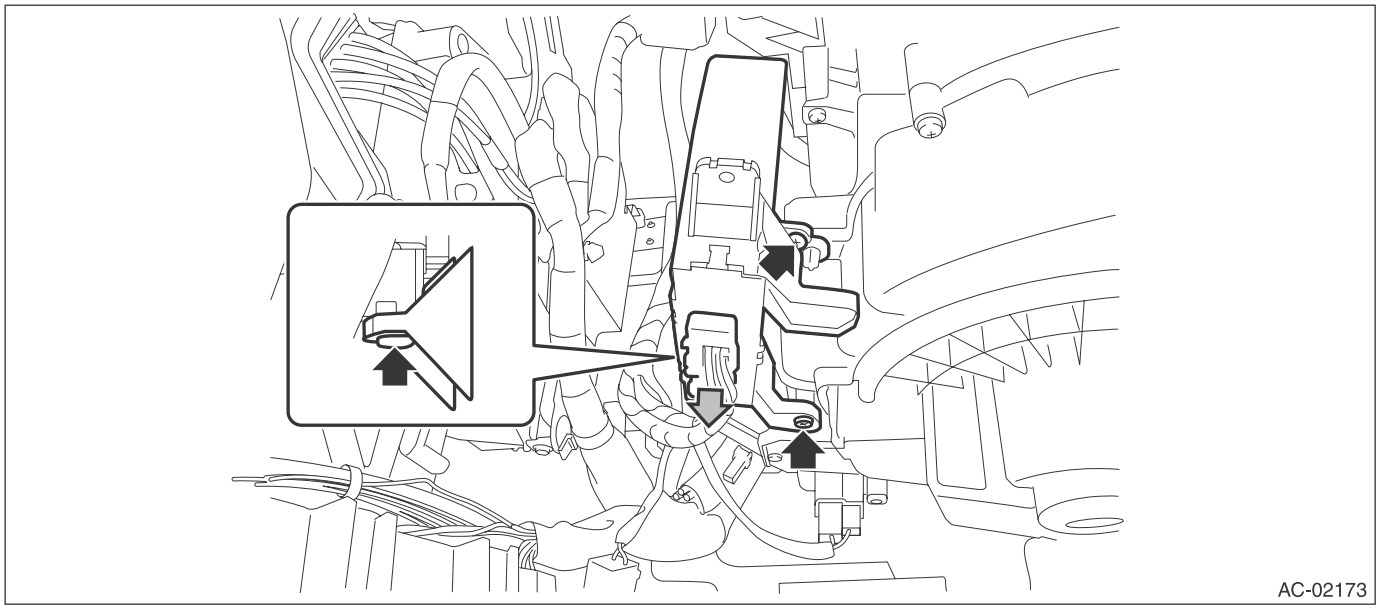
AC-02173

B: INSTALLATION

Install each part in the reverse order of removal.

15.Compressor

A: REMOVAL

1) Perform compressor oil return operation. <Ref. to AC-24, PROCEDURE, Compressor Oil.>
2) Turn the A/C switch to OFF and stop the engine.
3) Using the refrigerant recovery system, drain the refrigerant. <Ref. to AC-18, PROCEDURE, Refrigerant Recovery Procedure.>
4) Disconnect the ground cable from battery.
5) Remove the V-belts.
- H4 non-turbo model: <Ref. to ME(H4SO)-42, REMOVAL, V-belt.>
- H4 turbo model: <Ref. to ME(H4DOTC)-42, REMOVAL, V-belt.>
- H6 model: <Ref. to ME(H6DO)-48, REMOVAL, V-belt.>

6) Move the alternator harness to the right.
   (1) Remove the nuts and connector.
   (2) Release the lock and move the alternator harness to the right.

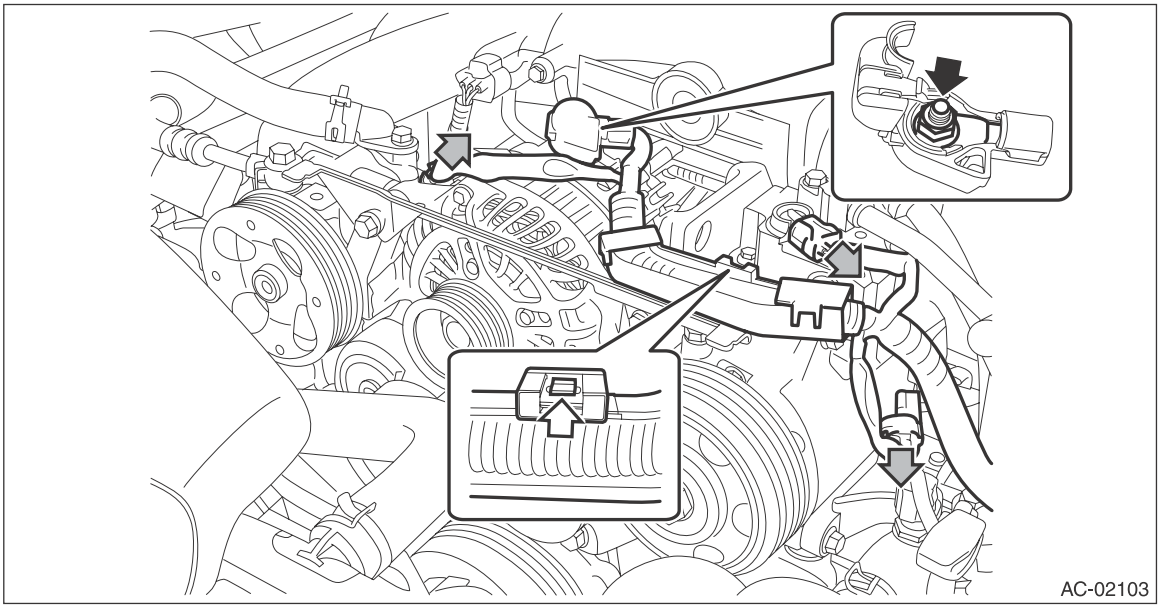
AC-02103

7) Remove the bolts and then remove the collector cover bracket.

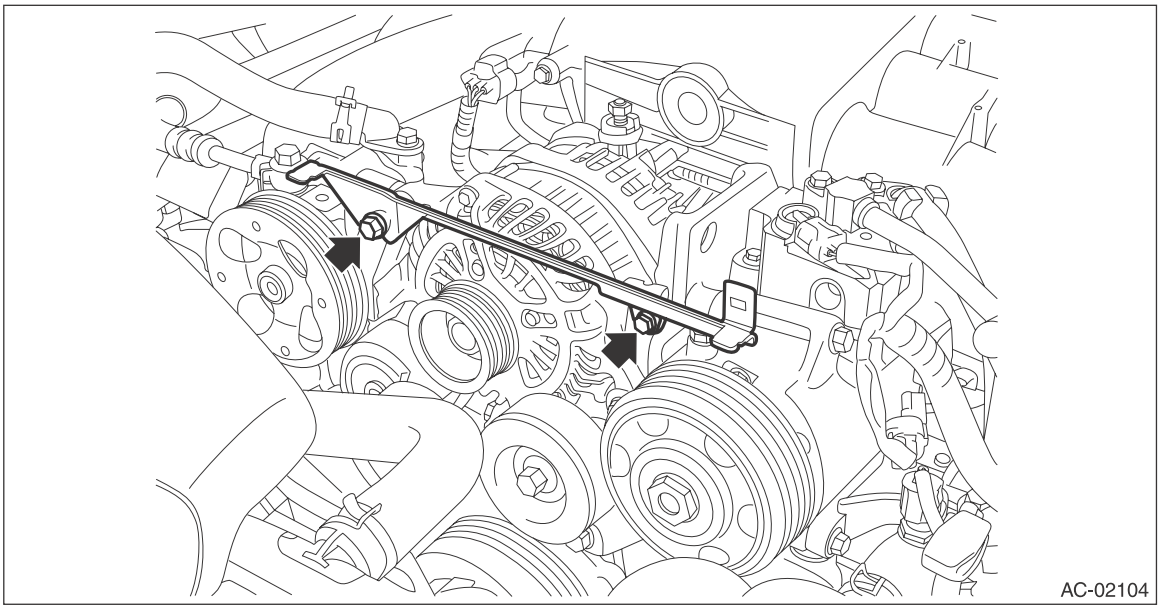
AC-02104

8) Remove the bolt and remove the low-pressure hose and high-pressure hose.

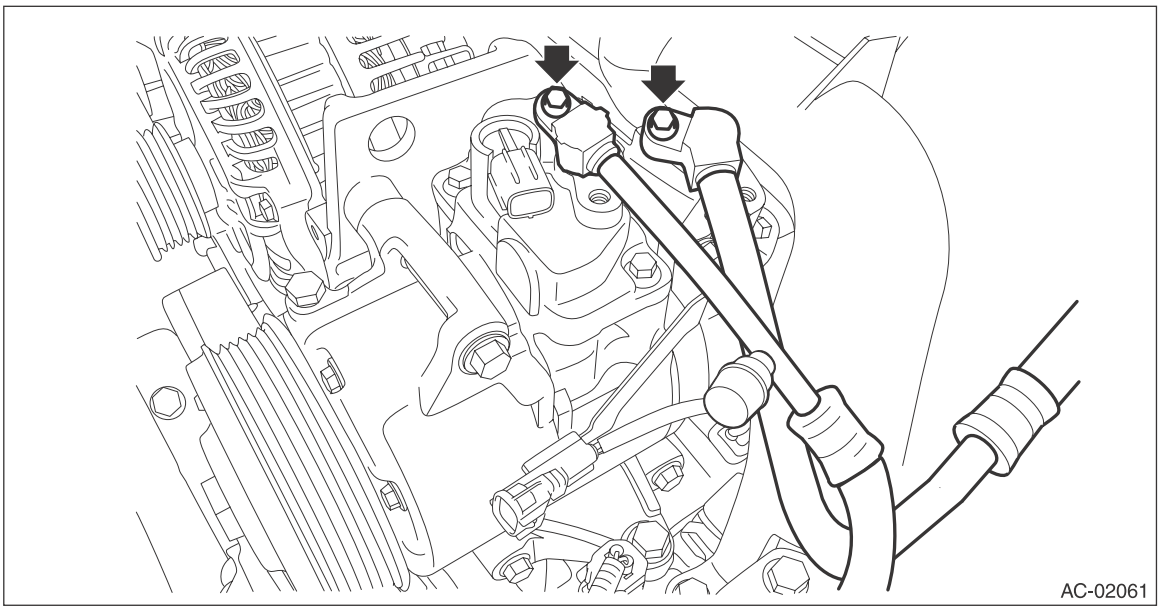

9) Remove the compressor.
(1) Disconnect the water temperature sensor connector.
(2) Remove the bolts and remove the compressor.

NOTE:
• Since the compressor cannot be removed by itself, remove it with the loosened bolts inserted in the bracket.
• Be careful not to damage the pulley and sensor.

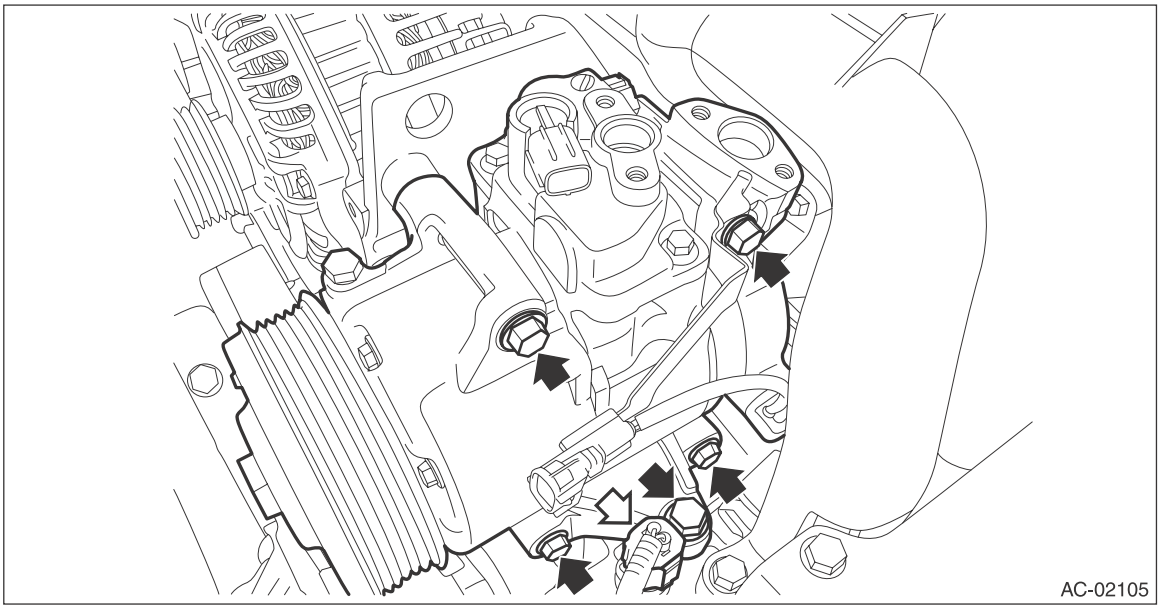

B: INSTALLATION

CAUTION:
- **Replace the O-rings on low/high pressure hoses with new parts, and apply compressor oil.**
- **If the compressor is replaced, adjust the amount of the compressor oil. <Ref. to AC-24, PROCEDURE, Compressor Oil.>**
- **After installing the compressor, do not start the engine until the A/C system is charged with refrigerant.**
- **If the engine is started with no refrigerant charge, replace the compressor.**
- **If the engine may have been started with no refrigerant charge, check for any diagnosis code (DTC) using Subaru Select Monitor. If the code B1644 (Refrigerant not sealed drive error) is output, replace the compressor.**

1) Install each part in the reverse order of removal.
2) Charge refrigerant. <Ref. to AC-19, PROCEDURE, Refrigerant Charging Procedure.>
3) After installing the compressor, perform a break-in operation according to the following steps.

NOTE:
Do not increase the engine speed to and above 4,000 rpm unless the break-in operation finishes.
(1) Check that all connectors are locked securely.
(2) Reset the control module. (Disconnect and then connect the connector)
(3) Attach a delivery (test) mode fuse to the main fuse box.
(4) Set the airflow adjustment dial to MAX (4th position). (manual A/C model)
(5) Connect the Subaru Select Monitor, and then select the {Break-in variable compressor drive} mode to display the {Break-in variable compressor drive, finish status} according to the procedures.
(6) Start and idle the engine at or below 1,800 rpm. (The compressor operation is automatically changed to the break-in operation mode.)
(7) Stop the engine when the {Break-in variable compressor drive, finish status} is changed from “incomplete” → “Finished”.
(8) Remove the delivery (test) mode fuse from the main fuse box.
(9) The break-in operation finishes.

Tightening torque:

- ***Air conditioning unit: <Ref. to AC-8, AIR CONDITIONING UNIT, COMPONENT, General Description.>***
- ***Compressor: <Ref. to AC-9, COMPRESSOR, COMPONENT, General Description.>***

16.Condenser

A: REMOVAL

1) Using the refrigerant recovery system, drain the refrigerant. <Ref. to AC-18, PROCEDURE, Refrigerant Recovery Procedure.>
2) Remove the clips and remove the air intake duct.

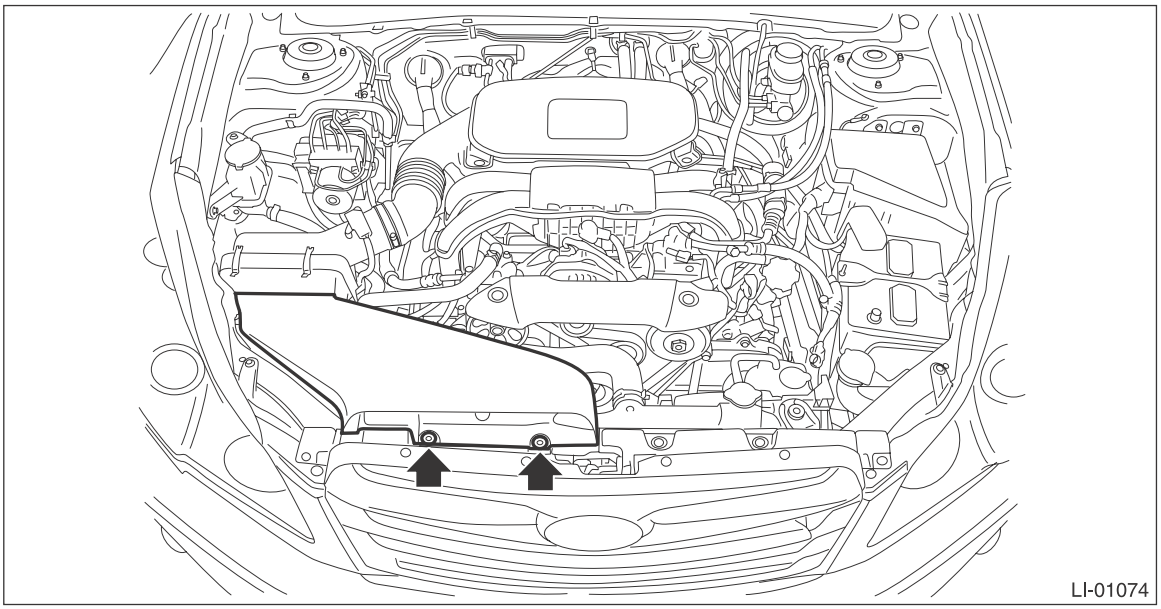

3) Remove the clips and remove the grille bracket.

NOTE:
To prevent damage to the grille bracket, make sure to remove all clips.

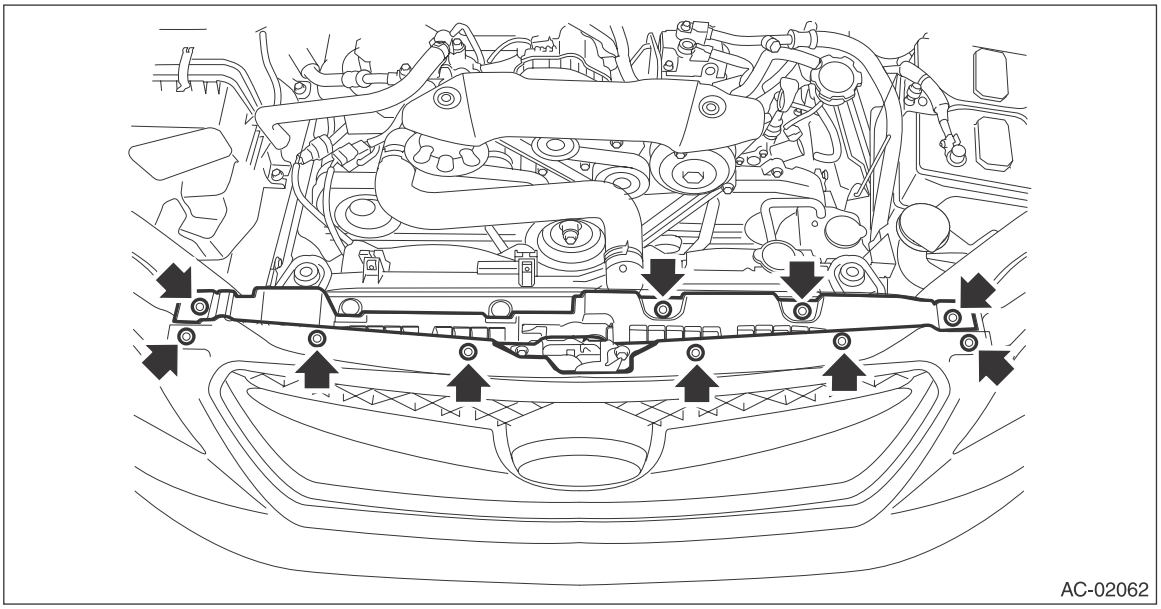

4) Remove the bolts and disconnect the high pressure hose and A/C pipe from the condenser.

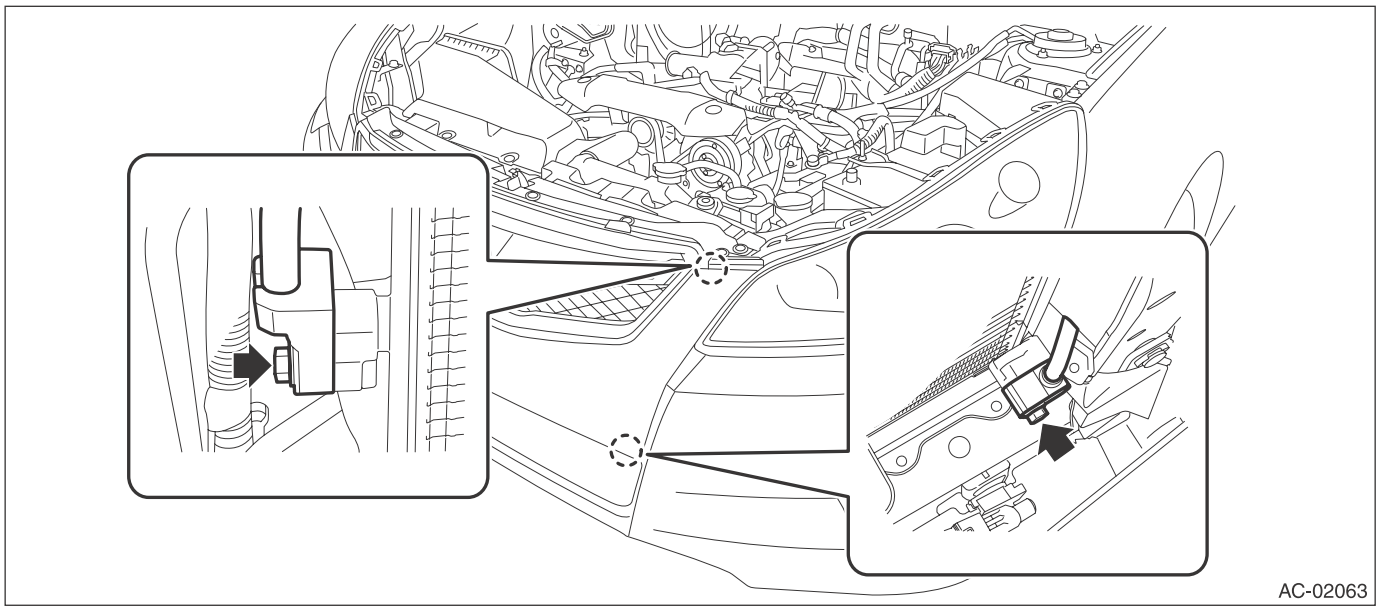

5) Remove the bolts and remove the radiator upper bracket.

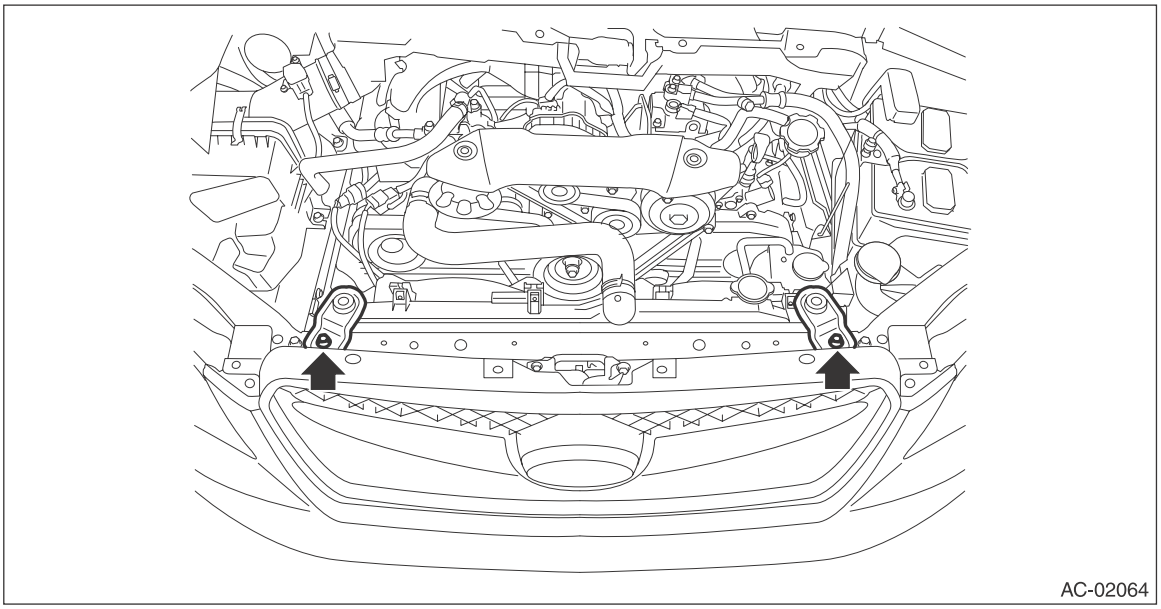

6) Remove the condenser.

(1) Remove the bolt.

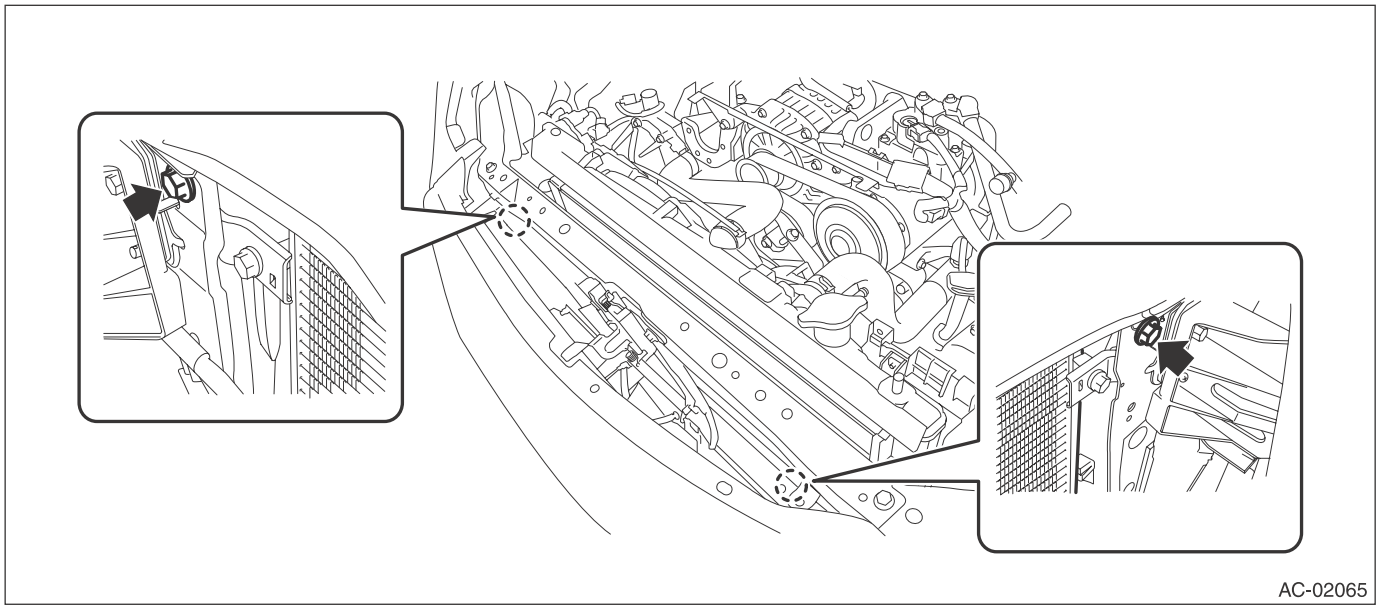

(2) By lifting the condenser, pull it out through the space between the radiator and the radiator panel.

CAUTION:
Be careful not to damage the condenser fins. If a damaged fin is found, repair it using a thin screwdriver.

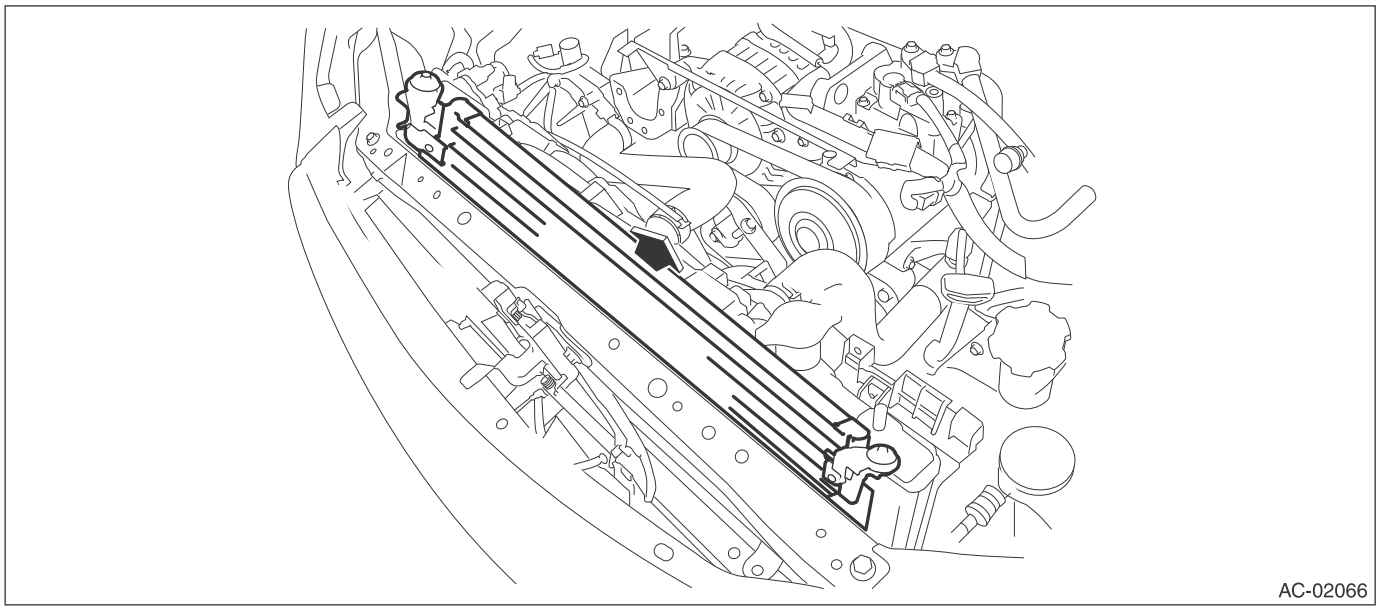

B: INSTALLATION

CAUTION:
- **Do not start the engine before charging refrigerant.**
- **If the engine is started with no refrigerant charge, replace the compressor.**
- **If the engine may have been started with no refrigerant charge, check for any diagnosis code (DTC) using Subaru Select Monitor. If the code B1644 (Refrigerant not sealed drive error) is output, replace the compressor.**
- **If the condenser has been replaced, add an appropriate amount of compressor oil to the compressor. <Ref. to AC-24, REPLACEMENT, Compressor Oil.>**
- **Replace the O-rings on pipes with new parts, and then apply compressor oil.**
- **Confirm that lower guide (A) of condenser fits into holes on radiator panel.**

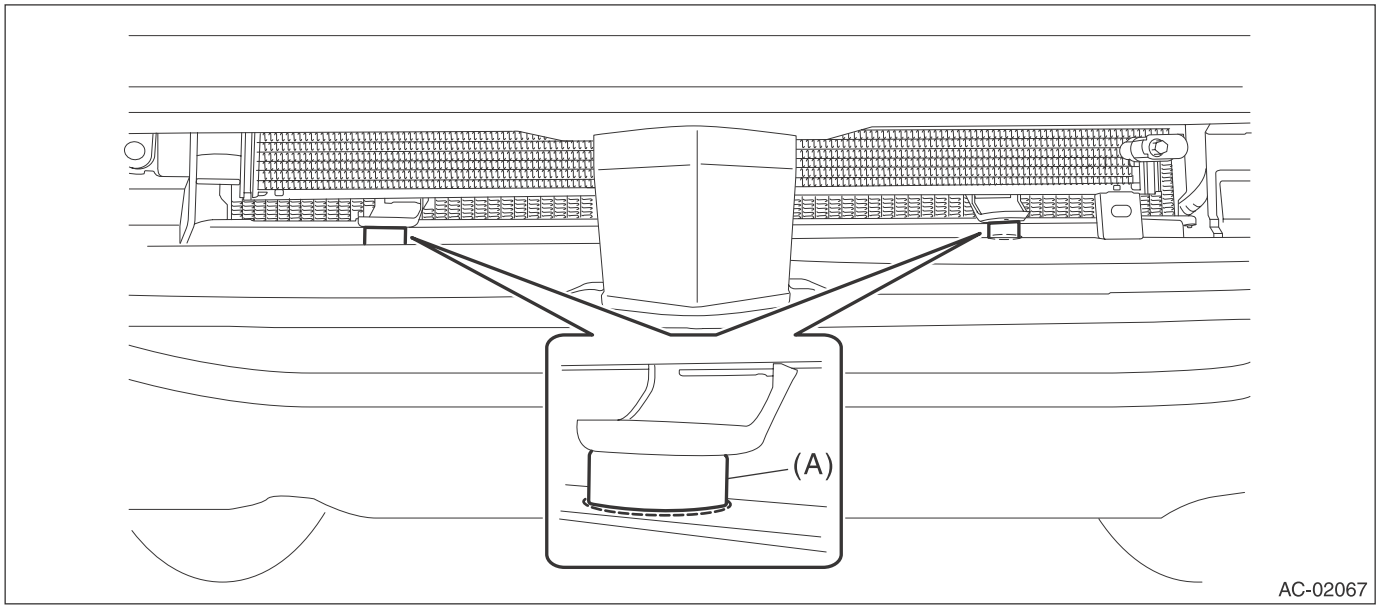

1) Install each part in the reverse order of removal.
2) Charge refrigerant. <Ref. to AC-19, PROCEDURE, Refrigerant Charging Procedure.>

Tightening torque:

- ***Air conditioning unit: <Ref. to AC-8, AIR CONDITIONING UNIT, COMPONENT, General Description.>***
- ***Radiator bracket: <Ref. to CO(H4DOTC)-4, RADIATOR AND RADIATOR FAN, COMPONENT, General Description.>***

C: INSPECTION

1) Check to see that the condenser fins are not clogged with debris or insects. Blow with compressed air or flush fins with water as needed.
2) If any oil leak is found from the condenser, replace the condenser.

17.Heater and Cooling Unit

A: REMOVAL

1) Disconnect the ground cable from battery.
2) Using the refrigerant recovery system, drain the refrigerant. <Ref. to AC-18, PROCEDURE, Refrigerant Recovery Procedure.>
3) Drain the coolant from the radiator.
- H4 non-turbo model: <Ref. to CO(H4SO)-14, DRAINING OF ENGINE COOLANT, REPLACEMENT, Engine Coolant.>
- H4 turbo model: <Ref. to CO(H4DOTC)-14, DRAINING OF ENGINE COOLANT, REPLACEMENT, Engine Coolant.>
- H6 model: <Ref. to CO(H6DO)-12, DRAINING OF ENGINE COOLANT, REPLACEMENT, Engine Coolant.>

4) Remove the connector and bolts, and remove the expansion valve and AC pipes from the evaporator.
5) Loosen the heater hose clamps and remove the hoses.

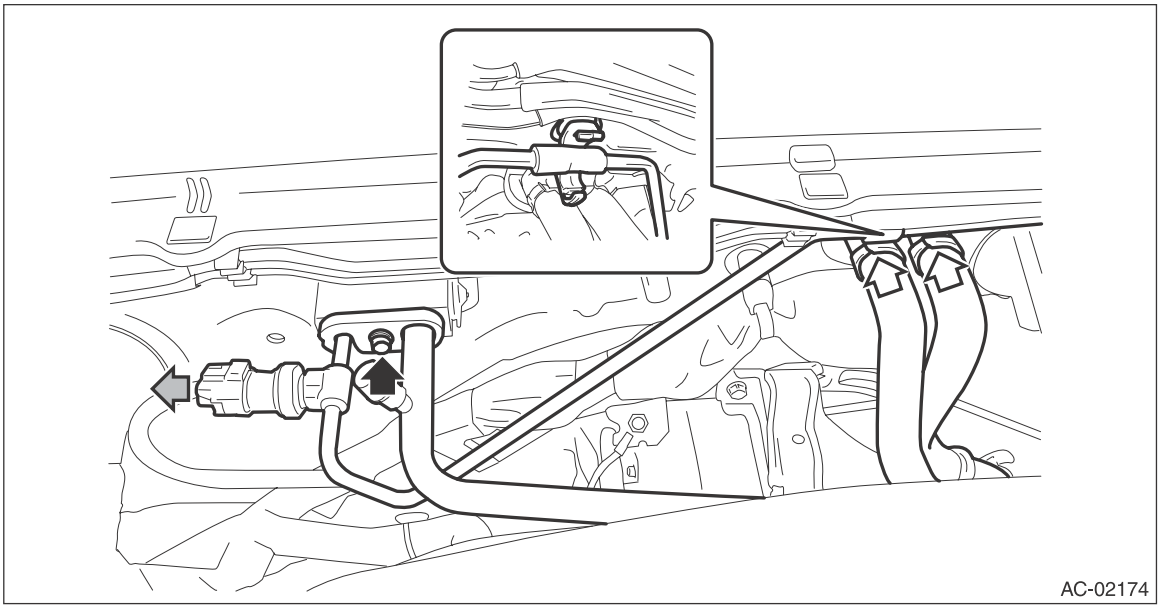

6) Remove the instrument panel assembly. <Ref. to EI-75, REMOVAL, Instrument Panel Assembly.>
7) Remove the heater and cooling unit.
   (1) Release the lock and remove the relay holder.
   (2) Remove the nuts, and remove the engine control module (ECM).

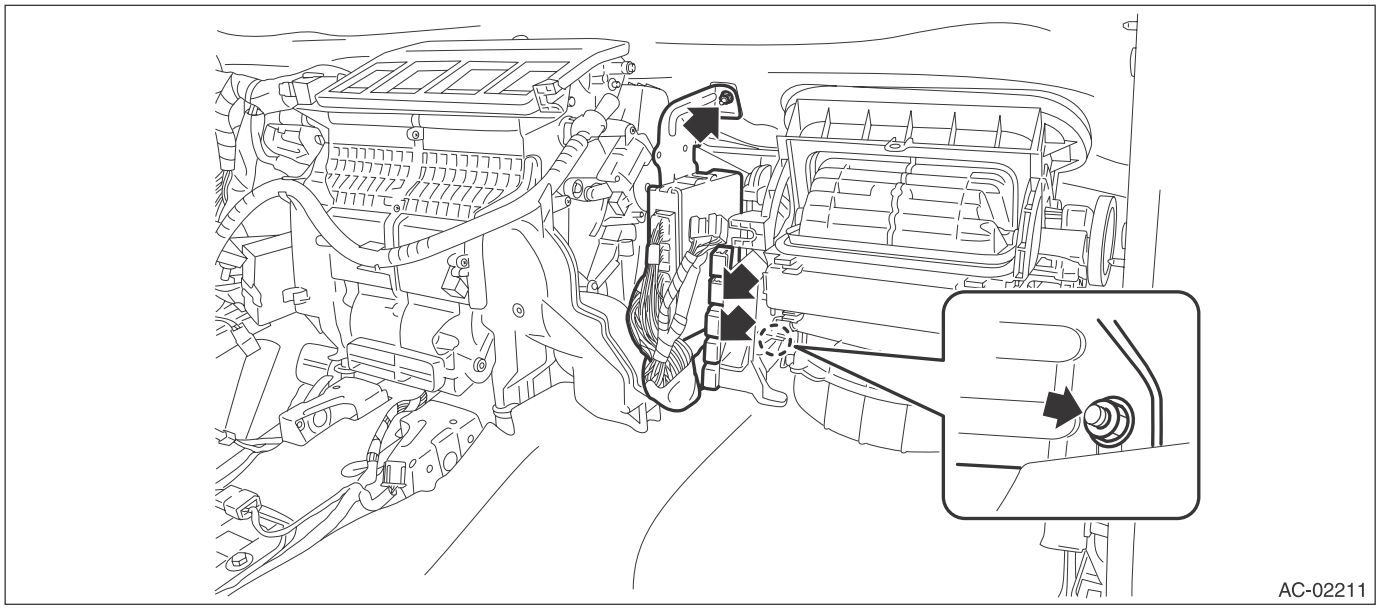

(3) Remove the bolts and remove the heater and cooling unit.

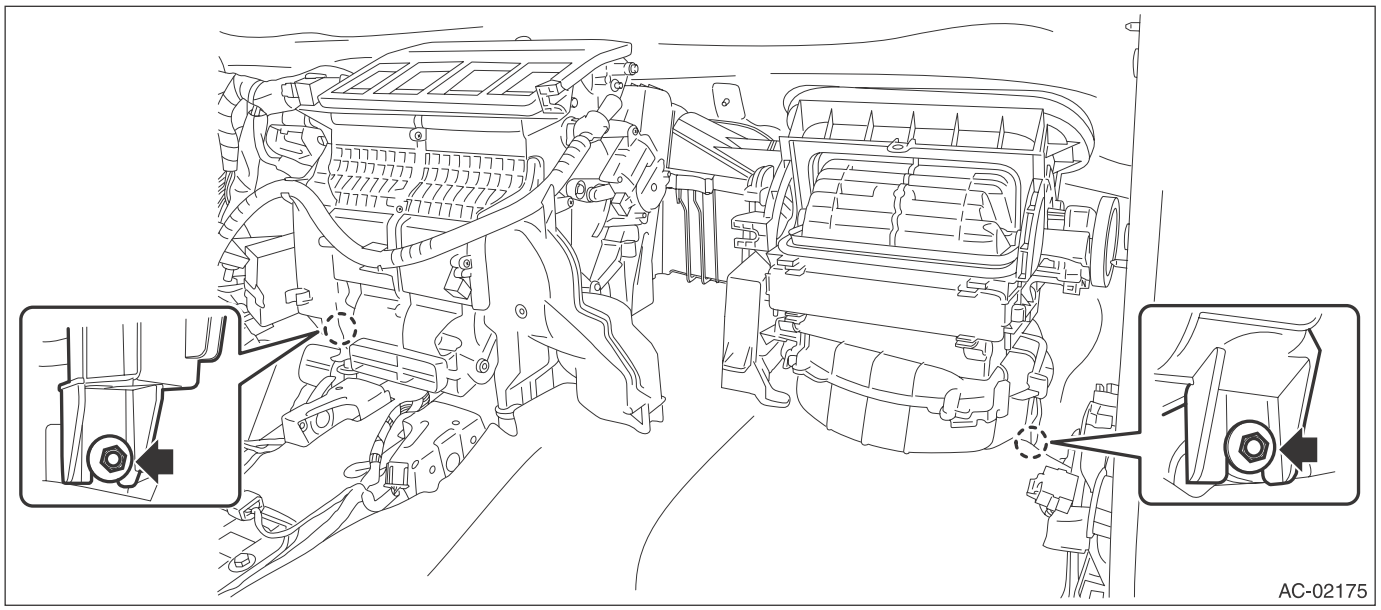

8) Remove the blower motor unit assembly.
(1) Release the claws and remove the bolts.

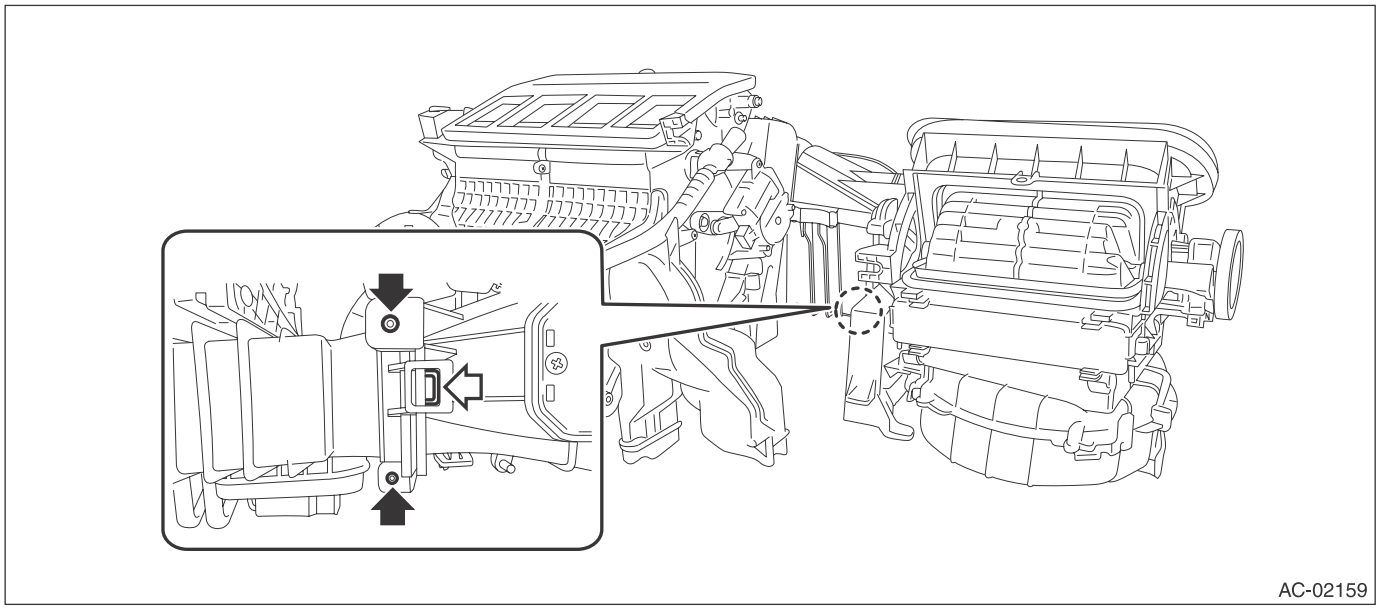

(2) Remove the blower motor unit assembly as shown in the figure.

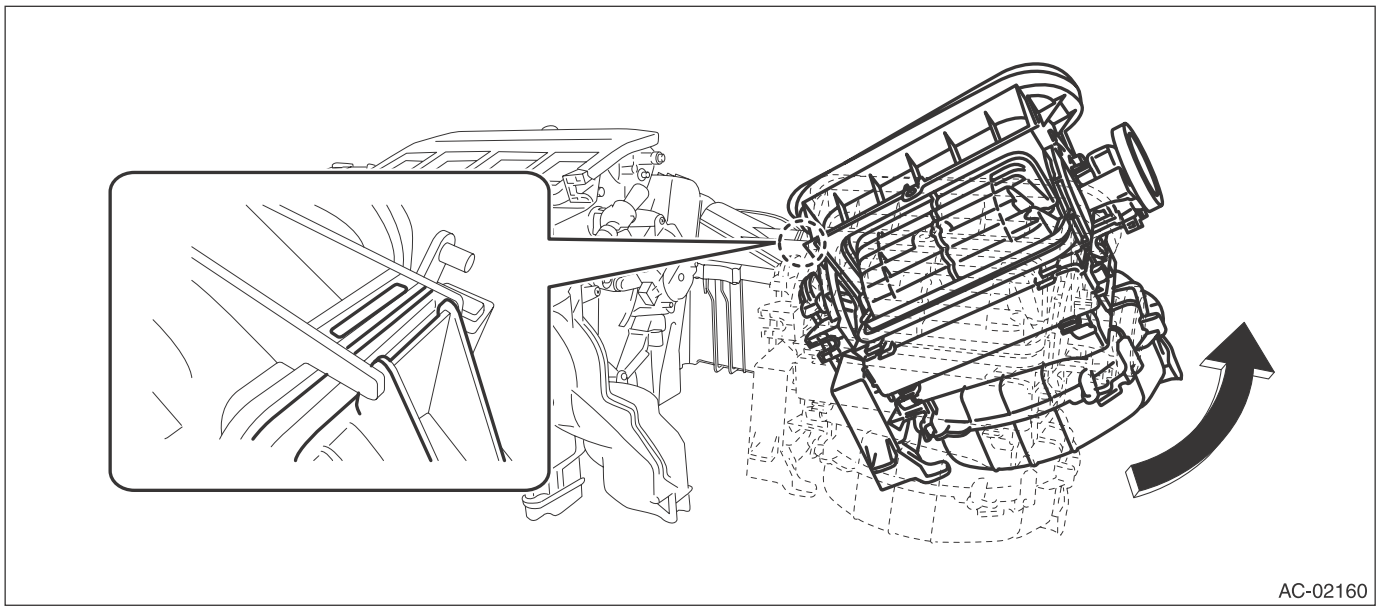

B: INSTALLATION

CAUTION:
- **Do not start the engine before charging refrigerant.**
- **If the engine is started with no refrigerant charge, replace the compressor.**
- **If the engine may have been started with no refrigerant charge, check for any diagnosis code (DTC) using Subaru Select Monitor. If the code B1644 (Refrigerant not sealed drive error) is output, replace the compressor.**

1) Install each part in the reverse order of removal.
2) Fill engine coolant.
- H4 non-turbo model: <Ref. to CO(H4SO)-14, FILLING OF ENGINE COOLANT, REPLACEMENT, Engine Coolant.>
- H4 turbo model: <Ref. to CO(H4DOTC)-14, FILLING OF ENGINE COOLANT, REPLACEMENT, Engine Coolant.>
- H6 model: <Ref. to CO(H6DO)-12, FILLING OF ENGINE COOLANT, REPLACEMENT, Engine Coolant.>

3) Charge refrigerant. <Ref. to AC-19, PROCEDURE, Refrigerant Charging Procedure.>

Tightening torque:

- ***Heater cooling unit: <Ref. to AC-4, HEATER COOLING UNIT, COMPONENT, General Description.>***
- ***Blower motor unit: <Ref. to AC-6, BLOWER MOTOR UNIT, COMPONENT, General Description.>***

18.Evaporator

A: REMOVAL

1) Disconnect the ground cable from battery.
2) Using the refrigerant recovery system, drain the refrigerant. <Ref. to AC-18, PROCEDURE, Refrigerant Recovery Procedure.>
3) Drain the coolant from the radiator.
• H4 non-turbo model: <Ref. to CO(H4SO)-14, DRAINING OF ENGINE COOLANT, REPLACEMENT, Engine Coolant.>
• H4 turbo model: <Ref. to CO(H4DOTC)-14, DRAINING OF ENGINE COOLANT, REPLACEMENT, Engine Coolant.>
• H6 model: <Ref. to CO(H6DO)-12, DRAINING OF ENGINE COOLANT, REPLACEMENT, Engine Coolant.>
4) Remove the connector and bolts, and remove the expansion valve and AC pipes from the evaporator.
5) Loosen the heater hose clamps and remove the hoses.

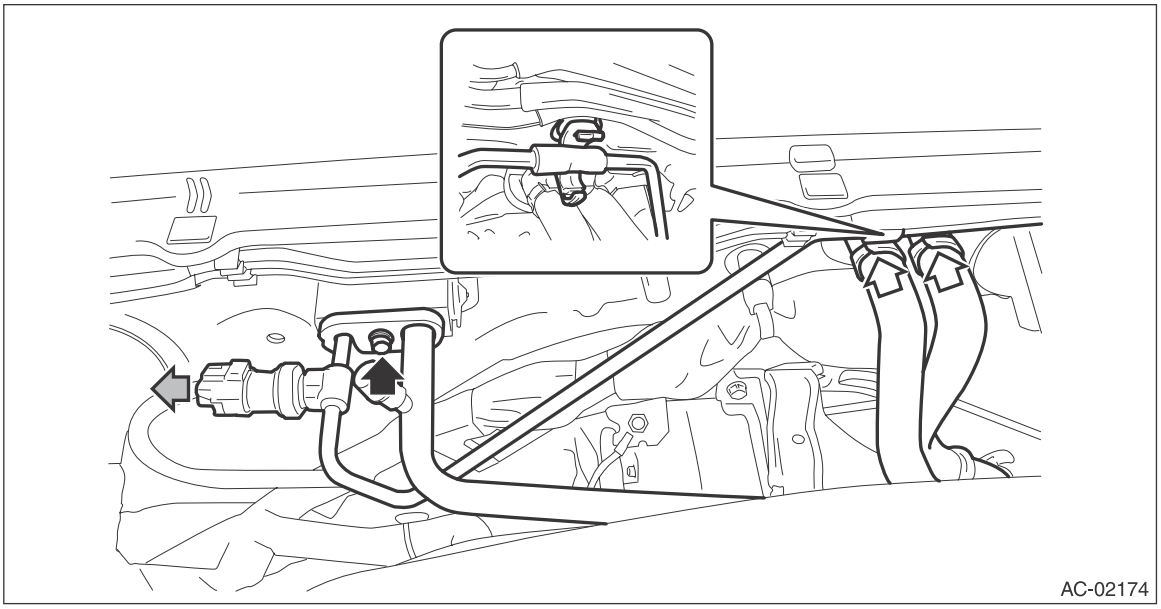

6) Remove the instrument panel assembly. <Ref. to EI-75, REMOVAL, Instrument Panel Assembly.>
7) Remove the heater and cooling unit.
(1) Release the lock and remove the relay holder.

(2) Remove the nuts, and remove the engine control module (ECM).

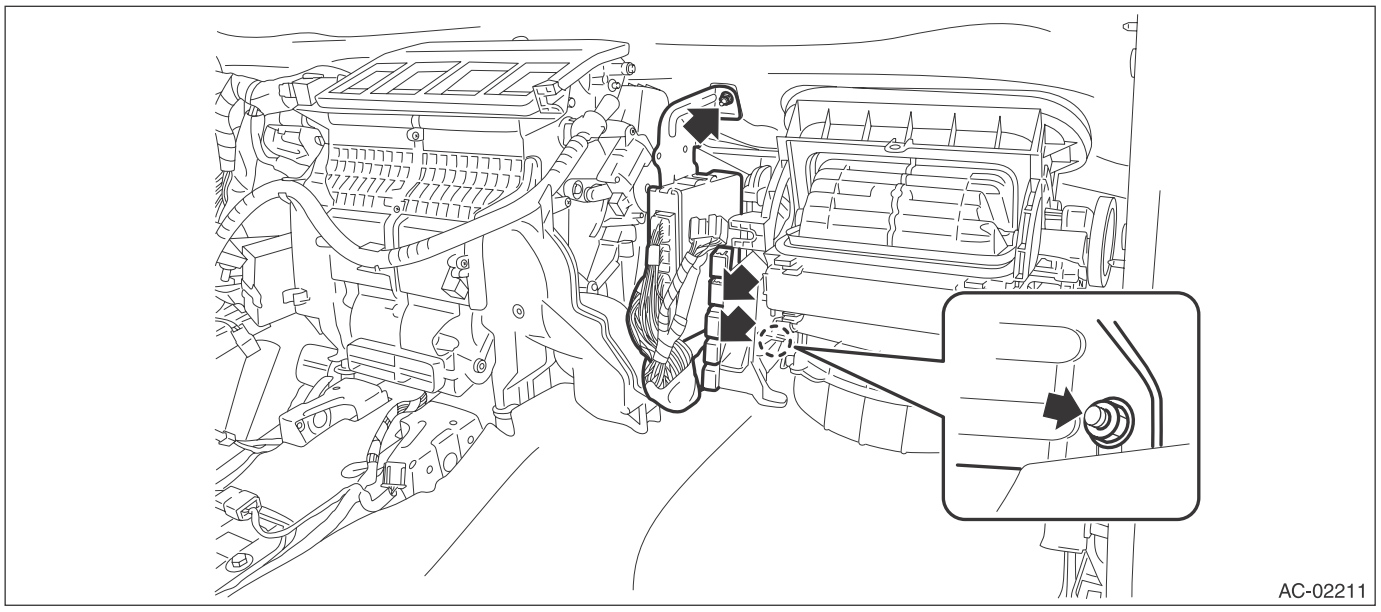

(3) Remove the bolts and remove the heater and cooling unit.

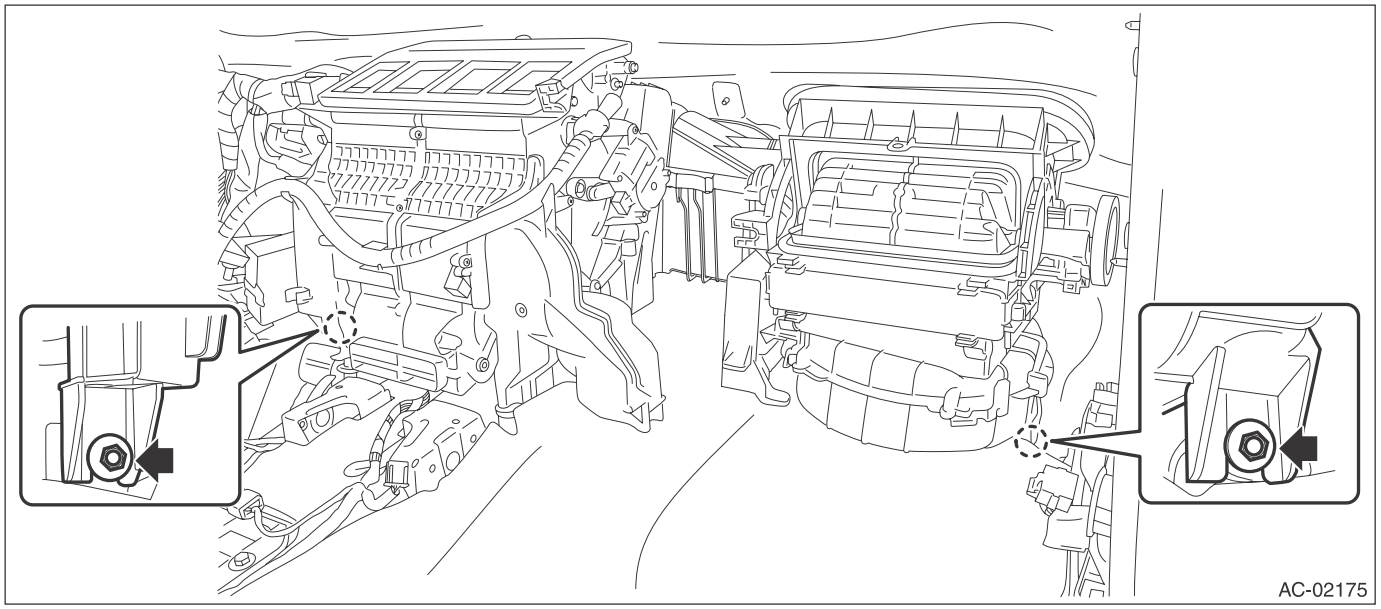

8) Remove the blower motor unit assembly.

(1) Release the claws and remove the bolts.

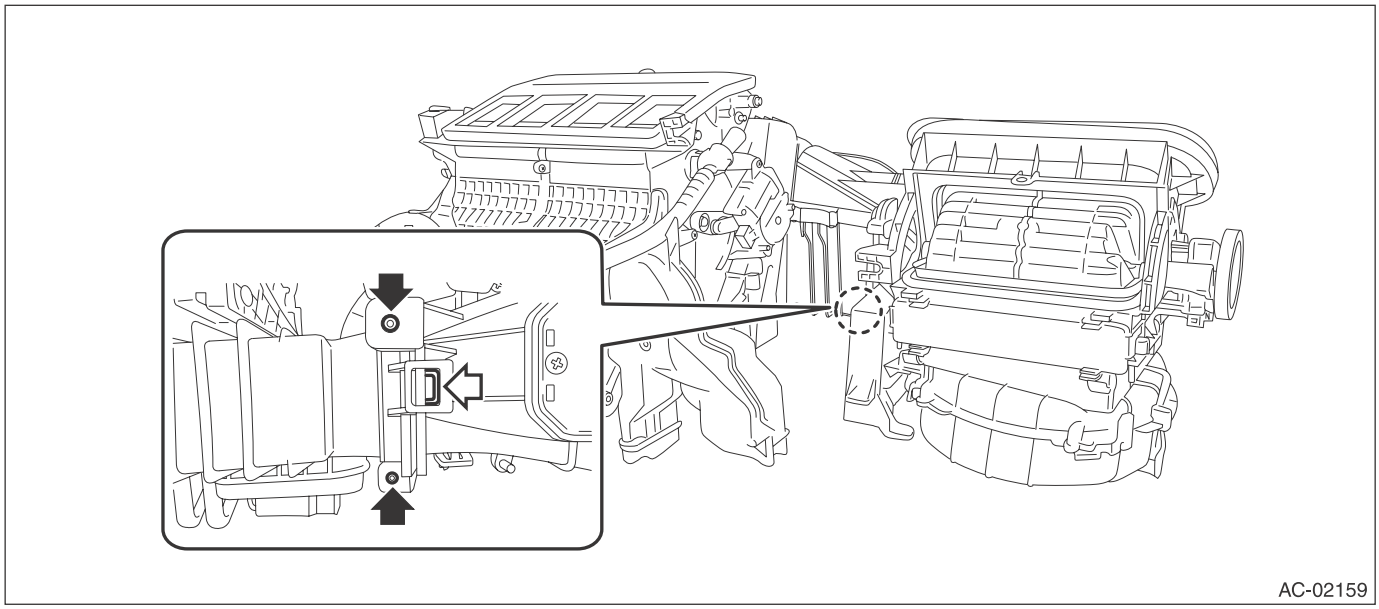

(2) Remove the blower motor unit assembly as shown in the figure.

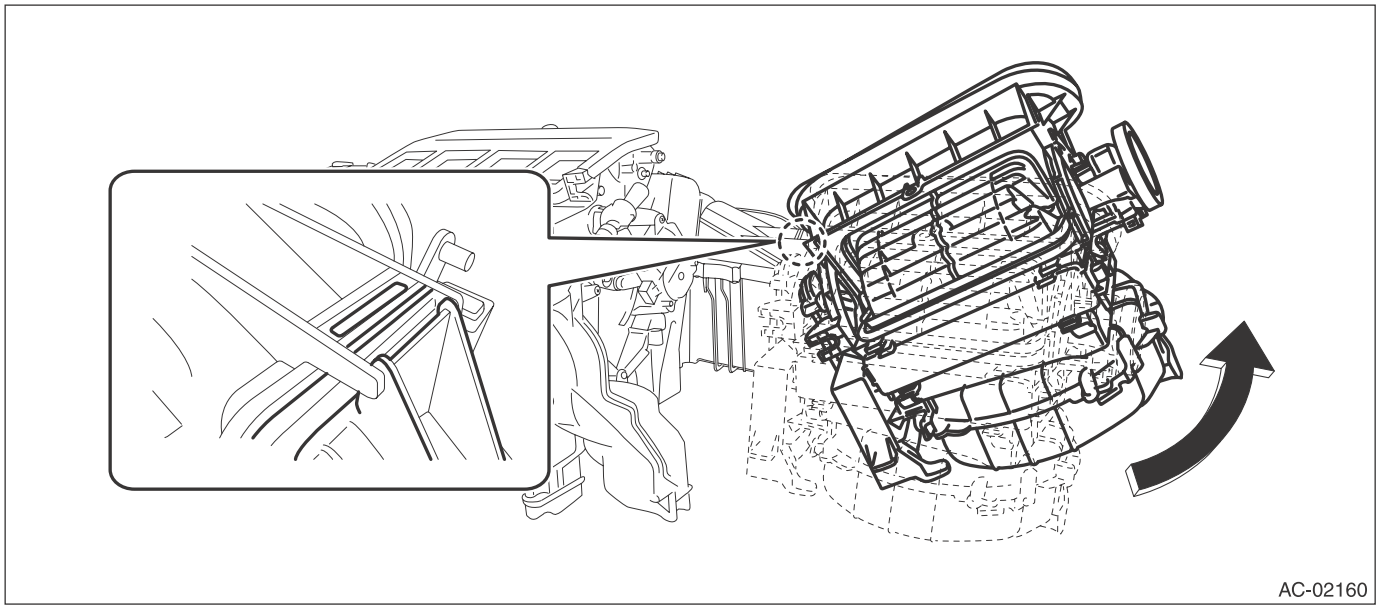

9) Disconnect the claws and then remove the aspirator hose.

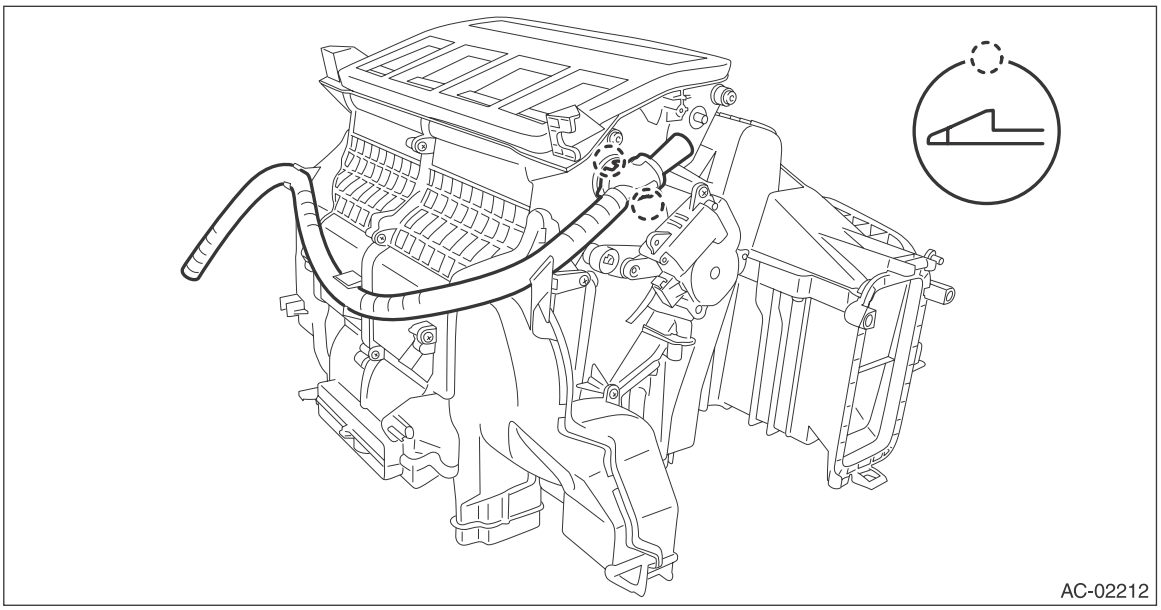

10) Remove the screws and remove the foot duct (RH).

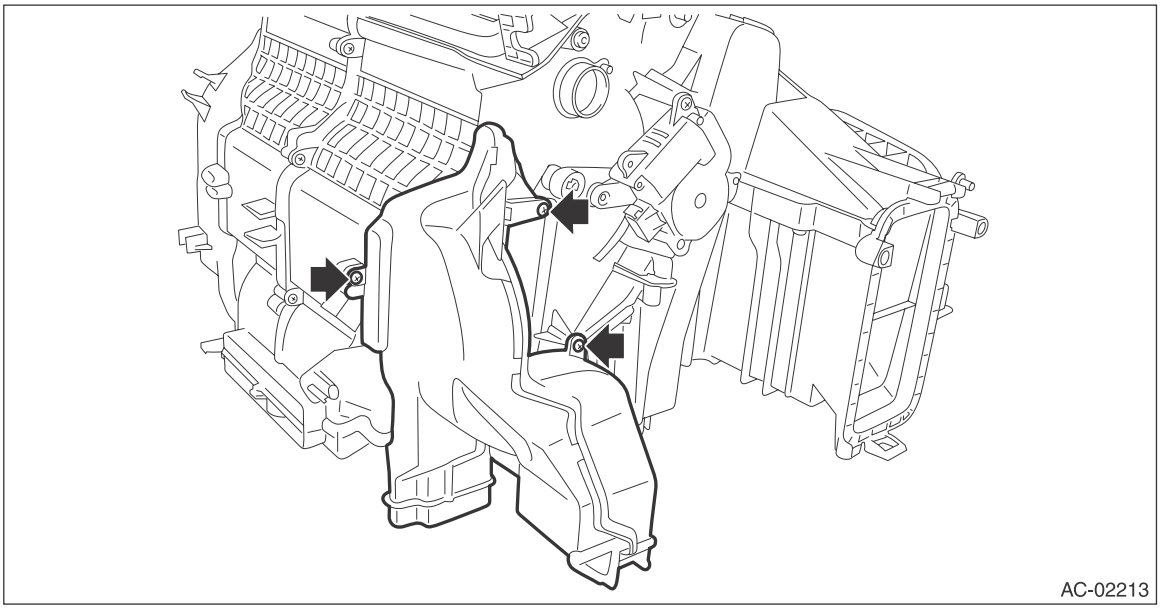

11) Remove the screws and remove the foot duct (LH).

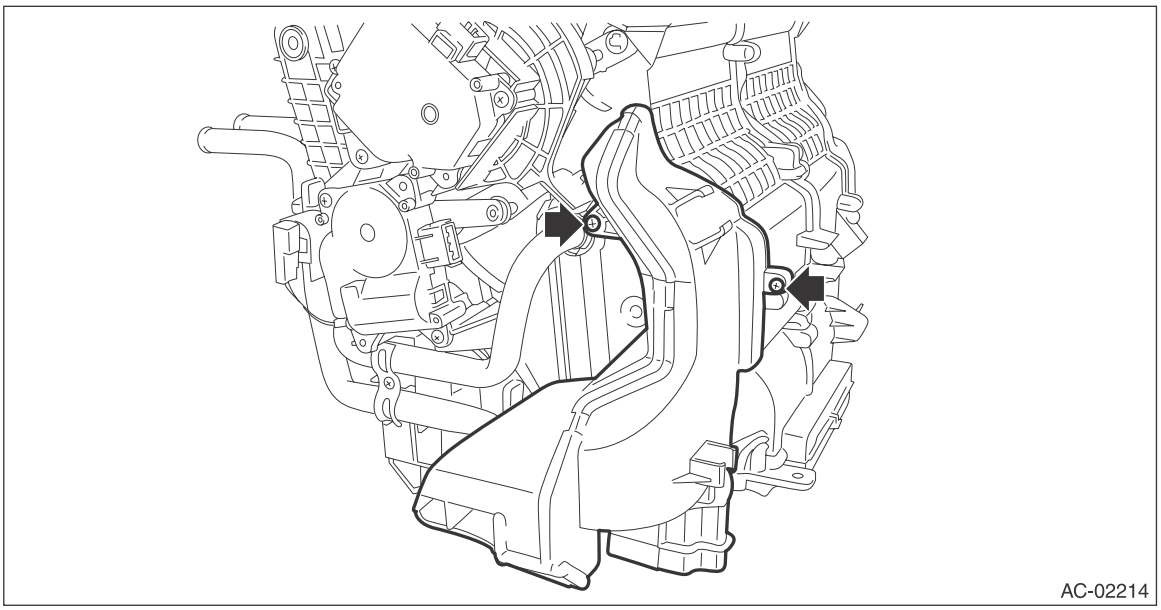

12) Pull out the heater core.
(1) Remove the screw and remove the heater pipe clamp.

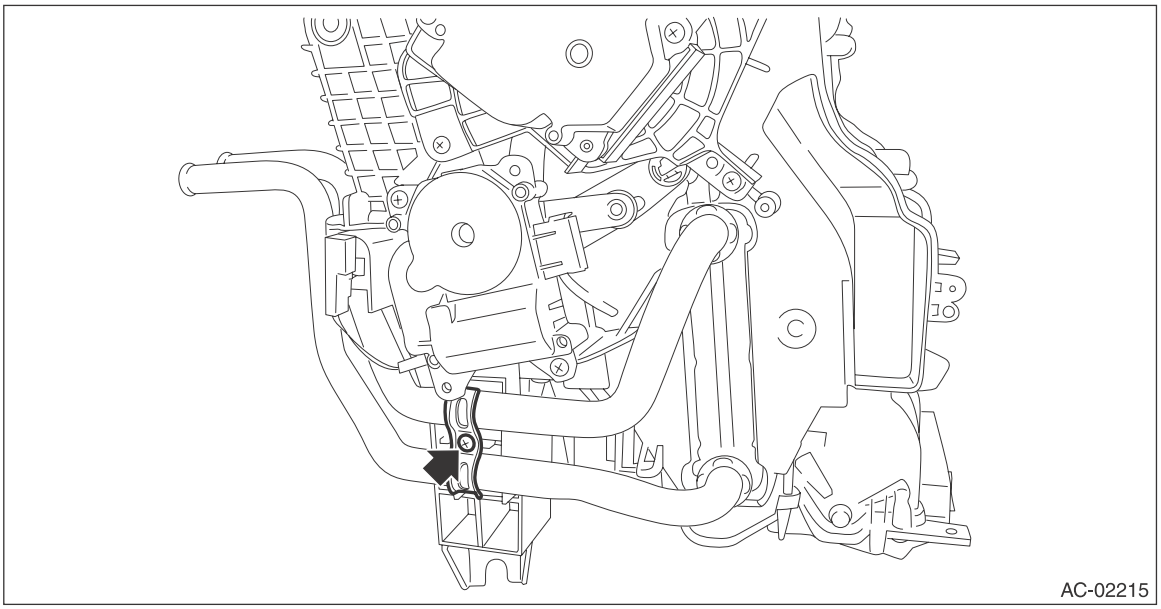

(2) Pull out the heater core from the heater and cooling unit assembly.

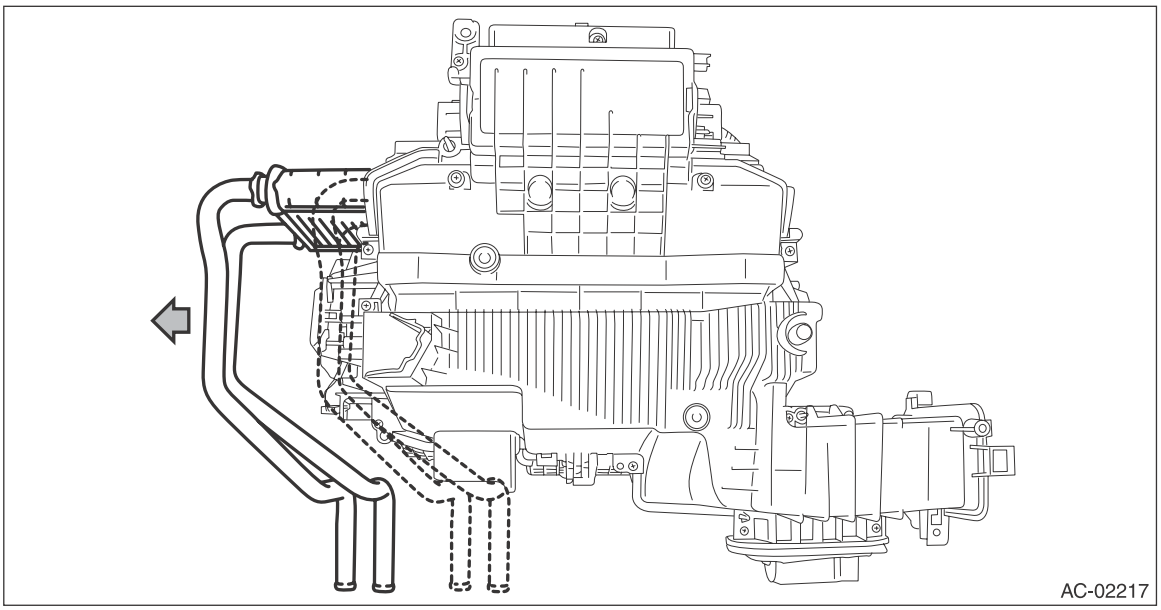

13) Remove the heater case lower.
(1) Remove the clip, and remove the evaporator connector.
(2) Remove the gasket.
(3) Remove the screw and lock, then remove the heater case lower.

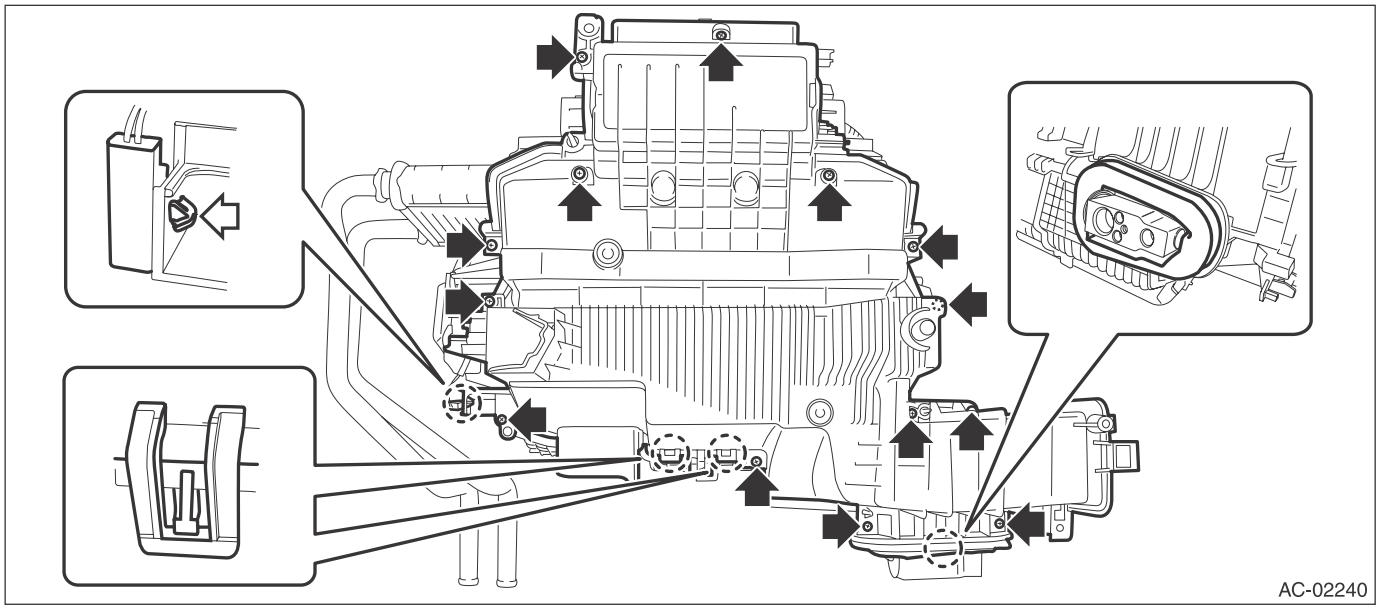

14) Remove the evaporator.

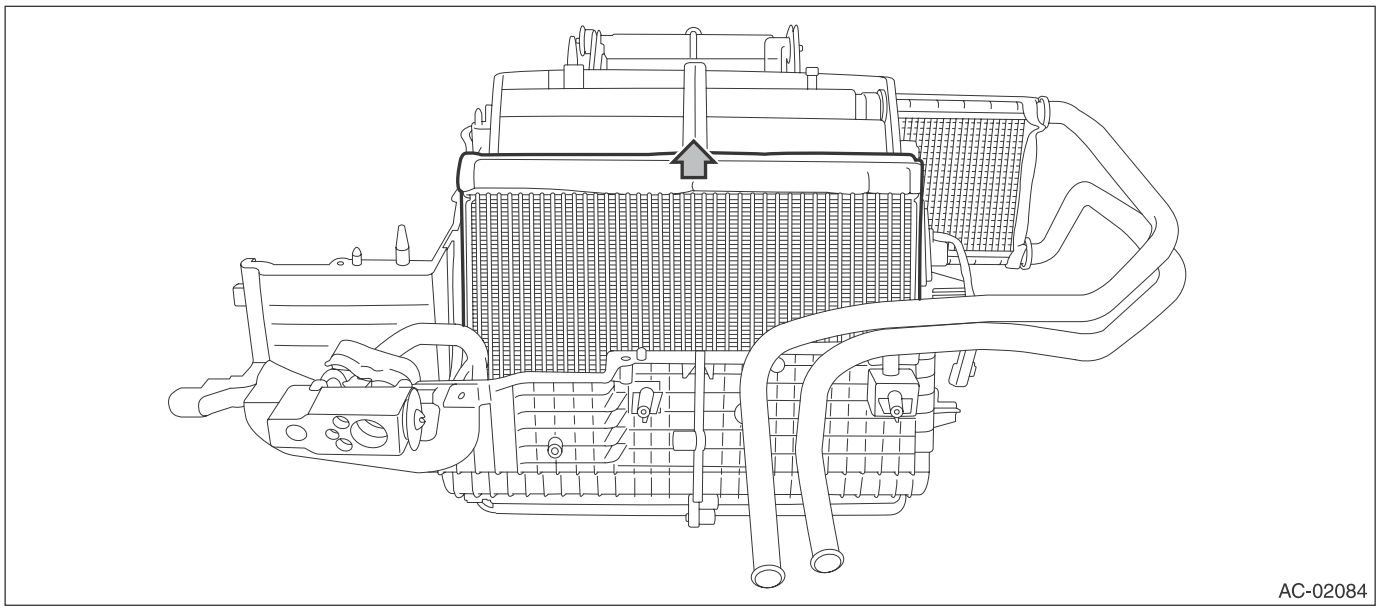

B: INSTALLATION

CAUTION:
- **Do not start the engine before charging refrigerant.**
- **If the engine is started with no refrigerant charge, replace the compressor.**
- **If the engine may have been started with no refrigerant charge, check for any diagnosis code (DTC) using Subaru Select Monitor. If the code B1644 (Refrigerant not sealed drive error) is output, replace the compressor.**
- **If the evaporator has been replaced, add an appropriate amount of compressor oil to the evaporator. <Ref. to AC-24, REPLACEMENT, Compressor Oil.>**
- **Make sure that the water stop gasket of the cover attachment area is securely attached.**
- **Replace the O-rings on pipes with new parts, and then apply compressor oil.**
- **Install the evaporator sensor at the position shown in the figure below.**

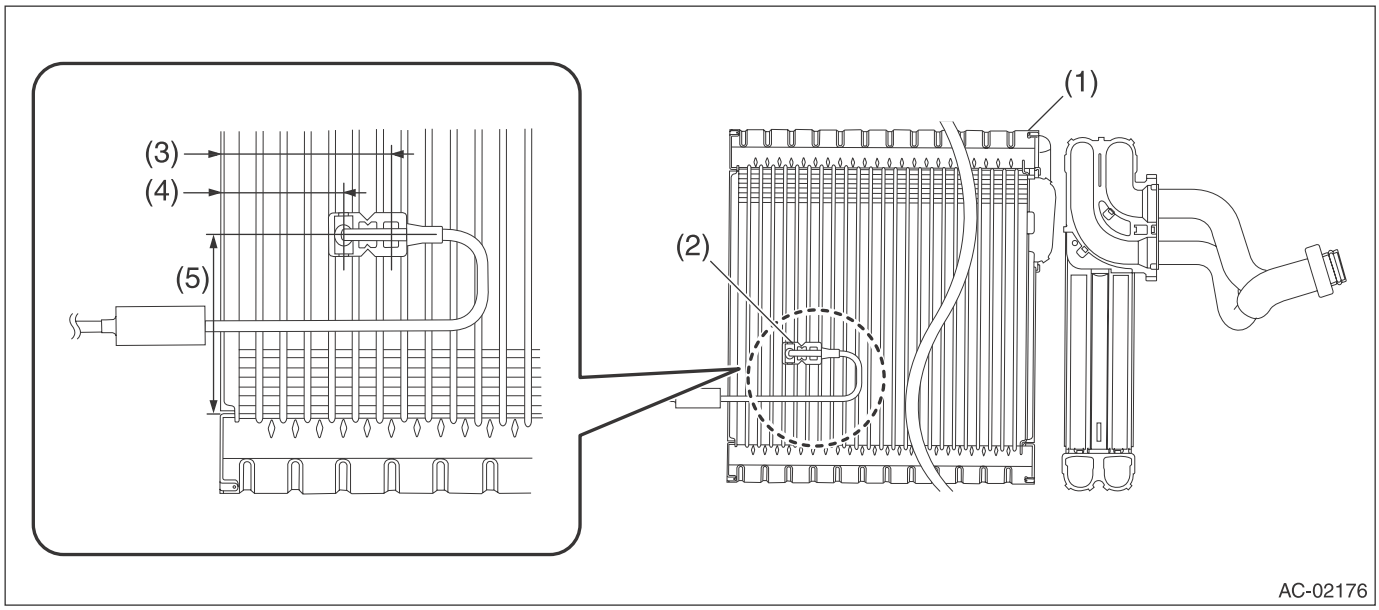

(1)	Evaporator	(3)	47.7 mm (1.88 in)	(5)	50 mm (1.97 in)
(2)	Evaporator sensor	(4)	34.3 mm (1.35 in)		

1) Install each part in the reverse order of removal.

2) Fill engine coolant.
• H4 non-turbo model: <Ref. to CO(H4SO)-14, FILLING OF ENGINE COOLANT, REPLACEMENT, Engine Coolant.>
• H4 turbo model: <Ref. to CO(H4DOTC)-14, FILLING OF ENGINE COOLANT, REPLACEMENT, Engine Coolant.>
• H6 model: <Ref. to CO(H6DO)-12, FILLING OF ENGINE COOLANT, REPLACEMENT, Engine Coolant.>
3) Charge refrigerant. <Ref. to AC-19, PROCEDURE, Refrigerant Charging Procedure.>

Tightening torque:

- ***Heater cooling unit: <Ref. to AC-4, HEATER COOLING UNIT, COMPONENT, General Description.>***
- ***Blower motor unit: <Ref. to AC-6, BLOWER MOTOR UNIT, COMPONENT, General Description.>***

C: INSPECTION

1) Check the evaporator fin for dust. Blow with compressed air or flush fins with water as needed.
2) If any oil leak is found from the evaporator, replace the evaporator.

19.Hose and Pipe

A: REMOVAL

CAUTION:
- **When disconnecting hoses, do not apply an excessive force to them.**
- **Seal the disconnected hose with a plug or vinyl tape to prevent foreign matter from entering.**

1) Disconnect the ground cable from battery.
2) Using the refrigerant recovery system, drain the refrigerant. <Ref. to AC-18, PROCEDURE, Refrigerant Recovery Procedure.>
3) Remove the bolts and screws and detach the hoses and pipes.

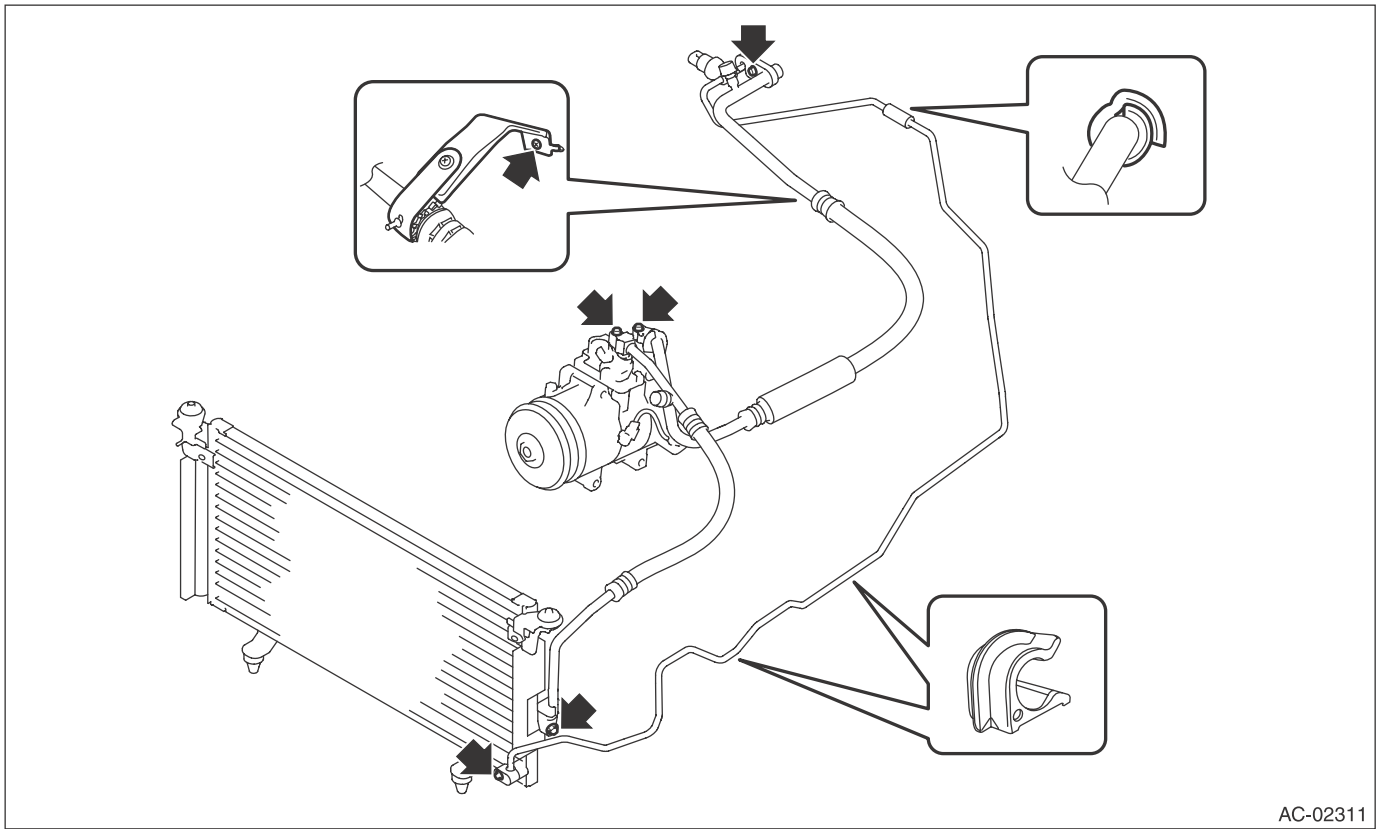

B: INSTALLATION

CAUTION:
- **Do not start the engine before charging refrigerant.**
- **If the engine is started with no refrigerant charge, replace the compressor.**
- **If the engine may have been started with no refrigerant charge, check for any diagnosis code (DTC) using Subaru Select Monitor. If the code B1644 (Refrigerant not sealed drive error) is output, replace the compressor.**
- **Replace the O-rings with new parts, and then apply compressor oil.**
- **When connecting hoses, do not apply an excessive force to them. After installing, check that no torsion or excessive tension applied to the hoses.**

1) Install each part in the reverse order of removal.
2) Charge refrigerant. <Ref. to AC-19, PROCEDURE, Refrigerant Charging Procedure.>

Tightening torque:
Refer to "COMPONENT" of "General Description". <Ref. to AC-8, AIR CONDITIONING UNIT, COMPONENT, General Description.>

C: INSPECTION

1) Check the hoses for cracks, damage and expansion. Replace the hose if faulty.
2) Check the pipes for crack or damage. Replace the pipe if faulty.

20.Pressure Sensor

A: INSPECTION

1) Perform a diagnosis code (DTC) check by connecting the Subaru Select Monitor.
2) If any diagnosis code (DTC) is displayed, consult the List of Diagnostic Trouble Code (DTC) in HVAC SYSTEM (AUTO A/C) (DIAGNOSTICS). <Ref. to AC(diag)-31, LIST, List of Diagnostic Trouble Code (DTC).>

21.Ambient Sensor (Auto A/C Model)

A: REMOVAL

1) Disconnect the ground cable from battery.
2) Remove the ambient sensor.
   (1) Disconnect the connector.
   (2) Remove the ambient sensor from the radiator lower panel.

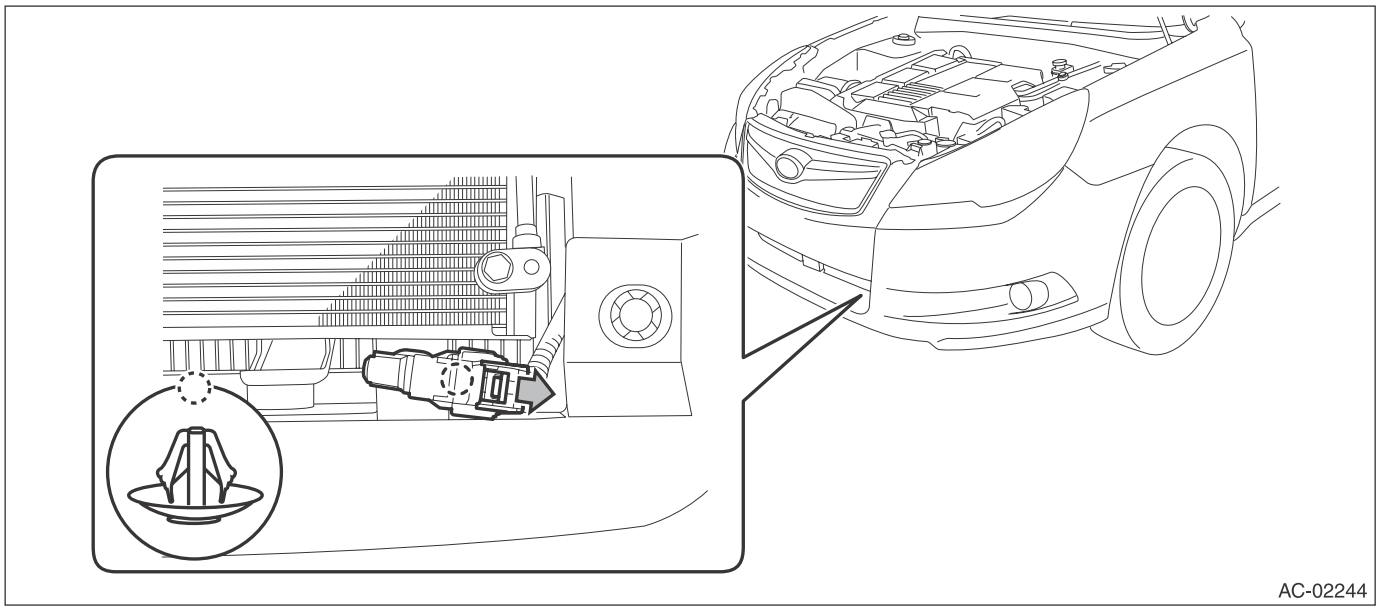

B: INSTALLATION

Install each part in the reverse order of removal.

C: INSPECTION

1) Perform a diagnosis code (DTC) check by connecting the Subaru Select Monitor.
2) If any diagnosis code (DTC) is displayed, consult the List of Diagnostic Trouble Code (DTC) in HVAC SYSTEM (AUTO A/C) (DIAGNOSTICS). <Ref. to AC(diag)-31, LIST, List of Diagnostic Trouble Code (DTC).>

22.Sunload Sensor (Auto A/C Model)

A: REMOVAL

NOTE:
Sunload sensor is integrated with the light control sensor.
1) Disconnect the ground cable from battery.
2) Remove the sunload sensor.

CAUTION:
Be careful not to damage the sensors and interior trims when removing.

(1) Release the claws and clips, then detach the side speaker cover (RH).

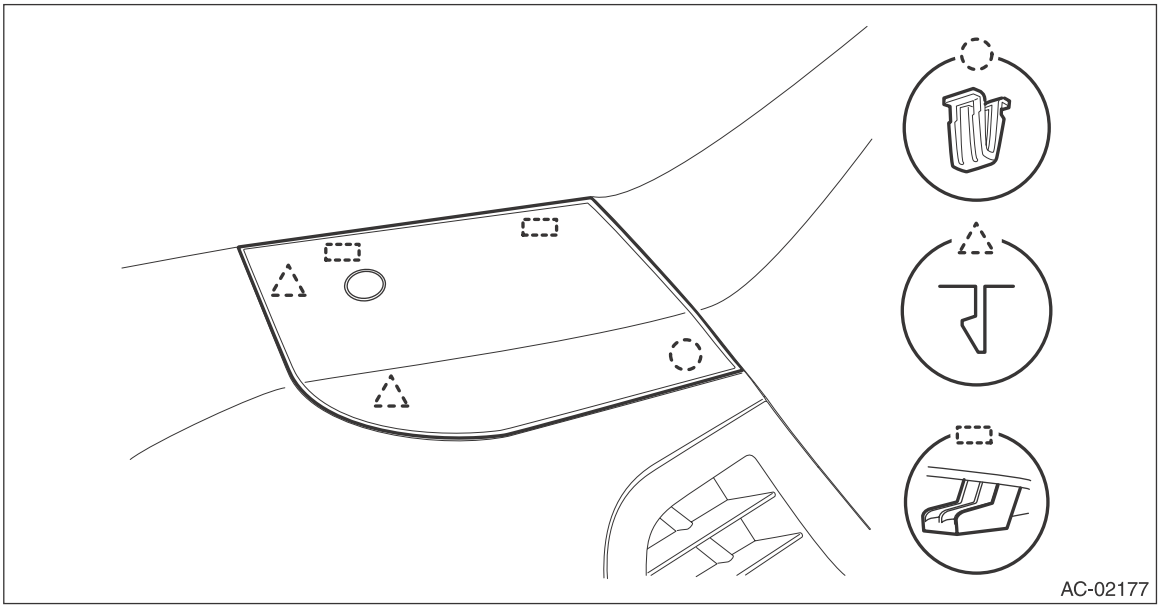

(2) Push out the sunload sensor by pressing the left and right claws.
(3) Disconnect the connector and remove the sunload sensor.

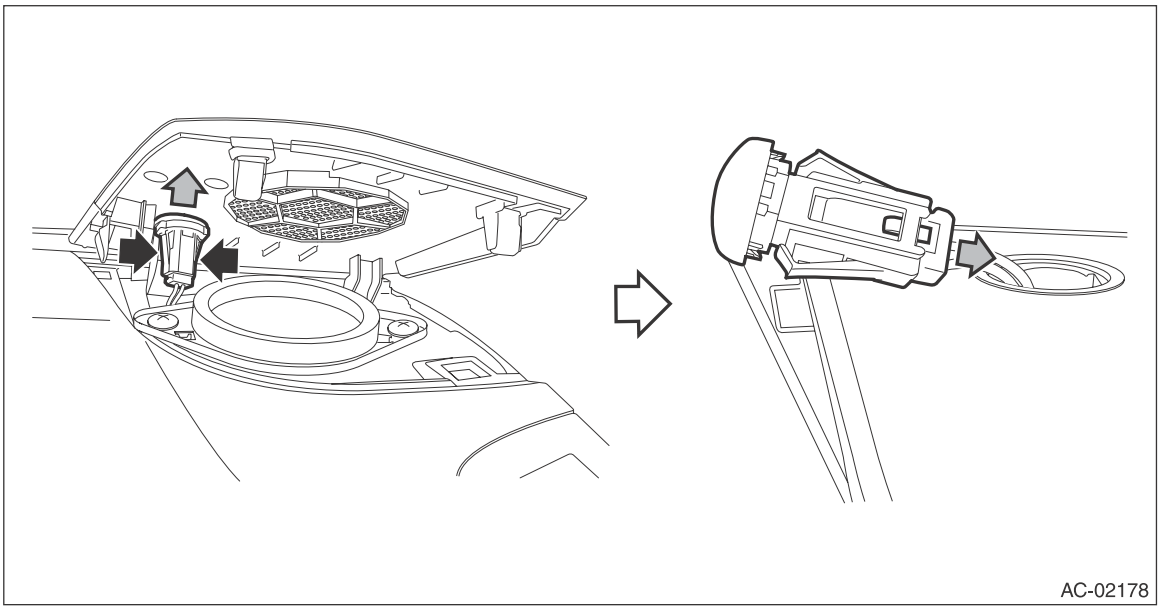

B: INSTALLATION

Install each part in the reverse order of removal.

C: INSPECTION

1) Perform a diagnosis code (DTC) check by connecting the Subaru Select Monitor.
2) If any diagnosis code (DTC) is displayed, consult the List of Diagnostic Trouble Code (DTC) in HVAC SYSTEM (AUTO A/C) (DIAGNOSTICS). <Ref. to AC(diag)-31, LIST, List of Diagnostic Trouble Code (DTC).>

23.In-Vehicle Sensor (Auto A/C Model)

A: REMOVAL

CAUTION:
Be careful not to damage the sensors and interior trims when removing.

1) Disconnect the ground cable from battery.
2) Remove the clips, and remove the instrument panel side cover LH.

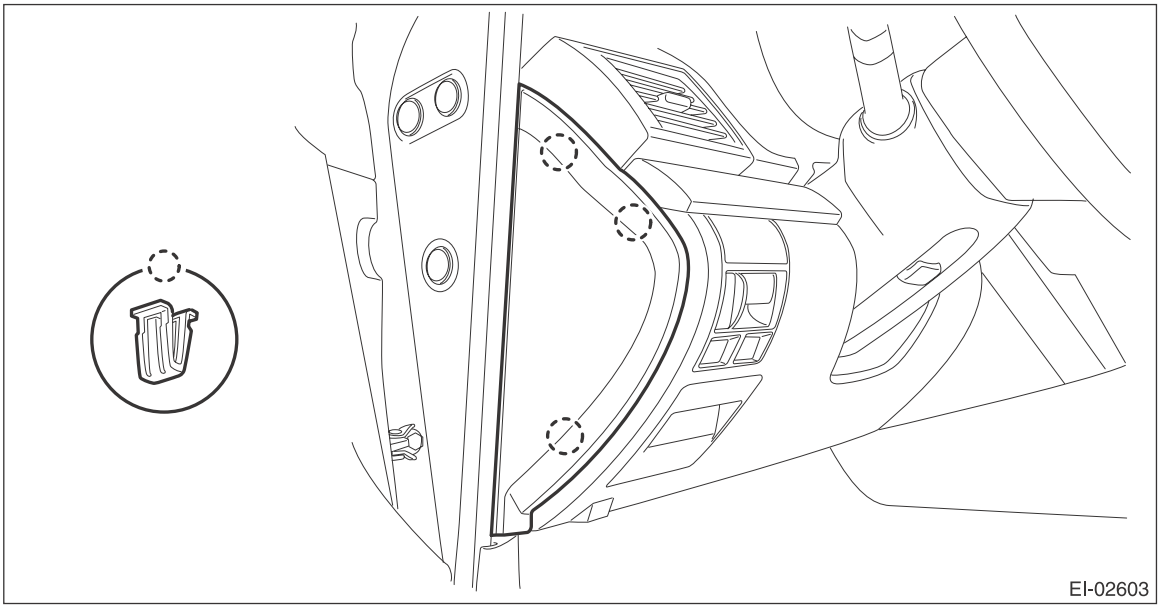

3) Remove the instrument panel lower cover.
   (1) Remove the clip.
   (2) Remove the data link connector, and remove the instrument panel lower cover under.

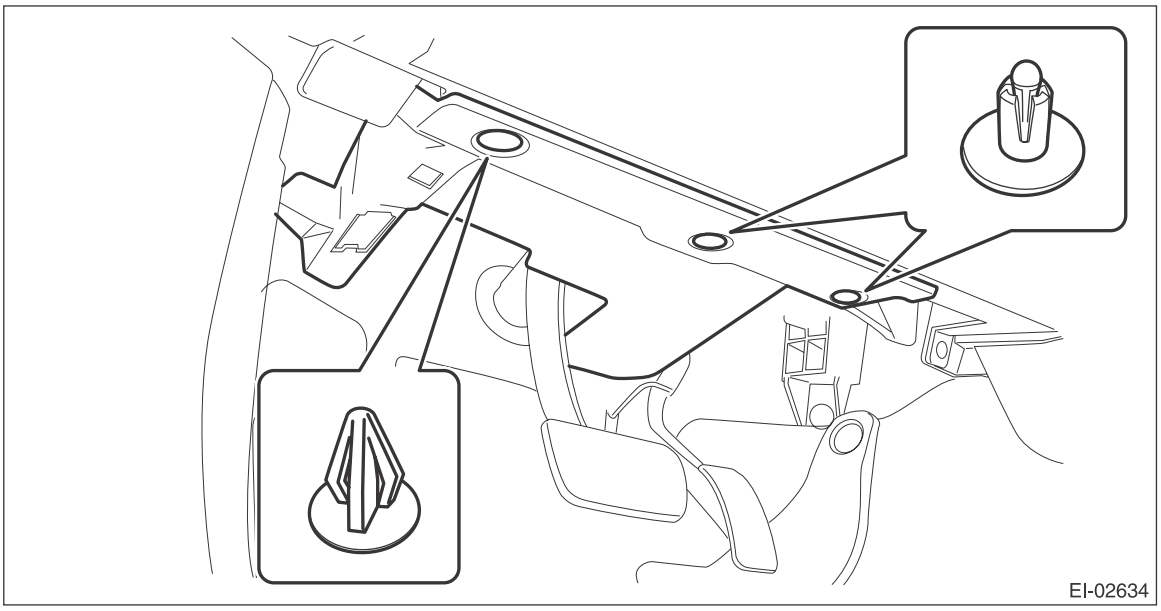

(3) Remove the screws and clips and release the claws, and remove the instrument panel lower cover while disconnecting the harness connectors.

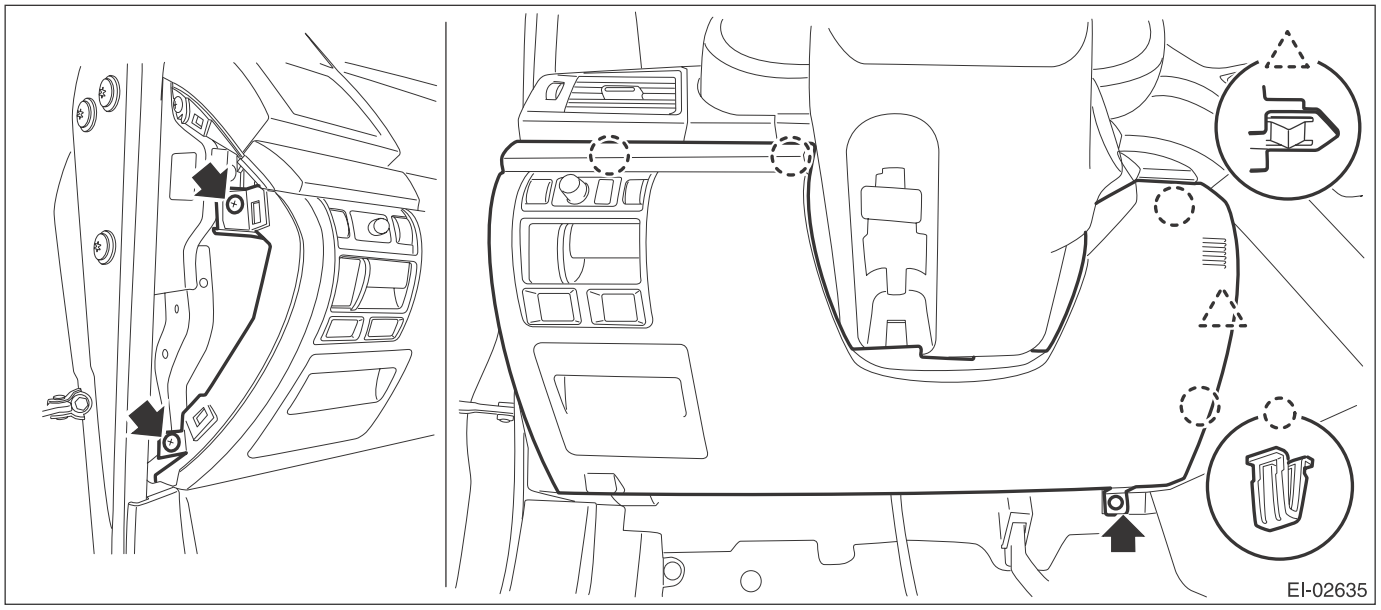

4) Remove the screw and remove the in-vehicle sensor from the instrument lower cover.

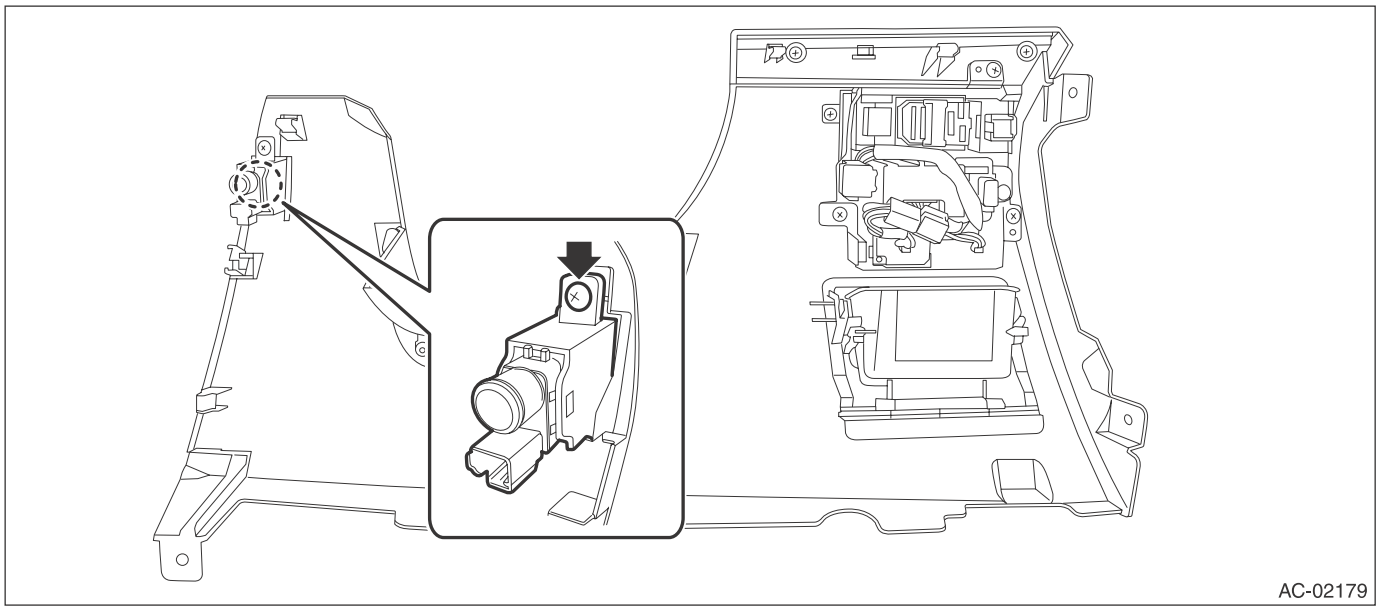

B: INSTALLATION

Install each part in the reverse order of removal.

C: INSPECTION

1) Perform a diagnosis code (DTC) check by connecting the Subaru Select Monitor.
2) If any diagnosis code (DTC) is displayed, consult the List of Diagnostic Trouble Code (DTC) in HVAC SYSTEM (AUTO A/C) (DIAGNOSTICS). <Ref. to AC(diag)-31, LIST, List of Diagnostic Trouble Code (DTC).>

24.Air Vent Grille

A: REMOVAL

1. CENTER GRILLE ASSEMBLY

1) Remove the center panel assembly.

CAUTION:
Do not put your finger on the fin of the air vent grille. Doing so may damage the fin.

(1) Attach the protective tape (a) to the meter visor.

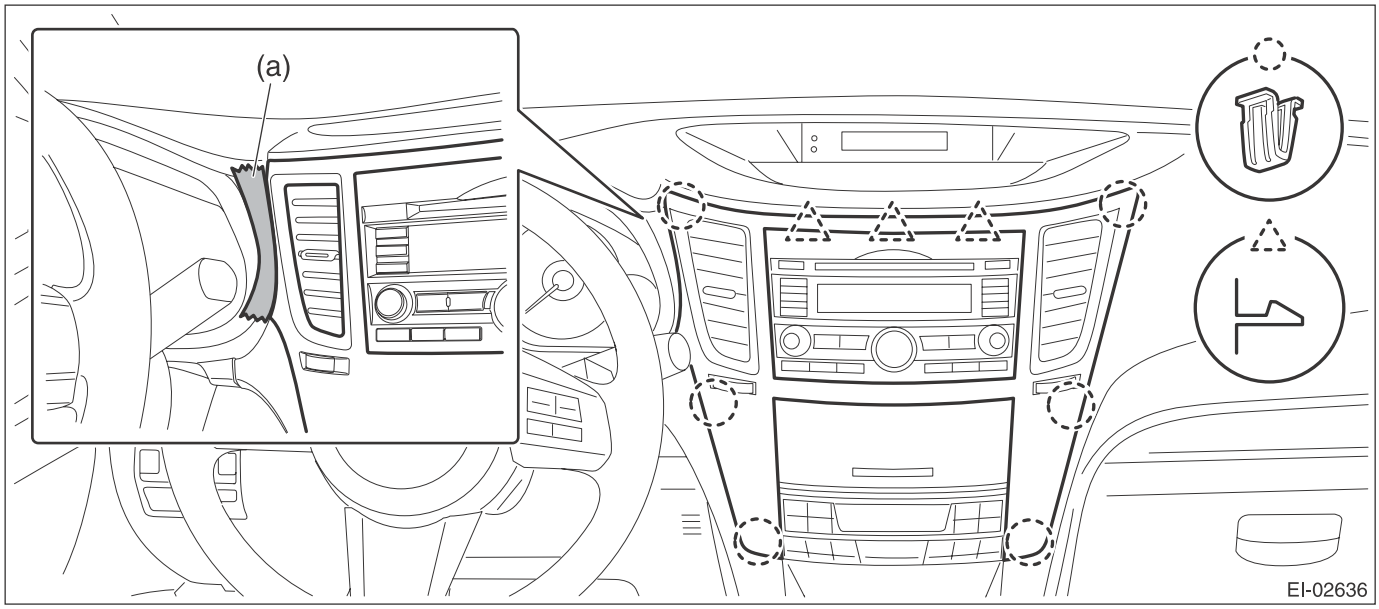

(2) Insert a finger into the air vent grille and release the left and right clips at the top of the center panel. (A), (B)

(3) Insert a finger into the air vent grille and release the left and right clips at the center of the center panel. (C), (D)

(4) Release the clips at the bottom of the center panel and remove the center panel assembly.

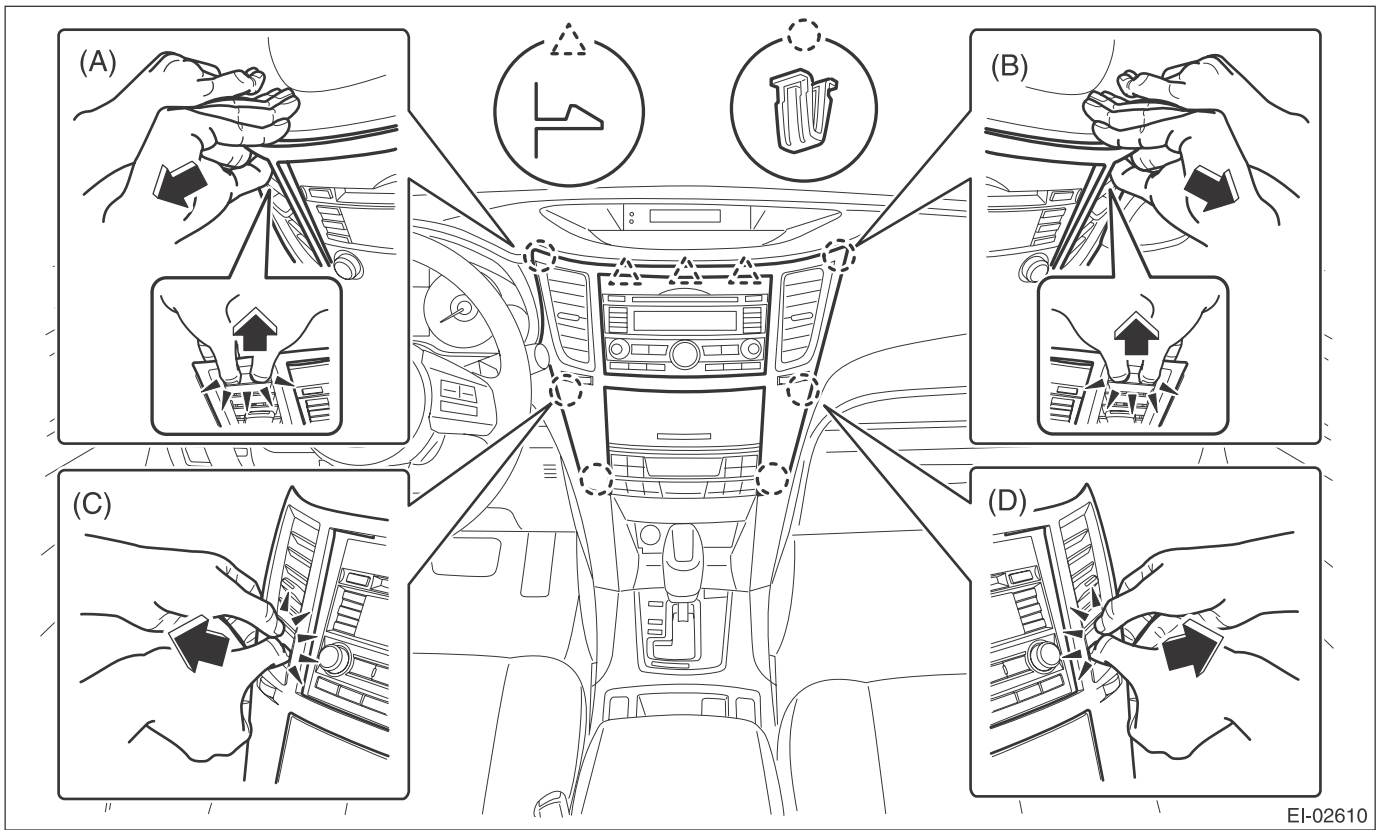

2) Release the claws, and then remove the center grille assembly.

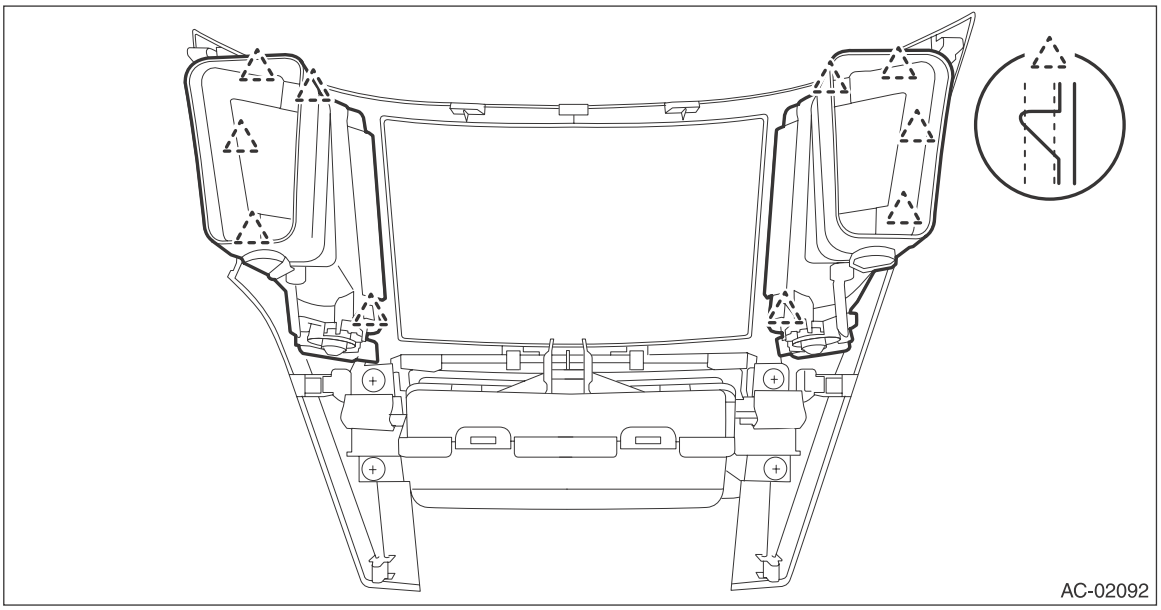

2. SIDE GRILLE ASSEMBLY RH

1) Remove the instrument panel lower cover. <Ref. to EI-63, REMOVAL, Instrument Panel Lower Cover.>
2) Remove the side vent grille assembly RH.
   (1) Remove the screws.
   (2) Release the claws and clips, then detach the side vent grille assembly RH.

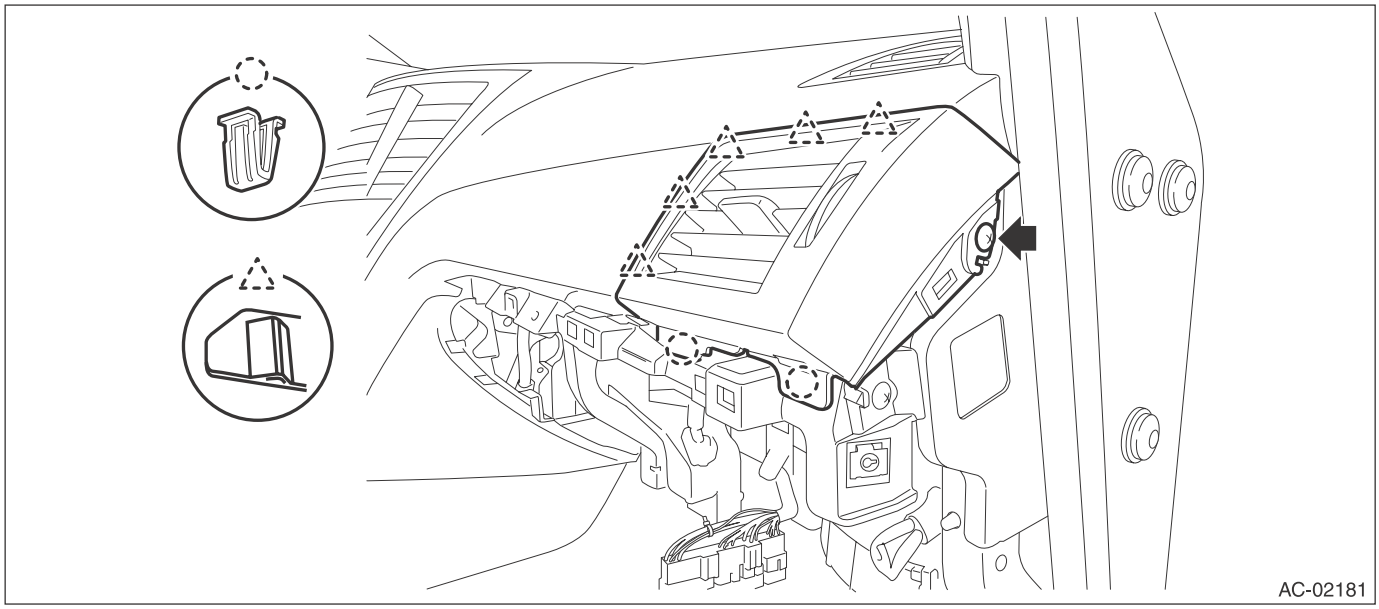

   (3) Release the claws, and then remove the side grille assembly RH.

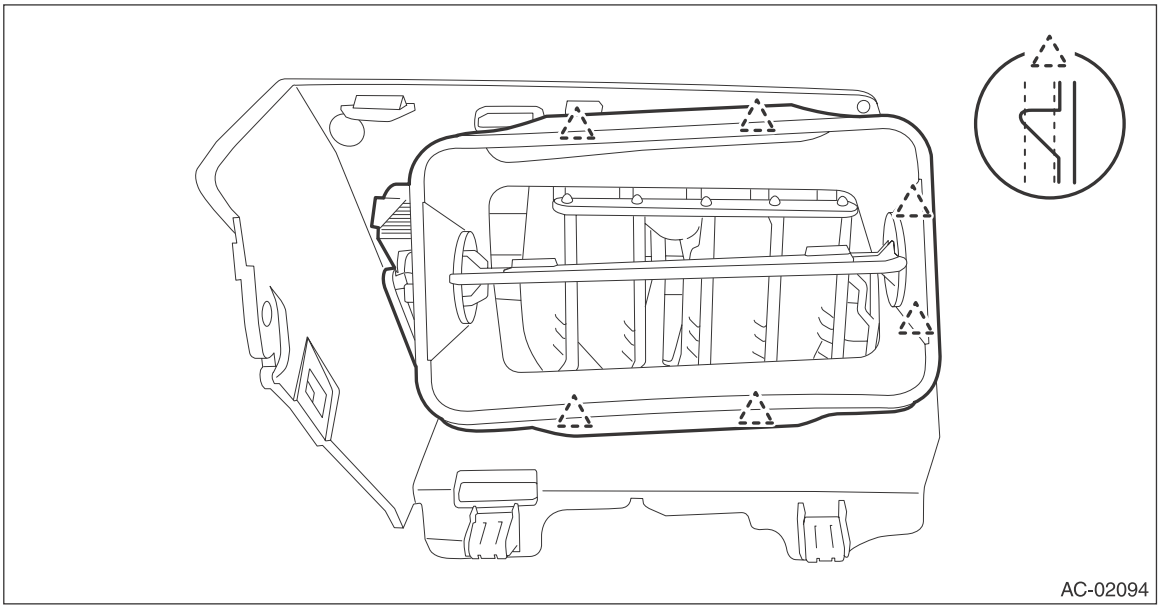

3. SIDE GRILLE ASSEMBLY LH

1) Remove the glove box. <Ref. to EI-65, REMOVAL, Glove Box.>
2) Remove the side vent grille assembly LH.
   (1) Remove the screws.
   (2) Release the claws and clips, then detach the side vent grille assembly LH.

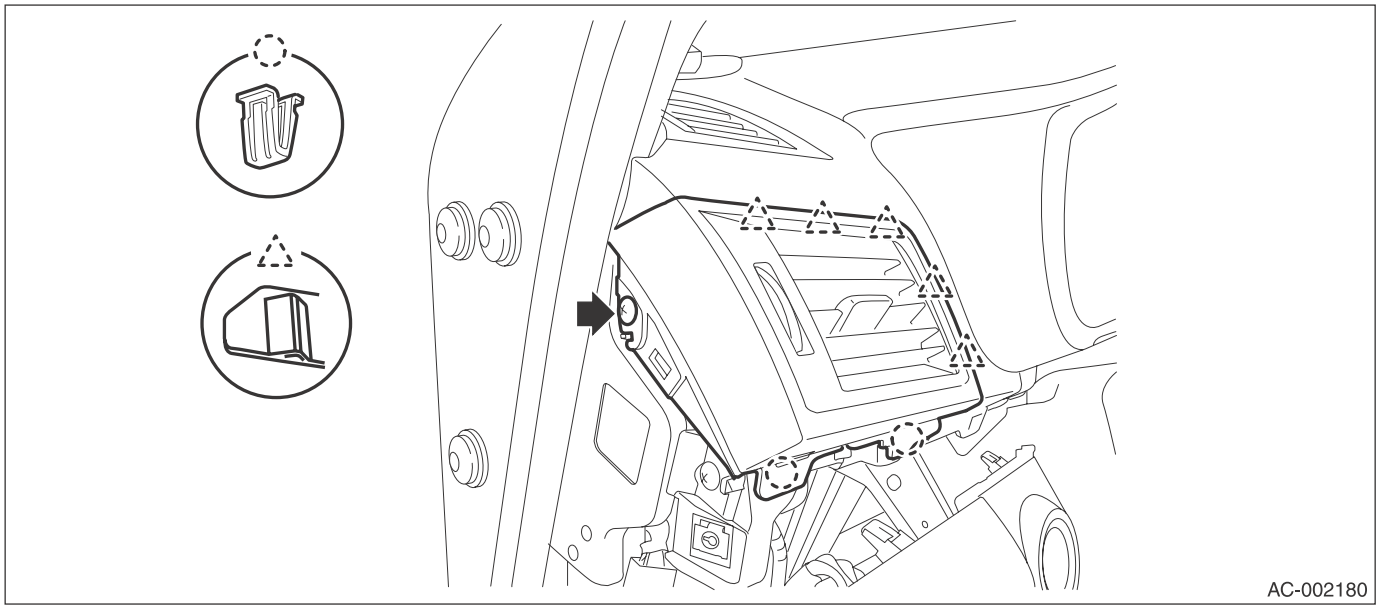

   (3) Release the claws, and then remove the side grille assembly LH.

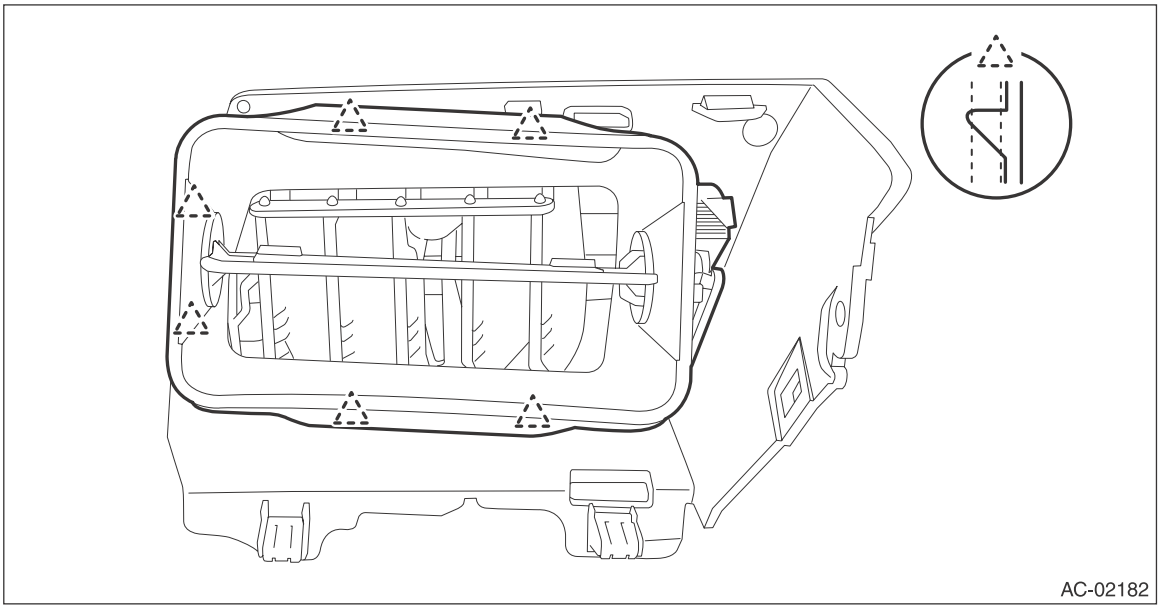

B: INSTALLATION

Install each part in the reverse order of removal.

C: INSPECTION

1) Check that the direction and amount of air can be adjusted smoothly. Replace the air vent grille if faulty.
2) Check that the adjustment can be maintained in each position. Replace the air vent grille if faulty.

25.Heater Duct

A: REMOVAL

1) Remove the front seats. <Ref. to SE-10, REMOVAL, Front Seat.>
2) Remove the instrument panel face assembly. <Ref. to EI-75, REMOVAL, Instrument Panel Assembly.>
3) Remove the rear heater duct.
   (1) Pull off the floor carpet to disengage the rear heater duct slide lock.
   (2) Release the claws, and then remove the rear heater duct LH and RH.

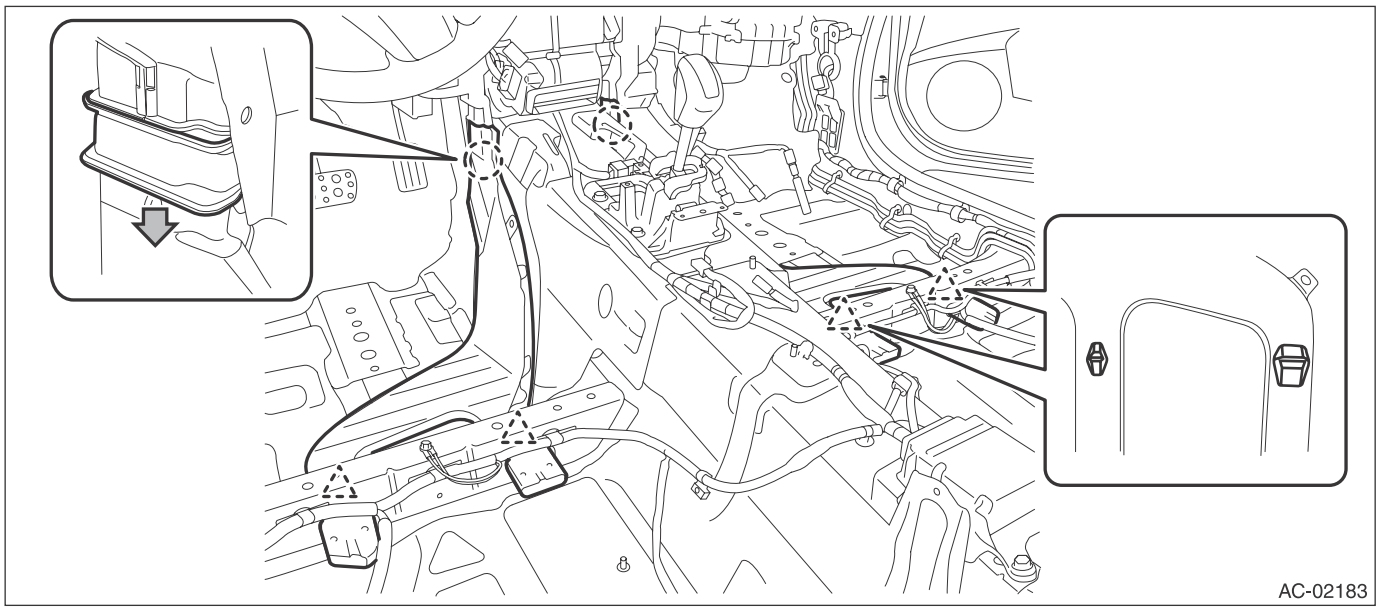

B: INSTALLATION

Install each part in the reverse order of removal.

26.Heater Vent Duct

A: REMOVAL

1) Remove the instrument panel face assembly. <Ref. to EI-75, REMOVAL, Instrument Panel Assembly.>
2) Remove the heater vent duct.
   (1) Remove the screws and detach the front vent duct (A).
   (2) Release the claws and remove the screws, then detach the side vent ducts LH and RH (B).

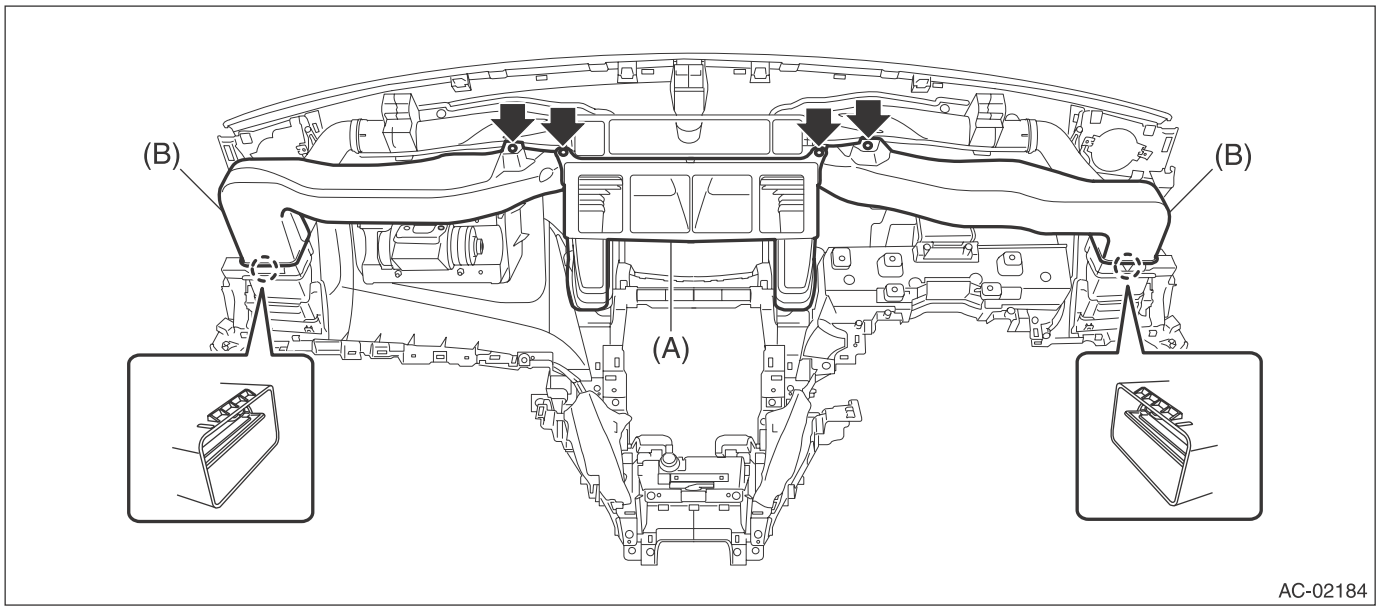

B: INSTALLATION

Install each part in the reverse order of removal.

27.A/C Filter

A: REPLACEMENT

1) Remove the glove box lid assembly.
   (1) Remove the glove box damper.
   (2) Release the stoppers and remove the glove box lid assembly by pulling it toward you.

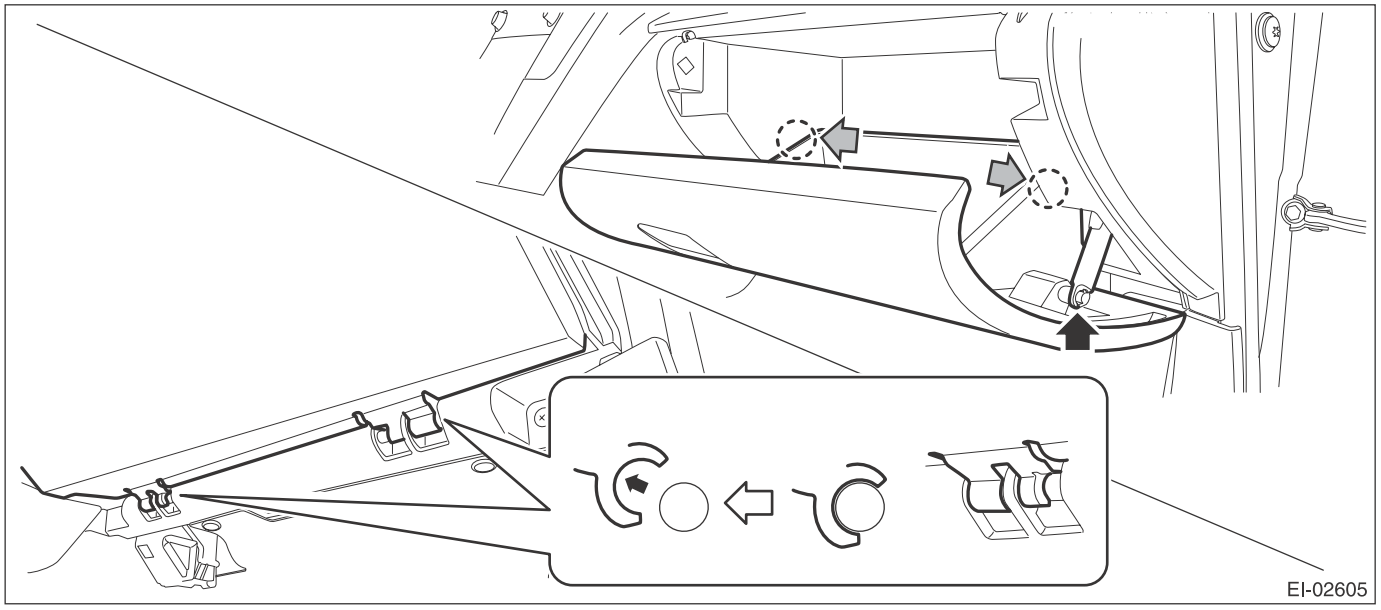

2) Remove the A/C filter.
   (1) Release the lock and remove the A/C filter cover.

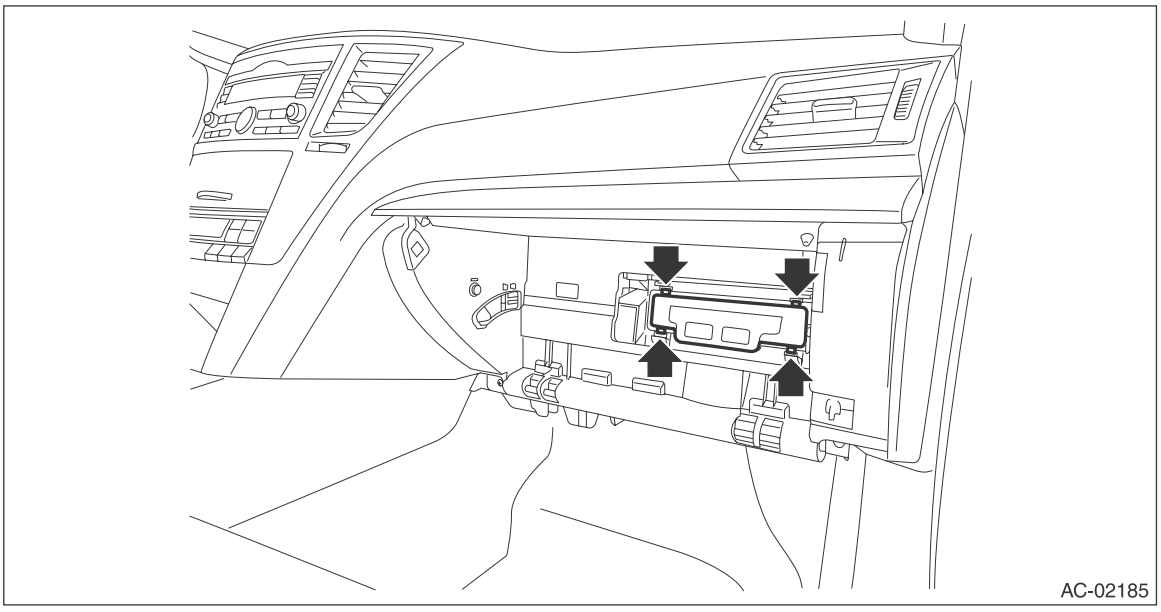

(2) Remove the A/C filter.

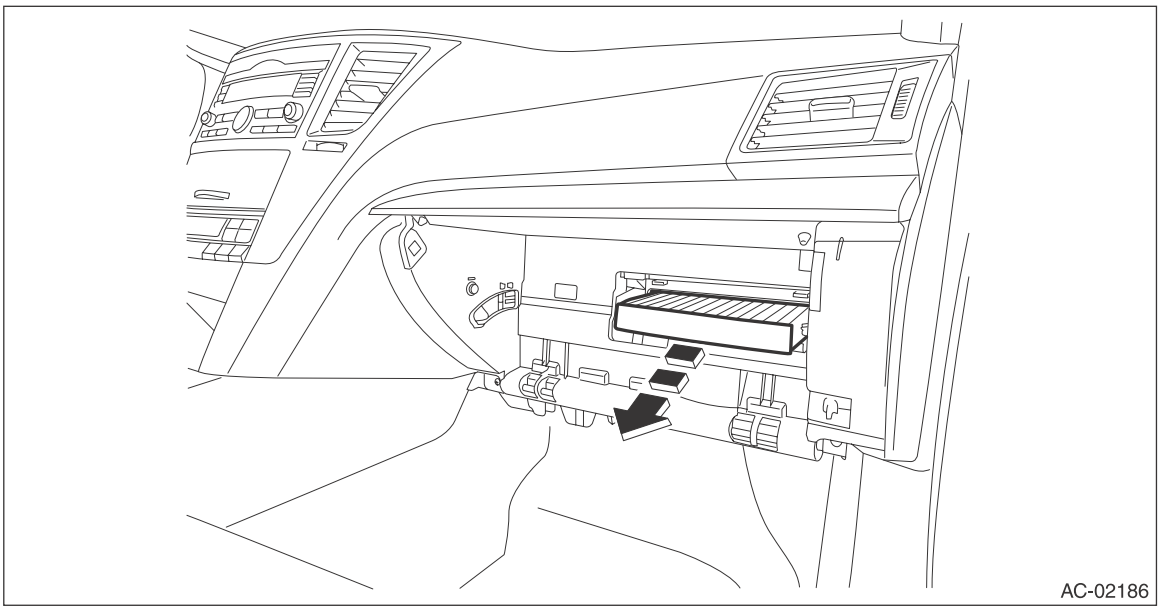

3) Install each part in the reverse order of removal.

28.General Diagnostic Table

A: INSPECTION

Refer to HVAC SYSTEM (AUTO A/C) (DIAGNOSTICS). <Ref. to AC(diag)-69, INSPECTION, Diagnostics with Phenomenon.>

HVAC SYSTEM (AUTO A/C) (DIAGNOSTICS)

AC(diag)

		Page
1.	Basic Diagnostic Procedure	2
2.	General Description	3
3.	Electrical Component Location	9
4.	Auto A/C Control Module I/O Signal	11
5.	Diagnostic Chart for Self-Diagnosis	13
6.	Diagnostics for A/C System Malfunction	16
7.	Diagnostic Procedure for Sensors	23
8.	Subaru Select Monitor	25
9.	Read Diagnostic Trouble Code (DTC)	26
10.	Clear Memory Mode	27
11.	Read Current Data	28
12.	Diagnostic Procedure for Subaru Select Monitor Communication	30
13.	List of Diagnostic Trouble Code (DTC)	31
14.	Diagnostic Procedure with Diagnostic Trouble Code (DTC)	33
15.	Diagnostics with Phenomenon	69

1. Basic Diagnostic Procedure

A: PROCEDURE

Step		Check	Yes	No
1	**START INSPECTIONS.** 1) Perform the pre-inspection. <Ref. to AC(diag)-3, INSPECTION, General Description.> 2) Perform the self-diagnosis. <Ref. to AC(diag)-13, OPERATION, Diagnostic Chart for Self-Diagnosis.>	Does the self-diagnosis operate?	Go to step **2**.	<Ref. to AC(diag)-16, A/C OR SELF-DIAGNOSIS SYSTEMS DO NOT OPERATE, Diagnostics for A/C System Malfunction.>
2	**CHECK DTC.** Read the DTC using Subaru Select Monitor. <Ref. to AC(diag)-26, OPERATION, Read Diagnostic Trouble Code (DTC).> NOTE: When freeze frame data is displayed with DTC, record all the data.	Is DTC displayed?	Perform the diagnosis according to DTC. <Ref. to AC(diag)-31, LIST, List of Diagnostic Trouble Code (DTC).>	Go to step **3**.
3	**CHECK COMPARTMENT TEMPERATURE.** 1) Turn the A/C switch to ON. 2) Turn the temperature control switch at maximum cool position. 3) Check the compartment temperature change.	Does the compartment temperature change?	Go to step **4**.	<Ref. to AC(diag)-21, COMPARTMENT TEMPERATURE DOES NOT CHANGE, OR A/C SYSTEM DOES NOT RESPOND PROMPTLY, Diagnostics for A/C System Malfunction.>
4	**CHECK A/C SYSTEM RESPONSE.** Change the temperature setting, and check the response of A/C system.	Does the A/C system respond quickly?	A/C system is normal.	<Ref. to AC(diag)-21, COMPARTMENT TEMPERATURE DOES NOT CHANGE, OR A/C SYSTEM DOES NOT RESPOND PROMPTLY, Diagnostics for A/C System Malfunction.>

2. General Description

A: CAUTION

1) Never connect the battery in reverse polarity.
• Doing so may immediately damage the A/C control module.
2) Do not disconnect the battery terminals while the engine is running.
• A large counter electromotive force will be generated in the generator, and this voltage may damage electronic parts such as A/C control module etc.
3) Before disconnecting the connectors of sensors and the A/C control module, be sure to turn off the ignition switch.
• A/C control module may be damaged.
4) Every A/C-related part is a precision part. Do not drop them.
5) Airbag system wiring harness is routed near the A/C control panel and junction box.

CAUTION:
• Do not use electrical test devices on airbag system wiring harnesses or connectors.
• Be careful not to damage the airbag system wiring harness when servicing the A/C control panel and junction box.

B: INSPECTION

Before performing the diagnosis, check the following items which may cause problems in the A/C system.

1. BATTERY

1) Measure the battery voltage and specific gravity of the electrolyte.

Standard voltage:
12 V

Specific gravity:
1.260 or more

2) Check the condition of the fuses for A/C system power supply and other fuses.
3) Check the condition of harness and harness connector connections.

2. ASPIRATOR HOSE

1) Turn the ignition switch to ON, and press the A/C switch.
2) Turn the temperature control switch to maximum hot position.
3) Set the blow vents to the DEF position.
4) Set the FAN switch to the MAX position.

5) Put a strip of paper close to the front side of in-vehicle sensor suction port (A) located in the instrument panel lower cover, and check that air is being sucked into the port by seeing the paper moving towards the port.

NOTE:
Be careful not to let the paper get sucked into the port.

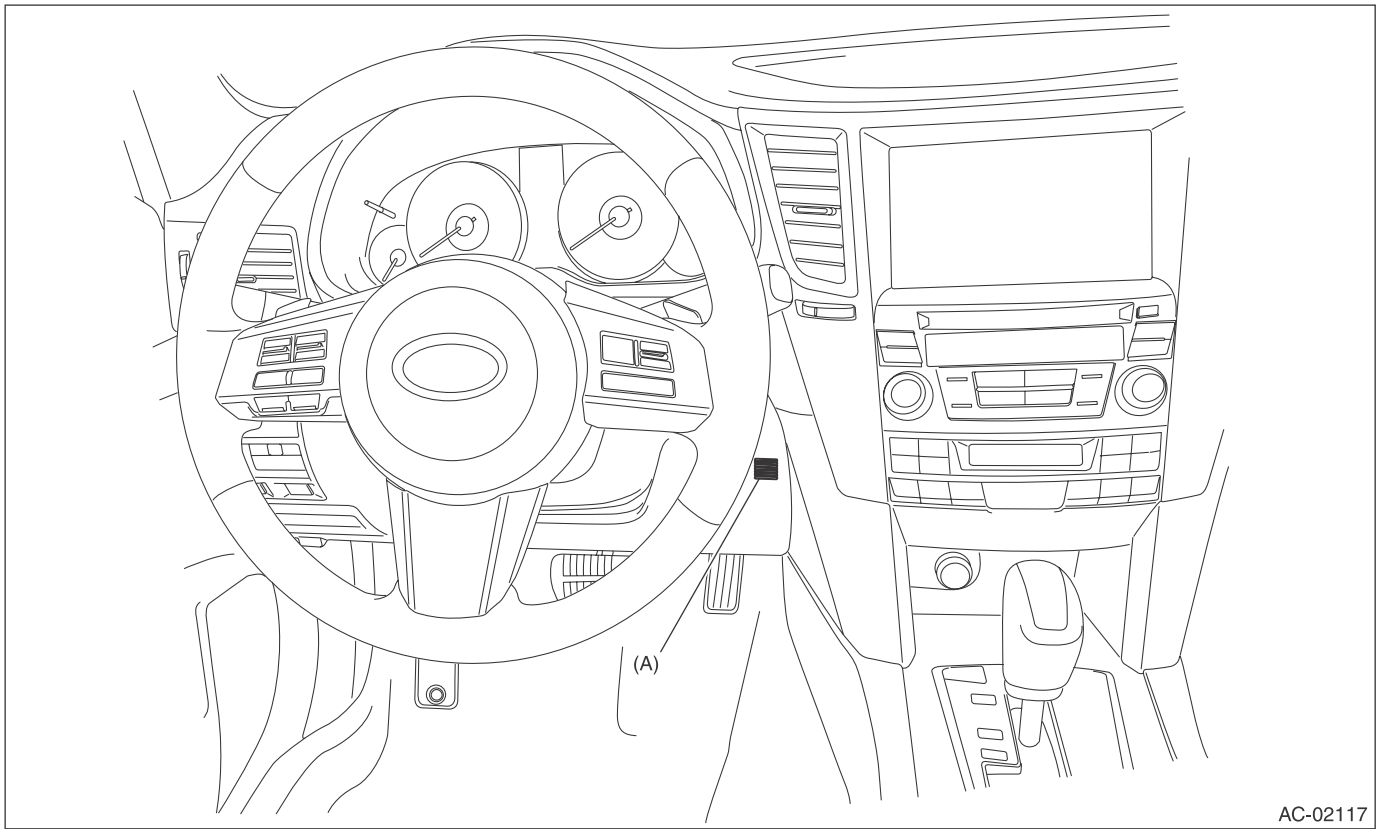

6) If the paper does not move at all, remove the instrument panel lower cover <Ref. to EI-63, REMOVAL, Instrument Panel Lower Cover.> and check for poor connection of the aspirator hose (A), in-vehicle sensor and heater unit, and repair them if necessary.

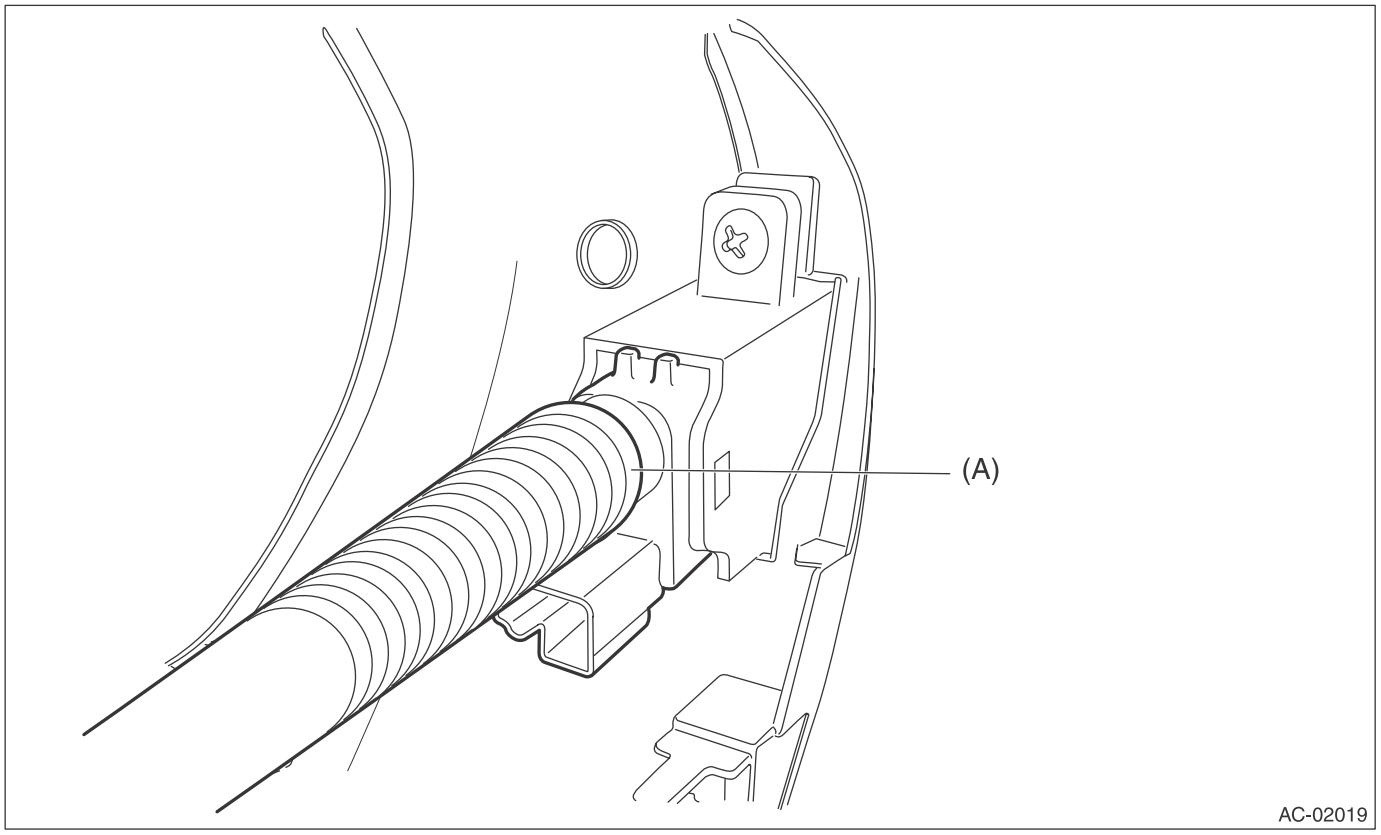

3. A/C LINE

Check the connection for A/C line (A) and lower side high-pressure pipe.

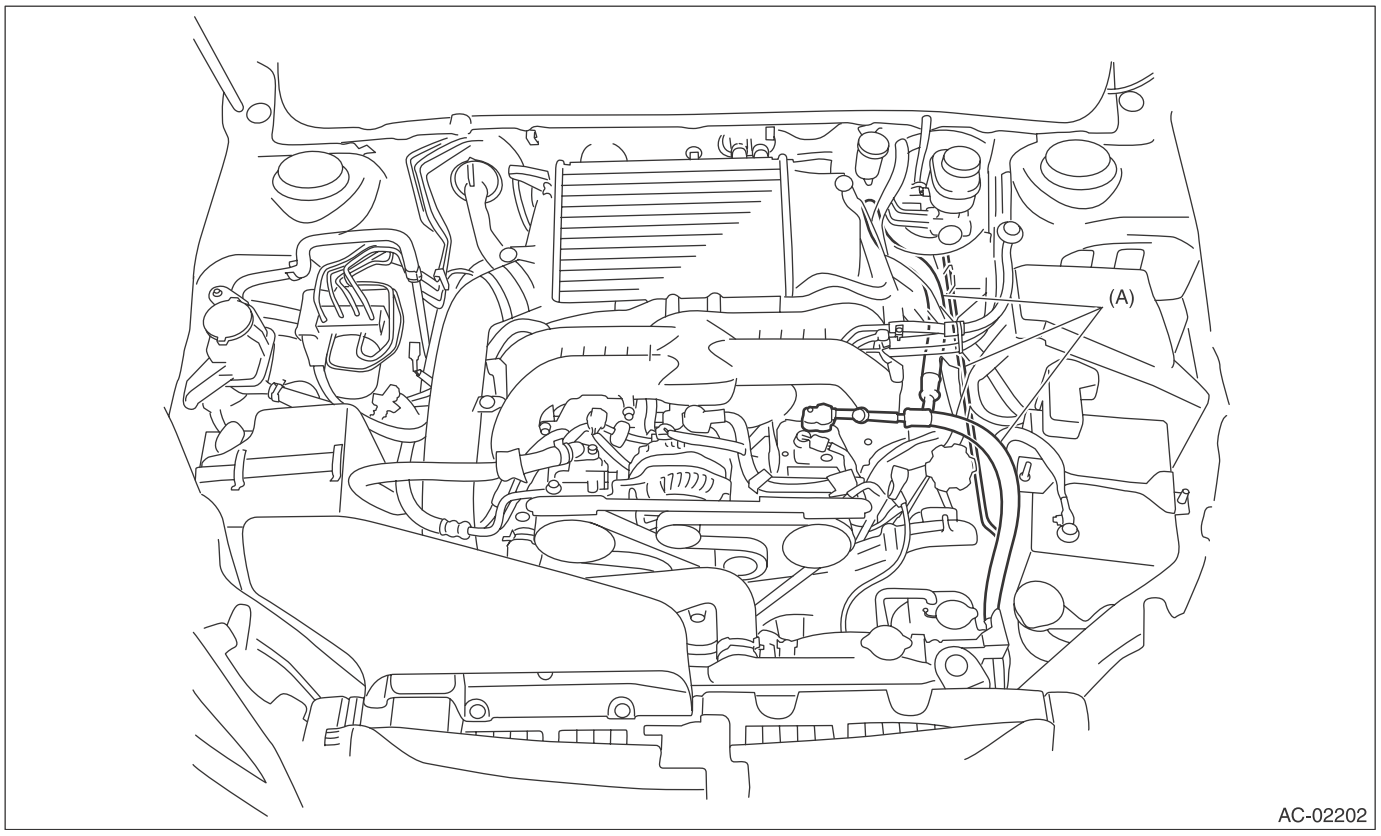

4. CONTROL LINKAGE

1) Check the state of mode door linkage.
2) Check the state of air mix door linkage.
3) Check the state of FRESH/RECIRC door linkage.

5. CONTROL SWITCHES

Start the engine and warm up completely.

1) Inspection using switches

No.	Point to check	Switch operation	Judgment standard
1	OFF switch	Press the OFF switch.	Setting temperature display goes out. • Blower fan: OFF • Inlet opening: FRESH • Compressor: OFF
2	AUTO switch, driver's side temperature control switch, and passenger's side temperature control switch	1) Press the AUTO switch. 2) Press the temperature control switch to set to LO (maximum cool position).	FULL AUTO display illuminates. • Outlet air temperature: COOL • Blower fan: HI (AUTO) • Outlet opening: FACE • Inlet opening: AUTO • Compressor: AUTO
		3) Press the temperature control switch to change the setting from LO (maximum cool position) to HI.	• Outlet air temperature: COOL → HOT • Blower fan: AUTO • Outlet opening: FACE → B/L → FOOT • Inlet opening: AUTO • Compressor: AUTO
		4) Press the temperature control switch to set to HI (maximum hot position).	• Outlet air temperature: HOT • Blower fan: HI (AUTO) • Outlet opening: FOOT • Inlet opening: FRESH (AUTO) • Compressor: AUTO
3	Defroster switch	Press the defroster switch.	Defroster switch indicator illuminates. • Outlet air temperature: AUTO • Blower fan: AUTO • Outlet opening: DEF • Inlet opening: FRESH • Compressor: ON
4	FRESH/RECIRC switch	Press the FRESH/RECIRC switch.	Inlet opening switches RECIRC → FRESH or FRESH → RECIRC each time pressing the switch.
5	MODE switch	Press the MODE switch.	Outlet opening switches FACE → B/L → FOOT → F/D each time pressing the switch.
6	FAN switch	Press the FAN (+) switch.	Blower fan switches LO → M1 → M2 → M3 → M4 → HI each time pressing the switch.

2) Inspection of compressor operation

No.	Point to check	Switch operation	Judgment standard
1	Compressor	1) Turn the A/C switch to ON. 2) Set the FAN switch between LO and HI.	Compressor: ON

3) Inspection of illumination control

No.	Point to check	Switch operation	Judgment standard
1	Illumination	Turn the lighting switch to ON.	Illumination comes on.

C: PREPARATION TOOL

1. SPECIAL TOOL

ILLUSTRATION	TOOL NUMBER	DESCRIPTION	REMARKS
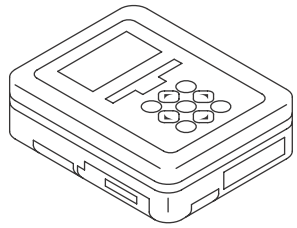 ST1B022XU0	1B022XU0	SUBARU SELECT MONITOR III KIT	Used for troubleshooting the electrical system.

2. GENERAL TOOL

TOOL NAME	REMARKS
Circuit tester	Used for measuring resistance, voltage and current.

3. Electrical Component Location

A: LOCATION

1. ENGINE COMPARTMENT

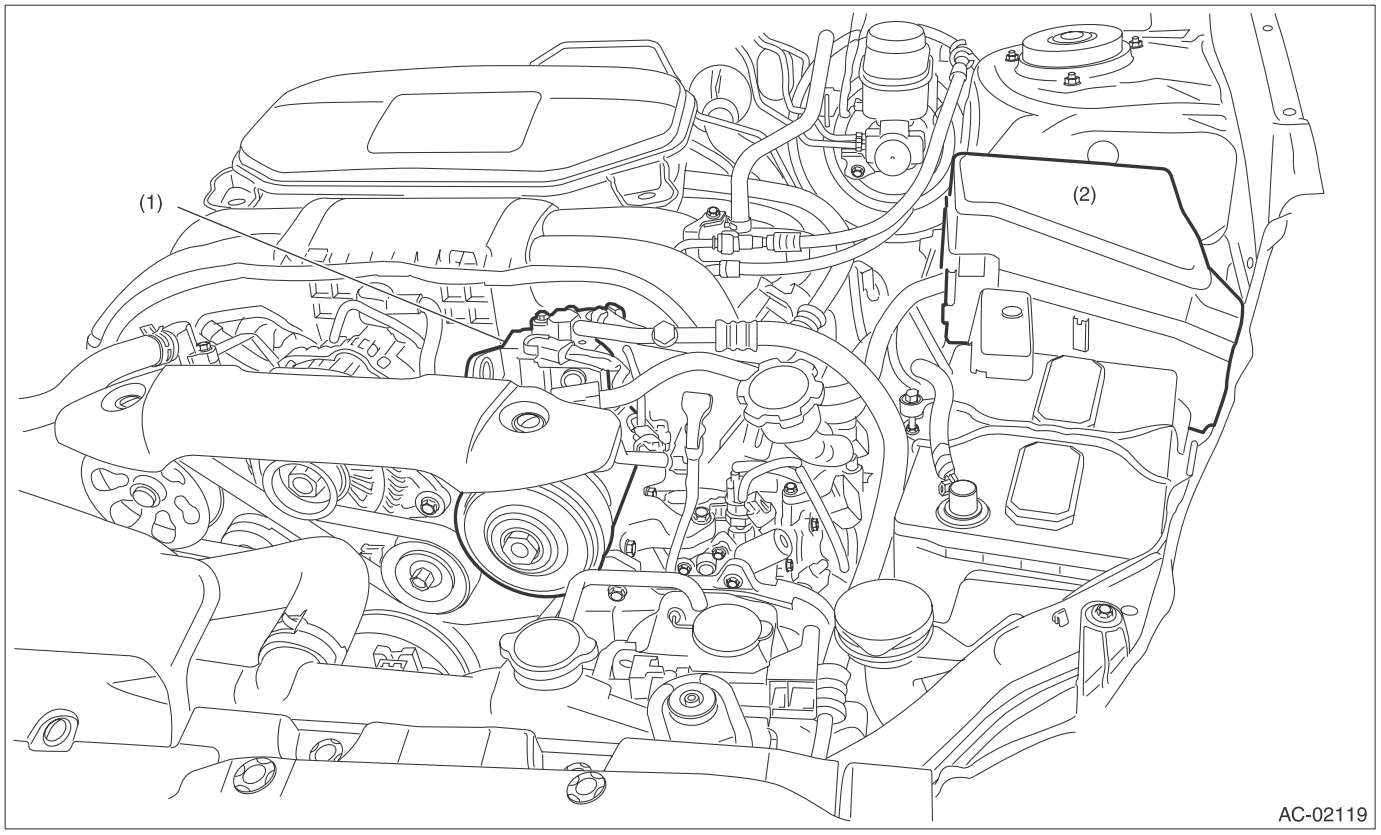

(1) A/C compressor
(2) A/C relay
(3) Pressure sensor
(4) Ambient sensor

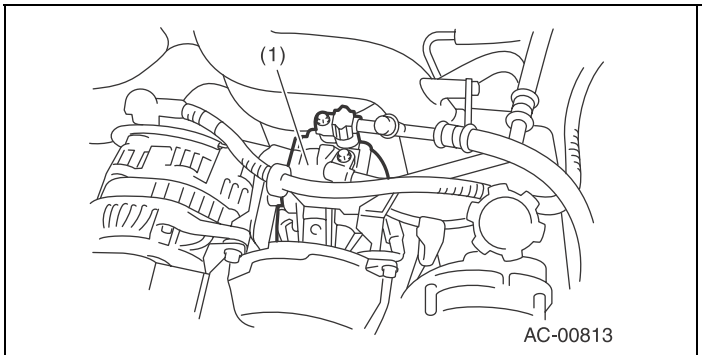

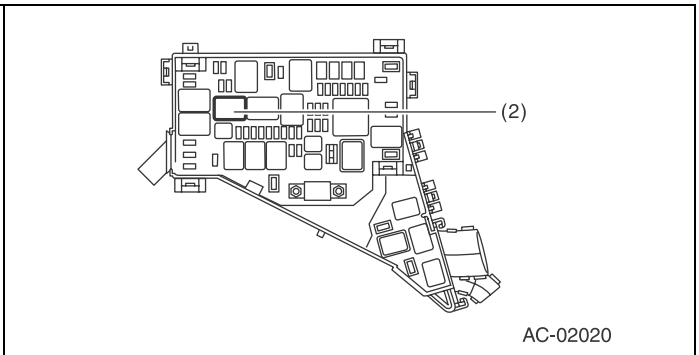

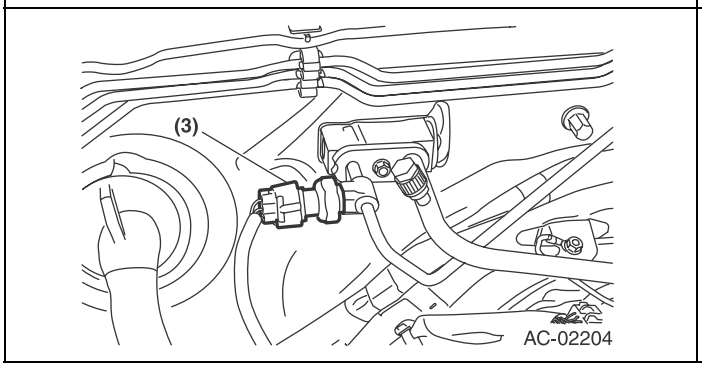

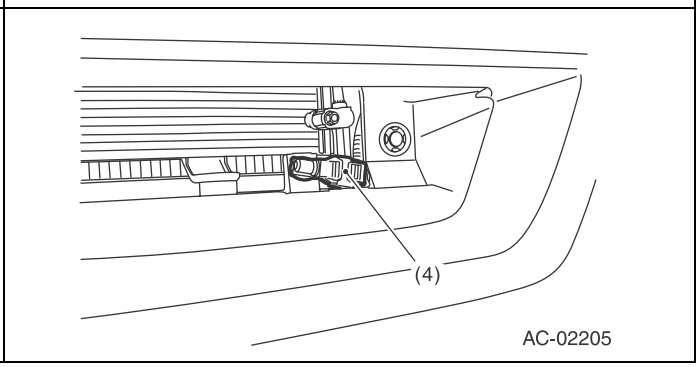

2. PASSENGER COMPARTMENT

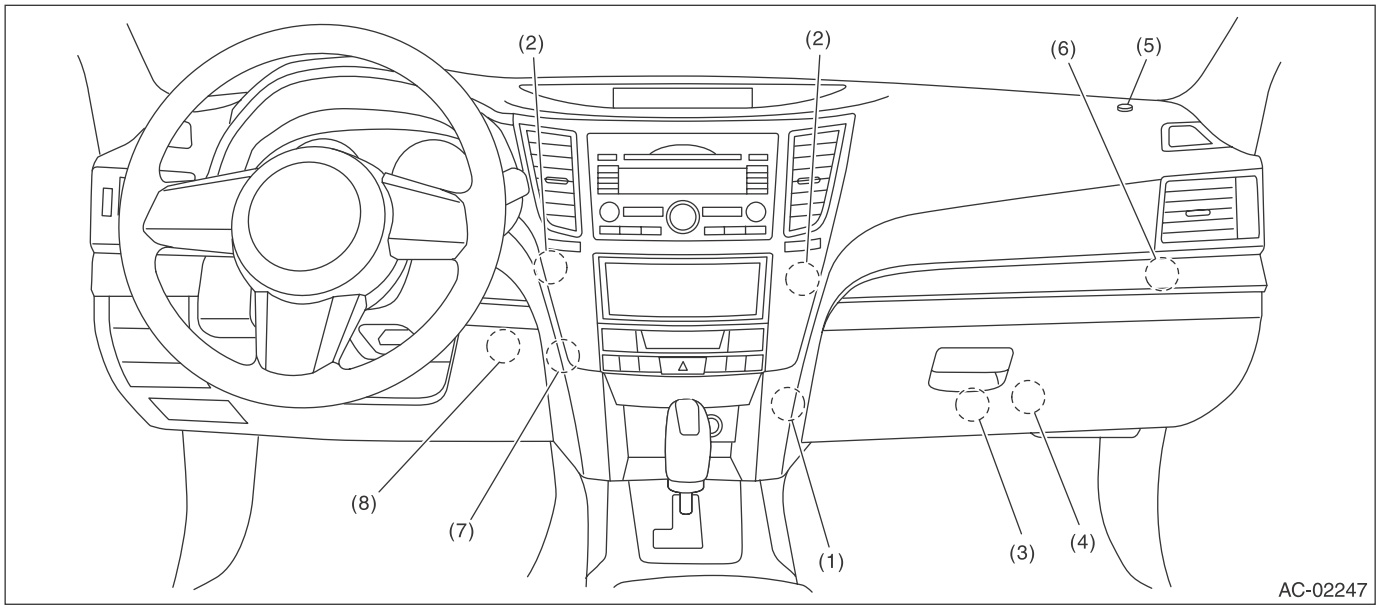

(1) Evaporator sensor
(2) Air mix door actuator
(3) A/C control module
(4) Blower motor
(5) Sunload sensor
(6) Intake door actuator
(7) Mode door actuator
(8) In-vehicle sensor

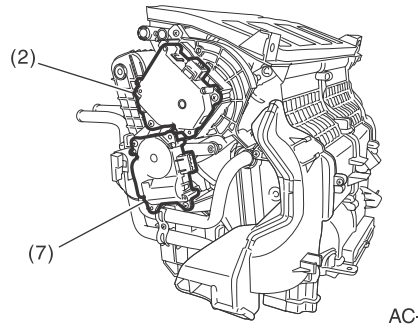

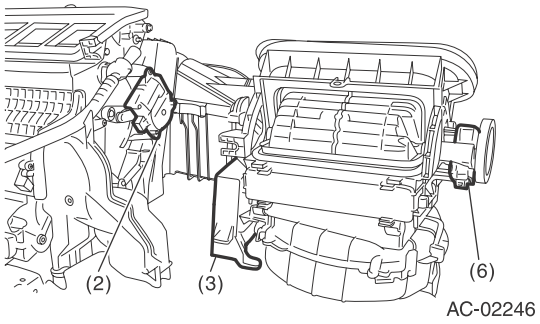

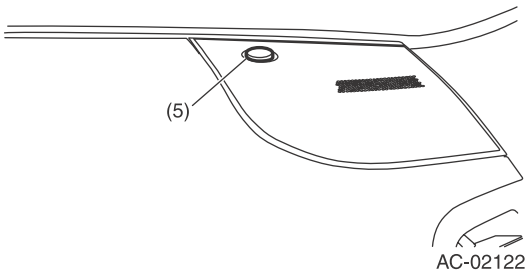

4. Auto A/C Control Module I/O Signal

A: ELECTRICAL SPECIFICATION

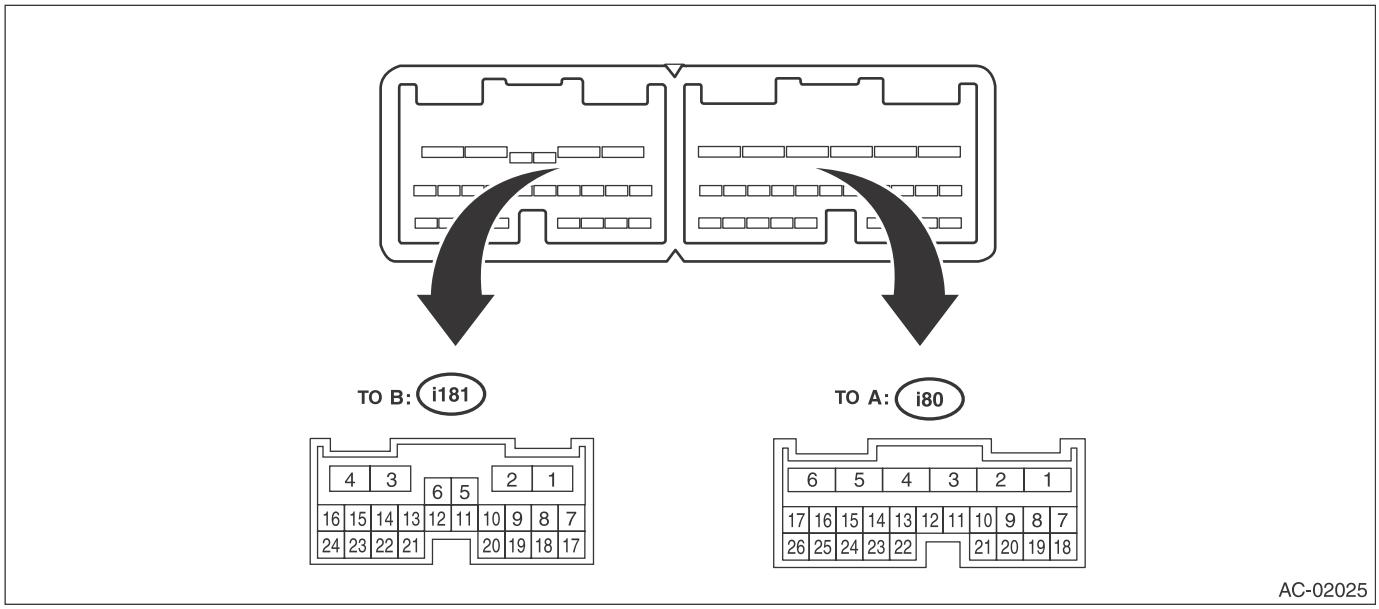

Terminal No.	Description	Measuring condition	Standard
A1	Battery power supply	Ignition switch: OFF	Battery voltage
A2	Ignition power supply	Ignition switch: ON	Battery voltage
A3	ACC power supply	Ignition switch: ACC	Battery voltage
A4	CAN communication (Hi)	Digital signal; can not be measured	*1
A5	CAN communication (Lo)	Digital signal; can not be measured	*1
A6	Ground	Always	0 V
A7	A/C control panel communication	Digital signal; can not be measured	*1
A11	In-vehicle sensor	Ignition switch: ON	25°C: Approx. 1.5 V 40°C: Approx. 1.0 V
A13	Flow sensor	Ignition switch: ON	0.3 — 4.7 V
A14	Air mix door (driver's seat) position signal	Ignition switch: ON, Air mix door: maximum cool position	4 V
		Ignition switch: ON, Air mix door: maximum hot position	1 V
A16	Each potentiometer and sensor power supply	Ignition switch: ON	5 V
A18	A/C control panel communication	Digital signal; can not be measured	*1
A19	Pressure switch signal	Ignition switch: ON	Normal: ON Abnormal: OFF
A21	After-evaporator sensor signal	Ignition switch: ON, fluctuates depending on temperature after the evaporator.	1 — 4.5 V
A22	Pressure sensor	Ignition switch: ON	0.5 — 4.9 V
A23	Sunload sensor	Ignition switch: ON (0 V: No sunload)	0 — 4.9 V
A24	Sunload sensor (with automatic light)	Ignition switch: ON (0 V: No sunload)	0 — 4.9 V
A25	Air mix door actuator (passenger's seat) position signal	Ignition switch: ON, Air mix door: maximum cool position	4 V
		Ignition switch: ON, Air mix door: maximum hot position	1 V
A26	Mode door actuator position signal	Ignition switch: ON, Mode door: FACE position	4 V
		Ignition switch: ON, Mode door: DEF position	1 V
B1	Sensor GND	Always	Less than 0.5 V

Terminal No.	Description	Measuring condition	Standard
B2	Variable compressor solenoid valve	Ignition switch: ON, Blower switch: ON, A/C switch: ON	2 — 12 V
B3	Intake door actuator drive signal (FRESH)	Intake door actuator operating on the FRESH side	0.7 V or less
B4	Air mix door actuator (passenger's seat) drive signal (HOT)	Turning towards HOT side: B4 is 12 V, B16 is GND	While operating: 12 V While not operating: 0 V
B16	Air mix door actuator (passenger's seat) drive signal (COOL)	Turning towards COOL side: B16 is 12 V, B4 is GND	
B6	Intake door actuator drive signal (RECIRC)	Intake door actuator operating on the RECIRC side	0.7 V or less
B8	Blower motor voltage feedback	Ignition switch: ON, Blower switch: ON	0.45 — 10 V
B9	Blower motor control signal	Ignition switch: ON, Blower switch: ON	9.05 V
B11	Mode servo drive signal (FACE)	When turning towards FACE side: B11 is 12 V, B13 is GND	While operating: 12 V While not operating: 0 V
B13	Mode servo drive signal (DEF)	When turning towards DEF side: B11 is GND, B13 is 12 V	
B20	Heater main relay drive signal	Ignition switch: ON, Blower switch: ON	0.7 V or less
B21	Air mix door actuator (driver's seat) drive signal (COOL)	Turning towards COOL side: B21 is 12 V, B22 is GND	While operating: 12 V While not operating: 0 V
B22	Air mix door actuator (driver's seat) drive signal (HOT)	Turning towards HOT side: B22 is 12 V, B21 is GND	

*1: Battery voltage cannot be measured because of digital signal.

B: WIRING DIAGRAM

1. AIR CONDITIONER A/C MODEL

<Ref. to WI-41, WIRING DIAGRAM, Air Conditioning System.>

5. Diagnostic Chart for Self-Diagnosis

A: OPERATION

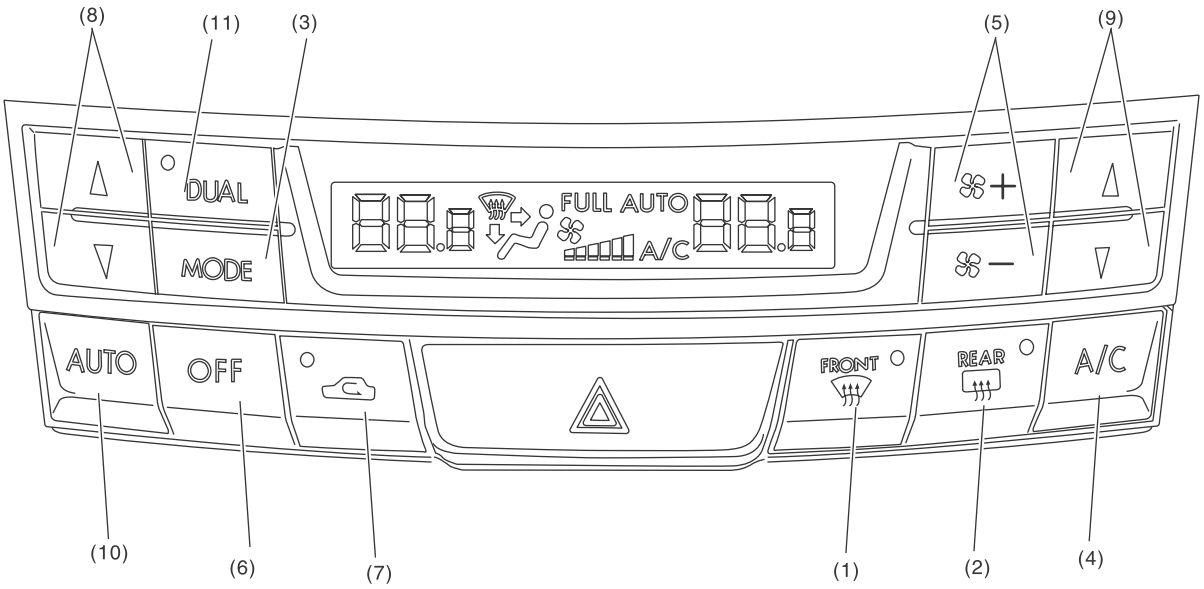

AC-02125

(1) Defroster switch
(2) Rear window defogger switch
(3) Air flow control switch
(4) A/C switch
(5) FAN switch
(6) OFF switch
(7) FRESH/RECIRC switch
(8) Temperature control switch (for driver's seat)
(9) Temperature control switch (for passenger's seat)
(10) AUTO switch
(11) DUAL switch

1. A/C CONTROL SYSTEM SELF-DIAGNOSIS

	Step	Check	Yes	No
1	**SET SELF-DIAGNOSIS MODE BY OPERATING A/C CONTROL PANEL.** 1) Turn the ignition switch to OFF. 2) Start the engine while holding down the AUTO switch and FRESH/RECIRC switch. NOTE: Self-diagnosis can also be performed with ignition switch ON, but start the engine because observing the compressor operation is difficult. 3) All the indicators blink four times.	Does the self-diagnosis function operate?	Go to step **2**.	<Ref. to AC(diag)-16, A/C OR SELF-DIAGNOSIS SYSTEMS DO NOT OPERATE, Diagnostics for A/C System Malfunction.>
2	**CHECK EACH SENSOR AND POTENTIOMETER.** 1) After the indicators stop blinking, automatically change to the Inspection Mode of sensor and potentiometer. NOTE: Display items can be changed each time the A/C switch is pressed. (Step Operation) 2) When malfunction occurs in each sensor and potentiometer, codes are displayed on the screen. When no malfunction occurs in each sensor and potentiometer, code “20” is displayed on the screen. 3) Identify defective sensors according to the sensor check table. <Ref. to AC(diag)-15, SENSOR CHECK TABLE, OPERATION, Diagnostic Chart for Self-Diagnosis.>	Are other codes except “20” displayed?	Repair the defective sensor.	Go to step **3**.
3	**CHECK EACH ACTUATOR, BLOWER FAN AND COMPRESSOR.** 1) After completing each sensor and potentiometer inspection, change to the Inspection Mode of actuator, blower fan and compressor by pressing the defroster switch. 2) Each mode will change and operate automatically every four seconds. NOTE: Operation mode items can be changed each time the A/C switch is pressed. (Step Operation) 3) Check the operation of actuator, blower fan and compressor in each mode according to the operating mode table. <Ref. to AC(diag)-15, OPERATING MODE TABLE, OPERATION, Diagnostic Chart for Self-Diagnosis.>	Do the actuator, blower fan and compressor operate as described in the operating mode table?	A/C control system is normal. Press the OFF switch and complete the self-diagnosis function.	Repair the defective part in accordance with each diagnostic chart. <Ref. to AC(diag)-16, Diagnostics for A/C System Malfunction.>

2. SENSOR CHECK TABLE

NOTE:
When the sunload sensor check is performed indoors or in the shade, it could be diagnosed as having an open circuit. Always check the sunload sensor with the sun shining on it.

Display screen (Malfunction at present)	SENSOR	Trouble contents
21/AUTO blinking	In-vehicle sensor	Open
–21/AUTO blinking		Short
22/AUTO blinking	Ambient sensor	Sensor trouble or communication failure
23/AUTO blinking	Evaporator sensor	Open
–23/AUTO blinking		Short
24/AUTO blinking	Engine coolant temperature sensor	Sensor trouble or communication failure
25 blinking	Sunload sensor	Open *1
–25/AUTO blinking		Short
26/AUTO blinking	Air mix door actuator — potentiometer (driver's)	COOL
–26/AUTO blinking	Air mix door actuator — potentiometer (passenger's)	COOL
27/AUTO blinking	Air mix door actuator — potentiometer (driver's)	HOT
–27/AUTO blinking	Air mix door actuator — potentiometer (passenger's)	HOT
28/AUTO blinking	Mode door actuator — potensiometer	FACE
29/AUTO blinking		DEF
42/AUTO blinking	Pressure sensor	Open *1
–42/AUTO blinking		Short circuit *1
43/AUTO blinking	Flow sensor	Open *1
–43/AUTO blinking		Short circuit *1
44/AUTO blinking		Faulty
45/AUTO blinking	Sunload sensor	Open
–45/AUTO blinking		Short
46/AUTO blinking	Variable valve	Open or short circuit *1
47/AUTO blinking	Air mix door actuator (driver's)	Lock
48/AUTO blinking	Air mix door actuator (passenger's)	Lock
49/AUTO blinking	Mode door actuator	Lock
53/AUTO blinking	Control panel communication	Faulty
54/AUTO blinking	CAN communication	Bus off
55/AUTO blinking	CAN communication	Communication error
20 blinking	When all conditions are normal	

*1: Displays current malfunction only.

3. OPERATING MODE TABLE

Display screen	Blower fan	Mode door	FRESH/RECIRC door	A/C compressor	Air mix door
31	LO	FACE	FRESH	OFF	Cold air
32	LO	FACE	RECIRC	ON	Cold air
33	M1	FACE	RECIRC	ON	Cold air
34	M1	B/L	FRESH	ON	Middle temperature air
35	M1	FOOT	FRESH	ON	Middle temperature air
36	M3	FOOT	FRESH	ON	Hot air
37	M3	F/D	FRESH	ON	Hot air
38	HI	DEF	FRESH	ON	Hot air

6. Diagnostics for A/C System Malfunction

A: A/C OR SELF-DIAGNOSIS SYSTEMS DO NOT OPERATE

TROUBLE SYMPTOM:

- Set temperature is not indicated on the display, switch LEDs are faulty and switches do not operate.
- Self-diagnosis system does not operate.

WIRING DIAGRAM:

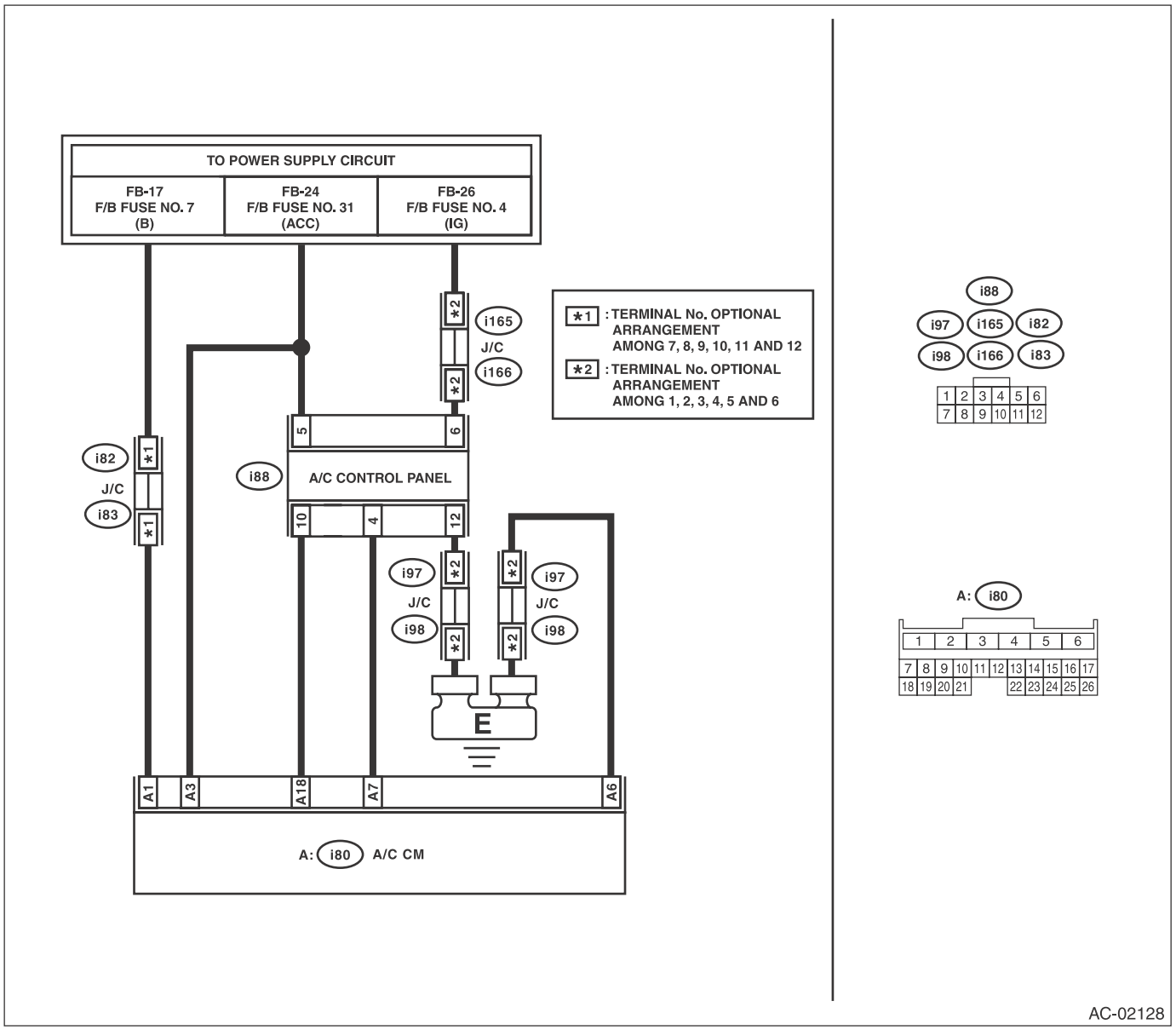

Step		Check	Yes	No
1	**CHECK FUSE.** 1) Turn the ignition switch to OFF. 2) Remove the fuse No. 7 from main fuse box. 3) Check the condition of fuse.	Is the fuse blown out?	Replace the fuse.	Go to step **2**.
2	**CHECK FUSE.** 1) Turn the ignition switch to OFF. 2) Remove the fuse No. 12 and No. 31 from fuse & relay box. 3) Check the condition of fuse.	Is the fuse blown out?	Replace the fuse.	Go to step **3**.

	Step	Check	Yes	No
3	**CHECK A/C CONTROL PANEL POWER CIRCUIT.** 1) Remove the A/C control panel. 2) Disconnect the A/C control panel harness connector. 3) Turn the ignition switch to ACC, and measure the voltage between A/C control panel harness connector terminal and chassis ground. ***Connector & terminal*** ***(i88) No. 5 (+) — Chassis ground (–):***	Is the voltage 10 V or more?	Go to step **4**.	Check for open or short circuit in the harness between A/C control panel and fuse.
4	**CHECK A/C CONTROL PANEL POWER CIRCUIT.** Measure the voltage between A/C control panel harness connector terminal and chassis ground after turning the ignition switch to ON. ***Connector & terminal*** ***(i88) No. 6 (+) — Chassis ground (–):***	Is the voltage 10 V or more?	Go to step **5**.	Check for open or short circuit in the harness between A/C control panel and fuse.
5	**CHECK A/C CONTROL PANEL GROUND POWER CIRCUIT.** Measure the resistance of harness between A/C control panel and chassis ground after turning the ignition switch to OFF. ***Connector & terminal*** ***(i88) No. 12 — Chassis ground:***	Is the resistance less than 10 Ω?	Go to step **6**.	Repair the harness for ground line.
6	**CHECK A/C CONTROL MODULE POWER CIRCUIT.** Measure the voltage between A/C control module connector terminal and chassis ground after turning the ignition switch to OFF. ***Connector & terminal*** ***(i80) No. 1 (+) — Chassis ground (–):***	Is the voltage 10 V or more?	Go to step **7**.	Check for open or short circuit in the harness between A/C control module and fuse.
7	**CHECK A/C CONTROL MODULE POWER CIRCUIT.** Measure the voltage between A/C control module connector terminal and chassis ground after turning the ignition switch to ON. ***Connector & terminal*** ***(i80) No. 3 (+) — Chassis ground (–):***	Is the voltage 10 V or more?	Go to step **8**.	Check for open or short circuit in the harness between A/C control module and fuse.
8	**CHECK A/C CONTROL MODULE GROUND CIRCUIT.** Measure the resistance of harness between A/C control module and chassis ground. ***Connector & terminal*** ***(i80) No. 6 — Chassis ground:***	Is the resistance less than 5 Ω?	Go to step **9**.	Repair the harness for ground line.
9	**CHECK COMMUNICATION CIRCUIT.** Measure the resistance of harness between A/C control panel and A/C control module. ***Connector & terminal*** ***(i88) No. 10 — (i80) No. 10:*** ***(i88) No. 4 — (i80) No. 7:***	Is the resistance less than 1 Ω?	Go to step **10**.	Repair the harness.
10	**CHECK COMMUNICATION CIRCUIT HARNESS.** Measure the resistance between communication circuit harness and chassis ground. ***Connector & terminal*** ***(i80) No. 18 — Chassis ground:*** ***(i80) No. 7 — Chassis ground:***	Is the resistance 1 MΩ or more?	Repair or replace the short circuit of the harness.	Go to step **11**.

	Step	Check	Yes	No
11	**CHECK FOR POOR CONTACT.** Check poor contact of A/C control module connector.	Is there poor contact of connector?	Repair the connector.	Replace the A/C CM. <Ref. to AC-46, REMOVAL, Control Unit.>

B: BLOWER MOTOR DOES NOT ROTATE

TROUBLE SYMPTOM:

- Blower motor does not rotate.
- Blower motor does not rotate in “HI”.

WIRING DIAGRAM:

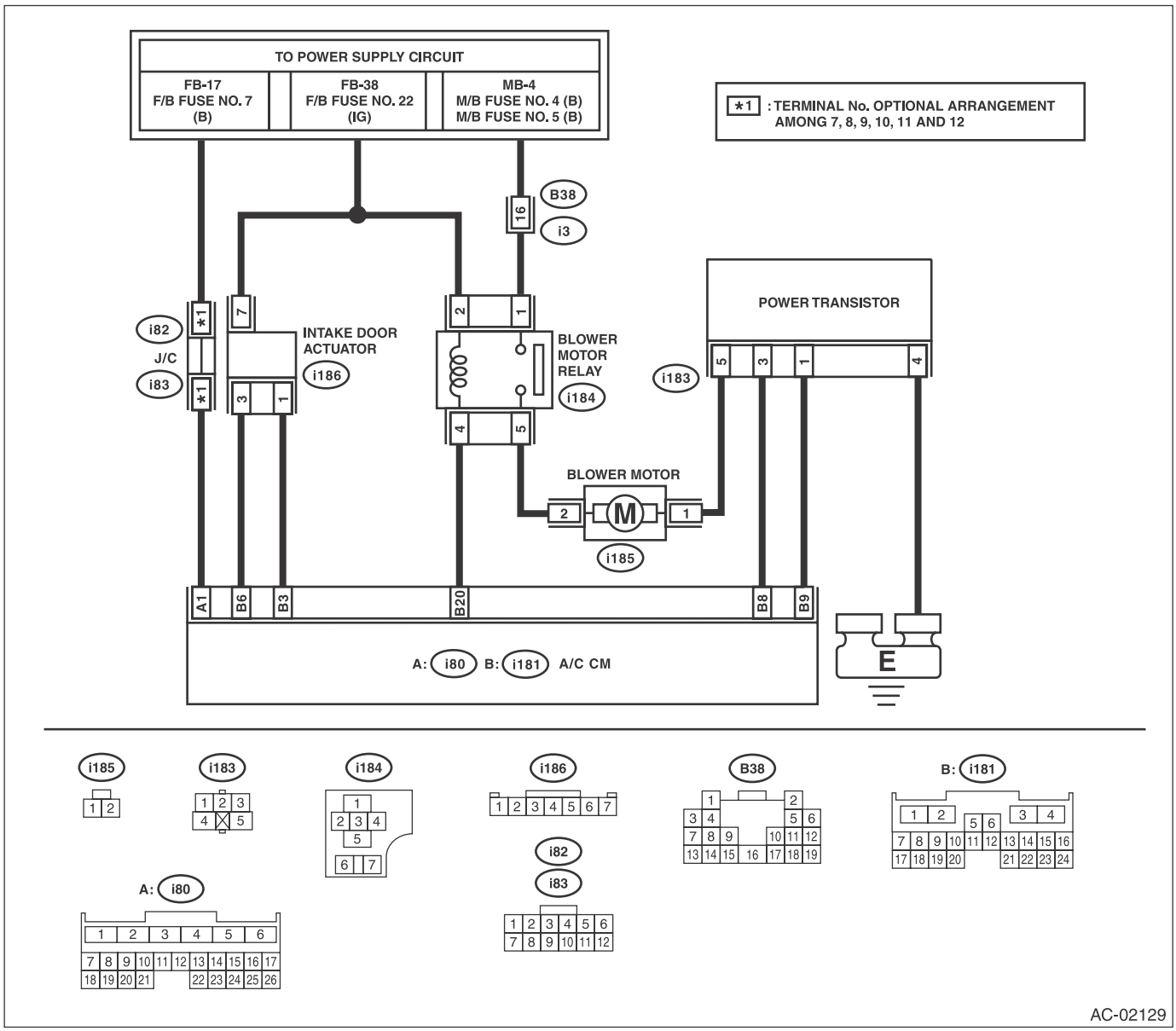

Step		Check	Yes	No
1	**CHECK FUSE.** 1) Remove fuse No. 22 and 7 from fuse & relay box, and fuse No. 4 and 5 from the main fuse box. 2) Check the condition of fuse.	Is any fuse blown out?	Replace the fuse.	Go to step **2**.
2	**CHECK POWER SUPPLY FOR BLOWER MOTOR.** 1) Turn the ignition switch to ON. 2) Turn the blower switch to ON. 3) Measure the voltage between blower motor and chassis ground. ***Connector & terminal*** ***(i185) No. 2 (+) — Chassis ground (–):***	Is the voltage 10 V or more?	Go to step **3**.	Repair the open circuit of blower motor power supply line harness.

	Step	Check	Yes	No
3	**CHECK BLOWER MOTOR RELAY.** 1) Turn the ignition switch to OFF. 2) Remove the blower motor relay. 3) Connect battery terminals to the blower motor relay. ***Terminals*** ***No. 2 — No. 4:*** 4) Measure the resistance between terminals. ***Terminals*** ***No. 1 — No. 5:***	Is the resistance less than 1 Ω?	Go to step **4**.	Replace the blower motor relay.
4	**CHECK BLOWER MOTOR.** 1) Disconnect the connector from blower motor. 2) Connect the battery positive (+) terminal to terminal No. 2 of blower motor connector, and negative (–) terminal to terminal No. 1. 3) Make sure the blower motor runs.	Does the blower motor run?	Go to step **5**.	Replace the blower motor.
5	**CHECK FOR POOR CONTACT.** Check poor contact of A/C control module connector.	Is there poor contact of connector?	Repair the connector.	Replace the A/C CM. <Ref. to AC-46, REMOVAL, Control Unit.>

C: COMPARTMENT TEMPERATURE DOES NOT CHANGE, OR A/C SYSTEM DOES NOT RESPOND PROMPTLY

WIRING DIAGRAM:

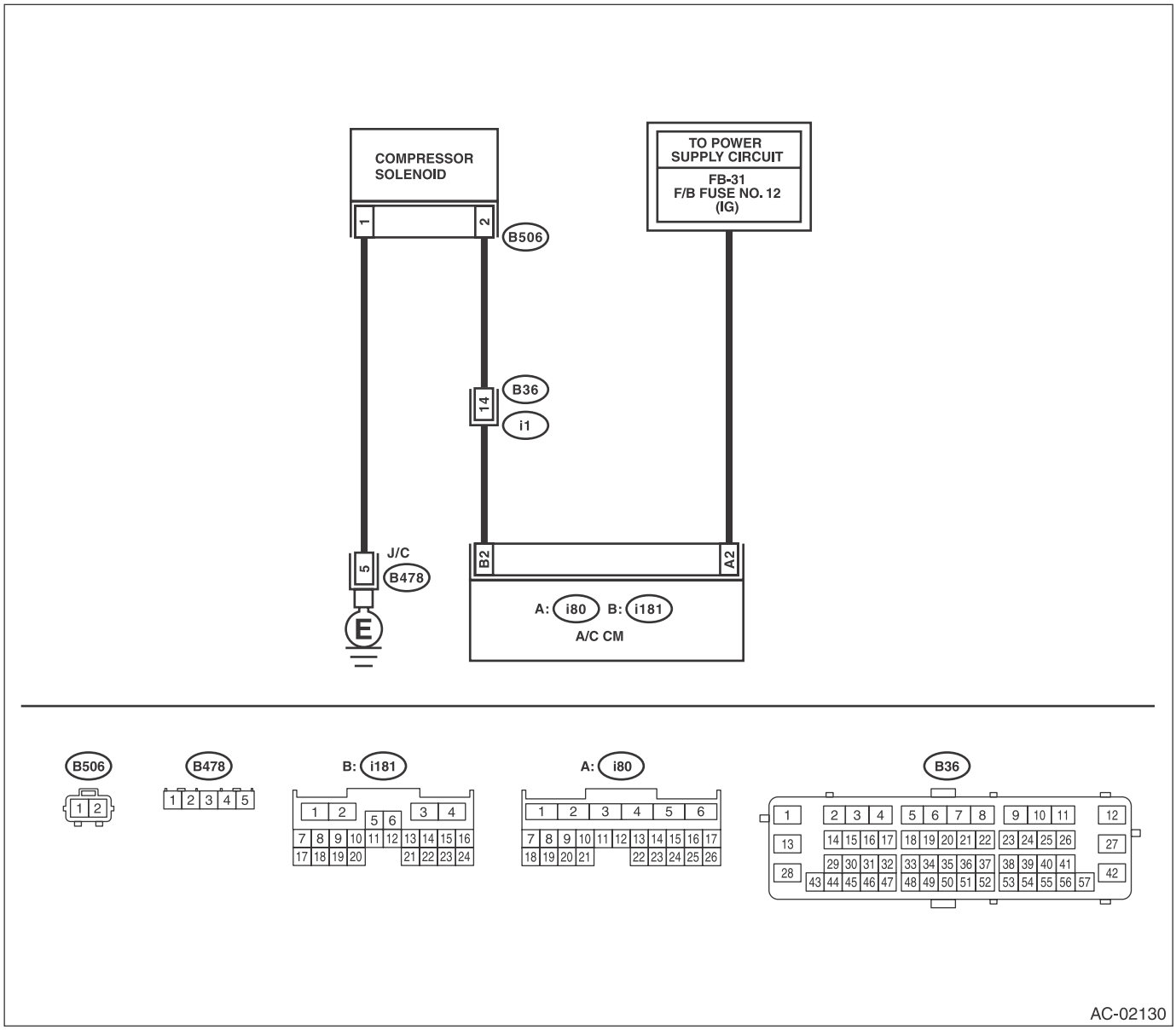

Step		Check	Yes	No
1	**CHECK DTC.** 1) Turn the ignition switch to ON. 2) Read the DTC of the A/C system using the Subaru Select Monitor.	Is DTC detected?	Perform the diagnosis according to DTC.	Go to step **2**.
2	**CHECK AMOUNT OF REFRIGERANT.** Check the refrigerant pressure. <Ref. to AC-17, PROCEDURE, Refrigerant Pressure with Manifold Gauge Set.>	Is the refrigerant pressure within the standard?	Go to step **3**.	Check and repair the refrigerant leakage.

	Step	Check	Yes	No
3	**CHECK POWER SUPPLY OF CONTROL MODULE.** 1) Disconnect the A/C CM connector. 2) Turn the ignition switch to ON. 3) Using a tester, measure the voltage between the connector terminal and chassis ground. ***Connector & terminal*** ***(i80) No. 2 (+) — Chassis ground (–):***	Is the voltage 10 V or more?	Go to step **4**.	Repair the defective power supply circuit.
4	**CHECK CONTROL MODULE.** 1) Disconnect the compressor solenoid connector. 2) Turn the ignition switch to ON. 3) Using the tester, measure the voltage between terminals. ***Connector & terminal*** ***(i81) No. 2 — Chassis ground:***	Is the voltage 10 V or more?	Go to step **5**.	Repair the defective harness.
5	**CHECK HARNESS.** 1) Disconnect the A/C CM connector. 2) Using a tester, check continuity between terminals. ***Connector & terminal*** ***(B506) No. 2 — (i181) No. 2:***	Is there continuity?	Go to step **6**.	Repair or replace the open circuit.
6	**CHECK GROUND.** Using a tester, check the continuity between the connector terminal and chassis ground. ***Connector & terminal*** ***(B506) No. 1 — Chassis ground:***	Is there continuity?	Check the compressor solenoid.	Repair or replace the open circuit.

7. Diagnostic Procedure for Sensors

A: AMBIENT SENSOR

WIRING DIAGRAM:

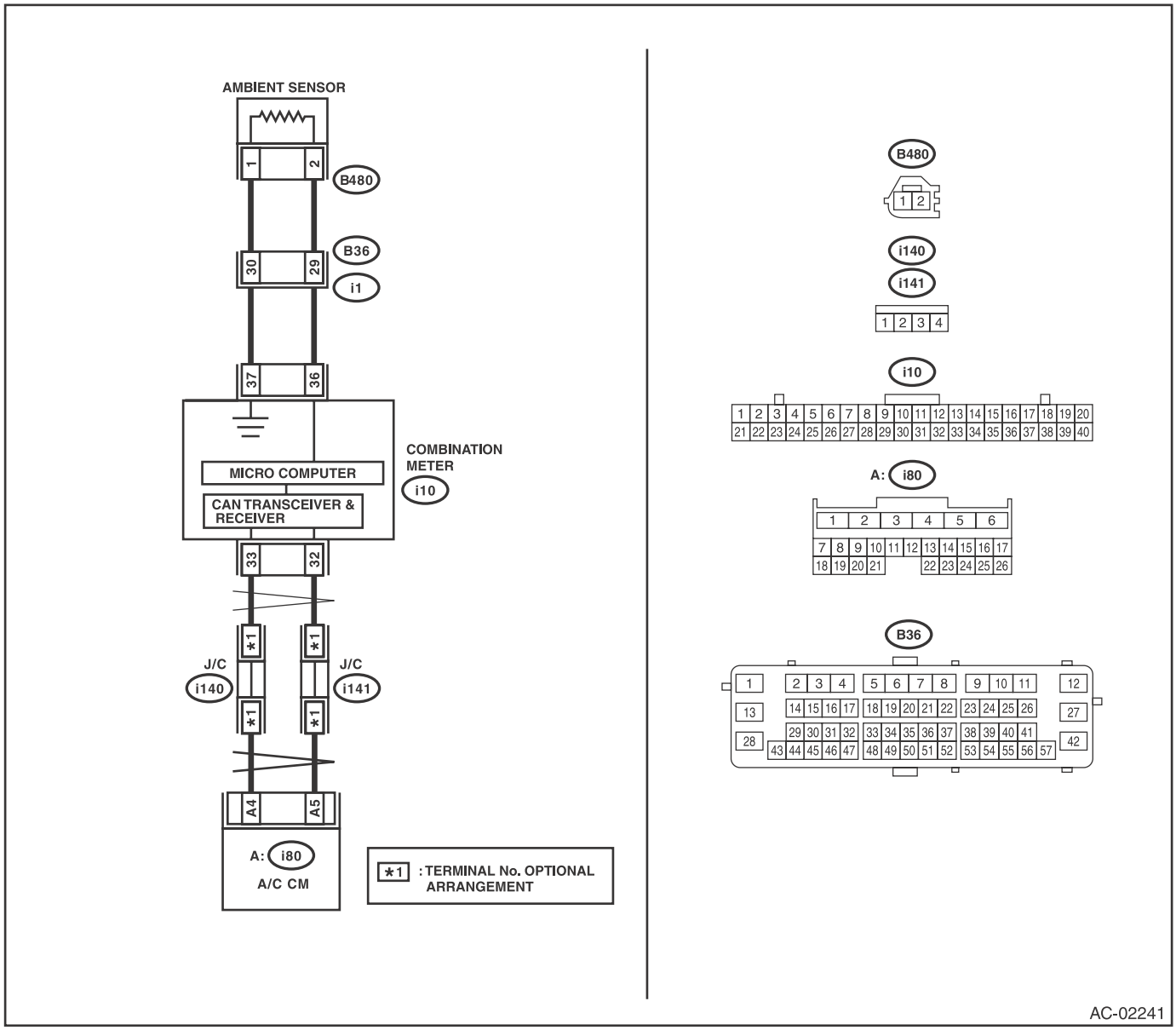

Step		Check	Yes	No
1	**CHECK AMBIENT SENSOR.** 1) Turn the ignition switch to OFF. 2) Disconnect the connector from ambient sensor. 3) Measure the resistance between terminals of ambient sensor. ***Terminals*** ***No. 1 — No. 2:***	Is the resistance approximately 2.2 kΩ at 25°C (77°F)?	Go to step **2**.	Replace the ambient sensor. <Ref. to AC-68, REMOVAL, Ambient Sensor (Auto A/C Model).>

	Step	Check	Yes	No
2	**CHECK INPUT SIGNAL FOR AMBIENT SENSOR.** 1) Turn the ignition to ON. 2) Measure the voltage between connector (F138) terminals. ***Connector & terminal*** ***(F138) No. 1 (+) — No. 2 (–):***	Is the voltage approx. 5 V?	Go to step **6**.	Go to step **3**.
3	**CHECK COMBINATION METER OUTPUT SIGNAL.** 1) Turn the ignition switch to OFF. 2) Pull out the combination meter. 3) Disconnect the connector from ambient sensor. 4) Turn the ignition switch to ON. 5) Measure the voltage between the combination meter connector terminals. ***Connector & terminal*** ***(i10) No. 36 (+) — No. 37 (–):***	Is the voltage approx. 5 V?	Go to step **4**.	Go to step **6**.
4	**CHECK HARNESS CONNECTOR BETWEEN COMBINATION METER AND AMBIENT SENSOR.** 1) Turn the ignition switch to OFF. 2) Disconnect the connector from the combination meter. 3) Measure the resistance of harness between combination meter and ambient sensor. ***Connector & terminal*** ***(F138) No. 2 — (i10) No. 36:***	Is the resistance less than 10 Ω?	Go to step **5**.	Repair the open circuit of the harness between the combination meter and ambient sensor.
5	**CHECK HARNESS CONNECTOR BETWEEN COMBINATION METER AND AMBIENT SENSOR.** Measure the resistance of harness between combination meter and ambient sensor. ***Connector & terminal*** ***(F138) No. 2 — (i10) No. 36:*** ***(F138) No. 1 — (i10) No. 37:***	Is the resistance less than 1 Ω?	Go to step **6**.	Repair the open circuit of the harness between the combination meter and ambient sensor.
6	**CHECK DTC.** 1) Connect the disconnected connectors. 2) Read the DTC of the CAN system using the Subaru Select Monitor.	Is DTC for CAN system displayed?	Perform the diagnosis according to DTC. <Ref. to LAN(diag)-31, List of Diagnostic Trouble Code (DTC).>	Go to step **7**.
7	**CHECK CAN COMMUNICATION CIRCUIT.** Check the CAN communication circuit. <Ref. to LAN(diag)-12, CAN Communication Circuit Check.>	Is the CAN communication circuit normal?	Go to step **8**.	Repair the CAN communication circuit. <Ref. to LAN(diag)-4, LAN SYSTEM, CAUTION, General Description.>
8	**CHECK FOR POOR CONTACT.** Check poor contact of A/C CM connector.	Is there poor contact of connector?	Repair the connector.	Replace the A/C CM. <Ref. to AC-46, REMOVAL, Control Unit.>

8. Subaru Select Monitor

A: OPERATION

For details of basic operations, refer to “PC application help for Subaru Select Monitor”.

9. Read Diagnostic Trouble Code (DTC)

A: OPERATION

For details of operation procedures, refer to “PC application help for Subaru Select Monitor”.

10.Clear Memory Mode

A: OPERATION

For details of operation procedures, refer to “PC application help for Subaru Select Monitor”.

11.Read Current Data

A: OPERATION

For details of operation procedures, refer to “PC application help for Subaru Select Monitor”.

B: LIST

Display item	Unit of measure	Description	Reference
Trouble Code	—	DTC recorded in A/C CM	—
Engine Speed	rpm	Data value received by CAN	—
Heater Control Panel Setting Value (Driver’s)	LO: 18°C (64°F) HI: 32°C (90°F)	Control panel display value	—
Heater Control Panel Setting Value (Passenger’s)	LO: 18°C (64°F) HI: 32°C (90°F)	Control panel display value	—
Blower outlet Door Request Temperature	°C (°F)	A/C CM internal setting value	—
Blower outlet request temperature (Driver’s)	°C (°F)	A/C CM internal setting value	—
Blower outlet request temperature (Passenger’s)	°C (°F)	A/C CM internal setting value	—
Blower Fan Operating Condition	MANU/AUTO	A/C CM input value	—
A/C Operating Condition	MANU/AUTO	A/C CM input value	—
Fresh/Recircle Air Operating Condition	MANU/AUTO	A/C CM input value	—
Mode Operating Condition	MANU/AUTO	A/C CM input value	—
Rear Defogger	ON/OFF	A/C CM input value	—
In-vehicle Sensor Temperature	°C (°F)	A/C CM input value	—
Evaporator Temp.	°C (°F)	A/C CM input value	—
Quantity of Sunload	W/m^2	A/C CM input value	—
Refrigerant Pressure	MPa	A/C CM input value	—
Refrigerant Flow	kg/h	A/C CM input value	—
Airmix Door Actuator Position (Driver’s)	%	A/C CM input value	—
Airmix Door Actuator Position (Passenger’s)	%	A/C CM input value	—
Fresh/Recircle Air Door Actuator Position	%	A/C CM input value	—
Mode Door Actuator Position	%	A/C CM input value	—
Heater Water Temperature	°C (°F)	Data value received by CAN	—
Ambient Air Temperature	°C (°F)	Data value received by CAN	—
Vehicle Speed	km/h	Data value received by CAN	—
Accel. Opening Angle	%	Data value received by CAN	—
Airmix Actuator Position Target (Driver’s)	%	A/C CM input value	—
Airmix Actuator Position Target (Passenger’s)	%	A/C CM input value	—
Fresh/Recircle Air Door Actuator Position Target	%	A/C CM input value	—
Mode Door Actuator Position Target	%	A/C CM input value	—
Blower Fan Level	Level	A/C CM output value	—
Variable Flow Change Solenoid Duty	%	A/C CM output value	—
Evaporator Temperature Target	°C (°F)	A/C CM input value	—
Variable Load Compressor Torque Value	Nm	A/C CM input value	—
Request idle engine speed	rpm	A/C CM output value	—

Display item	Unit of measure	Description	Reference
Request engine speed	0: No request 1: Cooling H 2: Heating H 3: Cooling L 4: Heating L	A/C CM output value	—
Discharge pressure	MPa	A/C CM input value	—
Intake pressure	MPa	A/C CM input value	—
Cooler request distinction	No request/Request	A/C CM output value	—
Heater request distinction	No request/Request	A/C CM output value	—
Break-in variable compressor drive, finish status	Not completed/Completed	A/C CM input value	—

NOTE:
For detailed operation procedures, refer to “PC application help for Subaru Select Monitor”.

12.Diagnostic Procedure for Subaru Select Monitor Communication

A: COMMUNICATION FOR INITIALIZING IMPOSSIBLE

DIAGNOSIS:
Defective CAN communication circuit
TROUBLE SYMPTOM:
- LAN system is abnormal.
- Communication failure between Subaru Select Monitor and A/C CM

	Step	Check	Yes	No
1	**CHECK POWER SUPPLY CIRCUIT.** Connect SDI (Subaru Diagnosis Interface) to the data link connector.	Is SDI powered on?	Go to step **4**.	Go to step **2**.
2	**CHECK POWER SUPPLY CIRCUIT..** Measure the voltage between data link connector and chassis ground. ***Connector & terminal*** ***(B40) No. 16 (+) — Chassis ground (–):***	Is the voltage 10 V or more?	Go to step **3**.	Repair the power supply circuit. NOTE: In this case, repair the following items: • Open or short circuit in the harness between the battery and data link connector • Blown out of fuse (M/B No. 13)
3	**CHECK HARNESS BETWEEN DATA LINK CONNECTOR AND CHASSIS GROUND.** 1) Turn the ignition switch to OFF. 2) Measure the resistance of harness between data link connector and chassis ground. ***Connector & terminal*** ***(B40) No. 4 — Chassis ground:*** ***(B40) No. 5 — Chassis ground:***	Is the resistance less than 5 Ω?	Repair the poor contact of data link connector.	Repair the harness and connector.
4	**CHECK SUBARU SELECT MONITOR.** 1) Connect the Subaru Select Monitor to a normal vehicle. 2) Start the engine and perform communication between the Subaru Select Monitor and vehicle.	Is communication possible?	Go to step **5**.	Use another Subaru Select Monitor because the CAN communication circuit of the Subaru Select Monitor is faulty.
5	**CHECK CAN COMMUNICATION CIRCUIT.** Check the CAN communication circuit. <Ref. to LAN(diag)-10, OPERATION, Read Diagnostic Trouble Code (DTC).>	Is the CAN communication circuit normal?	Check the connection between the data link connector and Subaru Select Monitor.	Repair the CAN communication circuit.

13.List of Diagnostic Trouble Code (DTC)

A: LIST

DTC	Contents	Content of diagnosis	Index
B1601	In-Vehicle Sensor Short	In-vehicle air temperature sensor circuit is shorted.	<Ref. to AC(diag)-33, DTC B1601 IN-VEHICLE SENSOR SHORT, Diagnostic Procedure with Diagnostic Trouble Code (DTC).>
B1602	In-Vehicle Sensor Open	In-vehicle air temperature sensor circuit is open.	<Ref. to AC(diag)-34, DTC B1602 IN-VEHICLE SENSOR OPEN, Diagnostic Procedure with Diagnostic Trouble Code (DTC).>
B1603	Evaporator Sensor Circuit Short	Evaporator sensor circuit is shorted.	<Ref. to AC(diag)-35, DTC B1603 EVAPORATOR SENSOR SHORT, Diagnostic Procedure with Diagnostic Trouble Code (DTC).>
B1604	Evaporator Sensor Circuit Open	Evaporator sensor circuit is open.	<Ref. to AC(diag)-36, DTC B1604 EVAPORATOR SENSOR OPEN, Diagnostic Procedure with Diagnostic Trouble Code (DTC).>
B1605	Refrigerant Pressure Sensor Circuit Open	Pressure sensor circuit is open.	Displays current malfunction only. <Ref. to AC(diag)-37, DTC B1605 REFRIGERANT PRESSURE SENSOR CIRCUIT OPEN, Diagnostic Procedure with Diagnostic Trouble Code (DTC).>
B1606	Refrigerant Pressure Sensor Circuit Short	Pressure sensor circuit is shorted.	Displays current malfunction only. <Ref. to AC(diag)-38, DTC B1606 REFRIGERANT PRESSURE SENSOR CIRCUIT SHORT, Diagnostic Procedure with Diagnostic Trouble Code (DTC).>
B1607	Sunload Sensor Short	• Sunload sensor circuit is shorted. • No sunload	<Ref. to AC(diag)-39, DTC B1607 SUNLOAD SENSOR SHORT, Diagnostic Procedure with Diagnostic Trouble Code (DTC).>
B1608	Sunload Sensor Open	Sunload sensor circuit is open.	<Ref. to AC(diag)-40, DTC B1608 SUNLOAD SENSOR OPEN, Diagnostic Procedure with Diagnostic Trouble Code (DTC).>
B1610	Airmix Door Actuator Potentiometer Circuit Open (Driver's)	Airmix door actuator — potentiometer circuit is open.	<Ref. to AC(diag)-42, DTC B1610 AIRMIX DOOR ACTUATOR POTENTIOMETER CIRCUIT OPEN (DRIVER'S), Diagnostic Procedure with Diagnostic Trouble Code (DTC).>
B1611	Airmix Door Actuator Potentiometer Circuit Short (Driver's)	Airmix door actuator — potentiometer circuit is shorted.	<Ref. to AC(diag)-44, DTC B1611 AIRMIX DOOR ACTUATOR POTENTIOMETER CIRCUIT SHORT (DRIVER'S), Diagnostic Procedure with Diagnostic Trouble Code (DTC).>
B1612	Airmix Door Actuator Lock (Driver's)	Mode door actuator is locked.	<Ref. to AC(diag)-46, DTC B1612 AIRMIX DOOR ACTUATOR LOCK (DRIVER'S), Diagnostic Procedure with Diagnostic Trouble Code (DTC).>
B1613	Airmix Door Actuator Potentiometer Circuit Open (Passenger's)	Airmix door actuator — potentiometer circuit is open.	<Ref. to AC(diag)-48, DTC B1613 AIRMIX DOOR ACTUATOR POTENTIOMETER CIRCUIT OPEN (PASSENGER'S), Diagnostic Procedure with Diagnostic Trouble Code (DTC).>
B1614	Airmix Door Actuator Potentiometer Circuit Short (Passenger's)	Airmix door actuator — potentiometer circuit is shorted.	<Ref. to AC(diag)-50, DTC B1614 AIRMIX DOOR ACTUATOR POTENTIOMETER CIRCUIT SHORT (PASSENGER'S), Diagnostic Procedure with Diagnostic Trouble Code (DTC).>
B1615	Airmix Door Actuator Lock (Passenger's)	Mode door actuator is locked.	<Ref. to AC(diag)-52, DTC B1615 AIRMIX DOOR ACTUATOR LOCK (PASSENGER'S), Diagnostic Procedure with Diagnostic Trouble Code (DTC).>

DTC	Contents	Content of diagnosis	Index
B1620	Mode Door Actuator Potentiometer Circuit Open	Mode door actuator — potentiometer circuit is open.	<Ref. to AC(diag)-54, DTC B1620 MODE DOOR ACTUATOR POTENTIOMETER CIRCUIT OPEN, Diagnostic Procedure with Diagnostic Trouble Code (DTC).>
B1621	Mode Door Actuator Potentiometer Circuit Short	Mode door actuator — potentiometer circuit is shorted.	<Ref. to AC(diag)-56, DTC B1621 MODE DOOR ACTUATOR POTENTIOMETER CIRCUIT SHORT, Diagnostic Procedure with Diagnostic Trouble Code (DTC).>
B1622	Mode Door Actuator Lock	Mode door actuator is locked.	<Ref. to AC(diag)-58, DTC B1622 MODE DOOR ACTUATOR LOCK, Diagnostic Procedure with Diagnostic Trouble Code (DTC).>
U0001	CAN Communication Bus Off	CAN communication bus off	Displays current malfunction only. <Ref. to AC(diag)-61, DTC U0001 CAN COMMUNICATION BUS OFF, Diagnostic Procedure with Diagnostic Trouble Code (DTC).>
U0002	CAN Communication Error	CAN communication error	Displays current malfunction only. <Ref. to AC(diag)-61, DTC U0002 CAN COMMUNICATION ERROR, Diagnostic Procedure with Diagnostic Trouble Code (DTC).>
U0028	Heater Control Panel Communication Error	Communication with heater control panel is faulty.	Displays current malfunction only. <Ref. to AC(diag)-60, DTC U0028 HEATER CONTROL PANEL COMMUNICATION ERROR, Diagnostic Procedure with Diagnostic Trouble Code (DTC).>
B1641	Refrigerant Flow Sensor Circuit Short	Refrigerant flow sensor circuit is shorted.	Displays current malfunction only. <Ref. to AC(diag)-62, DTC B1641 REFRIGERANT FLOW SENSOR CIRCUIT SHORT, Diagnostic Procedure with Diagnostic Trouble Code (DTC).>
B1642	Refrigerant Flow Sensor Circuit Open	Refrigerant flow sensor circuit is open.	Displays current malfunction only. <Ref. to AC(diag)-64, DTC B1642 REFRIGERANT FLOW SENSOR CIRCUIT OPEN, Diagnostic Procedure with Diagnostic Trouble Code (DTC).>
B1643	Variable Flow Change Solenoid Duty Circuit abnormal	Variable flow change solenoid duty circuit is open or shorted.	Displays current malfunction only. <Ref. to AC(diag)-66, DTC B1643 VARIABLE FLOW CHANGE SOLENOID DUTY CIRCUIT ABNORMAL, Diagnostic Procedure with Diagnostic Trouble Code (DTC).>
B1644	Refrigerant not sealed drive error	Compressor is rotated before filling refrigerant.	<Ref. to AC(diag)-68, DTC B1644 REFRIGERANT NOT SEALED DRIVE ERROR, Diagnostic Procedure with Diagnostic Trouble Code (DTC).>

14.Diagnostic Procedure with Diagnostic Trouble Code (DTC)

A: DTC B1601 IN-VEHICLE SENSOR SHORT

DTC DETECTING CONDITION:
In-vehicle sensor circuit is shorted.
TROUBLE SYMPTOM:
- Auto A/C does not operate. (Manual operation is possible)
- In-vehicle temperature is falsely recognized as high, and the compartment temperature is adjusted.

WIRING DIAGRAM:

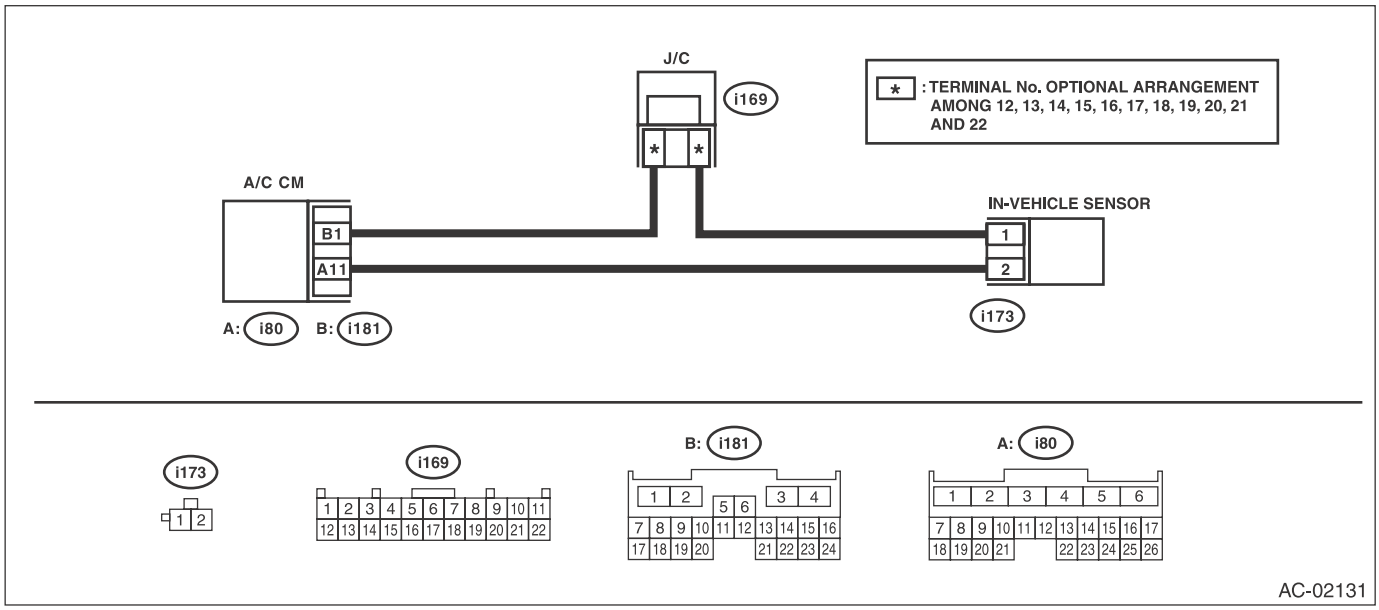

	Step	Check	Yes	No
1	**CHECK CURRENT DATA.** Using the Subaru Select Monitor, check "In-vehicle Sensor Temperature" of the current data from the A/C diagnosis.	Is the current data exceeding 25°C (77°F)?	Go to step **2**.	Check the connection of the in-vehicle sensor circuit.
2	**CHECK IN-VEHICLE SENSOR.** 1) Disconnect the in-vehicle sensor. <Ref. to AC-71, REMOVAL, In-Vehicle Sensor (Auto A/C Model).> 2) Using the Subaru Select Monitor, check "In-vehicle Sensor Temperature" of the current data from the A/C diagnosis.	Is the current data exceeding 25°C (77°F)?	Go to step **3**.	Replace the in-vehicle sensor. <Ref. to AC-71, REMOVAL, In-Vehicle Sensor (Auto A/C Model).>
3	**CHECK HARNESS.** 1) Turn the ignition switch to ON. 2) Using the tester, measure the voltage between terminals. ***Connector & terminal (i173) No. 1 — No. 2:***	Is the voltage 4.5 — 5.0 V?	Check the connection of the in-vehicle sensor circuit.	Go to step **4**.
4	**CHECK HARNESS.** 1) Disconnect the connector from A/C CM. 2) Using a tester, check continuity between terminals. ***Connector & terminal (i173) No. 1 — No. 2:***	Is there continuity?	Repair or replace the short circuit of the harness.	Replace the A/C CM. <Ref. to AC-46, REMOVAL, Control Unit.>

B: DTC B1602 IN-VEHICLE SENSOR OPEN

DTC DETECTING CONDITION:
In-vehicle sensor circuit is open.

TROUBLE SYMPTOM:
In-vehicle air temperature is falsely recognized as 25°C (77°F), and the compartment temperature is adjusted.

WIRING DIAGRAM:

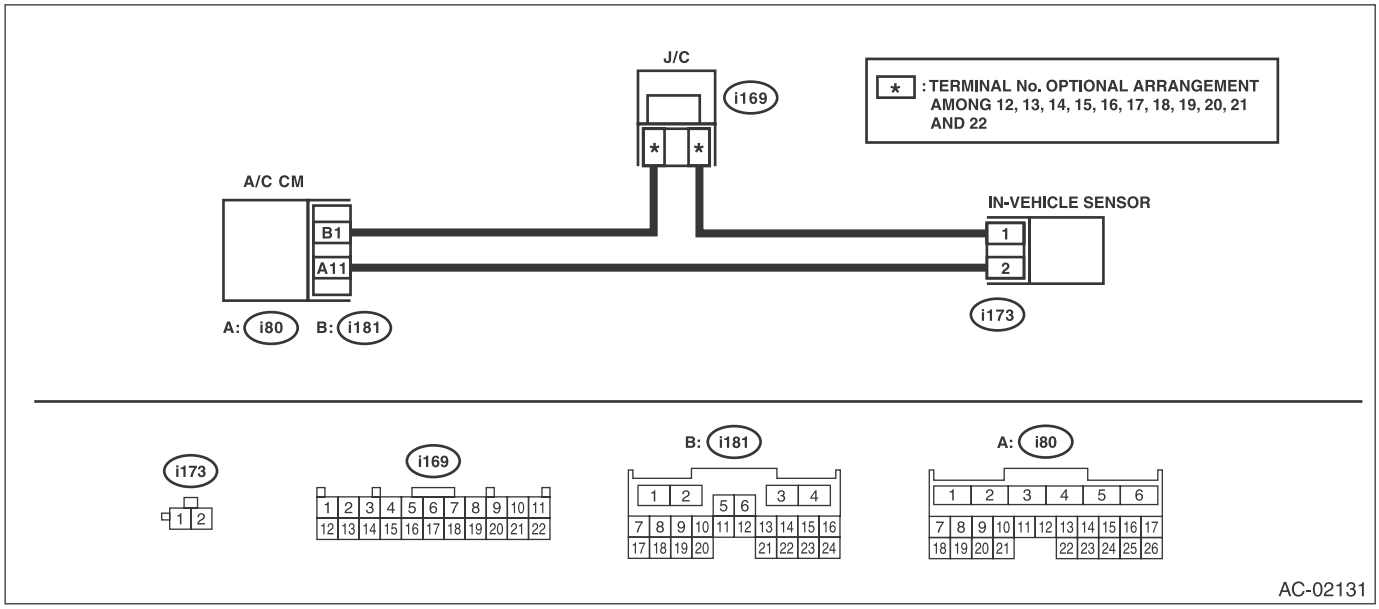

Step		Check	Yes	No
1	**CHECK CURRENT DATA.** Using the Subaru Select Monitor, check "In-vehicle Sensor Temperature" of the current data from the A/C diagnosis.	Does the current data display 25°C (77°F)?	Go to step **2**.	Check the connection of the in-vehicle sensor circuit.
2	**CHECK IN-VEHICLE SENSOR.** 1) Disconnect the in-vehicle sensor. 2) Short the i173 connector. 3) Using the Subaru Select Monitor, check "In-vehicle Sensor Temperature" of the current data from the A/C diagnosis.	Does the current data display 25°C (77°F)?	Go to step **3**.	Replace the in-vehicle sensor. <Ref. to AC-71, REMOVAL, In-Vehicle Sensor (Auto A/C Model).>
3	**CHECK HARNESS.** 1) Turn the ignition switch to ON. 2) Using the tester, measure the voltage between terminals. ***Connector & terminal*** ***(i173) No. 1 — No. 2:***	Is the voltage 4.5 — 5.0 V?	Go to step **4**.	Repair or replace the open circuit of harness.
4	**CHECK HARNESS.** 1) Disconnect the connector from A/C CM. 2) Using a tester, check continuity between terminals. ***Connector & terminal*** ***(i173) No. 1 — (i81) No. 1:*** ***(i173) No. 2 — (i80) No. 11:***	Is there continuity?	Replace the A/C CM. <Ref. to AC-46, REMOVAL, Control Unit.>	Repair or replace the open circuit of harness.

C: DTC B1603 EVAPORATOR SENSOR SHORT

DTC DETECTING CONDITION:

Evaporator sensor circuit is shorted.

TROUBLE SYMPTOM:

- Compressor does not operate.
- Evaporator temperature is falsely recognized as high, and the compartment temperature is adjusted.

WIRING DIAGRAM:

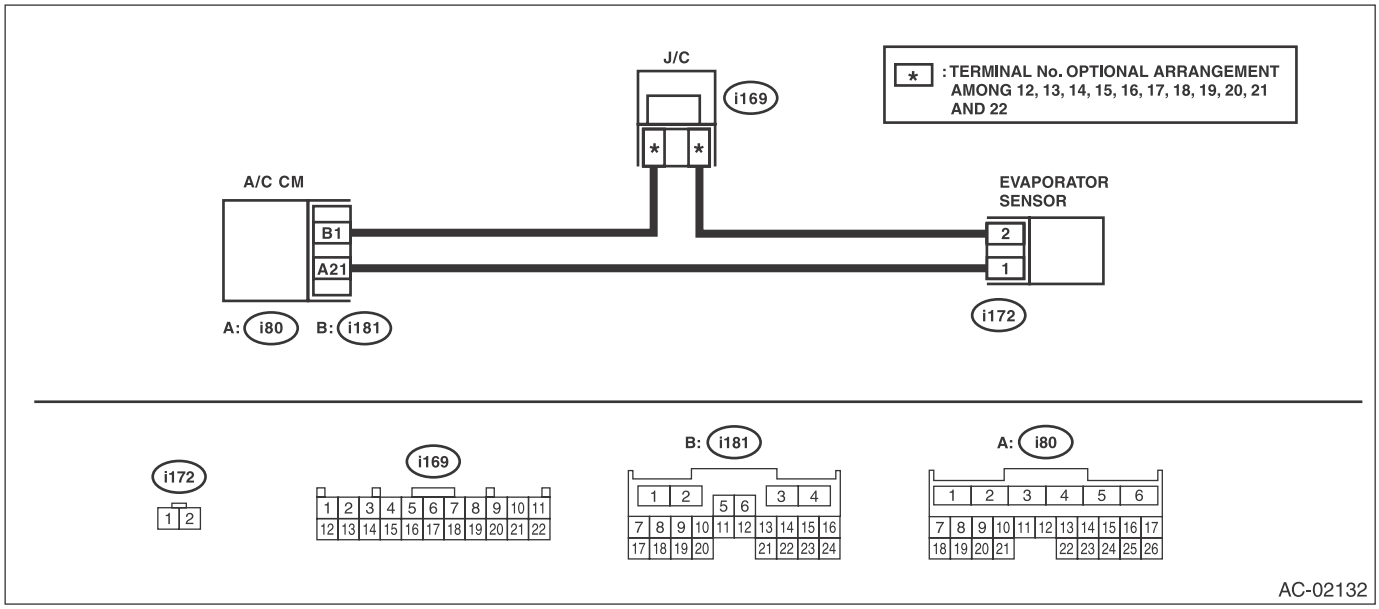

	Step	Check	Yes	No
1	**CHECK CURRENT DATA.** Using the Subaru Select Monitor, check "Evaporator Temperature" of the current data from the A/C diagnosis.	Is the current data exceeding 50°C (90°F)?	Go to step **2**.	Check the connection of the evaporator sensor circuit.
2	**CHECK EVAPORATOR SENSOR.** 1) Disconnect the evaporator sensor. 2) Using the Subaru Select Monitor, check "Evaporator Temperature" of the current data from the A/C diagnosis.	Is the current data exceeding 50°C (90°F)?	Go to step **3**.	Replace the evaporator sensor. <Ref. to AC-57, REMOVAL, Evaporator.>
3	**CHECK HARNESS.** 1) Turn the ignition switch to ON. 2) Using the tester, measure the voltage between terminals. ***Connector & terminal*** ***(i172) No. 1 — No. 2:***	Is the voltage 4.5 — 5.0 V?	Check the connection of the evaporator sensor circuit.	Go to step **4**.
4	**CHECK HARNESS.** 1) Disconnect the connector from A/C CM. 2) Using a tester, check continuity between terminals. ***Connector & terminal*** ***(i172) No. 1 — No. 2:***	Is there continuity?	Repair or replace the short circuit of the harness.	Replace the A/C CM. <Ref. to AC-46, REMOVAL, Control Unit.>

D: DTC B1604 EVAPORATOR SENSOR OPEN

DTC DETECTING CONDITION:
Evaporator sensor circuit is open.
TROUBLE SYMPTOM:
Compressor does not operate.
WIRING DIAGRAM:

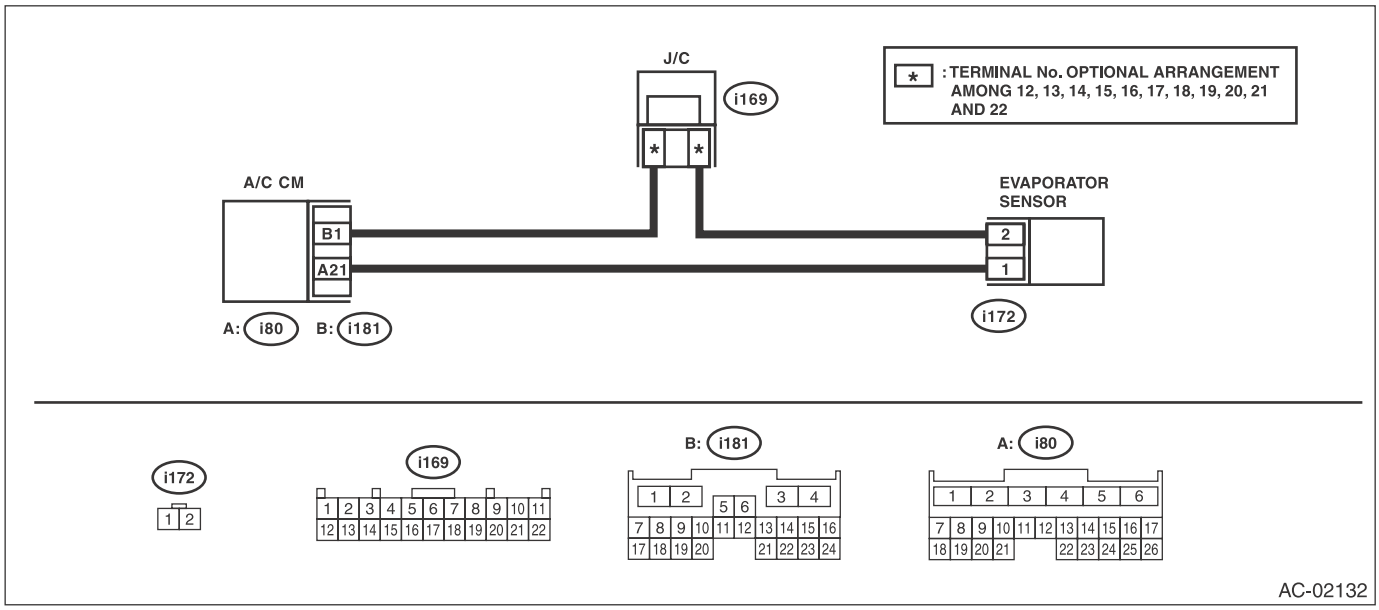

Step		Check	Yes	No
1	**CHECK CURRENT DATA.** Using the Subaru Select Monitor, check "Evaporator Temperature" of the current data from the A/C diagnosis.	Is the current data lower than –30°C (–54°F)?	Go to step **2**.	Check the connection of the evaporator sensor circuit.
2	**CHECK EVAPORATOR SENSOR.** 1) Disconnect the evaporator sensor. 2) Short the i172 connector. 3) Using the Subaru Select Monitor, check "Evaporator Temperature" of the current data from the A/C diagnosis.	Is the current data lower than –30°C (–54°F)?	Go to step **3**.	Replace the evaporator sensor. <Ref. to AC-57, REMOVAL, Evaporator.>
3	**CHECK HARNESS.** 1) Turn the ignition switch to ON. 2) Using the tester, measure the voltage between terminals. ***Connector & terminal*** ***(i172) No. 1 — No. 2:***	Is the voltage 4.5 — 5.0 V?	Check the connection of the evaporator sensor circuit.	Go to step **4**.
4	**CHECK HARNESS.** 1) Disconnect the connector from A/C CM. 2) Using a tester, check continuity between terminals. ***Connector & terminal*** ***(i172) No. 1 — (i80) No. 21:*** ***(i172) No. 2 — (i81) No. 1:***	Is there continuity?	Replace the A/C CM. <Ref. to AC-46, REMOVAL, Control Unit.>	Repair or replace the open circuit of harness.

E: DTC B1605 REFRIGERANT PRESSURE SENSOR CIRCUIT OPEN

DTC DETECTING CONDITION:
Refrigerant pressure sensor circuit is open.
TROUBLE SYMPTOM:
Compressor does not operate.
WIRING DIAGRAM:

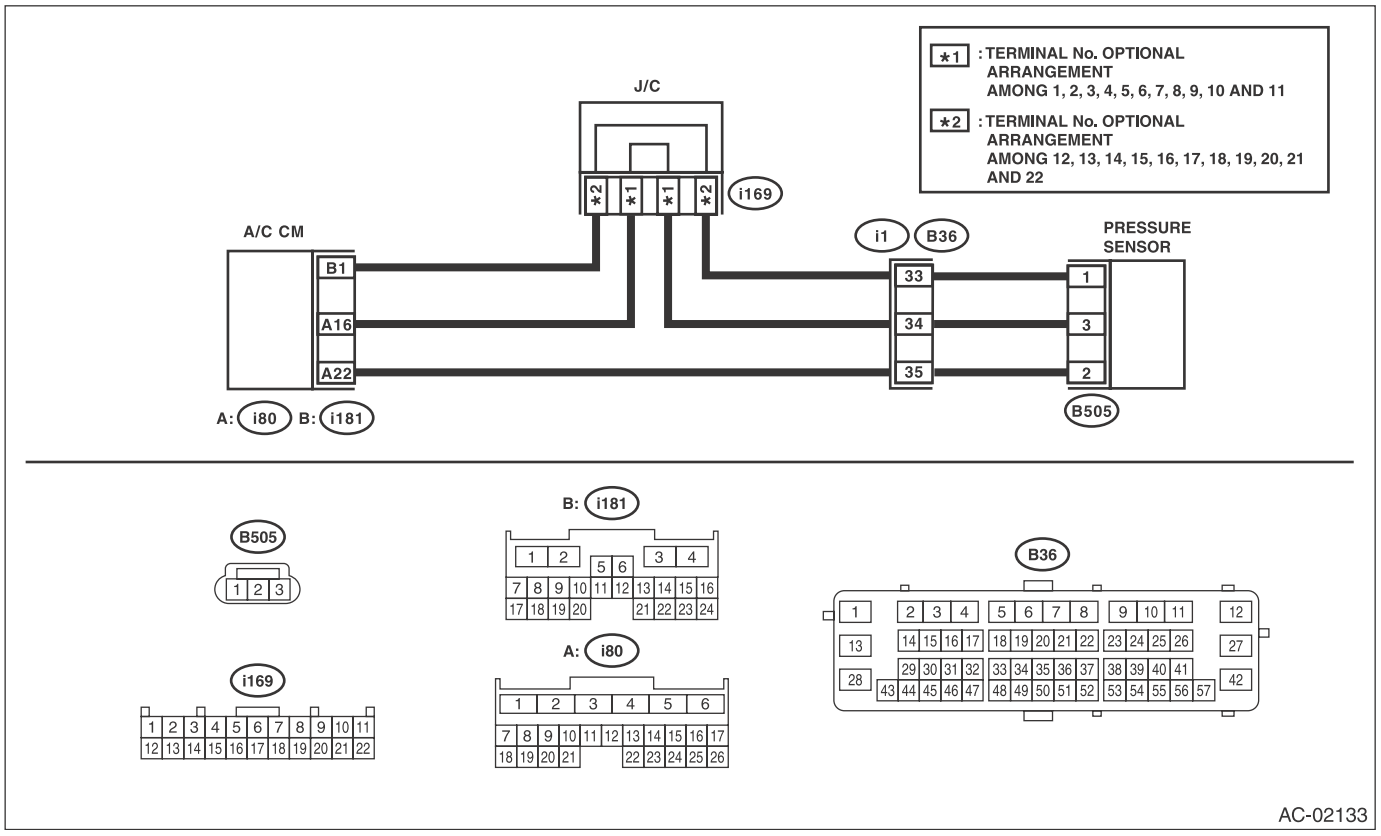

Step		Check	Yes	No
1	**CHECK CURRENT DATA.** Using the Subaru Select Monitor, check "Refrigerant Pressure" of the current data from the A/C diagnosis.	Does the current data display 3.19 MPa?	Go to step **2**.	Check the connection of the refrigerant pressure sensor circuit.
2	**CHECK PRESSURE SENSOR.** 1) Disconnect the pressure sensor. 2) Short No. 2 and No. 3 of B505 connector. 3) Using the Subaru Select Monitor, check "Refrigerant Pressure" of the current data from the A/C diagnosis.	Does the current data display 3.19 MPa?	Go to step **3**.	Replace the refrigerant pressure sensor. <Ref. to AC-57, REMOVAL, Evaporator.>
3	**CHECK HARNESS.** 1) Turn the ignition switch to ON. 2) Using the tester, measure the voltage between terminals. ***Connector & terminal*** ***(B505) No. 1 — No. 3:***	Is the voltage 4.5 — 5.0 V?	Go to step **4**.	Repair or replace the open circuit of harness.
4	**CHECK HARNESS.** 1) Disconnect the connector from A/C CM. 2) Using a tester, check continuity between terminals. ***Connector & terminal*** ***(B505) No. 1 — (i81) No. 1:*** ***(B505) No. 2 — (i80) No. 22:*** ***(B505) No. 3 — (i80) No. 16:***	Is there continuity?	Replace the A/C CM. <Ref. to AC-46, REMOVAL, Control Unit.>	Repair or replace the open circuit of harness.

F: DTC B1606 REFRIGERANT PRESSURE SENSOR CIRCUIT SHORT

DTC DETECTING CONDITION:
Refrigerant pressure sensor circuit is shorted.
TROUBLE SYMPTOM:
Compressor does not operate.
WIRING DIAGRAM:

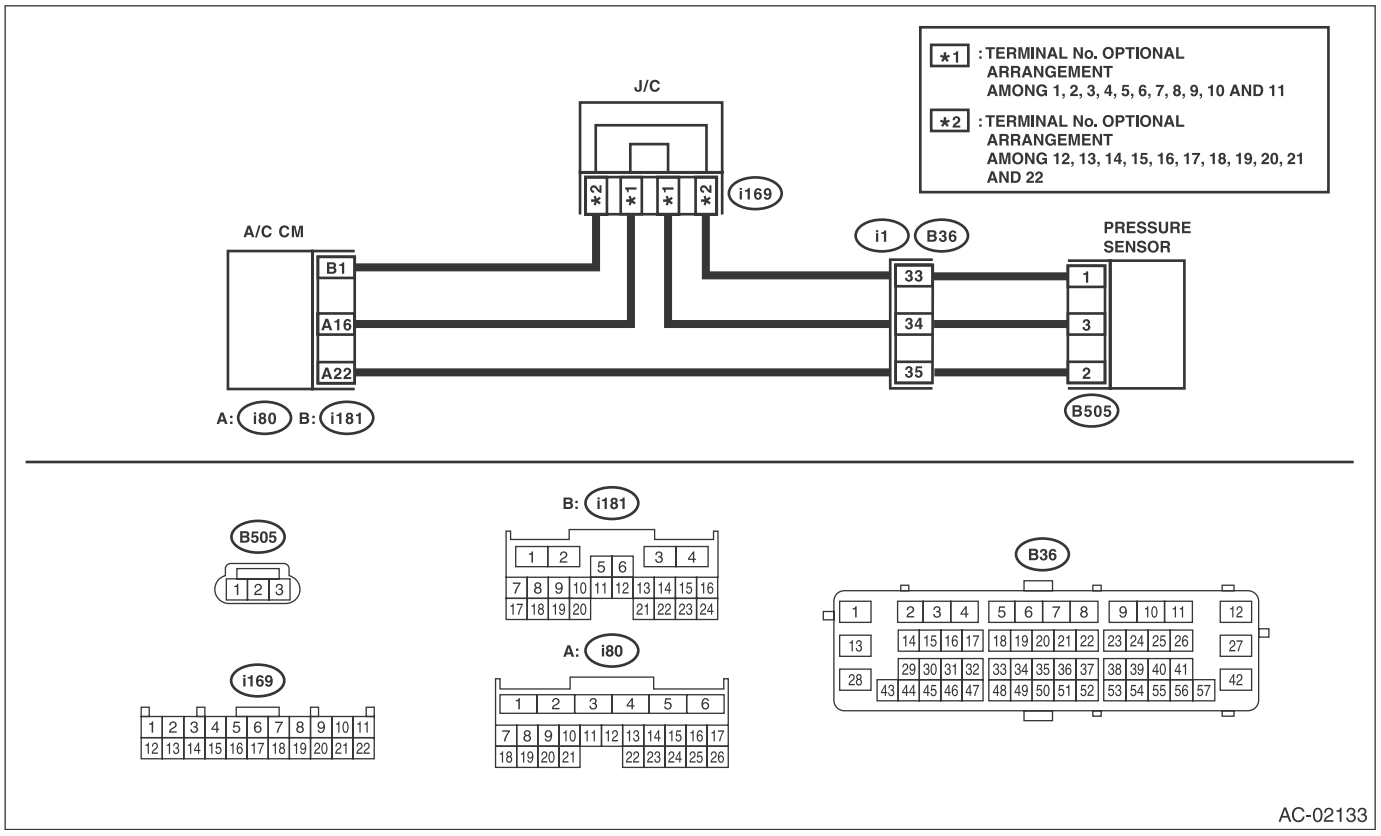

Step		Check	Yes	No
1	**CHECK CURRENT DATA.** Using the Subaru Select Monitor, check "Refrigerant Pressure" of the current data from the A/C diagnosis.	Does the current data display 0 MPa?	Go to step **2**.	Check the connection of the refrigerant pressure sensor.
2	**CHECK REFRIGERANT PRESSURE SENSOR.** 1) Disconnect the refrigerant pressure sensor. 2) Using the Subaru Select Monitor, check "Refrigerant Pressure" of the current data from the A/C diagnosis.	Does the current data display 0 MPa?	Go to step **3**.	Replace the refrigerant pressure sensor. <Ref. to AC-57, REMOVAL, Evaporator.>
3	**CHECK HARNESS.** 1) Turn the ignition switch to ON. 2) Using the tester, measure the voltage between terminals. ***Connector & terminal*** ***(B505) No. 1 — No. 3:***	Is the voltage 4.5 — 5.0 V?	Go to step **4**.	Repair or replace the open circuit of harness.
4	**CHECK HARNESS.** 1) Disconnect the connector from A/C CM. 2) Using a tester, check continuity between terminals. ***Connector & terminal*** ***(B505) No. 1 — No. 2:*** ***(B505) No. 2 — No. 3:*** ***(B505) No. 3 — No. 1:***	Is there continuity?	Repair or replace the short circuit of the harness.	Replace the A/C CM. <Ref. to AC-46, REMOVAL, Control Unit.>

G: DTC B1607 SUNLOAD SENSOR SHORT

DTC DETECTING CONDITION:
Sunload sensor circuit is shorted.
TROUBLE SYMPTOM:
Control is performed as no sunload.
WIRING DIAGRAM:

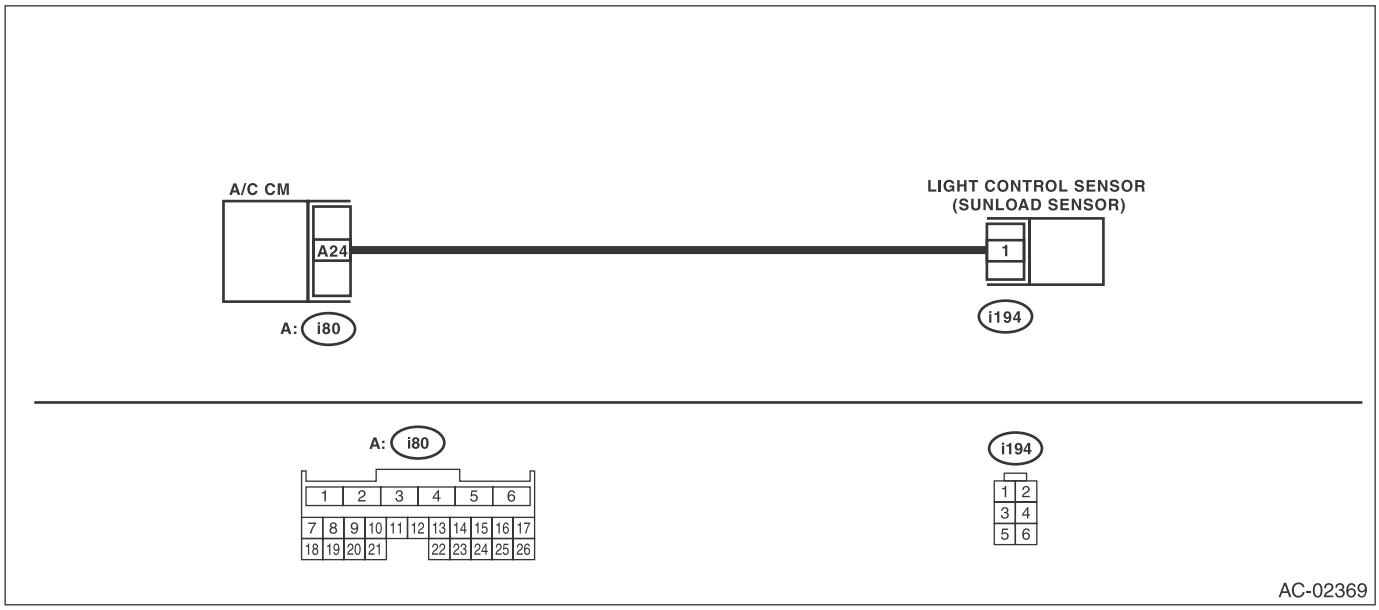

Step		Check	Yes	No
1	**CHECK CURRENT DATA.** Using the Subaru Select Monitor, check "Quantity of Sunload" of the current data from the A/C diagnosis.	Does the current data display 0 W/m^2?	Go to step **2**.	Check the connection of the sunload sensor circuit.
2	**CHECK SUNLOAD SENSOR.** 1) Disconnect the sunload sensor. 2) Short the i194 connector to chassis ground. 3) Using the Subaru Select Monitor, check "Quantity of Sunload" of the current data from the A/C diagnosis.	Does the current data display 0 W/m^2?	Go to step **3**.	Replace the sunload sensor. <Ref. to AC-57, REMOVAL, Evaporator.>
3	**CHECK HARNESS.** 1) Turn the ignition switch to ON. 2) Using the tester, measure the voltage between terminals. ***Connector & terminal*** ***(i194) No. 1 — Chassis ground:***	Is the voltage 4.5 — 5.0 V?	Check the connection of the sunload sensor circuit.	Go to step **4**.
4	**CHECK HARNESS.** 1) Disconnect the connector from A/C CM. 2) Using a tester, check continuity between terminals. ***Connector & terminal*** ***(i194) No. 1 — Chassis ground:***	Is there continuity?	Repair or replace the short circuit of the harness.	Replace the A/C CM. <Ref. to AC-46, REMOVAL, Control Unit.>

H: DTC B1608 SUNLOAD SENSOR OPEN

DTC DETECTING CONDITION:
Sunload sensor circuit is open. (Displayed for current malfunction)

NOTE:
When the sunload sensor check is performed indoors or in the shade, it could be diagnosed as having an open circuit. Always check the sunload sensor with the sun shining on it.

TROUBLE SYMPTOM:
Control is performed as no sunload.

WIRING DIAGRAM:

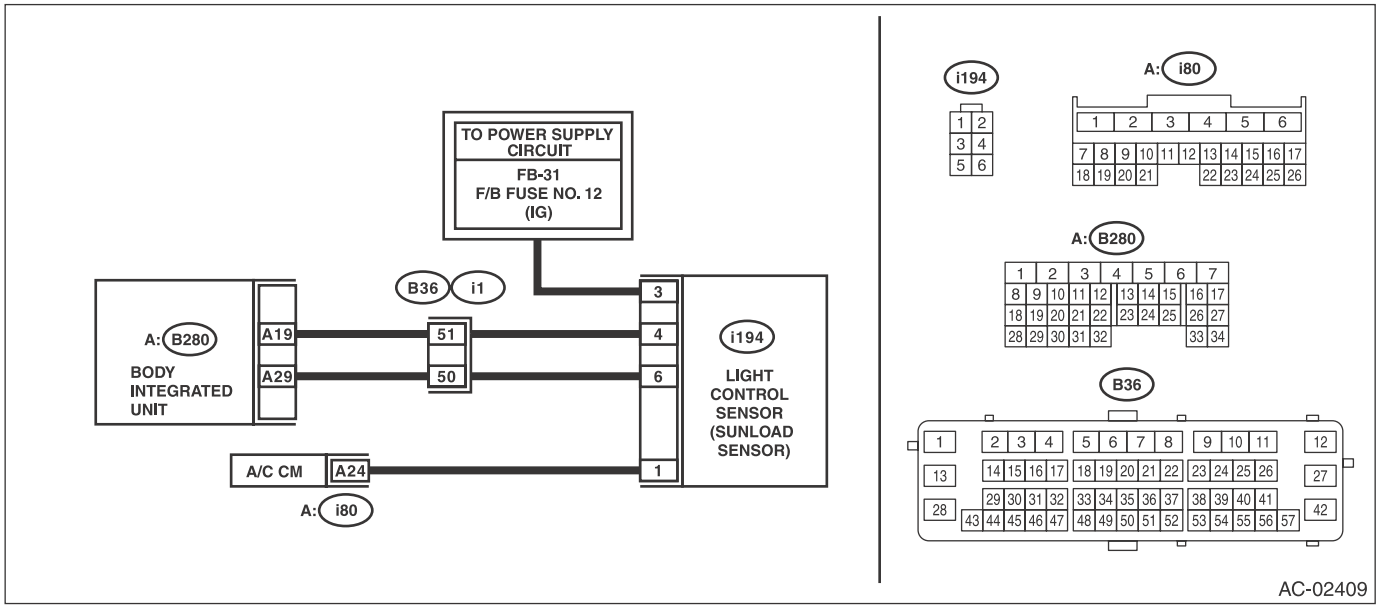

Step		Check	Yes	No
1	**CHECK CONNECTOR.** Read the DTC of the A/C CM using the Subaru Select Monitor.	Is B1608 displayed?	Go to step **2**.	Check the connection of the sunload sensor circuit.
2	**CHECK HARNESS.** 1) Disconnect the sunload sensor. 2) Using a tester, check continuity between terminals. ***Connector & terminal*** ***(i194) No. 6 — Chassis ground:***	Is there continuity?	Go to step **3**.	Repair or replace the open circuit of harness.
3	**CHECK HARNESS.** 1) Turn the ignition switch to ON. 2) Using the tester, measure the voltage between terminals. ***Connector & terminal*** ***(i194) No. 3 (+) — No. 6 (–):***	Is the voltage 10.0 — 14.0 V?	Go to step **4**.	Repair or replace the open circuit of harness.
4	**CHECK SUNLOAD SENSOR.** 1) Connect the sunload sensor. 2) Turn the ignition switch to ON. 3) Using the tester, measure the voltage between terminals. **CAUTION:** **Because the sensor may not respond if the light intensity is weak, use the incandescent light for check and bring it in 30 cm or less from the sensor to measure the voltage.** ***Connector & terminal*** ***(i194) No. 1 (+) — No. 6 (–):***	When the sunlight does not directly shine on (sensor covered with cloth): 0.8 V or less, and when the incandescent light for check is close to the sensor: 0.8 — 4.3 V±0.3 V (depending on light intensity)	Go to step **5**.	Replace the sunload sensor. <Ref. to AC-69, REMOVAL, Sunload Sensor (Auto A/C Model).>

Step		Check	Yes	No
5	**CHECK HARNESS.** 1) Disconnect the sunload sensor. 2) Disconnect the connector from A/C CM. 3) Using a tester, check continuity between terminals. ***Connector & terminal*** ***(i194) No. 1 — (i80) No. 24:***	Is there continuity?	Go to step **6**.	Repair or replace the open circuit of harness.
6	**CHECK HARNESS.** 1) Using a tester, check continuity between terminals. ***Connector & terminal*** ***(i194) No. 3 — (B280) No. 9:***	Is there continuity?	Repair or replace the open circuit of harness.	Replace the A/C CM. <Ref. to AC-46, REMOVAL, Control Unit.>

I: DTC B1610 AIRMIX DOOR ACTUATOR POTENTIOMETER CIRCUIT OPEN (DRIVER'S)

DTC DETECTING CONDITION:

Air mix door actuator — potentiometer circuit is open.

TROUBLE SYMPTOM:

- Temperature cannot be adjusted.
- Temperature of the driver's dual air conditioner cannot be adjusted.

WIRING DIAGRAM:

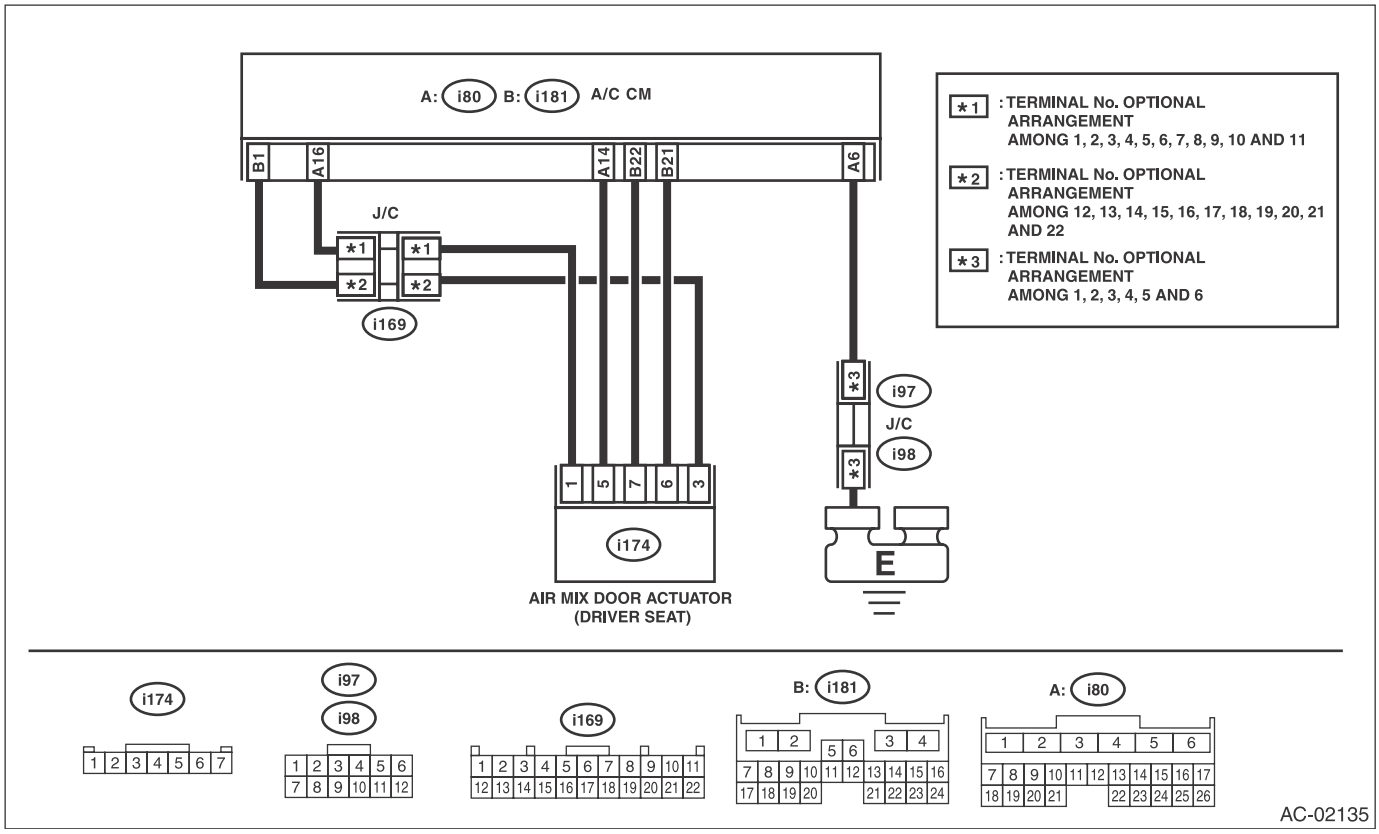

Step		Check	Yes	No
1	**CHECK CONNECTOR.** 1) Check the condition of connector connection. 2) Read the DTC of the A/C CM using the Subaru Select Monitor.	Is B1610 displayed?	Go to step **2**.	Repair poor contact of the air mix door actuator circuit.
2	**CHECK ACTUATOR.** 1) Disconnect the air mix door actuator (driver's). 2) Short No. 1 and No. 5 of i174 connector. 3) Read the DTC of the A/C CM using the Subaru Select Monitor.	Is B1611 displayed?	Replace the air mix door actuator (driver's). <Ref. to AC-54, REMOVAL, Heater and Cooling Unit.>	Go to step **3**.
3	**CHECK HARNESS.** 1) Disconnect the connector from A/C CM. 2) Using a tester, check continuity between terminals. ***Connector & terminal*** ***(i174) No. 1 — (i80) No. 16:*** ***(i174) No. 3 — (i181) No. 1:*** ***(i174) No. 5 — (i80) No. 14:***	Is there continuity?	Go to step **4**.	Repair or replace the open circuit of harness.

	Step	Check	Yes	No
4	**CHECK HARNESS.** Using a tester, check continuity between terminals. ***Connector & terminal*** ***(i174) No. 1 — (i174) No. 3:*** ***(i174) No. 3 — (i174) No. 5:*** ***(i174) No. 5 — (i174) No. 1:***	Is there continuity?	Repair or replace the open circuit of harness.	Replace the A/C CM. <Ref. to AC-46, REMOVAL, Control Unit.>

J: DTC B1611 AIRMIX DOOR ACTUATOR POTENTIOMETER CIRCUIT SHORT (DRIVER'S)

DTC DETECTING CONDITION:

Air mix door actuator — potentiometer circuit is shorted.

TROUBLE SYMPTOM:

- Temperature cannot be adjusted.
- Temperature of the driver's dual air conditioner cannot be adjusted.

WIRING DIAGRAM:

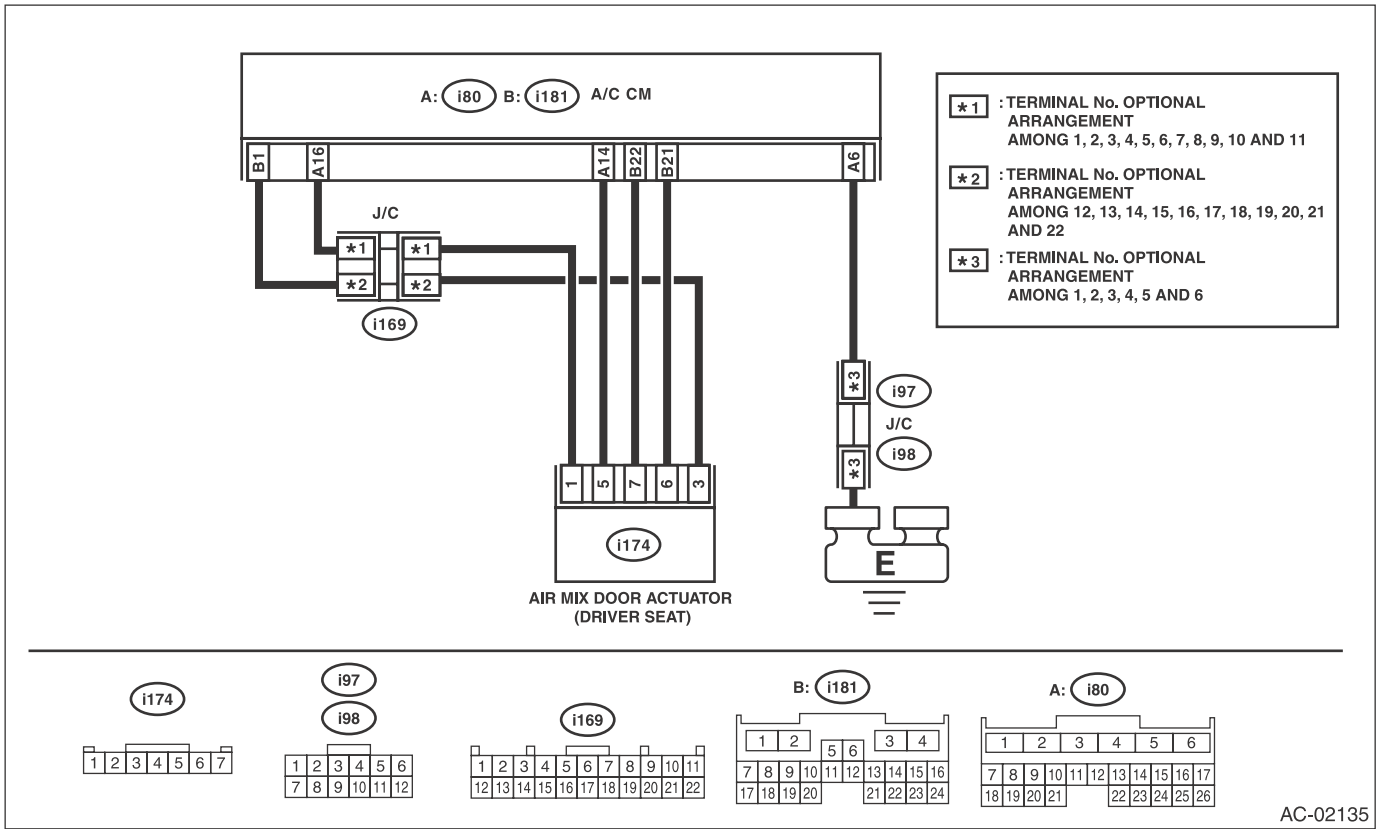

Step		Check	Yes	No
1	**CHECK CONNECTOR.** 1) Check the condition of connector connection. 2) Read the DTC of the A/C CM using the Subaru Select Monitor.	Is B1611 displayed?	Go to step **2**.	Repair the poor contact of connector.
2	**CHECK ACTUATOR.** 1) Disconnect the air mix door actuator (driver's). 2) Read the DTC of the A/C CM using the Subaru Select Monitor.	Is B1610 displayed?	Replace the air mix door actuator (driver's).	Go to step **3**.
3	**CHECK HARNESS.** 1) Disconnect the connector from A/C CM. 2) Using a tester, check continuity between terminals. ***Connector & terminal*** ***(i174) No. 1 — (i174) No. 3:*** ***(i174) No. 3 — (i174) No. 5:*** ***(i174) No. 5 — (i174) No. 1:***	Is there continuity?	Repair or replace the short circuit of the harness.	Go to step **4**.

	Step	Check	Yes	No
4	**CHECK HARNESS.** 1) Disconnect the connector from A/C CM. 2) Using a tester, check continuity between terminals. ***Connector & terminal*** ***(i174) No. 1 — (i80) No. 16:*** ***(i174) No. 3 — (i181) No. 1:*** ***(i174) No. 5 — (i80) No. 14:***	Is there continuity?	Replace the A/C CM. <Ref. to AC-46, REMOVAL, Control Unit.>	Repair or replace the short circuit of the harness.

K: DTC B1612 AIRMIX DOOR ACTUATOR LOCK (DRIVER'S)

DTC DETECTING CONDITION:

- Air mix door actuator — driver's seat is locked.
- The potentiometer value of the actuator does not change.

TROUBLE SYMPTOM:

Temperature of the driver's dual air conditioner cannot be adjusted.

WIRING DIAGRAM:

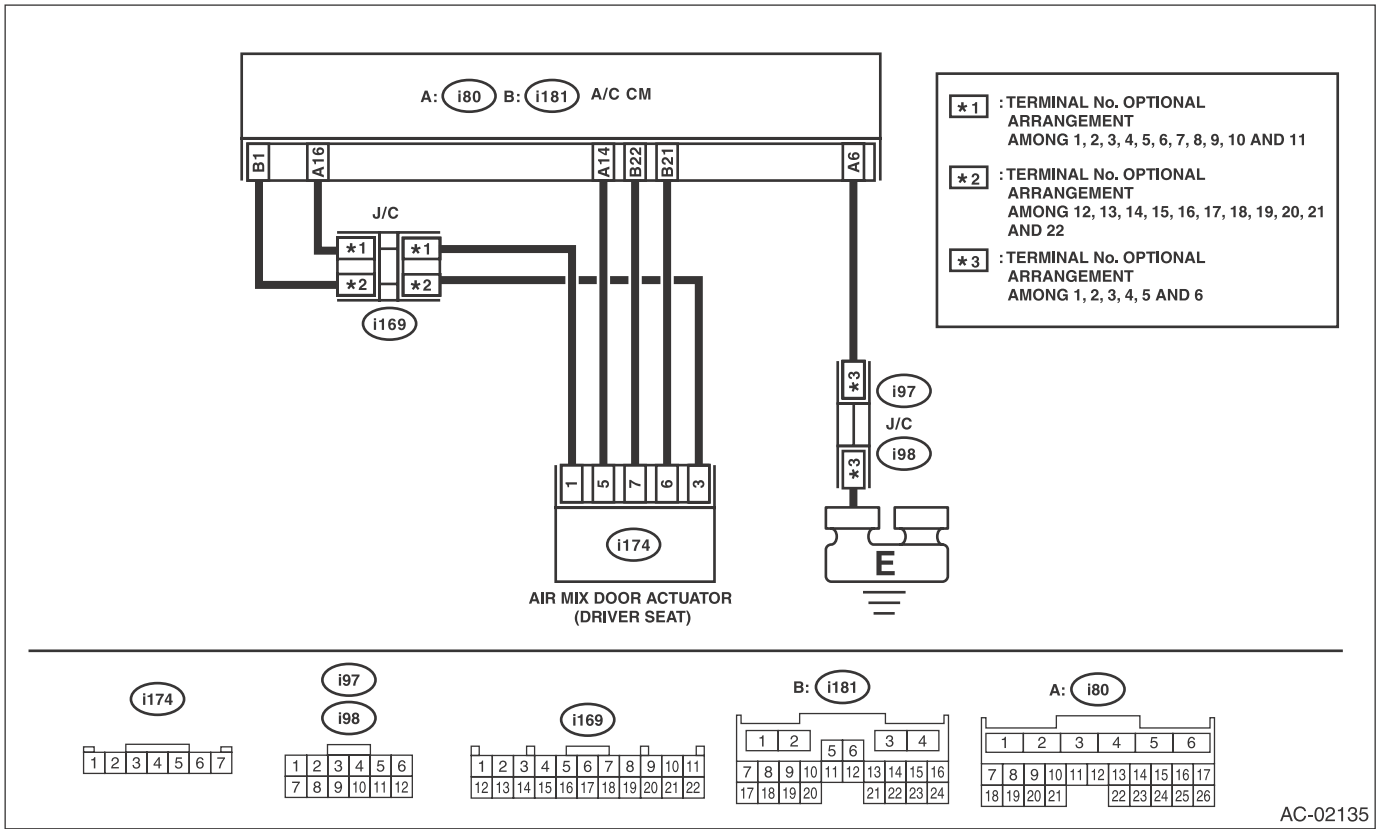

Step		Check	Yes	No
1	**CHECK CONNECTOR.** 1) Check the condition of connector connection. 2) Read the DTC of the A/C CM using the Subaru Select Monitor.	Is B1612 displayed?	Go to step **2**.	Repair the poor contact of connector.
2	**CHECK CURRENT DATA.** Using the Subaru Select Monitor, change the setting of "Airmix Dr Act Trgt Open Angle (Driver's)" from the A/C diagnosis and perform the active test.	Did the actuator move to the specified target opening angle?	Air mix door actuator circuit is normal.	Go to step **3**.
3	**CHECK AIR MIX DOOR ACTUATOR — POTENTIOMETER.** 1) Using the temperature control button, change the set temperature. 2) Using the Subaru Select Monitor, check "Airmix Door Actuator Position (Driver's)" of the current data from the A/C diagnosis.	Does the current data change?	Go to step **4**.	Replace the air mix door actuator (driver's). <Ref. to AC-54, REMOVAL, Heater and Cooling Unit.>
4	**CHECK HARNESS.** 1) Turn the ignition switch to ON. 2) Using the tester, measure the voltage between terminals. ***Connector & terminal (i174) No. 1 — No. 3:***	Is the voltage 4.5 — 5.0 V?	Check the connection of the air mix door actuator position circuit.	Go to step **5**.

Step		Check	Yes	No
5	**CHECK HARNESS.** 1) Disconnect the connector from A/C CM. 2) Using a tester, check continuity between terminals. ***Connector & terminal*** ***(i174) No. 5 — (i80) No. 14:***	Is there continuity?	Replace the A/C CM. <Ref. to AC-46, REMOVAL, Control Unit.>	Repair or replace the open circuit of harness.

L: DTC B1613 AIRMIX DOOR ACTUATOR POTENTIOMETER CIRCUIT OPEN (PASSENGER'S)

DTC DETECTING CONDITION:
Air mix door actuator — potentiometer circuit is open.
TROUBLE SYMPTOM:
Temperature of the passenger's dual air conditioner cannot be adjusted.
WIRING DIAGRAM:

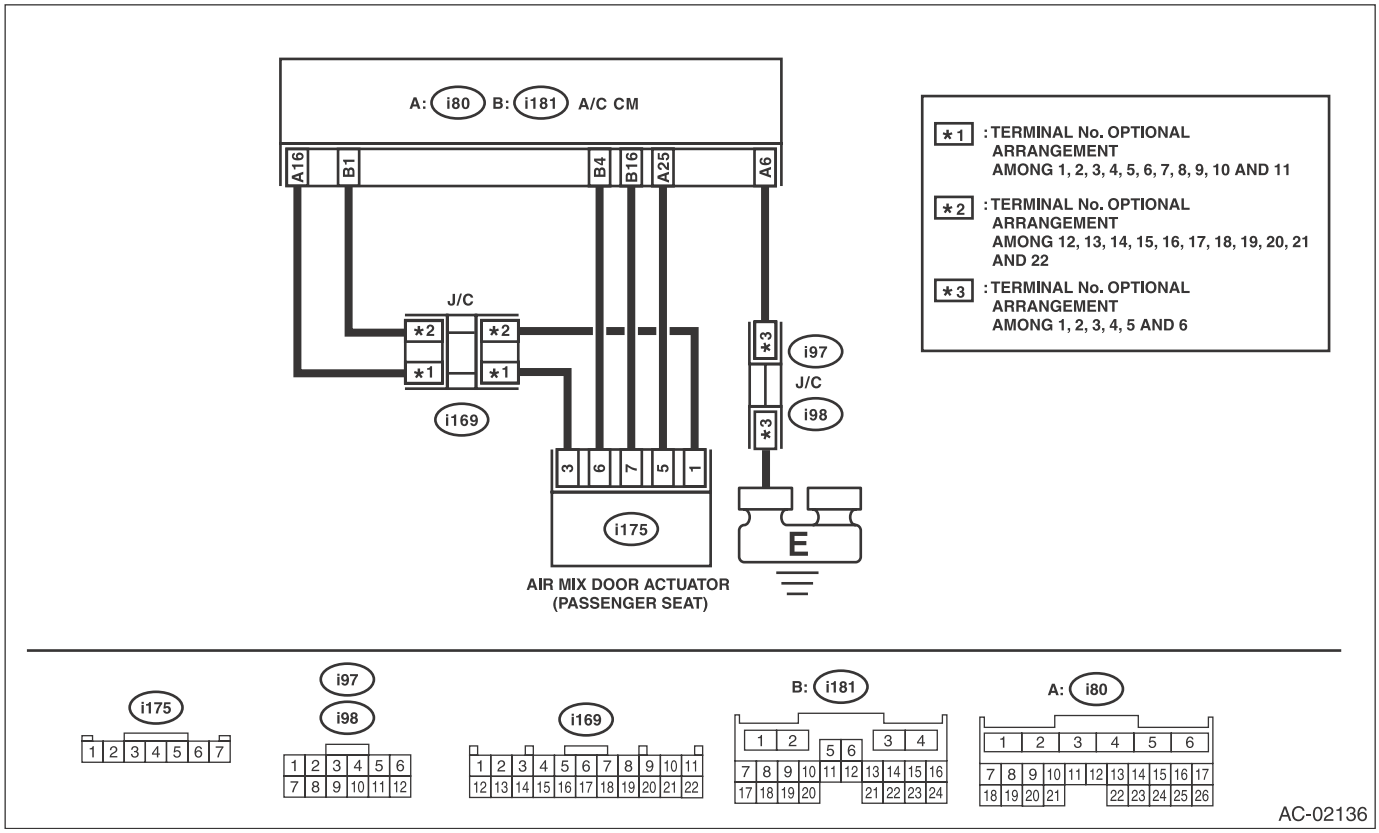

Step		Check	Yes	No
1	**CHECK CONNECTOR.** 1) Check the condition of connector connection. 2) Read the DTC of the A/C CM using the Subaru Select Monitor.	Is B1613 displayed?	Go to step **2**.	Repair the poor contact of connector.
2	**CHECK ACTUATOR.** 1) Disconnect the air mix door actuator (passenger's). 2) Short No. 3 and No. 5 of i175 connector. 3) Read the DTC of the A/C CM using the Subaru Select Monitor.	Is B1614 displayed?	Go to step **3**.	Replace the air mix door actuator (passenger's). <Ref. to AC-54, REMOVAL, Heater and Cooling Unit.>
3	**CHECK HARNESS.** 1) Disconnect the connector from A/C CM. 2) Using a tester, check continuity between terminals. ***Connector & terminal*** ***(i175) No. 1 — (i181) No. 1:*** ***(i175) No. 3 — (i80) No. 16:*** ***(i175) No. 5 — (i80) No. 25:***	Is there continuity?	Go to step **4**.	Repair or replace the open circuit of harness.

	Step	Check	Yes	No
4	**CHECK HARNESS.** Using a tester, check continuity between terminals. ***Connector & terminal*** ***(i175) No. 1 — (i175) No. 3:*** ***(i175) No. 3 — (i175) No. 5:*** ***(i175) No. 5 — (i175) No. 1:***	Is there continuity?	Repair or replace the open circuit of harness.	Replace the A/C CM. <Ref. to AC-46, REMOVAL, Control Unit.>

M: DTC B1614 AIRMIX DOOR ACTUATOR POTENTIOMETER CIRCUIT SHORT (PASSENGER'S)

DTC DETECTING CONDITION:
Air mix door actuator — potentiometer circuit is shorted.
TROUBLE SYMPTOM:
Temperature of the passenger's dual air conditioner cannot be adjusted.
WIRING DIAGRAM:

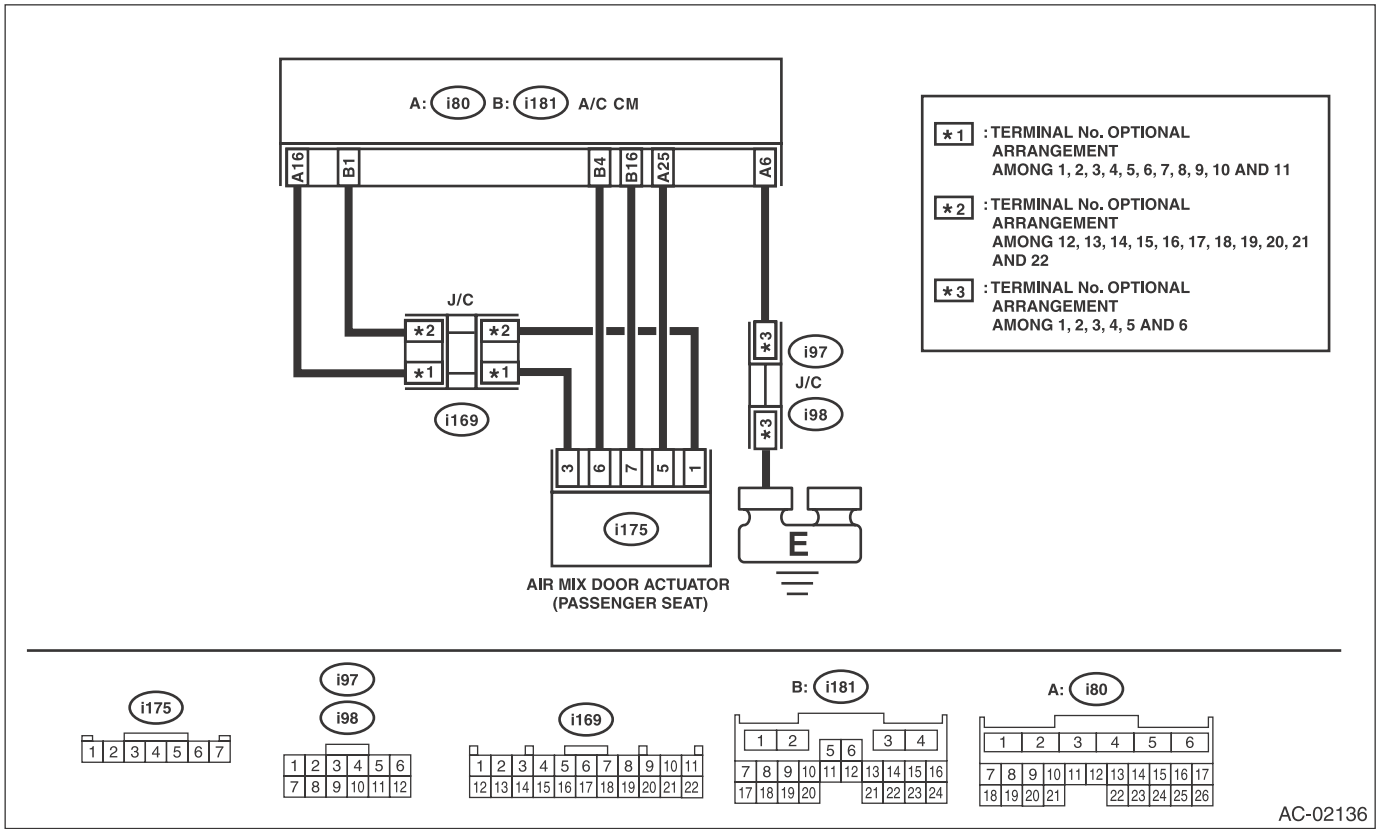

Step		Check	Yes	No
1	**CHECK CONNECTOR.** 1) Check the condition of connector connection. 2) Read the DTC of the A/C CM using the Subaru Select Monitor.	Is B1614 displayed?	Go to step **2**.	Repair the poor contact of connector.
2	**CHECK ACTUATOR.** 1) Disconnect the air mix door actuator. 2) Read the DTC of the A/C CM using the Subaru Select Monitor.	Is B1614 displayed?	Go to step **3**.	Replace the air mix door actuator position (passenger's).
3	**CHECK HARNESS.** 1) Disconnect the connector from A/C CM. 2) Using a tester, check continuity between terminals. ***Connector & terminal*** ***(i175) No. 1 — (i175) No. 3:*** ***(i175) No. 3 — (i175) No. 5:*** ***(i175) No. 5 — (i175) No. 1:***	Is there continuity?	Repair or replace the short circuit of the harness.	Go to step **4**.

	Step	Check	Yes	No
4	**CHECK HARNESS.** Using a tester, check continuity between terminals. ***Connector & terminal*** ***(i175) No. 1 — (i181) No. 1:*** ***(i175) No. 3 — (i80) No. 16:*** ***(i175) No. 5 — (i80) No. 25:***	Is there continuity?	Replace the A/C CM. <Ref. to AC-46, REMOVAL, Control Unit.>	Repair or replace the short circuit of the harness.

N: DTC B1615 AIRMIX DOOR ACTUATOR LOCK (PASSENGER'S)

DTC DETECTING CONDITION:

- Passenger's air mix door actuator is locked.
- The potentiometer value of the actuator does not change.

TROUBLE SYMPTOM:

Temperature of the passenger's dual air conditioner cannot be adjusted.

WIRING DIAGRAM:

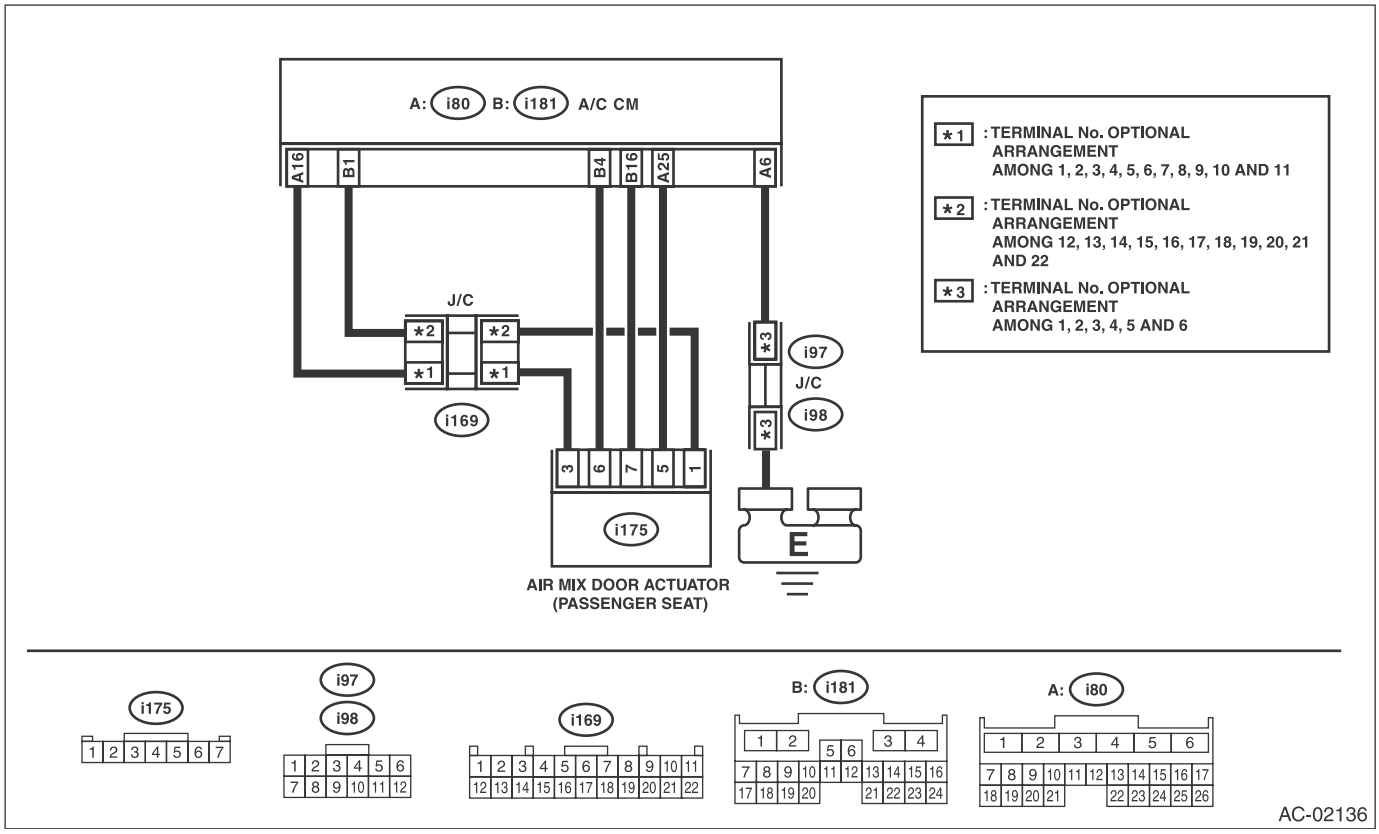

Step		Check	Yes	No
1	**CHECK CONNECTOR.** 1) Check the condition of connector connection. 2) Read the DTC of the A/C CM using the Subaru Select Monitor.	Is B1615 displayed?	Go to step **2**.	Repair the poor contact of connector.
2	**CHECK CURRENT DATA.** Using the Subaru Select Monitor, change the setting of "Airmix Dr Act Trgt Open Angle (Pas's)" from the A/C diagnosis and perform the active test.	Did the actuator move to the specified target opening angle?	Air mix door actuator circuit is normal.	Go to step **3**.
3	**CHECK AIR MIX DOOR ACTUATOR — POTENTIOMETER.** 1) Using the temperature control button, change the set temperature. 2) Using the Subaru Select Monitor, check "Airmix Door Actuator Position (Passenger's)" of the current data from the A/C diagnosis.	Does the current data change?	Go to step **4**.	Replace the air mix door actuator (passenger's). <Ref. to AC-54, REMOVAL, Heater and Cooling Unit.>
4	**CHECK HARNESS.** 1) Turn the ignition switch to ON. 2) Using the tester, measure the voltage between terminals. ***Connector & terminal (i175) No. 1 — No. 3:***	Is the voltage 4.5 — 5.0 V?	Check the connection of the air mix door actuator position circuit.	Go to step **5**.

Step		Check	Yes	No
5	**CHECK HARNESS.** 1) Disconnect the connector from A/C CM. 2) Using a tester, check continuity between terminals. ***Connector & terminal*** ***(i175) No. 5 — (i181) No. 25:***	Is there continuity?	Replace the A/C CM. <Ref. to AC-46, REMOVAL, Control Unit.>	Repair or replace the open circuit of harness.

O: DTC B1620 MODE DOOR ACTUATOR POTENTIOMETER CIRCUIT OPEN

DTC DETECTING CONDITION:

- Mode door does not move.
- The potentiometer value of the actuator does not change.

TROUBLE SYMPTOM:

Vent does not change.

WIRING DIAGRAM:

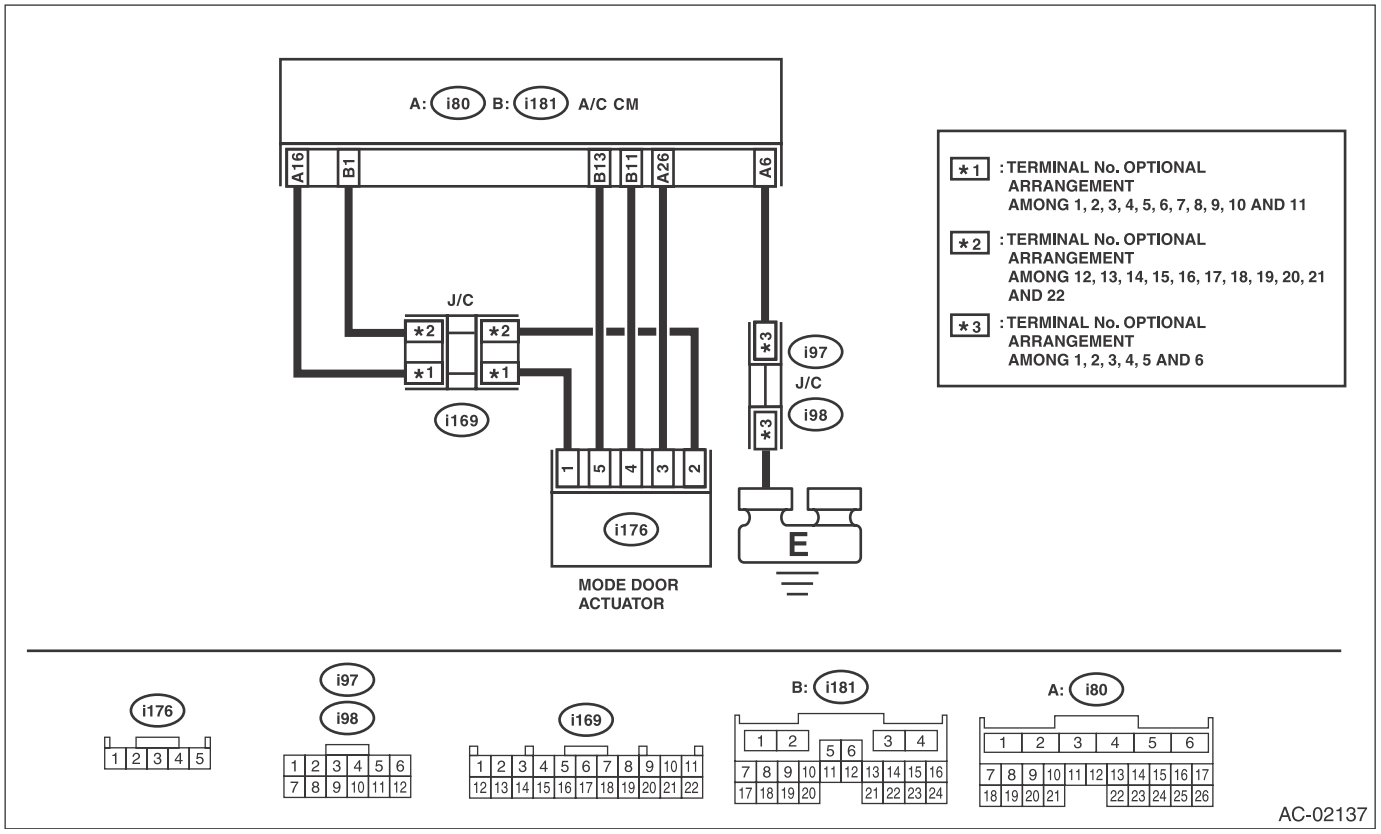

Step		Check	Yes	No
1	**CHECK CONNECTOR.** 1) Check the condition of connector connection. 2) Read the DTC of the A/C CM using the Subaru Select Monitor.	Is B1620 displayed?	Go to step **2**.	Repair the poor contact of connector.
2	**CHECK ACTUATOR.** 1) Disconnect the mode door actuator. 2) Short No. 2 and No. 3 of (i176) connector. 3) Read the DTC of the A/C CM using the Subaru Select Monitor.	Is B1621 displayed?	Replace the mode door actuator. <Ref. to AC-54, REMOVAL, Heater and Cooling Unit.>	Go to step **3**.
3	**CHECK HARNESS.** 1) Disconnect the connector from A/C CM. 2) Using the tester, measure the voltage between terminals. ***Connector & terminal*** ***(i176) No. 1 — (i80) No. 16:*** ***(i176) No. 2 — (i181) No. 1:*** ***(i176) No. 3 — (i80) No. 26:***	Is the voltage 4.5 — 5.0 V?	Go to step **4**.	Repair the open circuit of harness.

	Step	Check	Yes	No
4	**CHECK HARNESS.** Using a tester, check continuity between terminals. ***Connector & terminal*** ***(i176) No. 1 — (i176) No. 2:*** ***(i176) No. 2 — (i176) No. 3:*** ***(i176) No. 3 — (i176) No. 1:***	Is there continuity?	Repair or replace the short circuit of the harness.	Replace the A/C CM. <Ref. to AC-46, REMOVAL, Control Unit.>

P: DTC B1621 MODE DOOR ACTUATOR POTENTIOMETER CIRCUIT SHORT

DTC DETECTING CONDITION:

- Mode door does not move.
- The potentiometer value of the actuator does not change.

TROUBLE SYMPTOM:

Vent does not change.

WIRING DIAGRAM:

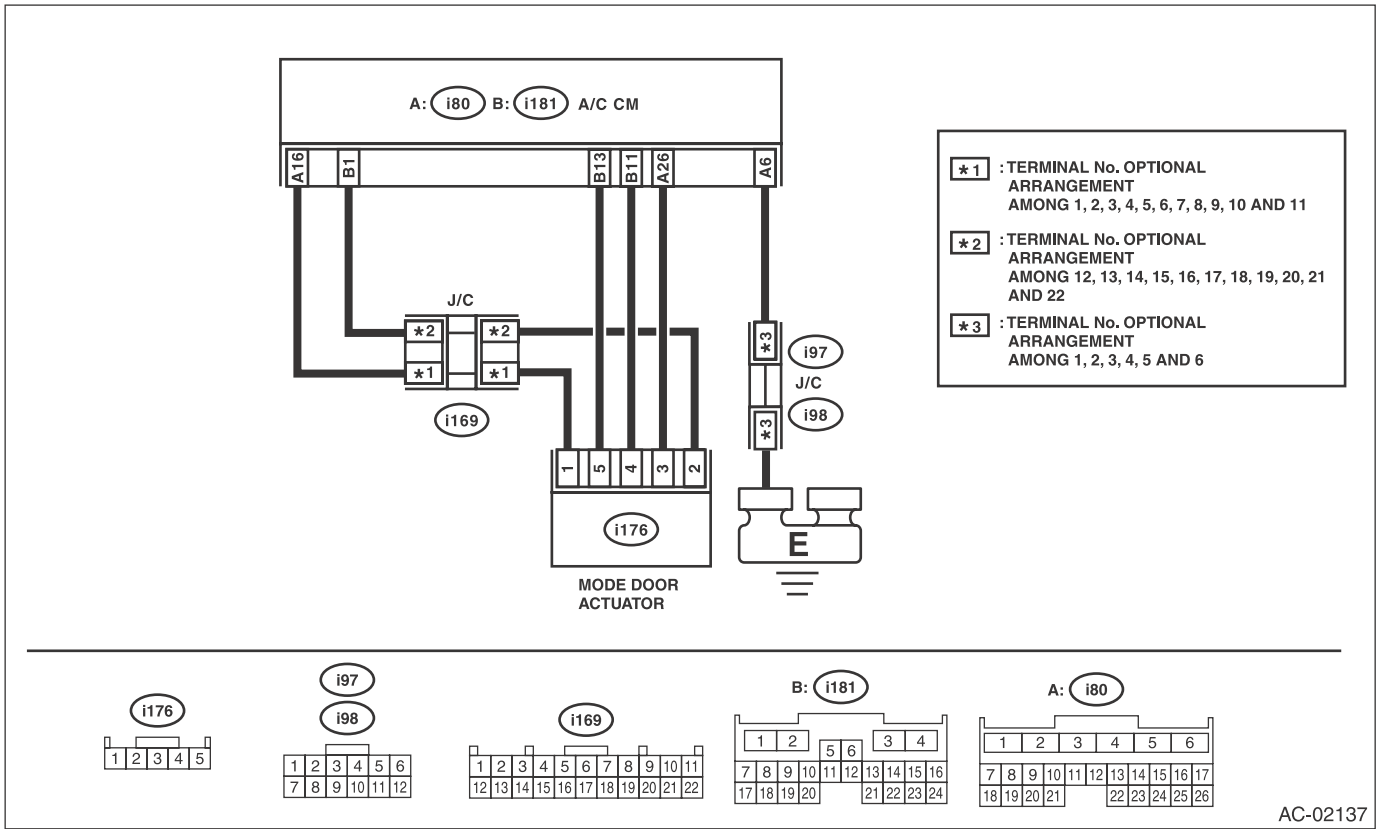

Step		Check	Yes	No
1	**CHECK CONNECTOR.** 1) Check the condition of connector connection. 2) Read the DTC of the A/C CM using the Subaru Select Monitor.	Is B1621 displayed?	Go to step **2**.	Repair the poor contact of connector.
2	**CHECK ACTUATOR.** 1) Disconnect the mode door actuator. 2) Read the DTC of the A/C CM using the Subaru Select Monitor.	Is B1620 displayed?	Go to step **3**.	Replace the mode door actuator. <Ref. to AC-54, REMOVAL, Heater and Cooling Unit.>
3	**CHECK HARNESS.** 1) Disconnect the connector from A/C CM. 2) Using a tester, check continuity between terminals. ***Connector & terminal*** ***(i176) No. 1 — (i176) No. 2:*** ***(i176) No. 2 — (i176) No. 3:*** ***(i176) No. 3 — (i176) No. 1:***	Is there continuity?	Repair or replace the short circuit of the harness.	Go to step **4**.

	Step	Check	Yes	No
4	**CHECK HARNESS.** Using a tester, check continuity between terminals. ***Connector & terminal*** ***(i176) No. 1 — (i80) No. 16:*** ***(i176) No. 2 — (i181) No. 1:*** ***(i176) No. 3 — (i80) No. 26:***	Is there continuity?	Replace the A/C CM. <Ref. to AC-46, REMOVAL, Control Unit.>	Repair or replace the open circuit of harness.

Q: DTC B1622 MODE DOOR ACTUATOR LOCK

DTC DETECTING CONDITION:

- Mode door does not move.
- The potentiometer value of the actuator does not change.

TROUBLE SYMPTOM:

Vent does not change.

WIRING DIAGRAM:

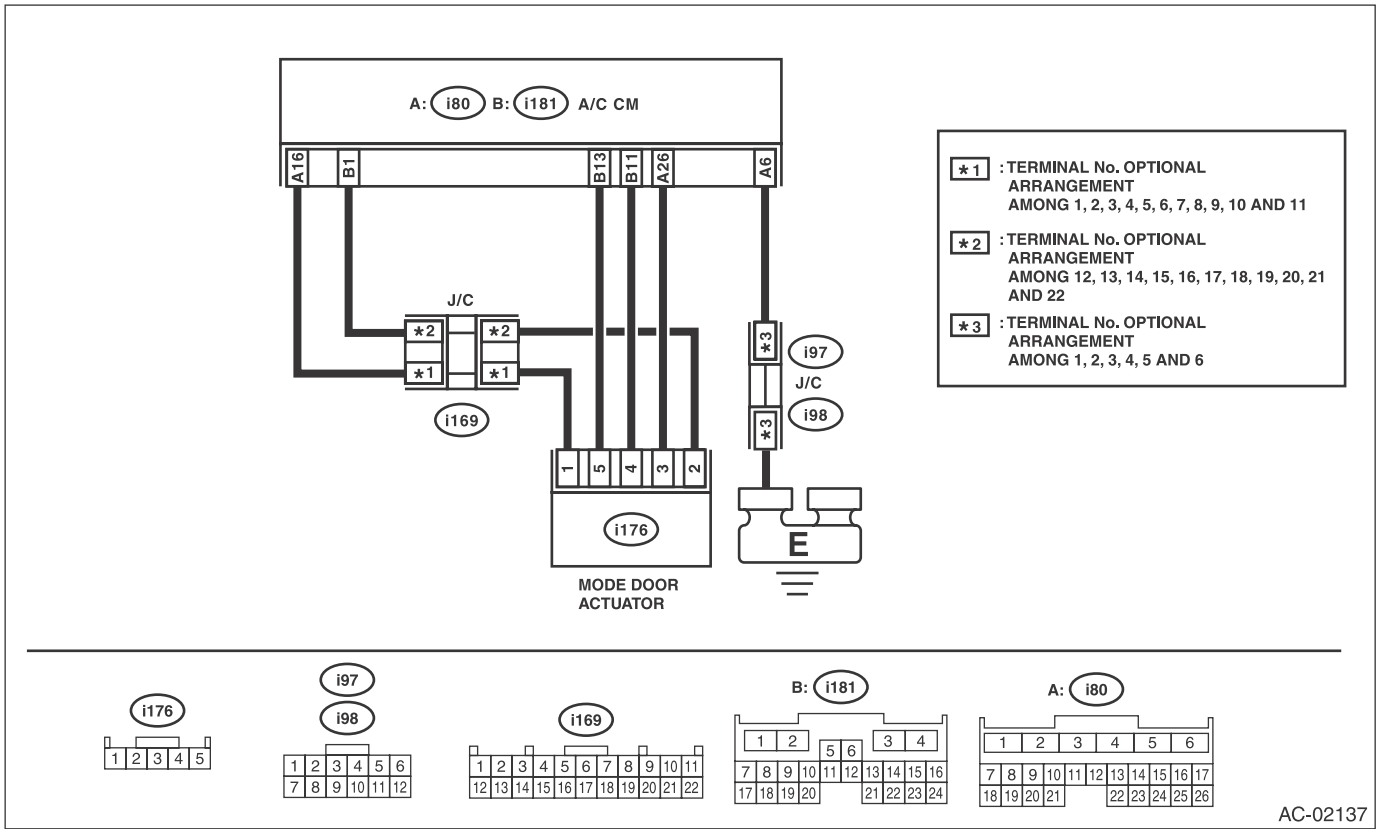

Step		Check	Yes	No
1	**CHECK CONNECTOR.** 1) Check the condition of connector connection. 2) Read the DTC of the A/C CM using the Subaru Select Monitor.	Is B1622 displayed?	Go to step **2**.	Repair the poor contact of connector.
2	**CHECK CURRENT DATA.** Using the Subaru Select Monitor, change the setting of “Mode Door Actuator Position Target” from the A/C diagnosis and perform the active test.	Did the actuator move to the specified target opening angle?	Mode door actuator circuit is normal.	Go to step **3**.
3	**CHECK MODE DOOR ACTUATOR — POTENTIOMETER.** 1) Using the temperature control button, change the set temperature. 2) Using the Subaru Select Monitor, check “Mode Door Actuator Position” of the current data from the A/C diagnosis.	Does the current data change?	Go to step **4**.	Replace the mode door actuator (passenger’s). <Ref. to AC-54, REMOVAL, Heater and Cooling Unit.>
4	**CHECK HARNESS.** 1) Turn the ignition switch to ON. 2) Using the tester, measure the voltage between terminals. ***Connector & terminal (i176) No. 1 — No. 2:***	Is the voltage 4.5 — 5.0 V?	Check the connection of the mode door actuator position circuit.	Go to step **5**.

Step		Check	Yes	No
5	**CHECK HARNESS.** 1) Disconnect the connector from A/C CM. 2) Using a tester, check continuity between terminals. ***Connector & terminal*** ***(i176) No. 3 — (i80) No. 26:***	Is there continuity?	Replace the A/C CM. <Ref. to AC-46, REMOVAL, Control Unit.>	Repair or replace the open circuit of harness.

R: DTC U0028 HEATER CONTROL PANEL COMMUNICATION ERROR

DTC DETECTING CONDITION:

- Heater and A/C do not operate.
- A/C panel display does not change even though being operated.

TROUBLE SYMPTOM:

Unable to operate A/C.

WIRING DIAGRAM:

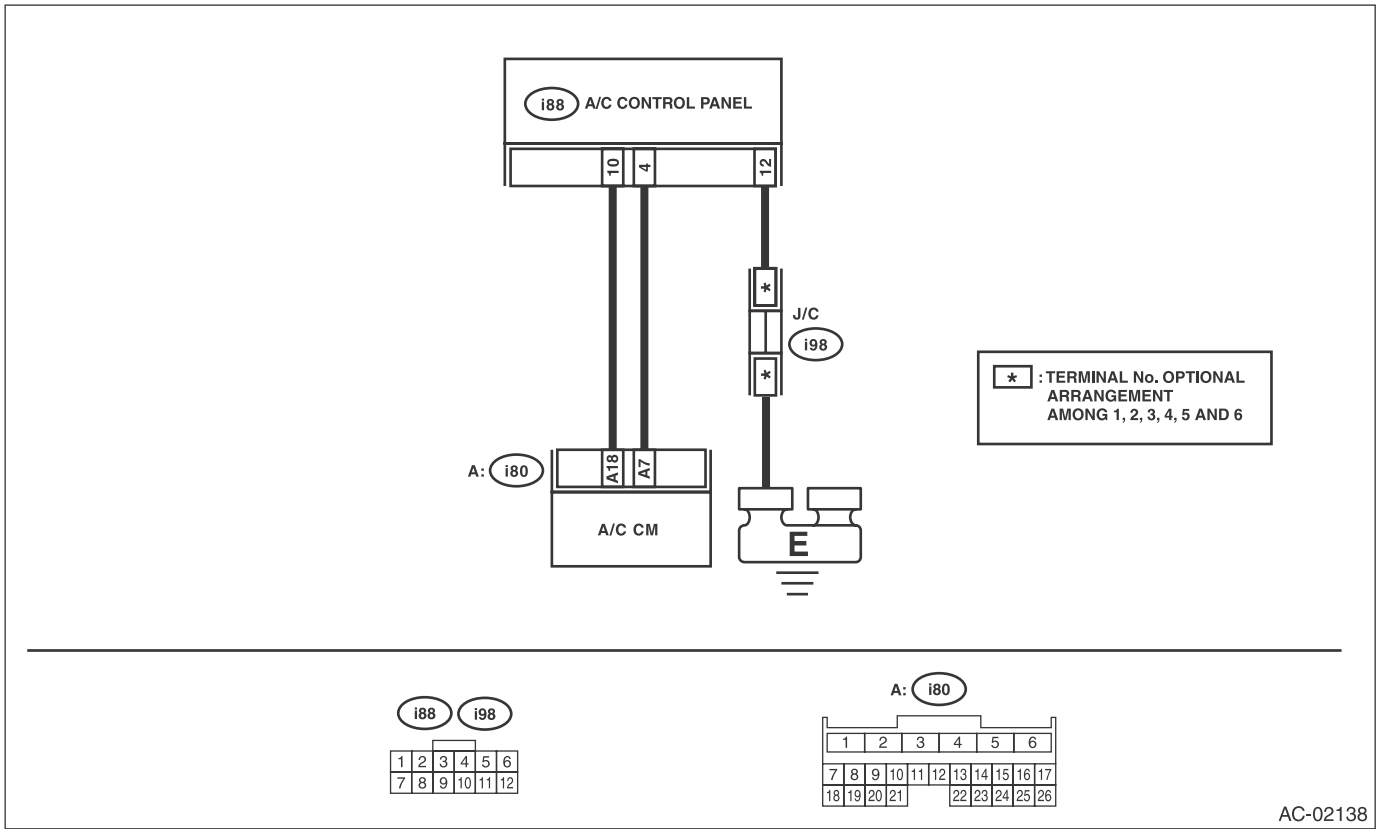

Step		Check	Yes	No
1	**CHECK HARNESS.** 1) Disconnect the connector from A/C control panel and A/C CM. 2) Using a tester, check for continuity between the harness terminals. ***Connector & terminal*** ***(i80) No. 18 — (i88) No. 10:*** ***(i80) No. 7 — (i88) No. 4:***	Is there continuity?	Go to step **2**.	Repair or replace the open circuit of harness.
2	**CHECK HARNESS.** Using a tester, check continuity between terminals. ***Connector & terminal*** ***(i80) No. 18 — No. 7:***	Is there continuity?	Repair or replace the short circuit of the harness.	Replace the A/C CM. <Ref. to AC-46, REMOVAL, Control Unit.>

S: DTC U0001 CAN COMMUNICATION BUS OFF

DTC DETECTING CONDITION:

- Data to be received via CAN communication do not arrive.
- A/C cooperation control does not operate.

TROUBLE SYMPTOM:

A/C does not operate fully automatically.

	Step	Check	Yes	No
1	**CHECK DTC.** Read the DTC of the CAN system using the Subaru Select Monitor.	Is a DTC of the CAN system detected?	Perform the diagnosis according to DTC.	Go to step **2**.
2	**CHECK A/C CM.** 1) Replace with a normally operating A/C CM. 2) Read the DTC of the A/C system using the Subaru Select Monitor.	Is U0001 detected?	Go to step **3**.	Replace the A/C CM. <Ref. to AC-46, REMOVAL, Control Unit.>
3	**CHECK CAN COMMUNICATION CIRCUIT.** Check the CAN communication circuit. <Ref. to LAN(diag)-13, LIST, CAN Communication Circuit Check.>	Is the CAN communication circuit normal?	It is possible that temporary poor communication occurs. Clear the memory.	Repair or replace the CAN communication circuit.

T: DTC U0002 CAN COMMUNICATION ERROR

DTC DETECTING CONDITION:

- Data to be received via CAN communication do not arrive.
- A/C cooperation control does not operate.

TROUBLE SYMPTOM:

A/C does not operate fully automatically.

	Step	Check	Yes	No
1	**CHECK CURRENT DATA.** Read the DTC of the CAN system using the Subaru Select Monitor.	Is a DTC of the CAN system detected?	Perform the diagnosis according to DTC.	Go to step **2**.
2	**CHECK A/C CM.** 1) Replace with a normally operating A/C CM. 2) Read the DTC of the A/C system using the Subaru Select Monitor.	Is U0002 detected?	Go to step **3**.	Replace the A/C CM. <Ref. to AC-46, REMOVAL, Control Unit.>
3	**CHECK CAN COMMUNICATION CIRCUIT.** Check the CAN communication circuit. <Ref. to LAN(diag)-13, LIST, CAN Communication Circuit Check.>	Is the CAN communication circuit normal?	It is possible that temporary poor communication occurs. Clear the memory.	Repair or replace the CAN communication circuit.

U: DTC B1641 REFRIGERANT FLOW SENSOR CIRCUIT SHORT

DTC DETECTING CONDITION:

- The voltage of the sensor signal line decreased to 0.3 V or less.
- The circuit is open or shorted.

TROUBLE SYMPTOM:

A/C does not function because refrigerant flow amount cannot be measured.

WIRING DIAGRAM:

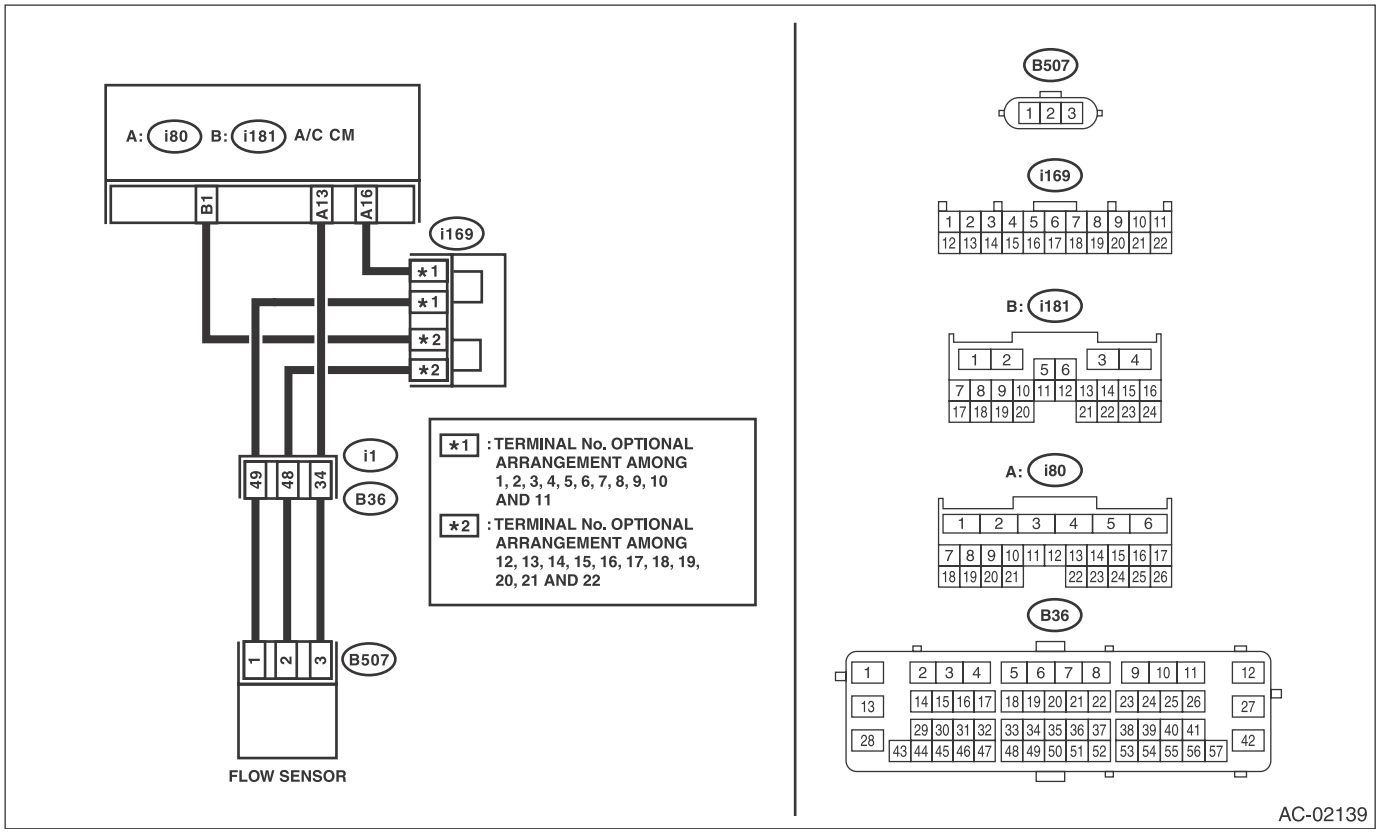

Step		Check	Yes	No
1	**CHECK SENSOR POWER SUPPLY.** 1) Disconnect the refrigerant flow sensor connector. 2) Turn the ignition switch to ON. 3) Using the tester, measure the voltage between terminals. ***Connector & terminal*** ***(B507) No. 1 — No. 2:***	Is the voltage 4.5 — 5.0 V?	Go to step **5**.	Go to step **2**.
2	**CHECK HARNESS.** 1) Disconnect the A/C CM connector. 2) Using a tester, check continuity between terminals. ***Connector & terminal*** ***(B507) No. 3 — (i80) No. 13:*** ***(B507) No. 2 — (i181) No. 1:*** ***(B507) No. 1 — (i80) No. 16:***	Is there continuity?	Go to step **3**.	Repair or replace the open circuit of harness.
3	**CHECK HARNESS.** Using a tester, check continuity between terminals. ***Connector & terminal*** ***(B507) No. 1 — Chassis ground:*** ***(B507) No. 2 — Chassis ground:*** ***(B507) No. 3 — Chassis ground:***	Is there continuity?	Repair or replace the short circuit of the harness.	Go to step **4**.

	Step	Check	Yes	No
4	**CHECK HARNESS.** Using a tester, check continuity between terminals. ***Connector & terminal*** ***(B507) No. 1 — No. 2:*** ***(B507) No. 1 — No. 3:*** ***(B507) No. 2 — No. 3:***	Is there continuity?	Repair or replace the short circuit of the harness.	Go to step **5**.
5	**CHECK A/C CM.** 1) Replace the A/C CM with a normal part. 2) Read the DTC using Subaru Select Monitor.	Is B1641 detected?	Replace refrigerant flow sensor.	Replace the A/C CM. <Ref. to AC-46, REMOVAL, Control Unit.>

V: DTC B1642 REFRIGERANT FLOW SENSOR CIRCUIT OPEN

DTC DETECTING CONDITION:

- The voltage of the sensor signal line increased to 4.7 V or more.
- The circuit is open or shorted.

TROUBLE SYMPTOM:

A/C does not function because refrigerant flow amount cannot be measured.

WIRING DIAGRAM:

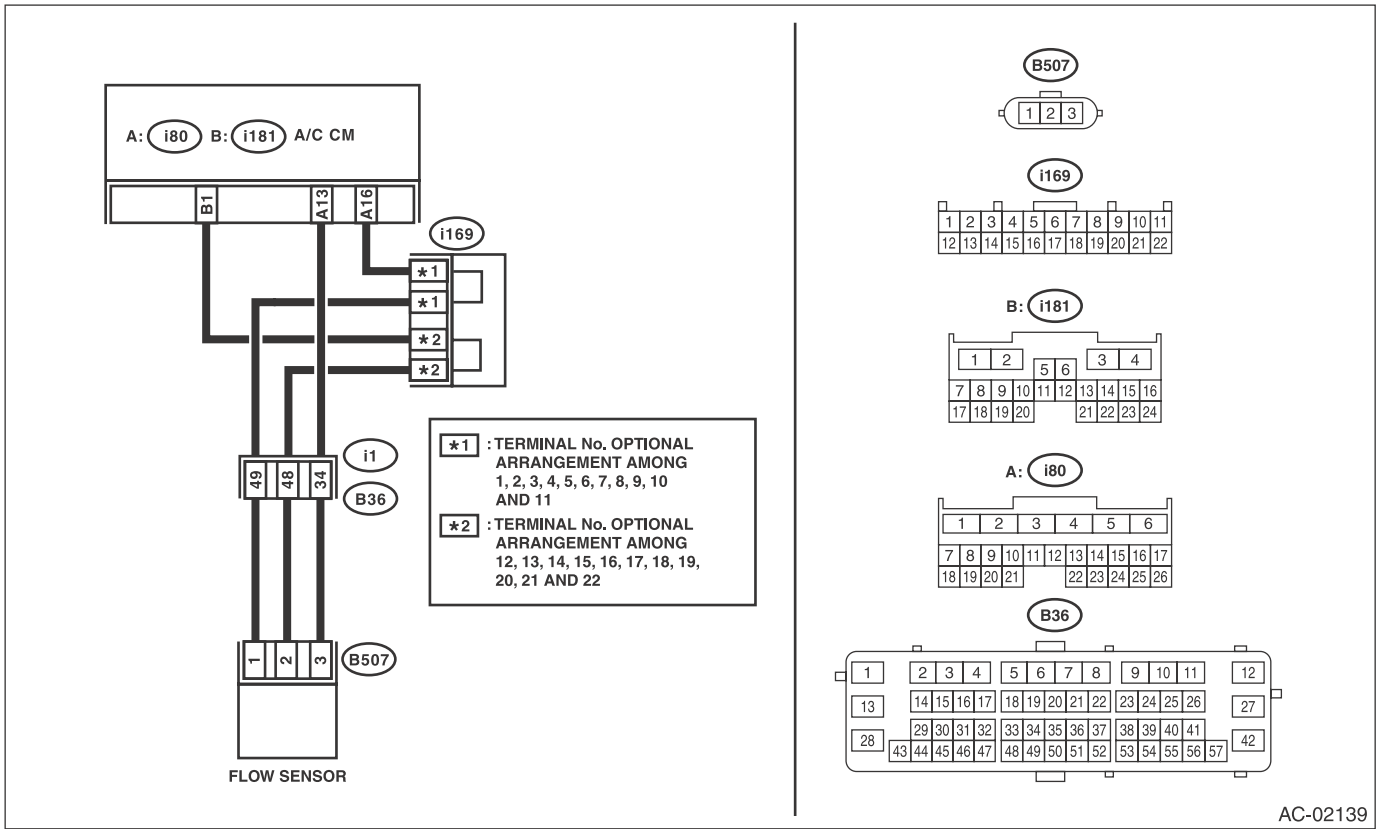

Step		Check	Yes	No
1	**CHECK CURRENT DATA.** Using the Subaru Select Monitor, check “Refrigerant Flow”.	Is the value 3.2 MPa or more?	Go to step **2**.	Refrigerate flow sensor circuit is normal.
2	**CHECK SENSOR POWER SUPPLY.** 1) Disconnect the refrigerant flow sensor connector. 2) Turn the ignition switch to ON. 3) Using the tester, measure the voltage between terminals. ***Connector & terminal*** ***(B507) No. 1 — No. 2:***	Is the voltage 4.5 — 5.0 V?	Go to step **6**.	Go to step **3**.
3	**CHECK HARNESS.** 1) Disconnect the A/C CM connector. 2) Using a tester, check continuity between terminals. ***Connector & terminal*** ***(B507) No. 3 — (i80) No. 13:*** ***(B507) No. 2 — (i181) No. 1:*** ***(B507) No. 1 — (i80) No. 16:***	Is there continuity?	Go to step **4**.	Repair or replace the open circuit of harness.

	Step	Check	Yes	No
4	**CHECK HARNESS.** Using a tester, check continuity between terminals. ***Connector & terminal*** ***(B507) No. 1 — Chassis ground:*** ***(B507) No. 2 — Chassis ground:*** ***(B507) No. 3 — Chassis ground:***	Is there continuity?	Repair or replace the short circuit of the harness.	Go to step **5**.
5	**CHECK HARNESS.** Using a tester, check continuity between terminals. ***Connector & terminal*** ***(B507) No. 1 — No. 2:*** ***(B507) No. 1 — No. 3:*** ***(B507) No. 2 — No. 3:***	Is there continuity?	Repair or replace the short circuit of the harness.	Go to step **6**.
6	**CHECK A/C CM.** 1) Replace the A/C CM with a normal part. 2) Read the DTC using Subaru Select Monitor.	Is B1641 detected?	Replace refrigerant flow sensor.	Replace the A/C CM. <Ref. to AC-46, REMOVAL, Control Unit.>

W: DTC B1643 VARIABLE FLOW CHANGE SOLENOID DUTY CIRCUIT ABNORMAL

DTC DETECTING CONDITION:

- A/C does not operate.
- Refrigerant pressure does not increase or decrease.

TROUBLE SYMPTOM:

Refrigerant pressure cannot be changed.

WIRING DIAGRAM:

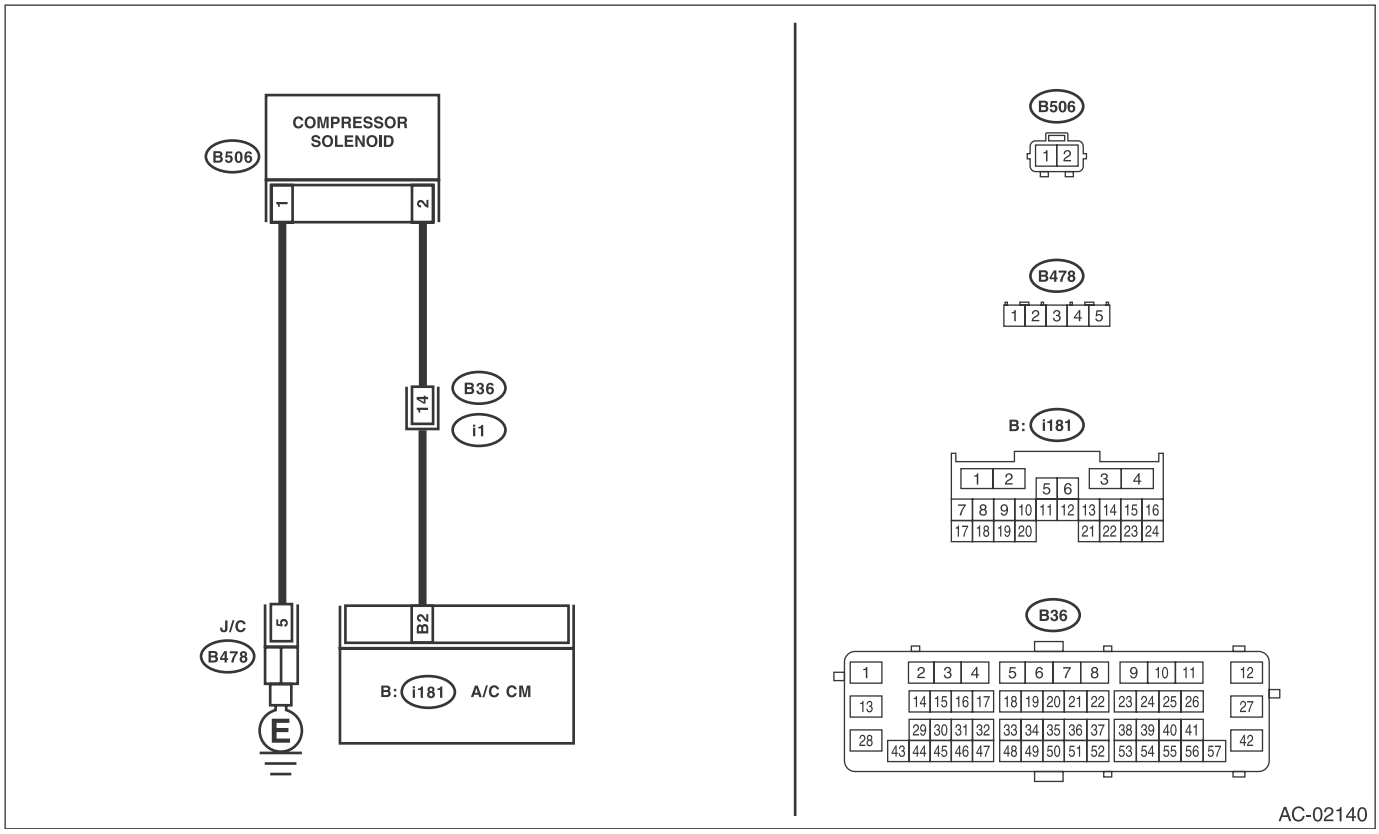

Step		Check	Yes	No
1	**ACTIVE TEST.** 1) Attach the manifold gauge. 2) Using the Subaru Select Monitor, change the setting of “Variable Solenoid Output Duty” from the A/C diagnosis and perform the active test.	Did the actuator operate to the specified target, and the pressure change?	Variable flow change solenoid circuit is normal.	Go to step **2**.
2	**CHECK VARIABLE FLOW CHANGE SOLENOID.** 1) Disconnect the variable flow change solenoid connector. 2) Using a tester, measure the resistance of the solenoid. ***Connector & terminal*** ***(B506) No. 1 — No. 2:***	Is the resistance between 10 — 12 Ω?	Go to step **3**.	Replace the variable flow change solenoid. <Ref. to AC-47, Compressor.>
3	**CHECK HARNESS.** 1) Disconnect the A/C CM connector. 2) Using a tester, check for continuity between the harness terminals. ***Connector & terminal*** ***(B506) No. 2 — (i181) No. 2:*** ***(B506) No. 1 — Chassis ground:***	Is there continuity?	Go to step **4**.	Repair or replace the open circuit of harness.

	Step	Check	Yes	No
4	**CHECK HARNESS.** Using a tester, check continuity between terminals. ***Connector & terminal*** ***(B506) No. 2 — Chassis ground:***	Is there continuity?	Repair or replace the short circuit of the harness.	Replace the A/C CM. <Ref. to AC-46, REMOVAL, Control Unit.>

X: DTC B1644 REFRIGERANT NOT SEALED DRIVE ERROR

DTC DETECTING CONDITION:

- Compressor was operated while refrigerant was low.
- Compressor was operated while refrigerant pressure was extremely low.

TROUBLE SYMPTOM:

A/C does not operate.

WIRING DIAGRAM:

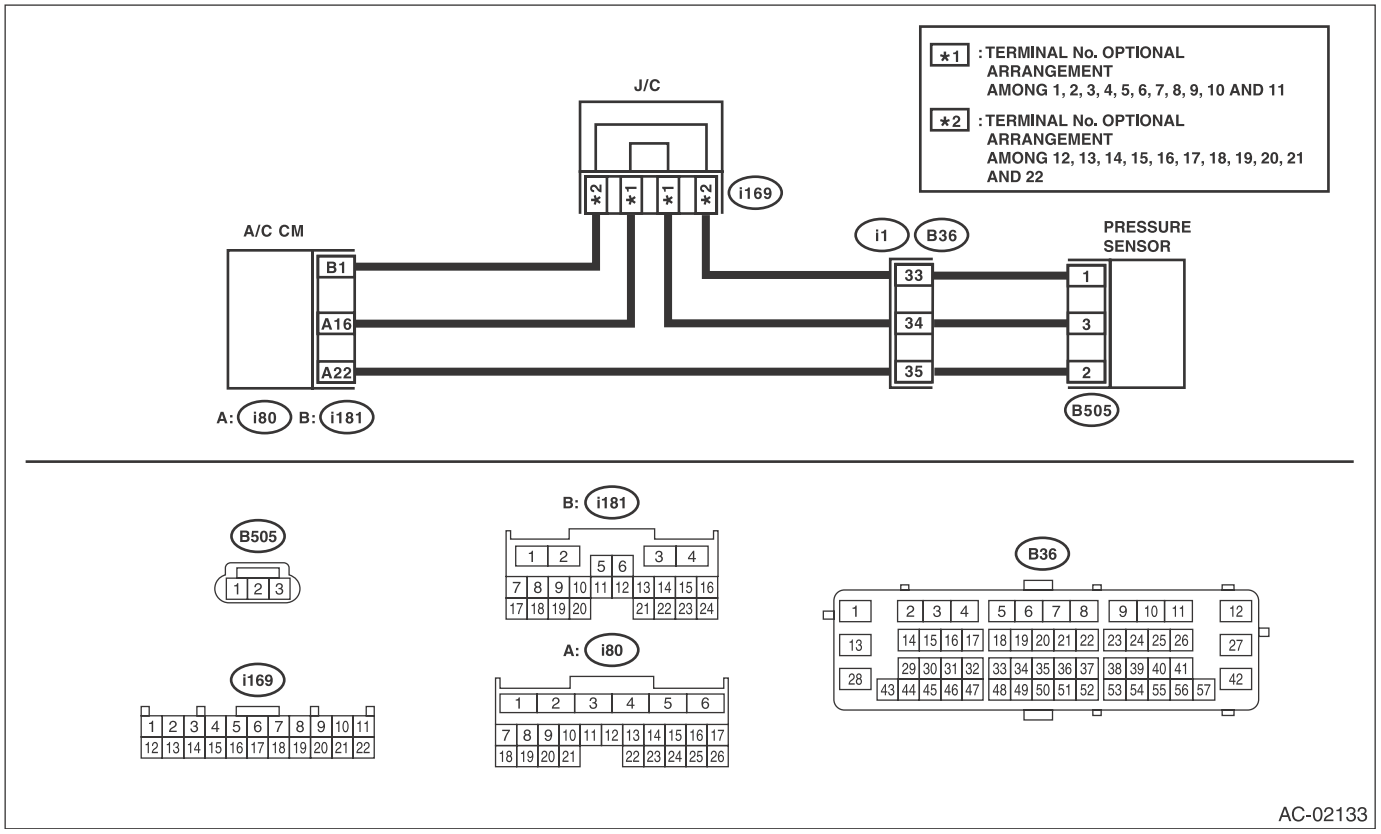

Step		Check	Yes	No
1	**CHECK AMOUNT OF REFRIGERANT.** Check the refrigerant pressure and filling amount. <Ref. to AC-17, PROCEDURE, Refrigerant Pressure with Manifold Gauge Set.>	Is the filling amount a standard value?	Check the refrigerant pressure sensor or refrigerant flow sensor for defect.	Replace the compressor.

15.Diagnostics with Phenomenon

A: INSPECTION

Symptoms	Problem parts
A/C system fails to operate.	• Fuse • Connector (Poor contact) • Ground • A/C control module • Blower fan motor • Blower fan relay • A/C relay • Compressor • Compressor variable solenoid • Evaporator sensor
Fuse is blown out.	• Fuse • Connector (Poor contact) • Harness shorted
Illumination cannot dim.	• Fuse • Connector (Poor contact) • A/C control module
Blower fan does not rotate or fan speed cannot be controlled.	• Fuse • Connector (Poor contact) • Ground • A/C control module • Blower fan motor • Blower fan relay
Unable to switch suction vents.	• Connector (Poor contact) • A/C control module • Intake door actuator
Unable to switch vents.	• Connector (Poor contact) • A/C control module • Mode door actuator
Compartment temperature does not rise. (Warm air does not come out.)	• Connector (Poor contact) • A/C control module • Air mix door actuator • In-vehicle sensor, ambient sensor, evaporator sensor and sunload sensor • In-vehicle sensor aspirator hose
Compartment temperature does not lower. (Cold air does not come out.)	• Connector (Poor contact) • A/C control module • Air mix door actuator • A/C relay • Compressor • Compressor variable solenoid • Radiator fan motor • Radiator fan relay • In-vehicle sensor, ambient sensor, evaporator sensor and sunload sensor • In-vehicle sensor aspirator hose
Compartment temperature is higher or lower than setting temperature.	• A/C control module • Air mix door actuator • In-vehicle sensor, ambient sensor, evaporator sensor and sunload sensor • In-vehicle sensor aspirator hose
Compartment temperature does not quickly respond to setting temperature.	• Air mix door actuator • In-vehicle sensor, ambient sensor, evaporator sensor and sunload sensor • In-vehicle sensor aspirator hose
Radiator fan does not rotate during A/C operation.	• Radiator fan motor • Radiator fan relay

AIRBAG SYSTEM

AB

		Page
1.	General Description	2
2.	Airbag Connector	18
3.	Inspection Locations After a Collision	26
4.	Driver's Airbag Module	31
5.	Passenger's Airbag Module	33
6.	Side Airbag Module	51
7.	Curtain Airbag Module	61
8.	Airbag Control Module	64
9.	Front Sub Sensor	67
10.	Side Airbag Sensor	74
11.	Curtain Airbag Sensor	80
12.	Roll Connector	89

1. General Description

A: COMPONENT

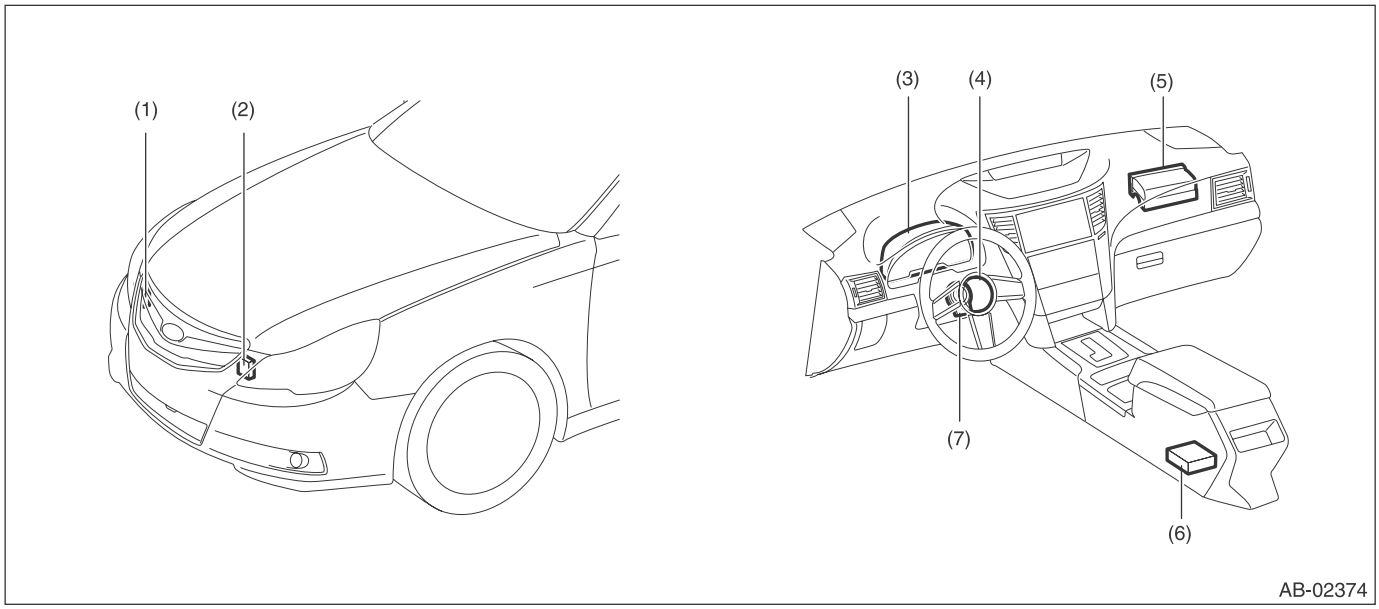

(1) Front sub sensor RH
(2) Front sub sensor LH
(3) Airbag warning light (in combination meter)
(4) Airbag module ASSY (driver)
(5) Airbag module ASSY (passenger)
(6) Airbag control module
(7) Steering roll connector

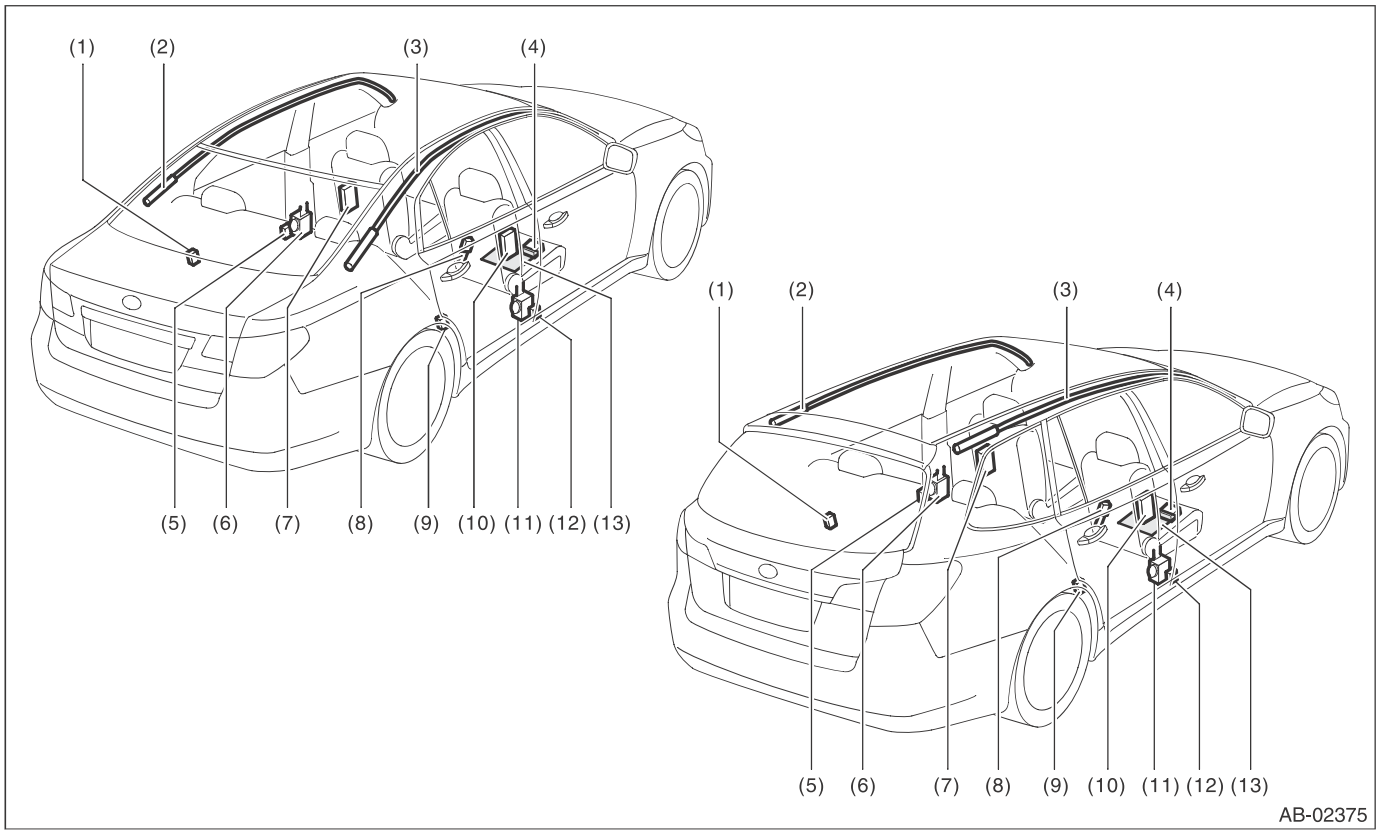

(1) Curtain airbag sensor LH
(2) Curtain airbag module LH
(3) Curtain airbag module RH
(4) Occupant detection control module
(5) Side airbag sensor LH
(6) Seat belt pretensioner LH
(7) Side airbag module LH
(8) Buckle switch RH
(9) Curtain airbag sensor RH
(10) Side airbag module RH
(11) Seat belt pretensioner RH
(12) Side airbag sensor RH
(13) Occupant detection sensor

1. DRIVER'S AIRBAG MODULE

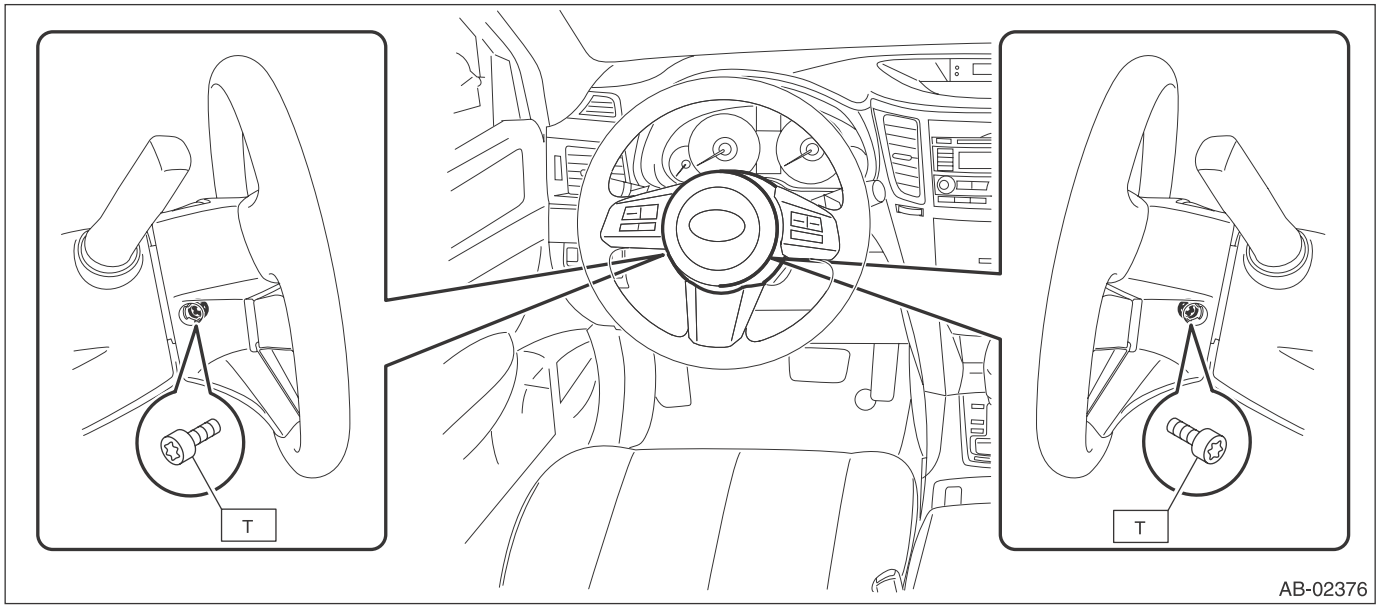

Tightening torque:
10 N·m (1.0 kgf-m, 7.4 ft-lb)

2. PASSENGER'S AIRBAG MODULE

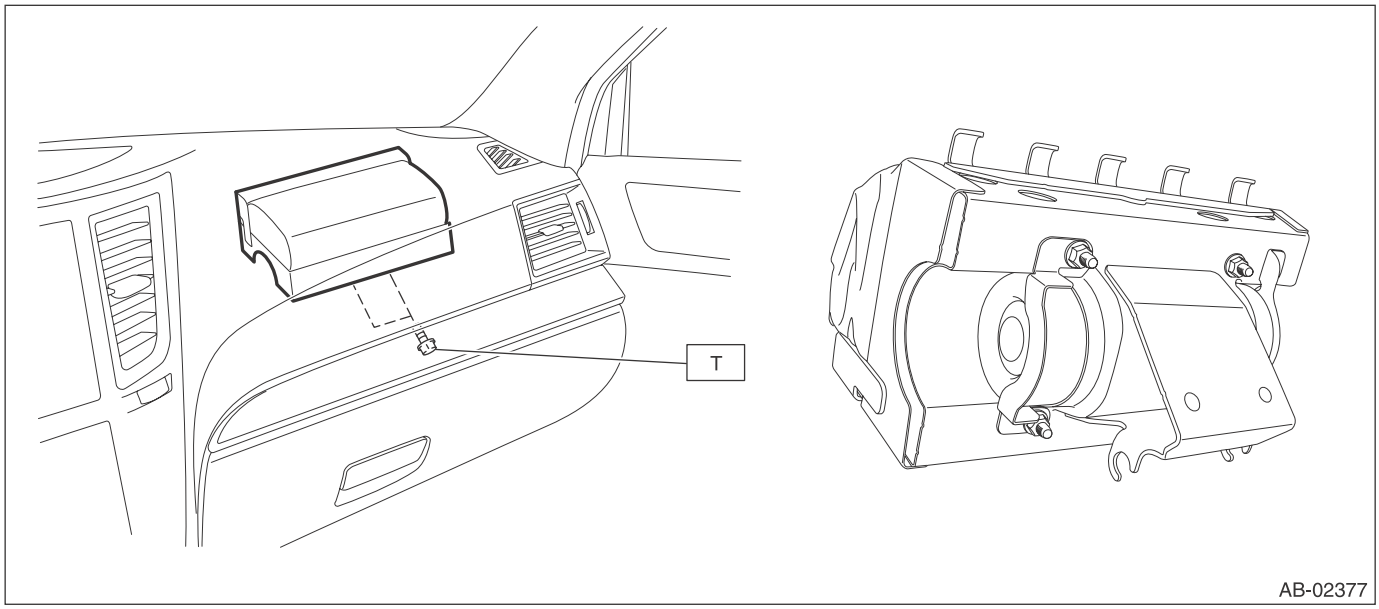

Tightening torque:
7.5 N·m (0.76 kgf-m, 5.5 ft-lb)

3. SIDE AIRBAG MODULE

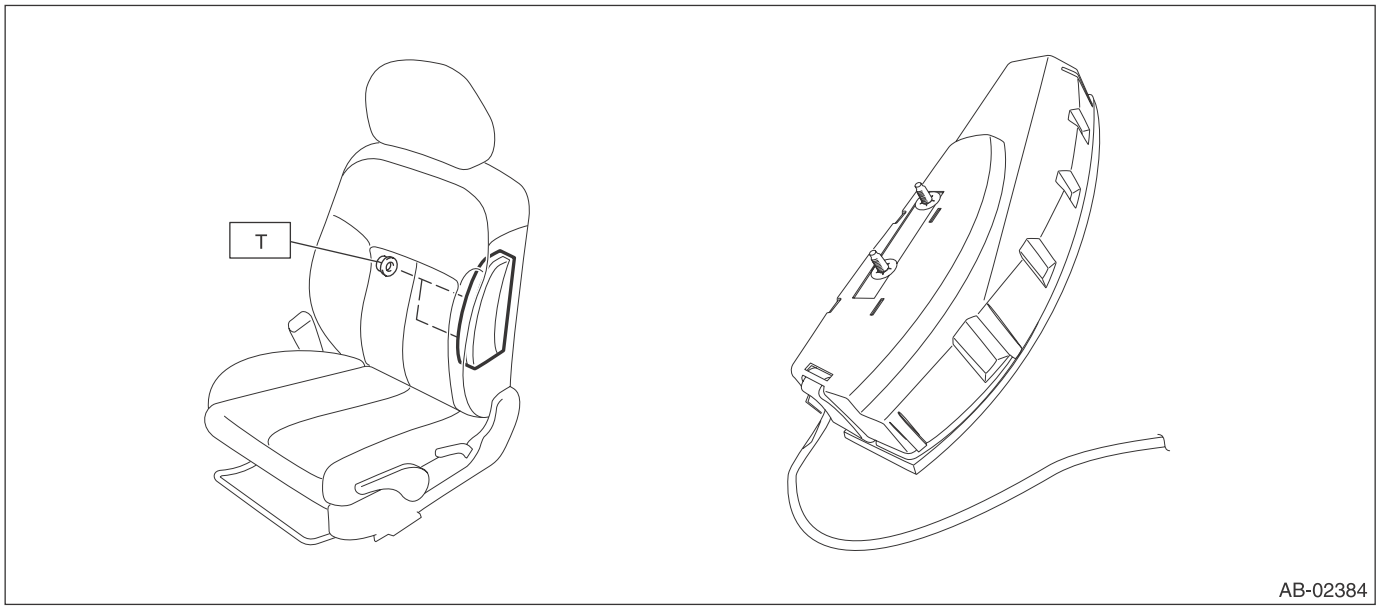

Tightening torque:
6 N·m (0.61 kgf-m, 4.4 ft-lb)

4. CURTAIN AIRBAG MODULE

- Sedan model

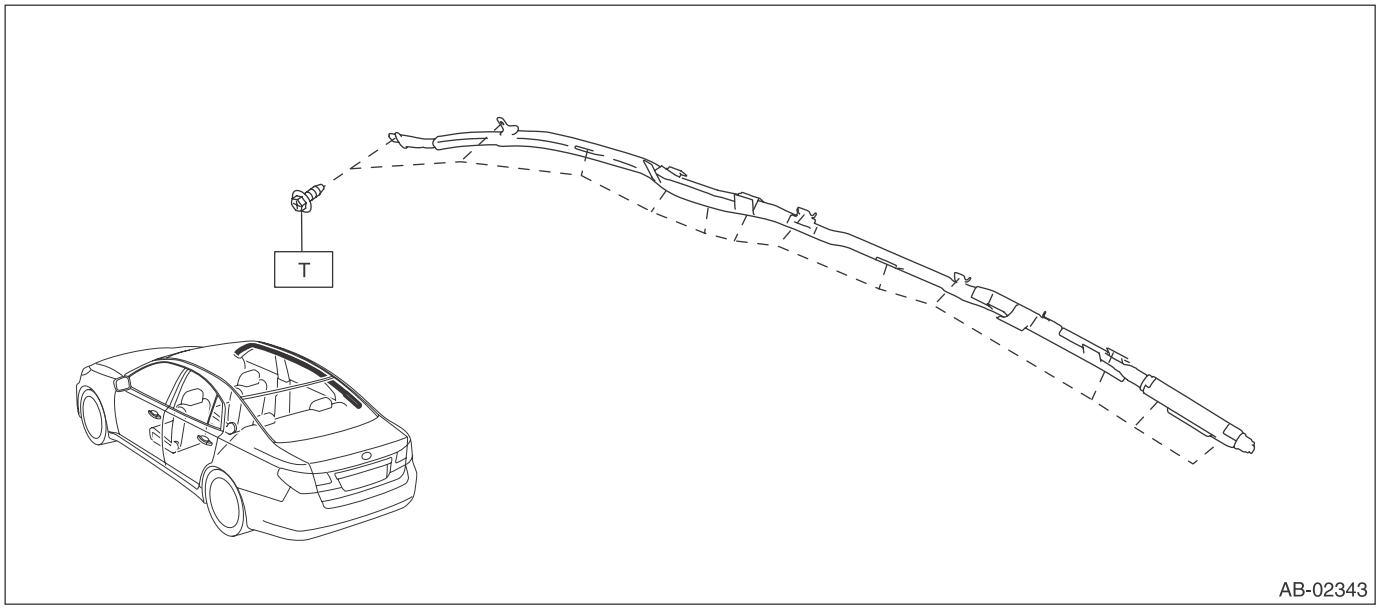

- OUTBACK model

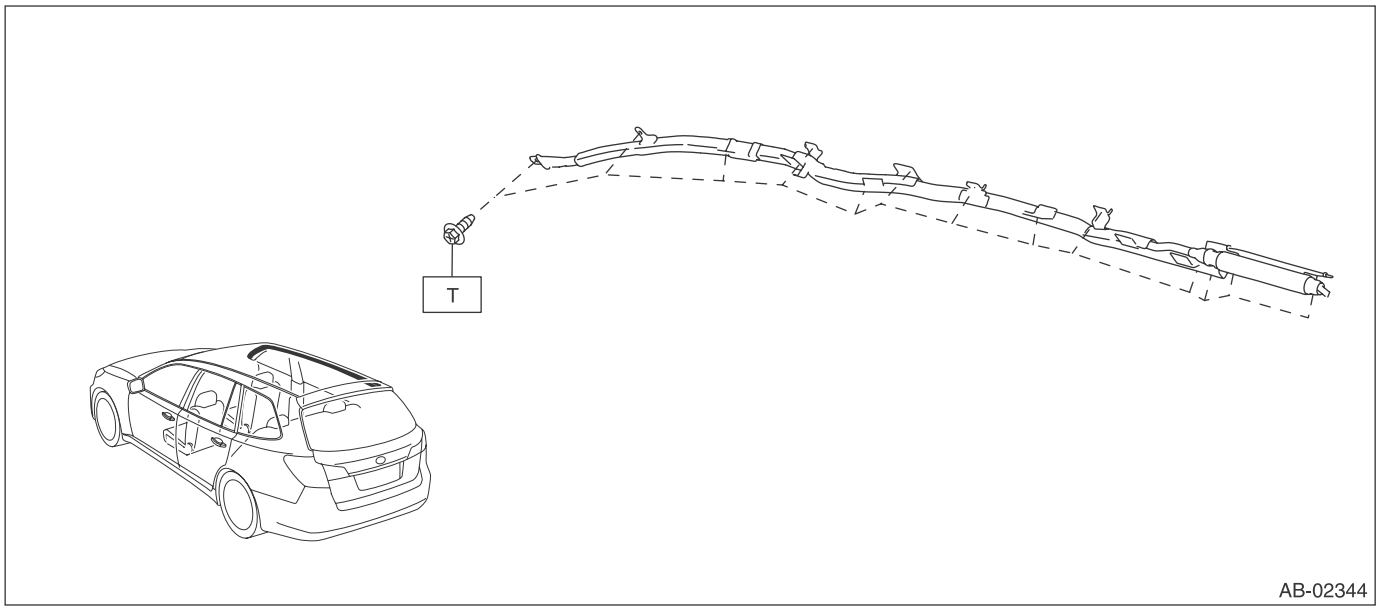

Tightening torque:
7.5 N·m (0.76 kgf-m, 5.5 ft-lb)

5. AIRBAG CONTROL MODULE

CAUTION:
Do not reuse mounting bolts and nuts.

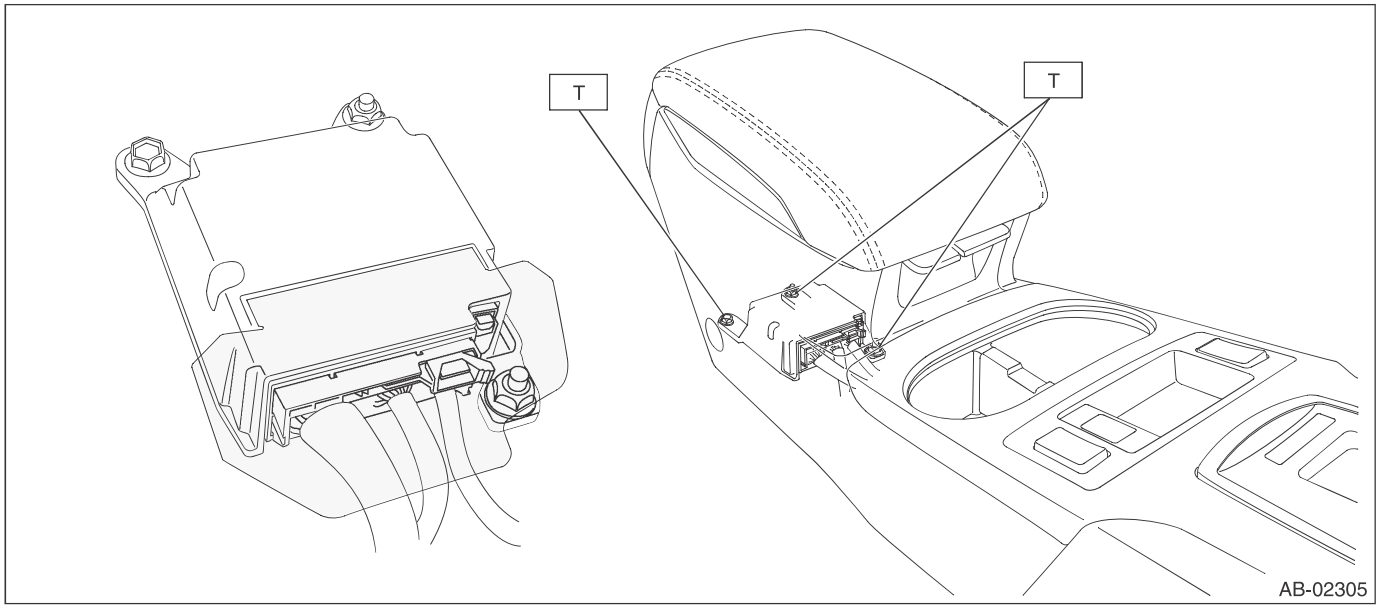

Tightening torque:
25 N·m (2.55 kgf-m, 18.4 ft-lb)

6. FRONT SUB SENSOR

CAUTION:
Do not reuse mounting bolts and nuts.

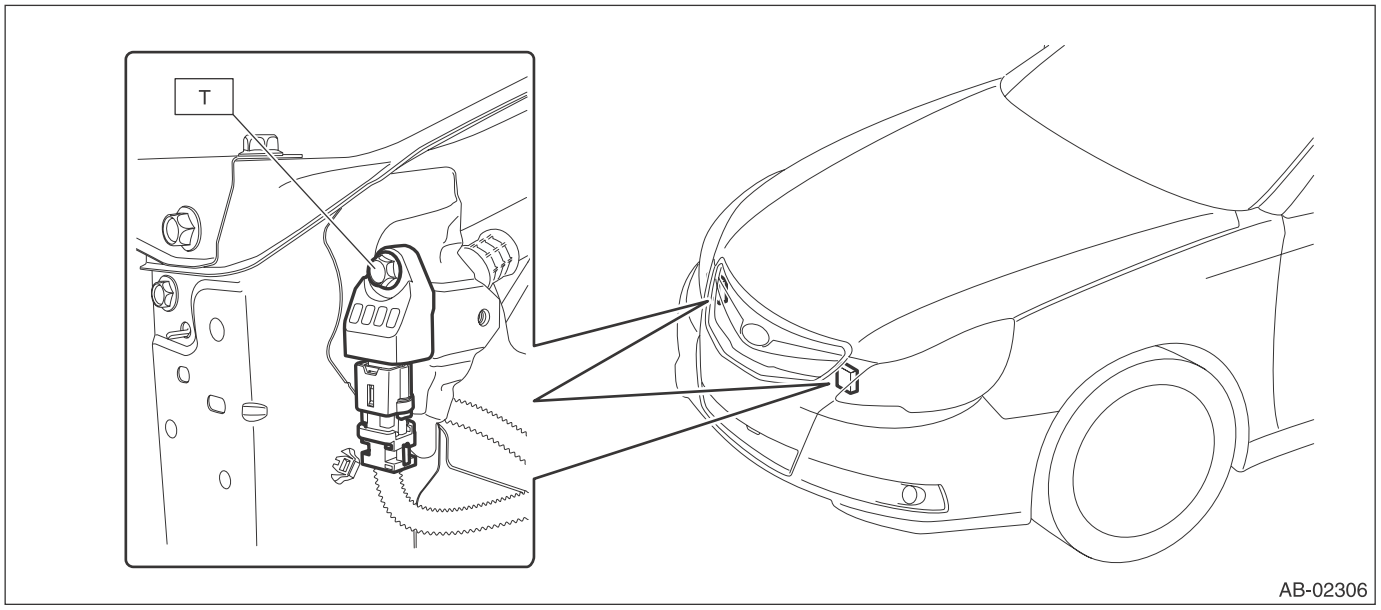

Tightening torque:
13 N·m (1.33 kgf-m, 9.6 ft-lb)

7. SIDE AIRBAG SENSOR

CAUTION:
Do not reuse mounting bolts and nuts.

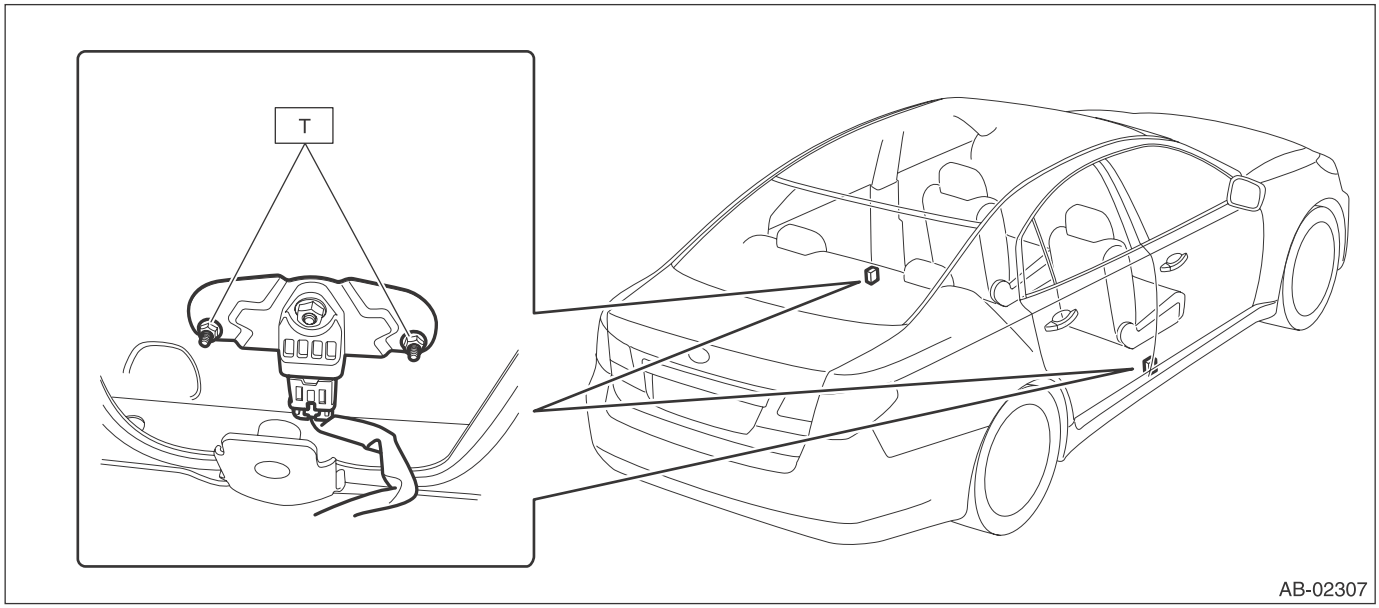

Tightening torque:
7.5 N·m (0.76 kgf-m, 5.5 ft-lb)

8. CURTAIN AIRBAG SENSOR

CAUTION:
Do not reuse mounting bolts and nuts.

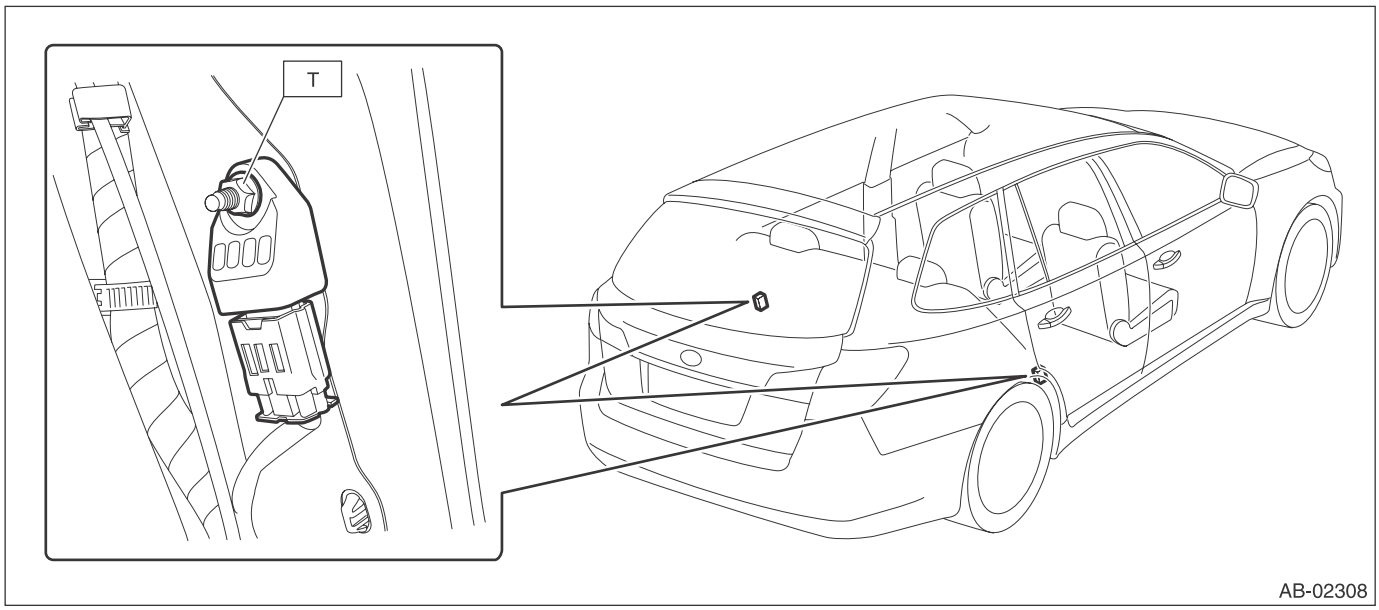

Tightening torque:
7.5 N·m (0.76 kgf-m, 5.5 ft-lb)

9. STEERING ROLL CONNECTOR

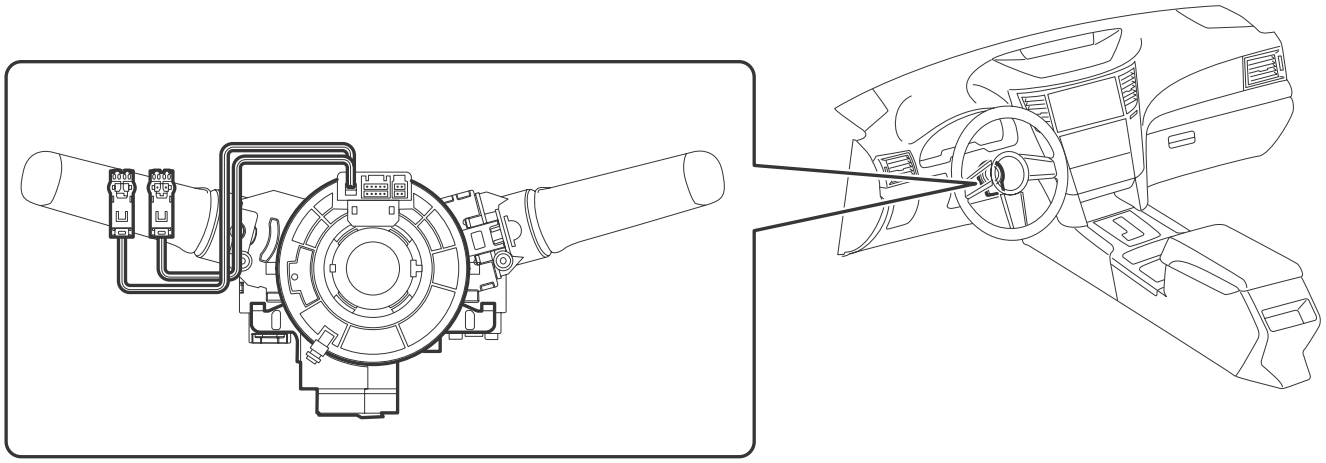

B: CAUTION

1. BEFORE STARTING ALL WORKS

• The airbag system is fitted with a backup power supply. After disconnecting the battery ground cable, the airbag may operate if you do not wait for 60 seconds or more before starting the service of airbag system.

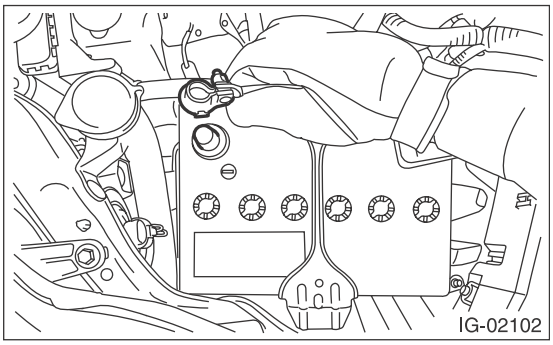

• When servicing a vehicle, be sure to turn the ignition switch to OFF, disconnect the ground cable from battery, and wait for 60 seconds or more before starting work.
• Once the airbag warning light lights up, immediately inspect or repair the vehicle. Otherwise, the airbag system may malfunction.
• Do not allow water or oil to come in contact with the connector terminals. Also, do not touch the connector terminals directly.

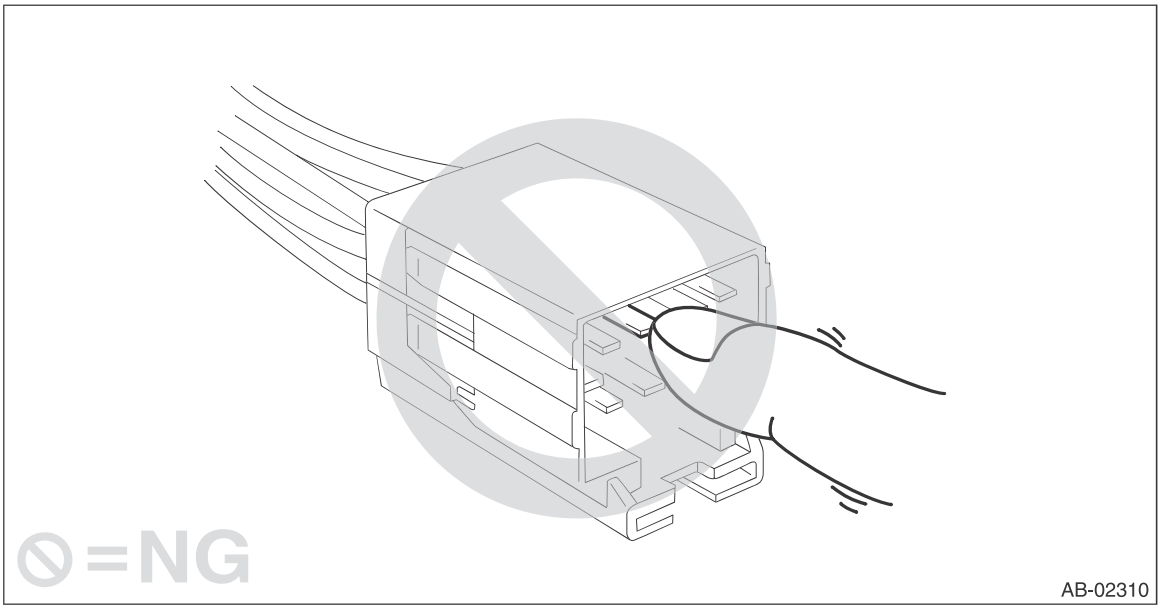

• If damage, open circuit or rust is found on airbag system wiring harness, do not repair the harness. Always replace the faulty harness with a new genuine part.

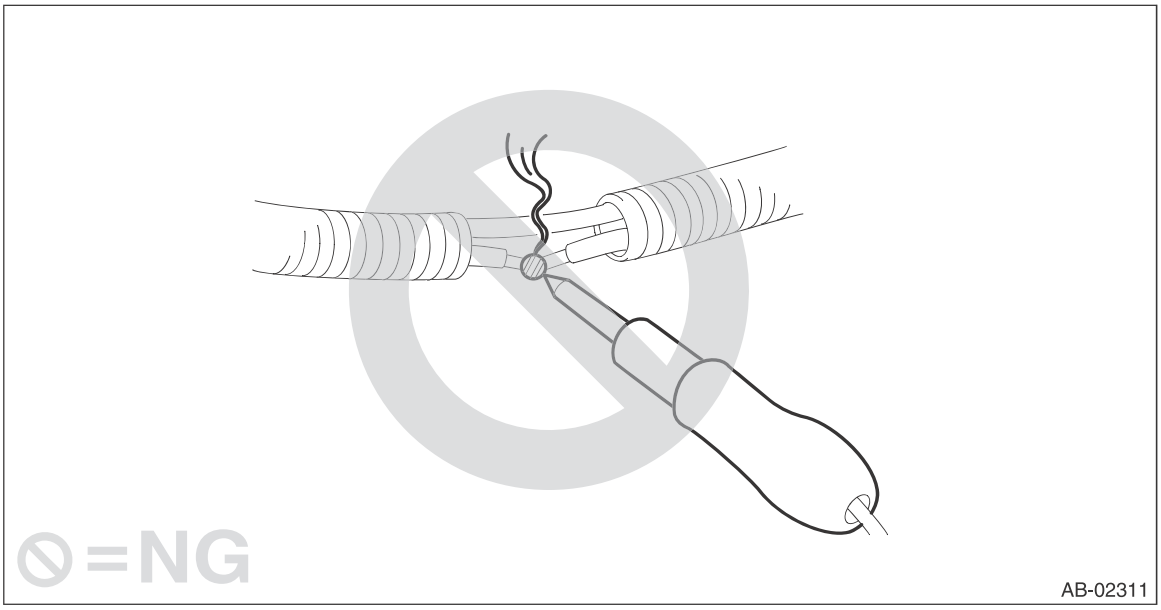

• When painting or performing sheet metal work on the front part of the vehicle, including the front wheel apron, front fender and radiator panel side, remove the front sub sensors and wiring harness of airbag system.
• When painting or performing sheet metal work on the side of the vehicle, including the side sill, center pillar and front and rear doors, remove the side airbag sensors, curtain airbag sensor, and wiring harness of the airbag system.

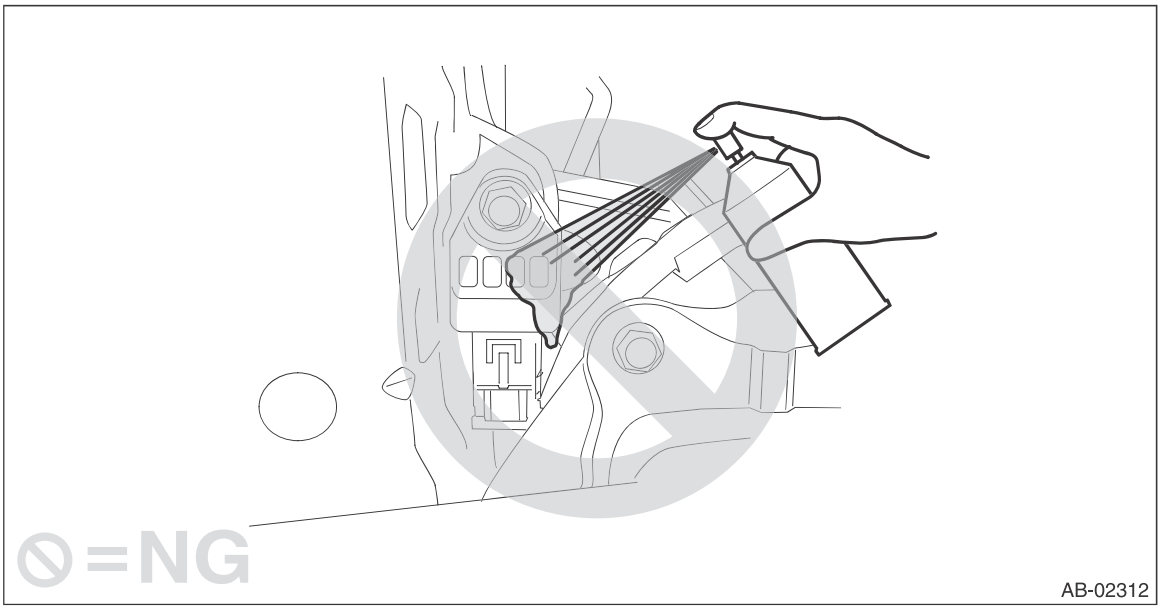

• When installing steering wheel and steering roll connector, be sure to adjust the steering roll connector.

2. BEFORE STARTING PARTS REPLACEMENT

• If airbag sensors, airbag module, airbag control module, pretensioners, or harnesses are deformed or damaged, replace with new parts.

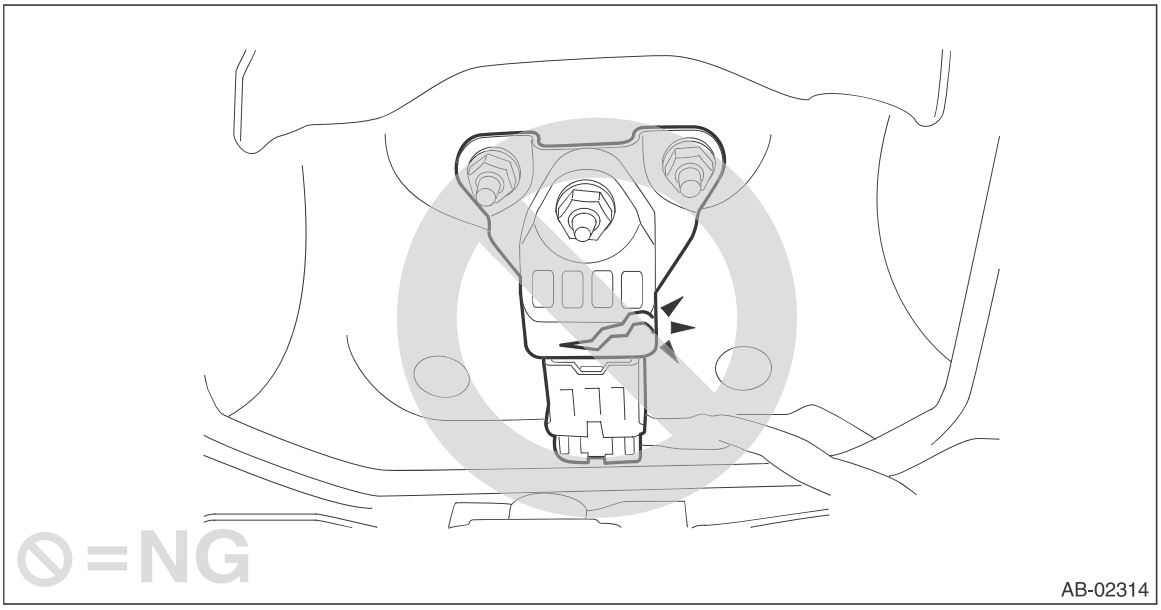

• Install the wiring harness securely with the specified clips to avoid interference or tangled with other parts.

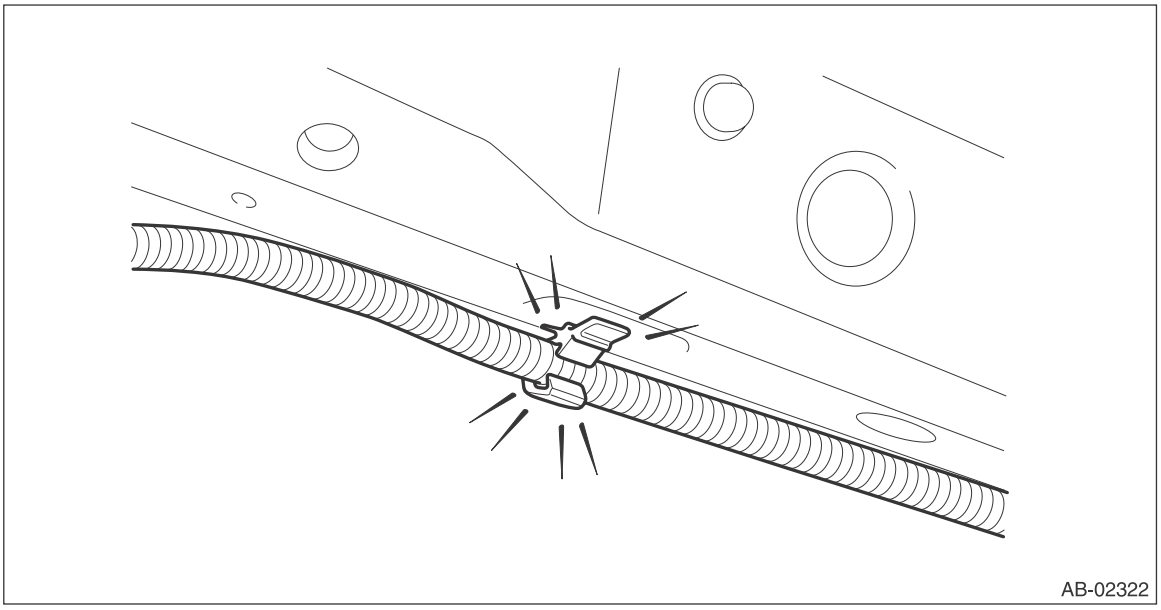

• Do not use the airbag or pretensioner parts from other vehicles. Always replace the defective parts with new parts.
• Never reuse any activated airbag module and pretensioner.
• Do not discard undeployed airbag or pretensioner.
• When airbag control module, front sub sensor, side airbag sensor and curtain airbag sensor are removed, do not reuse the bolts and nuts of them. Always use new bolts and nuts for them.
• When installing steering wheel and steering roll connector, be sure to adjust the steering roll connector.

• After removal of each parts for airbag system, keep them with the pad facing upward on a dry, clean and flat surface without heat, light sources, moisture and dust.

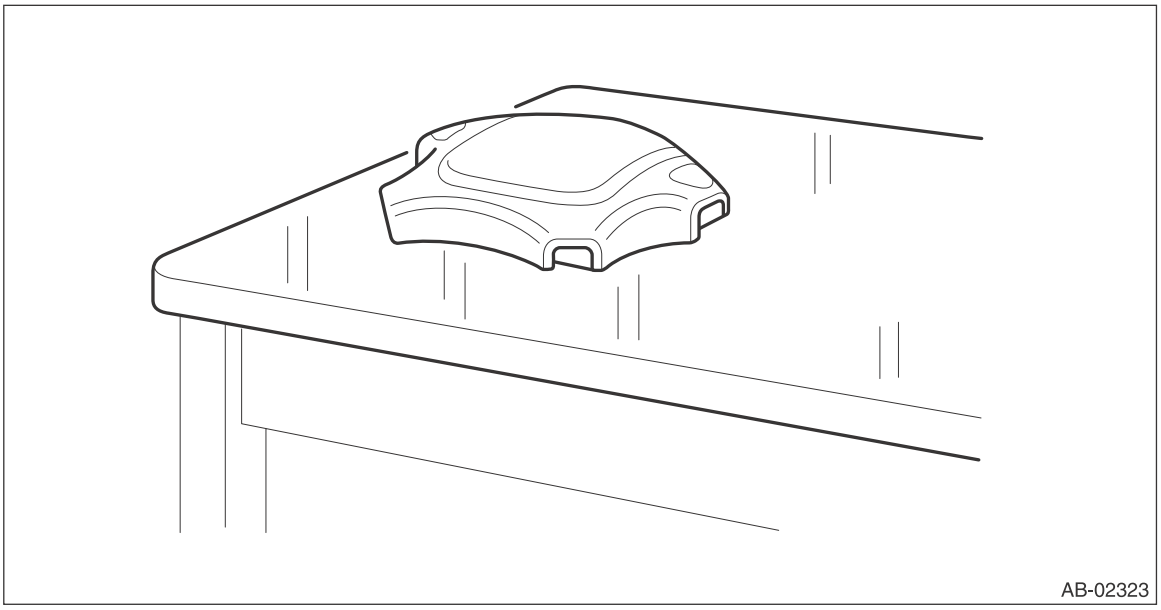

• Do not drop any airbag component, store them under high temperature of 85°C (185°F) or more, or let water, oil or grease get on them; the internal parts may be damaged or the reliability may be greatly lowered.

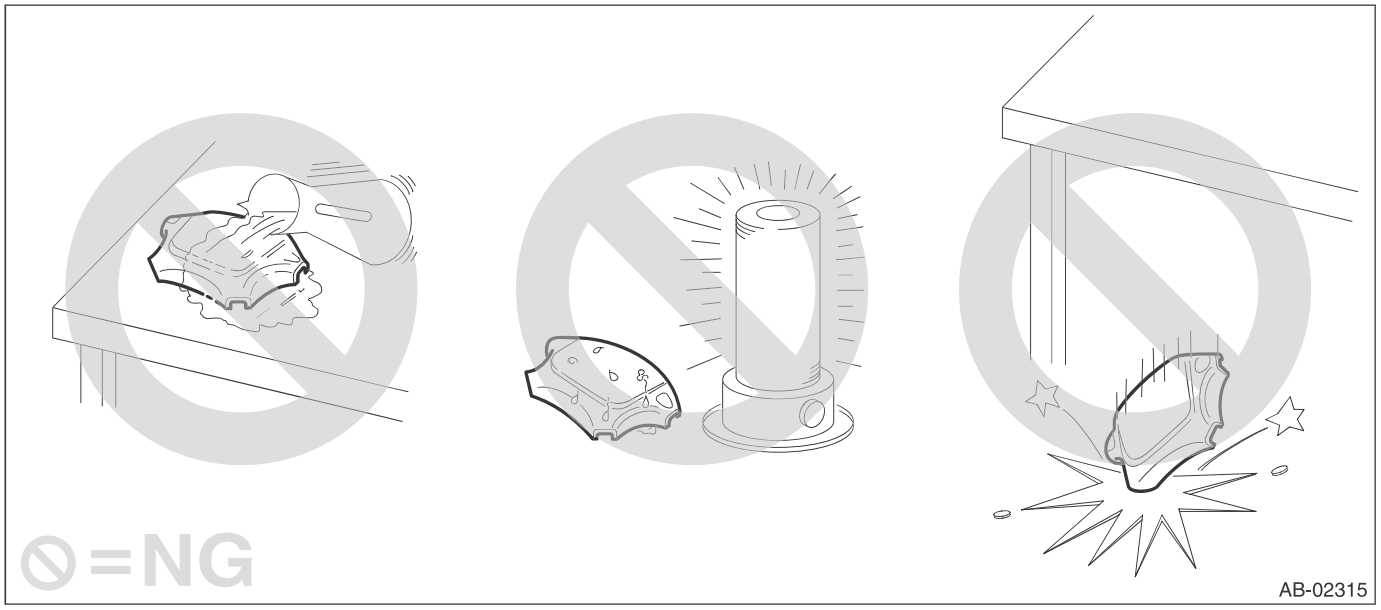

• When storing a removed airbag module, do not place it with the pad side of airbag facing downward. Do not place any objects on the airbag module. Do not pile up the airbag module. If the pad of the airbag module is in contact with other objects, it may cause a serious accident if the airbag accidentally operates.

- Driver's airbag module

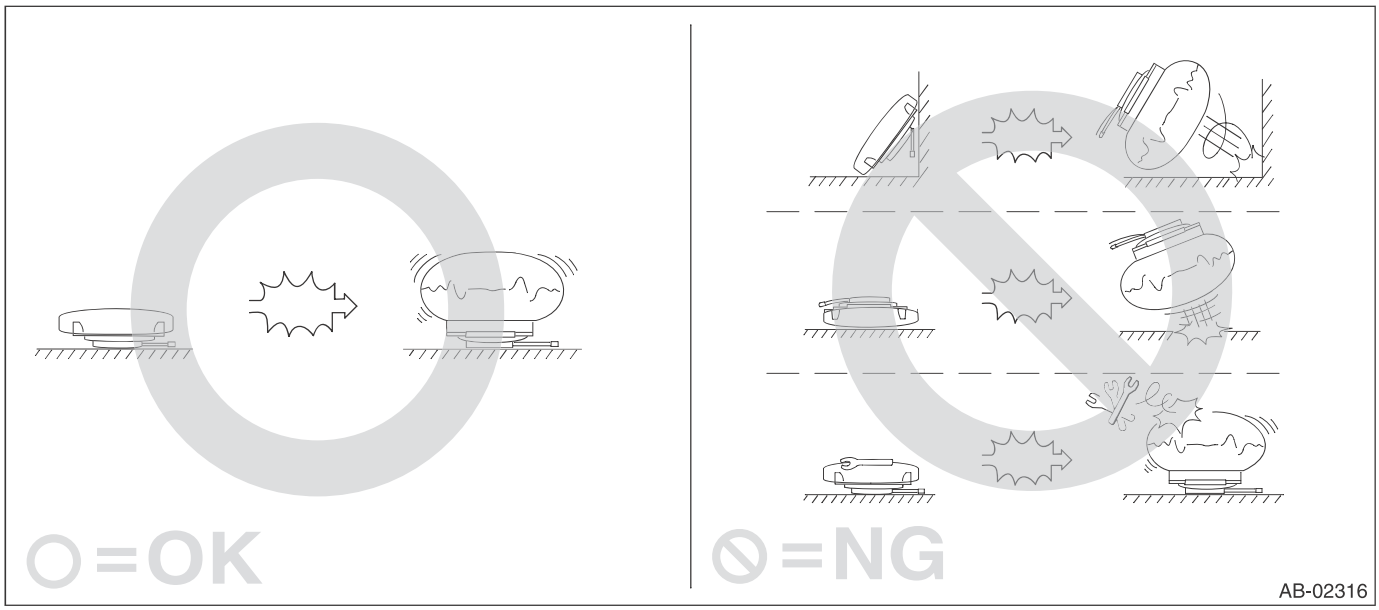

- Passenger's airbag module & side airbag module

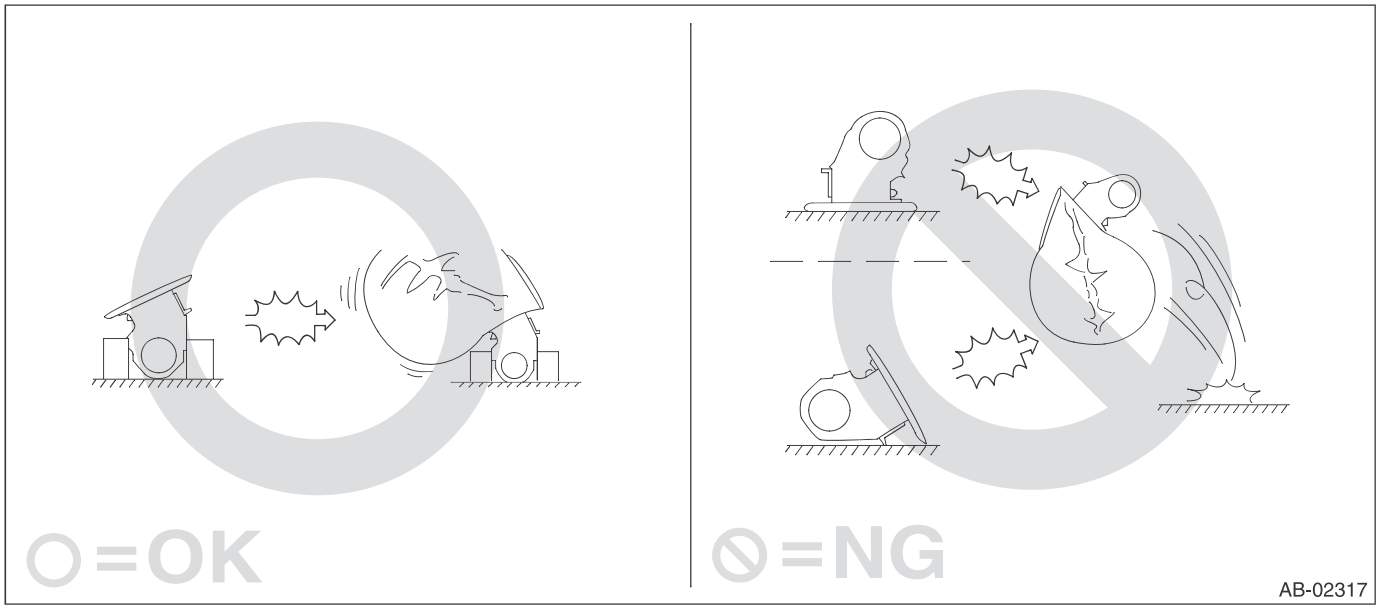

• Do not disassemble driver's airbag module, passenger's airbag module, side or curtain airbag modules, or pretensioner.

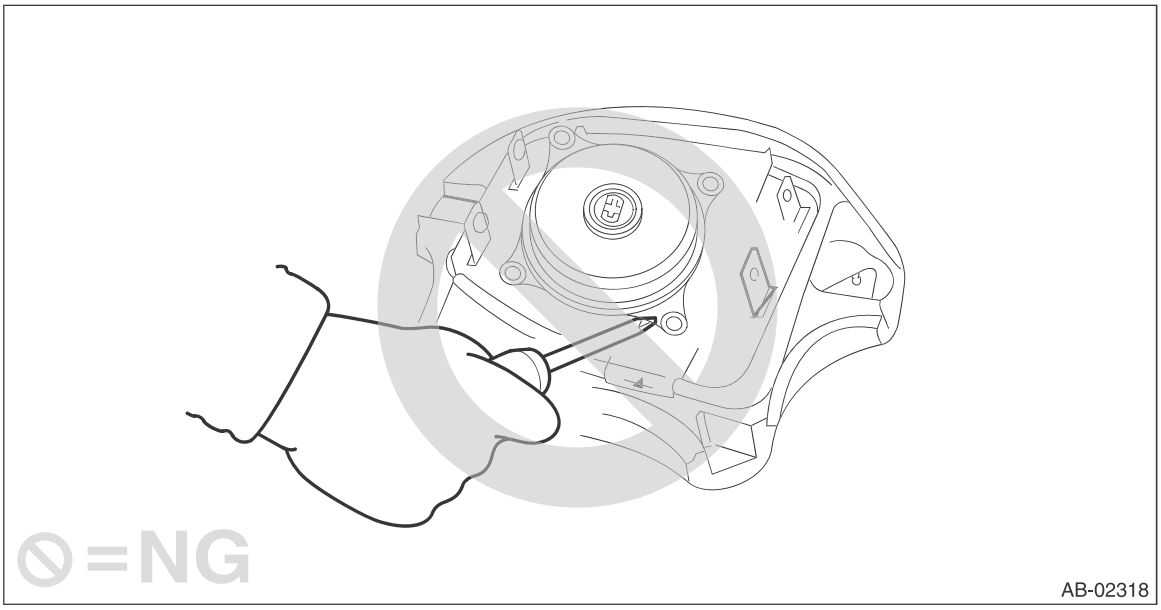

• The removed front seat with airbag module must be kept at least 200 mm (8 in) away from walls and other objects.

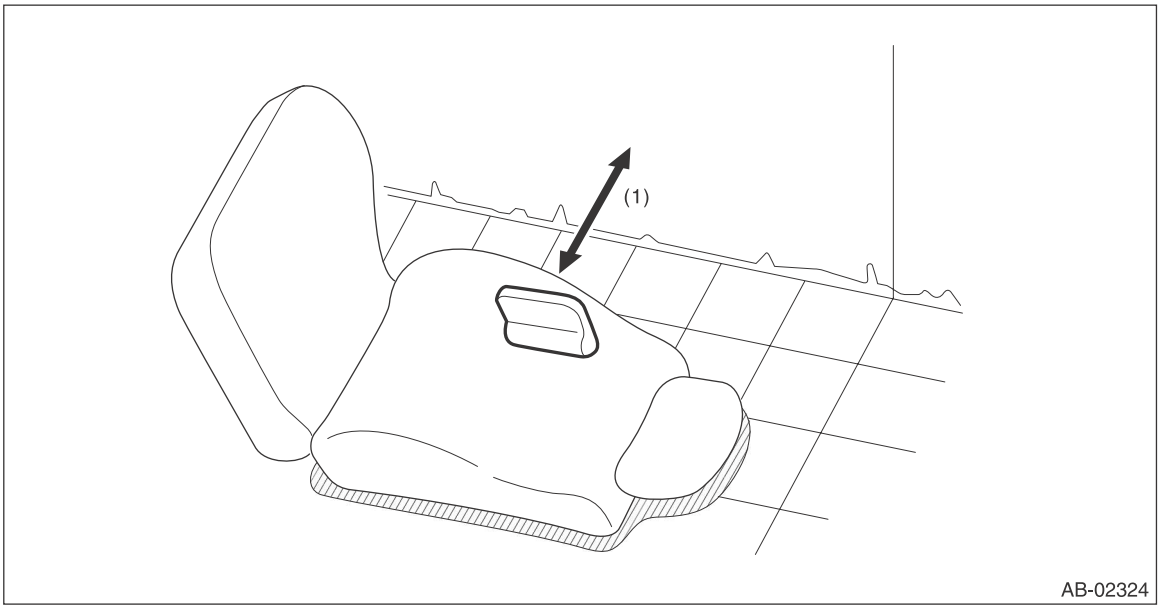

(1) 200 mm (8 in) or more

3. BEFORE STARTING TROUBLESHOOTING

• Even if any part is to be replaced as the result of diagnosis, do not use airbag parts or pretensioner parts from other vehicles. Always replace the defective parts with new parts.
• When checking the airbag system, be sure to use a digital circuit tester. Use of an analog circuit tester may cause the airbag to activate erroneously due to a minimal current inside tester.

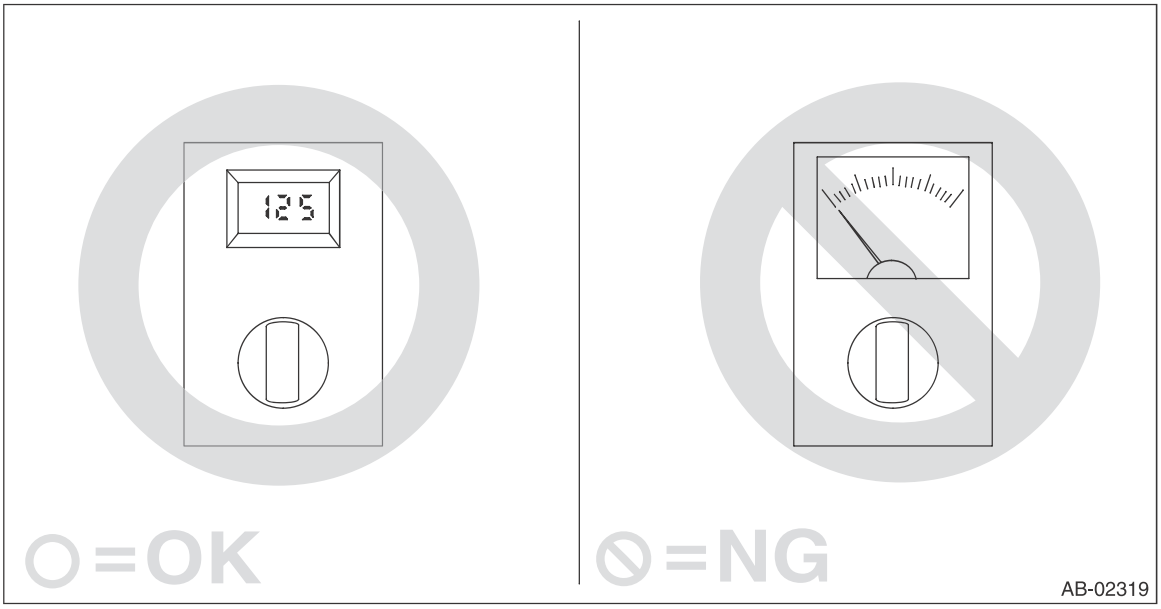

• Do not allow water or oil to come in contact with the connector terminals. Also, do not touch the connector terminals directly.

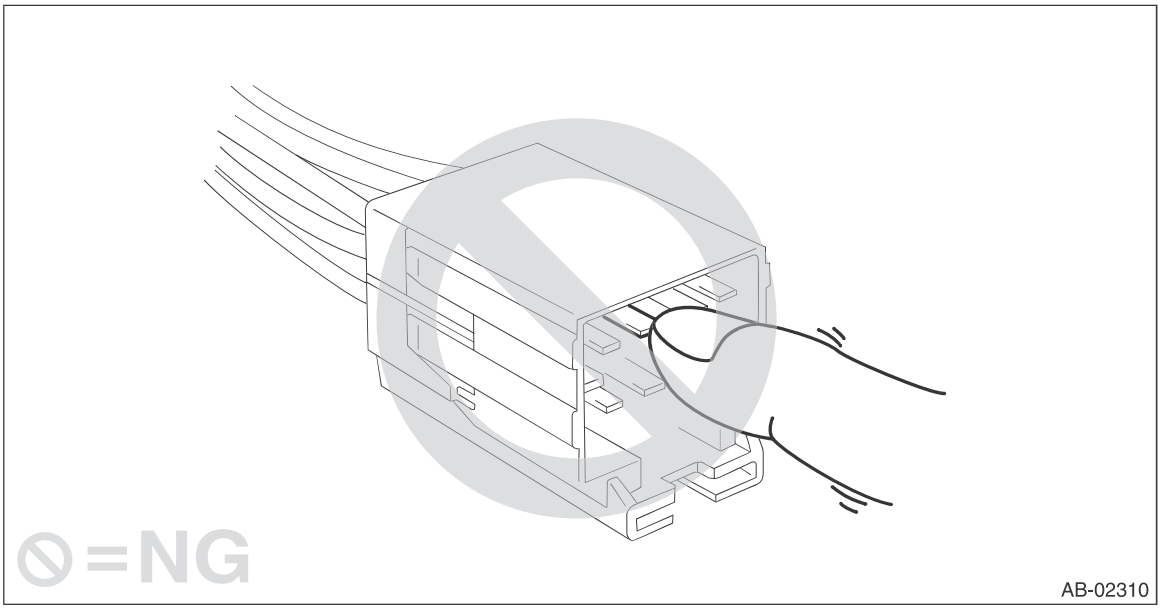

• When checking, use a test harness (1). Damage to connector terminal cause malfunction. Do not directly apply the tester probe to connector terminal of airbag.

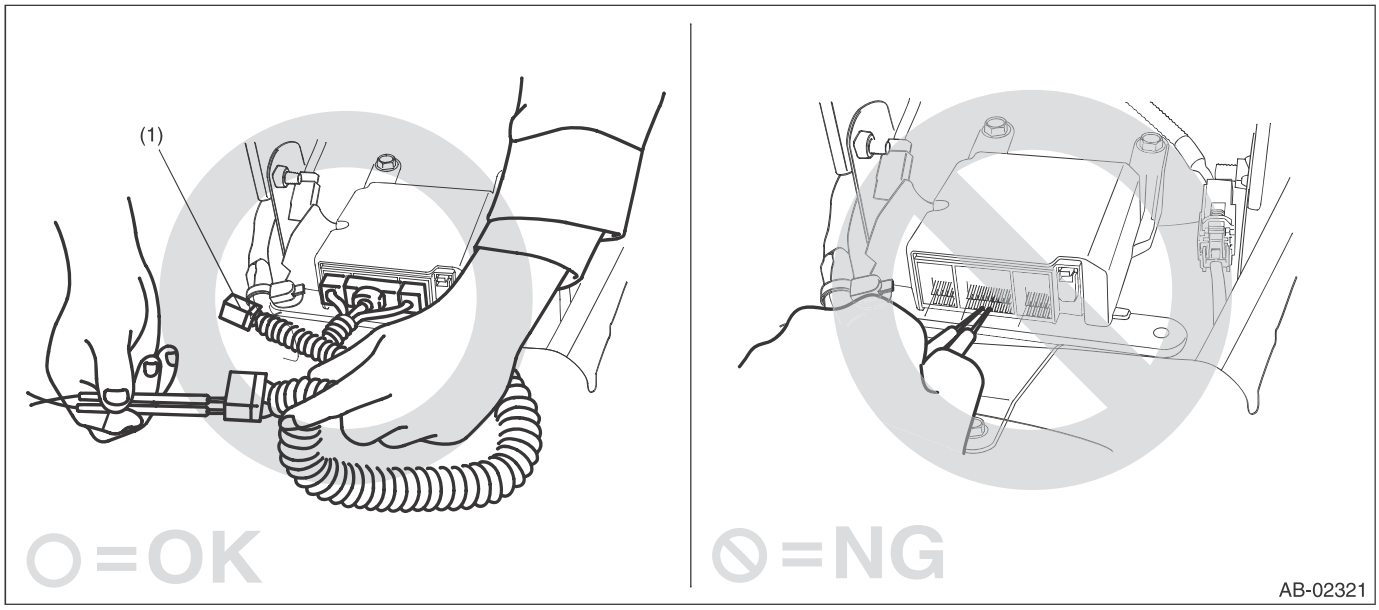

• Do not check continuity of the airbag modules for driver's side, passenger's side and curtain, or the pretensioner.

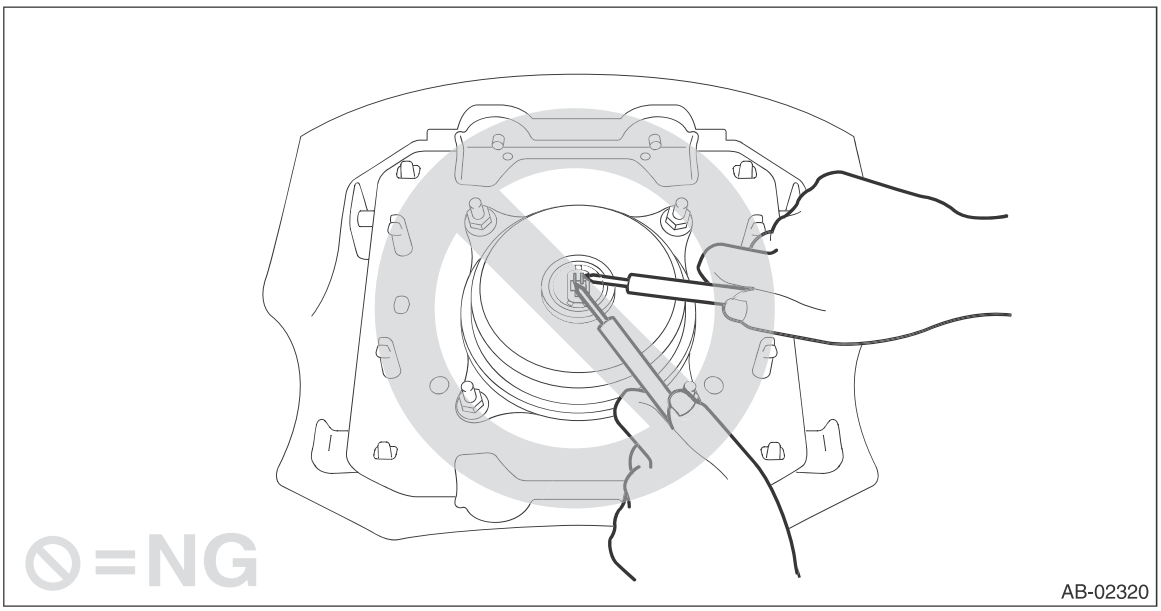

• If damage, open circuit or rust is found on airbag system wiring harness, do not repair the harness. Always replace the faulty harness with a new genuine part.

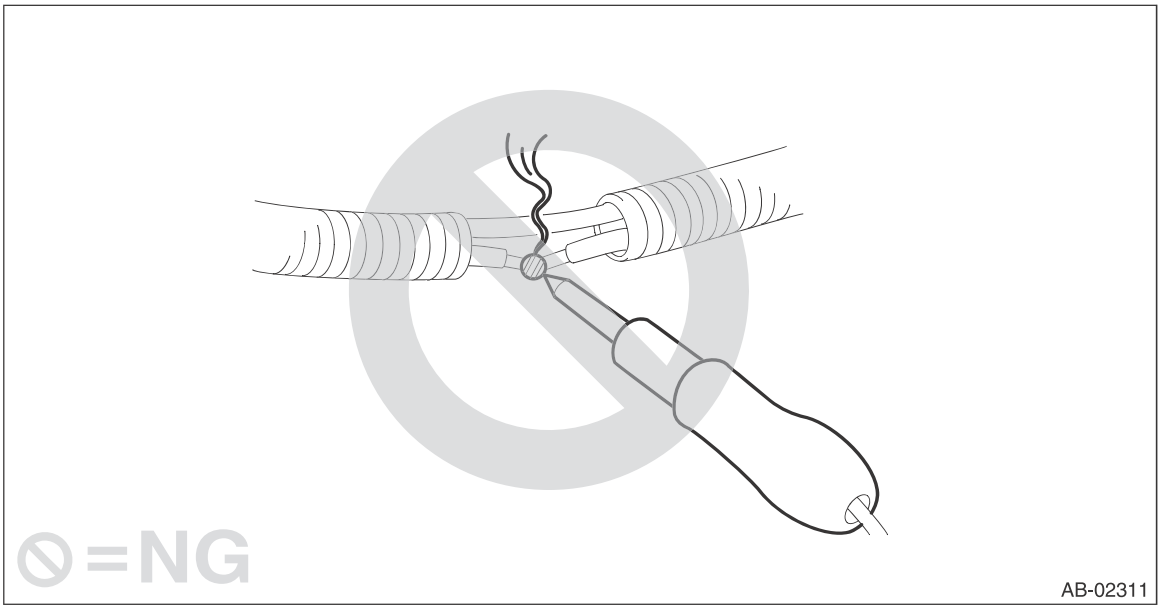

C: PREPARATION TOOL

1. SPECIAL TOOL

ILLUSTRATION	TOOL NUMBER	DESCRIPTION	REMARKS
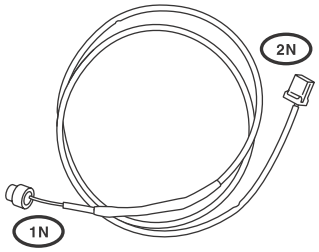 ST98299SA000	98299SA000	TEST HARNESS N	Used for unit inspection of steering roll connector.
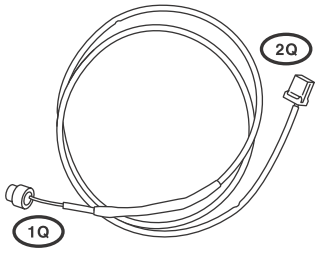 ST98299SA040	98299SA040	TEST HARNESS Q	Used for unit inspection of steering roll connector.

2. GENERAL TOOL

TOOL NAME	REMARKS
TORX® T30	Used for removing/installing driver's airbag module.
STEERING WHEEL PULLER	Used for removing the steering wheel.

2. Airbag Connector

A: PROCEDURE

1. POWER SUPPLY

1) How to disconnect:

CAUTION:
When pulling the slide lock or disconnecting connector, be sure to hold the connector, not the harness.

(1) Push the lock (A).
(2) While holding down the lock (A), disconnect the connector.

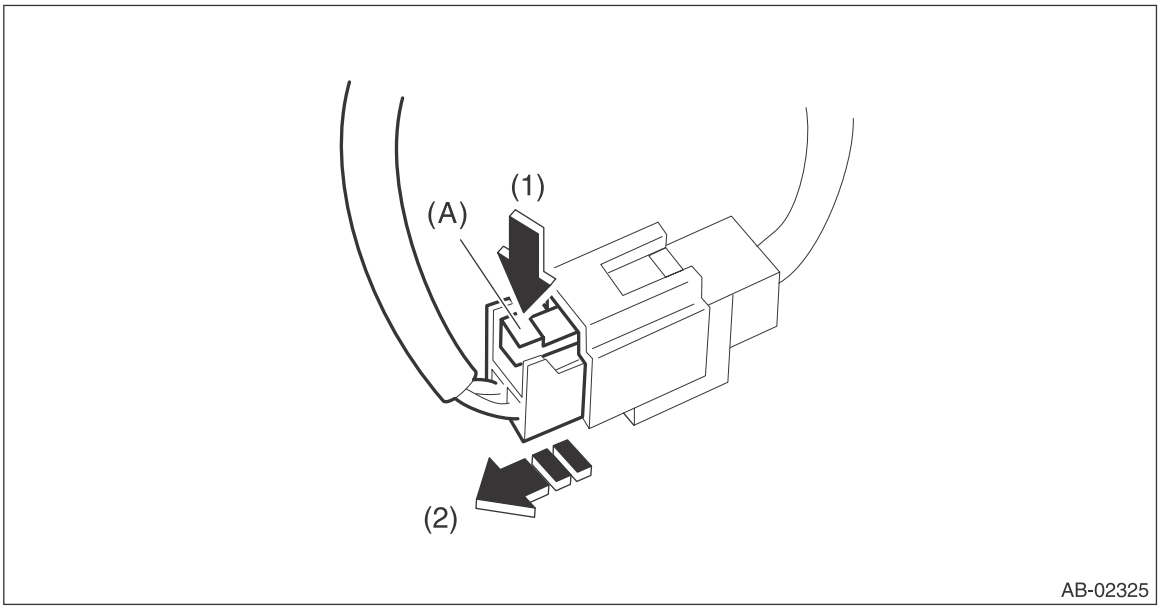

2) How to connect:

CAUTION:
Be sure to insert the connector in until it is locked. Then pull it gently to make sure that it is locked.
Holding the connector, push it in securely until a clicking sound is heard.

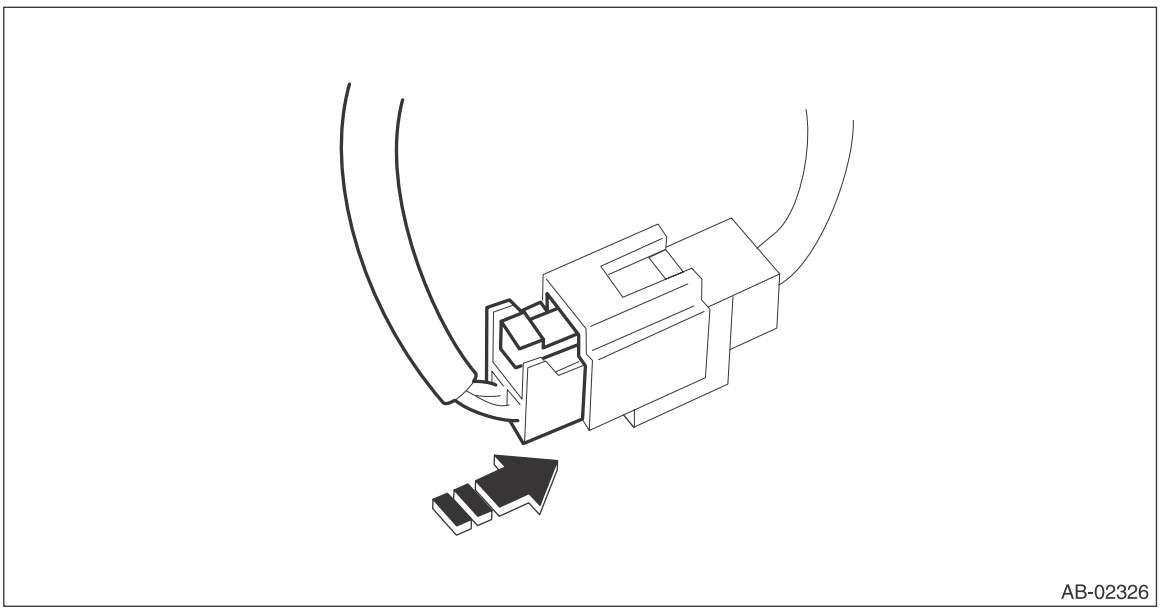

2. AIRBAG CONTROL MODULE

1) How to disconnect:
   (1) Push the lock lever plate.
   (2) While holding down the lock lever plate, pull the lever toward you.

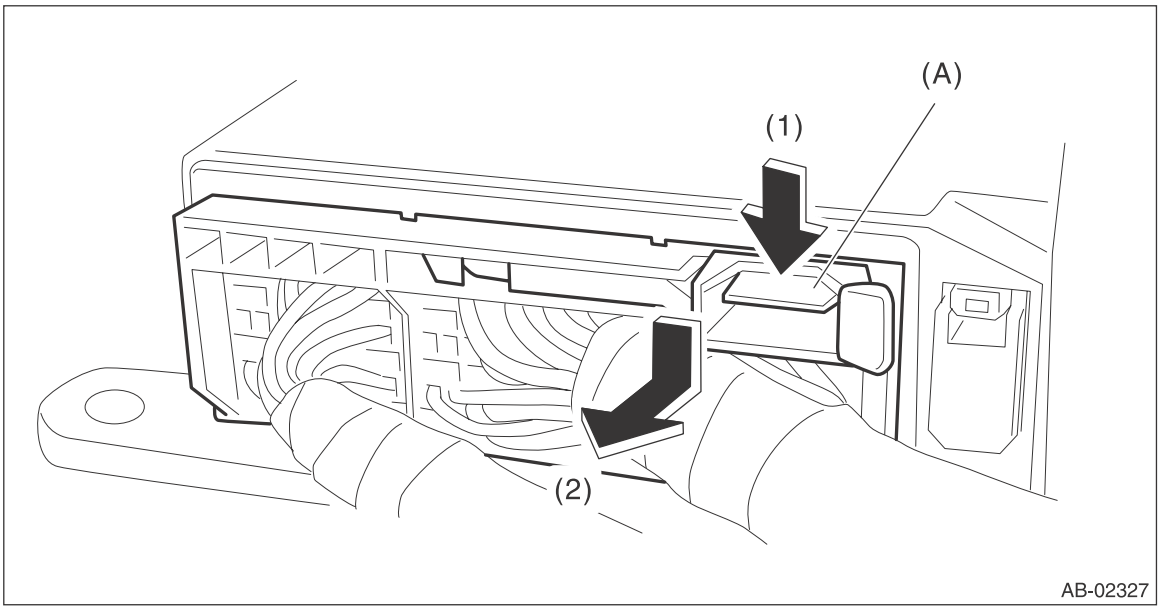

2) How to connect:

CAUTION:
Be sure to insert the connector in until it is locked. Then pull it gently to make sure that it is locked.
Insert the connector and push the lock lever in securely.

3. DRIVER'S AIRBAG MODULE (ROLL CONNECTOR)

1) How to disconnect:

CAUTION:
When pulling the slide lock or disconnecting connector, be sure to hold the connector, not the harness.

(1) Push the slide lock (A) in the direction of arrow.
(2) With the slide lock pushed, disconnect the connector.

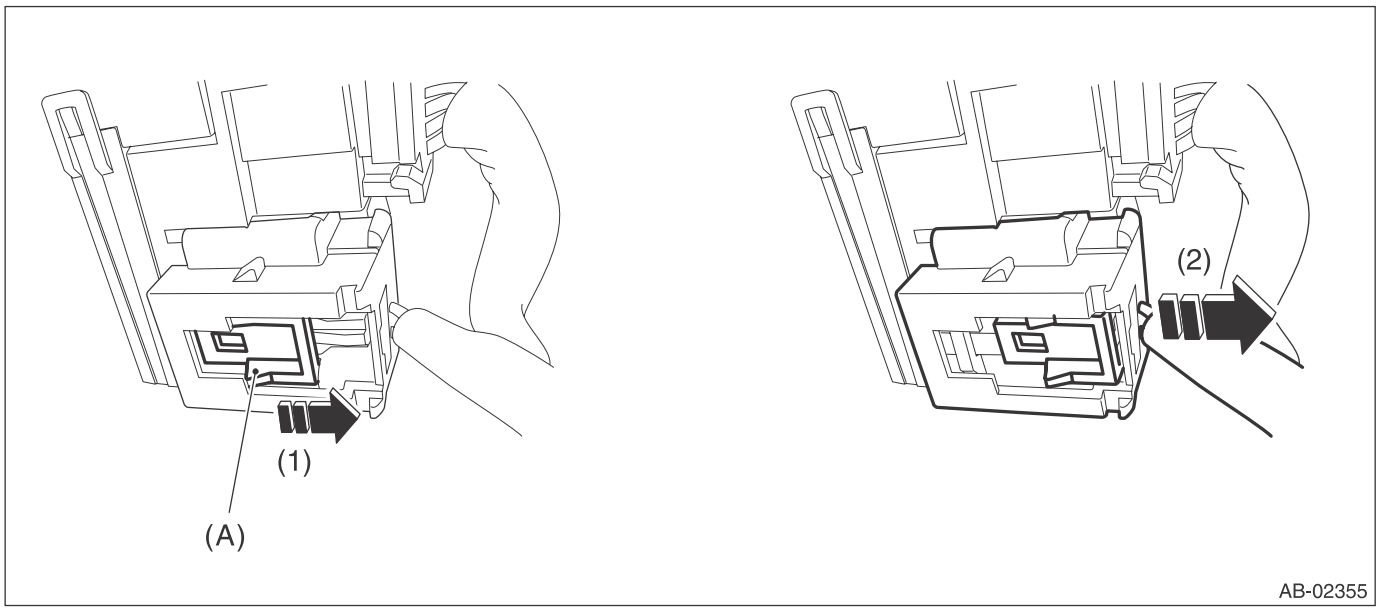

2) How to connect:

CAUTION:
Be sure to insert the connector in until it is locked. Then pull it gently to make sure that it is locked.
Holding the connector, push it in securely until a clicking sound is heard.

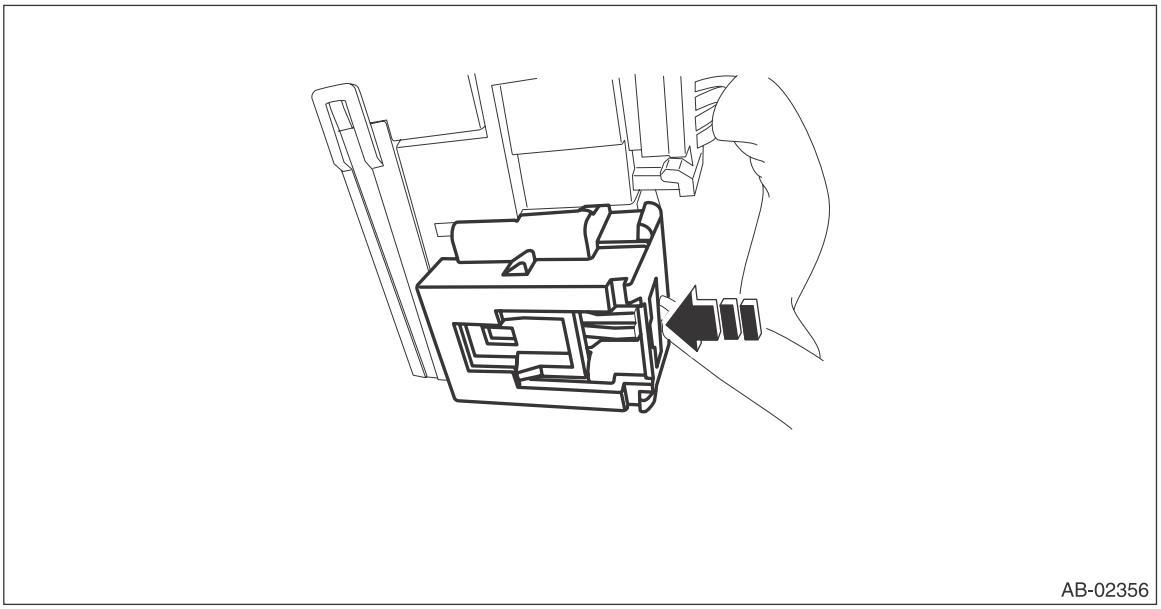

4. PASSENGER'S AIRBAG MODULE

1) How to disconnect:

CAUTION:
When pulling the slide lock or disconnecting connector, be sure to hold the connector, not the harness.

(1) Push the slide lock (A) in the direction of arrow.
(2) With the slide lock pushed, disconnect the connector.

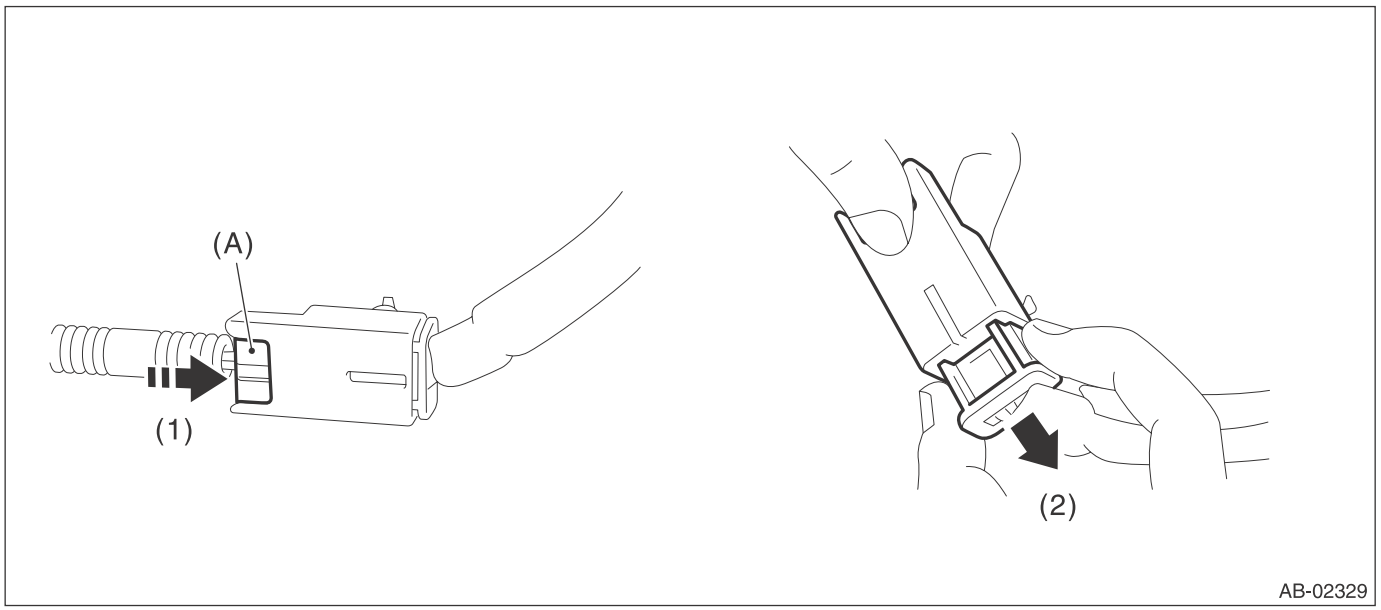

2) How to connect:

CAUTION:
Be sure to insert the connector in until it is locked. Then pull it gently to make sure that it is locked.
Holding the connector, push it in securely until a clicking sound is heard.

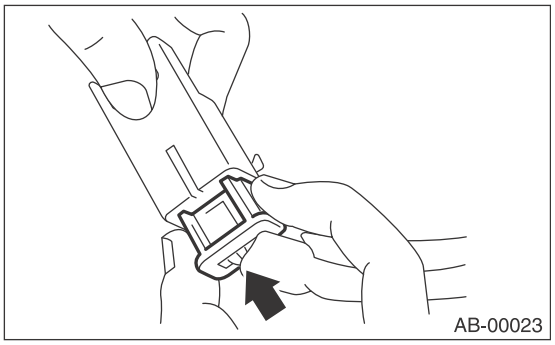

5. DRIVER'S AIRBAG MODULE, CURTAIN AIRBAG MODULE & PRETENSIONER

1) How to disconnect:
   (1) Using a flat tip screwdriver, pry the push lock upward to unlock.
   (2) Pull the connector to disconnect from the driver's airbag module assembly or the retractor assembly.

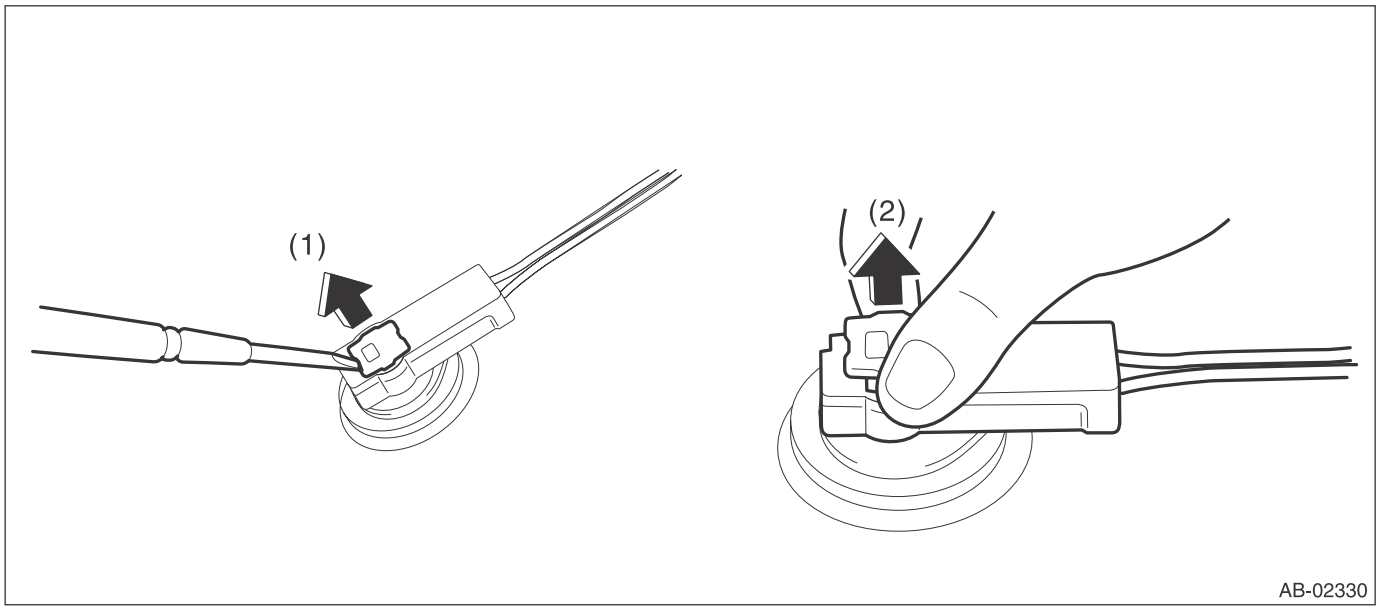

2) How to connect:

CAUTION:
- **Be sure to insert the connector in until it is locked.**
- **Be sure to push the push lock in securely. Then pull it gently to make sure that it is locked.**

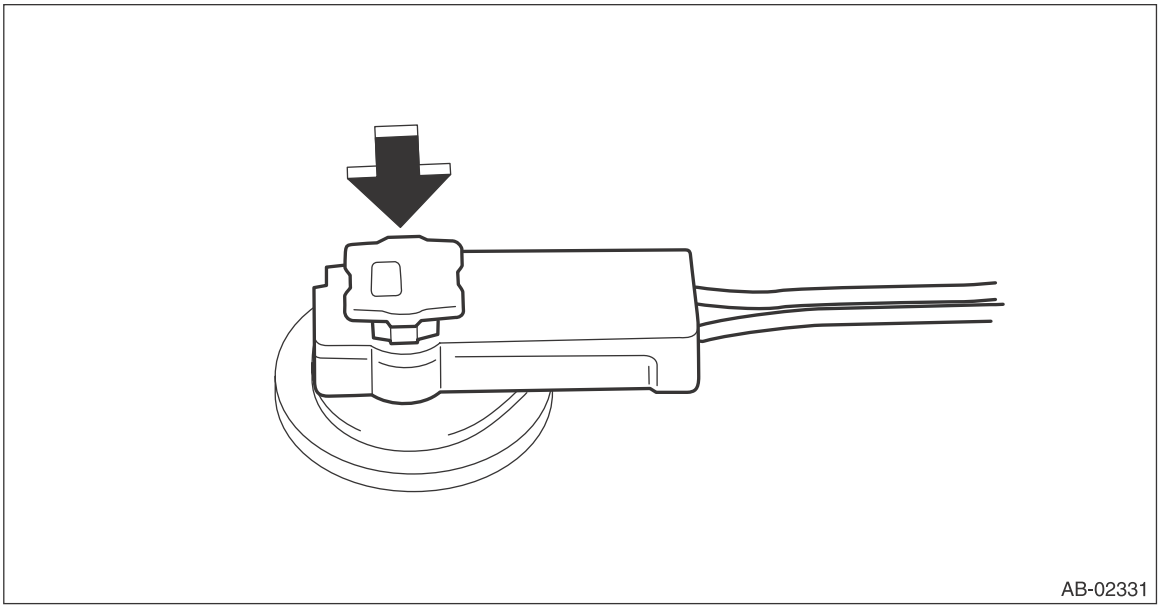

Connect the connector in the reverse order of disconnecting. At this time, be sure to insert it until a clicking sound is heard.

6. FRONT SUB SENSOR, SIDE AIRBAG SENSOR, CURTAIN AIRBAG SENSOR

1) How to disconnect:

CAUTION:
When pulling the slide lock or disconnecting connector, be sure to hold the connector, not the harness.
Holding outer part (A), pull it in the direction of arrow.

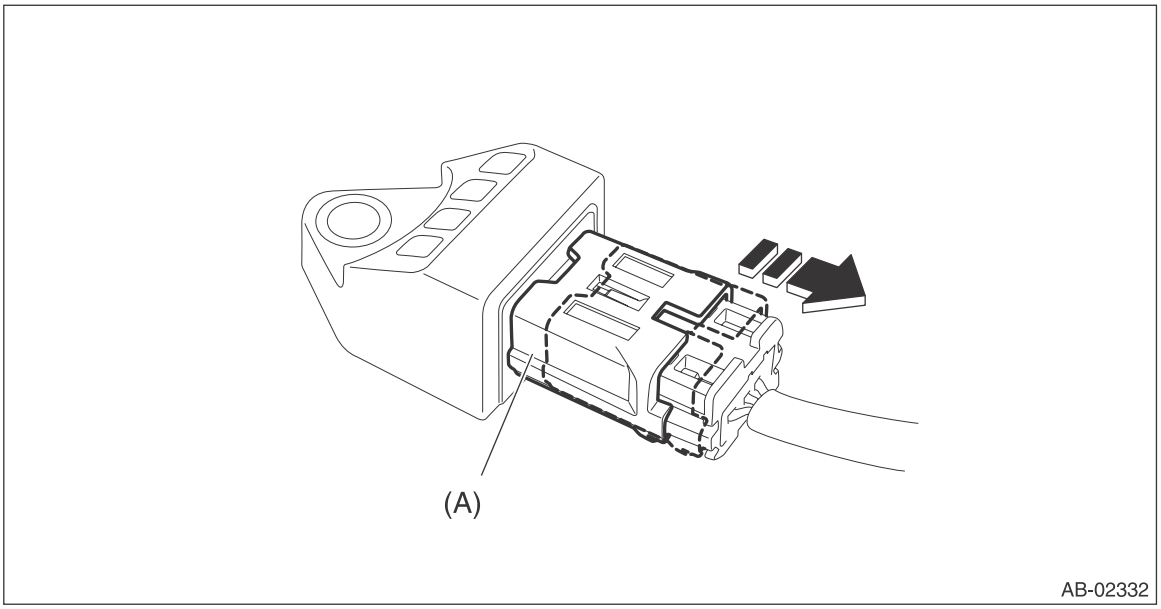

2) How to connect:

CAUTION:
- **Do not touch the outer side section or else the outer side (A) will move back.**
- **Be sure to insert the connector in until it is locked. Then pull it gently to make sure that it is locked.**

Holding the connector, push it in securely until a clicking sound is heard.

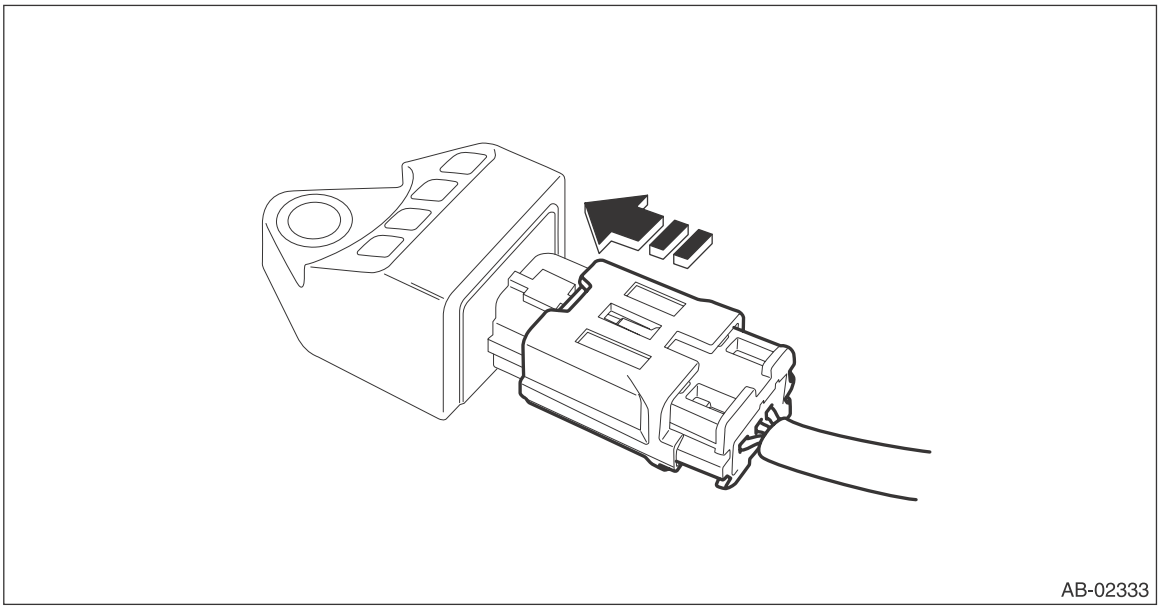

7. SIDE AIRBAG MODULE

1) How to disconnect:

CAUTION:
When pulling the slide lock or disconnecting connector, be sure to hold the connector, not the harness.

(1) Move the slide lock (A) in the direction of arrow and hold it.
(2) While holding the slide lock (A) in place, pull the connector (B) to the direction of arrow.

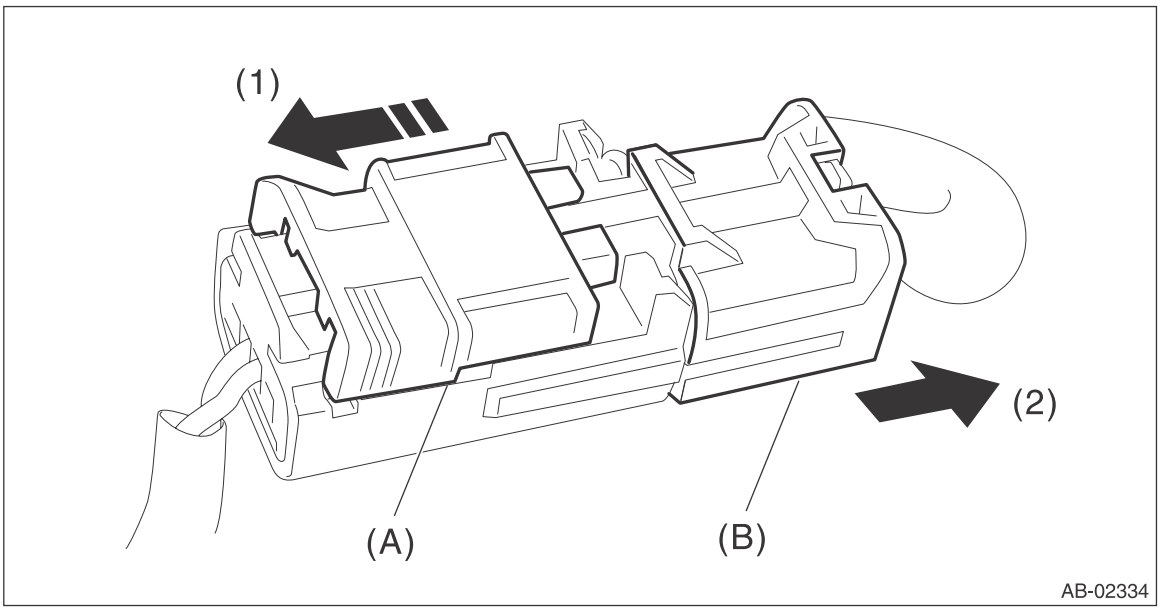

2) How to connect:

CAUTION:
Be sure to insert the connector in until it is locked. Then pull it gently to make sure that it is locked.
Holding the connector, push it in securely until a clicking sound is heard.

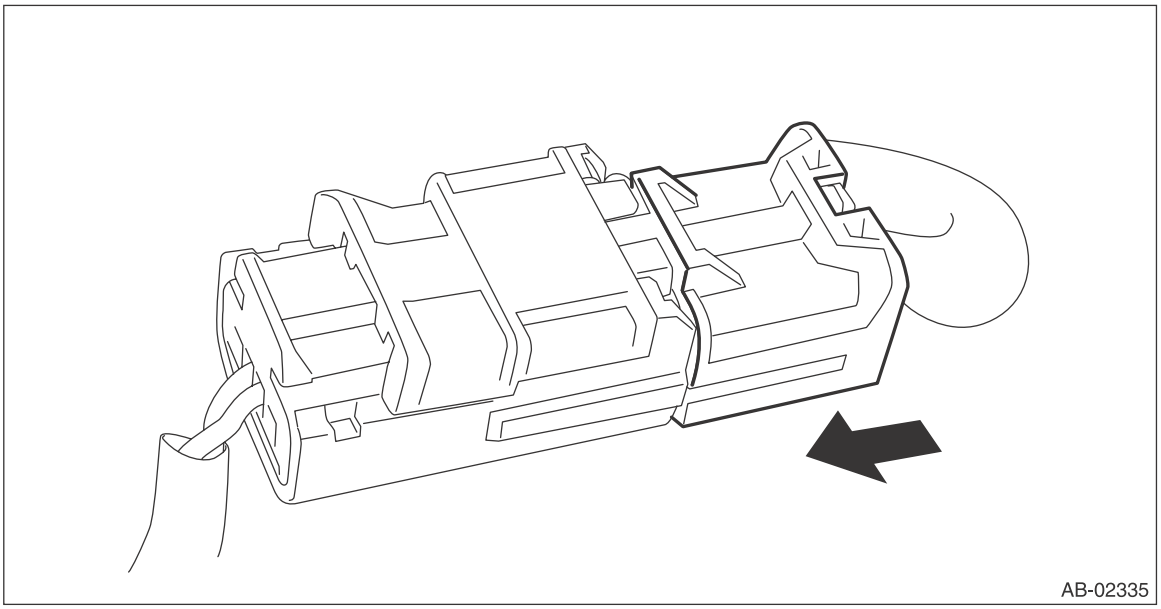

8. BUCKLE SWITCH RH

1) How to disconnect:

CAUTION:
When pulling the slide lock or disconnecting connector, be sure to hold the connector, not the harness.

(1) Move the slide lock (A) in the direction of arrow and hold it.
(2) While holding the slide lock (A) in place, pull the connector (B) to the direction of arrow.

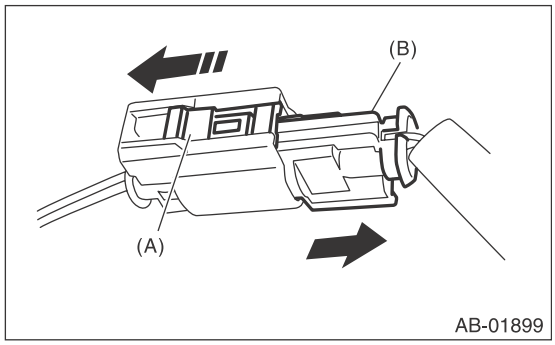

2) How to connect:

CAUTION:
Be sure to insert the connector in until it is locked. Then pull it gently to make sure that it is locked.

Holding the connector, push it in securely until a clicking sound is heard.

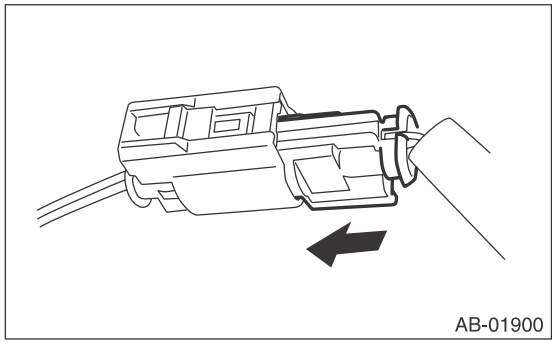

9. OCCUPANT DETECTION SYSTEM (BETWEEN AIRBAG REAR HARNESS AND SEAT HARNESS)

Refer to “Occupant Detection System”. <Ref. to OD(diag)-8, OCCUPANT DETECTION SYSTEM (BETWEEN AIRBAG REAR HARNESS AND SEAT HARNESS), PROCEDURE, Airbag Connector.>

3. Inspection Locations After a Collision

A: INSPECTION

If the vehicle is involved in a collision, even if it is a slight collision, be sure to check the following systems.

1. DRIVER'S AIRBAG MODULE

1) Frontal collision (driver's airbag module activated)

1. Replace the following parts with new ones.
   - Airbag control module
   - Driver's airbag module ASSY
   - Passenger's airbag module assembly (if deployed)
   - Curtain airbag module (if deployed)
   - Seat belt pretensioner assembly (left and right)
   - Front sub sensor (right and left)
   - Sensor cover plate (left and right)
   - Steering shaft assembly
   - Instrument panel assembly (because it is integrated with passenger's airbag module) (if passenger's airbag module is deployed)
   - Roll connector
2. Visually inspect the following items and replace any damaged part with a new one.
   - Steering wheel assembly
   - Steering support beam assembly
   - Instrument panel harness and connector on body side

2) Frontal collision (driver's airbag module not activated)

Visually inspect the following items and replace any damaged or cracked part with a new one.
Specially inspect the damage of airbag module body, mounting bracket and harness connector.

- Driver's airbag module assembly
- Passenger's airbag module assembly
- Seat belt pretensioner assembly (left and right)
- Front sub sensor (right and left)
- Sensor cover plate (left and right)
- Instrument panel assembly (because it is integrated with passenger's airbag module)

3) No frontal collision

Visually inspect the airbag modules for damage or contamination and replace any faulty part with a new one.

2. PASSENGER'S AIRBAG MODULE

1) Frontal collision (passenger's airbag module activated)

1. Replace the following parts with new ones.
   - Airbag control module
   - Driver's airbag module assembly
   - Passenger's airbag module assembly
   - Curtain airbag module (if deployed)
   - Seat belt pretensioner assembly (left and right)
   - Front sub sensor (right and left)
   - Sensor cover plate (left and right)
   - Instrument panel assembly (because it is integrated with passenger's airbag module)
   - Trim panel roof assembly (if the curtain airbag is deployed)
   - Trim panel of each pillar (if the curtain airbag is deployed)
2. Visually inspect the following items and replace any damaged part with a new one.
   - Steering support beam assembly
   - Instrument panel harness and connector on body side

2) Frontal collision (passenger's airbag module not activated)
Visually inspect the following items and replace any damaged or cracked part with a new one.
Specially inspect the damage of airbag module body, mounting bracket and harness connector.
- Driver's airbag module assembly
- Passenger's airbag module assembly
- Seat belt pretensioner assembly (left and right)
- Front sub sensor (right and left)
- Sensor cover plate (left and right)
- Instrument panel assembly (because it is integrated with passenger's airbag module)

3) No frontal collision
Visually inspect the airbag modules for damage or contamination and replace any faulty part with a new one.

3. SIDE AIRBAG MODULE

1) Side impact (side airbag activated)
1. Replace the following parts with new ones.
   - Airbag control module
   - Side airbag module assembly (collision side)
   - Side airbag sensor (collision side)
   - Curtain airbag module assembly (collision side)
   - Curtain airbag sensor (collision side)
   - Backrest pad assembly
   - Backrest frame assembly
   - Backrest cover assembly
2. Visually inspect the following items and replace any damaged part with a new one.
   - Headrest assembly
   - Headrest lock bushing
   - Outer slide rail
   - Inner slide rail
   - Seat hinge cover
   - Seat lifter lever
   - Reclining lever
   - Side airbag harness and connector on body side

2) Side impact (side airbag not activated)
Visually inspect the following items and replace any damaged or cracked part with a new one.
Specially inspect the damage of airbag module body, mounting bracket and harness connector.
- Backrest pad assembly
- Backrest frame assembly
- Backrest cover assembly
- Side airbag module assembly
- Side airbag sensor
- Curtain airbag module assembly
- Curtain airbag sensor

3) No side impact
Visually inspect the airbag modules for contamination and replace any faulty part with a new one.

4. CURTAIN AIRBAG MODULE

1) Side impact (curtain airbag activated)
1. Replace the following parts with new ones.
   - Airbag control module
   - Curtain airbag module assembly (collision side)
   - Side airbag sensor (collision side)
   - Curtain airbag sensor (collision side)
   - Roof trim
   - Each pillar trim (collision side)
   - Airbag bracket (models with sunroof) (collision side)

2. Visually inspect the following items and replace any damaged part with a new one.
   - Assist grip
   - Assist grip bracket
   - Curtain airbag harness and connector on body side.

2) Side impact (side airbag not activated)
Visually inspect the following items and replace any damaged or cracked part with a new one.
Specially inspect the damage of airbag module body, mounting bracket and harness connector.
- Roof trim
- Each pillar trim
- Curtain airbag module assembly
- Side airbag sensor
- Curtain airbag sensor

3) No side impact
Visually inspect the airbag covers for damage or contamination and replace any faulty part with a new one.

5. AIRBAG CONTROL MODULE

Check for the following, and replace the damaged parts with new parts.
- Control module is cracked or deformed.
- Mounting bracket is cracked or deformed.
- Connector is scratched, cracked or deformed.
- Driver's airbag has been activated.
- Passenger's airbag has been activated.
- Side airbag has been activated.
- Curtain airbag has been activated.
- Seat belt pretensioner has been activated.

6. FRONT SUB SENSOR

If the section of vehicle as shown in the figure is damaged, check the following items and replace the damaged parts with new parts.

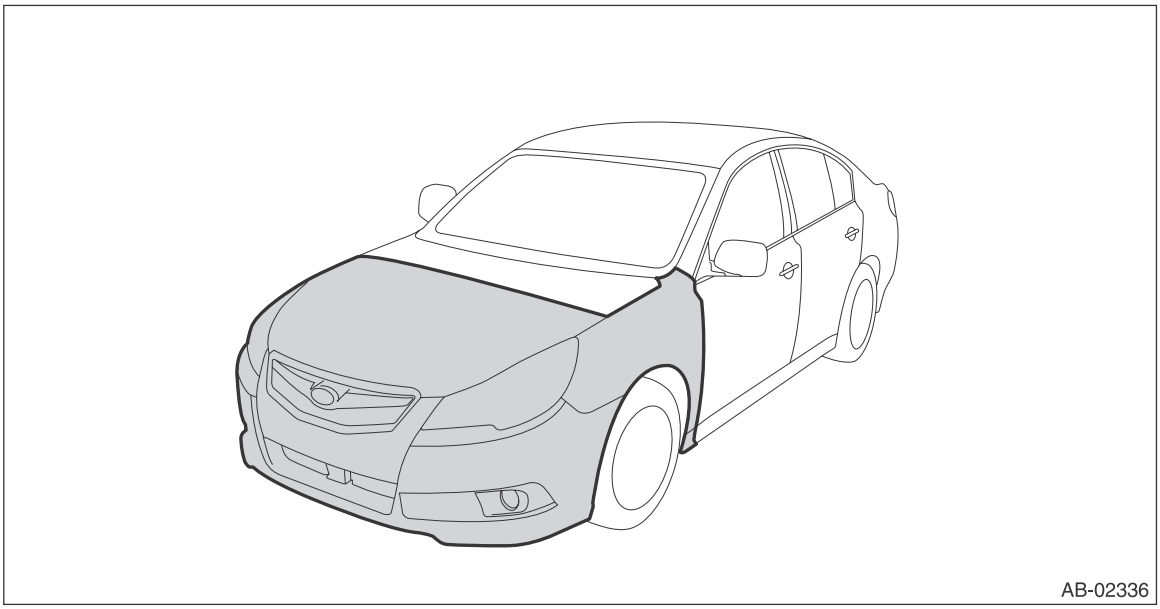

- Front sub sensor is cracked or deformed.
- Connector is scratched, cracked or deformed.
- Airbag has been activated.

7. SIDE AIRBAG SENSOR AND CURTAIN AIRBAG SENSOR

If the section of vehicle as shown in the figure is damaged, check the following items and replace the damaged parts with new parts.

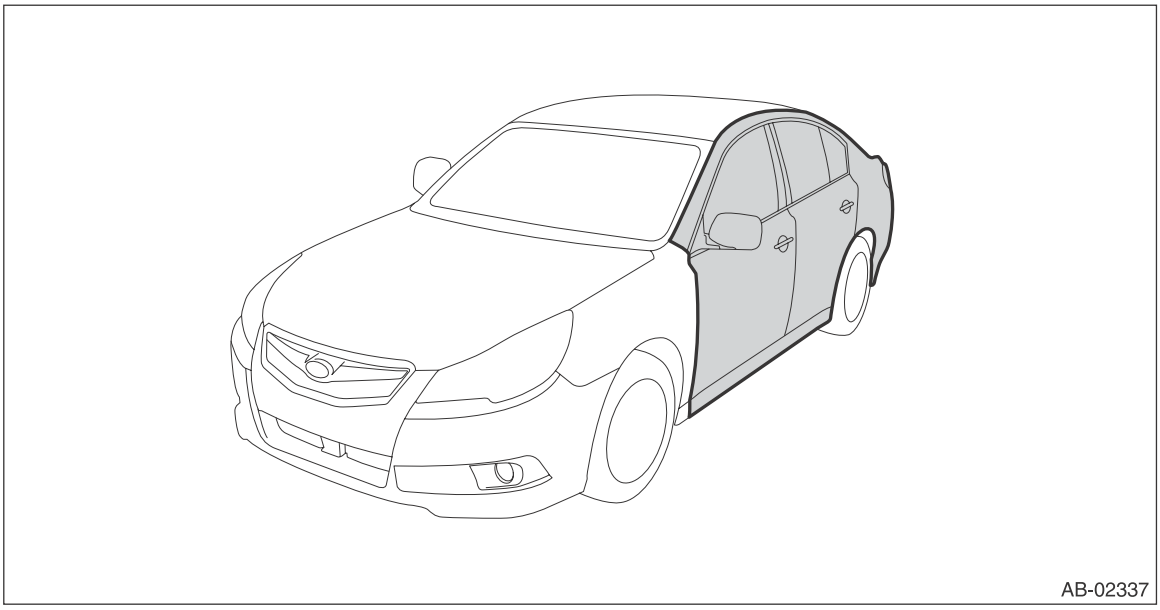

- Side airbag sensor and curtain airbag sensor are cracked or deformed.
- Mounting bracket is cracked or deformed.
- Connector is scratched, cracked or deformed.
- Side airbag or curtain airbag has been activated. (operating side)

8. ROLL CONNECTOR

Check the following items and replace any damaged, cracked, or deformed parts with new parts.

- Combination switch
- Steering roll connector

9. STEERING SHAFT

Measure the overall length of steering column.
If the length is not within the specification, the steering column may be damaged. Replace it with a new part.

Standard: Overall length L

Tilt and telescopic column (measure while minimized)
$816.9^{+1.5}_{-1.5}$ mm ($32.16^{+0.059}_{-0.059}$ in)

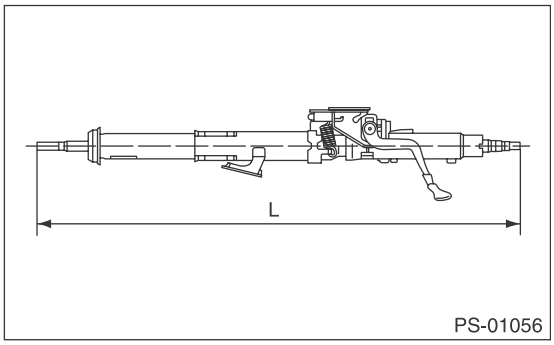

10.PASSENGER'S SEAT

1) Check for the following, and replace the damaged parts with new parts.
- Seat belt buckle body or bracket is scratched, cracked or deformed.
- Backrest frame for crack or deformation
- Headrest for deformation or play
- If the seat cushion cover and seat backrest cover is scratched or coming loose, replace with a new cover and readjust the system. <Ref. to OD(diag)-15, OPERATION, System Calibration (Rezeroing).>

CAUTION:
If any of the following applies, replace the seat cushion pad and frame assembly. Do not disassemble.
- **Cracks or deformation found in the seat cushion frame or seat cushion pad.**
- **Scratches, cracks, or deformation found on the occupant detection system sensor mat or occupant detection control module, or attachment brackets of the control module.**
- **Harness and/or connector is cracked, deformed or open. Harness wire is exposed.**

2) After checking the installing condition of passenger's seat, perform the system adjustment of occupant detection system. <Ref. to OD(diag)-15, OPERATION, System Calibration (Rezeroing).>

11.INSPECTION OF OTHER PARTS

Check for the following parts, and replace the damaged parts with new parts.
1) Steering wheel and steering shaft
Check the steering shaft for mounting conditions and deflection of front and rear, upward and downward directions, and deflection of front and rear direction with tilt lever released. (After a collision, absorbing part of steering shaft may have been operated.)
2) Check the direct type connector of driver's airbag module, curtain airbag module, and pretensioner for damage, and also check each harness for pinching and connector damage. Replace the main harness as an assembly if damage is found.
3) Check the seat cushion, backrest, seat rail and headrest for installing condition and play.
4) If any break or fray is found in the backrest cover of the driver's seat or passenger's seat, replace the backrest cover with a new part because the side airbag system may not operate normally if no care is made.
5) For the passenger's seat, replace the seat cushion pad frame assembly with a new part if the seat cushion frame assembly is deformed or cracked.
6) If there are tears or loosening in the passenger side seat cushion cover, it may interfere with the proper operation of the occupant detection system. Replace with a new cushion cover.
7) Be sure to perform the system calibration for the occupant detection system after removing or replacing the passenger seat cushion cover. If system adjustment is not performed, the occupant detection system may not function properly. <Ref. to OD(diag)-15, OPERATION, System Calibration (Rezeroing).>
8) Use the Subaru Select Monitor to check the front right seat belt buckle switch is operating normally.

4. Driver's Airbag Module

A: REMOVAL

CAUTION:
Refer to "CAUTION" of "General Description" before handling the airbag module. <Ref. to AB-9, CAUTION, General Description.>

1) Position the front wheels straight ahead. (After moving a vehicle 5 m (16 ft) or more with front wheels positioned straight ahead, make sure that the vehicle moves straight ahead).
2) Turn the ignition switch to OFF.
3) Disconnect the ground cable from battery and wait for at least 60 seconds before starting work.
4) Remove the driver's airbag module assembly.

Preparation tool: TORX® T30

(1) Loosen the two TORX® bolts on the sides of the steering wheel.

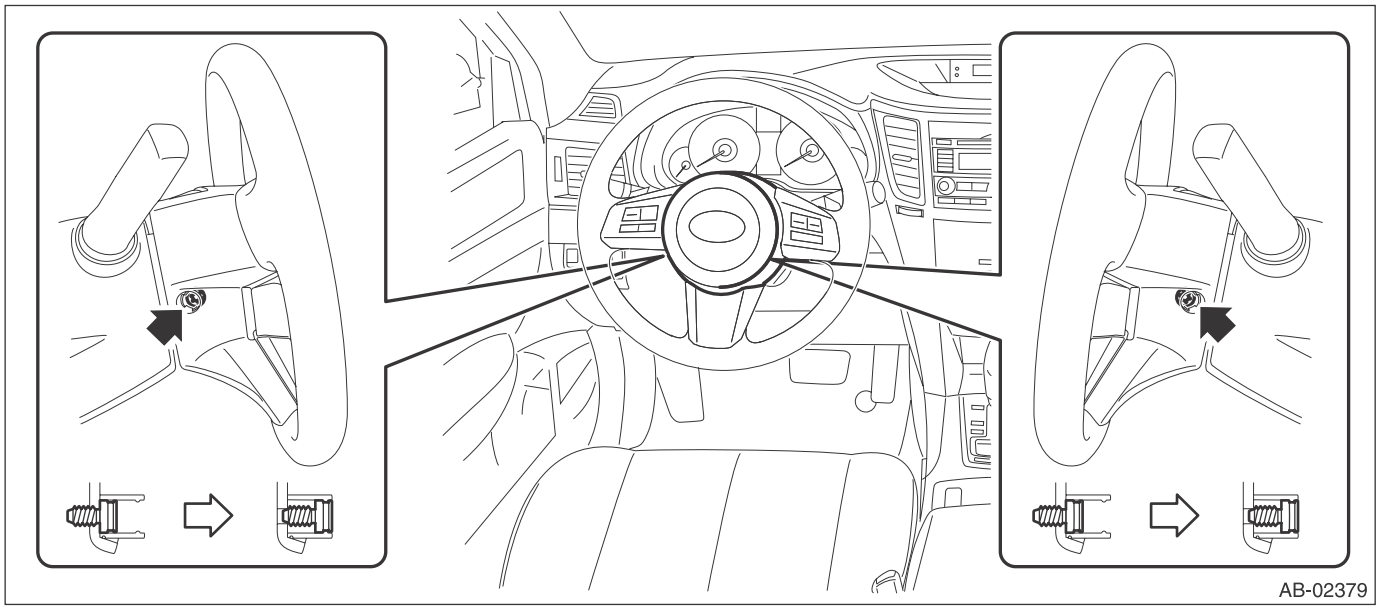

(2) Disconnect the airbag connector and remove the airbag module assembly. <Ref. to AB-22, DRIVER'S AIRBAG MODULE, CURTAIN AIRBAG MODULE & PRETENSIONER, PROCEDURE, Airbag Connector.>
(3) Disconnect the horn harness.

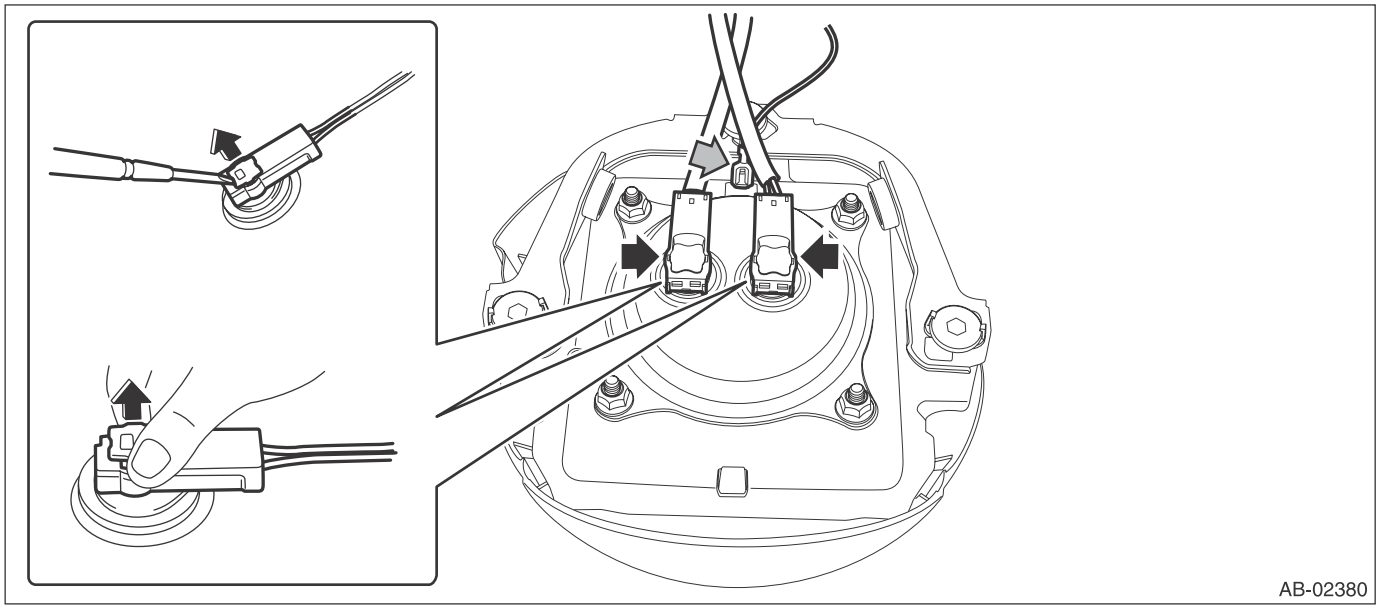

B: INSTALLATION

CAUTION:
• Refer to "CAUTION" of "General Description" before handling the airbag module. <Ref. to AB-9, CAUTION, General Description.>
• Do not allow harness and connectors to interfere or get tangled up with other parts.
1) Before installation, inspect the following items and replace any faulty part with a new one.
- Airbag module is cracked or deformed.
- Harness and/or connector are cracked, deformed or open.
- Harness wire is exposed.
- The steering wheel is in the way, making it difficult to install the airbag module.
- The clearance between the driver's airbag module and steering wheel is not constant.
- When steering wheel deformation in axial and vertical directions exceed limits.

Standard:
Axial deflection A (deflection of steering wheel)
Less than 6 mm (0.24 in)
Vertical deflection L (runout of steering wheel)
Less than 17 mm (0.68 in)

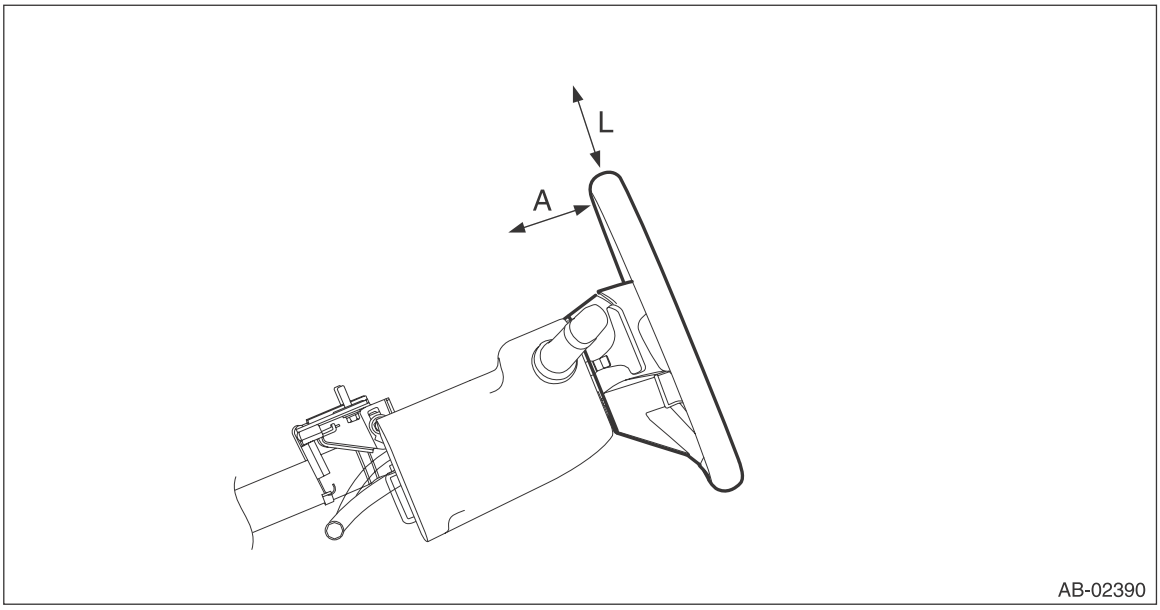

2) Install each part in the reverse order of removal.

Tightening torque:
10 N·m (1.0 kgf-m, 7.4 ft-lb)

5. Passenger's Airbag Module

A: REMOVAL

CAUTION:
Refer to "CAUTION" of "General Description" before handling the airbag module. <Ref. to AB-9, CAUTION, General Description.>

1) Turn the ignition switch to OFF.
2) Disconnect the ground cable from battery and wait for at least 60 seconds before starting work.
3) Remove the console front cover assembly.

- MT model
  1. Remove the shift knob.
  2. Release the clips and claws, then pull up the console front cover assembly.

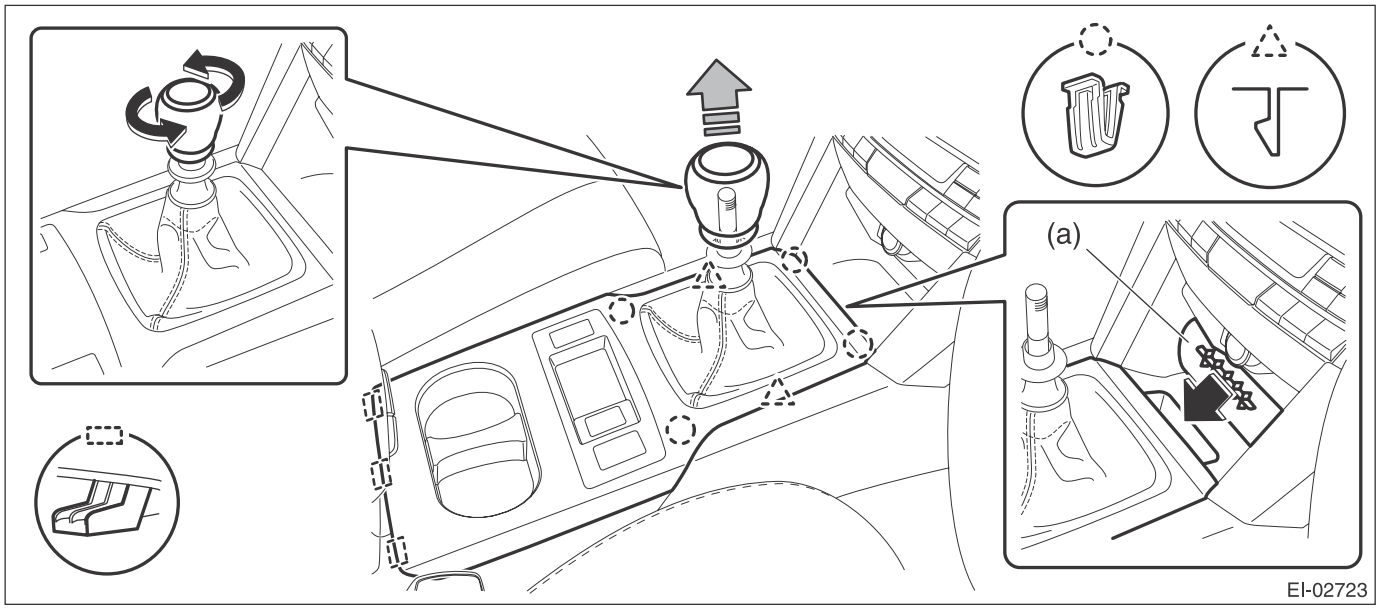

NOTE:
Turn over the front center pocket mat (a) and pull up the console front cover from the slit.

  3. Disconnect the harness connector and remove the console front cover assembly.

- AT model
  1. Remove the select lever knob.
     a. Lower the cover grip AT.
     b. Remove the clamp grip pin, then remove the select lever knob.

2. Release the clips and claws, then pull up the console front cover assembly.

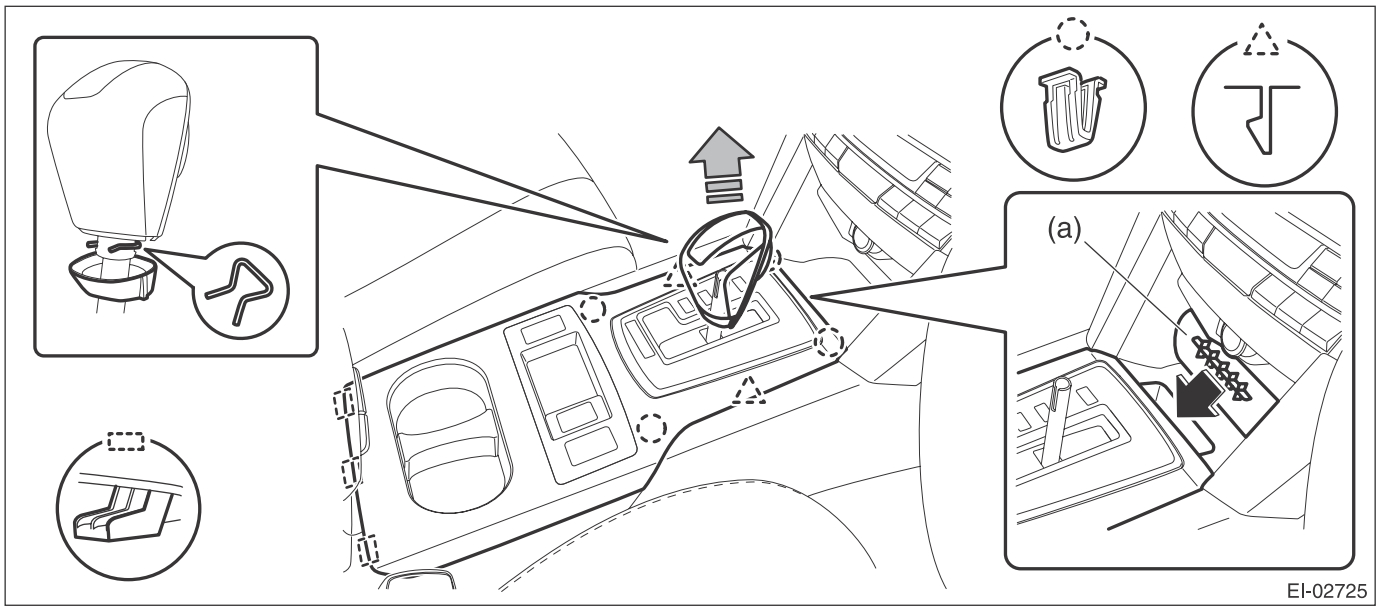

NOTE:
Turn over the front center pocket mat (a) and pull up the console front cover from the slit.

3. Disconnect the harness connector and remove the console front cover assembly.

4) Remove the left and right console front side cover assembly.
(1) Remove the screws and release the clips (A) to (D) in order.
(2) Remove the console front side cover assembly by pulling it up.

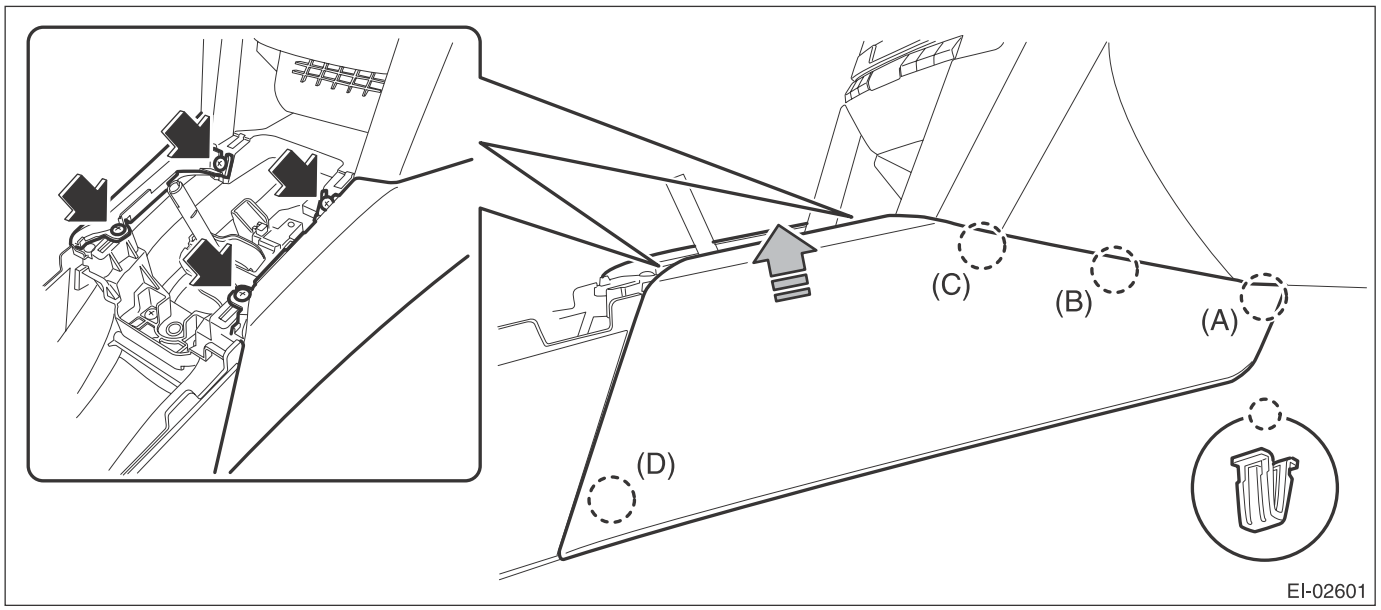

5) Remove the console box assembly.
(1) Move the seat forward, and remove the bolts after detaching the left and right caps.

NOTE:
For a model with power seat, connect the battery ground cable and move the seat. Then, disconnect the battery ground cable again and wait for 60 seconds at least before restarting the work.

(2) Remove the screws, disconnect the harness connector and remove the console box assembly.

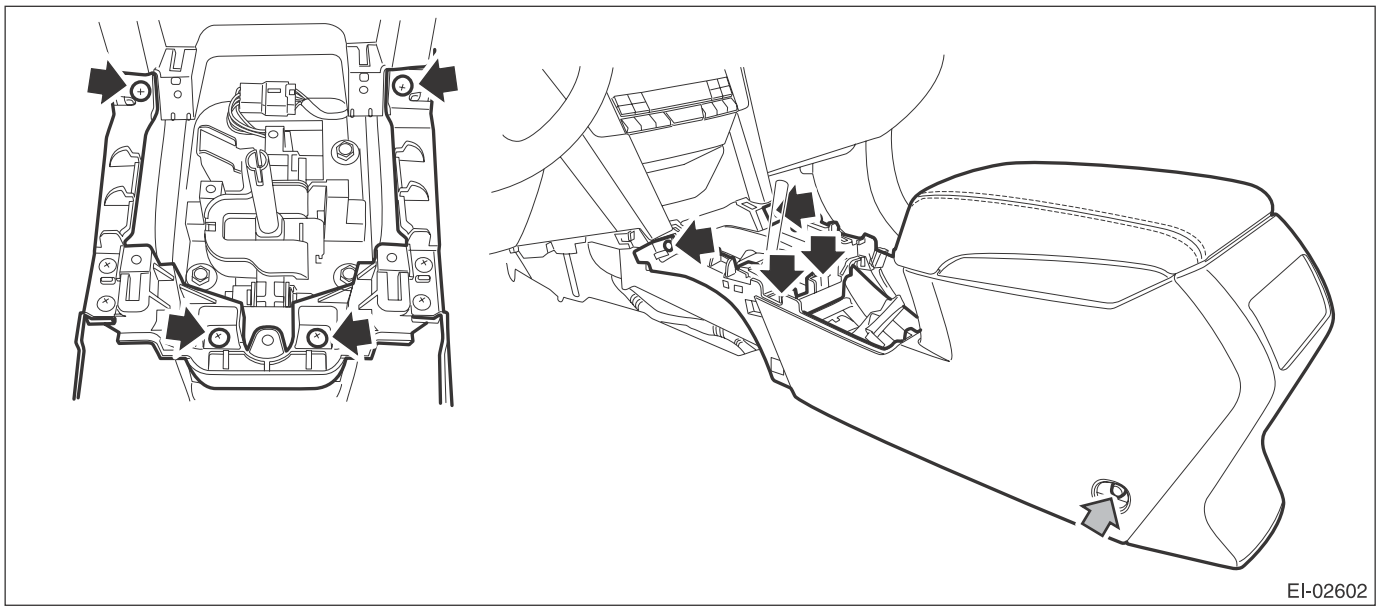

6) Remove the clips, and remove the instrument panel side cover LH.

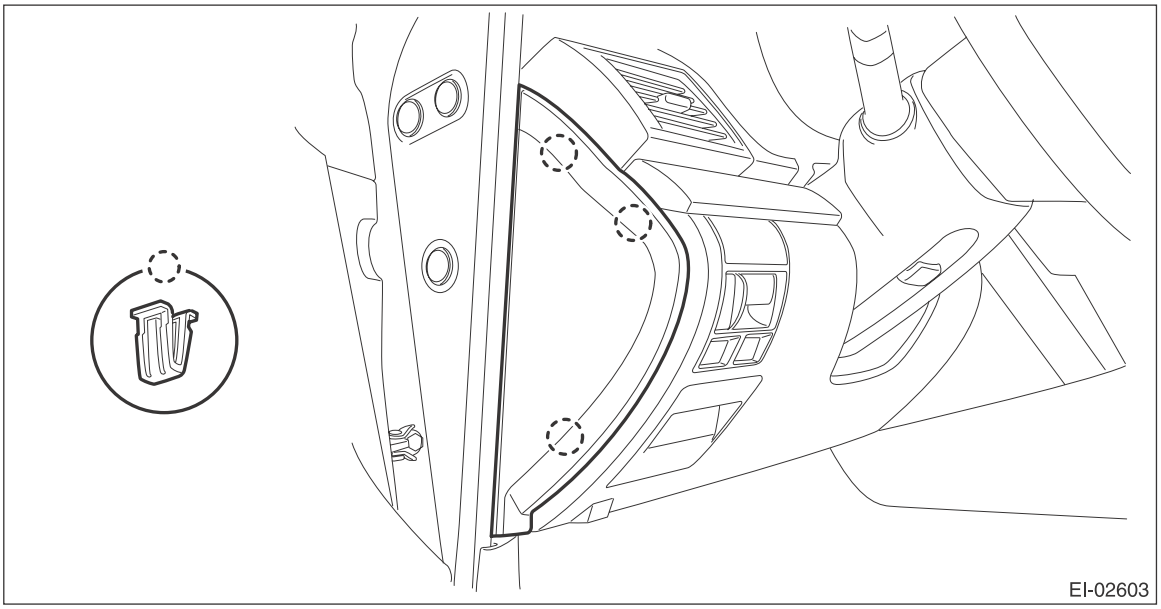

7) Remove the instrument panel lower cover.

(1) Remove the clips and data link connector, and remove the instrument panel lower cover under.

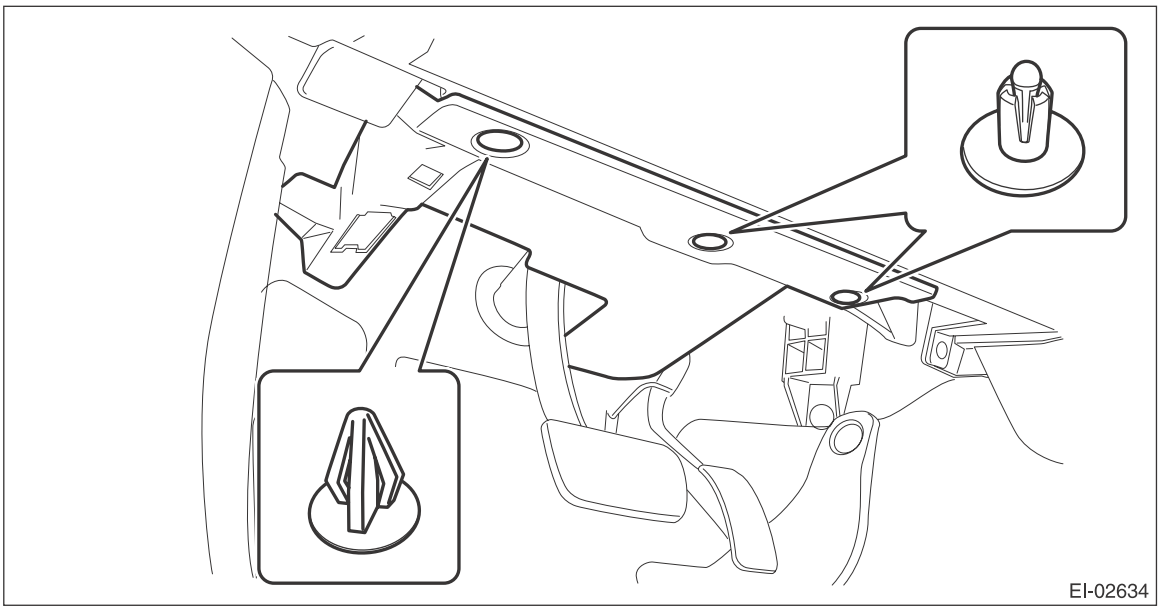

(2) Remove the screws and clips and release the claws, and remove the instrument panel lower cover while disconnecting the harness connectors.

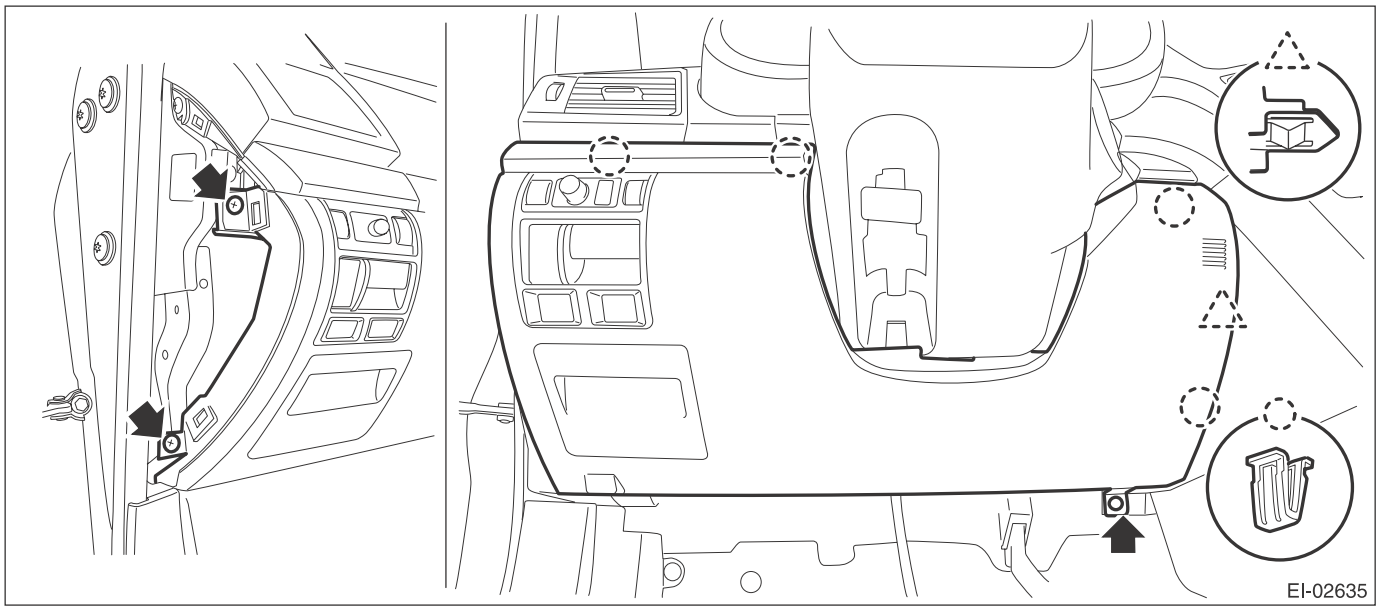

8) Remove the center panel assembly.

CAUTION:
Do not put your finger on the fin of the air vent grille. Doing so may damage the fin.

(1) Attach the protective tape (a) to the meter visor.

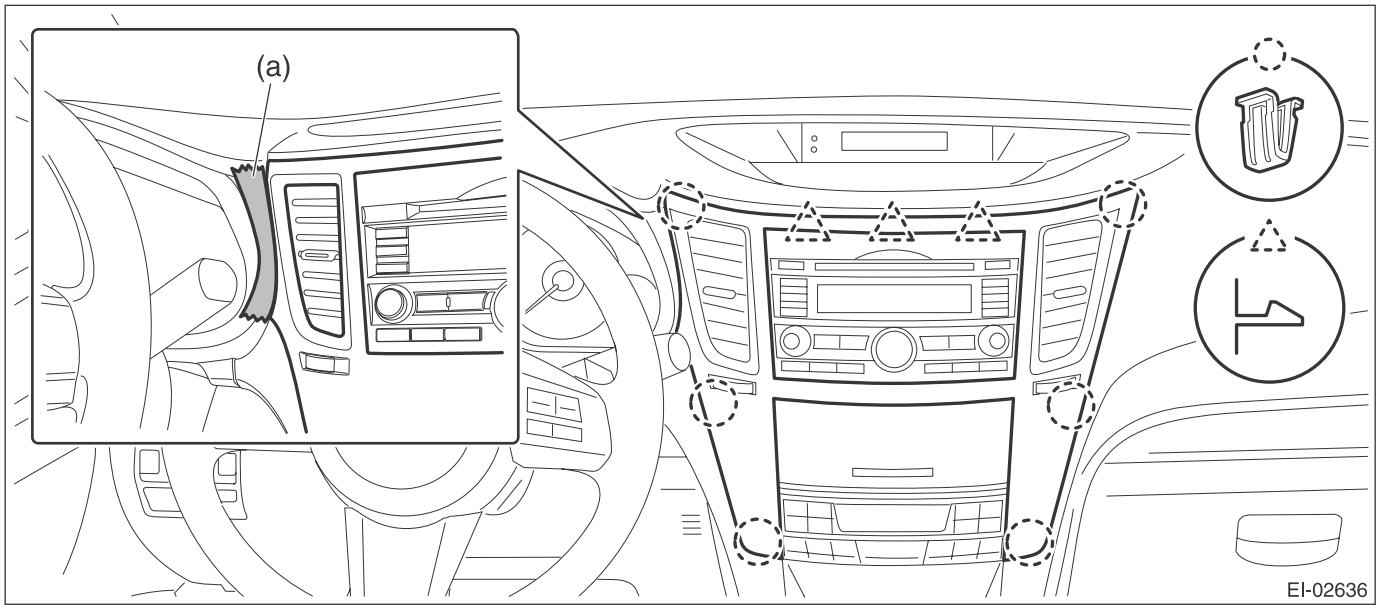

(2) Insert a finger into the air vent grille and release the left and right clips at the top of the center panel. (A), (B)
(3) Insert a finger into the air vent grille and release the left and right clips at the center of the center panel. (C), (D)
(4) Release the clips at the bottom of the center panel and remove the center panel assembly.

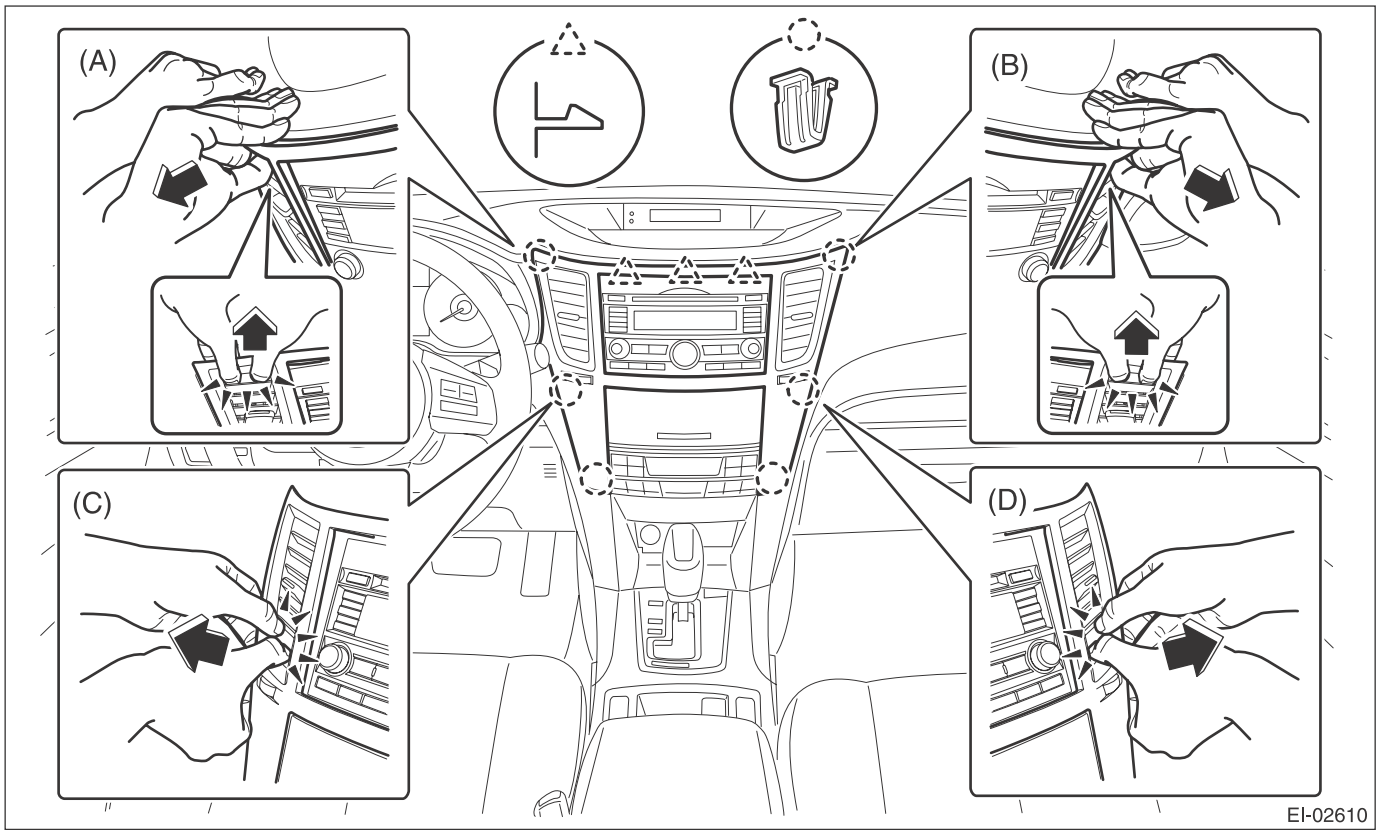

9) Remove the combination meter assembly.

CAUTION:
- **Be careful not to damage the meter or instrument panel.**
- **Pay particular attention to avoid damaging the meter glass.**

(1) Remove the screws and release the claws, then detach the starter cover assembly.

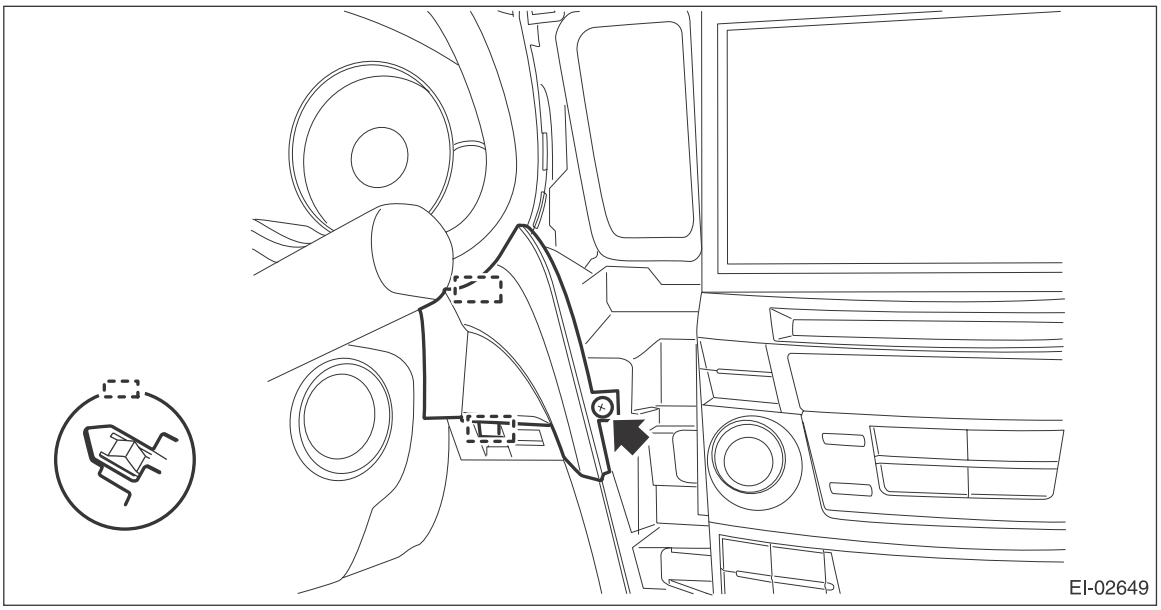

(2) Release the lock, tilt the steering column to the lowest end and fully extend the column by the telescopic system.

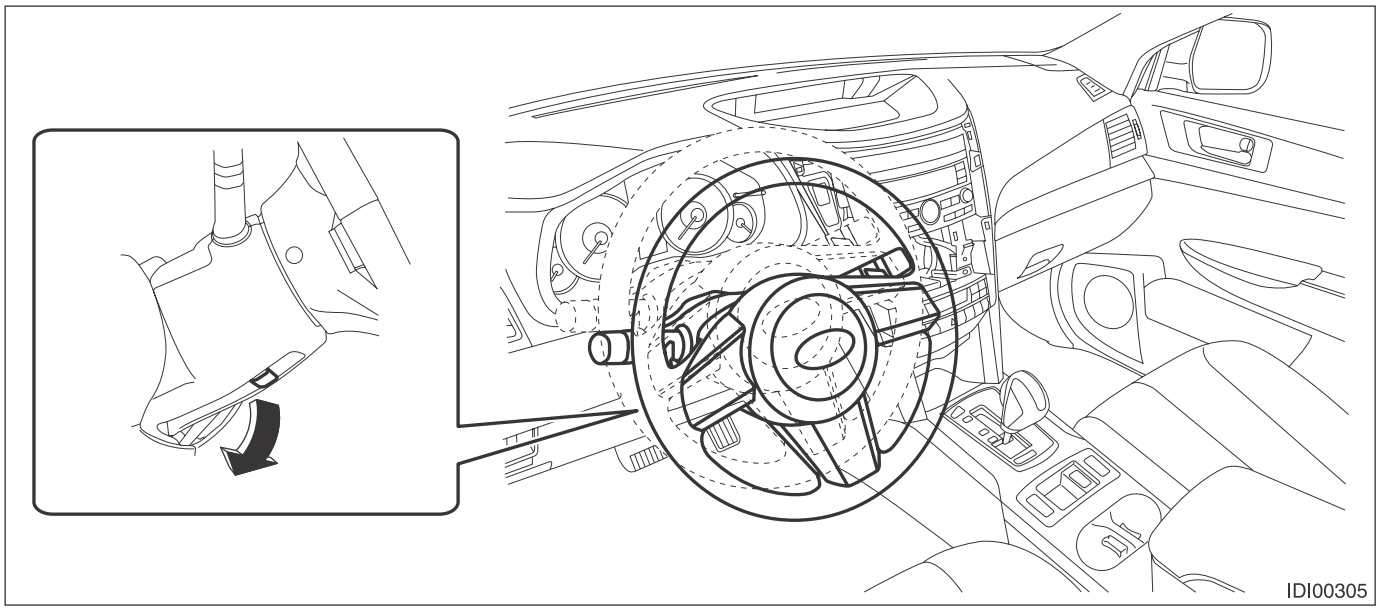

(3) Release the screws and clips, then detach the meter visor assembly.

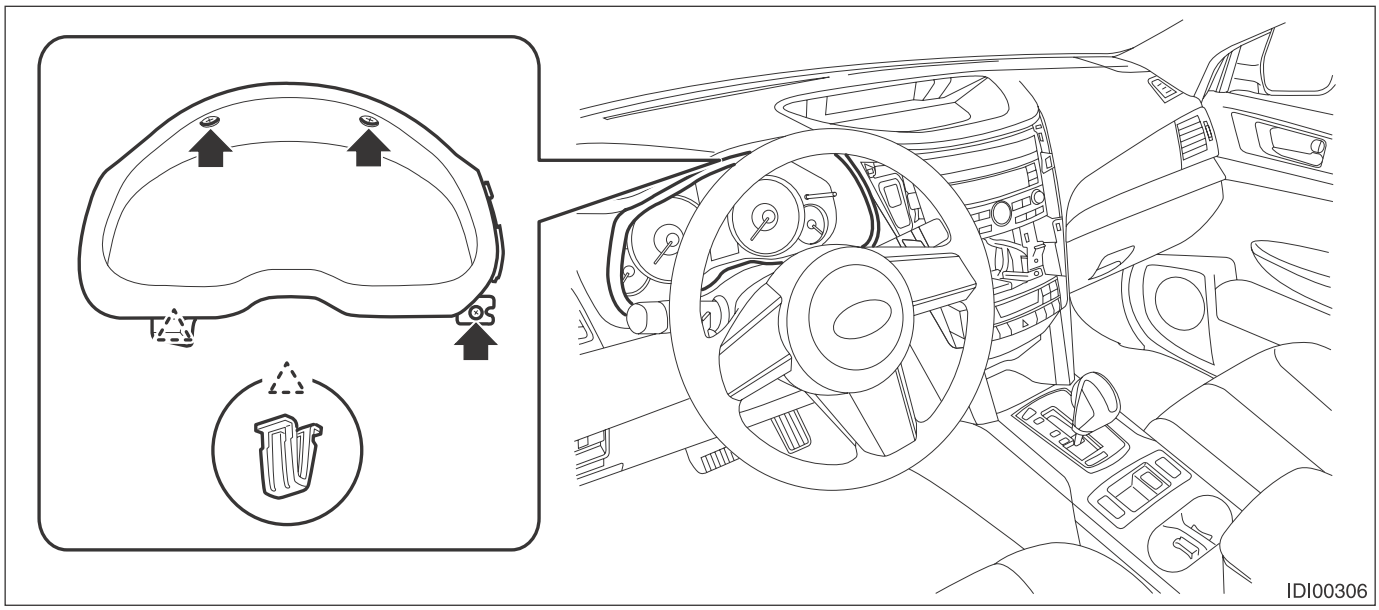

(4) Remove the screws and pull the steering COMPL upper cover toward you.

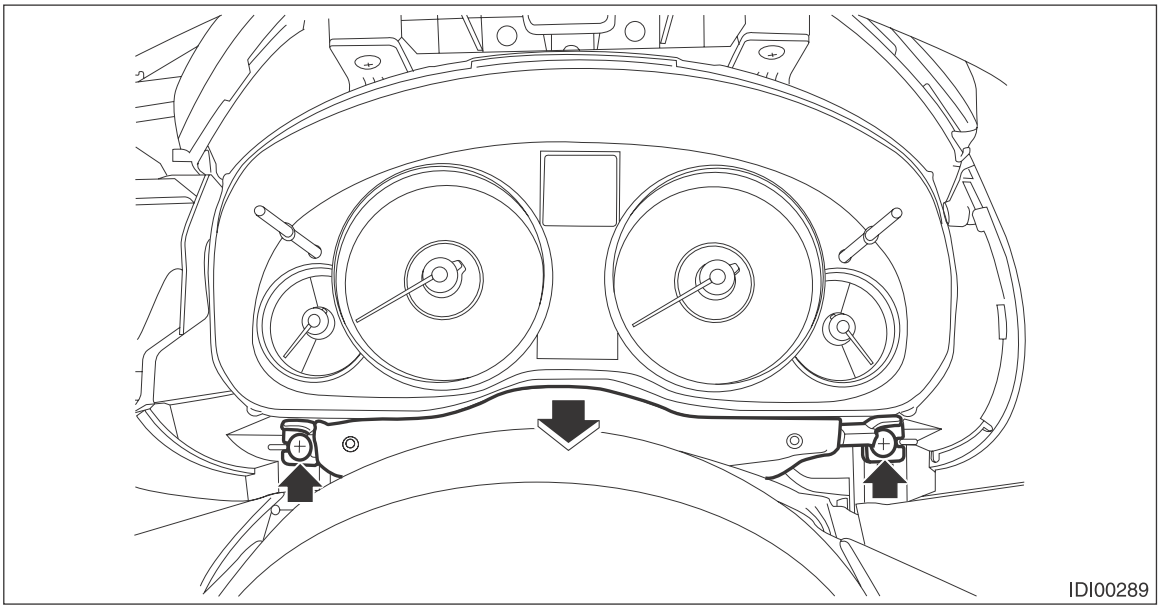

(5) Remove the screws and pull out the combination meter toward you to disconnect the connectors.

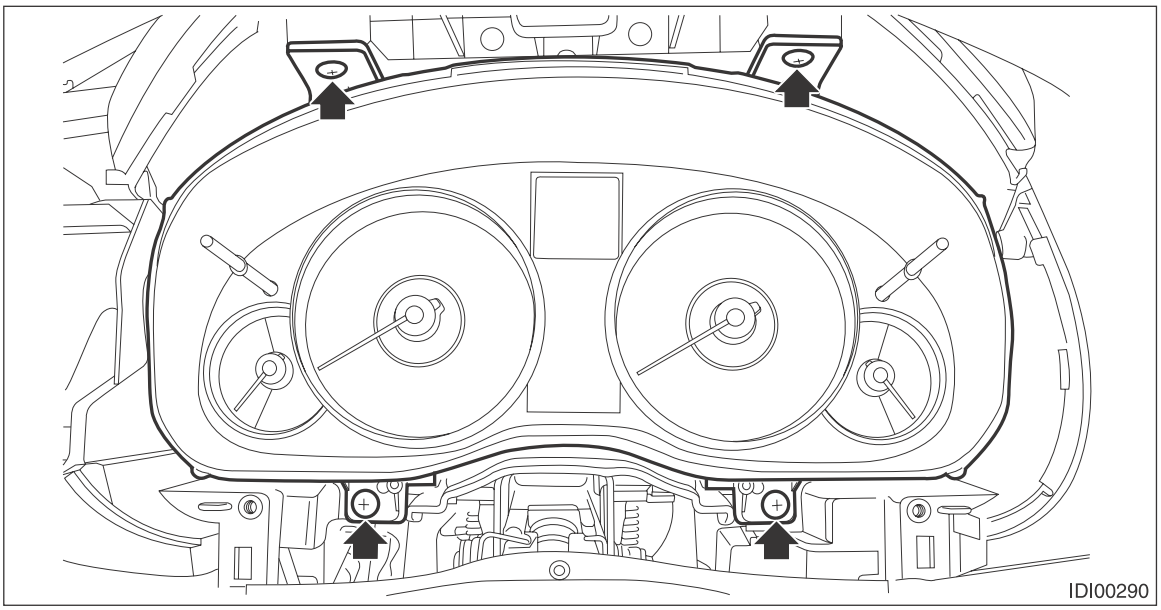

(6) Remove the combination meter assembly as shown in the figure.

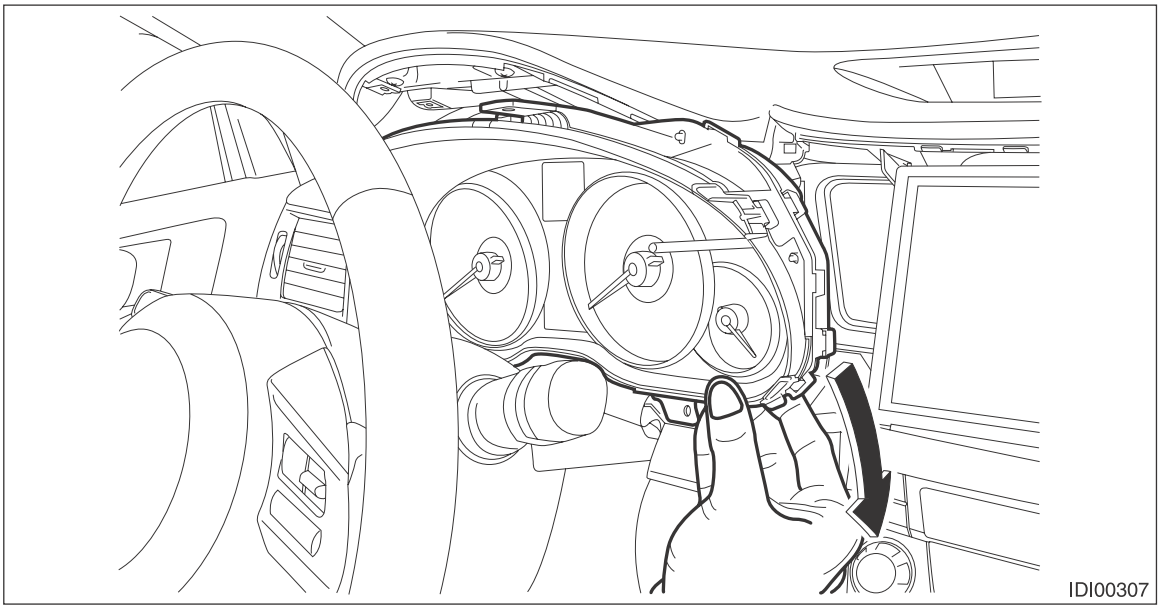

10) Remove the audio assembly.
(1) Remove the left and right screws, and partially pull the audio out from center console.

(2) Disconnect the connectors, and remove the audio assembly.

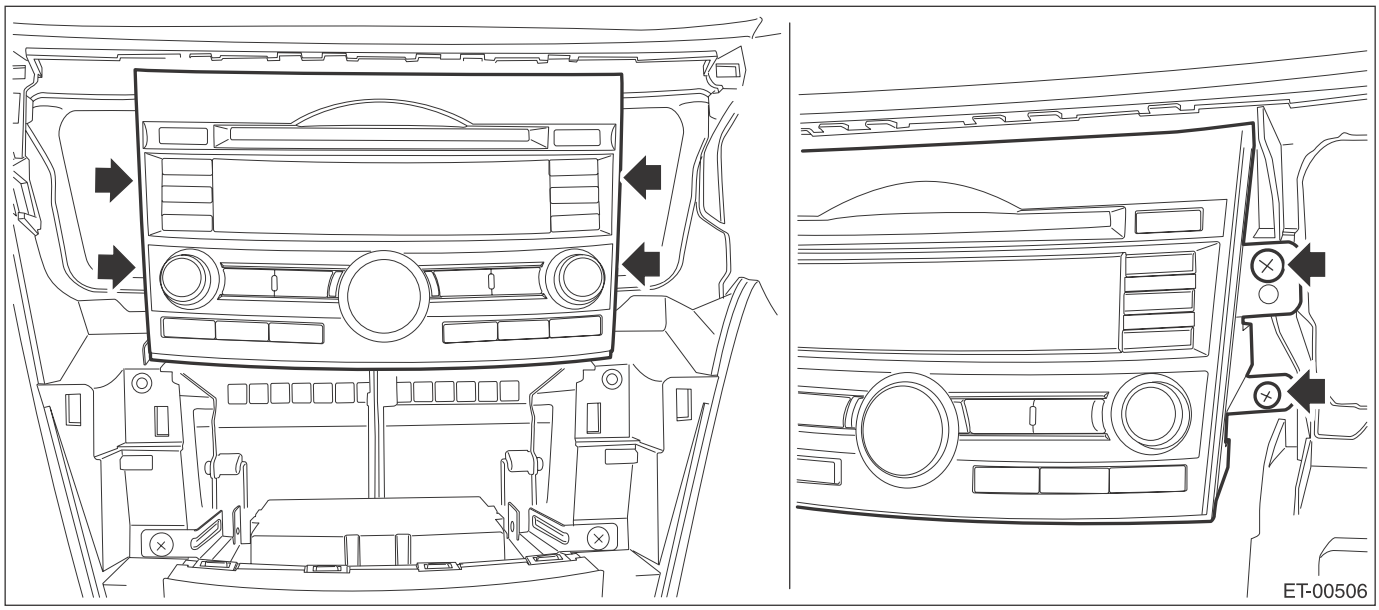

11) Remove the navigation assembly. (model with navigation)
(1) Remove the left and right screws.
(2) Disconnect the connectors, and remove the navigation assembly.

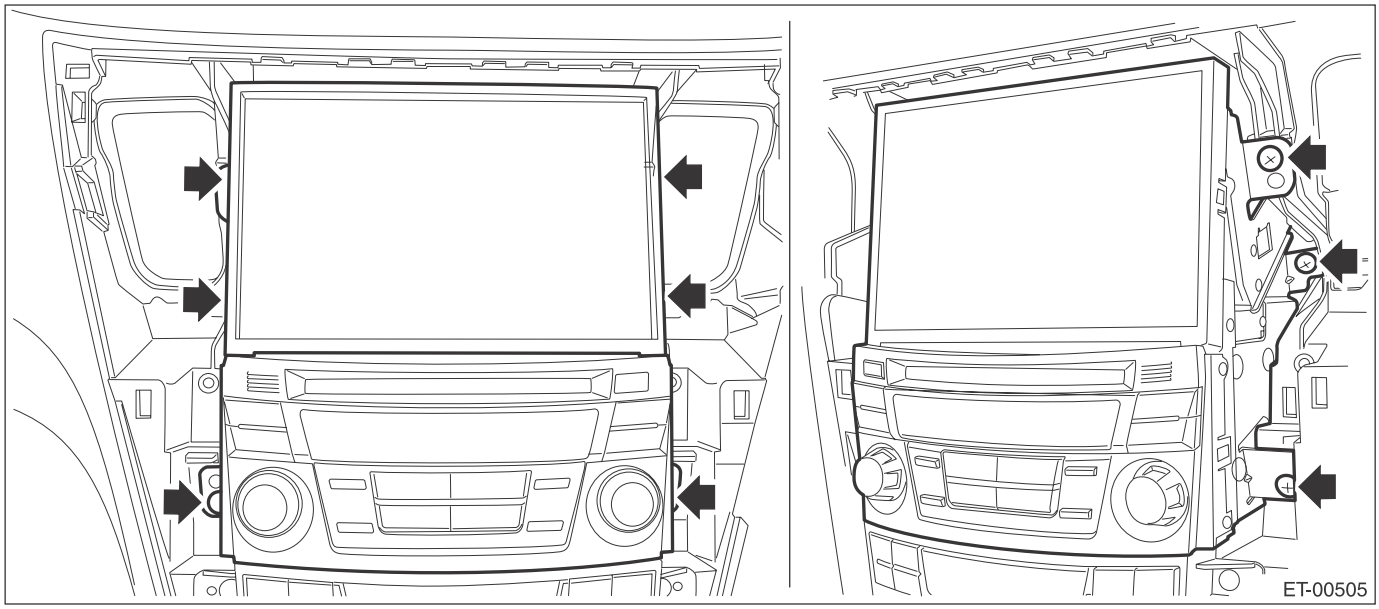

12) Remove the control panel assembly.
(1) Remove the screws, and pull out the control panel assembly toward you.

(2) Disconnect the connector, and remove the control panel assembly.

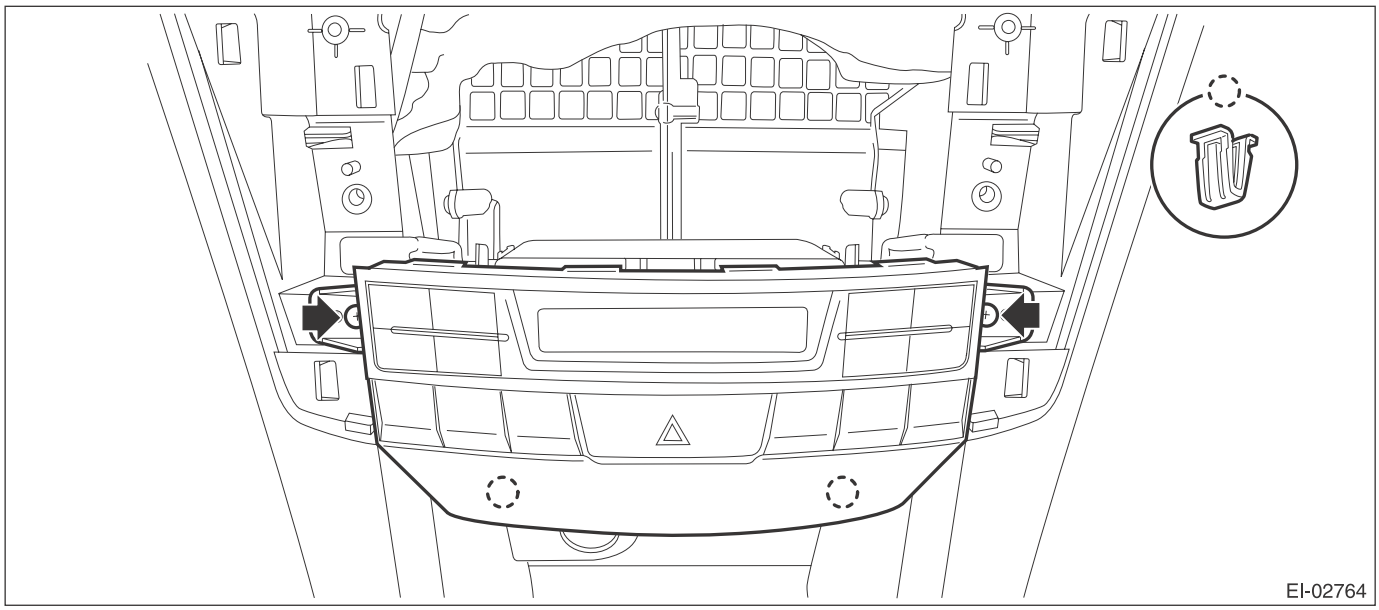

13) Remove the multi display assembly.

CAUTION:
Be careful not to damage the multi display or instrument panel.

(1) Detach the center speaker cover by releasing the claws and hooks.

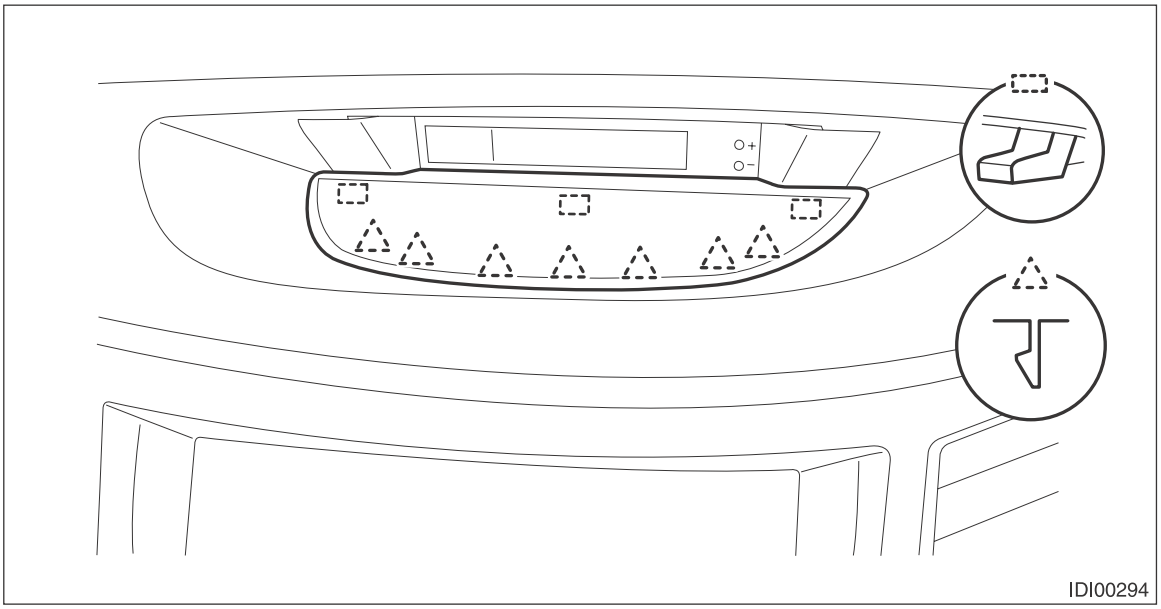

NOTE:
An easy way of removal is to first remove the audio assembly or navigation assembly and push up the cover from the backside.

(2) Release the clips and claws, detach the multi display panel LWR.

(3) Remove the screws and pull out the multi display toward you to disconnect the connectors.

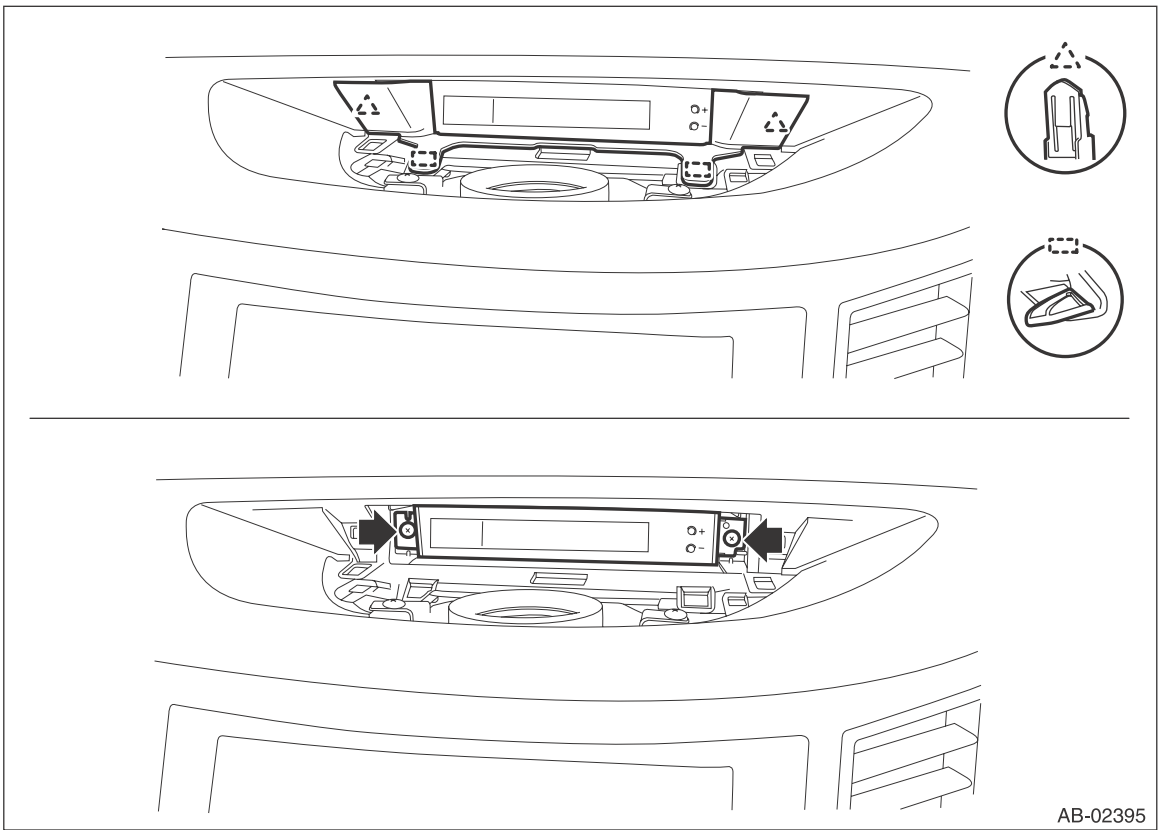

14) Remove the left and right front side speaker assembly. (Models with front side speaker)
(1) Release the clips and claws, then detach the side speaker cover.

CAUTION:
To remove the cover, use a plastic clip remover or equivalent tool.

(2) Remove the screws.

Preparation tool: Stubby screwdriver

(3) Disconnect the connector and remove the front side speaker assembly.

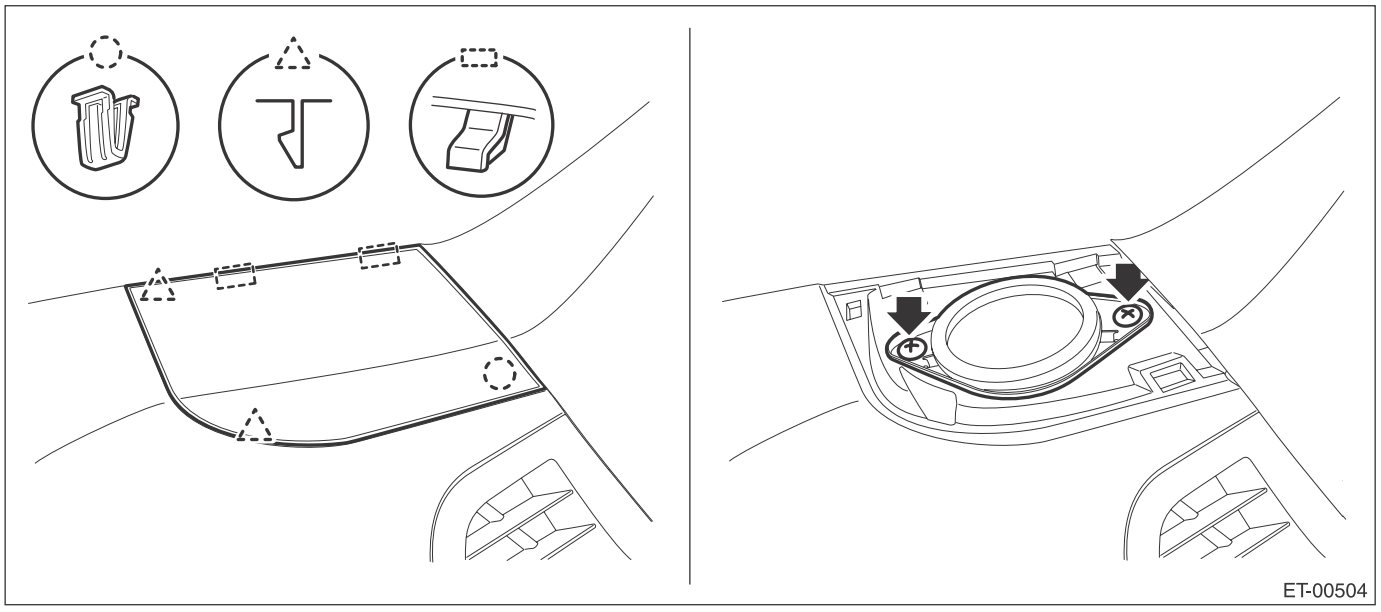

NOTE:
On the passenger's side, also disconnect the sunload sensor connector.

15) Remove the left and right front pillar trims.
(1) Pull the upper part of the front pillar trim towards the center of the vehicle.
(2) Insert long-nose pliers into the top part of the trim, grip the clip with the pliers and twist 90° in that position.

CAUTION:
Be careful not to damage the pillar trim surface and curtain airbag module when inserting the pliers.
(3) Holding the clip twisted as in the previous step, remove the front pillar trim from the clip.
(4) Remove the clip and the front pillar trim.

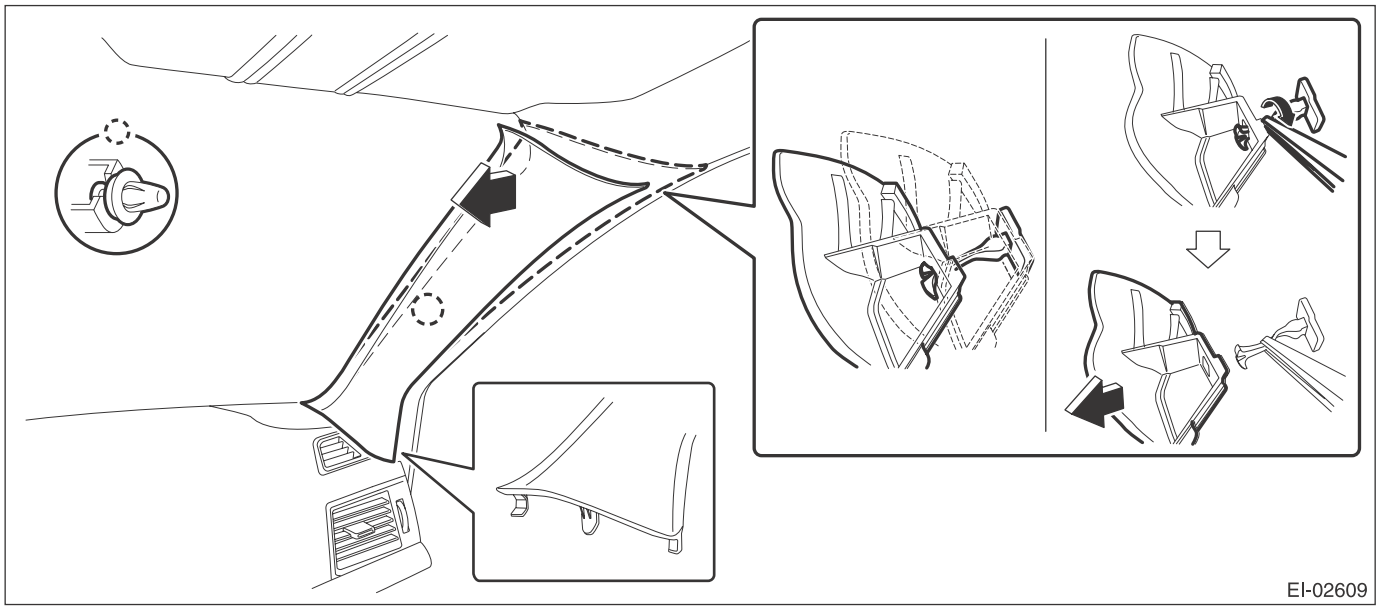

16) Remove the glove box lid assembly.
(1) Remove the glove box damper.
(2) Release the stoppers and remove the glove box lid assembly by pulling it toward you.

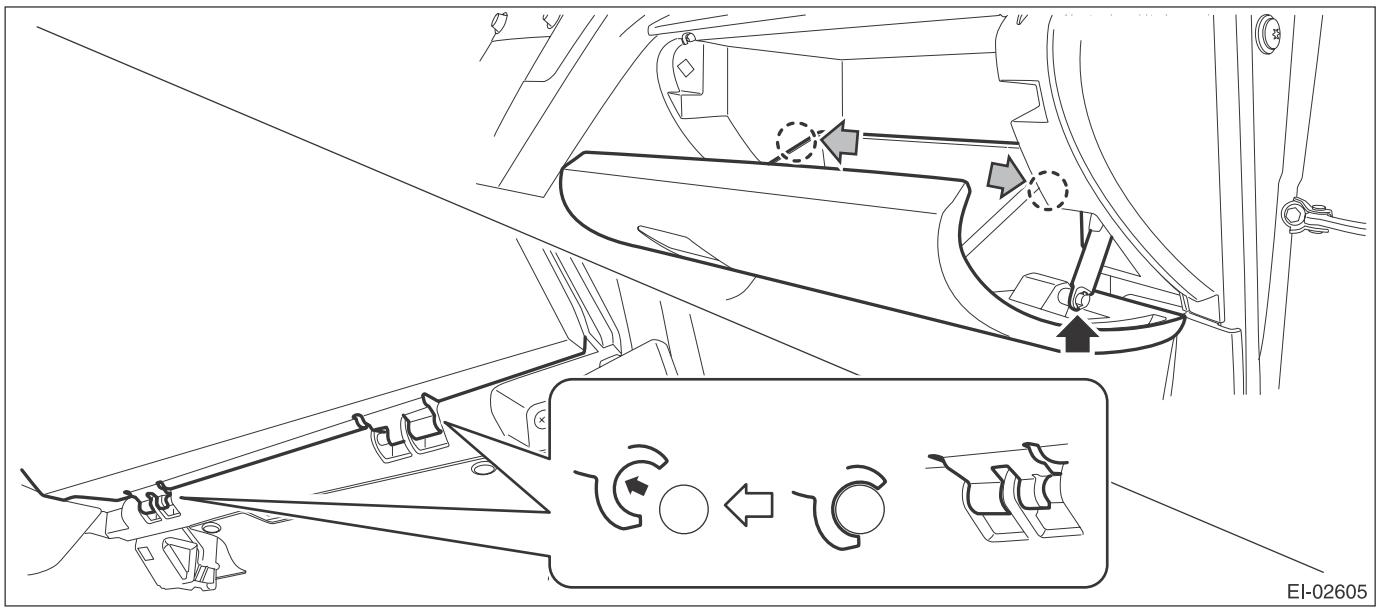

17) Release the clips, and remove the instrument panel side cover RH.

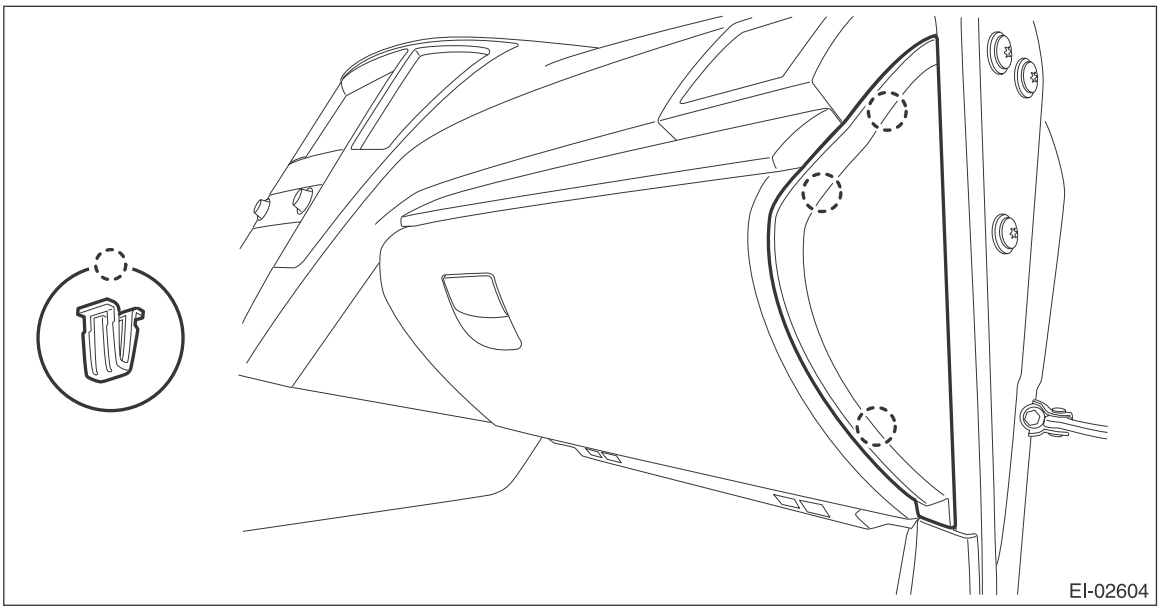

18) Remove the glove box back panel.
(1) Release the clips, and remove the glove box under cover.

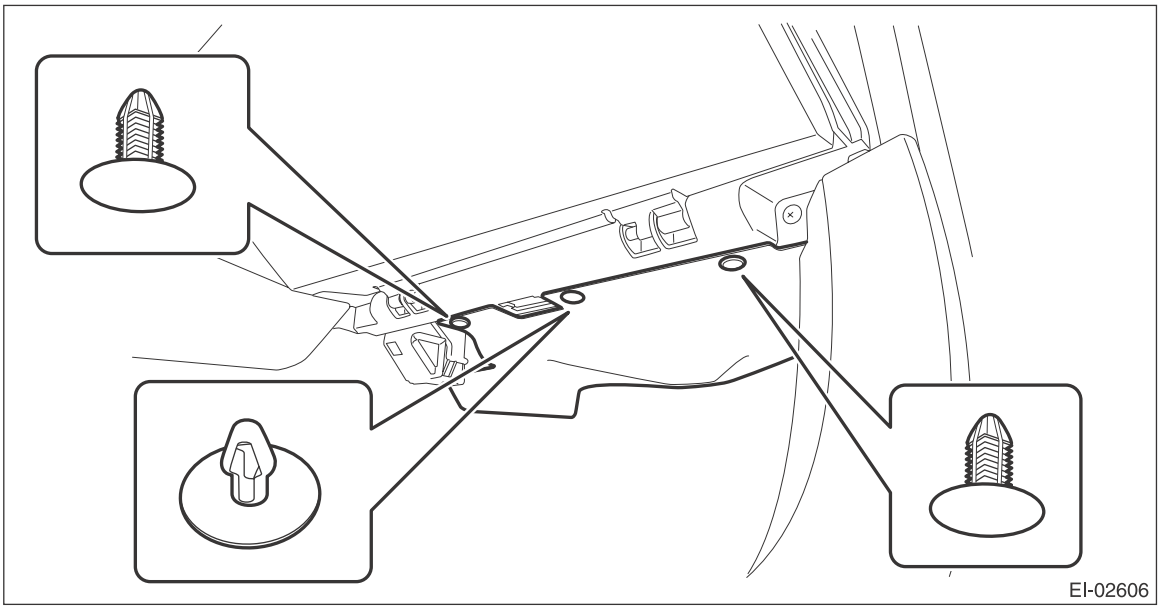

(2) Release the clips and claws, and remove the ornament panel assembly P.

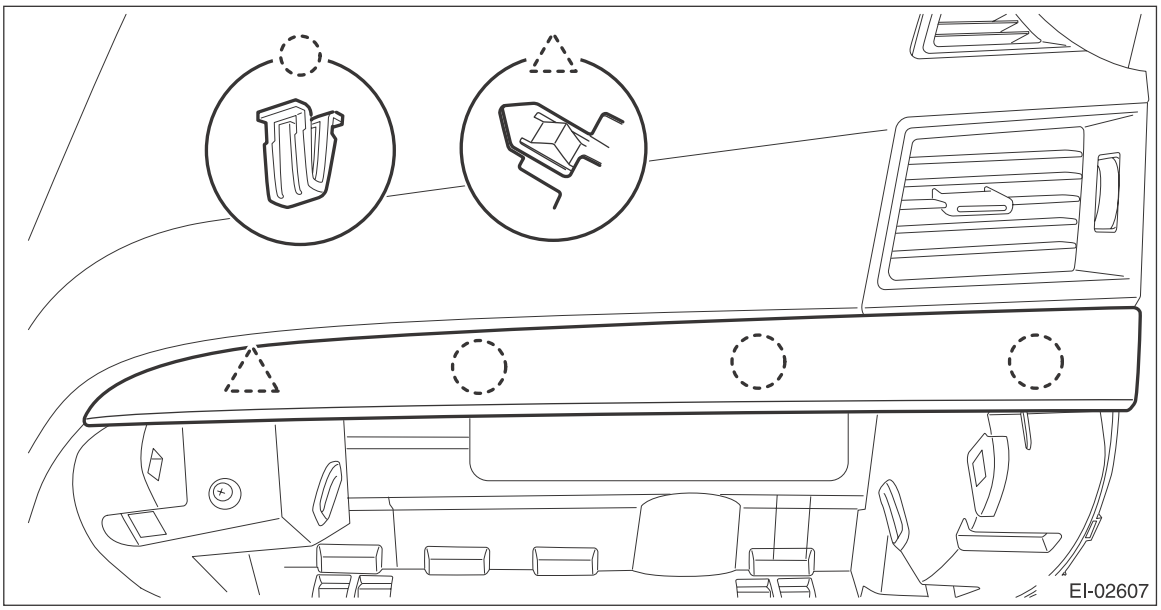

(3) Remove the screws and release the claws, then detach the glove box back panel.

CAUTION:
Pay attention to the glove box light LED harness.

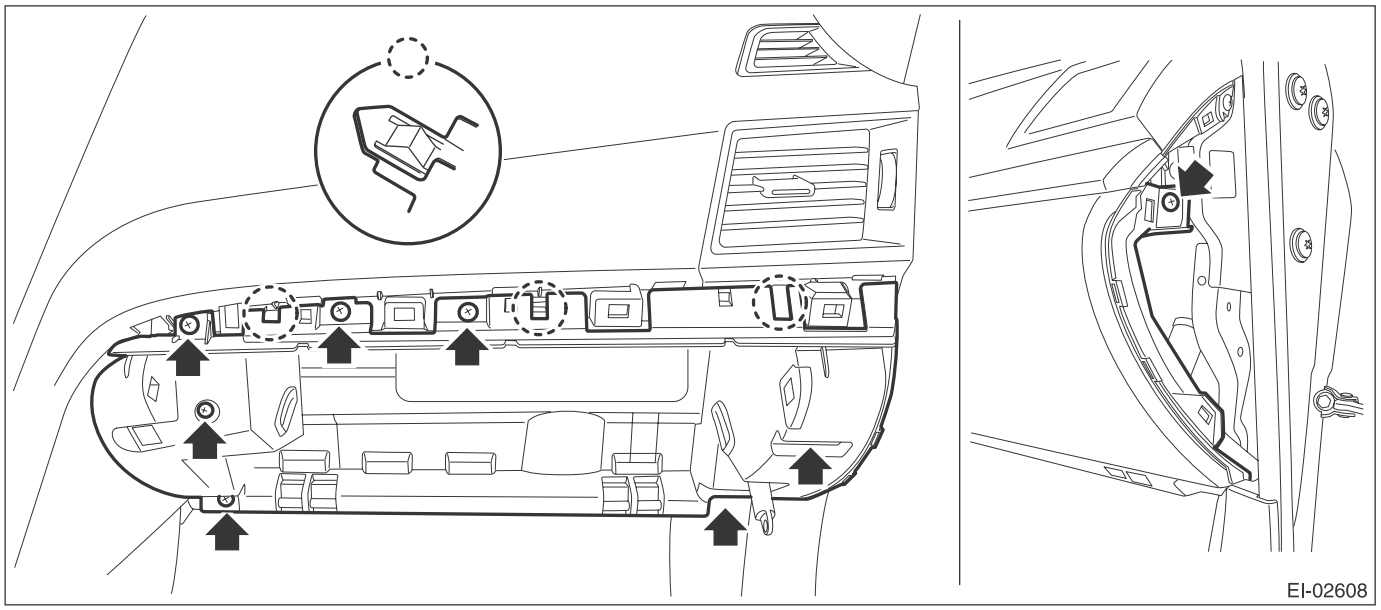

(4) Disconnect the glove box light LED connector.

19) Disconnect the connector from the passenger's airbag module assembly and remove the bolt.

(1) Release the connector and harness clamps and disconnect the airbag connector.

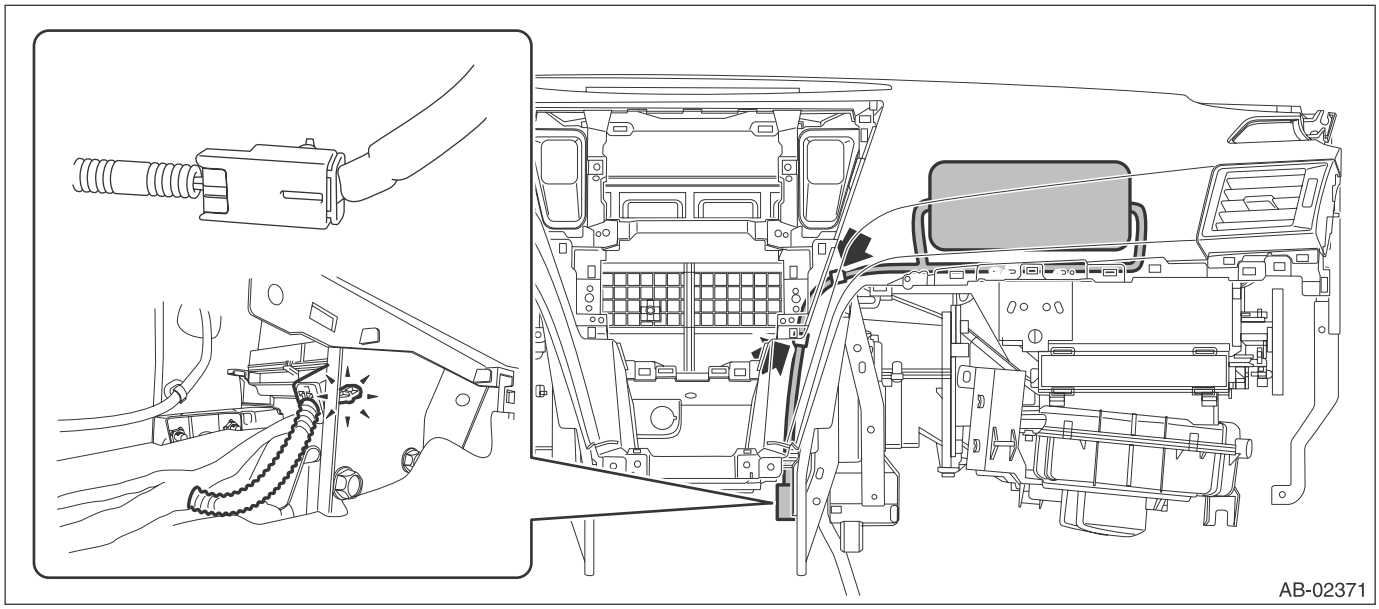

(2) Remove passenger's airbag module assembly bolts.

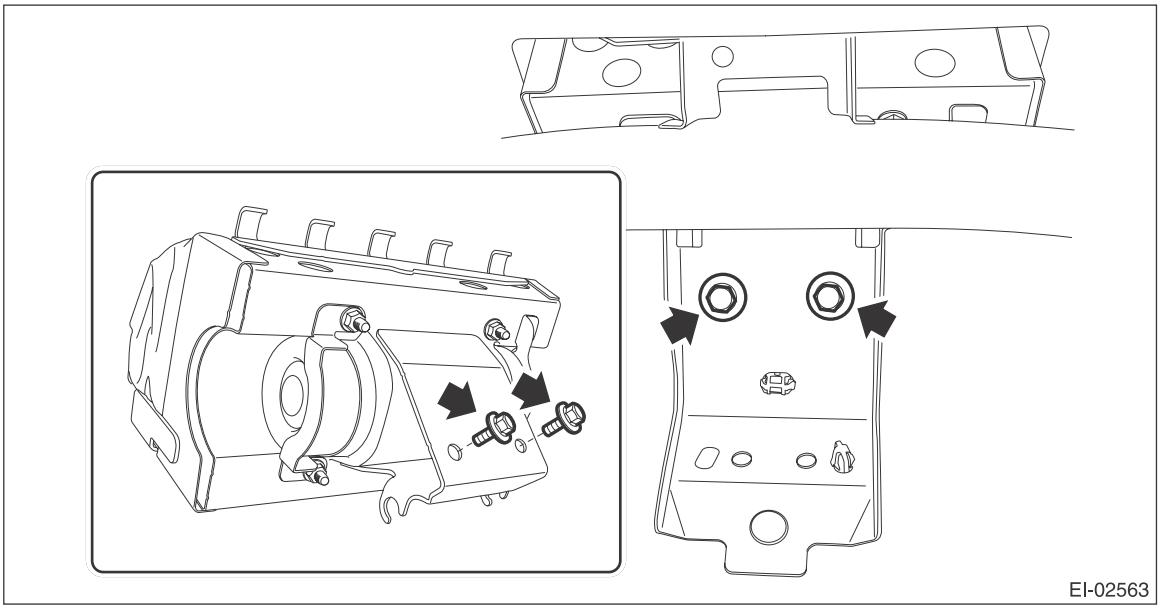

20) Remove the steering shaft assembly. <Ref. to PS-20, REMOVAL, Steering Column.>
21) Remove the instrument panel assembly.

(1) Remove the screws. (A), (B), (C), (D), (E), (F), (G), (H), (I)

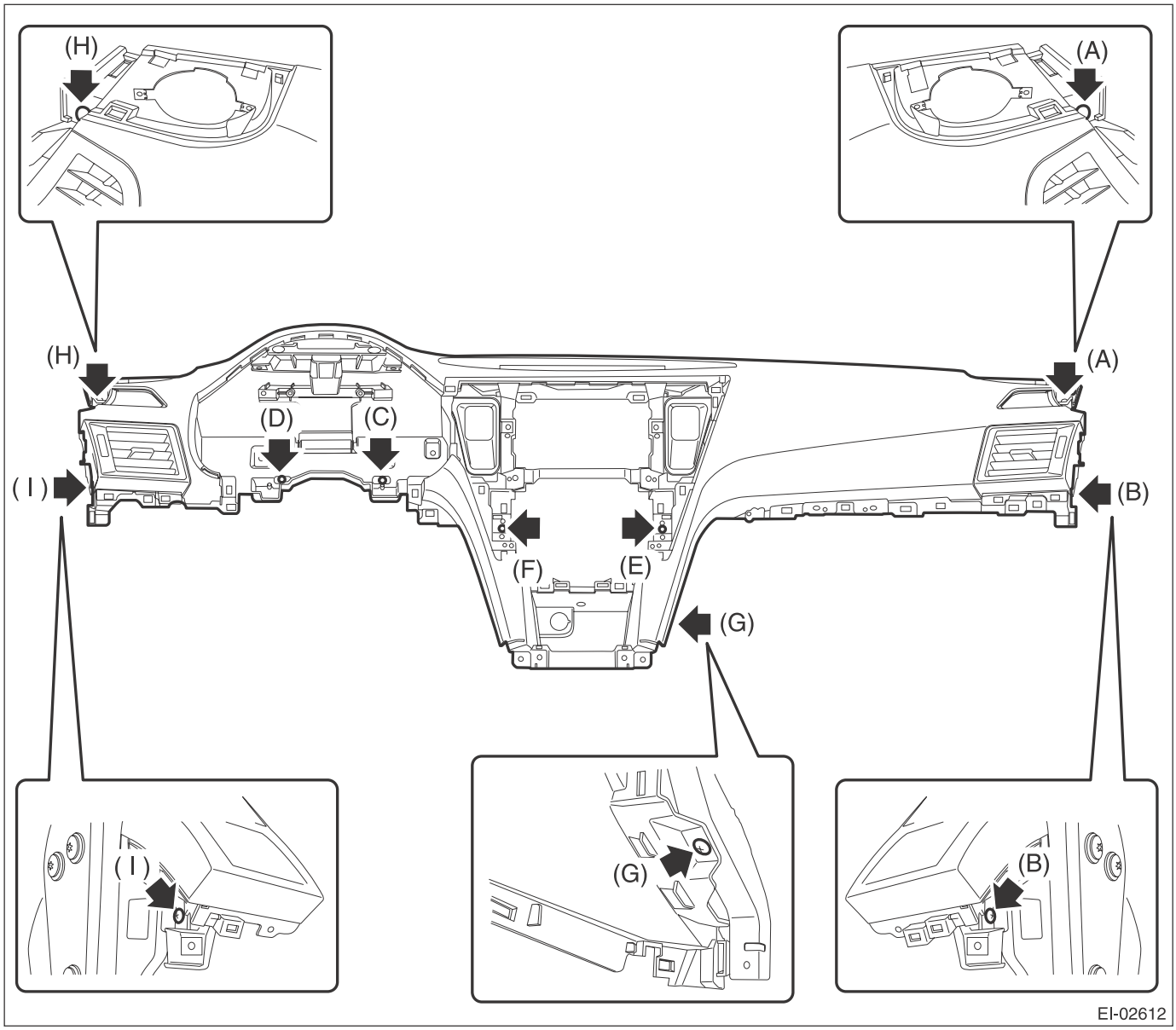

(2) Pull out the instrument panel assembly toward you and release the clamps of the left and right front side speakers.

Preparation tool: Stubby screwdriver

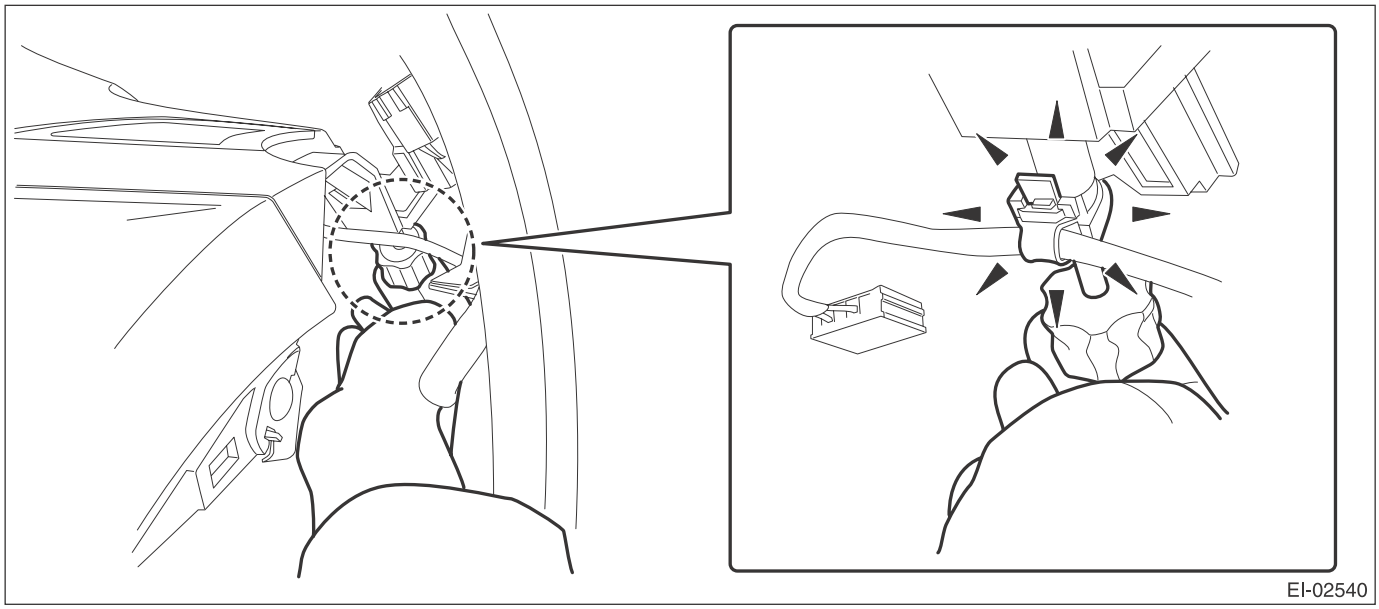

(3) After checking that all harness clamps and connectors are released and disconnected, remove the instrument panel assembly.

CAUTION:
Be careful not to damage the instrument panel surface and interior trims.

22) Remove the heater vent duct.
(1) Remove the screws, and remove the center vent duct.
(2) Release the claws and remove the screws, then detach the side vent duct RH.

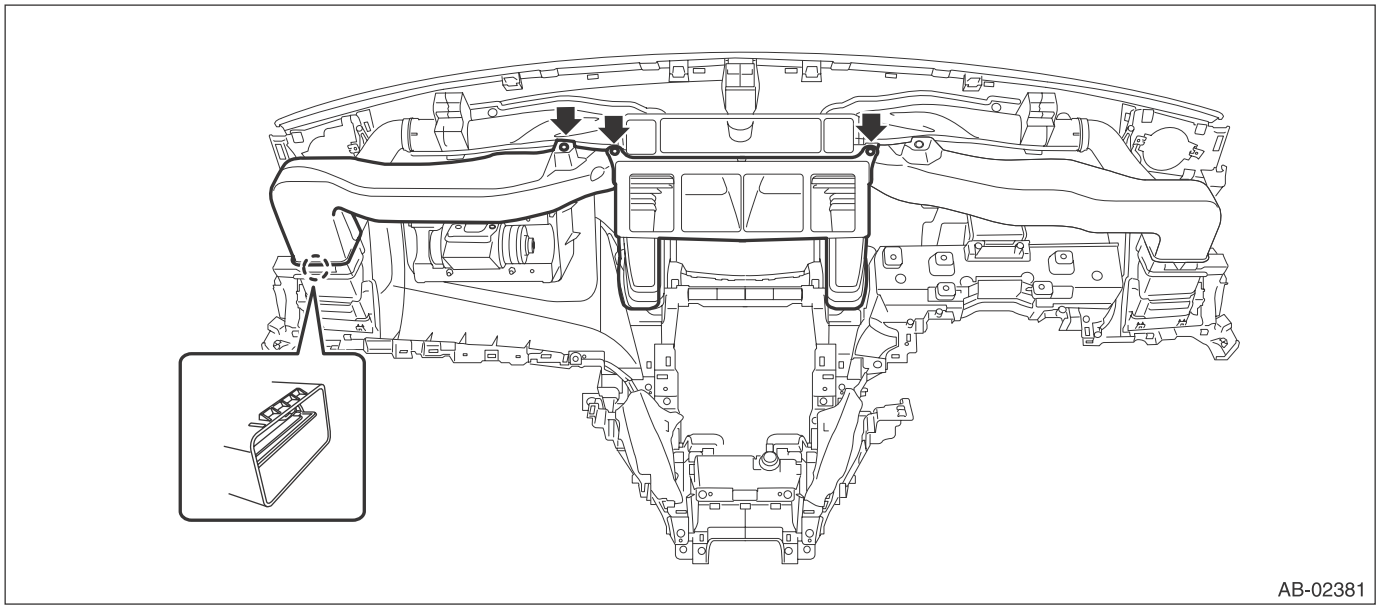

23) Release the claws, and remove the passenger's airbag module.

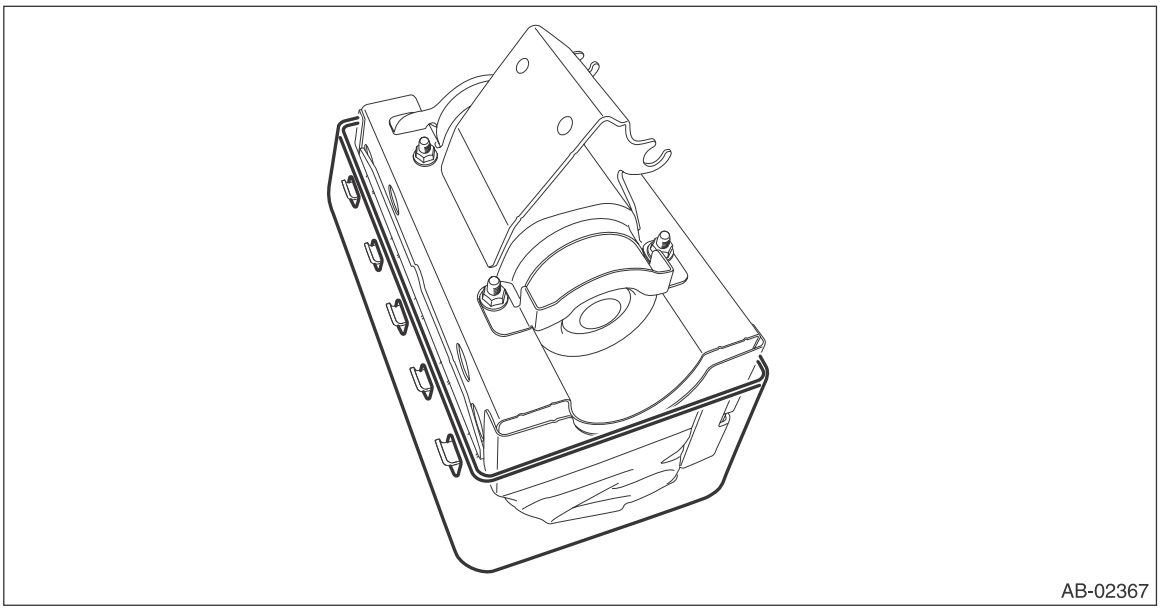

24) Refer to "CAUTION" for handling of a removed airbag module. <Ref. to AB-9, CAUTION, General Description.>

B: INSTALLATION

CAUTION:
• Refer to "CAUTION" of "General Description" before handling the airbag module. <Ref. to AB-9, CAUTION, General Description.>
• Do not allow harness and connectors to interfere or get tangled up with other parts.
• Do not reuse the clips in the upper section of the front pillar trim. Always replace them with new ones.
Once removed from the pillar trim, the clip retention power deteriorates and the front pillar trim may come off.

1) Before installation, inspect the following items and replace any faulty part with a new one.
- Passenger's airbag lid (instrument panel surface) is cracked or deformed.
- Airbag module is cracked or deformed.
- Harness and/or connector is cracked, deformed or open.
- Harness wire is exposed.
- Mounting bracket is cracked or deformed.

2) Install each part in the reverse order of removal.

Tightening torque:
Passenger's airbag module: 7.5 N·m (0.76 kgf-m, 5.5 ft-lb)
Console box: 6.5 N·m (0.66 kgf-m, 4.8 ft-lb)

6. Side Airbag Module

A: REMOVAL

CAUTION:
Refer to "CAUTION" of "General Description" before handling the airbag module. <Ref. to AB-9, CAUTION, General Description.>

NOTE:
Remove the passenger's side by referring to driver's side.
1) Turn the ignition switch to OFF.
2) Disconnect the ground cable from battery and wait for at least 60 seconds before starting work.

NOTE:
For the power seat, remove the slide rail installing bolt before removing the battery ground terminal.
3) Remove the front seats.
   (1) Remove the bolts from the slide rail.
      a) Tilt the backrest forward and move the seat to the front most position.
      b) Remove the rear bolt cover (A) and remove the two bolts.
      c) Move the seat to the rearmost position.
      d) Remove the front bolt cover (B) and remove the two bolts.

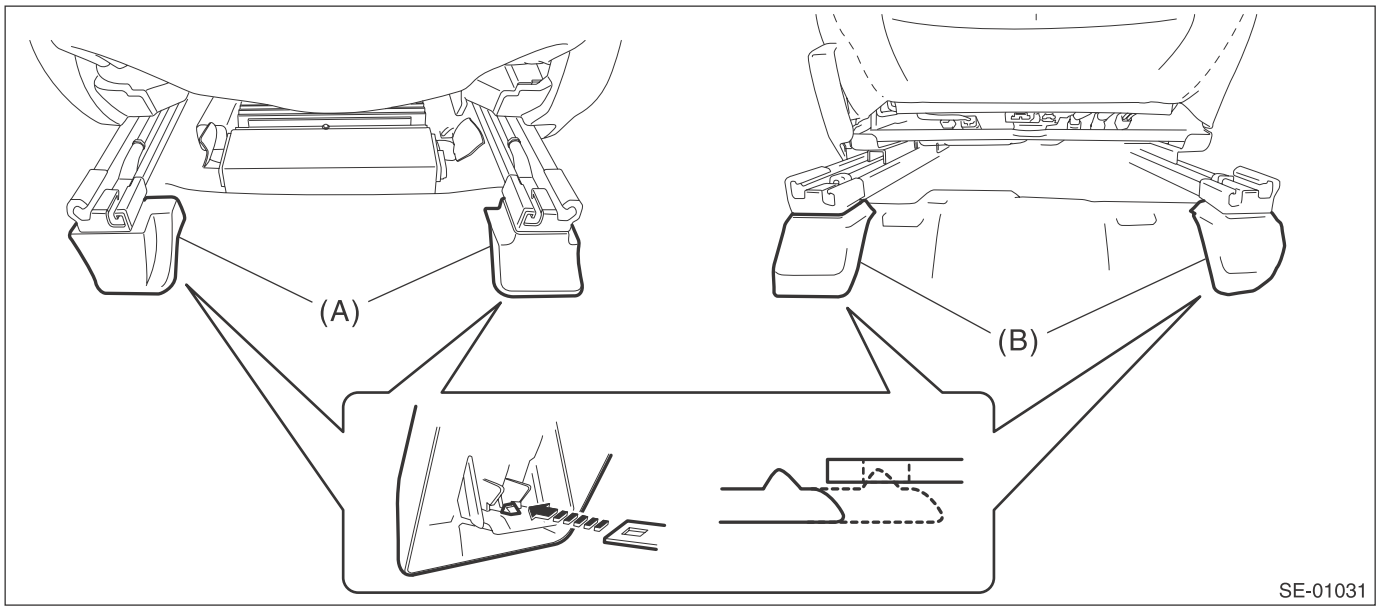

   (2) Disconnect the connector under the seat.

CAUTION:
Disconnect the ground cable from battery, and wait 60 seconds before disconnecting the connector.
- Seat belt warning light connector (driver's seat)
- Occupant detection system harness connector (passenger's seat)
- Side airbag connector
- Seat heater connector (model with seat heater)
- Power seat connector (model with power seats)

   (3) Take out the front seat from the vehicle.

CAUTION:
Be careful not to damage the body.
4) Remove the seat lifter lever. (Manual seat)
   (1) Using a flat tip screwdriver, remove the seat lifter lever cover (a).

(2) Remove the screw and remove the seat lifter lever.

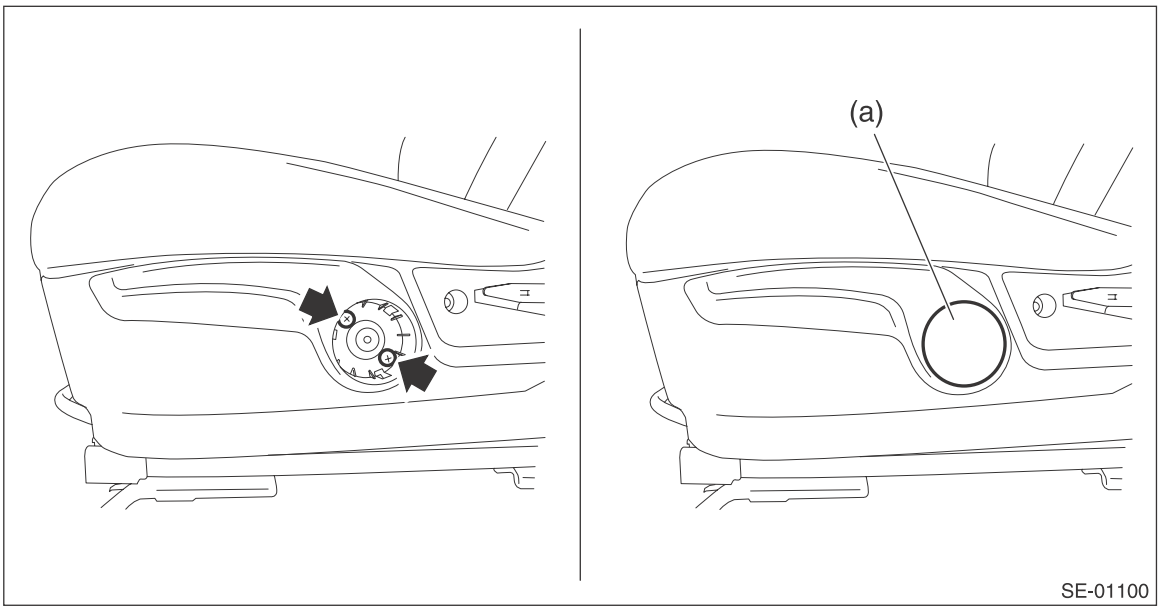

5) Remove the reclining lever cover. (Manual seat)
(1) Pull up the reclining lever and release the claws on the back.
(2) Pull out the reclining lever cover.

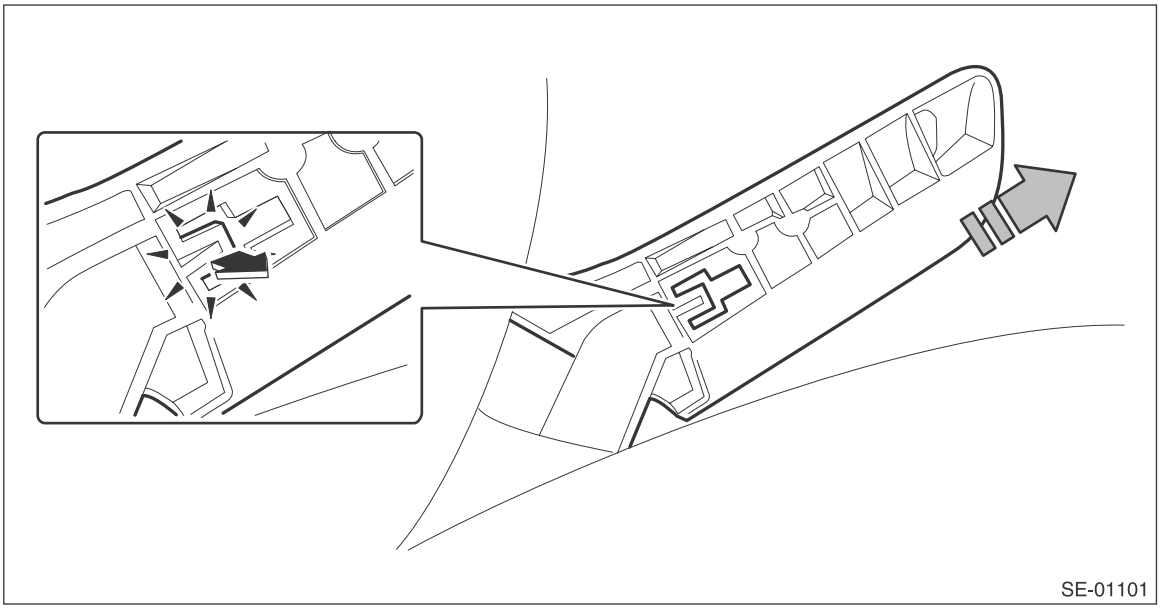

6) Remove the seat side cover OUT.

- MANUAL SEAT
  1. Remove the screws.
  2. Release the claw in the upper section of the seat side cover.
  3. Release the claw in the rear section of the seat side cover.

4. Release the claw in the front section of the seat side cover, then remove the seat side cover OUT.

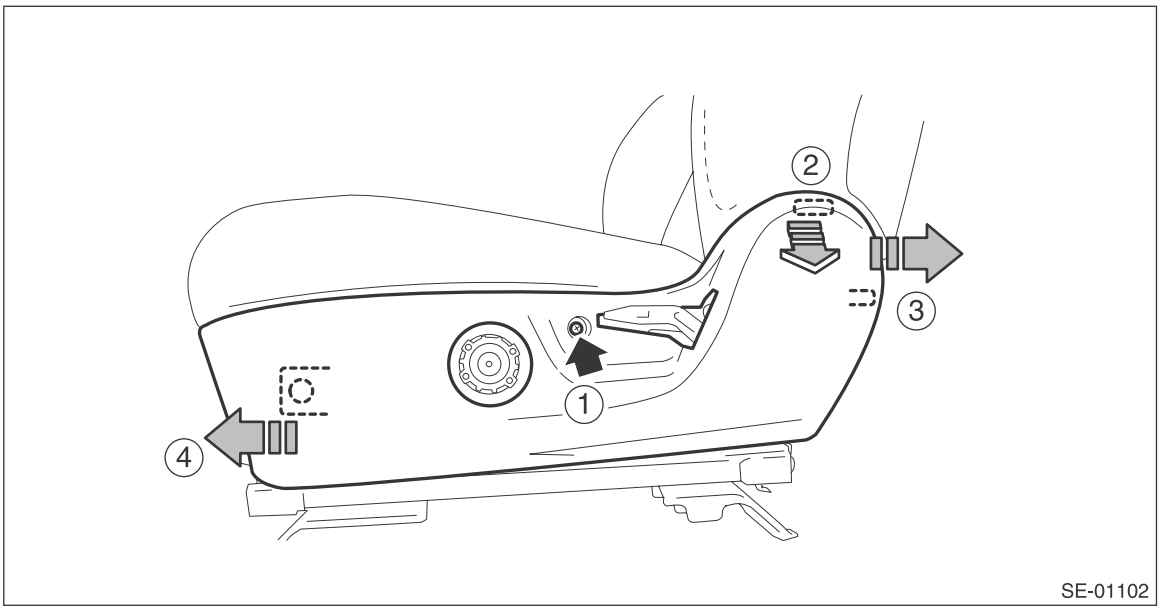

- POWER SEAT
  1. Release the claw in the rear section of the seat side cover.
  2. Release the claw in the upper section of the seat side cover.
  3. Remove the clip and release the claw in the front section of the seat side cover
  4. Disconnect the power seat switch connector and remove the seat side cover OUT.

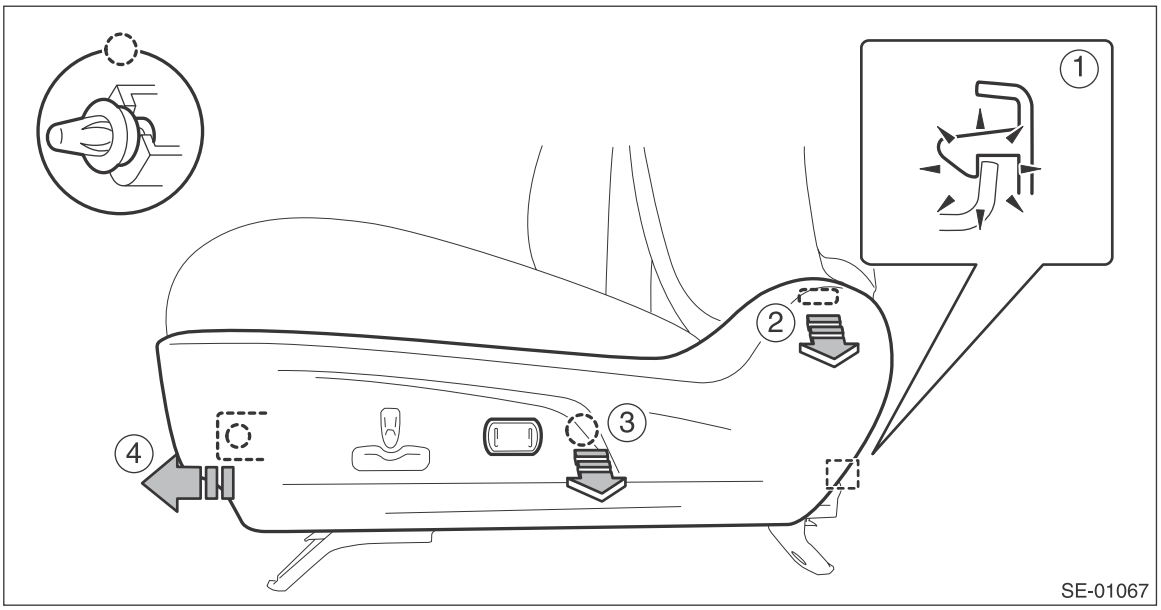

7) Remove the inner seat belt assembly.
   (1) Remove the nut and remove the inner seat belt assembly.

(2) Remove the clip for the inner seat belt harness located under the seat cushion.

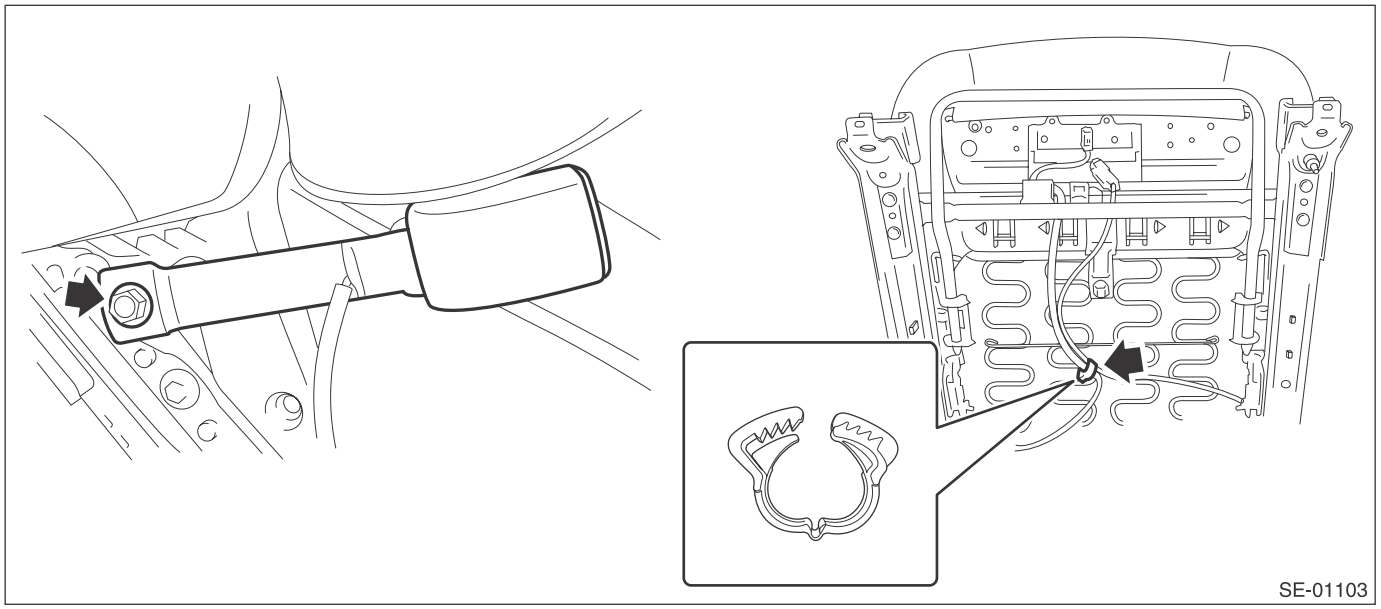

8) Remove the seat side cover IN.

- MANUAL SEAT
  1. Remove the screws.
  2. Release the claw in the upper section of the seat side cover.
  3. Release the claw in the rear section of the seat side cover, then remove the seat side cover IN.

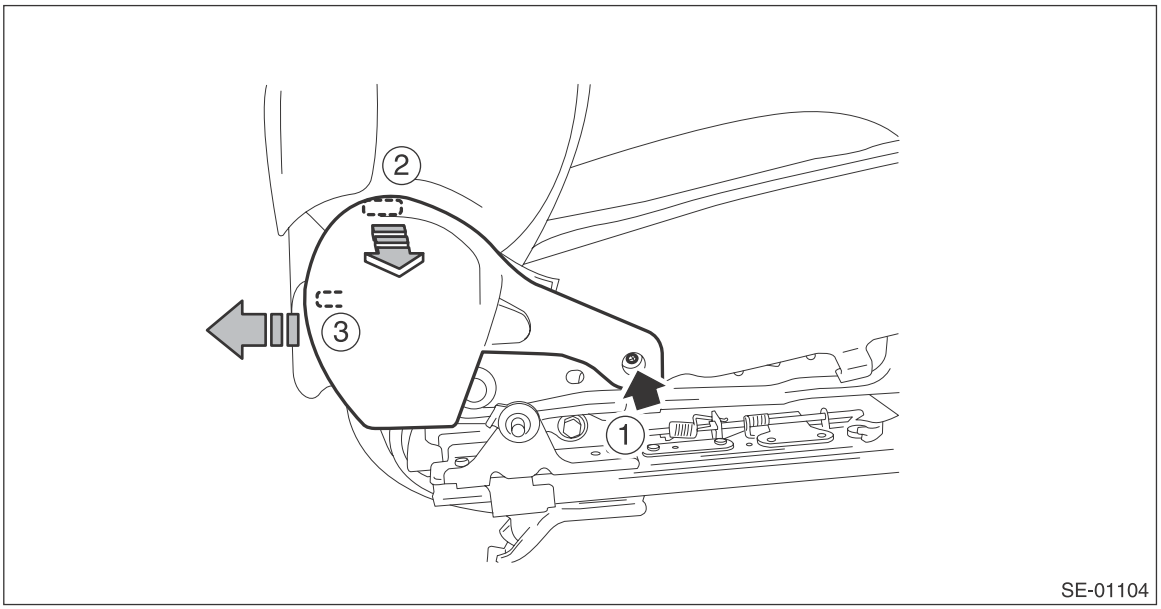

- POWER SEAT
  1. Remove the screws.
  2. Release the claw in the rear section of the seat side cover.

3. Release the claw in the upper section of the seat side cover, then remove the seat side cover IN.

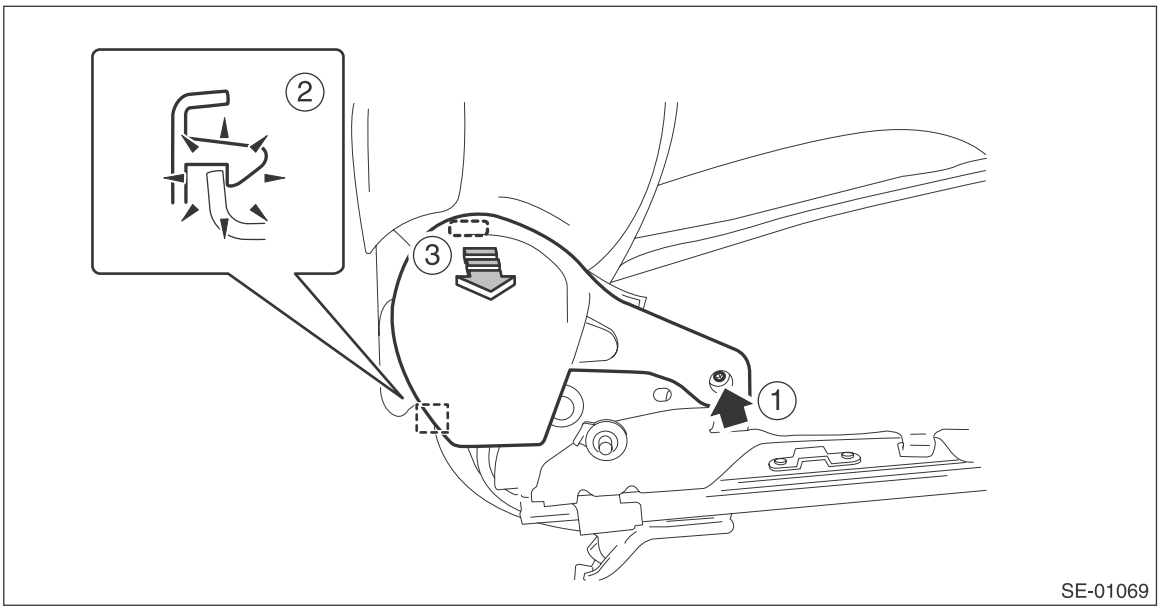

9) Separate the backrest assembly and the seat cushion assembly.
(1) Remove the clip for the side airbag harness located under the seat cushion.
(2) Remove the bolts from the right and left reclining hinges.
(3) While taking care not to damage the airbag harness, separate the backrest assembly and the seat cushion assembly.
• MANUAL SEAT

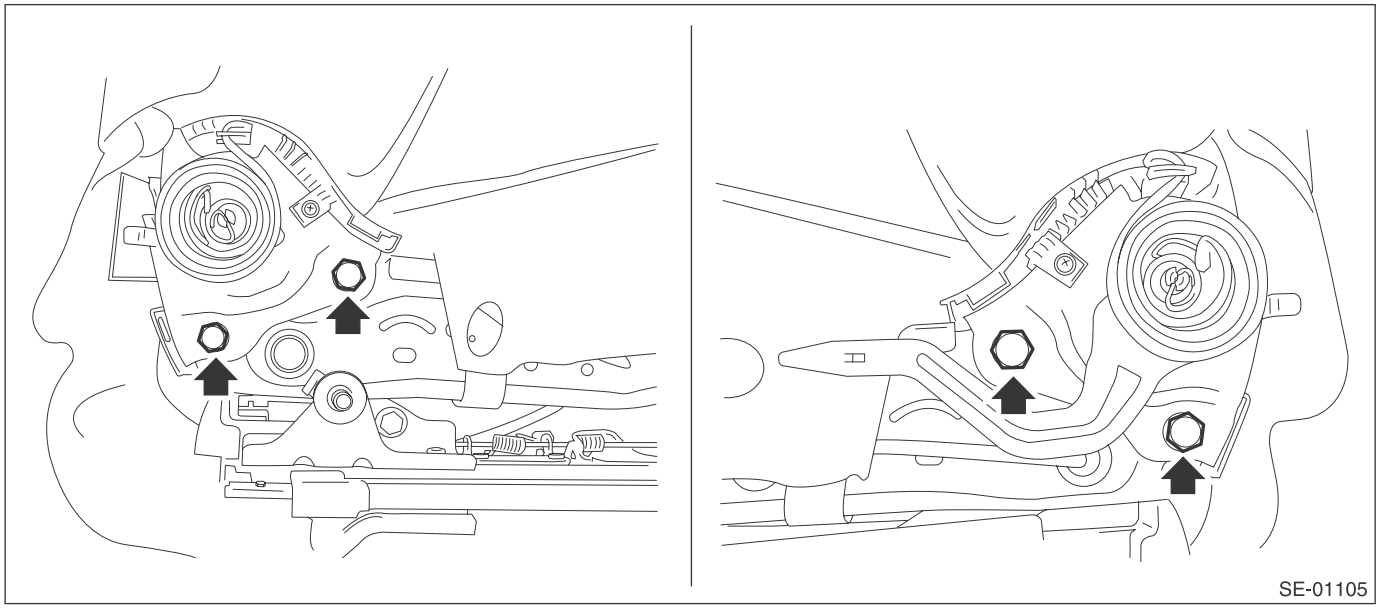

- POWER SEAT

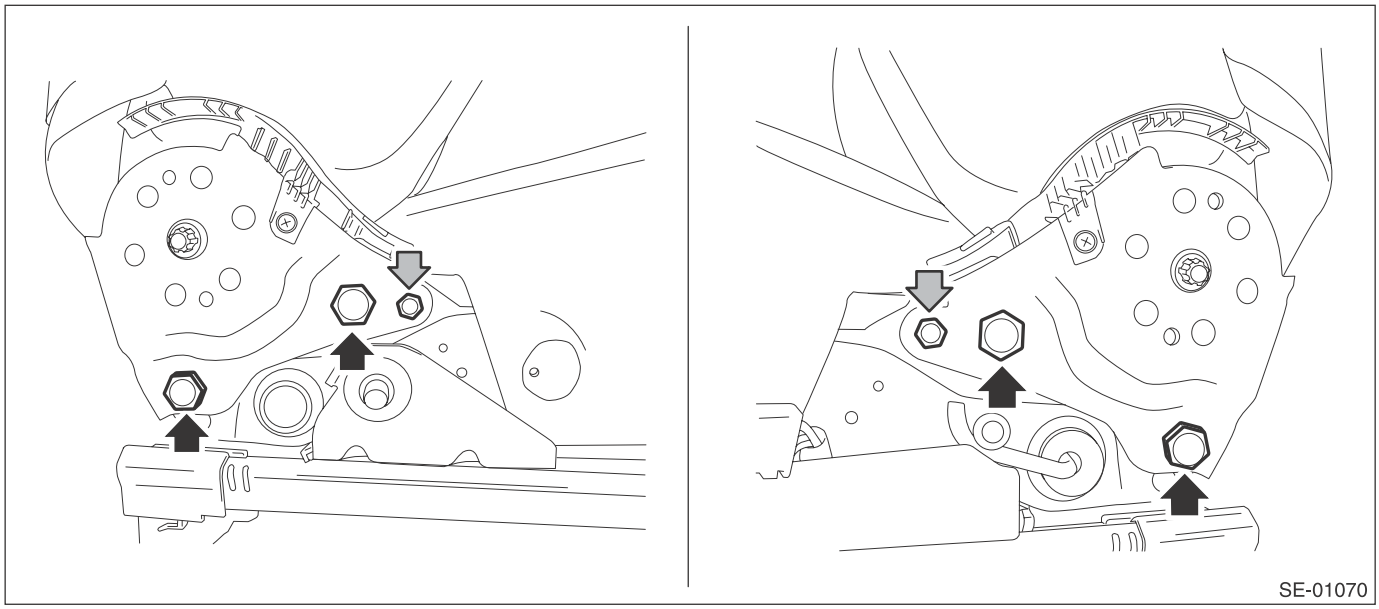

10) Remove the backrest back cover.
(1) Remove the screws.
(2) Release the hooks by pulling down the back cover and remove the backrest back cover.

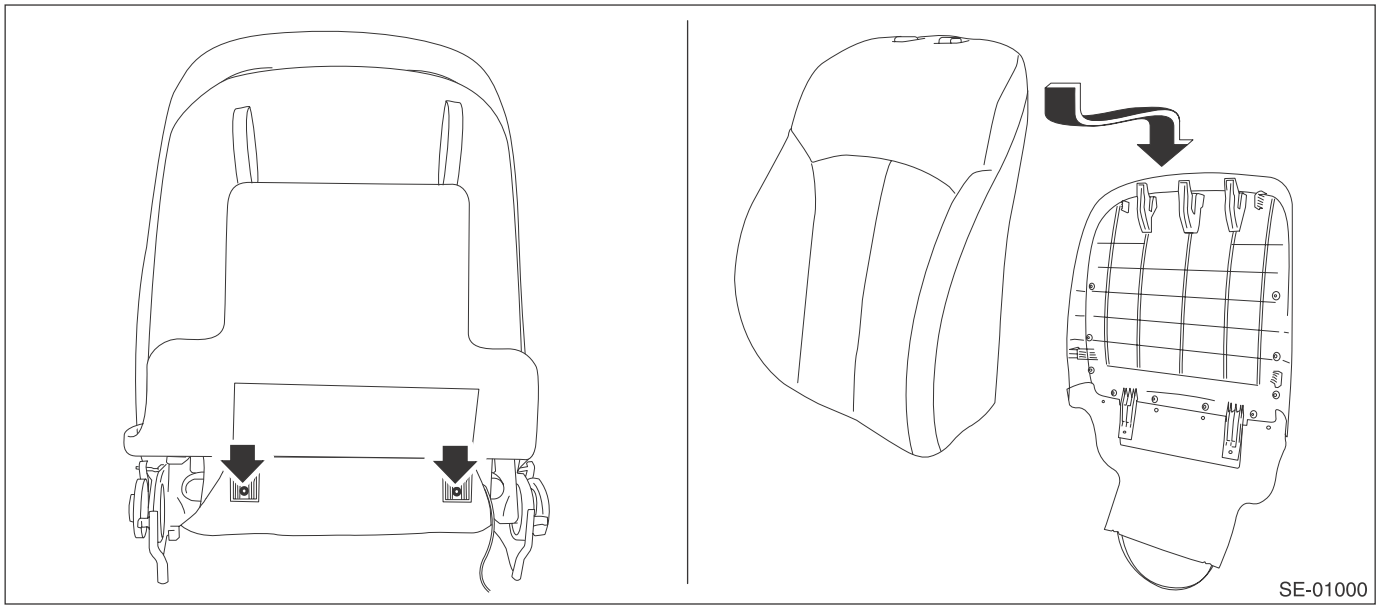

11) Remove the side airbag module assembly.

CAUTION:
• When removing the hog rings, be careful not to tear the vinyl sheet within the seat. If the sheet has torn, replace it with a new sheet.
• Do not open the (plastic) protective cover of the airbag. If any damage is present in the protective cover (such as airbag module cloth coming out), replace the side airbag module assembly with a new one.

(1) Remove the hooks and hog rings.

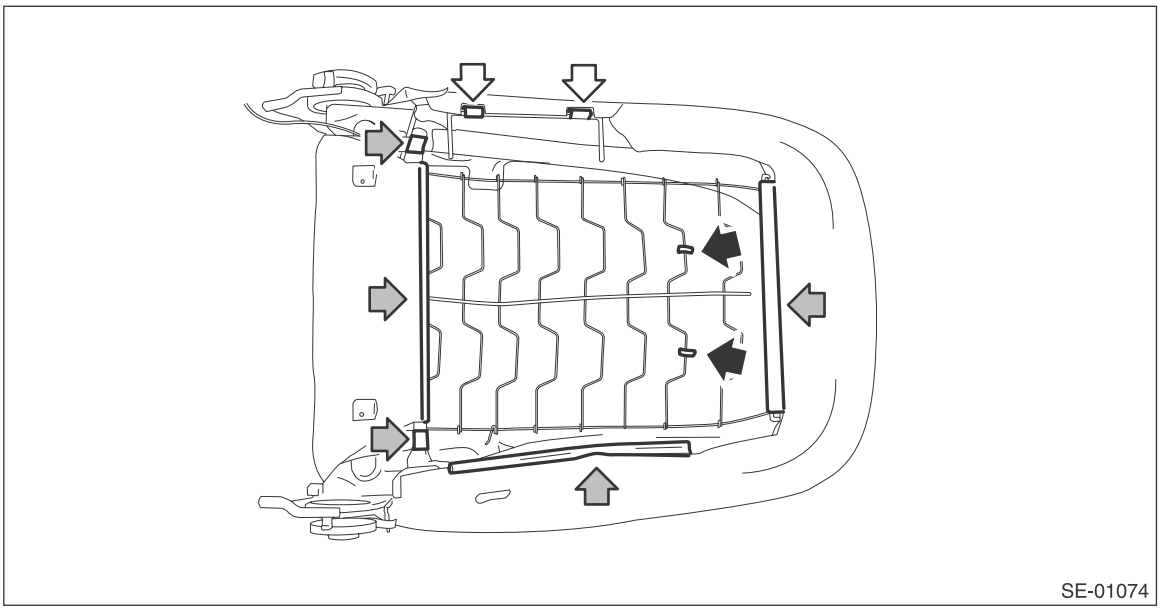

(2) Remove the backrest pad & cover from backrest assembly.
(3) Remove the mounting nuts of the side airbag module.

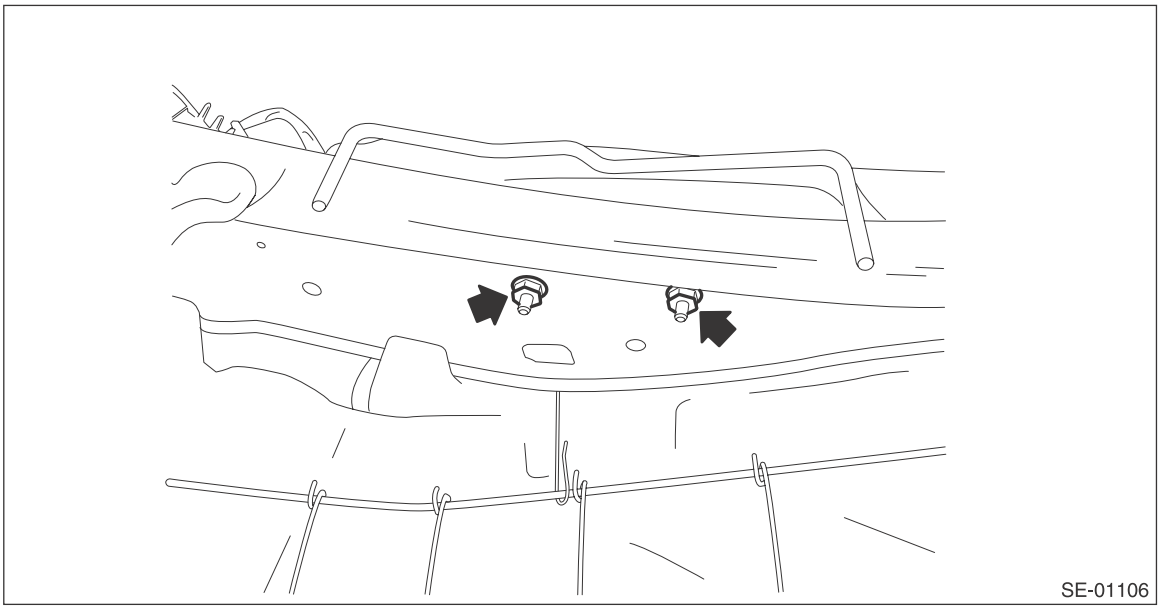

(4) Remove the side airbag harness from backrest frame assembly.
(5) While taking care not to damage the airbag (plastic) protective cover, remove the side airbag module assembly.

B: INSTALLATION

CAUTION:
• Refer to "CAUTION" of "General Description" before handling the airbag module. <Ref. to AB-9, CAUTION, General Description.>
• Be sure to perform the system calibration for occupant detection system after passenger's seat installation. <Ref. to OD(diag)-15, OPERATION, System Calibration (Rezeroing).>
• Make sure that the side airbag module assembly is installed as shown in the figure.

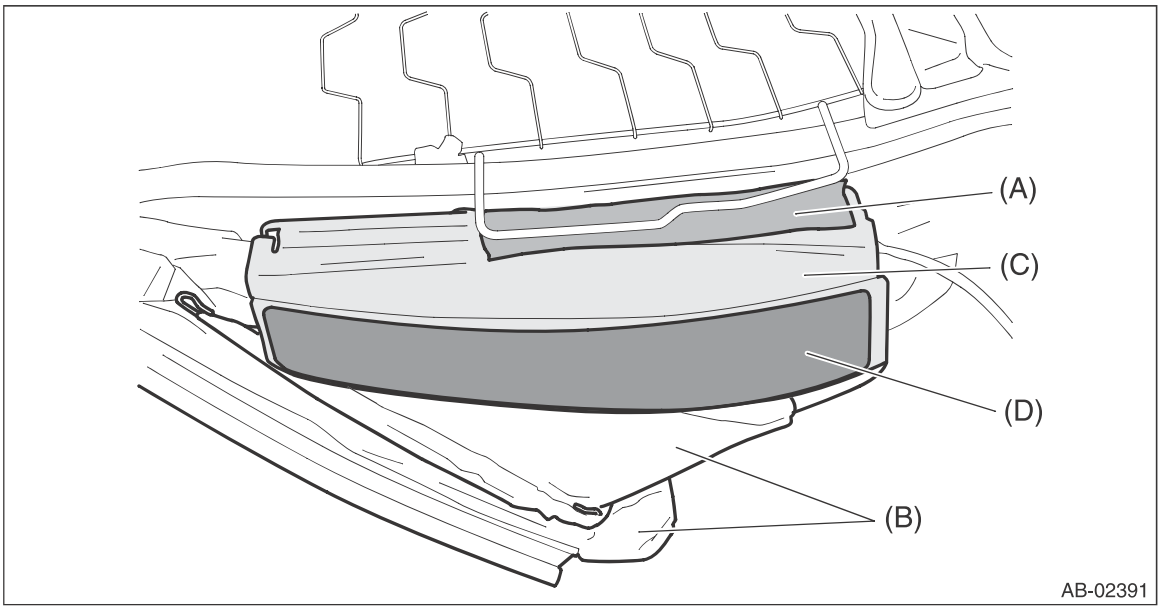

(A) Side airbag guide cloth
(B) Backrest cover
(C) Side airbag module ASSY
(D) Side airbag tape

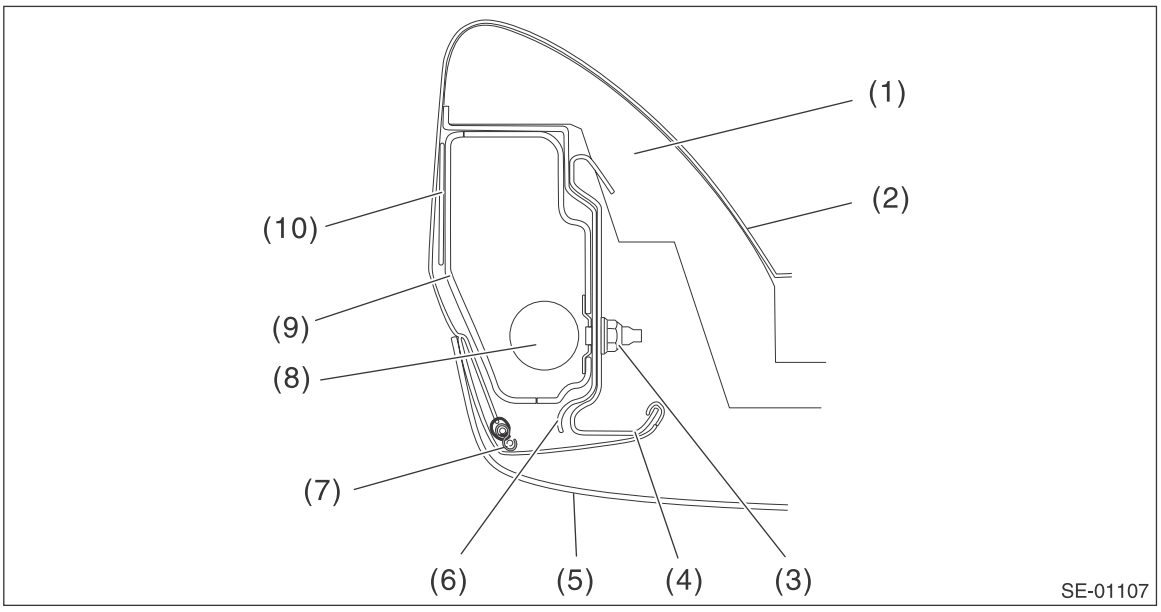

(1) Backrest pad
(2) Backrest cover
(3) Nut
(4) Backrest frame
(5) Backrest back cover
(6) Side airbag guide cloth
(7) S hook
(8) Side airbag module inflator
(9) Side airbag module case
(10) Side airbag tape

- **When replacing the side airbag assembly with new one, be sure to attach the side airbag tape.**
- **Be careful not to stain or damage the backrest cover during assembly.**

- **Do not reuse hog rings and S hooks.**
- **Secure the hog ring using hog ring pliers.**
- **Install the hog rings to the specified points securely and make sure that no wrinkle or twisting on backrest cover.**

1) Before installation, inspect the following items and replace any faulty part with a new one.
- Make sure that there is no foreign matter on side airbag module.
- Front seat, airbag module and mounting bracket are damaged or deformed.
- Harness and/or connector is cracked, deformed or open.
- Harness wire is exposed.

2) Install the side airbag module to the backrest frame assembly.

Tightening torque:
6 N·m (0.61 kgf-m, 4.4 ft-lb)

3) Install the side airbag harness to backrest frame assembly.
4) Install the backrest cover.
5) Secure the backrest hinge.

- MANUAL SEAT

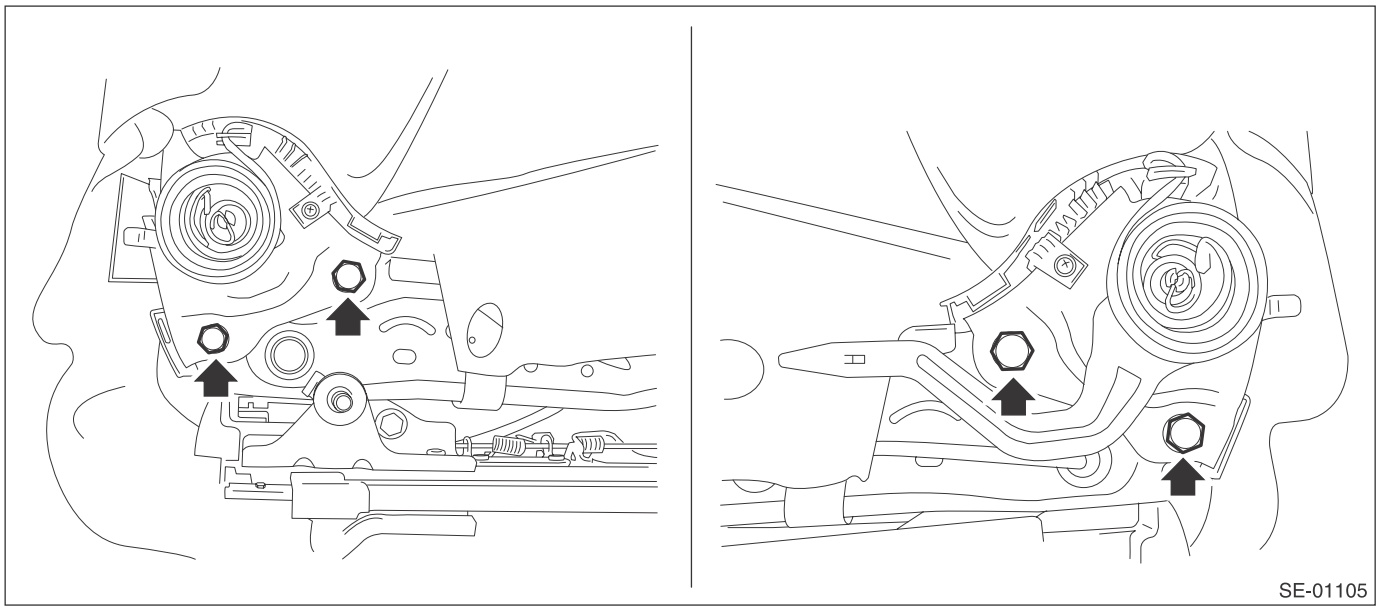
SE-01105

- POWER SEAT

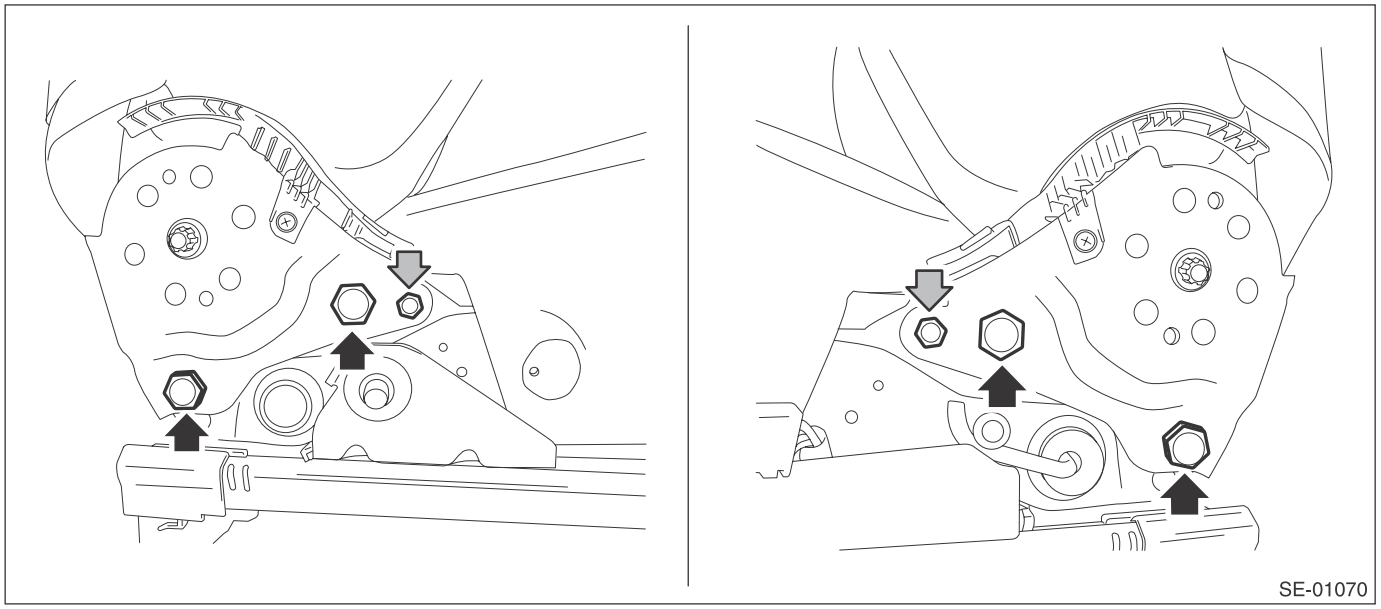
SE-01070

Tightening torque:
Refer to "COMPONENT" of "General Description". <Ref. to SE-2, FRONT SEAT, COMPONENT, General Description.>

6) Install the side airbag harness to the back of the seat cushion assembly using a cable clip.

CAUTION:
After restoring the seat, operate the reclining and sliding mechanisms to check that the side airbag harness is not caught.

7) Install the front seat to the body.

CAUTION:
• The seat mounting bolts differ between the front mounting points and the rear mounting points. Make sure that you are using correct bolts at correct positions.
• Tighten the slide rail installing bolt gradually in several steps to the specified torque in the order as shown in the figure.

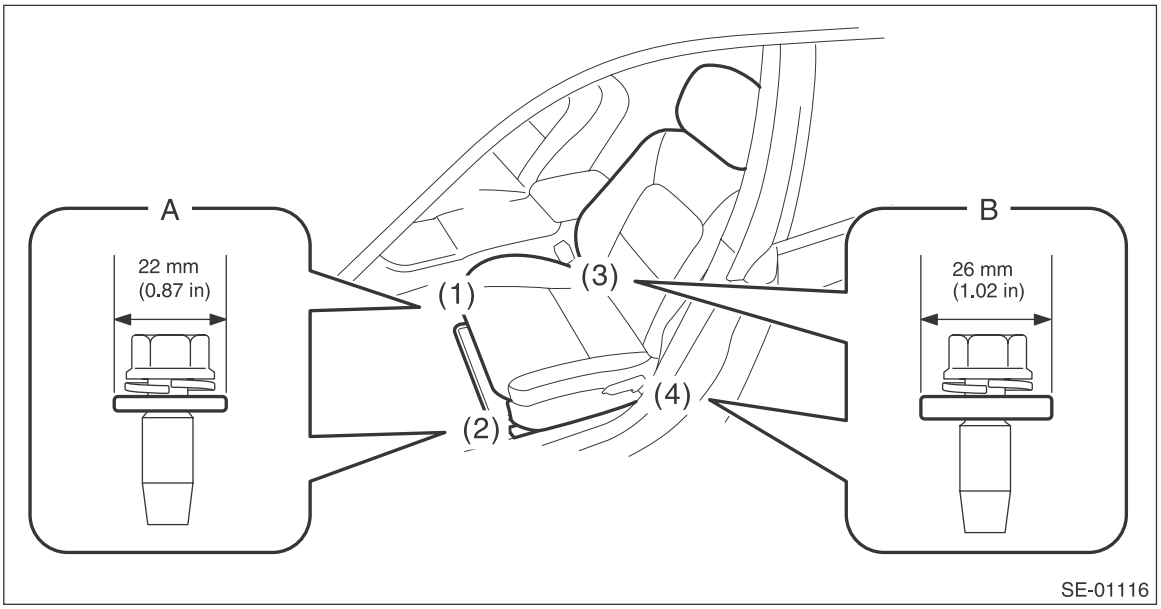

- **Front (bolt A): Washer diameter 22 mm (0.87 in)**
- **Rear (bolt B): Washer diameter 26 mm (1.02 in)**

Tightening torque:
Front seat assembly: 53 N·m (5.4 kgf-m, 39.1 ft-lb)

7. Curtain Airbag Module

A: REMOVAL

1. SEDAN MODEL

CAUTION:
Refer to "CAUTION" of "General Description" before handling the airbag module. <Ref. to AB-9, CAUTION, General Description.>
1) Turn the ignition switch to OFF.
2) Disconnect the ground cable from battery and wait for at least 60 seconds before starting work.
3) Remove the roof trim. <Ref. to EI-131, SEDAN MODEL, REMOVAL, Roof Trim.>
4) Remove the curtain airbag module assembly.

CAUTION:
- **Be careful not to damage the curtain airbag module during removal.**
- **Never open the curtain airbag module before activation. Never reuse the deployed curtain airbag module.**
- **Remove the modules in order starting from the vehicle front.**

(1) Remove all bolts and clips, and remove the curtain airbag module assembly.

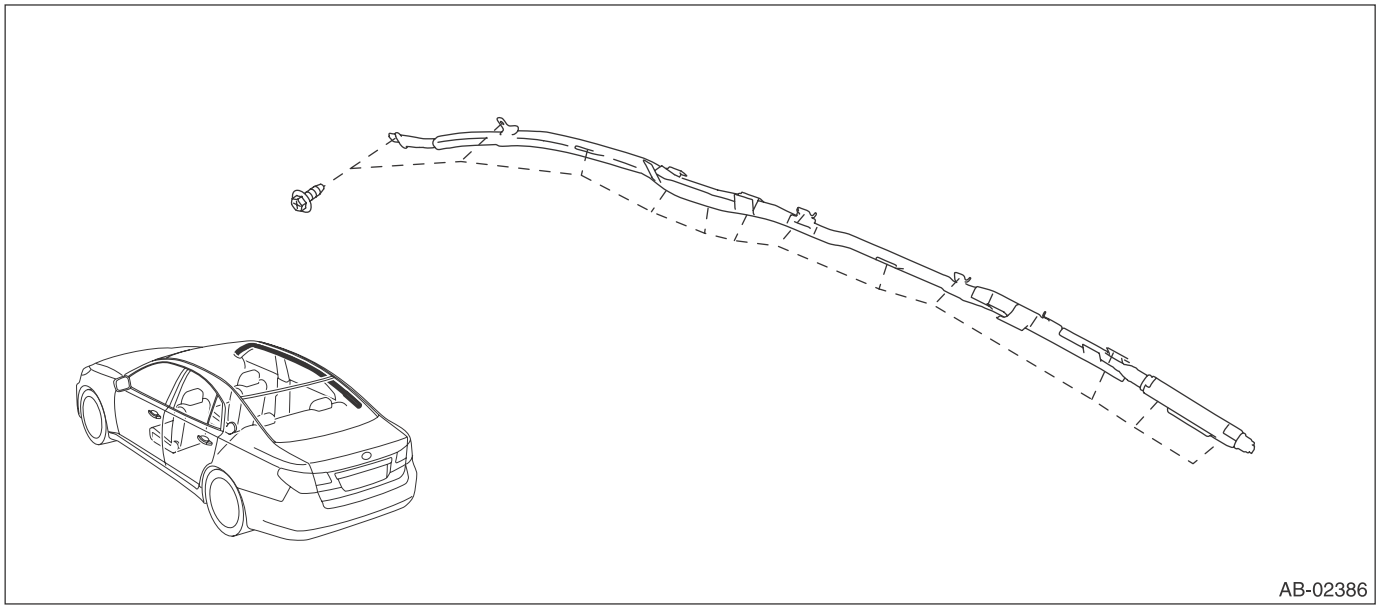

(2) Disconnect the curtain airbag module connector.

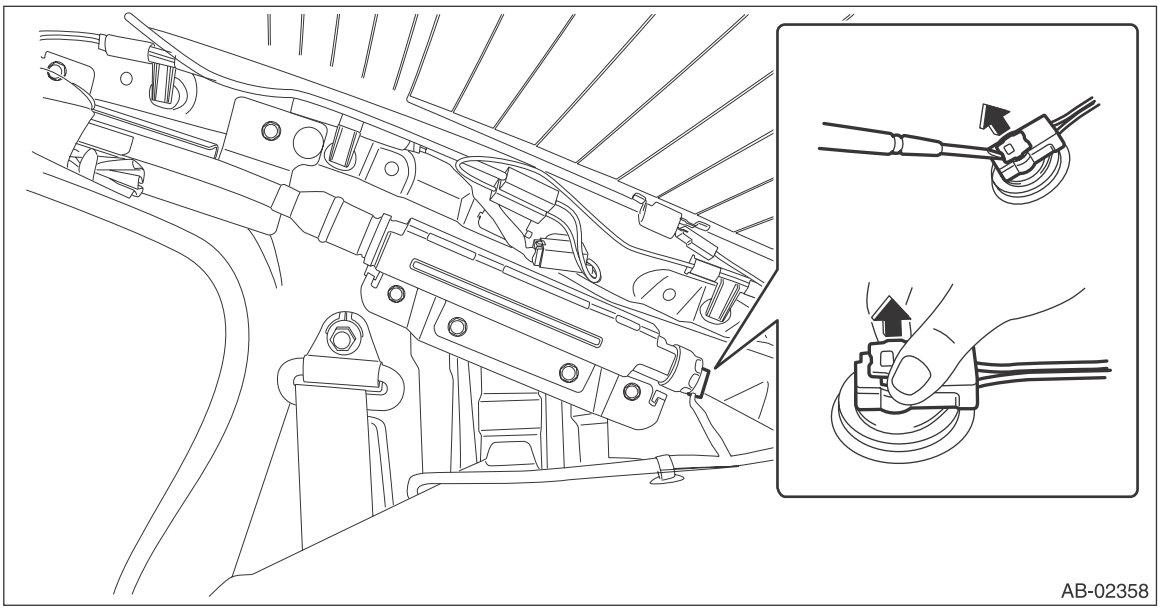

2. OUTBACK MODEL

CAUTION:
Refer to "CAUTION" of "General Description" before handling the airbag module. <Ref. to AB-9, CAUTION, General Description.>

1) Turn the ignition switch to OFF.
2) Disconnect the ground cable from battery and wait for at least 60 seconds before starting work.
3) Remove the roof trim. <Ref. to EI-146, OUTBACK MODEL, REMOVAL, Roof Trim.>
4) Remove the curtain airbag module assembly.

CAUTION:
- **Be careful not to damage the curtain airbag module during removal.**
- **Never open the curtain airbag module before activation. Never reuse the deployed curtain airbag module.**
- **Remove the modules in order starting from the vehicle front.**

(1) Remove all bolts and clips, and remove the curtain airbag module assembly.

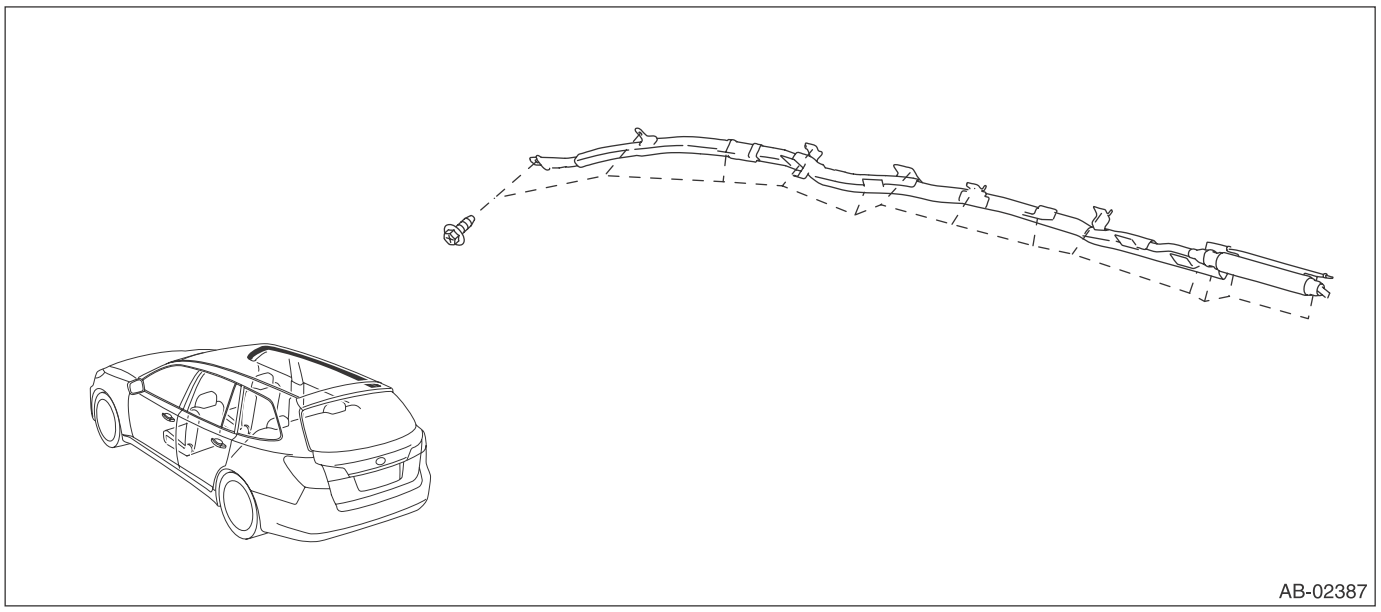

(2) Disconnect the curtain airbag module connector.

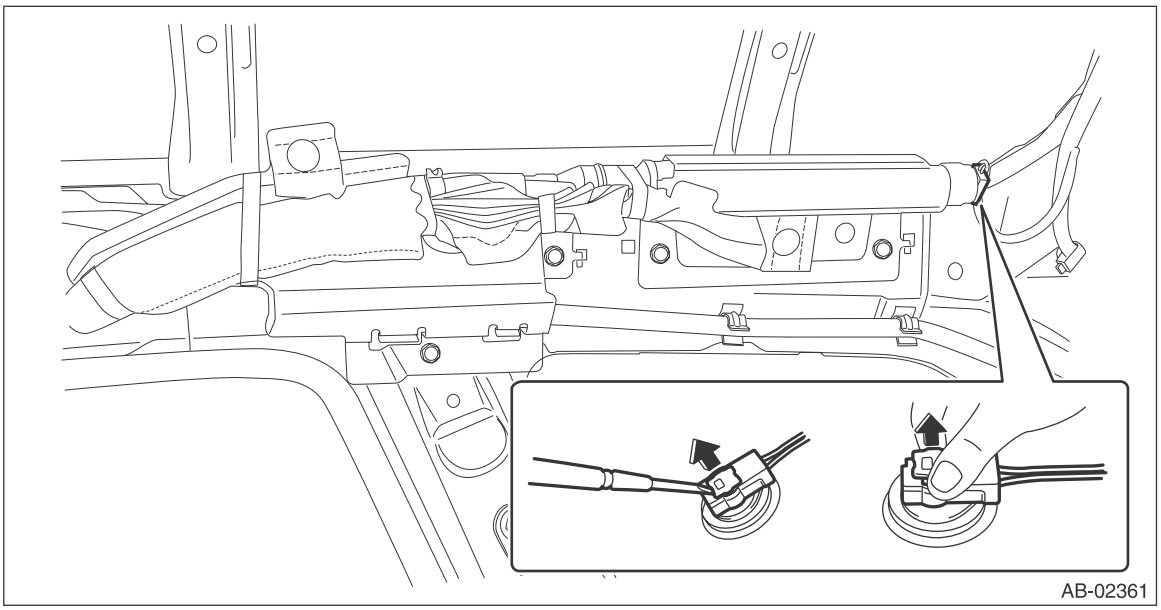

B: INSTALLATION

CAUTION:
• Refer to "CAUTION" of "General Description" before handling the airbag module. <Ref. to AB-9, CAUTION, General Description.>
• When installing the curtain airbag module, install a specified part at specified place.
• Be careful not to damage the curtain airbag module during removal.
• Never open the curtain airbag module before activation. Never reuse the deployed curtain airbag module.
• Make sure that there are no foreign matter on airbag module.

1) Before installation, inspect the following items and replace any faulty part with a new one.
- Airbag cover is scratched or torn.
- Harness and/or connector is cracked, deformed or open.
- Harness wire is exposed.
- Mounting bracket and securing clip are cracked or deformed.

2) Install each part in the reverse order of removal.

CAUTION:
• Do not reuse the clips on the upper part of the front pillar trim. Always replace with a new part. Once the clip is removed from the pillar trim, the retention power deteriorates and the front pillar trim may come off.
• Do not reuse the upper clips of the center pillar trim UPR. Once the clip is removed, its holding force is reduced. Be sure to replace it with a new clip.
• Before installing the front pillar trim, check the condition of (white) protective unwoven cloth of curtain airbag. If it is damaged (airbag module cloth is exposed), replace the curtain airbag module assembly with a new part.

Tightening torque:
7.5 N·m (0.76 kgf-m, 5.5 ft-lb)

8. Airbag Control Module

A: REMOVAL

CAUTION:
- **Do not disassemble the airbag control module.**
- **If the airbag control module is deformed or if the fault occurs by water, replace the airbag control module with a new part.**
- **Do not drop the airbag control module.**
- **After removal, keep the airbag control module on a dry, clean surface away from moisture, heat and dust.**

1) Turn the ignition switch to OFF.

CAUTION:
Disconnect the ground cable from battery and wait for at least 60 seconds before starting work.

NOTE:
For a model with power seat, remove the console box assembly before disconnecting the battery ground cable.

2) Remove the console front cover assembly.
- MT model
  1. Remove the shift knob.
  2. Release the clips and claws, then pull up the console front cover assembly.

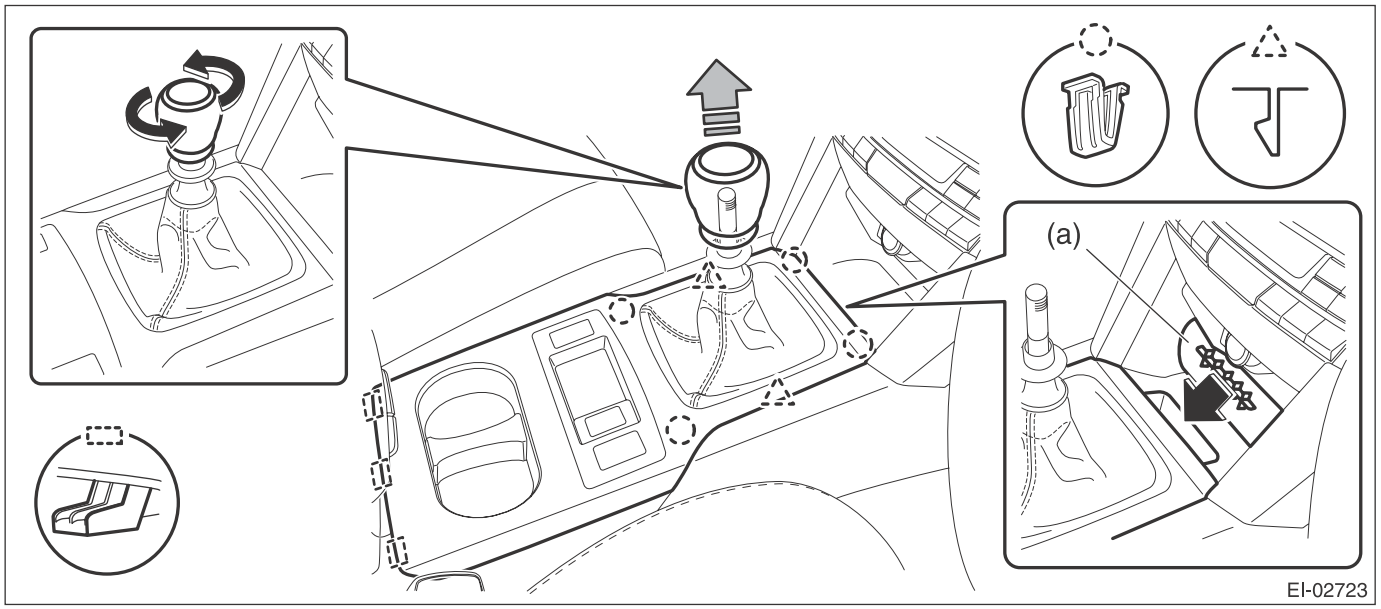

NOTE:
Turn over the front center pocket mat (a) and pull up the console front cover from the slit.

  3. Disconnect the harness connector and remove the console front cover assembly.
- AT model
  1. Remove the select lever knob.
     a. Lower the cover grip AT.
     b. Remove the clamp grip pin, then remove the select lever knob.

2. Release the clips and claws, then pull up the console front cover assembly.

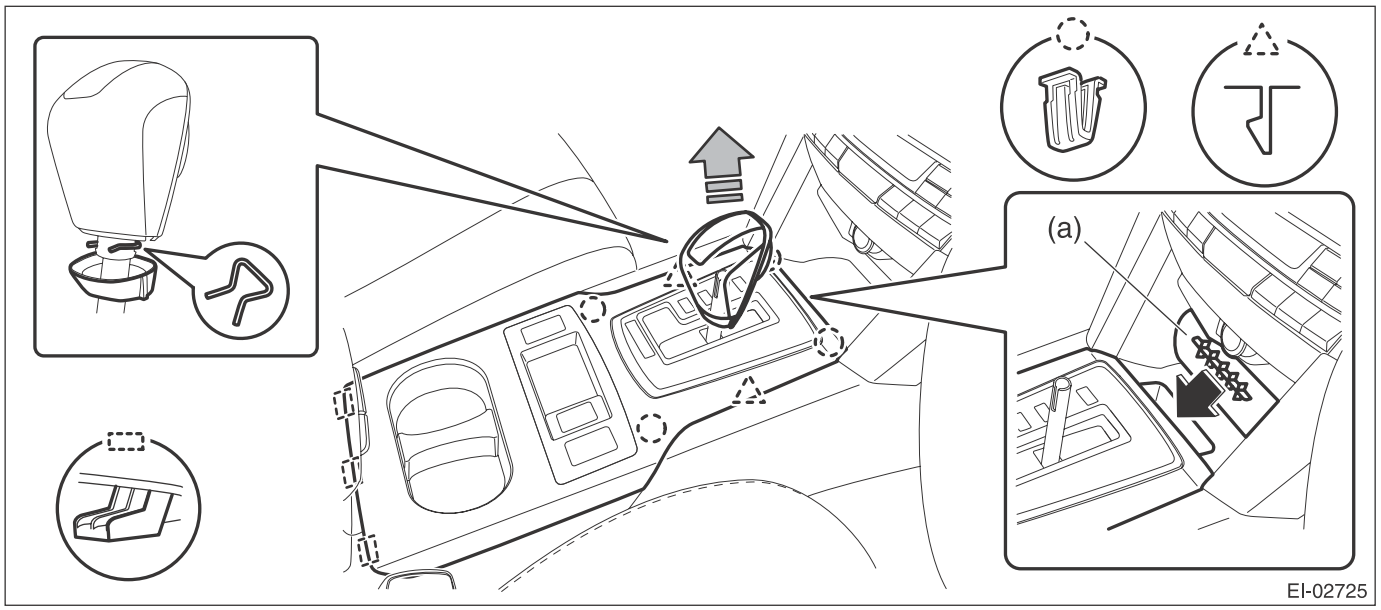

NOTE:
Turn over the front center pocket mat (a) and pull up the console front cover from the slit.

3. Disconnect the harness connector and remove the console front cover assembly.

3) Remove the left and right console front side cover assembly.
(1) Remove the screws and release the clips (A) to (D) in order.
(2) Remove the console front side cover assembly by pulling it up.

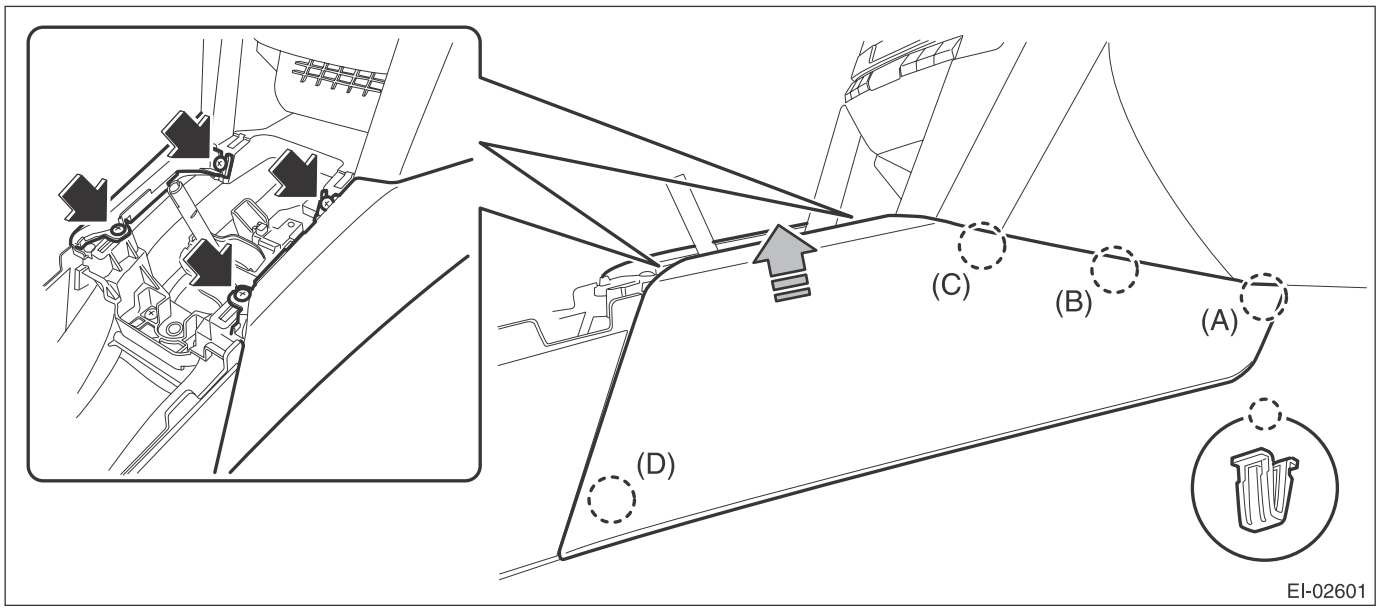

4) Remove the console box assembly.
(1) Move the seat forward, and remove the bolts after detaching the left and right caps.

NOTE:
For a model with power seat, connect the battery ground cable and move the seat. Then, disconnect the battery ground cable again and wait for 60 seconds at least before restarting the work.

(2) Remove the screws, disconnect the harness connector and remove the console box assembly.

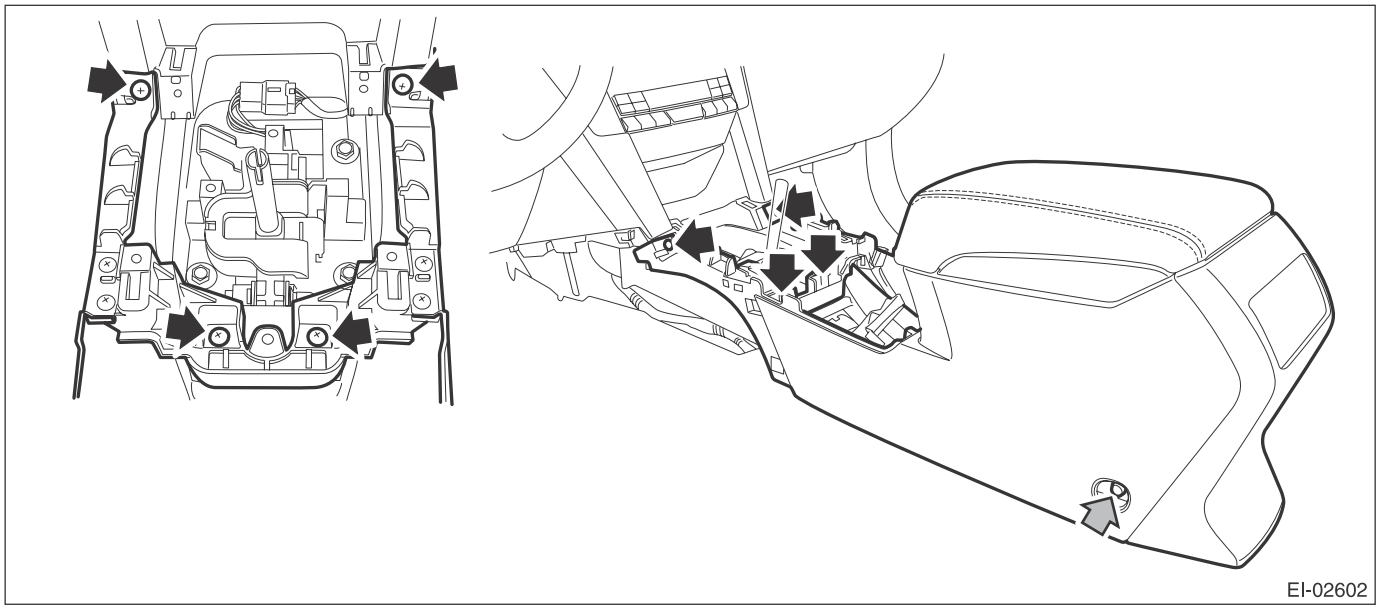

5) Remove the airbag control module.
(1) Disconnect the connector from airbag control module.
(2) Remove the bolt and nuts and remove the airbag control module.

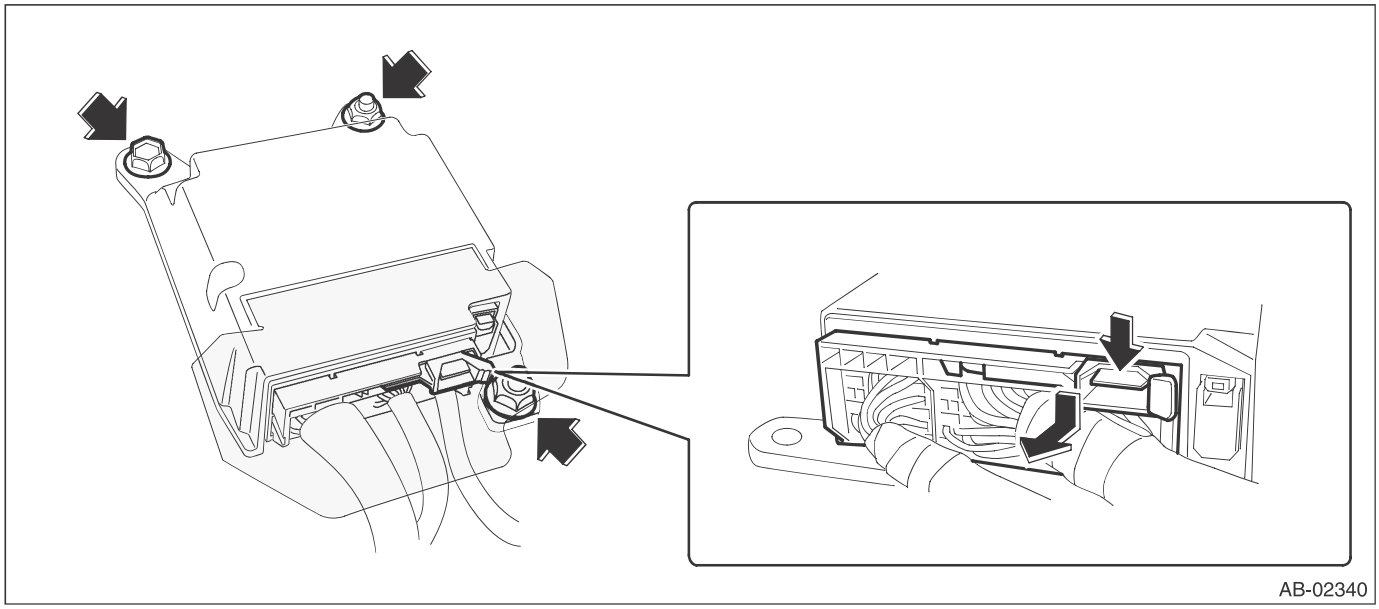

B: INSTALLATION

CAUTION:
Do not reuse the bolt and nut.
Always use new bolts and nuts for them.

1) Before installation, inspect the following items and replace any faulty part with a new one.
- Control module is deformed.
- Control module connector is damaged.
- Control module mounting bracket is damaged.

2) Install each part in the reverse order of removal.

Tightening torque:
Airbag control module: 25 N·m (2.55 kgf-m, 18.4 ft-lb)
Console box assembly: 6.5 N·m (0.66 kgf-m, 4.8 ft-lb)

9. Front Sub Sensor

A: REMOVAL

1) Turn the ignition switch to OFF.
2) Disconnect the ground cable from battery and wait for at least 60 seconds before starting work.
3) Remove the front bumper face assembly.
   (1) Remove the clips, turn over the front mud guard, and disconnect the fog light connector. (Model with fog light)

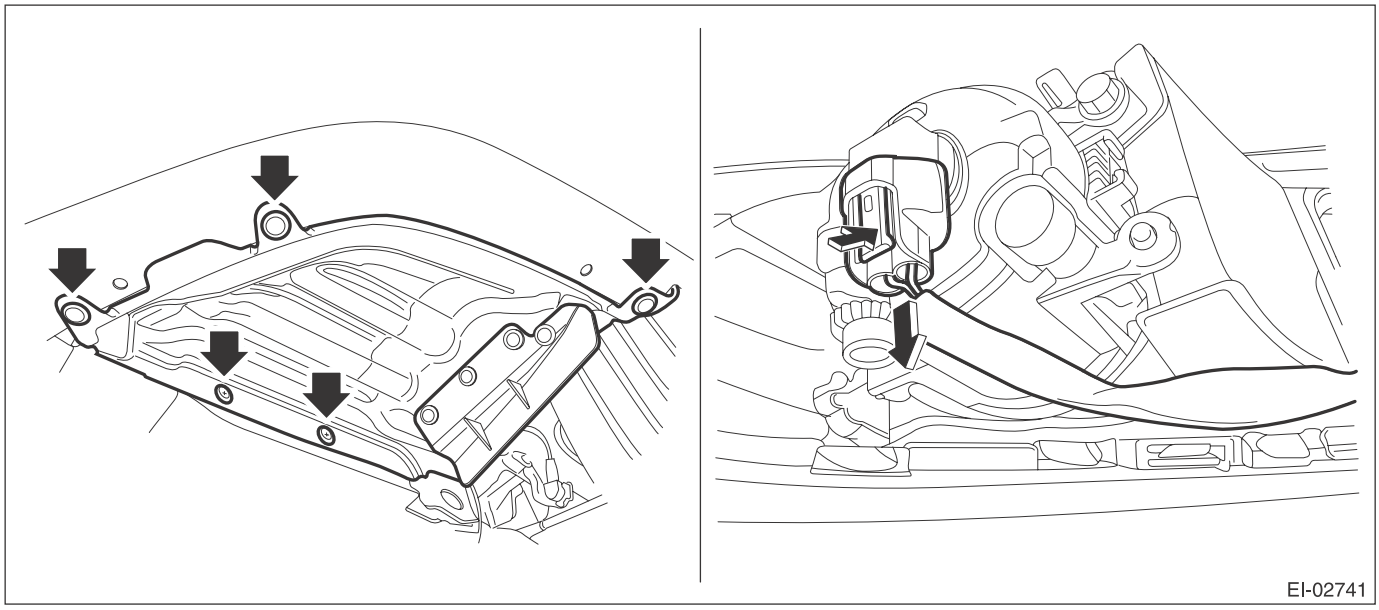

   (2) Remove the clips at the upper side of the bumper.
   (3) Remove the clips from the fender.

(4) Remove the clips at the lower side of bumper.

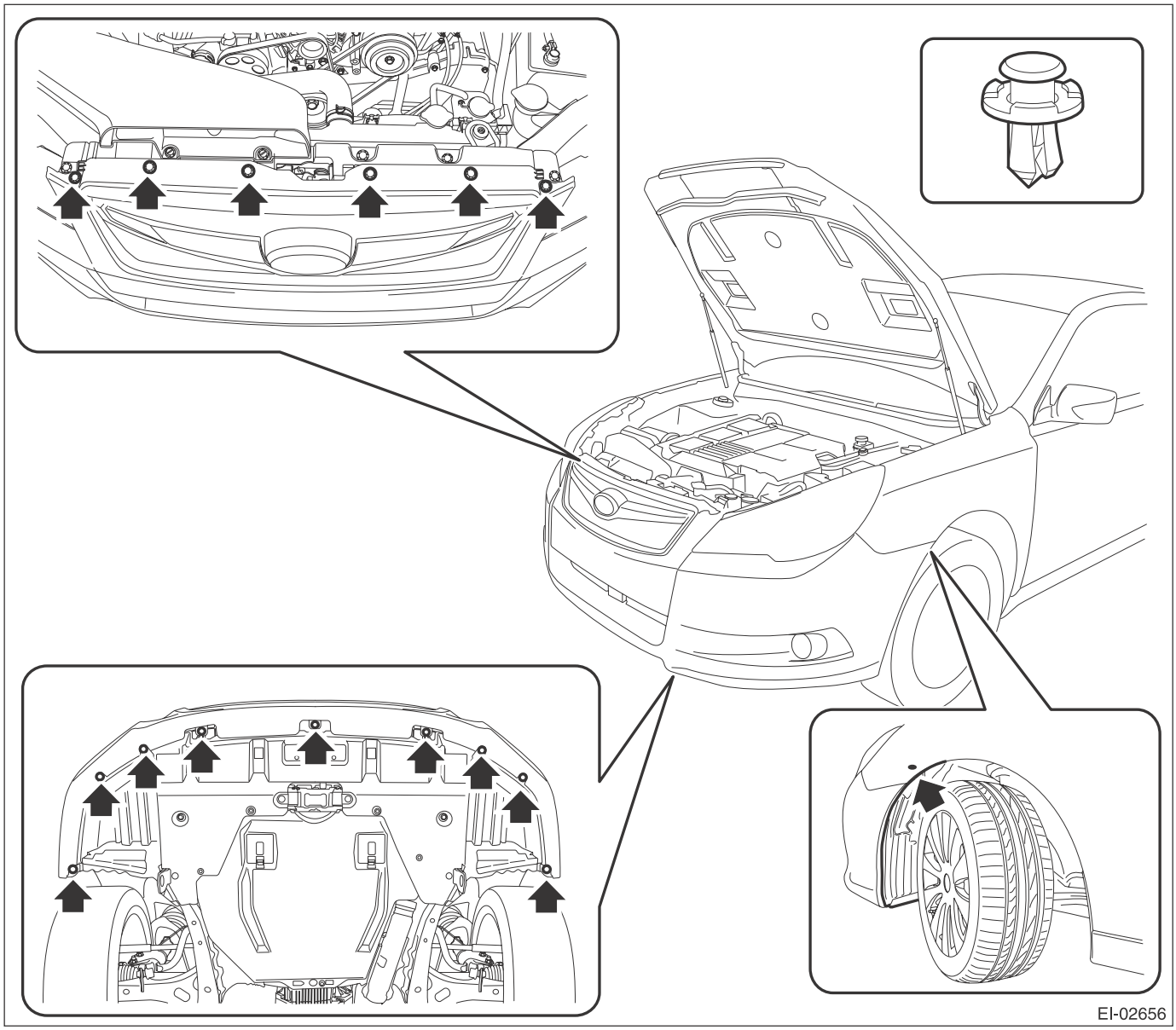

(5) Detach the flange section on the bumper face side from the bracket side front UPR.

CAUTION:
Do not pull forcibly. It may damage the flange sections of the bumper face.

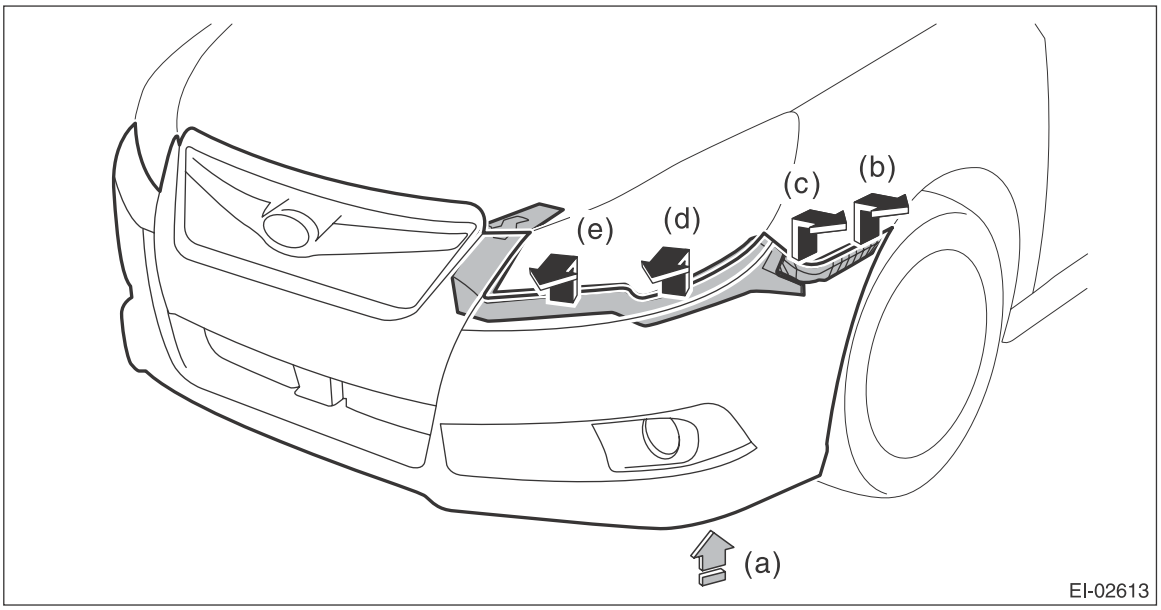

NOTE:
While pushing upward the underside of the fog light (a), remove from (b) through (e) in order.
Detach the opposite side in the same manner.

4) Remove the headlight assembly.
(1) Remove the fender cover assembly UPR.
a) Remove the clip.
b) Release the claws of the fender cover assembly UPR by pulling it forward and remove the fender cover.

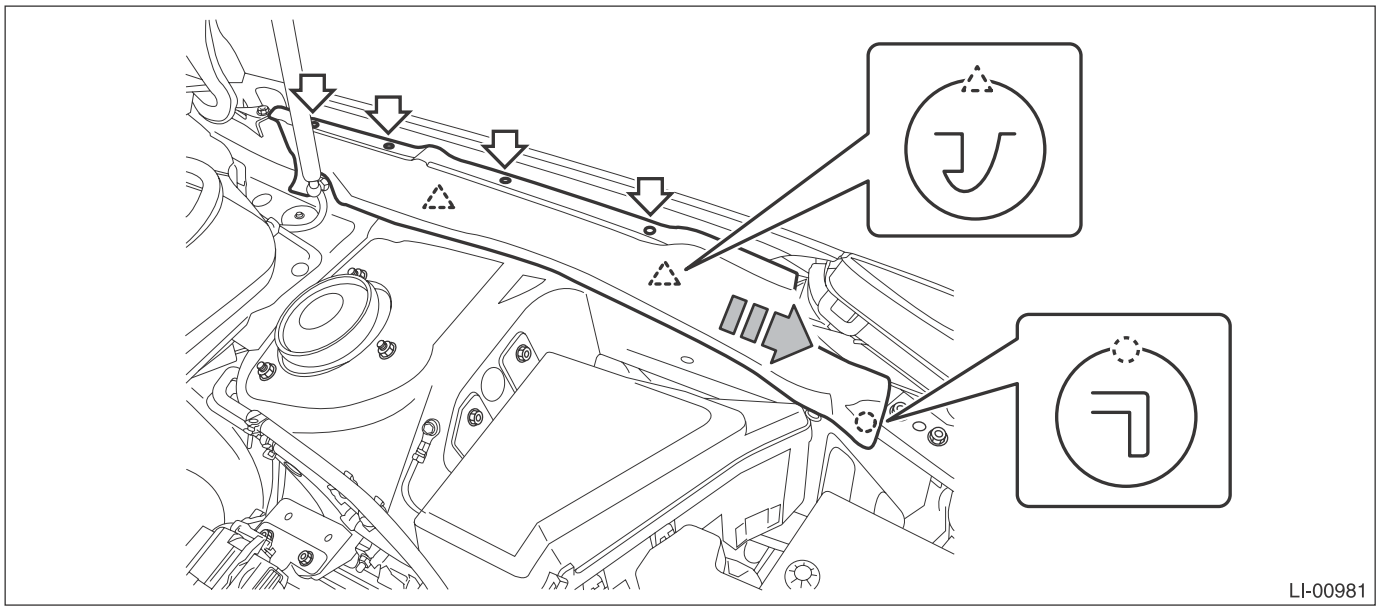

(2) Remove the headlight assembly.

NOTE:
When removing the RH headlight, remove the air intake duct.

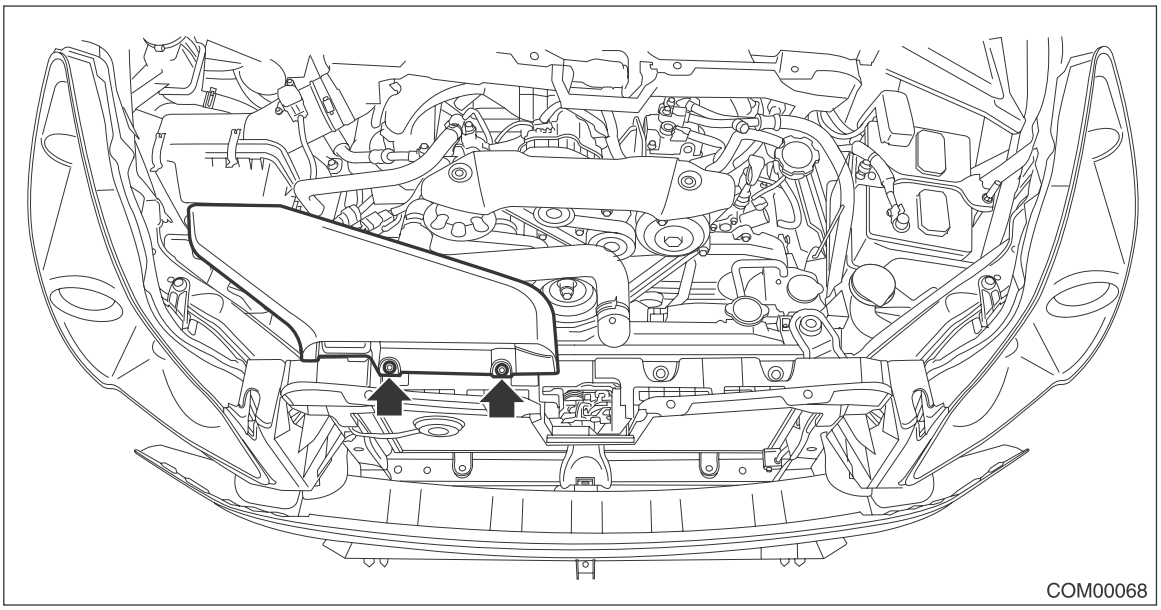

a) Remove the bolts and clips, and pull out the headlight assembly to the front of the vehicle.

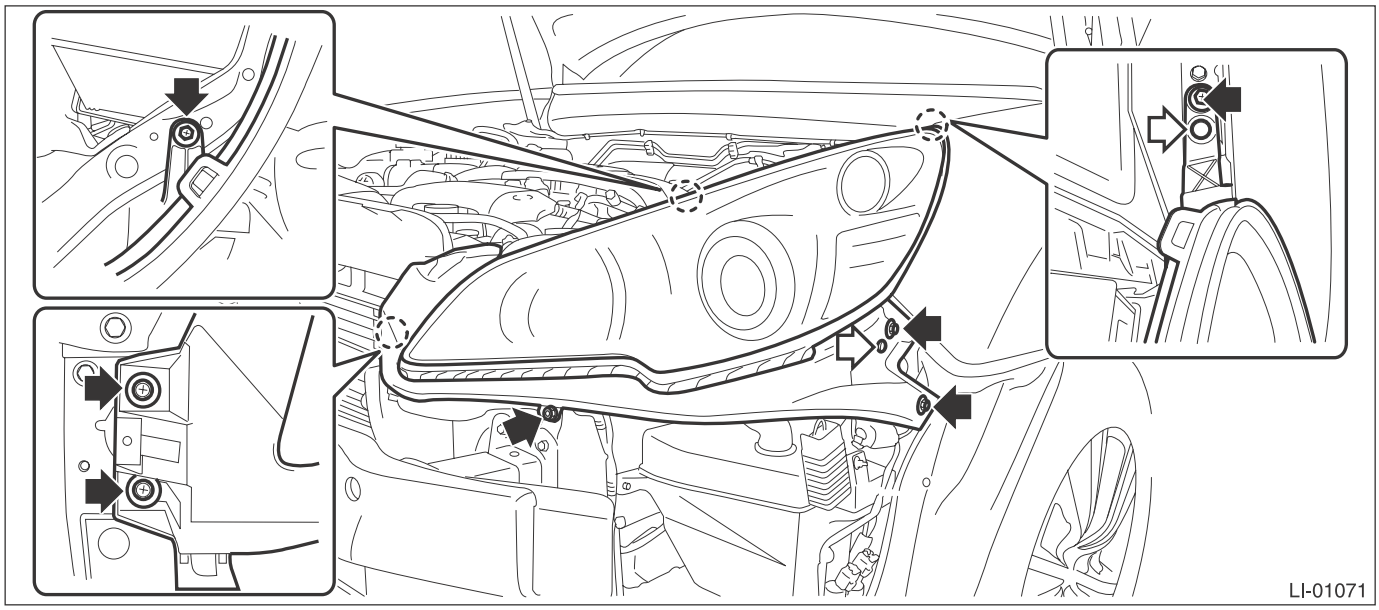

b) Disconnect the connector and remove the headlight assembly.

- RH headlight connector

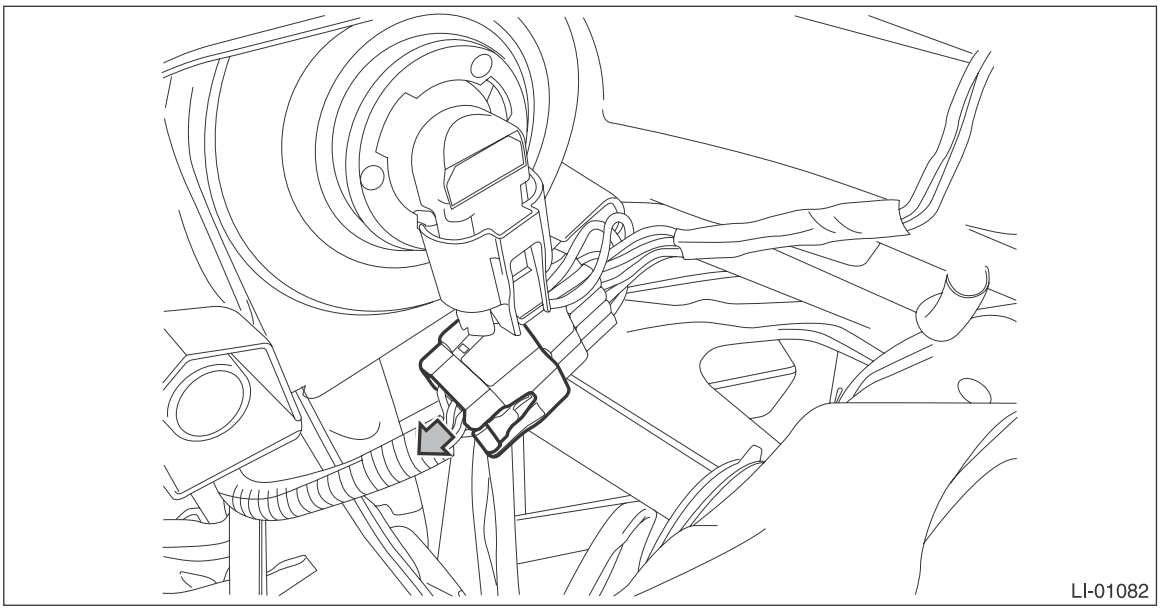

- LH headlight connector

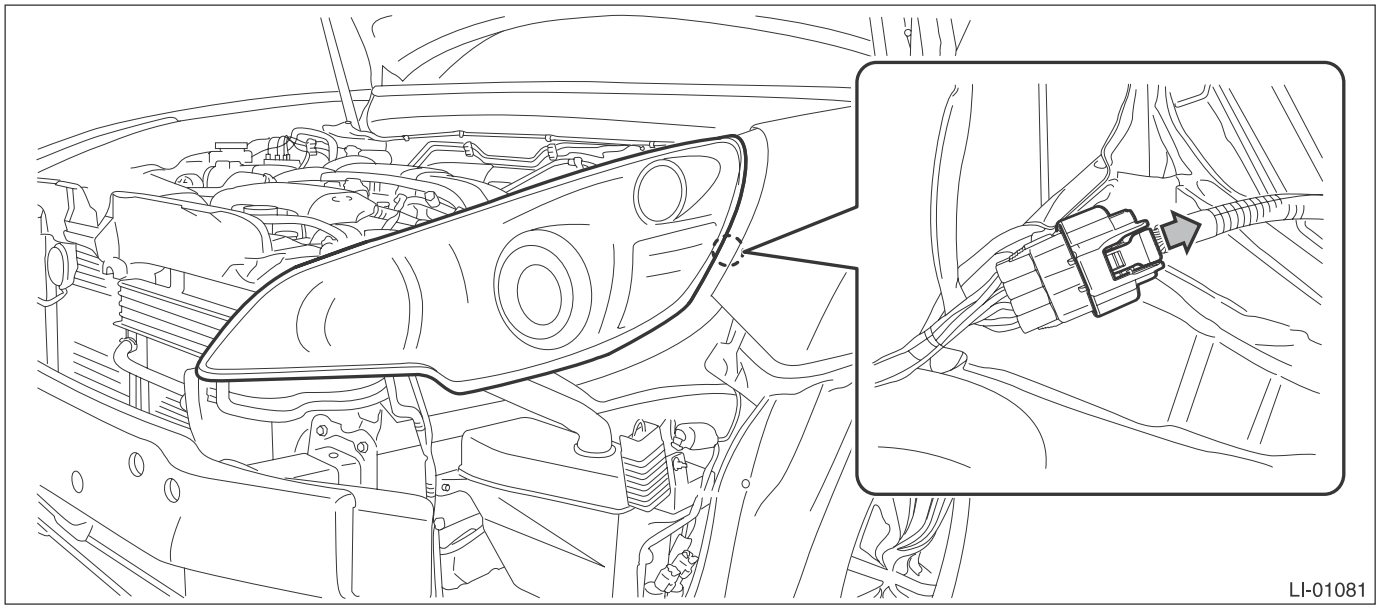

5) Remove the front sub sensor assembly.

(1) Remove the bolt, and remove the sensor cover plate.

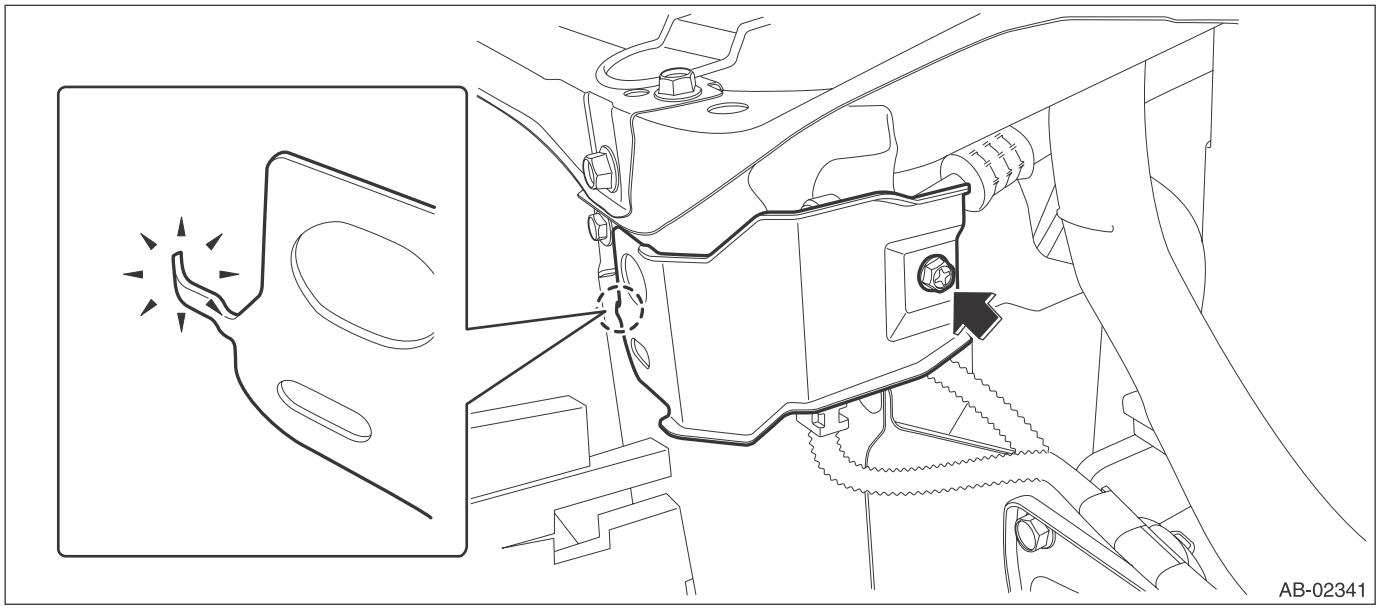

(2) Remove the front sub sensor by removing the bolt and disconnect the connector.

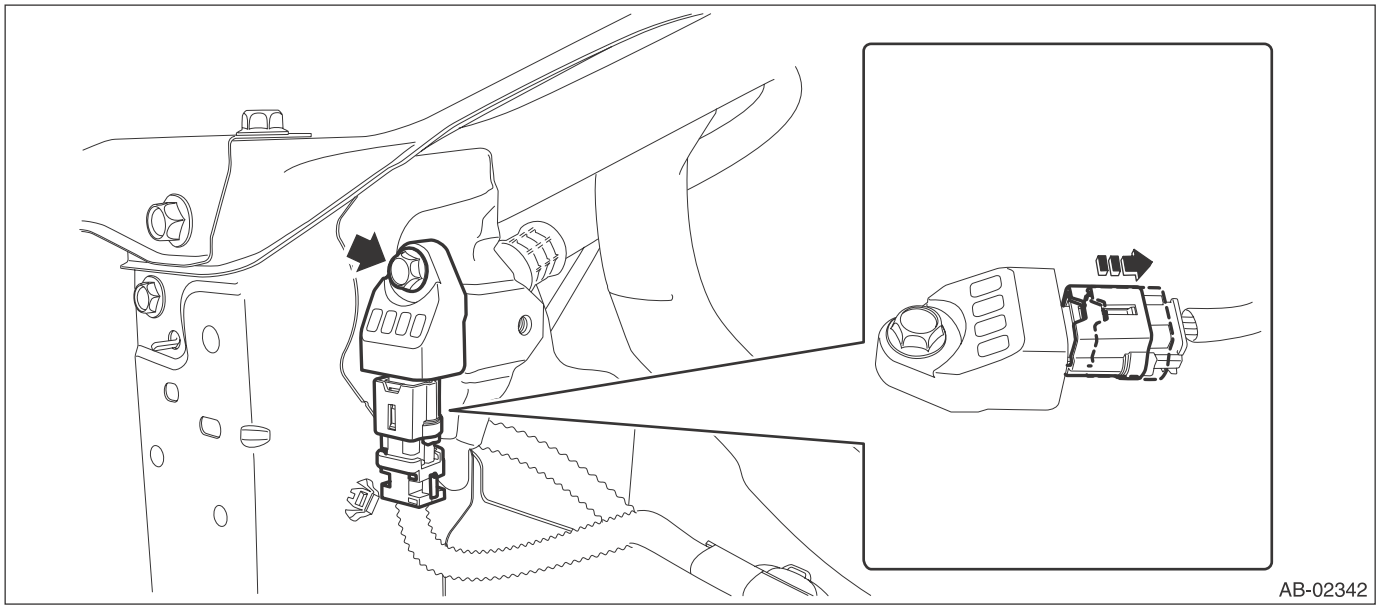

B: INSTALLATION

CAUTION:
- **If the airbag has been activated, replace the front sub sensor assembly with a new part.**
- **Do not reuse the bolt and nut.**

Always use new bolts and nuts for them.
- **When installing the sensor, securely insert the arrest pin on the back side of sensor into the mounting hole on the body.**
- **After installing the headlight assembly, be sure to perform headlight beam adjustment.**

1) Before installation, inspect the following items and replace any faulty part with a new one.
- Front sub sensor damage
- Connector damage
- Sensor cover plate deformation or damage

2) Install each part in the reverse order of removal.

CAUTION:
Install the bumper face so that the under cover front end (b) comes inside the front bumper face (a).

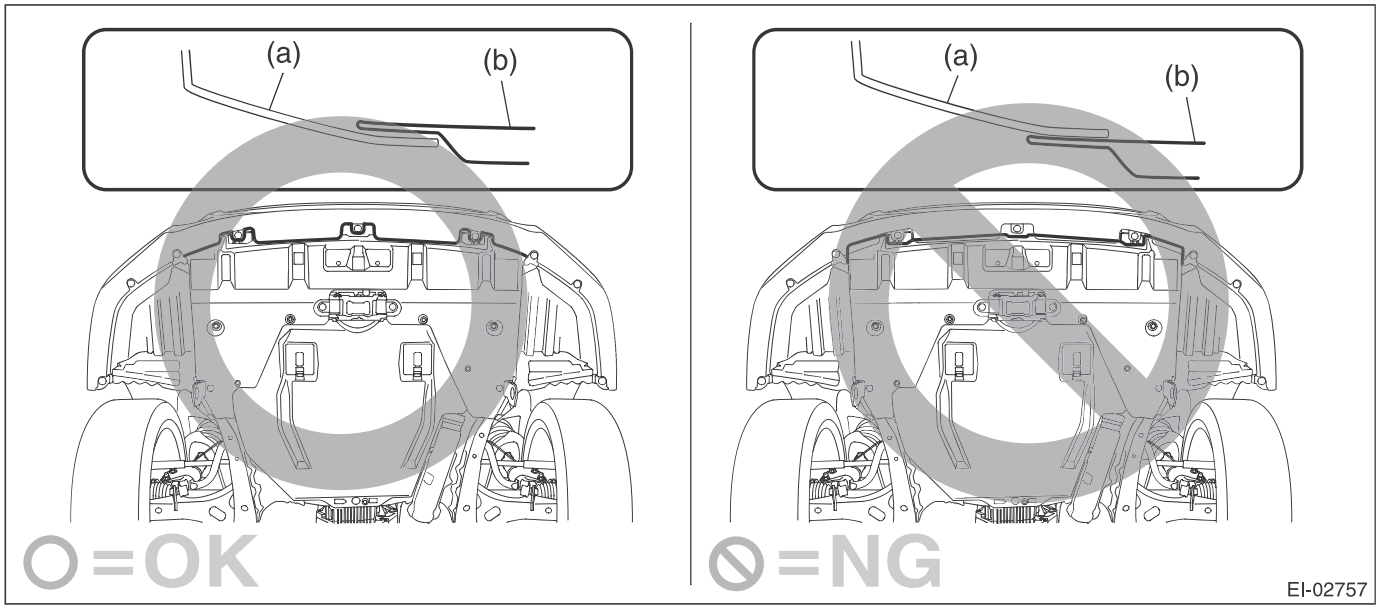

Tightening torque:
Front sub sensor: 13 N·m (1.33 kgf-m, 9.6 ft-lb)
Headlight assembly: 7.5 N·m (0.76 kgf-m, 5.5 ft-lb)

10.Side Airbag Sensor

A: REMOVAL

1) Move the seat all the way forward, from which the airbag sensor is to be removed.

NOTE:
To remove the seat belt retractor assembly,
2) Turn the ignition switch to OFF.
3) Disconnect the ground cable from battery and wait for at least 60 seconds before starting work.
4) Release the claws, and then remove the side sill cover-front INN. (On the side where airbag sensor is removed)

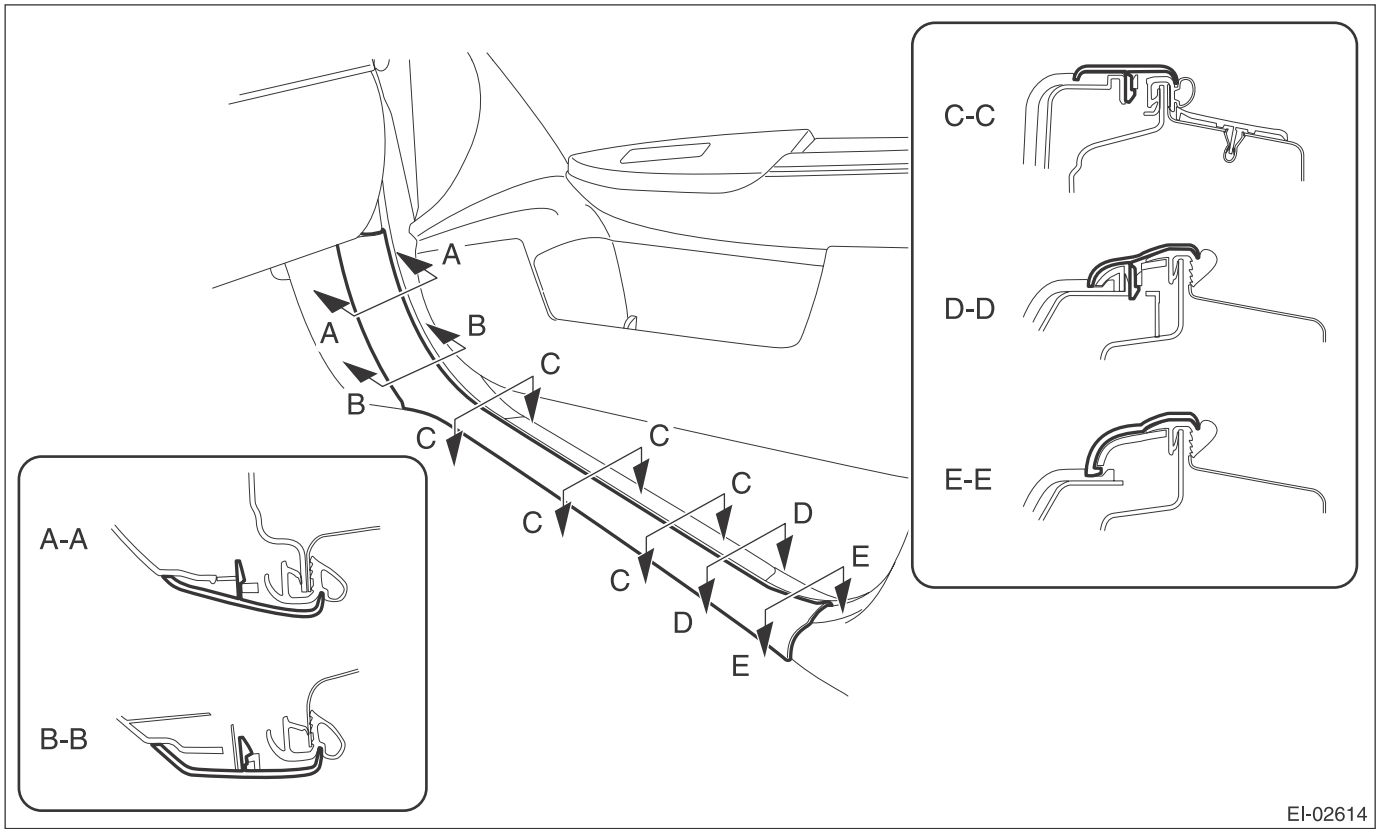

CAUTION:
Do not pull with excessive force. Doing so may damage the claws of the side sill cover INN.

NOTE:
To release the claws of the side sill cover INN, the following steps are recommended.
1. Take out the weather strip from under the side sill cover INN.
2. Turn over the floor mat and release the claw (C) by accessing from behind the side sill cover INN.

5) Remove the rear seat cushion assembly.
(1) Pull up the seat cushion and release the hook.

CAUTION:
If the hook is removed from vehicle body, replace the hook with the new part to avoid the deterioration of seat securing.

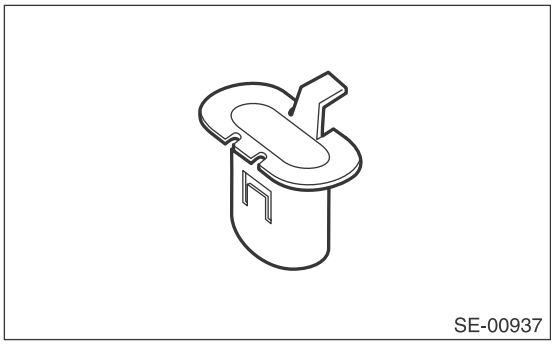
SE-00937

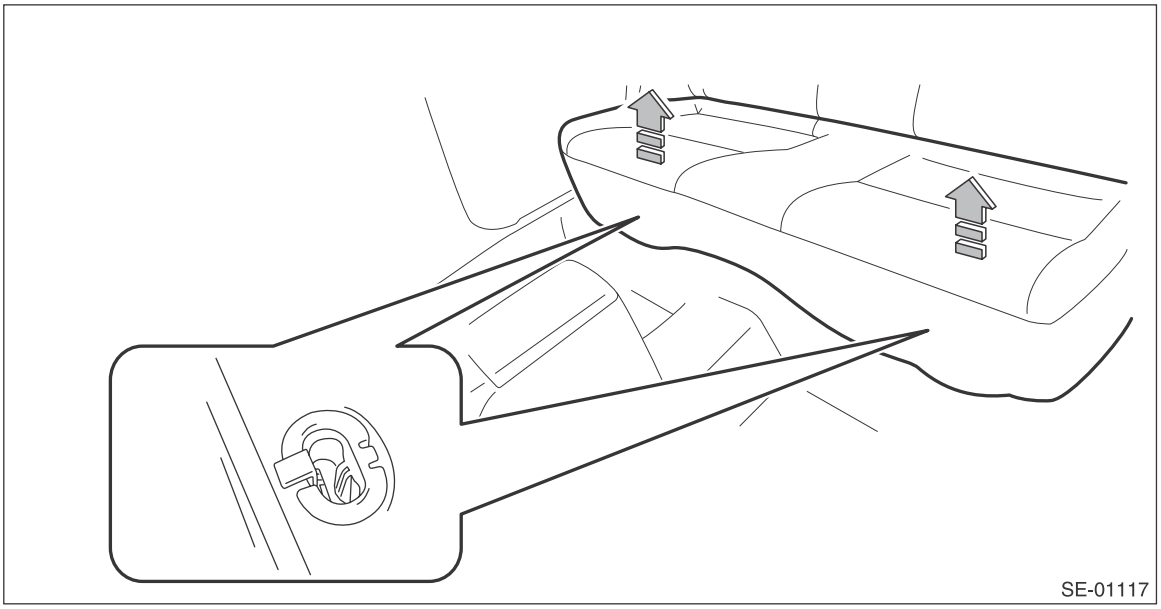
SE-01117

(2) Remove the hook (A) by pushing it back while lifting the front side of the seat cushion, and remove the seat cushion assembly.

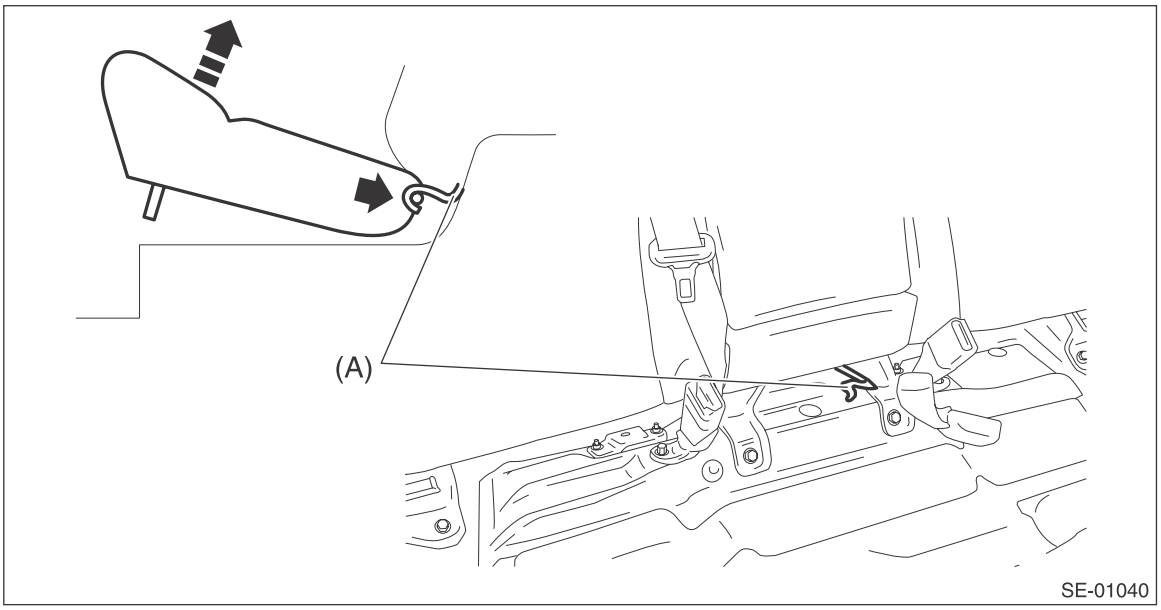

SE-01040

6) Release the clips and claws, and then remove the side sill cover - rear INN. (On the side where airbag sensor is removed)

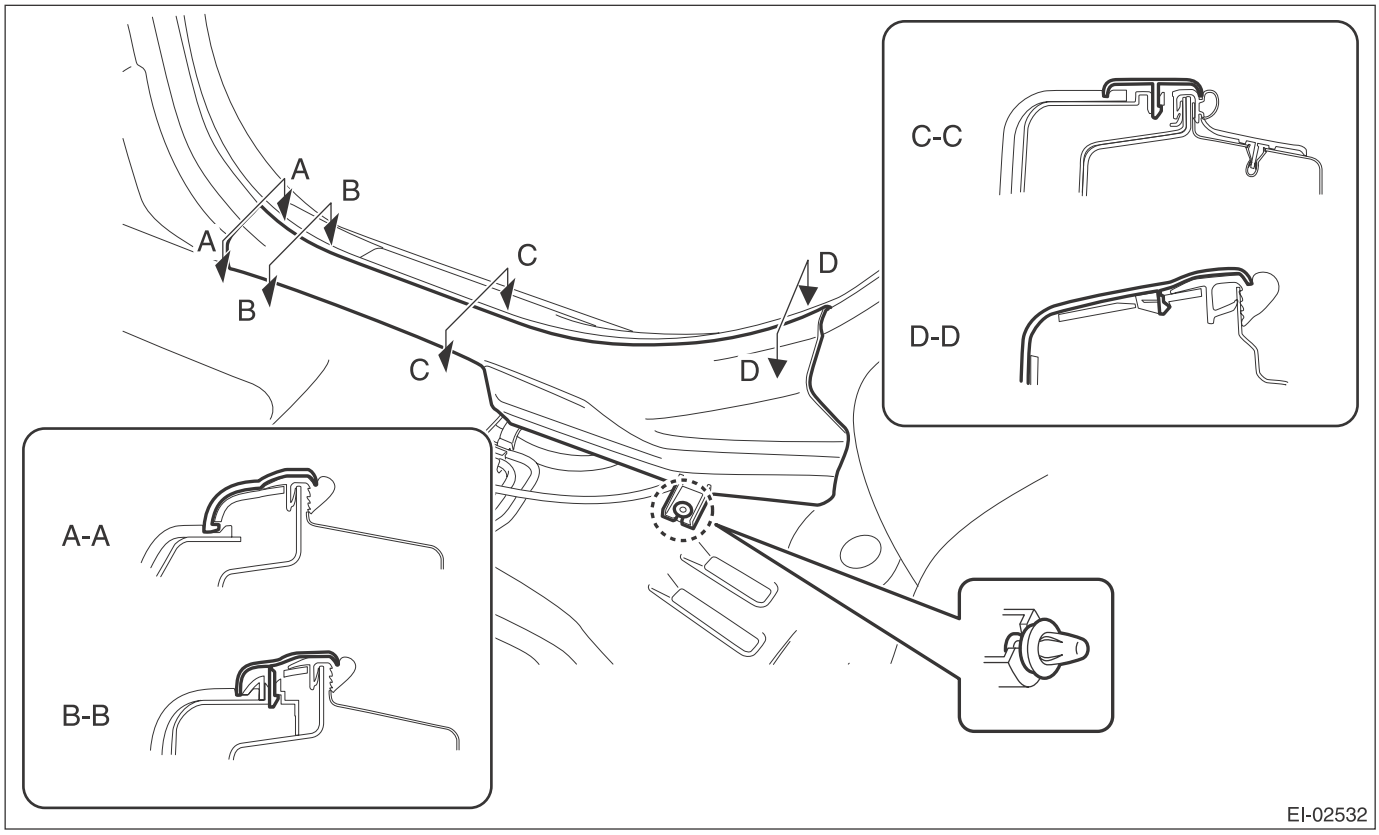

CAUTION:
Do not pull with excessive force. Doing so may damage the claws of the side sill cover INN.

NOTE:
To release the claws of the side sill cover INN, the following steps are recommended.
1. Take out the weather strip from under the side sill cover INN.
2. Turn over the floor mat and release the claws (C) and (D) by accessing from behind the side sill cover INN.

7) Remove the center pillar trim LWR. (On the side where airbag sensor is removed)
(1) Release the clip by pulling the center pillar trim LWR toward you.
(2) Expand the claws of center pillar trim LWR outward and remove it from the center pillar trim UPR.

CAUTION:
Do not expand the center pillar trim LWR excessively. Doing so may damage the trim.

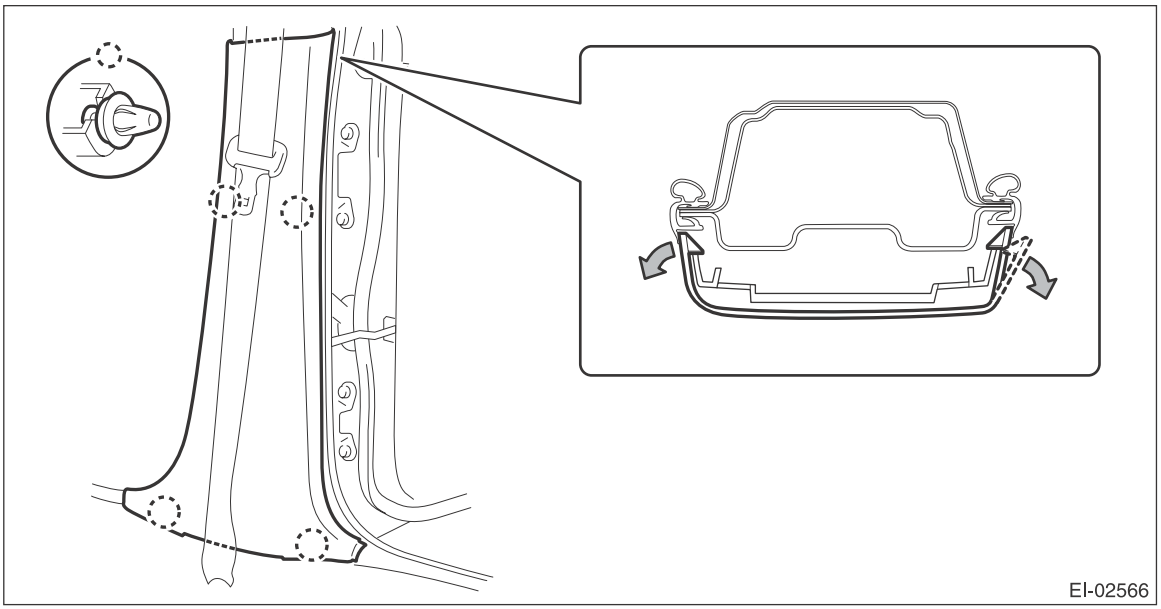
EI-02566

NOTE:
First release the claw located to the rear of the vehicle.
8) Remove the seat belt retractor. (On the side where airbag sensor is removed)
(1) Turn over the floor mat to disconnect the belt tension sensor connector.
(2) Remove the bolt to remove the seat belt retractor.

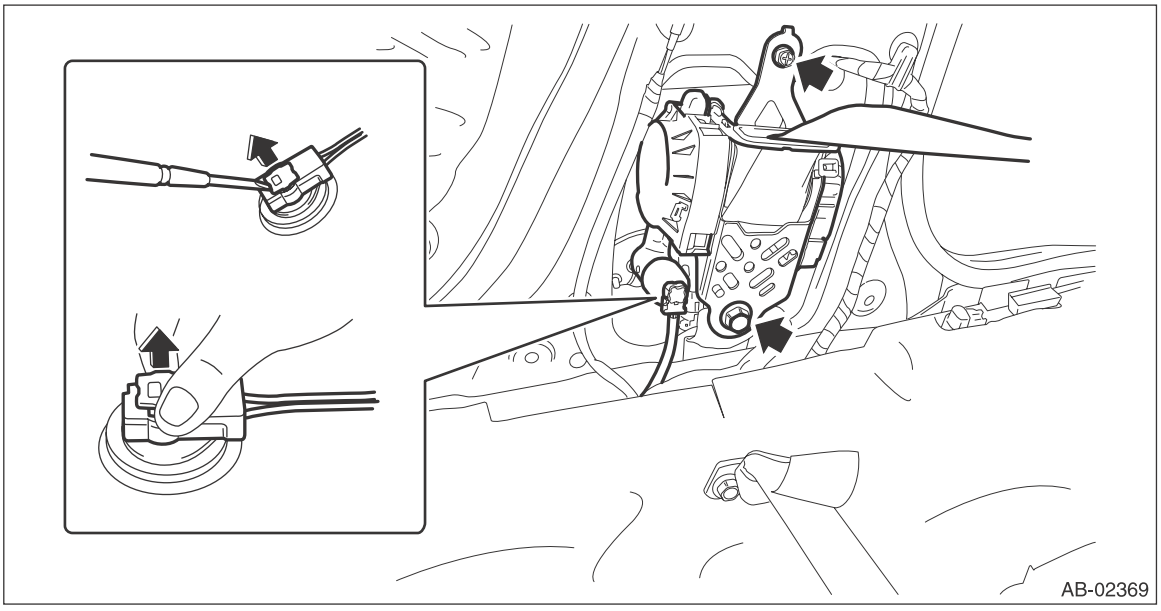
AB-02369

9) Remove the side airbag sensor assembly.

CAUTION:
- **Do not separate the side airbag sensor and bracket. It causes the airbag system malfunction.**
- **Always replace the new parts when removed the sensors from the bracket.**

(1) Remove the nuts.

(2) Disconnect the airbag connector and remove the side airbag sensor assembly.

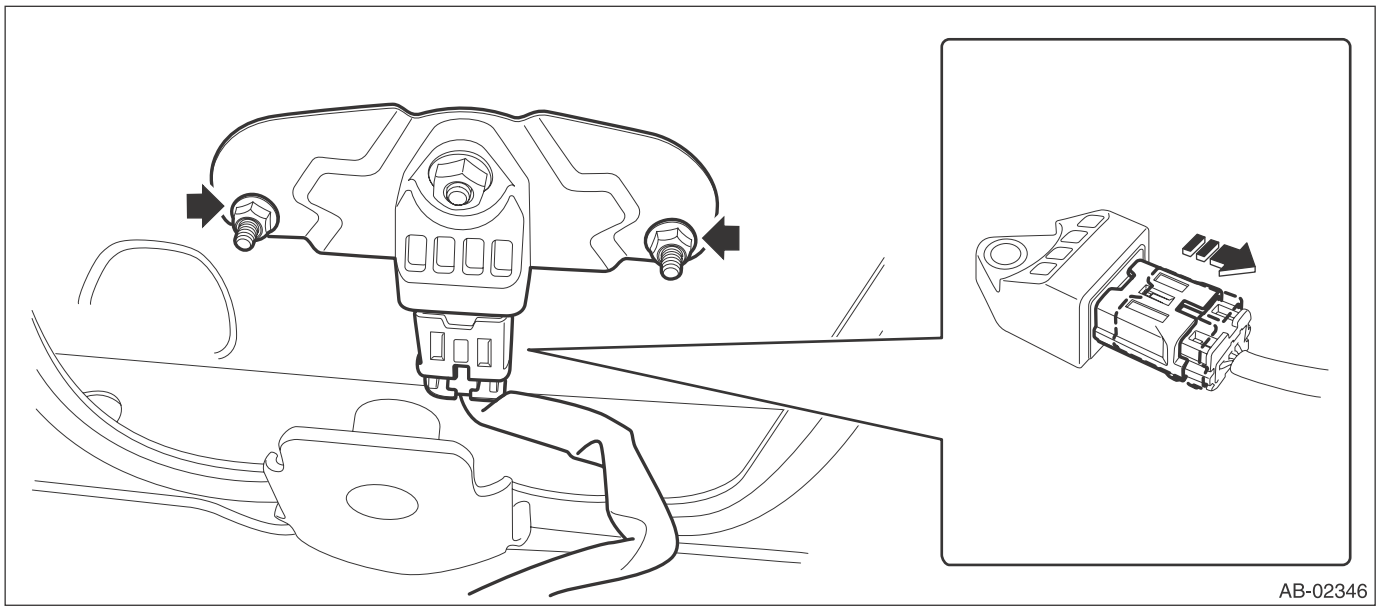

B: INSTALLATION

CAUTION:
Do not reuse the bolt and nut.
Always use new bolts and nuts for them.

1) Before installation, inspect the following items and replace any faulty part with a new one.
- The side airbag sensor, sensor bracket, or connector are damaged.
- Side airbag is deployed.

Tightening torque:
Side airbag sensor: 7.5 N·m (0.76 kgf-m, 5.5 ft-lb)

2) Install each part in the reverse order of removal.

CAUTION:
If the hook is removed from vehicle body, replace the hook with the new part to avoid the deterioration of seat securing.

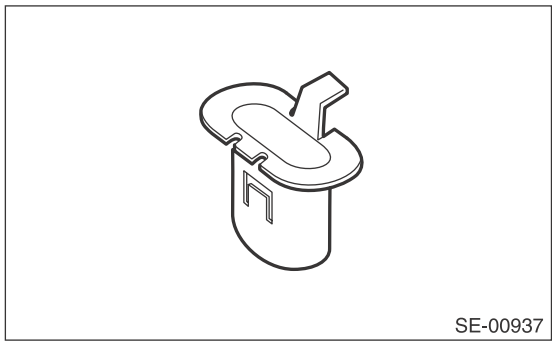

NOTE:
Assemble the center pillar trim LWR to the center pillar trim UPR securely.

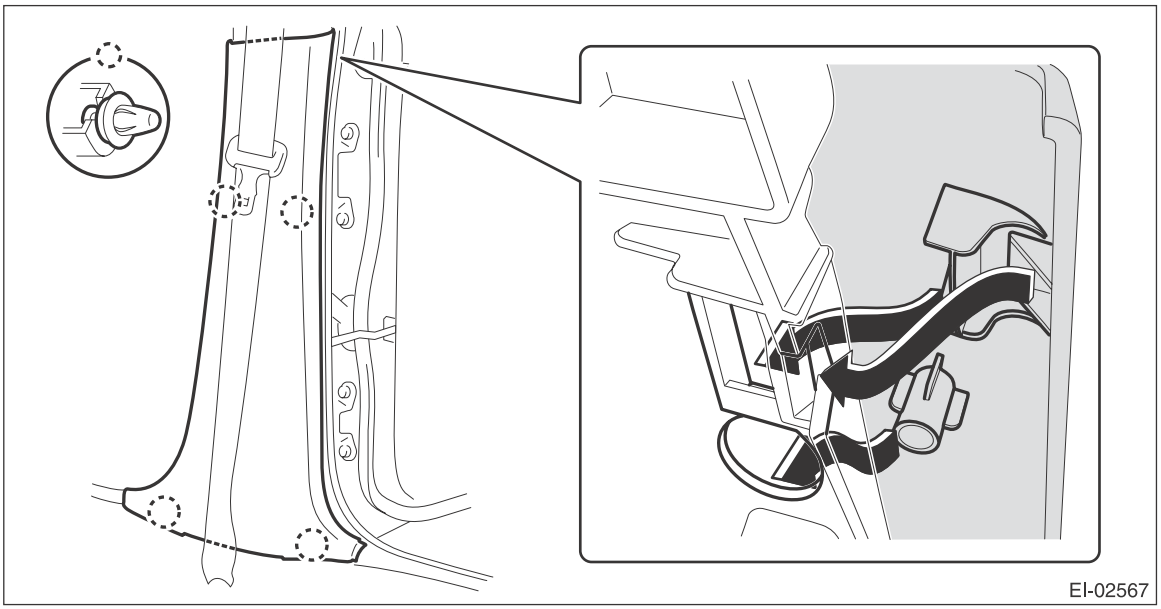

Tightening torque:
Front seat belt: <Ref. to SB-2, FRONT SEAT BELT, COMPONENT, General Description.>

11.Curtain Airbag Sensor

A: REMOVAL

1. SEDAN MODEL

1) Disconnect the ground cable from battery and wait for at least 60 seconds before starting work.

CAUTION:
The airbag system is fitted with a backup power supply. After disconnecting the battery ground cable, the airbag may deploy if you do not wait for 60 seconds before starting the service of airbag system.

2) Remove the rear seat cushion assembly.
   (1) Pull up the seat cushion and release the hook.

CAUTION:
If the hook is removed from vehicle body, replace the hook with the new part to avoid the deterioration of seat securing.

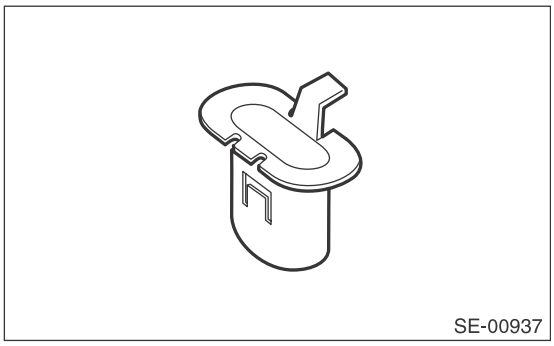
SE-00937

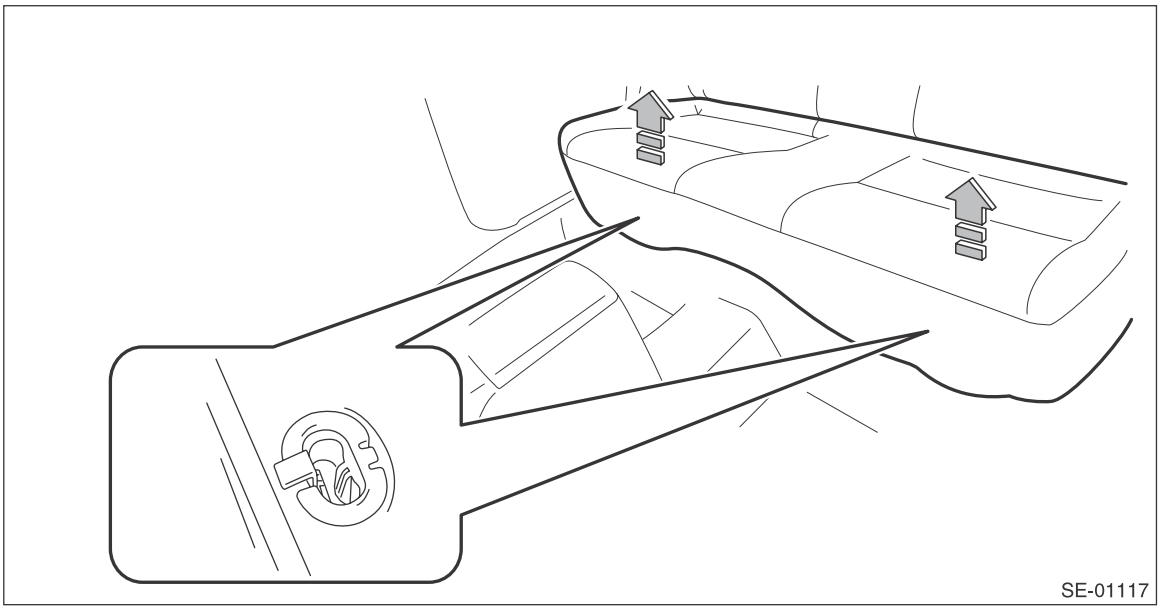
SE-01117

(2) Remove the hook (A) by pushing it back while lifting the front side of the seat cushion, and remove the seat cushion assembly.

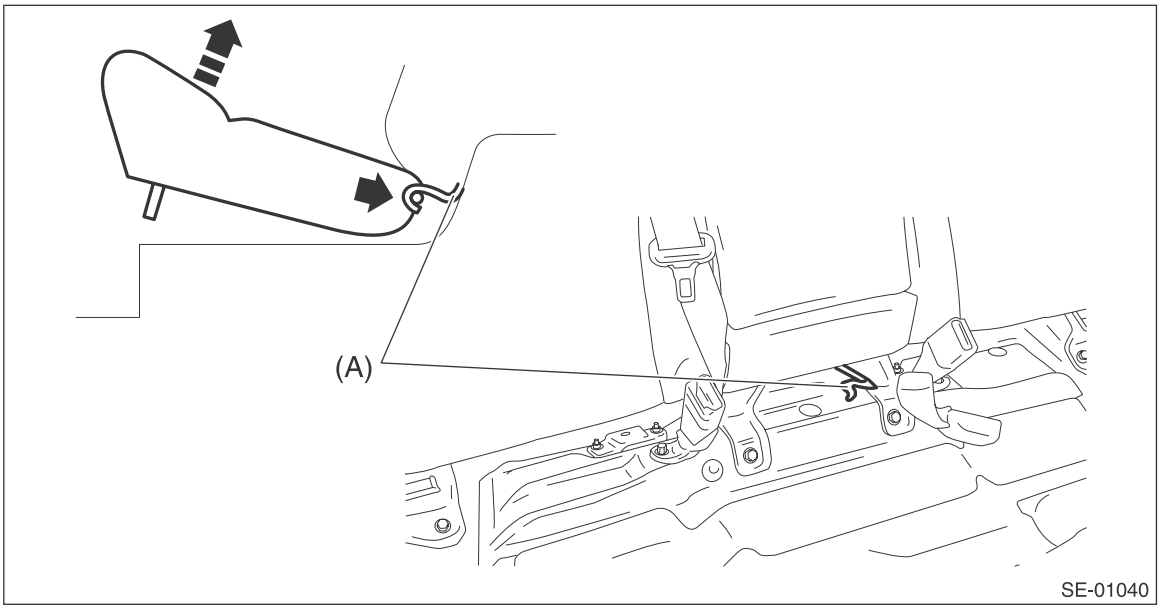

3) Release the clips and claws, and then remove the side sill cover - rear INN. (On the side where airbag sensor is removed)

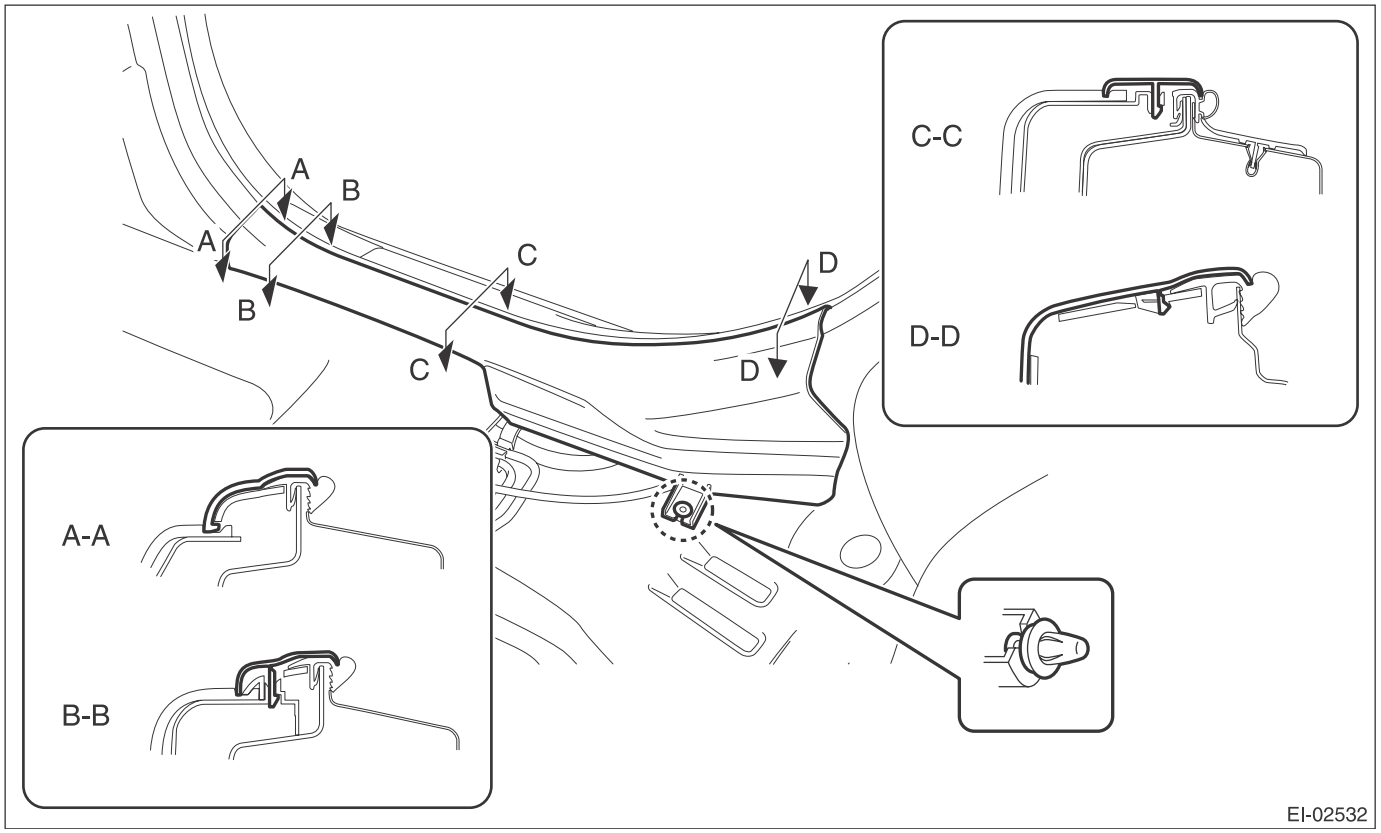

CAUTION:
Do not pull with excessive force. Doing so may damage the claws of the side sill cover INN.

NOTE:
To release the claws of the side sill cover INN, the following steps are recommended.
1. Take out the weather strip from under the side sill cover INN.
2. Turn over the floor mat and release the claws (C) and (D) by accessing from behind the side sill cover INN.

4) Remove the rear quarter trim LWR. (On the side where airbag sensor is removed)

(1) Remove the backrest side pad.
a) Remove the screws.

Preparation tool: Stubby screwdriver

b) Turn over the bottom end of the backrest side pad in the forward direction so that the claws are released.
c) Remove the backrest side pad by pulling it up.

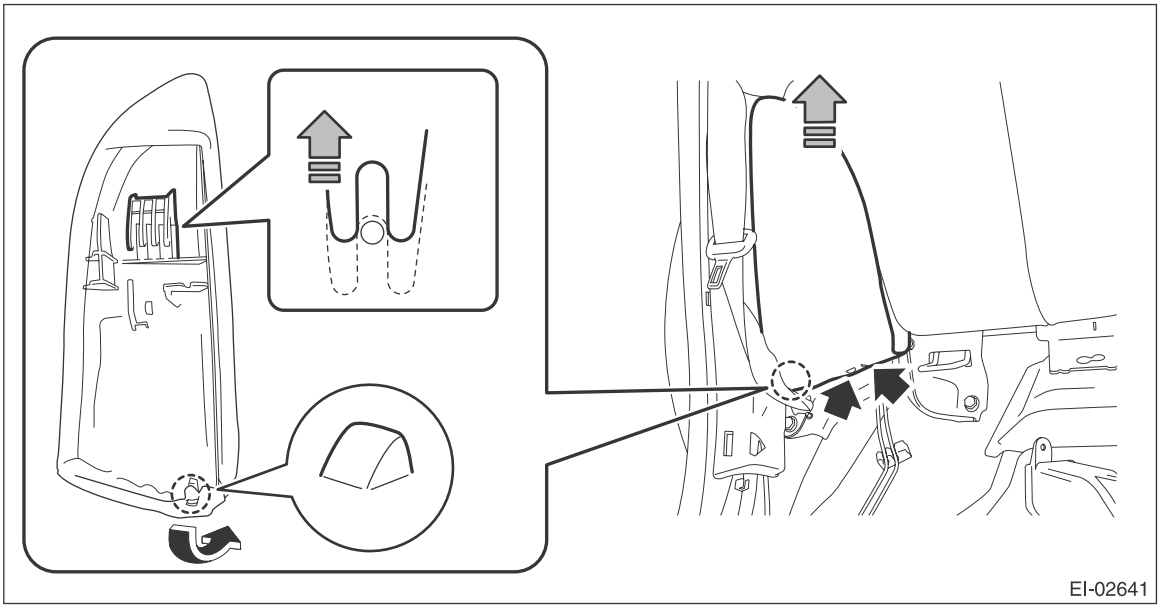

(2) Pull the release lever in the trunk room, and then tilt the backrest forward.

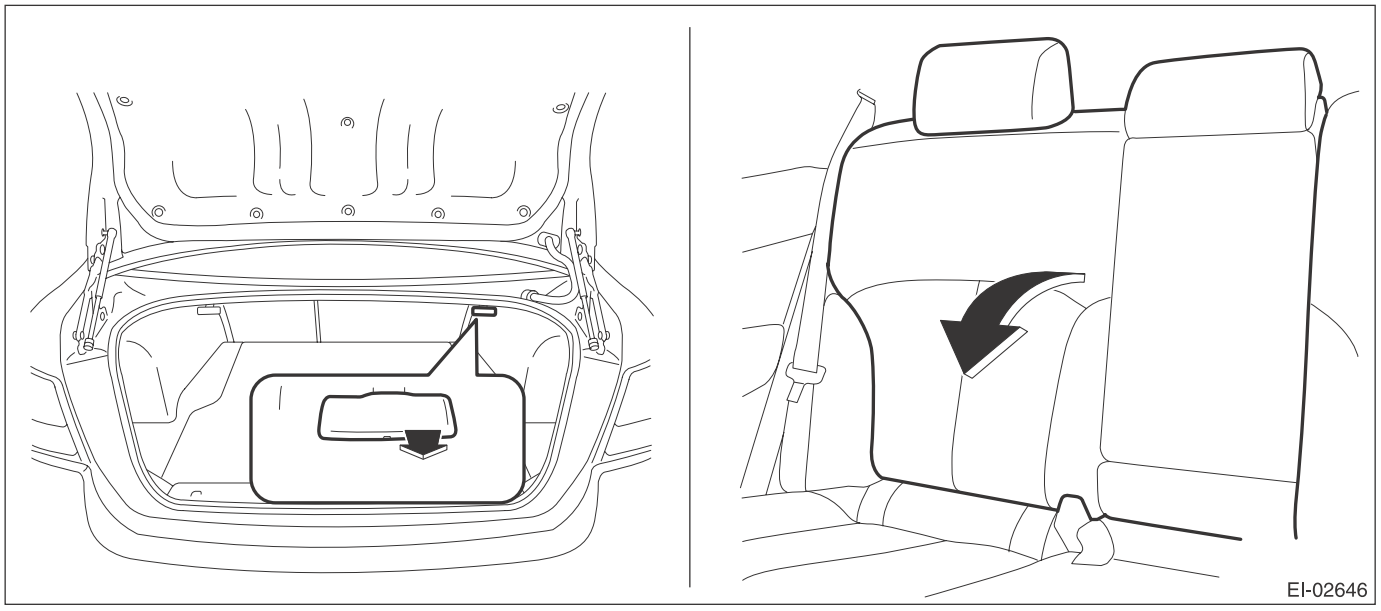

(3) Release the clips of the trunk trim panel assembly-side.

(4) Remove the clips, and remove the rear quarter trim LWR.

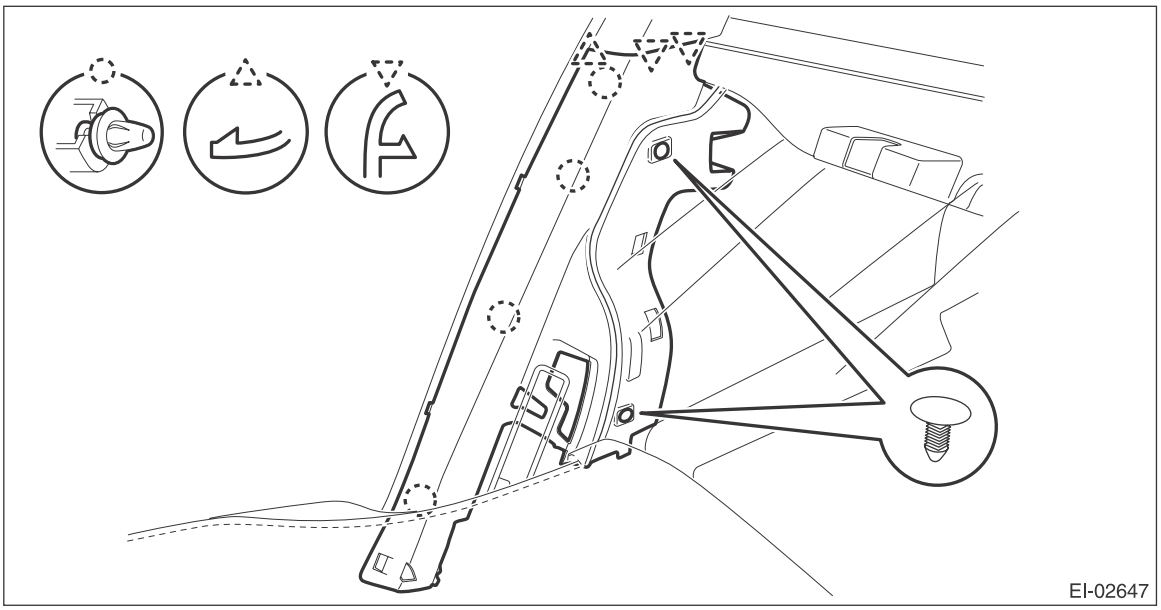

5) Remove the curtain airbag sensor assembly.
(1) Remove the nuts.
(2) Disconnect the airbag connector and remove the curtain airbag sensor assembly.

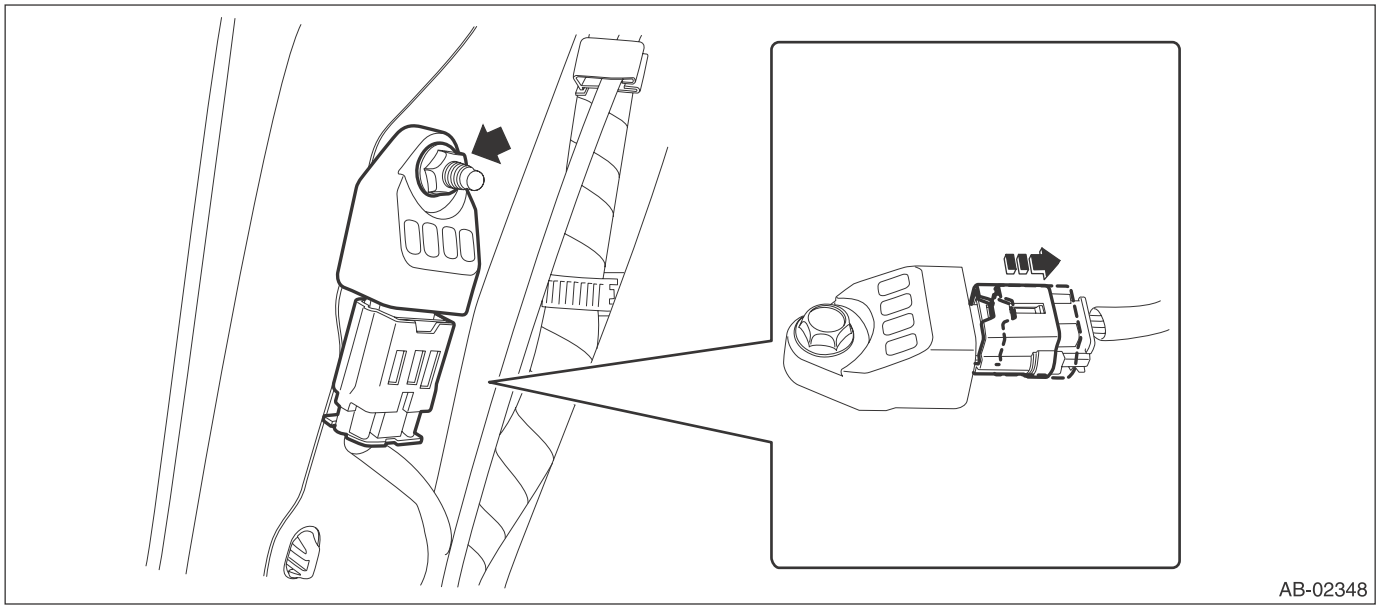

2. OUTBACK MODEL

1) Disconnect the ground cable from battery and wait for at least 60 seconds before starting work.

CAUTION:
The airbag system is fitted with a backup power supply. After disconnecting the battery ground cable, the airbag may deploy if you do not wait for 60 seconds before starting the service of airbag system.

2) Remove the rear seat cushion assembly.
(1) Pull up the seat cushion and release the hook.

CAUTION:
If the hook is removed from vehicle body, replace the hook with the new part to avoid the deterioration of seat securing.

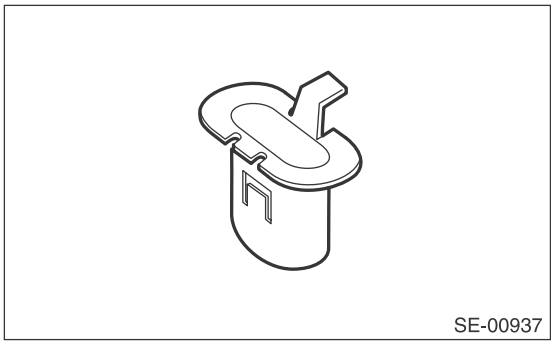
SE-00937

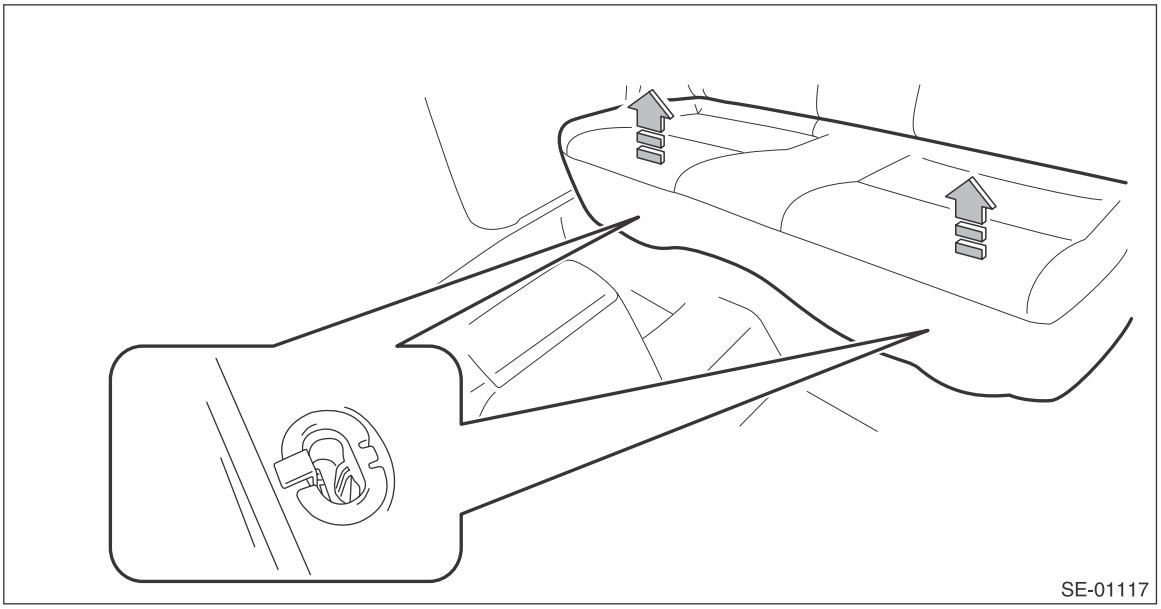
SE-01117

(2) Remove the hook (A) by pushing it back while lifting the front side of the seat cushion, and remove the seat cushion assembly.

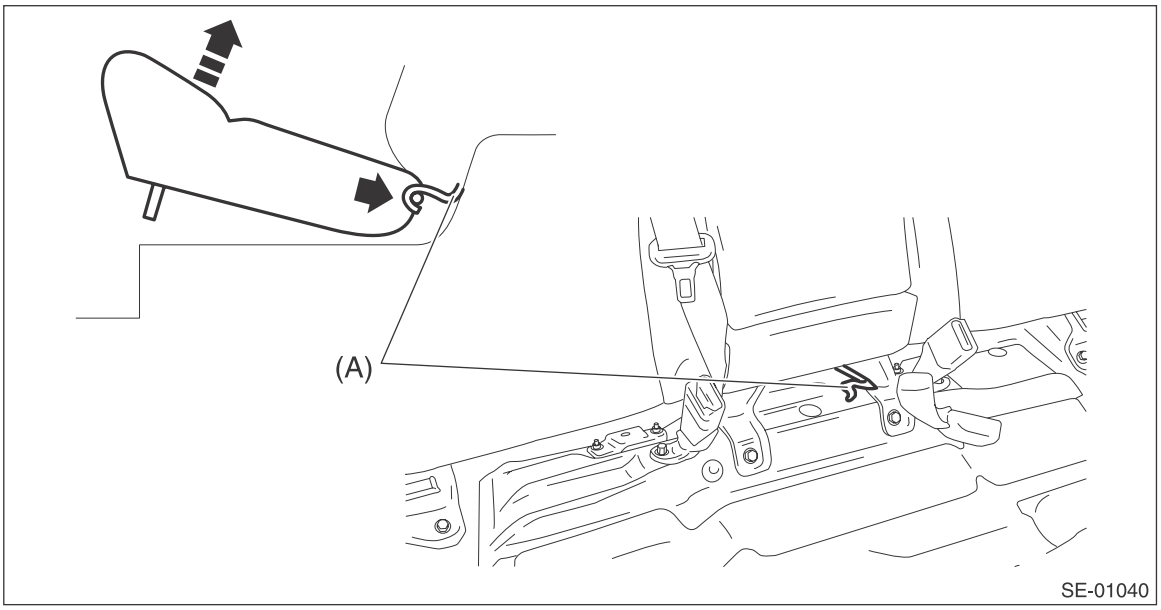

SE-01040

3) Release the clips and claws, and then remove the side sill cover - rear INN. (On the side where airbag sensor is removed)

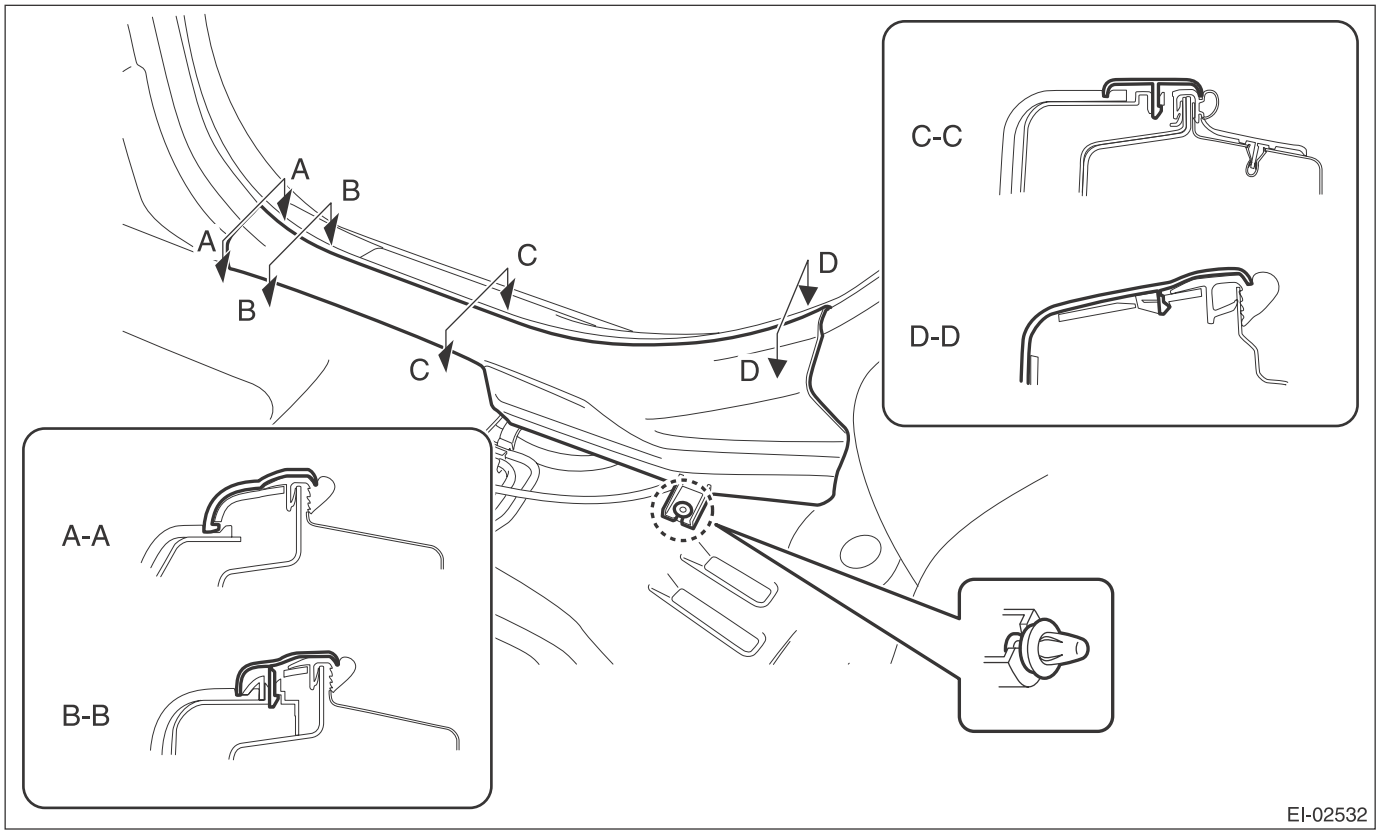

CAUTION:
Do not pull with excessive force. Doing so may damage the claws of the side sill cover INN.

NOTE:
To release the claws of the side sill cover INN, the following steps are recommended.
1. Take out the weather strip from under the side sill cover INN.
2. Turn over the floor mat and release the claws (C) and (D) by accessing from behind the side sill cover INN.

4) Tilt the backrest forward, and then turn over the backrest backside mat.

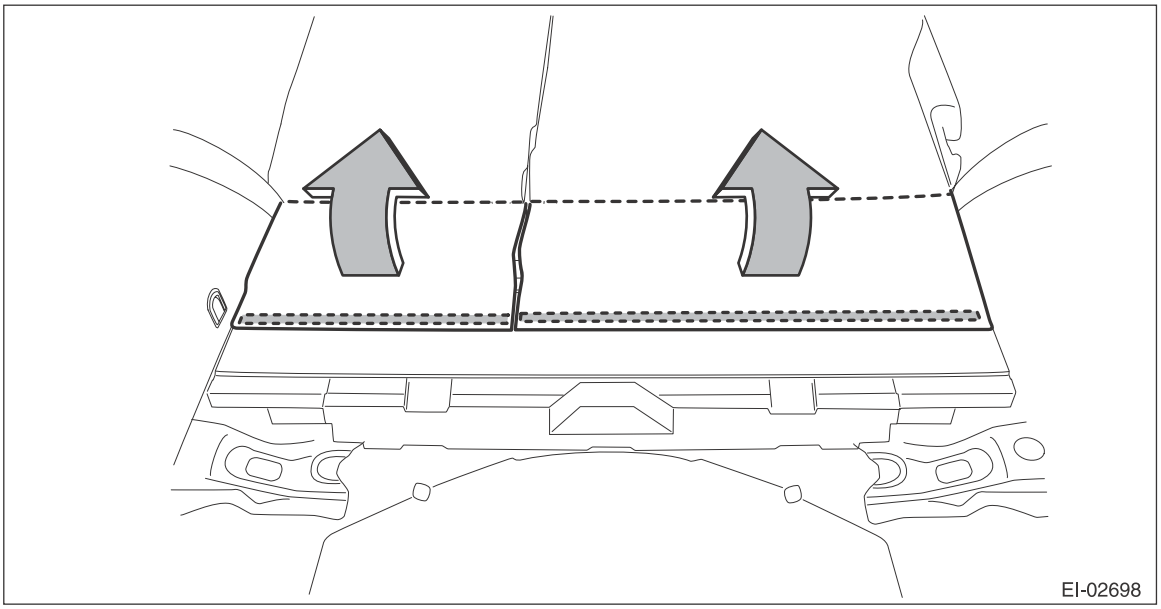

5) Remove the backrest side pad assembly. (On the side where airbag sensor is removed)
(1) Disconnect the backrest cable and reclining lever cable.

(2) Remove the screws and remove the reclining lever assembly by pulling it downward.

Preparation tool: Stubby screwdriver

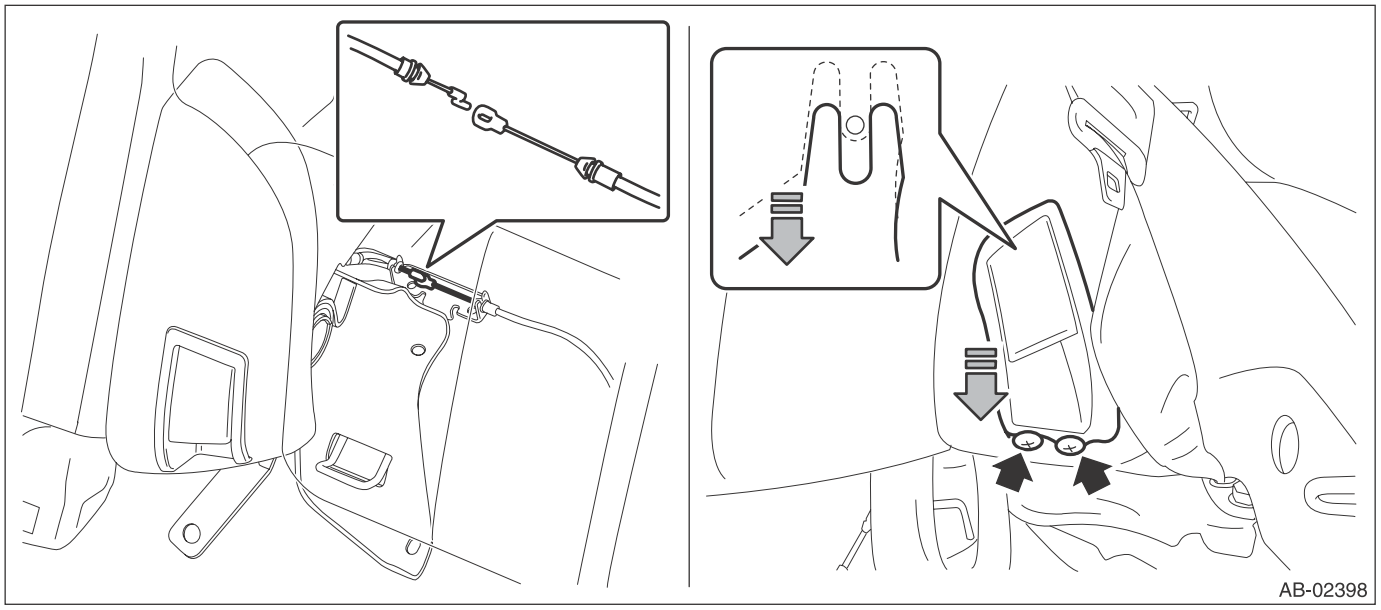

(3) Turn over the bottom end of the backrest side pad in the forward direction so that the claws are released.

(4) Remove the backrest side pad by pulling it up.

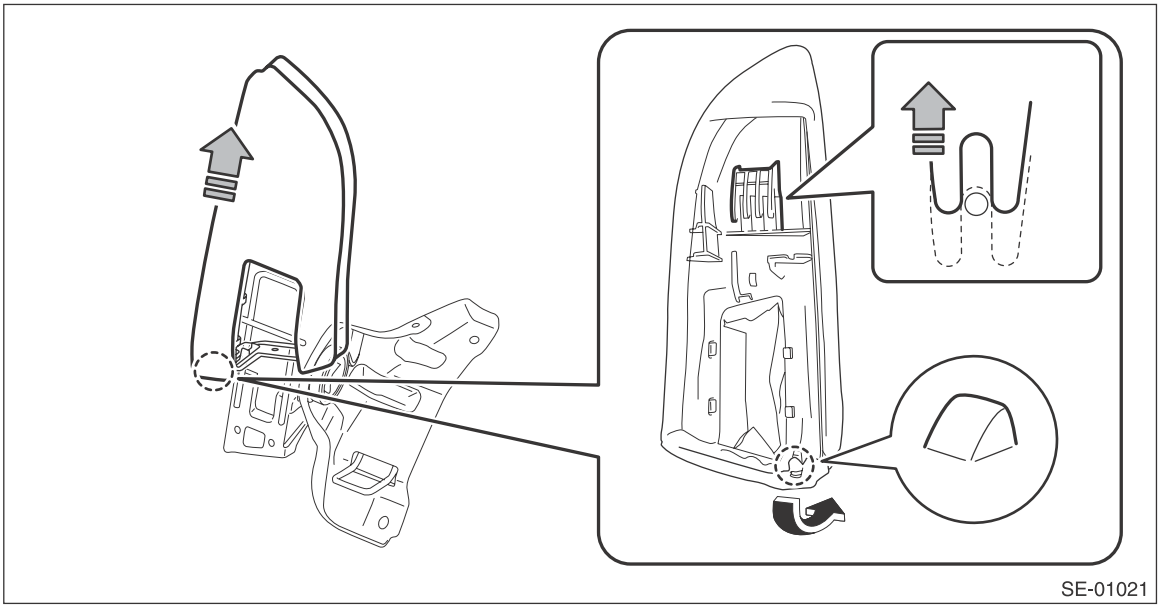

6) Remove the clips, and remove the luggage floor box and rear floor edge cover.

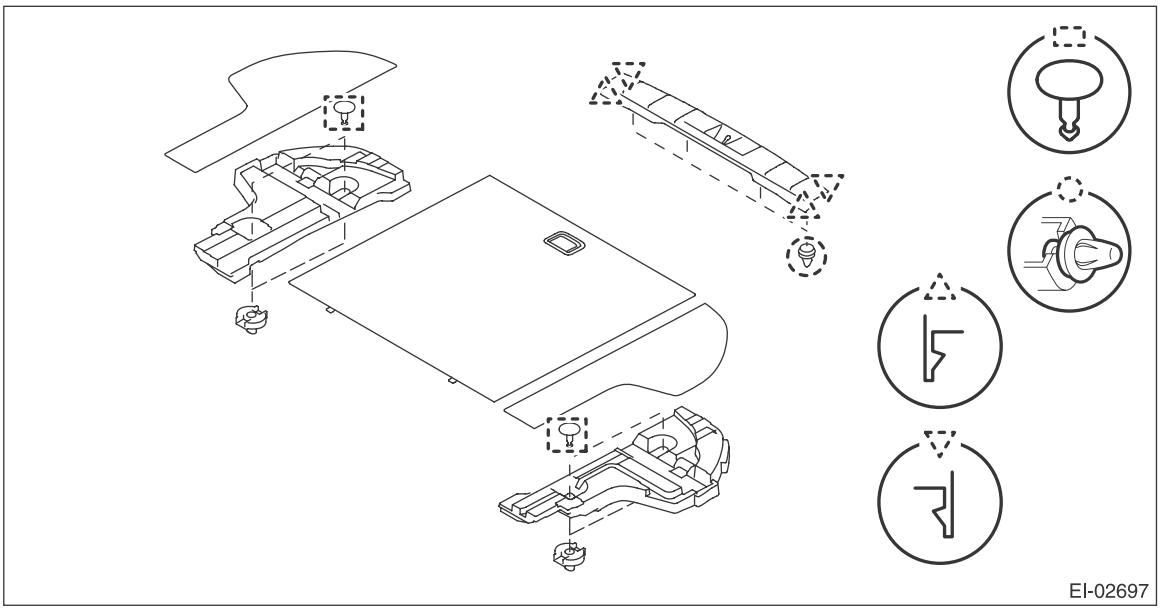

7) Remove the rear quarter trim LWR. (On the side where airbag sensor is removed)
   (1) Remove the caps, screws, and bolts. (A), (C)
   (2) Take out the hook and remove the screw inside. (B)
   (3) Remove the clips, and remove the rear quarter trim LWR.

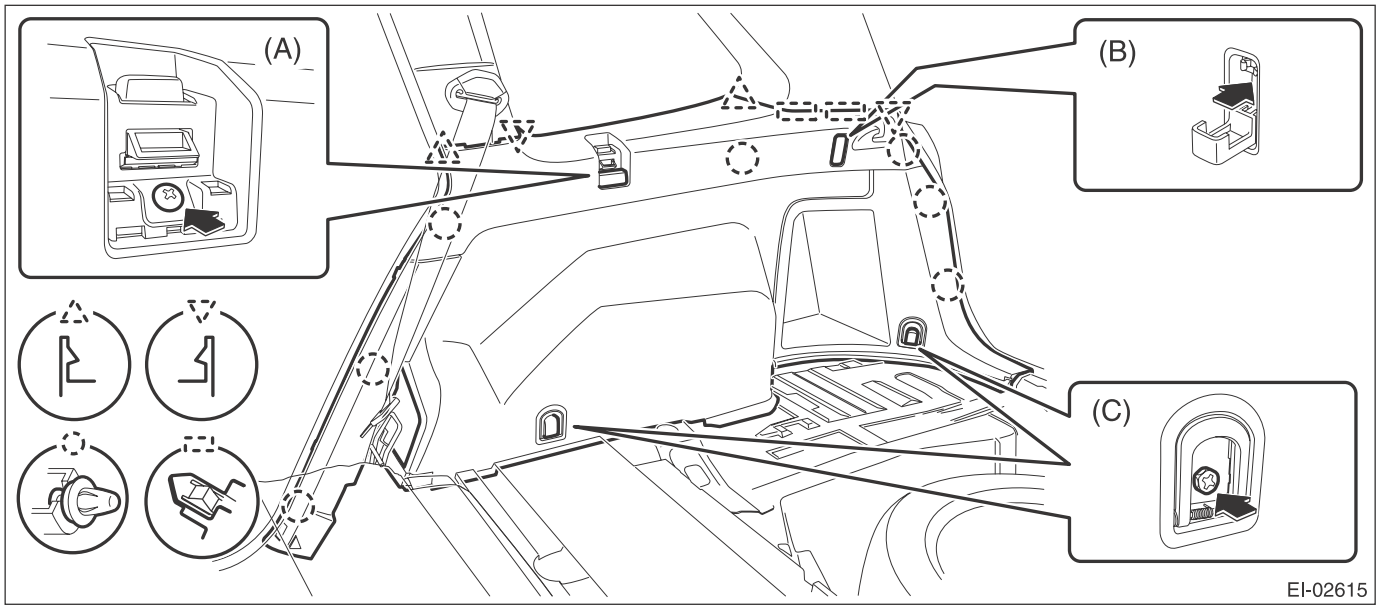

8) Remove the curtain airbag sensor assembly.
   (1) Remove the nuts.

(2) Disconnect the airbag connector and remove the curtain airbag sensor assembly.

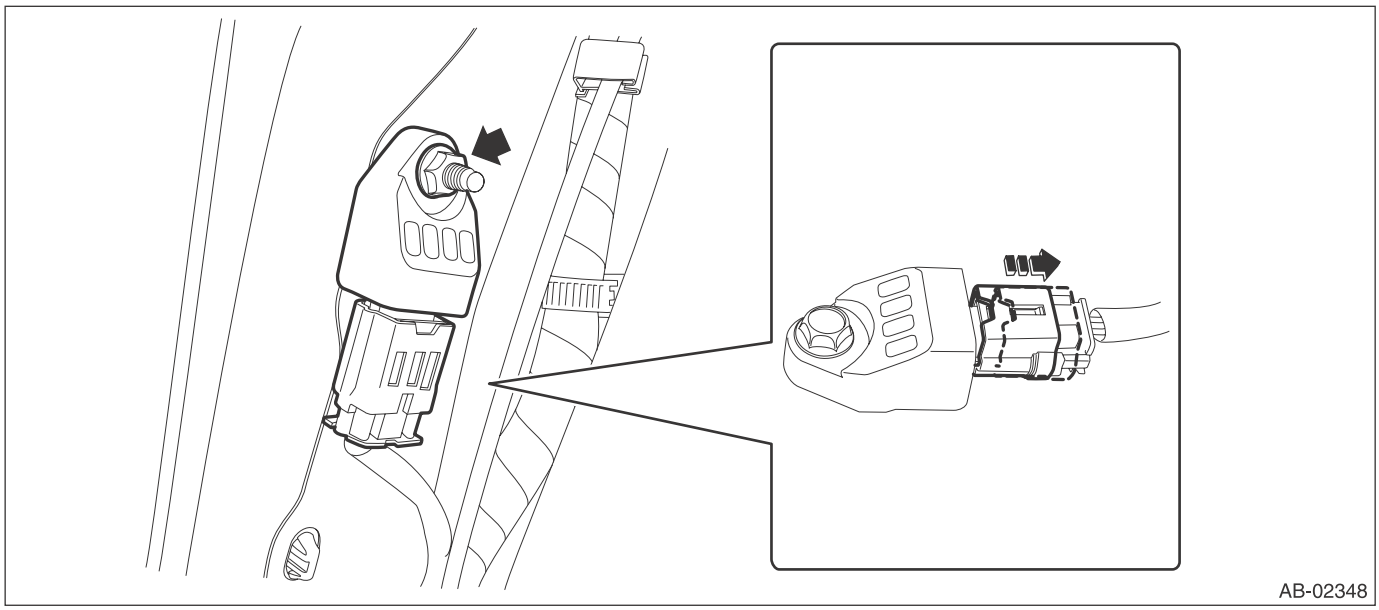

B: INSTALLATION

CAUTION:
• Do not reuse the bolt and nut.
Always use new bolts and nuts for them.
• When installing the sensor, securely insert the arrest pin on the back side of sensor into the mounting hole on the body.
1) Before installation, inspect the following items and replace any faulty part with a new one.
• The curtain airbag sensor or connector are damaged.
• Curtain airbag is deployed.
2) Install each part in the reverse order of removal.

CAUTION:
If the hook is removed from vehicle body, replace the hook with the new part to avoid the deterioration of seat securing.

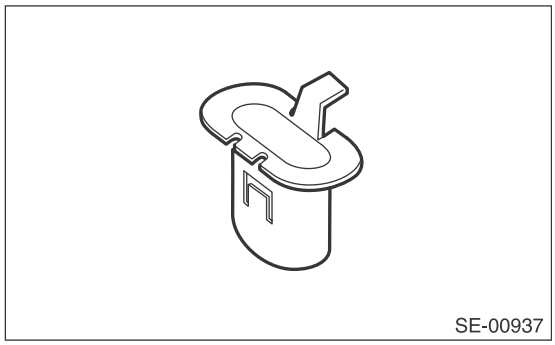

Tightening torque:
Curtain airbag sensor: 7.5 N·m (0.76 kgf-m, 5.5 ft-lb)

12.Roll Connector

A: REMOVAL

1) Position the front wheels straight ahead. (After moving a vehicle 5 m (16 ft) or more with front wheels positioned straight ahead, make sure that the vehicle moves straight ahead.)
2) Turn the ignition switch to OFF.
3) Disconnect the ground cable from battery and wait for at least 60 seconds before starting work.
4) Remove the driver's airbag module assembly.

Preparation tool: TORX® T30

(1) Loosen the TORX® bolts located on the sides of the steering wheel.

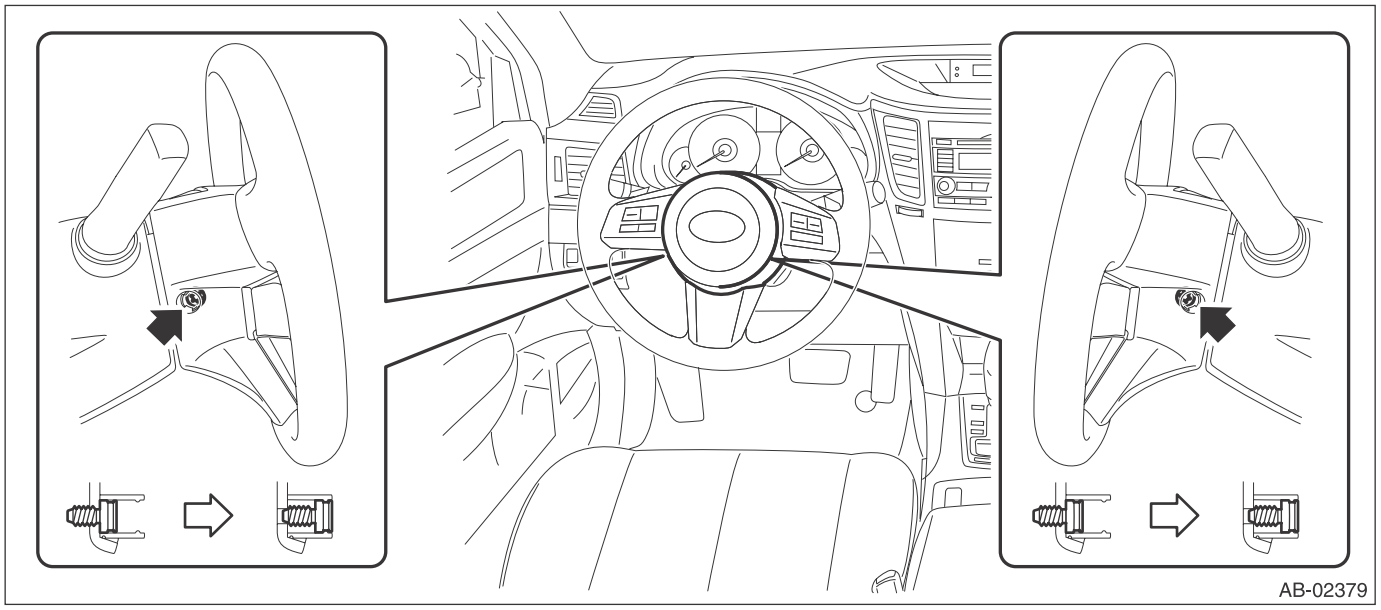

(2) Disconnect the airbag connector and remove the airbag module assembly. <Ref. to AB-18, PROCEDURE, Airbag Connector.>
(3) Disconnect the horn harness.

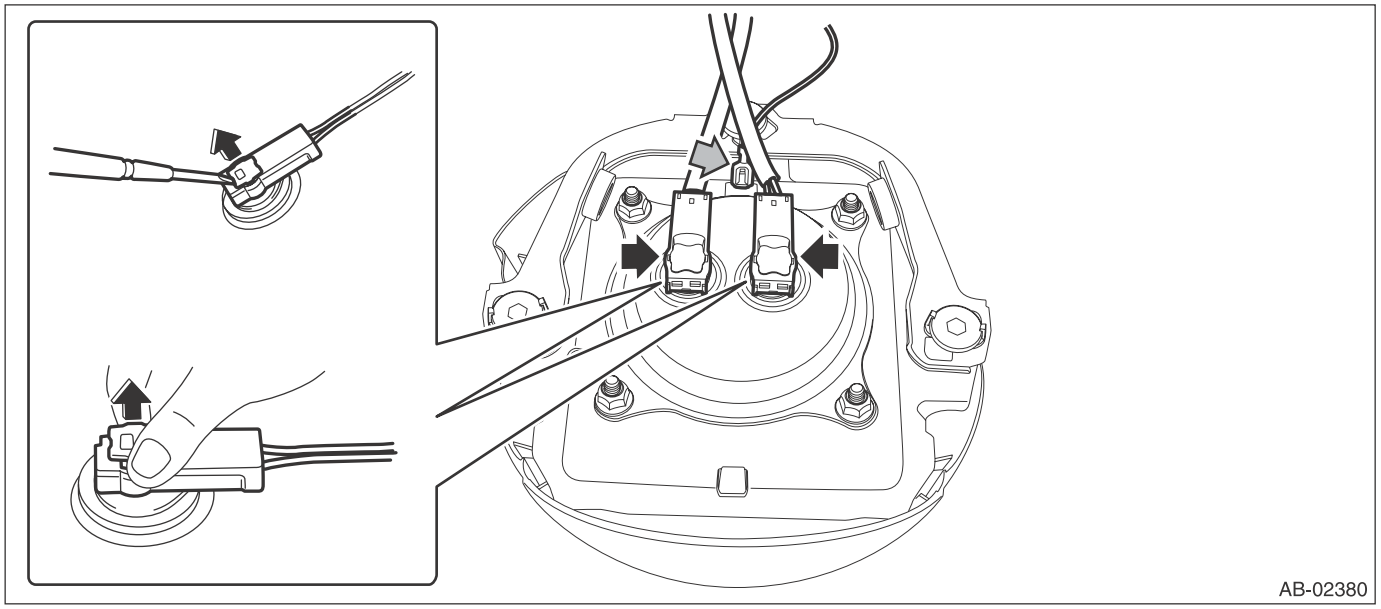

5) Remove the steering wheel.

CAUTION:
- **Always use the steering wheel puller for removal to avoid deforming the steering wheel.**
- **If the steering wheel has been removed, make sure that the roll connector is not turned from the original position.**

(1) Disconnect the connector and remove the nut.
(2) Put alignment marks and remove the steering wheel.

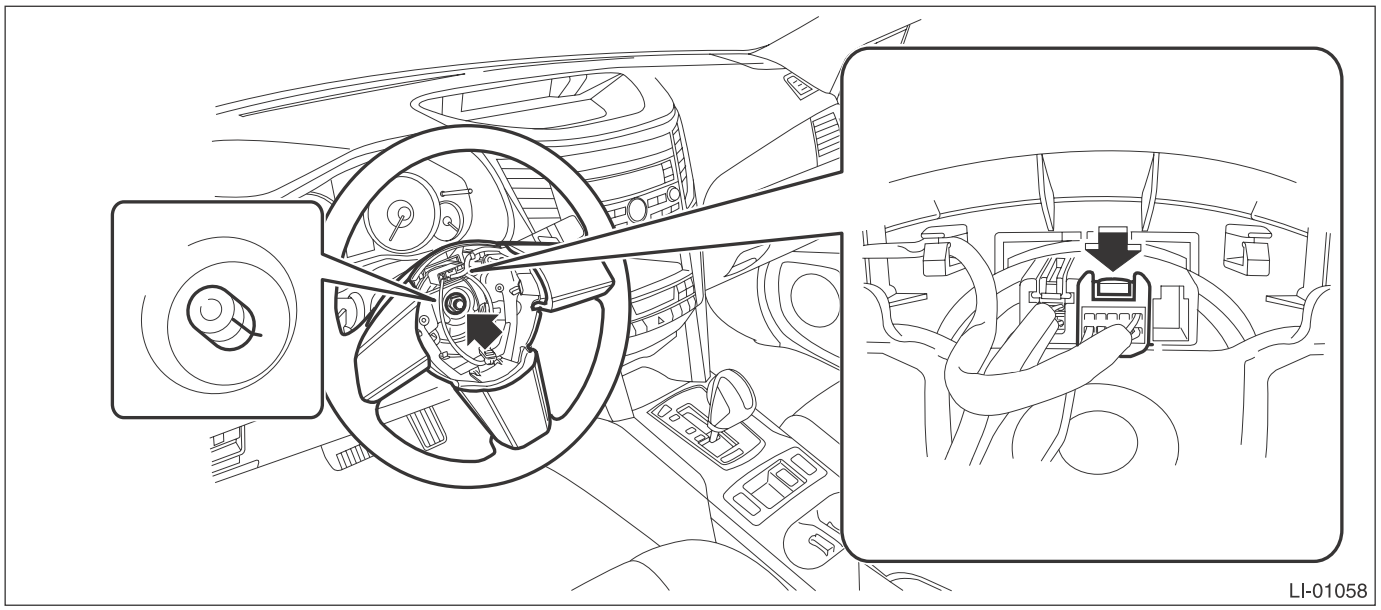

6) Remove the steering column cover.
(1) Lower the lever of the steering column.
(2) Release the claws and remove the screws, then detach the steering column lower cover.

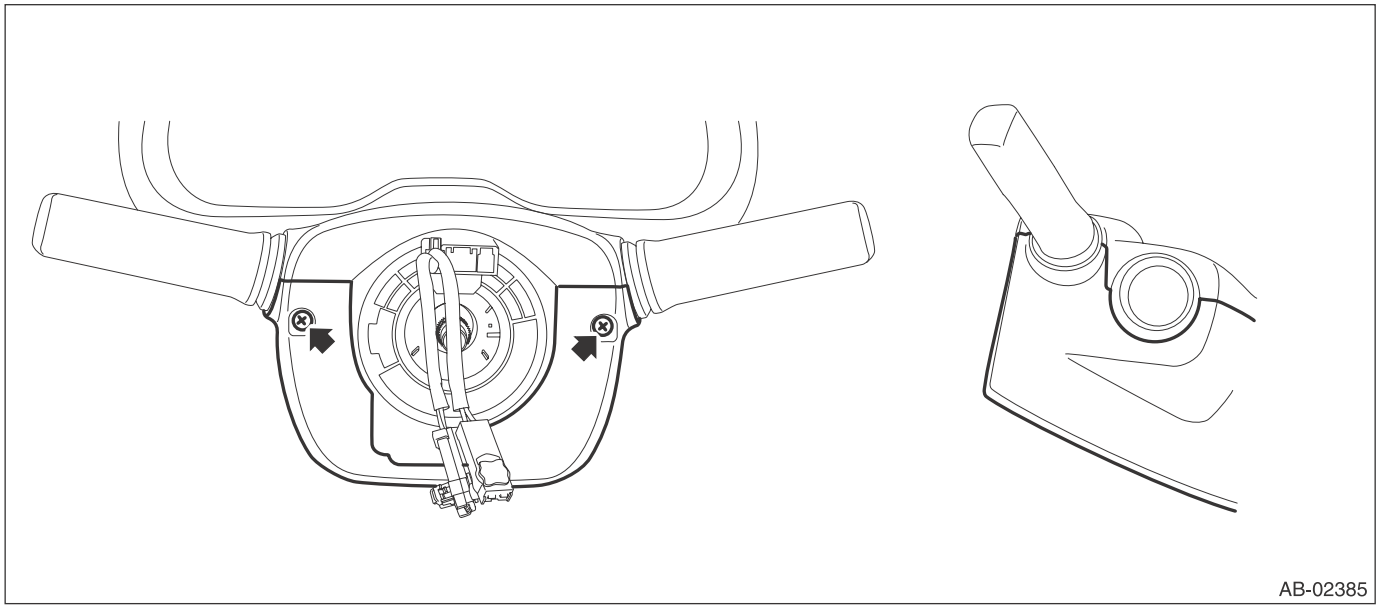

(3) Separate the steering column upper cover and steering upper cover, and remove the steering column upper cover.

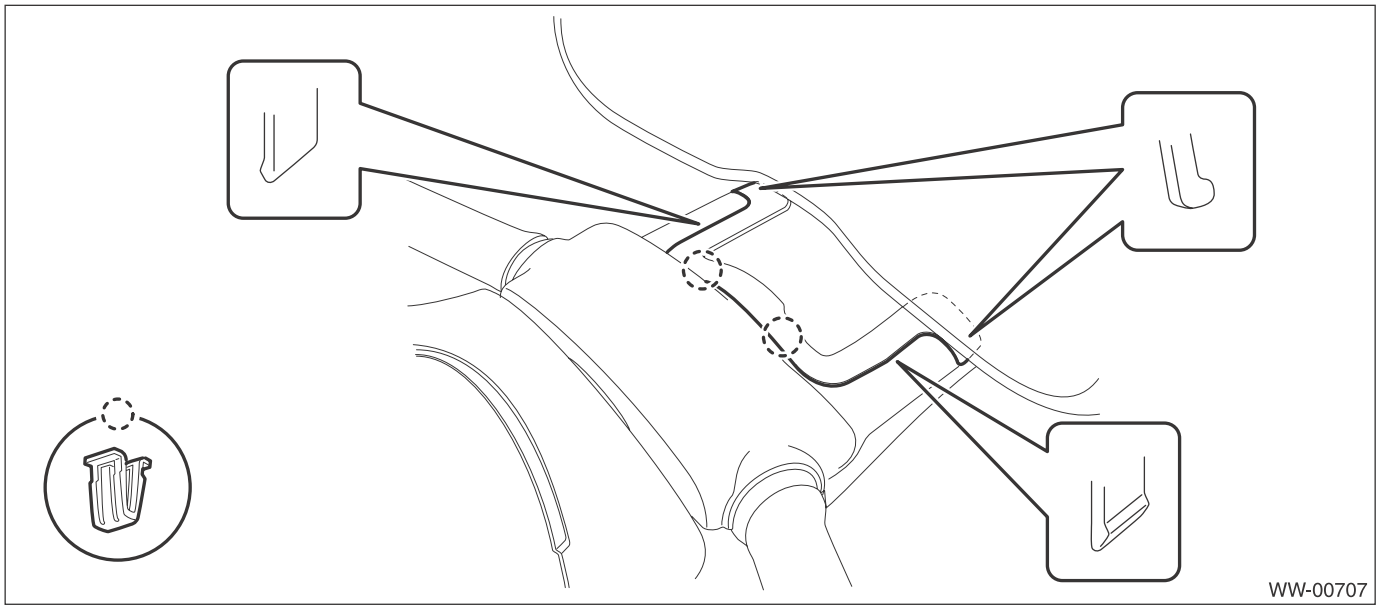

7) Remove the roll connector.

CAUTION:
Make sure that the roll connector is not turned from the original position.

(1) Disconnect the connector under the roll connector.
(2) Release the claws and remove the roll connector.

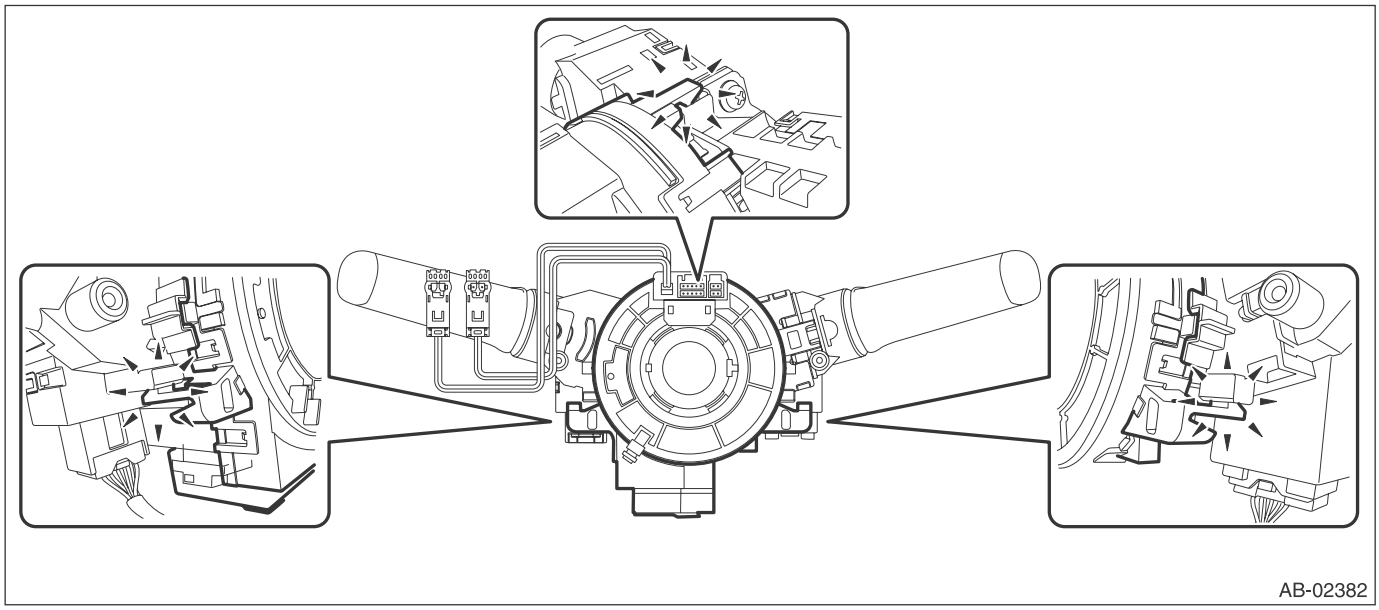

B: INSTALLATION

1) Install each part in the reverse order of removal.

Tightening torque:
Airbag module: 10 N·m (1.0 kgf-m, 7.4 ft-lb)

2) Before installing steering wheel, be sure to adjust the direction of roll connector with steering. <Ref. to AB-93, ADJUSTMENT, Roll Connector.>

Tightening torque:
Steering wheel: 39 N·m (4.0 kgf-m, 28.8 ft-lb)
Clearance between column cover and steering wheel: 2 — 4 mm (0.08 — 0.16 in)

C: INSPECTION

1. VISUAL INSPECTION

Check for the following, and replace the damaged parts with new parts.
- Combination switch is cracked or deformed.
- Roll connector is cracked or deformed.

2. UNIT INSPECTION OF ROLL CONNECTOR

CAUTION:
- **Do not rotate the roll connector to more than the specified number of turns. Otherwise, the roll connector internal wire may be broken.**
- **When determining the end stop, rotate the connector slowly without applying excessive force. Applying excessive force at the end stop may break the internal wire.**

1) Adjust the roll connector. <Ref. to AB-93, ADJUSTMENT, Roll Connector.>
2) Set the roll connector to the central position.
3) Connect the test harness to the connector E and connector F.

Preparation tool: Test harness N (98299SA000), Test harness Q (98299SA040)
- Connector E - Test harness N (1N)
- Connector F - Test harness Q (1Q)

4) With the following conditions, check the resistance between the test harness connector terminals.
- Perform the check with the roll connector centered (front wheels direct straightforward).
- Rotate the roll connector counterclockwise from the center (front wheels direct straightforward) to an end stop. Then, perform the check while rotating it clockwise to approximately 4.5 turns.

Preparation tool: Circuit tester

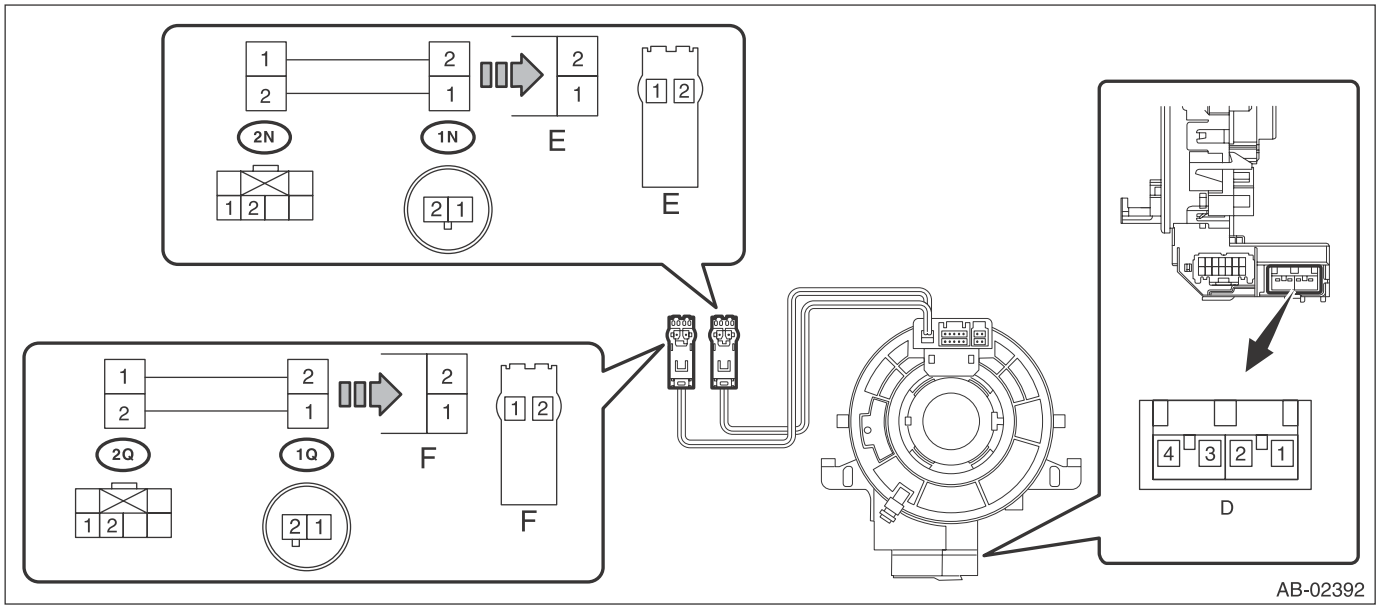

Terminal No.	Inspection conditions	Standard
(2N) No. 1 — (2N) No. 2	Always	Less than 1 Ω
(2Q) No. 1 — (2Q) No. 2	Always	Less than 1 Ω

NOTE:
The connector D is designed to short the terminals D1/D2 and D3/D4 when disconnected.

5) Replace the roll connector with a new part if the inspection result is not within the standard value.

D: ADJUSTMENT

CAUTION:
• Do not rotate the roll connector to more than the specified number of turns. Otherwise, the roll connector internal wire may be broken.
• When determining the end stop, rotate the connector slowly without applying excessive force. Applying excessive force at the end stop may break the internal wire.
1) Check that front wheels are positioned in straight ahead direction.
2) Rotate the roll connector counterclockwise until it stops.
3) Rotate the roll connector clockwise approx. 3 turns until "▲" marks are aligned.

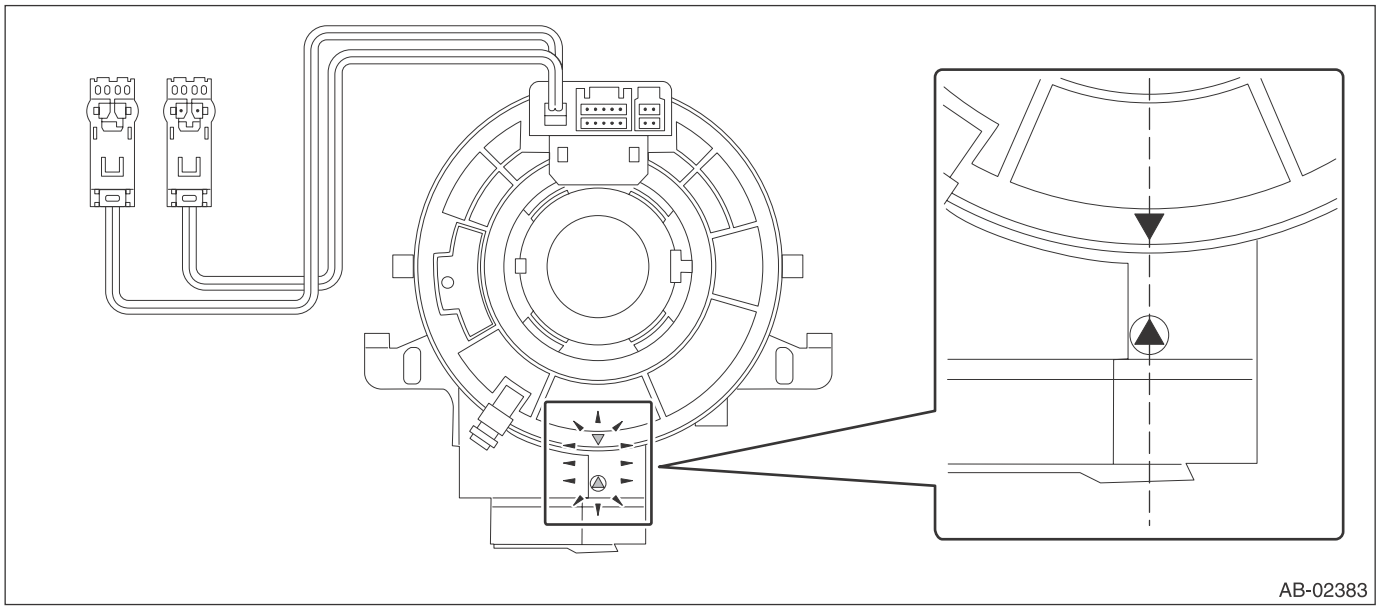

AIRBAG SYSTEM (DIAGNOSTICS)

AB(diag)

		Page
1.	Basic Diagnostic Procedure	2
2.	Check List for Interview	3
3.	General Description	4
4.	Electrical Component Location	18
5.	Airbag Connector	21
6.	Airbag Control Module I/O Signal	22
7.	Subaru Select Monitor	26
8.	Read Diagnostic Trouble Code (DTC)	29
9.	Inspection Mode	30
10.	Clear Memory Mode	31
11.	Display of Status Information	32
12.	Airbag Warning Light Illumination Pattern	33
13.	Airbag Warning Light Failure	34
14.	List of Diagnostic Trouble Code (DTC)	38
15.	Diagnostic Chart with Trouble Code	46

1. Basic Diagnostic Procedure

A: PROCEDURE

Step		Check	Yes	No
1	**CHECK WARNING LIGHT.** Check whether the airbag warning light in the combination meter is lit.	Does the airbag warning light illuminate?	Go to step **2**.	Perform the diagnosis according to phenomenon of the problem.
2	**READ DTC.** 1) Turn the ignition switch to OFF. 2) Connect the Subaru Select Monitor to data link connector. 3) Turn the ignition switch to ON and run the Subaru Select Monitor. 4) Read the DTC. <Ref. to AB(diag)-29, OPERATION, Read Diagnostic Trouble Code (DTC).> NOTE: If the communication function of the Subaru Select Monitor cannot be executed normally, check the communication circuit. <Ref. to AB(diag)-26, COMMUNICATION FOR INITIALIZING IMPOSSIBLE, INSPECTION, Subaru Select Monitor.> 5) Record all DTCs and freeze frame data.	Is DTC displayed?	Go to step **3**.	Go to "Airbag warning light failure"<Ref. to AB(diag)-34, Airbag Warning Light Failure.>.
3	**PERFORM DIAGNOSIS.** 1) Determine the possible cause "List of Diagnostic Trouble Code (DTC)"<Ref. to AB(diag)-38, List of Diagnostic Trouble Code (DTC).>. 2) Inspect the DTC using "List of Diagnostic Trouble Code (DTC)". 3) Repair the trouble cause. 4) Perform the Clear Memory Mode. <Ref. to AB(diag)-31, Clear Memory Mode.> 5) Perform the Inspection Mode. <Ref. to AB(diag)-30, Inspection Mode.> 6) Read any other DTCs displayed.	Is DTC displayed?	Perform the procedure 1) to 5) in step 3.	Finish the diagnosis.

2. Check List for Interview

A: CHECK

Customer's Name		Inspector's Name	
Date Vehicle Brought in	/ /	Registration No.	
Odometer Reading	km miles	V.I.N.	
Date Problem Occurred	/ /	Registration Year	/ /
Weather	❑ Fine ❑ Cloudy ❑ Rainy ❑ Snowy ❑ Others:		
Temperature	°C (°F)		
Road Condition	❑ Flat road ❑ Uphill ❑ Downhill ❑ Gravel road ❑ Others:		
Vehicle Operation	❑ Starting ❑ Idling ❑ Driving ❑ Constant speed ❑ Accelerating ❑ Decelerating ❑ Turning ❑ Others:		
Details of Problem			
Airbag Warning Light Operation	❑ Normal (After turning the ignition switch to ON, lit for approximately 6 seconds and goes off.) ❑ Remains ON ❑ Remains OFF		
DTC output	❑ OK code ❑ DTC: (Code:)		

3. General Description

A: CAUTION

Refer to “CAUTION” in “General Description” in Air-bag System. <Ref. to AB-9, CAUTION, General Description.>

B: INSPECTION

Measure the battery voltage and check electrolyte.

Standard voltage: 12 V

Specific gravity: 1.260 or more

C: PREPARATION TOOL

CAUTION:
To measure the voltage and resistance of airbag system component, be sure to use the specified test harness.

1. SPECIAL TOOL

- Subaru Select Monitor

ILLUSTRATION	TOOL NUMBER	DESCRIPTION	REMARKS
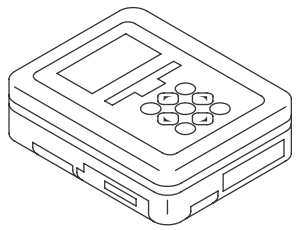 ST1B022XU0	1B022XU0	SUBARU SELECT MONITOR III KIT	Used for troubleshooting the electrical system.

- TEST HARNESS H

ILLUSTRATION	TOOL NUMBER	DESCRIPTION	REMARKS
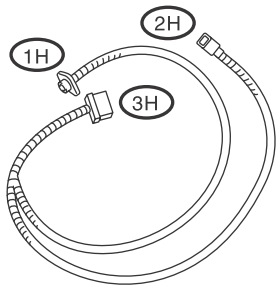 ST98299FA030	98299FA030	TEST HARNESS H	Used when measuring voltage and resistance of the front sub sensor.

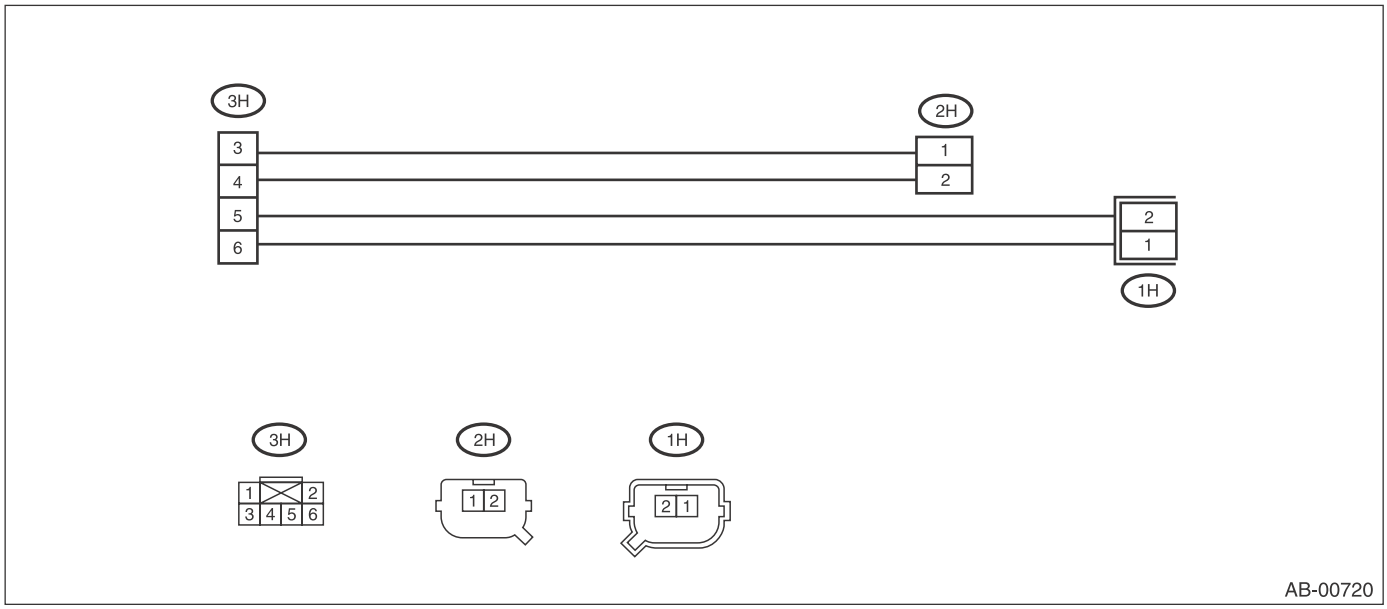

- TEST HARNESS N

ILLUSTRATION	TOOL NUMBER	DESCRIPTION	REMARKS
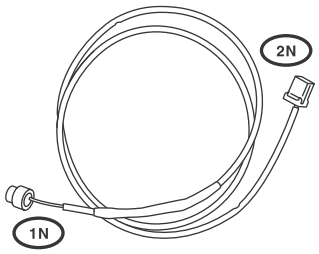 ST98299SA000	98299SA000	TEST HARNESS N	Used when measuring voltage and resistance of driver's airbag module, seat belt pretensioner and curtain airbag module.

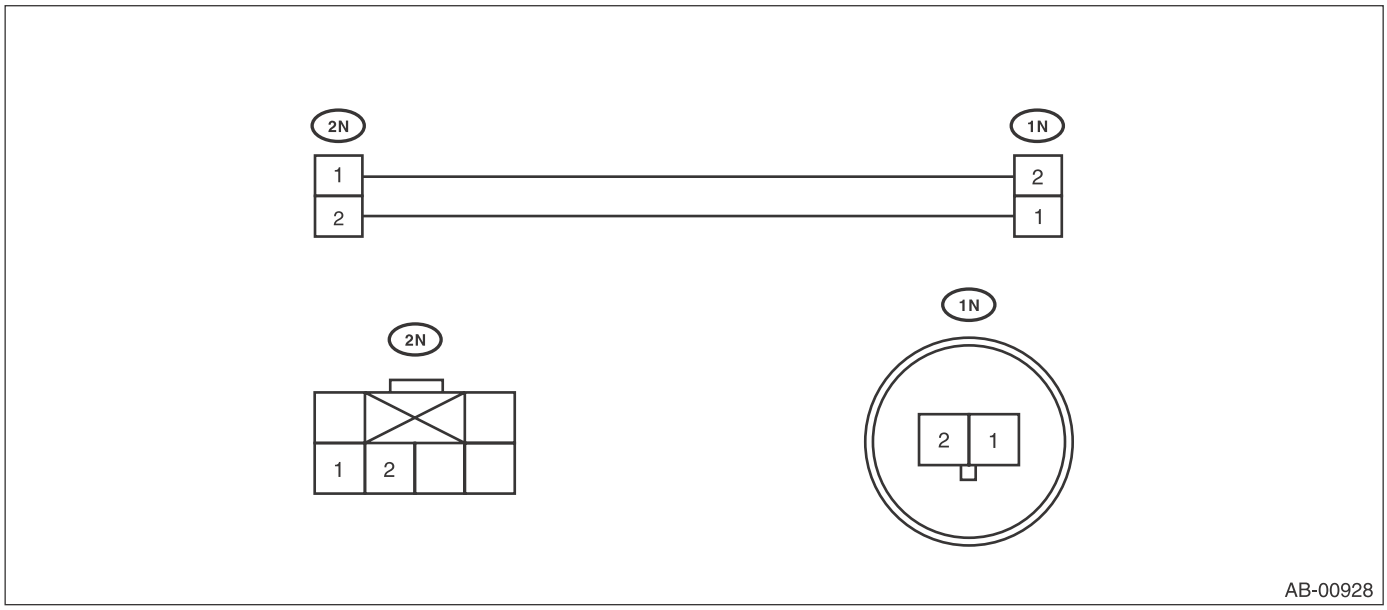

- TEST HARNESS P

ILLUSTRATION	TOOL NUMBER	DESCRIPTION	REMARKS
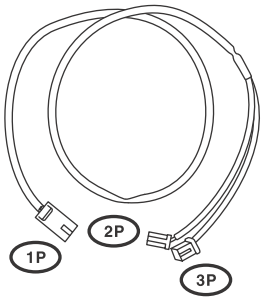 ST98299SA020	98299SA020	TEST HARNESS P	Used when measuring voltage and resistance of passenger's airbag module harness.

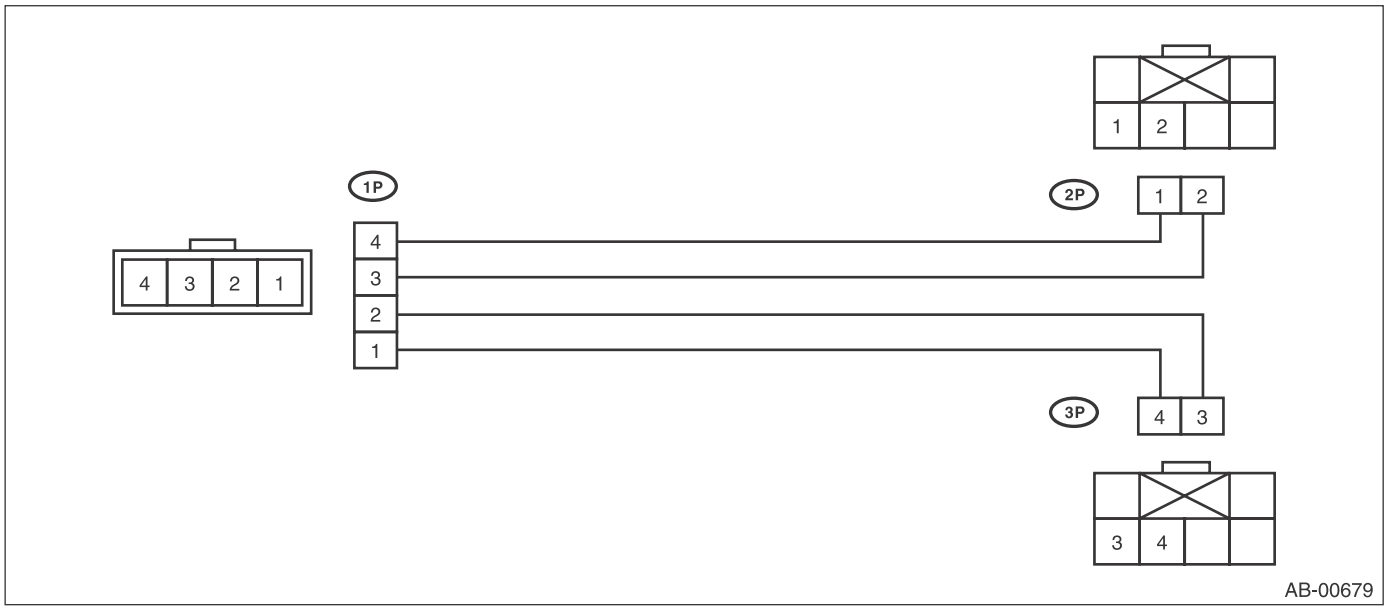

- TEST HARNESS Q

ILLUSTRATION	TOOL NUMBER	DESCRIPTION	REMARKS
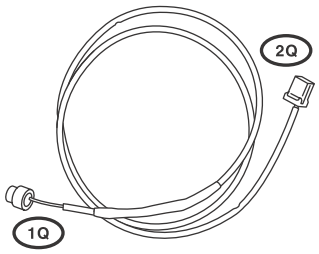 ST98299SA040	98299SA040	TEST HARNESS Q	Used when measuring voltage and resistance of driver's airbag module.

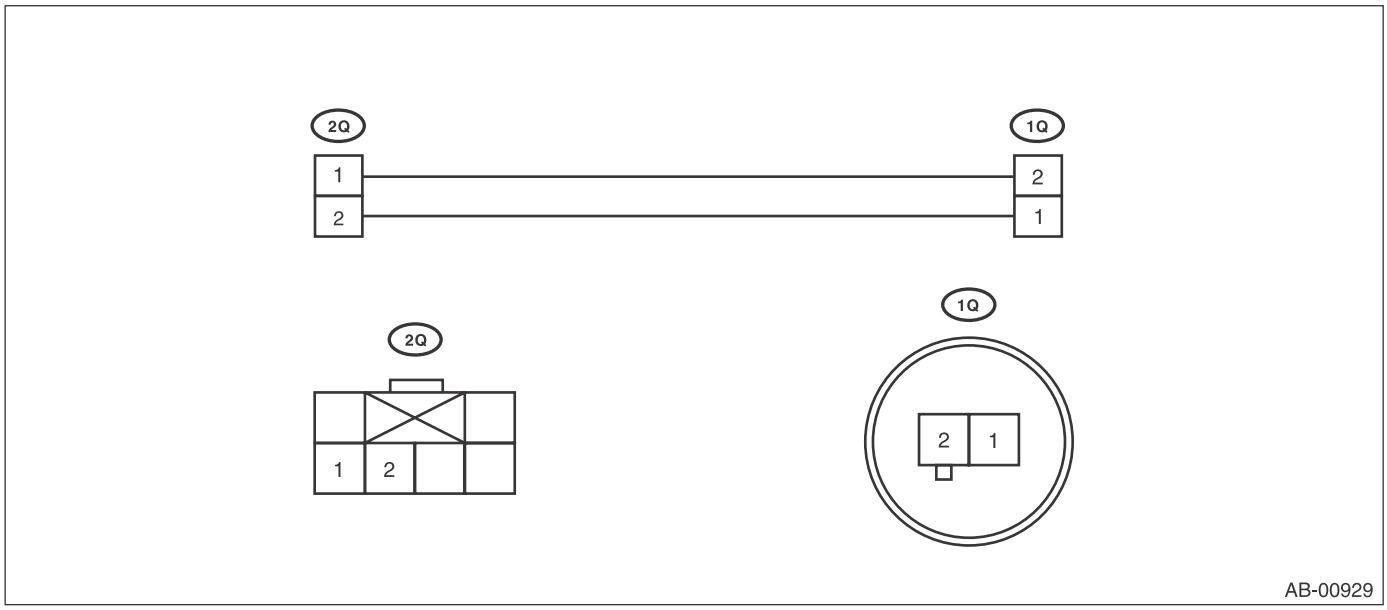

- TEST HARNESS AG

ILLUSTRATION	TOOL NUMBER	DESCRIPTION	REMARKS
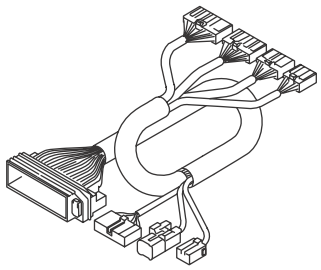 ST98299AG070	98299AG070	TEST HARNESS AG	Used when measuring voltage and resistance of airbag control module.

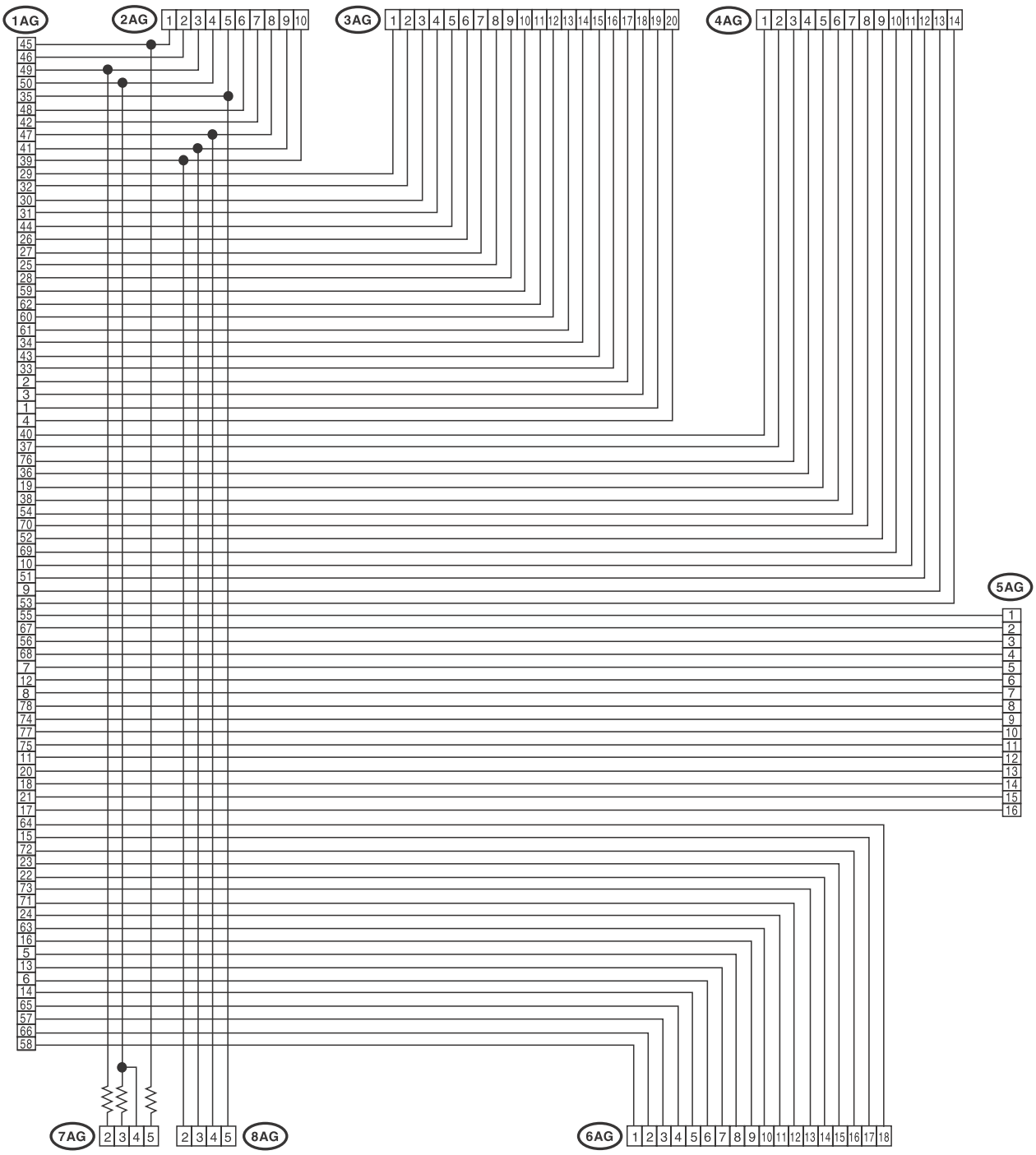
1AG
2AG
3AG
4AG
5AG
6AG
7AG
8AG
AB-01902

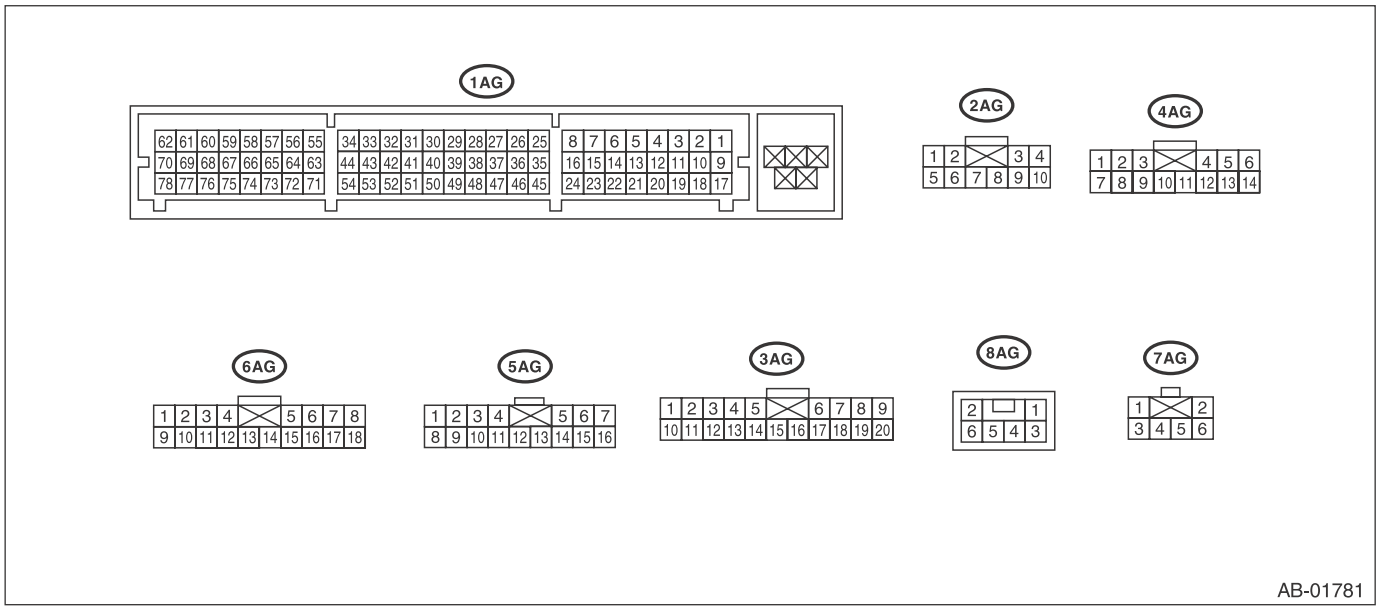
1AG
62 61 60 59 58 57 56 55
70 69 68 67 66 65 64 63
78 77 76 75 74 73 72 71
34 33 32 31 30 29 28 27 26 25
44 43 42 41 40 39 38 37 36 35
54 53 52 51 50 49 48 47 46 45
8 7 6 5 4 3 2 1
16 15 14 13 12 11 10 9
24 23 22 21 20 19 18 17
2AG
1 2 3 4
5 6 7 8 9 10
4AG
1 2 3 4 5 6
7 8 9 10 11 12 13 14
6AG
1 2 3 4 5 6 7 8
9 10 11 12 13 14 15 16 17 18
5AG
1 2 3 4 5 6 7
8 9 10 11 12 13 14 15 16
3AG
1 2 3 4 5 6 7 8 9
10 11 12 13 14 15 16 17 18 19 20
8AG
2 1
6 5 4 3
7AG
1 2
3 4 5 6
AB-01781

- TEST HARNESS AH

ILLUSTRATION	TOOL NUMBER	DESCRIPTION	REMARKS
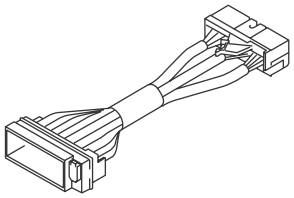 ST98299AG080	98299AG080 (Newly adopted tool)	TEST HARNESS AH	Used together with test harness AG when measuring voltage and resistance of the airbag control module.

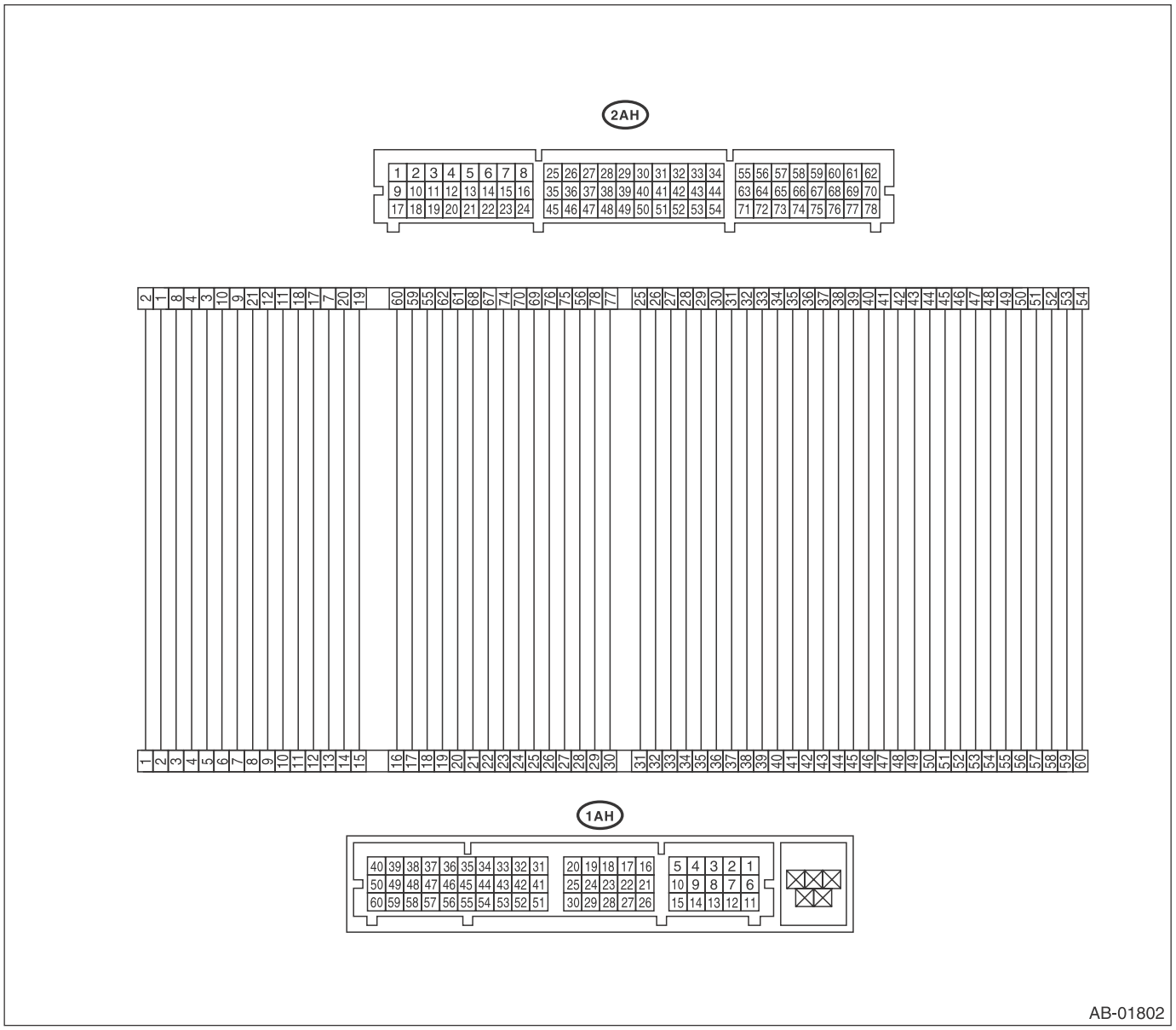

AB-01802

- TEST HARNESS V

ILLUSTRATION	TOOL NUMBER	DESCRIPTION	REMARKS
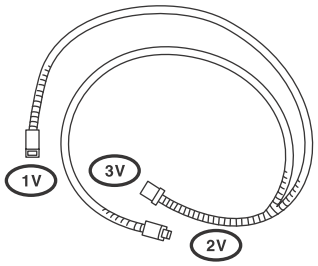 ST98299AG010	98299AG010	TEST HARNESS V	Used when measuring voltage and resistance of side airbag sensor and curtain airbag sensor.

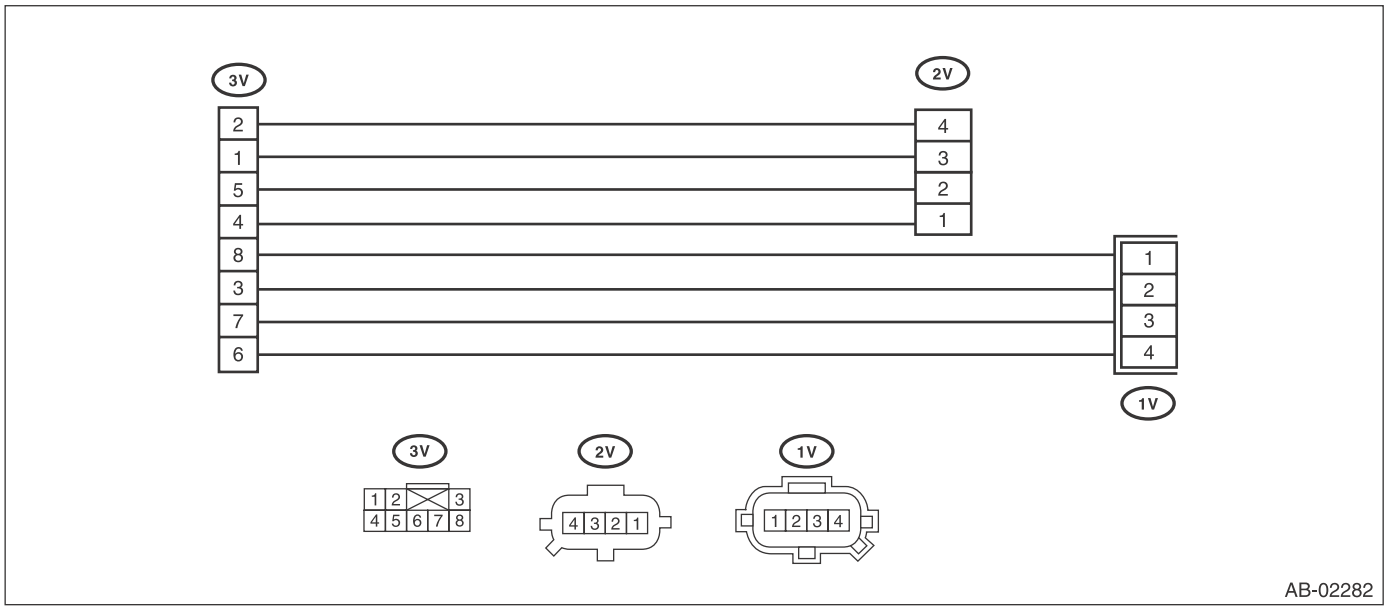

- AIRBAG RESISTOR

ILLUSTRATION	TOOL NUMBER	DESCRIPTION	REMARKS
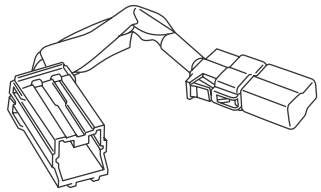 ST98299PA040	98299PA040	AIRBAG RESISTOR	Used in replacement of airbag module for which resistance value is same as airbag module. Two ST are required for diagnosis of two-stage inflator type airbag module.

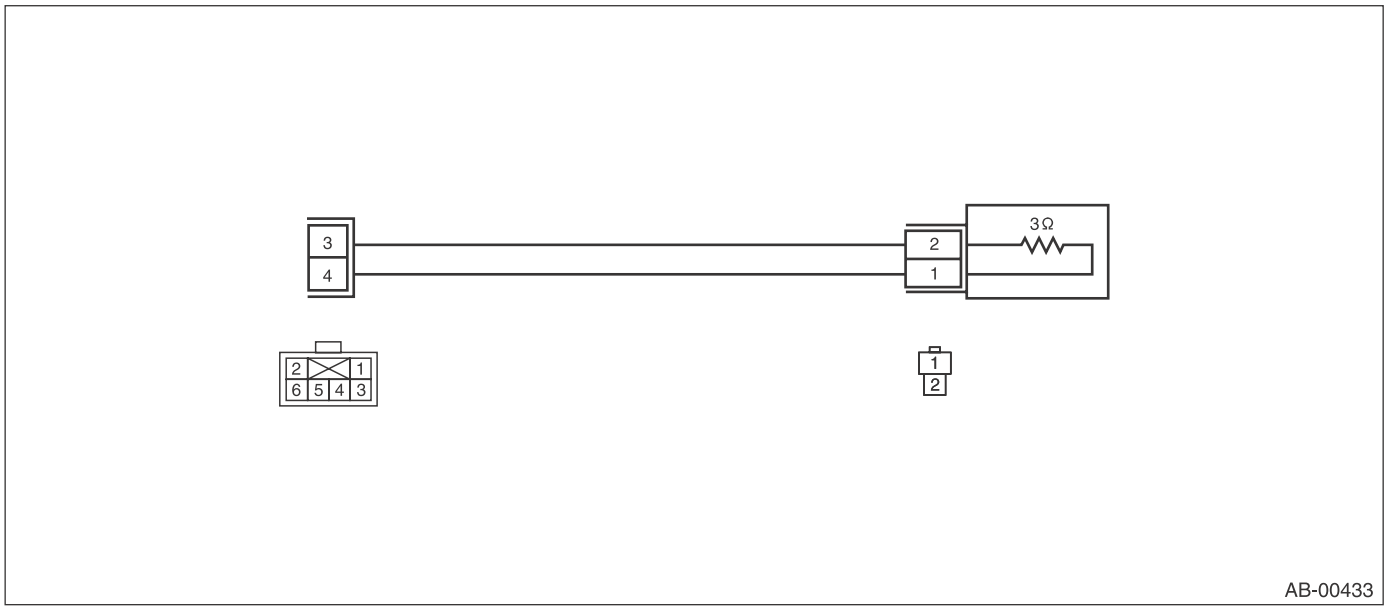

- TEST HARNESS AJ

ILLUSTRATION	TOOL NUMBER	DESCRIPTION	REMARKS
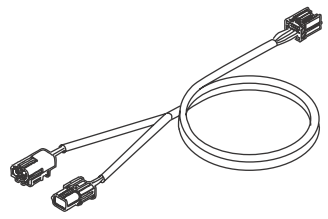 ST98299FG000	98299FG000	TEST HARNESS AJ	Used when measuring power supply and resistance of side airbag harness.

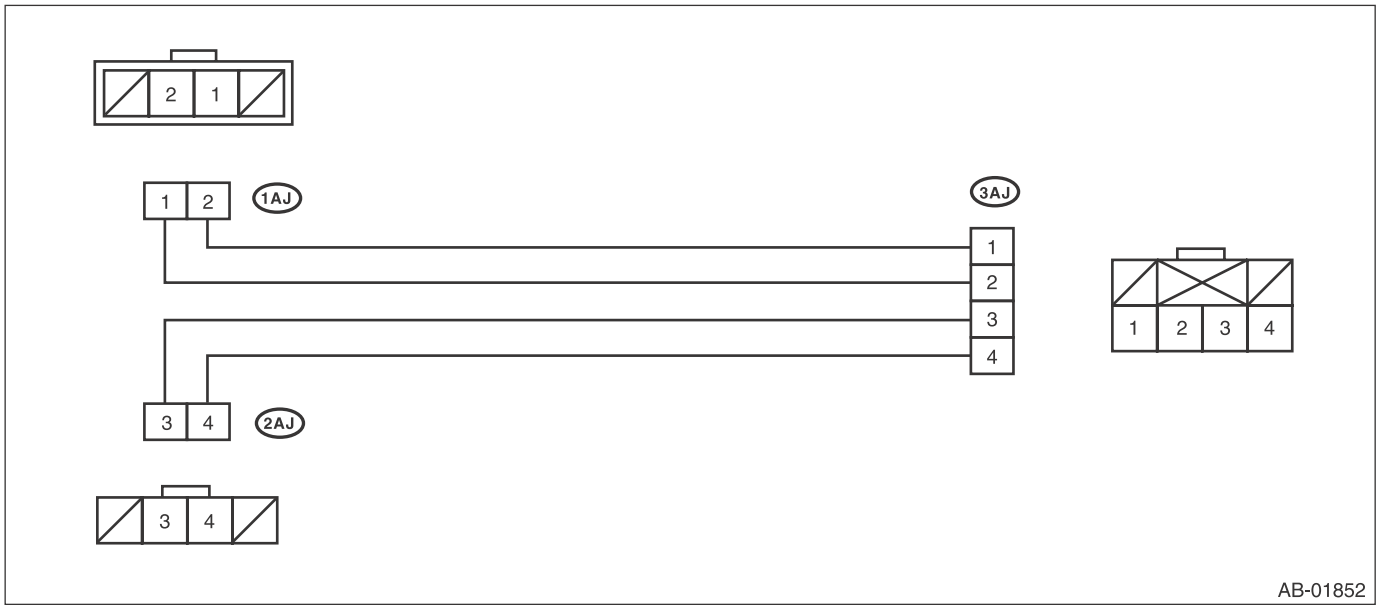

- TEST HARNESS AI

ILLUSTRATION	TOOL NUMBER	DESCRIPTION	REMARKS
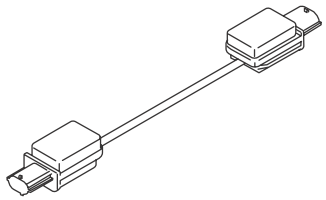 ST98299AG090	98299AG090	TEST HARNESS AI	• Used when diagnosing the side airbag sensor and curtain airbag sensor. • Used together with test harness V.

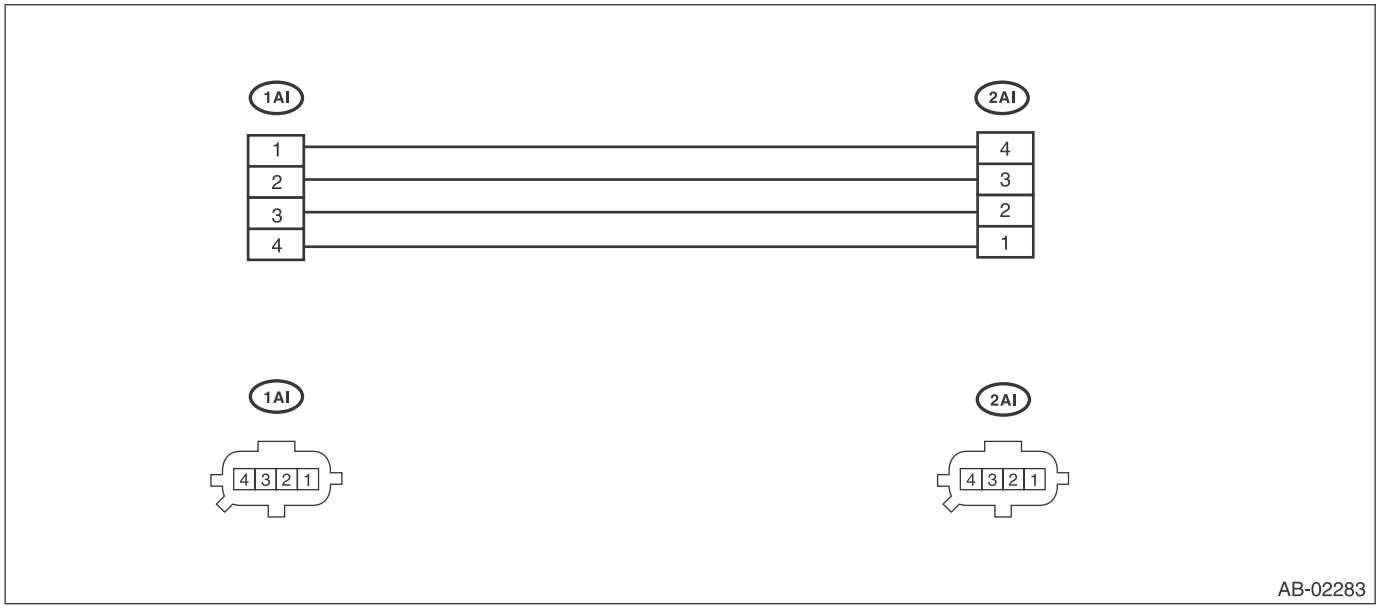

- TEST HARNESS AD

ILLUSTRATION	TOOL NUMBER	DESCRIPTION	REMARKS
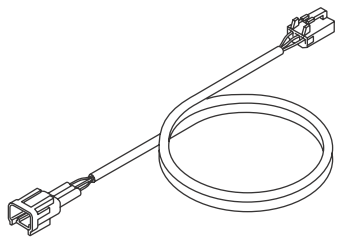 ST98299XA020	98299XA020	TEST HARNESS AD	Used when measuring voltage and resistance of the occupant detection system.

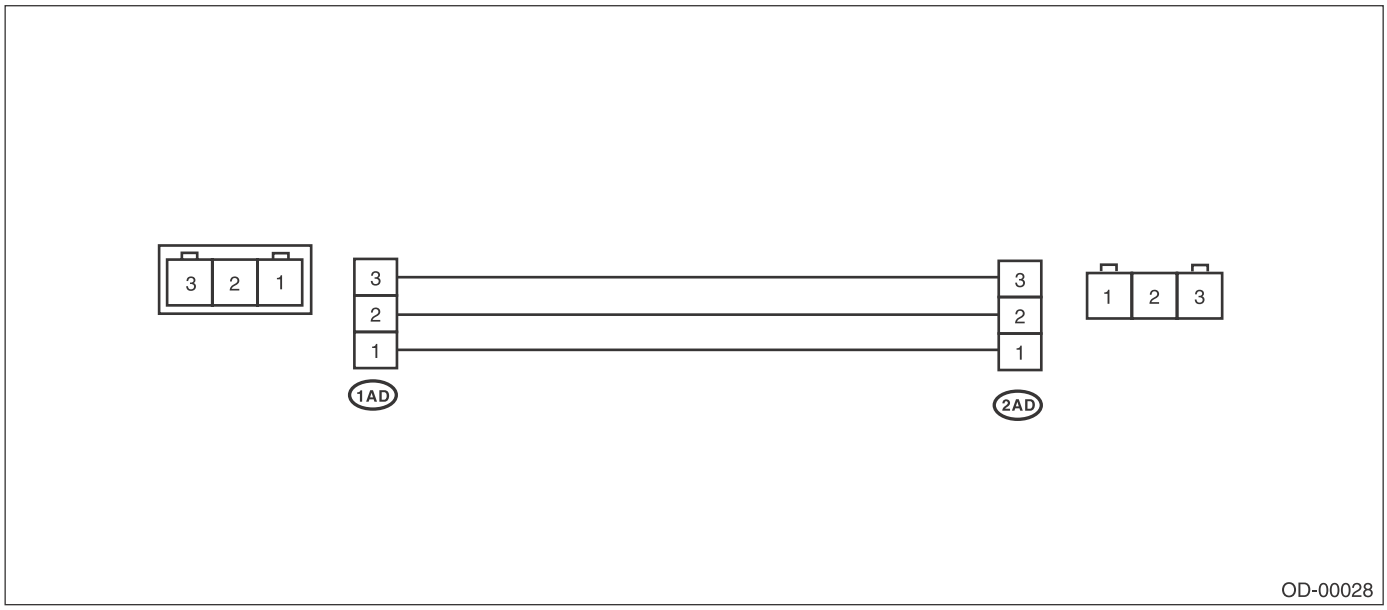

2. GENERAL TOOL

TOOL NAME	REMARKS
Circuit tester	Used for measuring resistance, voltage and current.
Oscilloscope	Used for measuring the sensor.

4. Electrical Component Location

A: LOCATION

- OUTBACK model

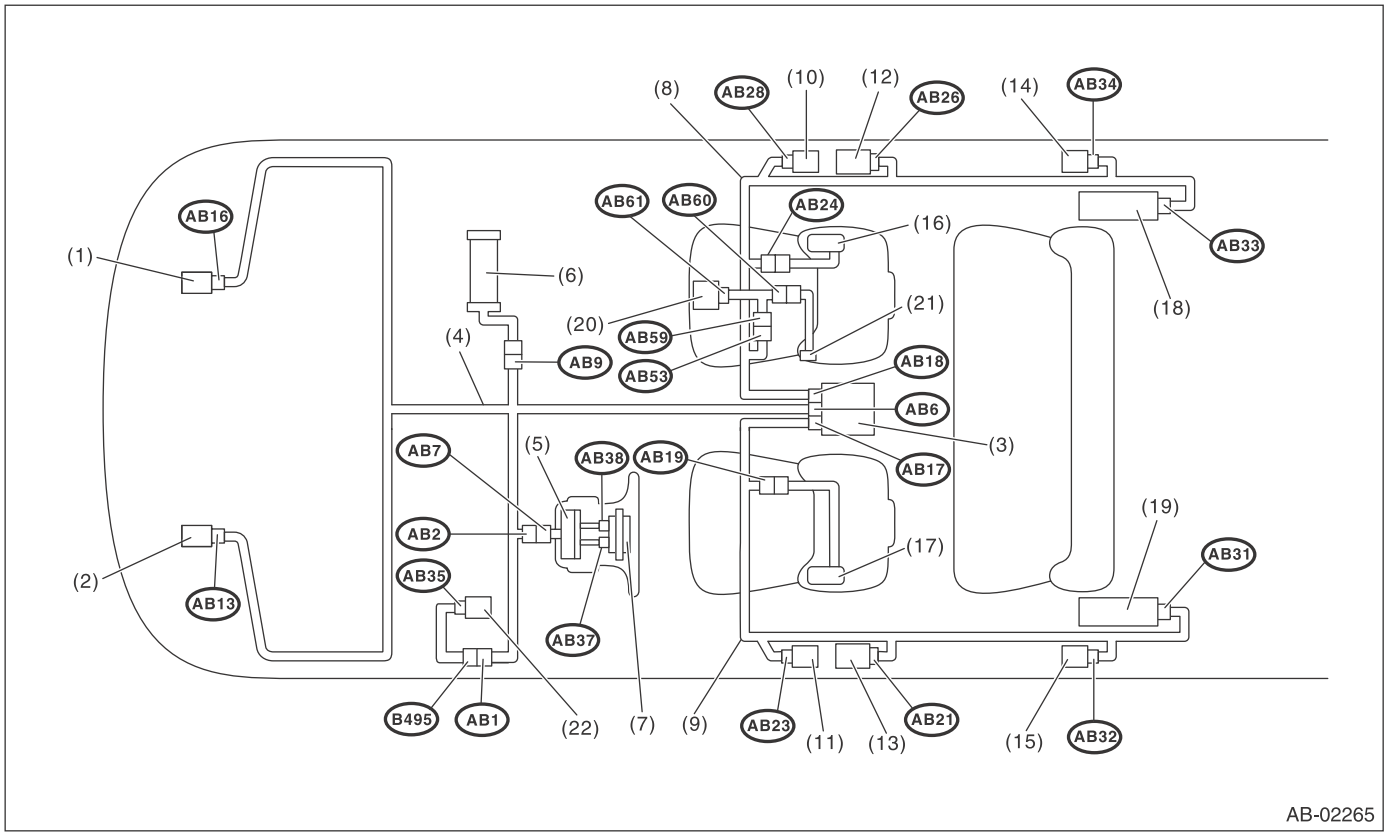

- Sedan model

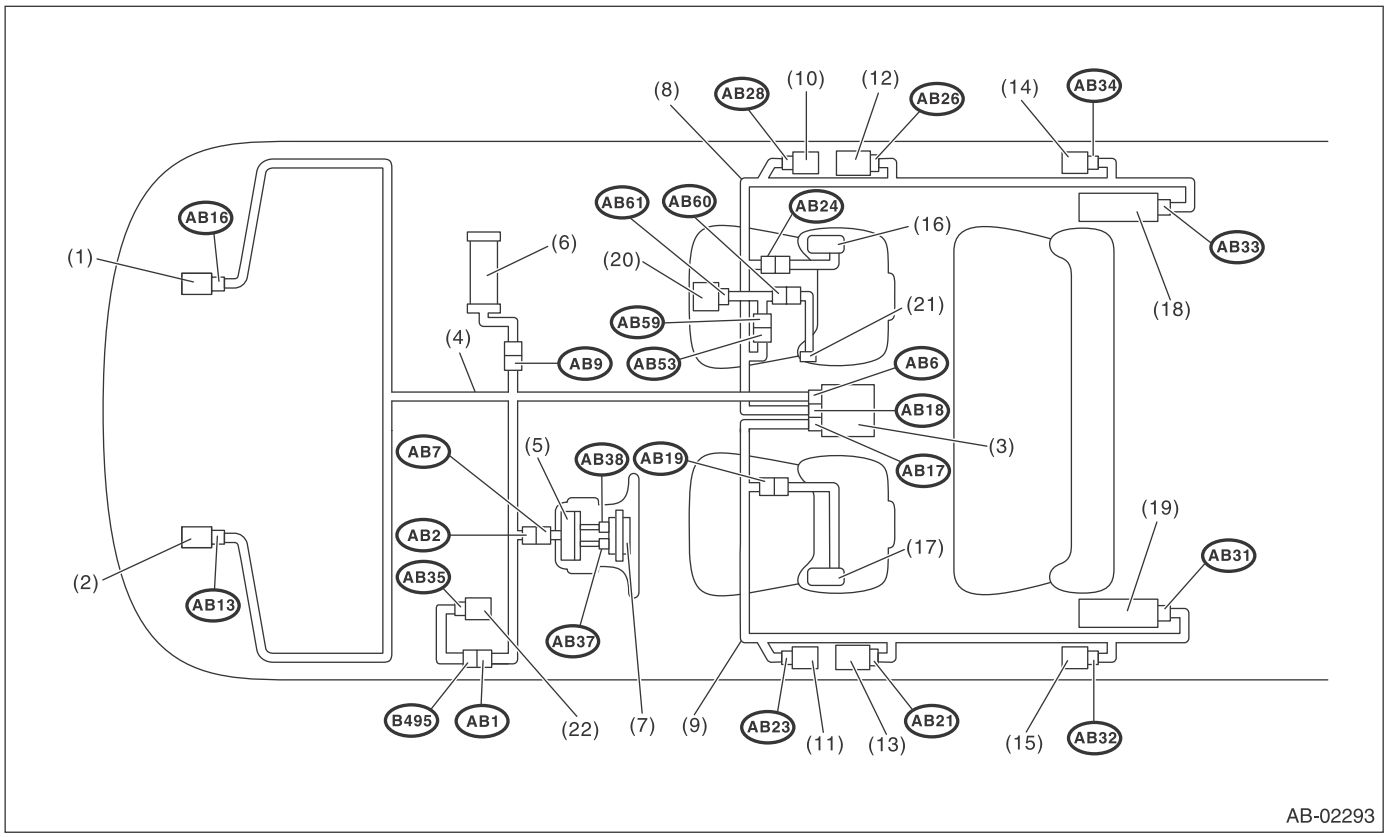

(1) Front sub sensor (RH)
(2) Front sub sensor (LH)
(3) Airbag control module
(4) Airbag main harness
(5) Roll connector
(6) Passenger's airbag inflator
(7) Driver's airbag inflator
(8) Airbag rear harness (RH)
(9) Airbag rear harness (LH)
(10) Side airbag sensor (RH)
(11) Side airbag sensor (LH)
(12) Seat belt pretensioner (RH)
(13) Seat belt pretensioner (LH)
(14) Curtain airbag sensor (RH)
(15) Curtain airbag sensor (LH)
(16) Side airbag inflator (RH)
(17) Side airbag inflator (LH)
(18) Curtain airbag inflator (RH)
(19) Curtain airbag inflator (LH)
(20) Occupant detection control module
(21) Buckle switch (RH)
(22) Fuse box

Connector No.	(AB1)	(AB2)	(AB6)	(AB7)	(AB9)	(AB13)	(AB16)	(AB17)	(AB18)	(AB19)	(AB21)	(AB23)
Pin	10	4	30	4	4	2	2	15 or 24	15 or 24	4	2	4
Color	Gray	Yellow	Yellow	Yellow	Yellow	Yellow	Yellow	Yellow	Yellow	Yellow	Black	Yellow
Male/Female	Female	Female	Female	Male	Female	Female	Female	Female	Female	Female	Female	Female
Connector No.	(AB24)	(AB26)	(AB28)	(AB31)	(AB32)	(AB33)	(AB34)	(AB35)	(AB37)	(AB38)	(AB53)	(AB59)
Pin	4	2	4	2	4	2	4	2	2	2	3	3
Color	Yellow	Black	Yellow	Black	Yellow	Black	Yellow	★	Orange	Black	Brown	Brown
Male/Female	Female	Female	Female	Female	Female	Female	Female	Female	Female	Female	Female	Male
Connector No.	(AB60)	(AB61)										
Pin	2	10										
Color	Yellow	Black										
Male/Female	Male	Female										

★: White or natural

5. Airbag Connector

A: PROCEDURE

For operation procedures, refer to “Airbag Connector”. <Ref. to AB-18, Airbag Connector.>

6. Airbag Control Module I/O Signal

A: ELECTRICAL SPECIFICATION

- OUTBACK model

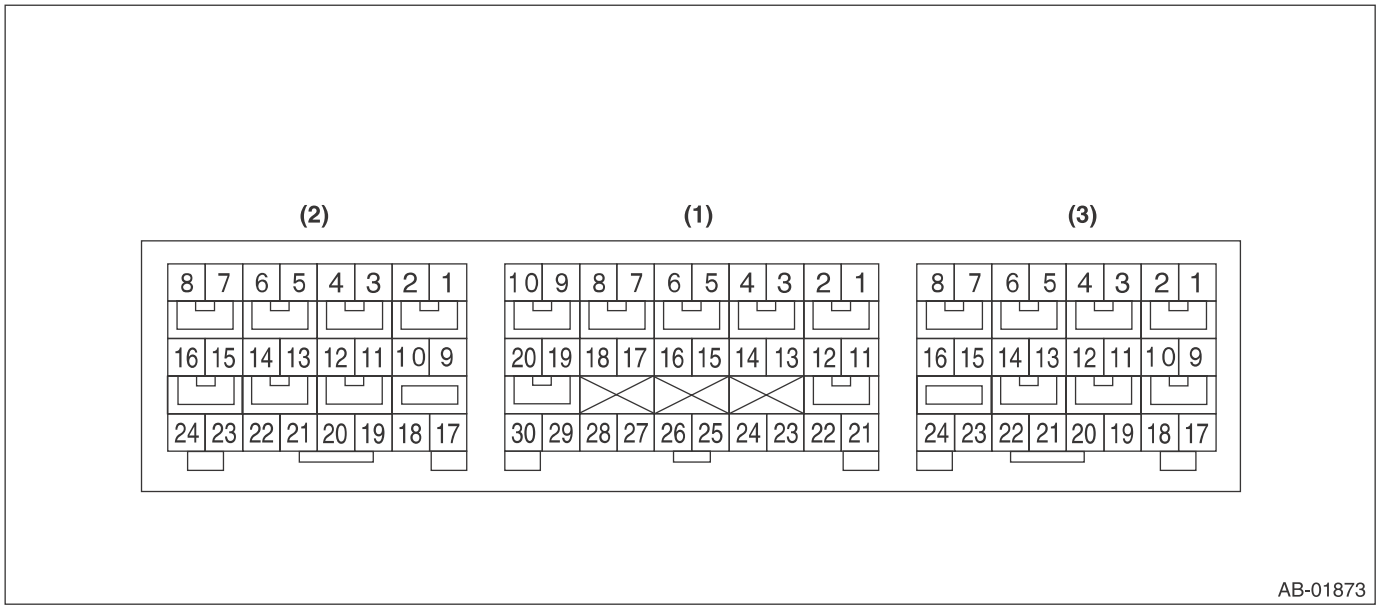

- Terminal numbers in airbag control module connector are shown in the figure.
- Airbag warning light illuminates when the connector is removed from airbag control module.

Airbag Control Module I/O Signal

Item		Control module terminal No.
Data link connector		(1) — 16
Combination meter		(1) — 11
Ignition power supply	Dedicated fuse	(1) — 21
Passenger's airbag module level one	+	(1) — 4
	–	(1) — 3
Passenger's airbag module level two	+	(1) — 1
	–	(1) — 2
Driver's airbag module level one	+	(1) — 5
	–	(1) — 6
Driver's airbag module level two	+	(1) — 8
	–	(1) — 7
Front sub sensor LH	+	(1) — 30
	–	(1) — 28
Front sub sensor RH	+	(1) — 29
	–	(1) — 27
Ground line (GND)		(1) — 25
		(1) — 26
Passenger's airbag ON indicator		(1) — 23
Passenger's airbag OFF indicator		(1) — 17
Passenger's seat belt warning		(1) — 15
Side airbag sensor LH Curtain airbag sensor LH	+	(3) — 17
	–	(3) — 18
Side airbag module LH	+	(3) — 8
	–	(3) — 7
Curtain airbag module LH	+	(3) — 5
	–	(3) — 6
Seat belt pretensioner LH	+	(3) — 4
	–	(3) — 3
Side airbag sensor RH Curtain airbag sensor RH	+	(2) — 24
	–	(2) — 23
Seat belt pretensioner RH	+	(2) — 5
	–	(2) — 6
Side airbag module RH	+	(2) — 1
	–	(2) — 2
Curtain airbag module RH	+	(2) — 4
	–	(2) — 3
Occupant detection control module	+	(2) — 9
	–	(2) — 17

- Sedan model

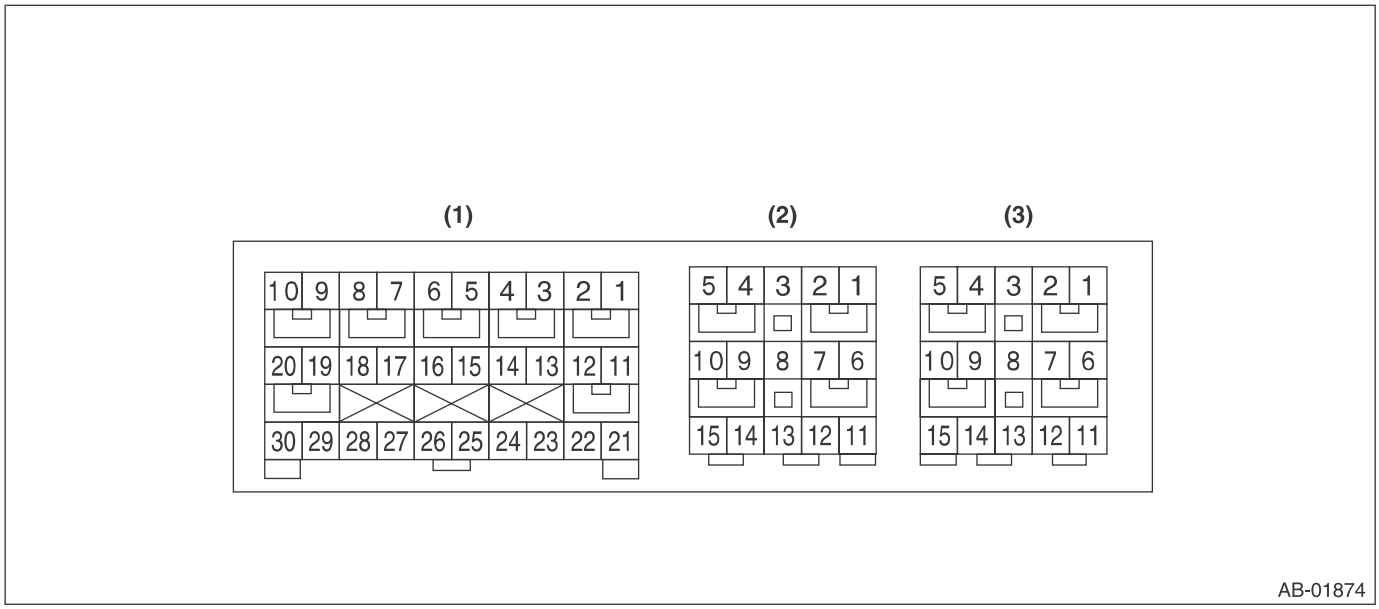

- Terminal numbers in airbag control module connector are shown in the figure.
- Airbag warning light illuminates when the connector is removed from airbag control module.

Item		Control module terminal No.
Data link connector		(1) — 16
Combination meter		(1) — 11
Ignition power supply	Dedicated fuse	(1) — 21
Passenger's airbag module level one	+	(1) — 4
	–	(1) — 3
Passenger's airbag module level two	+	(1) — 1
	–	(1) — 2
Driver's airbag module level one	+	(1) — 5
	–	(1) — 6
Driver's airbag module level two	+	(1) — 8
	–	(1) — 7
Front sub sensor LH	+	(1) — 30
	–	(1) — 28
Front sub sensor RH	+	(1) — 29
	–	(1) — 27
Ground line (GND)		(1) — 25
		(1) — 26
Passenger's airbag ON indicator		(1) — 23
Passenger's airbag OFF indicator		(1) — 17
Passenger's seat belt warning		(1) — 15
Seat belt pretensioner LH	+	(3) — 4
	–	(3) — 5
Side airbag sensor LH Curtain airbag sensor LH	+	(3) — 8
	–	(3) — 11
Side airbag module LH	+	(3) — 7
	–	(3) — 6
Curtain airbag module LH	+	(3) — 9
	–	(3) — 10
Seat belt pretensioner RH	+	(2) — 2
	–	(2) — 1
Side airbag sensor RH Curtain airbag sensor RH	+	(2) — 8
	–	(2) — 15
Side airbag module RH	+	(2) — 9
	–	(2) — 10
Curtain airbag module RH	+	(2) — 7
	–	(2) — 6
Occupant detection control module	+	(2) — 14
	–	(2) — 13

B: WIRING DIAGRAM

Refer to the WI section wiring diagram. <Ref. to WI-37, WIRING DIAGRAM, Airbag System.>

7. Subaru Select Monitor

A: OPERATION

For operation procedures, refer to the “PC application help for Subaru Select Monitor”.

B: INSPECTION

1. COMMUNICATION FOR INITIALIZING IMPOSSIBLE

DTC DETECTING CONDITION:
Defective harness connector
TROUBLE SYMPTOM:
Communication is impossible between the airbag control module and the Subaru Select Monitor.

CAUTION:
Before performing diagnosis, refer to “CAUTION” in “General Description”. <Ref. to AB(diag)-4, CAUTION, General Description.>
WIRING DIAGRAM:

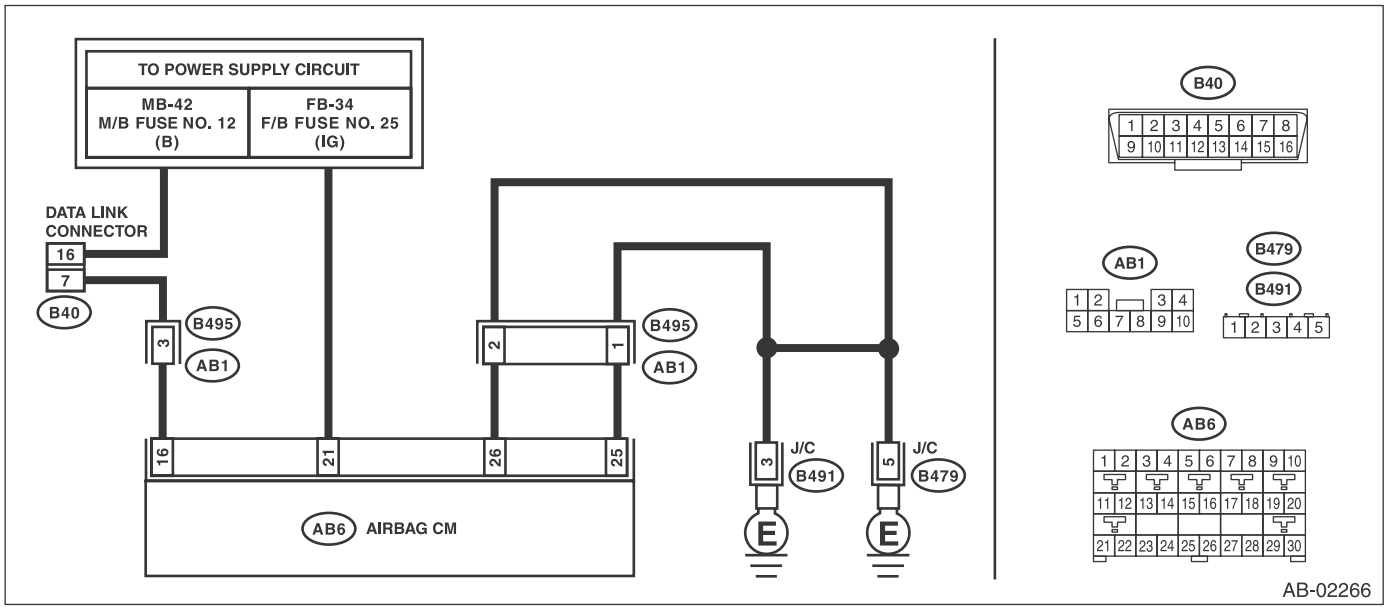

Step		Check	Yes	No
1	**CHECK IGNITION SWITCH.**	Is the ignition switch ON?	Go to step **2**.	Turn the ignition switch to ON, and select the airbag mode using the Subaru Select Monitor.
2	**CHECK BATTERY.** 1) Turn the ignition switch to OFF. 2) Measure the battery voltage.	Is the voltage 11 V or more?	Go to step **3**.	Charge or replace the battery.
3	**CHECK BATTERY TERMINAL.**	Is there poor contact at battery terminal?	Repair or tighten the battery terminal.	Go to step **4**.
4	**CHECK SUBARU SELECT MONITOR COMMUNICATION.** 1) Turn the ignition switch to ON. 2) Using the Subaru Select Monitor, check whether communication to other systems can be executed normally.	Is the system name displayed on Subaru Select Monitor?	Go to step **11**.	Go to step **5**.
5	**CHECK SUBARU SELECT MONITOR.**	Is Subaru Select Monitor powered on?	Go to step **7**.	Go to step **6**.

	Step	Check	Yes	No
6	**CHECK FUSE.** Remove fuse No. 12 from the fuse & relay box, and perform visual inspection.	Is the fuse OK?	Repair the harness between the battery and the data link connector.	Replace the fuse. If the fuse is blown out again, check the power supply circuit.
7	**CHECK AIRBAG CONTROL MODULE CONNECTOR.** 1) Turn the ignition switch to OFF, disconnect the battery ground cable, and wait for 60 seconds or more. 2) Confirm that the connectors of airbag control module (AB6, AB17, and AB18) are securely connected.	Is the connector of the airbag control module securely connected?	Go to step **8**.	Connect the connector of the airbag control module.
8	**CHECK SUBARU SELECT MONITOR COMMUNICATION.** 1) Disconnect the airbag control module connector. 2) Connect the battery ground terminal. 3) Turn the ignition switch to ON. 4) Check whether communication to other systems can be executed normally.	Is the system name displayed on Subaru Select Monitor?	Replace the airbag control module. <Ref. to AB-64, Airbag Control Module.>	Go to step **9**.
9	**CHECK HARNESS CONNECTOR BETWEEN EACH CONTROL MODULE AND DATA LINK CONNECTOR.** 1) Turn the ignition switch to OFF. 2) Disconnect the airbag control module, VDCCM&H/U, body integrated unit, impact sensor, TPMS CM, power steering CM, ECM and TCM. 3) Measure the resistance between data link connector and chassis ground. ***Connector & terminal*** ***(B40) No. 7 — Chassis ground:***	Is the resistance 1 MΩ or more?	Go to step **10**.	Repair the harness and connector between each control module and data link connector. (Replace the entire harness if repair is necessary for airbag harness.
10	**CHECK OUTPUT SIGNAL TO AIRBAG CONTROL MODULE.** 1) Turn the ignition switch to ON in the condition of step 9. 2) Measure the voltage between data link connector and chassis ground. ***Connector & terminal*** ***(B40) No. 7 (+) — Chassis ground (–):***	Is the voltage less than 1 V?	Repair each control module.	Repair the harness and connector between each control module and data link connector. (Replace the entire harness if repair is necessary for airbag harness.
11	**CHECK FUSE.** Remove fuse No. 25 from the fuse & relay box, and perform visual inspection.	Is the fuse OK?	Go to step **12**.	Replace the fuse. If the fuse is blown out again, check the power supply circuit.
12	**CHECK AIRBAG CONTROL MODULE CONNECTOR.** 1) Turn the ignition switch to OFF, disconnect the battery ground cable, and wait for 60 seconds or more. 2) Confirm that the connectors of airbag control module (AB6, AB17, AB18) are securely connected.	Is the connector of the airbag control module securely connected?	Go to step **13**.	Connect the connector of the airbag control module.

	Step	Check	Yes	No
13	**CHECK HARNESS BETWEEN AIRBAG CONTROL MODULE AND DATA LINK CONNECTOR.** 1) Disconnect the connectors (AB17, AB6, and AB18) from airbag control module. 2) Connect the connector (1AG) in the test harness AG to the connectors (AB6, AB17, and AB18). NOTE: For sedan models, connect test harness AH between the connectors (AB6, AB17, AB18) and (1AG). 3) Measure the resistance between connector (4AG) in the test harness AG and the data link connector. ***Connector & terminal*** ***(4AG) No. 1 — (B40) No. 7:***	Is the resistance less than 10 Ω?	Go to step **14**.	Repair the harness between the airbag control module and the data link connector. Or replace the airbag main harness along with the bulkhead harness.
14	**CHECK POWER SUPPLY CIRCUIT.** 1) Turn the ignition switch to ON. 2) Measure the voltage between connector (2AG) in the test harness AG and chassis ground. ***Connector & terminal*** ***(2AG) No. 1 (+) — Chassis ground (–):***	Is the voltage 10 V or more?	Go to step **15**.	Repair the harness between the airbag control module and the battery. Or replace the airbag main harness along with the bulkhead harness.
15	**CHECK BETWEEN AIRBAG CONTROL MODULE AND CHASSIS GROUND.** 1) Turn the ignition switch to OFF. 2) Measure the resistance between connector (2AG) in the test harness AG and chassis ground. ***Connector & terminal*** ***(2AG) No. 4 — Chassis ground:*** ***(2AG) No. 3 — Chassis ground:***	Is the resistance less than 10 Ω?	Go to step **16**.	Repair the harness between the airbag control module and the chassis ground. Or replace the airbag main harness along with the bulkhead harness.
16	**CHECK POOR CONTACT OF CONNECTOR.**	Is there poor contact of the control module power supply, ground circuit and data link connector?	Repair the connector. (For airbag system connectors, do not repair but replace the entire harness.)	Replace the airbag control module. <Ref. to AB-64, REMOVAL, Airbag Control Module.>

8. Read Diagnostic Trouble Code (DTC)

A: OPERATION

For operation procedures, refer to the “PC application help for Subaru Select Monitor”.

NOTE:
For details concerning DTCs, refer to List of Diagnostic Trouble Codes (DTC). <Ref. to AB(diag)-38, List of Diagnostic Trouble Code (DTC).>

9. Inspection Mode

A: PROCEDURE

Recreate the circumstance by referring to the conditions described in the checklist.

10.Clear Memory Mode

A: OPERATION

For operation procedures, refer to the “PC application help for Subaru Select Monitor”.

NOTE:
Clear the DTC stored in the airbag control module after repairing the airbag system.

11.Display of Status Information

A: OPERATION

When seat belt buckle switch malfunction occurs, or when seat belt buckle switch is replaced, check operation status of each sensor.
1) On «Main Menu» display, select {Each System Check}.
2) On «System Selection Menu» display, select {Airbag System}.
3) On «Airbag System» display, select {Status Data}.
The following table is for support data.

Item	Display Contents
Seat position sensor LH	—*2
Seat position sensor RH	—*2
Seat belt buckle switch LH	—*6
Seat belt buckle switch RH	Fastened*3/Not fastened*4/Other*5/Initial Setting*1/—*6
Passenger's airbag control status	ON*7/OFF*8/Initial Setting*1

*1: Displayed when it is initial
*2: Seat position sensor not supported
*3: Seat belt fastened
*4: Seat belt not fastened
*5: Displayed when data other than belt fastened or not fastened, such as breakdown, is input
*6: Seat belt buckle switch not supported
*7: Passenger's airbag operating state
*8: Passenger's airbag non-operating state

NOTE:
For detailed operation procedures, refer to "PC application help for Subaru Select Monitor".

12. Airbag Warning Light Illumination Pattern

A: INSPECTION

Turn the ignition switch to ON, and confirm that the airbag warning light remains on for approx. 6 seconds then turns off afterwards.

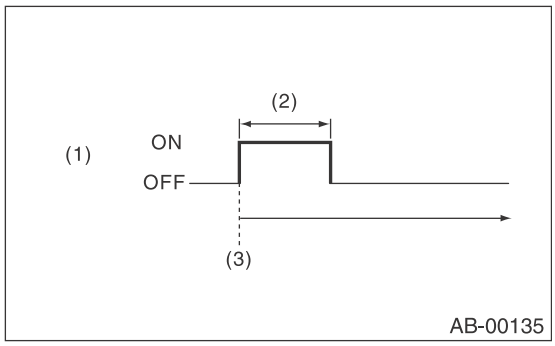

(1) Airbag warning light
(2) Approx. 6 sec.
(3) Ignition switch ON

13.Airbag Warning Light Failure

A: AIRBAG WARNING LIGHT REMAINS ON

DETECTING CONDITION:

- Airbag warning light is faulty.
- Airbag control module to airbag warning light circuit is shorted or open.
- Grounding circuit is faulty.
- Airbag control module is faulty.
- Connector connection is improper.
- Connection of (AB6, AB17, and AB18) to airbag control module is improper.

CAUTION:
Before performing diagnosis, refer to "CAUTION" in "General Description". <Ref. to AB(diag)-4, CAUTION, General Description.>
WIRING DIAGRAM:

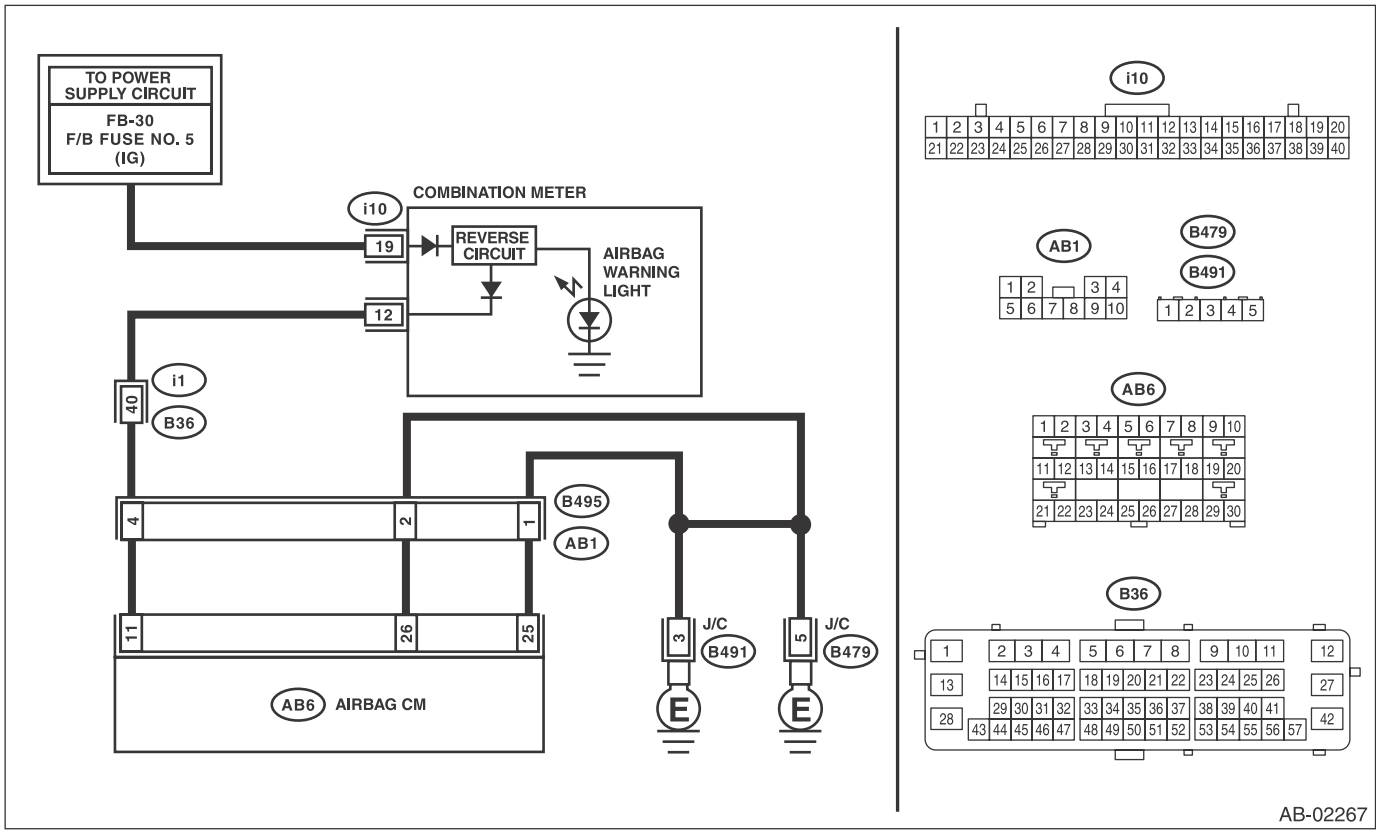

Step		Check	Yes	No
1	**READ DTC.** Read the DTC. <Ref. to AB(diag)-29, Read Diagnostic Trouble Code (DTC).>	Is DTC displayed?	Go to step **2**.	Go to step **3**.
2	**CHECK DTC.**	Is the displayed DTC 2D?	Go to step **3**.	Perform the diagnosis according to DTC.

	Step	Check	Yes	No
3	**CHECK FOR POOR CONTACT.** 1) Turn the ignition switch to OFF, disconnect the battery ground cable, and wait for 60 seconds or more. 2) Confirm that the connectors of airbag control module (AB6, AB17, and AB18) are securely connected.	Is there poor contact of connectors (AB6, AB17, and AB18)?	If the poor contact of the connector is not fixed, replace the airbag main harness along with body harness or replace the airbag control module. <Ref. to AB-64, Airbag Control Module.>	Go to step **4**.
4	**CHECK AIRBAG MAIN HARNESS.** 1) Remove the instrument panel lower cover and column cover, and disconnect the connectors (AB7) and (AB2). 2) Remove the console front panel and disconnect the connector (AB9). 3) Disconnect the connectors (AB6, AB17, and AB18) from the airbag control module, and connect the connector (1AG) in the test harness AG. NOTE: For sedan models, connect test harness AH between the connectors (AB6, AB17, AB18) and (1AG). 4) Connect the battery ground terminal and turn the ignition switch to ON. 5) Connect the connectors (7AG) and (8AG) in the test harness AG. NOTE: After the fault has been cleared, disconnect the connectors (7AG) and (8AG).	Does the airbag warning light go off?	Go to step **5**.	Go to step **6**.
5	**CHECK GROUND CIRCUIT.** Measure the resistance between connector (2AG) in the test harness AG and chassis ground. ***Connector & terminal*** ***(2AG) No. 4 — Chassis ground:*** ***(2AG) No. 3 — Chassis ground:***	Is the resistance less than 10 Ω?	Replace the airbag control module. <Ref. to AB-64, Airbag Control Module.>	Repair the chassis ground circuit.
6	**CHECK AIRBAG MAIN HARNESS AND BULKHEAD HARNESS.** 1) Disconnect the connectors (7AG) and (8AG). 2) Remove the combination meter. 3) Measure the resistance between the combination meter connector and test harness AG connector (2AG). ***Connector & terminal*** ***(2AG) No. 5 — (i10) No. 12:***	Is the resistance less than 10 Ω?	Check the combination meter.	Go to step **7**.
7	**CHECK POOR CONTACT OF CONNECTOR.** 1) Turn the ignition switch to OFF, disconnect the battery ground terminal, and wait 60 seconds or more. 2) Confirm that there is a firm contact between connectors (AB1) and (B495).	Is there poor contact of connector?	Repair the bulkhead harness or replace the airbag main harness along with bulkhead harness.	Go to step **8**.
8	**CHECK AIRBAG MAIN HARNESS.** Check the airbag main harness for defect.	Is there any defect in the airbag main harness?	Replace the airbag main harness along with bulkhead harness.	Repair the bulkhead harness.

B: AIRBAG WARNING LIGHT REMAINS OFF

DETECTING CONDITION:

- Fuse No. 5 (in fuse & relay box) is blown out.
- Body harness circuit is open.
- Airbag warning light is faulty.
- Airbag main harness is faulty.
- Airbag control module is faulty.

CAUTION:

Before performing diagnosis, refer to "CAUTION" in "General Description". <Ref. to AB(diag)-4, CAUTION, General Description.>

WIRING DIAGRAM:

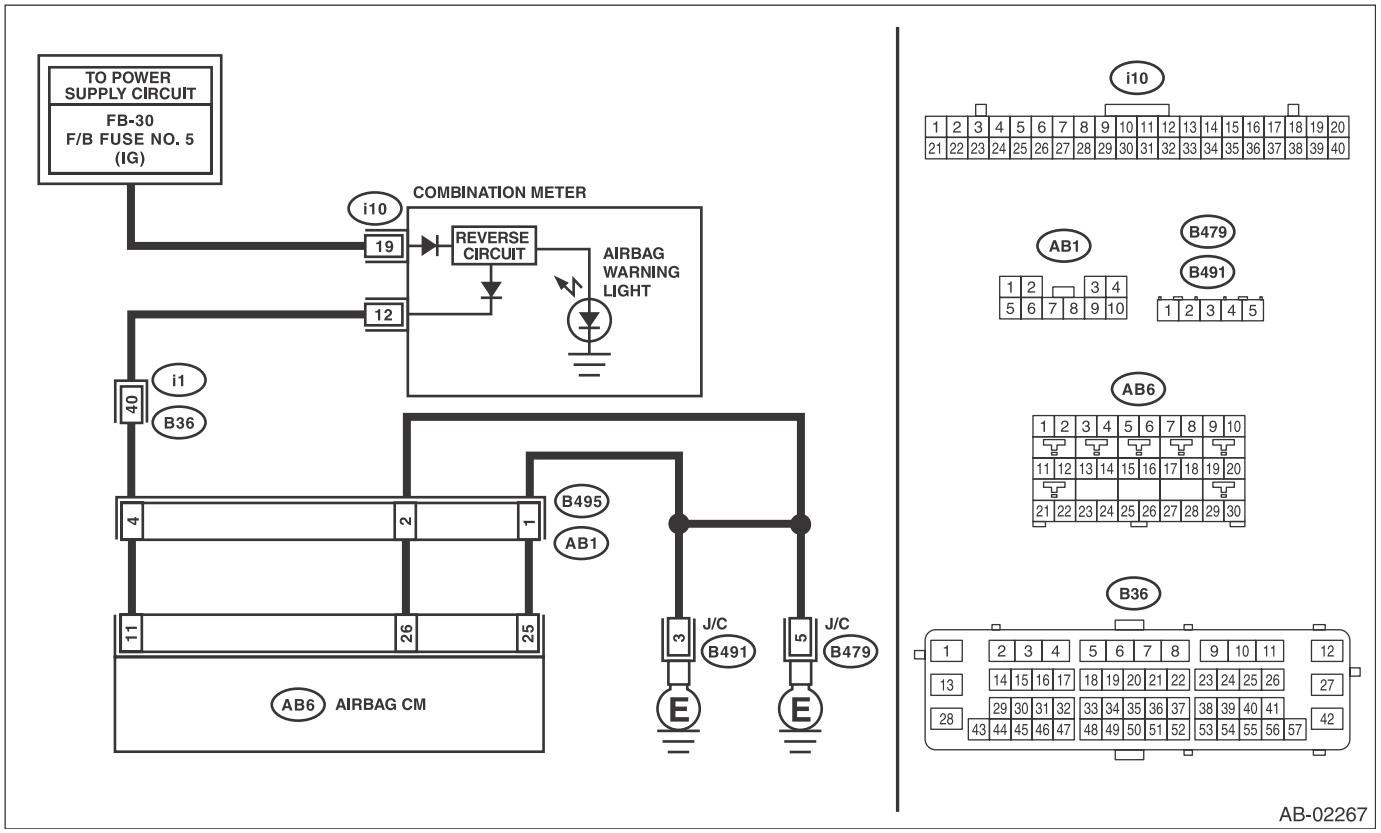

Step		Check	Yes	No
1	**CHECK COMBINATION METER.** Turn the ignition switch to ON, and confirm that warning lights of combination meter illuminate.	Do warning lights except for airbag illuminate?	Go to step **2**.	Check the combination meter.
2	**CHECK DTC.** Read the DTC. <Ref. to AB(diag)-29, Read Diagnostic Trouble Code (DTC).>	Is DTC displayed?	Perform the diagnosis according to DTC.	Go to step **3**.
3	**CHECK FUSE.** Remove fuse No. 5 from the fuse & relay box, and perform visual inspection.	Is the fuse OK?	Go to step **4**.	Replace the fuse. If the fuse is blown out again, go to step 4.
4	**CHECK AIRBAG WARNING LIGHT CIRCUIT (IN COMBINATION METER).** 1) Turn the ignition switch to OFF, disconnect the battery ground cable, and wait for 60 seconds or more. 2) Disconnect the connectors (i1) and (B36). 3) Connect the battery ground terminal and turn the ignition switch to ON.	Does airbag warning light illuminate?	Go to step **5**.	Check the combination meter and instrument panel harness.

	Step	Check	Yes	No
5	**CHECK AIRBAG MAIN HARNESS.** 1) Turn the ignition switch to OFF, disconnect the battery ground cable, and wait for 60 seconds or more. 2) Connect the connectors (i1) and (B36). 3) Disconnect the connectors (AB17, AB6, and AB18) from airbag control module. 4) Connect the battery ground terminal and turn the ignition switch to ON.	Does airbag warning light illuminate?	Replace the airbag control module. <Ref. to AB-64, Airbag Control Module.>	Replace the airbag main harness along with bulkhead harness.

14.List of Diagnostic Trouble Code (DTC)

A: LIST

DTC	Display	Content of diagnosis	Reference
11	Driver's Airbag failure	• Airbag main harness circuit is shorted to ground. • Airbag module harness (driver's side) circuit is shorted to ground. • Roll connector circuit is shorted to ground. • Driver's airbag module is faulty. • Airbag control module is faulty.	<Ref. to AB(diag)-46, DTC 11 DRIVER'S AIRBAG FAILURE, Diagnostic Chart with Trouble Code.>
12	Passenger's Airbag failure	• Airbag main harness circuit is shorted to ground. • Airbag module harness (passenger's side) circuit is shorted to ground. • Passenger's airbag module is faulty. • Airbag control module is faulty.	<Ref. to AB(diag)-48, DTC 12 PASSENGER'S AIRBAG FAILURE, Diagnostic Chart with Trouble Code.>
15	Driver's Airbag failure	• Airbag main harness circuit is shorted to power supply. • Airbag module harness circuit (driver's side) is shorted to power supply. • Roll connector circuit is shorted to power supply. • Driver's airbag module is faulty. • Airbag control module is faulty.	<Ref. to AB(diag)-50, DTC 15 DRIVER'S AIRBAG FAILURE, Diagnostic Chart with Trouble Code.>
16	Passenger's Airbag failure	• Airbag main harness circuit is shorted to power supply. • Airbag module harness (passenger's side) circuit is shorted to power supply. • Passenger's airbag module is faulty. • Airbag control module is faulty.	<Ref. to AB(diag)-52, DTC 16 PASSENGER'S AIRBAG FAILURE, Diagnostic Chart with Trouble Code.>
1A	Driver's Airbag failure	• Airbag main harness circuit is shorted. • Airbag module harness (driver's side) circuit is shorted. • Roll connector circuit is shorted. • Driver's airbag module is faulty. • Airbag control module is faulty.	<Ref. to AB(diag)-54, DTC 1A DRIVER'S AIRBAG FAILURE, Diagnostic Chart with Trouble Code.>
1B	Passenger's Airbag failure	• Airbag main harness circuit is shorted. • Airbag module harness circuit (passenger's side) is shorted. • Passenger's airbag module is faulty. • Airbag control module is faulty.	<Ref. to AB(diag)-56, DTC 1B PASSENGER'S AIRBAG FAILURE, Diagnostic Chart with Trouble Code.>
1D	Driver's Airbag failure	• Airbag main harness circuit is open. • Airbag module harness circuit (driver's side) is open. • Roll connector circuit is open. • Driver's airbag module is faulty. • Airbag control module is faulty.	<Ref. to AB(diag)-58, DTC 1D DRIVER'S AIRBAG FAILURE, Diagnostic Chart with Trouble Code.>
1E	Passenger's Airbag failure	• Airbag main harness circuit is open. • Airbag module harness circuit (passenger's side) is open. • Passenger's airbag module is faulty. • Airbag control module is faulty.	<Ref. to AB(diag)-60, DTC 1E PASSENGER'S AIRBAG FAILURE, Diagnostic Chart with Trouble Code.>
21	Airbag ECU failure	Airbag control module is faulty.	<Ref. to AB(diag)-62, DTC 21 AIRBAG ECM FAILURE, Diagnostic Chart with Trouble Code.>

DTC	Display	Content of diagnosis	Reference
22	Front Airbag: Firing output	Front airbag module and seat belt pretensioner (LH/RH) are inflated.	<Ref. to AB(diag)-62, DTC 22 FRONT AIRBAG FIRING OUTPUT, Diagnostic Chart with Trouble Code.>
26	Passenger's Airbag Indicator Failure	• Passenger's airbag indicator is faulty. • Airbag control module is faulty. • Airbag main harness circuit is open, shorted or shorted to ground. • Body harness circuit is open.	<Ref. to AB(diag)-63, DTC 26 PASSENGER'S AIRBAG INDICATOR FAILURE, Diagnostic Chart with Trouble Code.>
27	ODS Communication Error	• Occupant detection control module communication is faulty. • Airbag rear harness circuit is open, shorted, shorted to ground or shorted to power supply. • Occupant detection harness is faulty. • Airbag control module is faulty. • Occupant detection system is faulty.	<Ref. to AB(diag)-65, DTC 27 ODS COMMUNICATION ERROR, Diagnostic Chart with Trouble Code.>
29	ODS Failure	• Occupant detection sensor is faulty. • Occupant detection control module is faulty. • Occupant detection harness is faulty. • Fuse is blown.	<Ref. to OD(diag)-19, DTC 29 ODS FAILURE, Diagnostic Procedure with Diagnostic Trouble Code (DTC).>
2A	ODS Calibration Error	• Occupant detection control module is faulty. • Calibration of occupant detection control module is initial setting or faulty.	<Ref. to AB(diag)-67, DTC 2A ODS CALIBRATION ERROR, Diagnostic Chart with Trouble Code.>
2B	ODS System Wrong Parts	• Specification of occupant detection control module is improper. • Occupant detection control module is faulty.	<Ref. to AB(diag)-67, DTC 2B ODS SYSTEM WRONG PARTS, Diagnostic Chart with Trouble Code.>
2D	Airbag Warning Indicator Failure	• Airbag warning light is faulty. • Open or short circuit in harness between airbag control module and airbag warning light. • Poor contact of airbag main harness and instrument panel harness. • Ground circuit is faulty. • Airbag control module is faulty.	<Ref. to AB(diag)-67, DTC 2D AIRBAG WARNING INDICATOR FAILURE, Diagnostic Chart with Trouble Code.>
33	Front Sub Sensor RH failure	Front sub sensor (RH) is faulty.	<Ref. to AB(diag)-67, DTC 33 FRONT SUB SENSOR RH FAILURE, Diagnostic Chart with Trouble Code.>
34	Front Sub Sensor LH failure	Front sub sensor (LH) is faulty.	<Ref. to AB(diag)-67, DTC 34 FRONT SUB SENSOR LH FAILURE, Diagnostic Chart with Trouble Code.>
37	Buckle Switch RH Failure	• Passenger's buckle switch circuit is open, shorted or shorted to ground. • Occupant detection system is faulty. • Occupant detection harness is faulty.	<Ref. to OD(diag)-21, DTC 37 BUCKLE SWITCH RH FAILURE, Diagnostic Procedure with Diagnostic Trouble Code (DTC).>

DTC	Display	Content of diagnosis	Reference
39	Seat Belt Warning Failure	• Airbag control module is faulty. • Body integrated unit is faulty. • Harness circuits between body integrated unit and airbag control module are open, shorted or shorted to ground.	<Ref. to AB(diag)-68, DTC 39 SEAT BELT WARNING FAILURE, Diagnostic Chart with Trouble Code.>
3A	Front Sub Sensor RH false installation	• Front sensor (RH) is misinstalled. • Airbag control module is faulty.	<Ref. to AB(diag)-70, DTC 3A FRONT SUB SENSOR RH FALSE INSTALLATION, Diagnostic Chart with Trouble Code.>
3B	Front Sub Sensor LH false installation	• Front sensor (LH) is misinstalled. • Airbag control module is faulty.	<Ref. to AB(diag)-70, DTC 3B FRONT SUB SENSOR LH FALSE INSTALLATION, Diagnostic Chart with Trouble Code.>
41	Side Airbag RH failure	• Side airbag harness (RH) circuit is shorted to ground. • Side airbag module (RH) is faulty. • Airbag control module is faulty.	<Ref. to AB(diag)-71, DTC 41 SIDE AIRBAG RH FAILURE, Diagnostic Chart with Trouble Code.>
42	Side Airbag LH failure	• Side airbag harness (LH) circuit is shorted to ground. • Side airbag module (LH) is faulty. • Airbag control module is faulty.	<Ref. to AB(diag)-73, DTC 42 SIDE AIRBAG LH FAILURE, Diagnostic Chart with Trouble Code.>
45	Side Airbag RH failure	• Side airbag harness (RH) circuit is shorted to power supply. • Side airbag module (RH) is faulty. • Airbag control module is faulty.	<Ref. to AB(diag)-75, DTC 45 SIDE AIRBAG RH FAILURE, Diagnostic Chart with Trouble Code.>
46	Side Airbag LH failure	• Side airbag harness (LH) circuit is shorted to power supply. • Side airbag module (LH) is faulty. • Airbag control module is faulty.	<Ref. to AB(diag)-77, DTC 46 SIDE AIRBAG LH FAILURE, Diagnostic Chart with Trouble Code.>
4A	Side Airbag RH failure	• Side airbag harness (RH) circuit is shorted. • Side airbag module (RH) is faulty. • Airbag control module is faulty.	<Ref. to AB(diag)-79, DTC 4A SIDE AIRBAG RH FAILURE, Diagnostic Chart with Trouble Code.>
4B	Side Airbag LH failure	• Side airbag harness (LH) circuit is shorted. • Side airbag module (LH) is faulty. • Airbag control module is faulty.	<Ref. to AB(diag)-81, DTC 4B SIDE AIRBAG LH FAILURE, Diagnostic Chart with Trouble Code.>
4D	Side Airbag RH failure	• Side airbag harness (RH) circuit is open. • Side airbag module (RH) is faulty. • Airbag control module is faulty.	<Ref. to AB(diag)-83, DTC 4D SIDE AIRBAG RH FAILURE, Diagnostic Chart with Trouble Code.>
4E	Side Airbag LH failure	• Side airbag harness (LH) circuit is open. • Side airbag module (LH) is faulty. • Airbag control module is faulty.	<Ref. to AB(diag)-85, DTC 4E SIDE AIRBAG LH FAILURE, Diagnostic Chart with Trouble Code.>

DTC	Display	Content of diagnosis	Reference
53	Side Airbag Sensor RH failure	Side airbag sensor (RH) is faulty.	<Ref. to AB(diag)-87, DTC 53 SIDE AIRBAG SENSOR RH FAILURE, Diagnostic Chart with Trouble Code.>
54	Side Airbag Sensor LH failure	Side airbag sensor (LH) is faulty.	<Ref. to AB(diag)-87, DTC 54 SIDE AIRBAG SENSOR LH FAILURE, Diagnostic Chart with Trouble Code.>
55	Side/Curtain Airbag: Firing output	• Side airbag module and curtain airbag module are deployed. • Curtain airbag module is deployed.	<Ref. to AB(diag)-87, DTC 55 SIDE CURTAIN AIRBAG FIRING OUTPUT, Diagnostic Chart with Trouble Code.>
58	Curtain Airbag Sensor RH failure	Curtain airbag sensor (RH) is faulty.	<Ref. to AB(diag)-87, DTC 58 CURTAIN AIRBAG SENSOR RH FAILURE, Diagnostic Chart with Trouble Code.>
59	Curtain Airbag Sensor LH failure	Curtain airbag sensor (LH) is faulty.	<Ref. to AB(diag)-87, DTC 59 CURTAIN AIRBAG SENSOR LH FAILURE, Diagnostic Chart with Trouble Code.>
5A	Side Airbag Sensor RH false installation	• Side airbag sensor (RH) is misinstalled. • Airbag control module is faulty.	<Ref. to AB(diag)-87, DTC 5A SIDE AIRBAG SENSOR RH FALSE INSTALLATION, Diagnostic Chart with Trouble Code.>
5B	Side Airbag Sensor LH false installation	• Side airbag sensor (LH) is misinstalled. • Airbag control module is faulty.	<Ref. to AB(diag)-88, DTC 5B SIDE AIRBAG SENSOR LH FALSE INSTALLATION, Diagnostic Chart with Trouble Code.>
5C	Curtain Airbag Sensor RH false installation	• Curtain airbag sensor (RH) is misinstalled. • Airbag control module is faulty.	<Ref. to AB(diag)-88, DTC 5C CURTAIN AIRBAG SENSOR RH FALSE INSTALLATION, Diagnostic Chart with Trouble Code.>
5D	Curtain Airbag Sensor LH false installation	• Curtain airbag sensor (LH) is misinstalled. • Airbag control module is faulty.	<Ref. to AB(diag)-88, DTC 5D CURTAIN AIRBAG SENSOR LH FALSE INSTALLATION, Diagnostic Chart with Trouble Code.>
61	Belt Pretensioner RH failure	• Seat belt pretensioner (RH) circuit is shorted to ground. • Pretensioner (RH) is faulty. • Pretensioner harness is shorted to ground. • Airbag control module is faulty.	<Ref. to AB(diag)-89, DTC 61 BELT PRETENSIONER RH FAILURE, Diagnostic Chart with Trouble Code.>
62	Belt Pretensioner LH failure	• Seat belt pretensioner (LH) circuit is shorted to ground. • Pretensioner (LH) is faulty. • Pretensioner harness is shorted to ground. • Airbag control module is faulty.	<Ref. to AB(diag)-91, DTC 62 BELT PRETENSIONER LH FAILURE, Diagnostic Chart with Trouble Code.>

DTC	Display	Content of diagnosis	Reference
65	Belt Pretensioner RH failure	• Seat belt pretensioner (RH) circuit is shorted to power supply. • Pretensioner (RH) is faulty. • Pretensioner harness is shorted to power supply. • Airbag control module is faulty.	<Ref. to AB(diag)-93, DTC 65 BELT PRETENSIONER RH FAILURE, Diagnostic Chart with Trouble Code.>
66	Belt Pretensioner LH failure	• Seat belt pretensioner (LH) circuit is shorted to power supply. • Pretensioner (LH) is faulty. • Pretensioner harness is shorted to power supply. • Airbag control module is faulty.	<Ref. to AB(diag)-95, DTC 66 BELT PRETENSIONER LH FAILURE, Diagnostic Chart with Trouble Code.>
6A	Belt Pretensioner RH failure	• Seat belt pretensioner (RH) circuit is shorted. • Pretensioner (RH) is faulty. • Pretensioner harness is shorted. • Airbag control module is faulty.	<Ref. to AB(diag)-97, DTC 6A BELT PRETENSIONER RH FAILURE, Diagnostic Chart with Trouble Code.>
6B	Belt Pretensioner LH failure	• Seat belt pretensioner (LH) circuit is shorted. • Pretensioner (LH) is faulty. • Pretensioner harness is shorted. • Airbag control module is faulty.	<Ref. to AB(diag)-99, DTC 6B BELT PRETENSIONER LH FAILURE, Diagnostic Chart with Trouble Code.>
6D	Belt Pretensioner RH failure	• Seat belt pretensioner (RH) circuit is open. • Pretensioner (RH) is faulty. • Pretensioner harness is open. • Airbag control module is faulty.	<Ref. to AB(diag)-101, DTC 6D BELT PRETENSIONER RH FAILURE, Diagnostic Chart with Trouble Code.>
6E	Belt Pretensioner LH failure	• Seat belt pretensioner (LH) circuit is open. • Pretensioner (LH) is faulty. • Pretensioner harness is open. • Airbag control module is faulty.	<Ref. to AB(diag)-103, DTC 6E BELT PRETENSIONER LH FAILURE, Diagnostic Chart with Trouble Code.>
71	Driver's Airbag failure	• Airbag main harness circuit is shorted to ground. • Airbag module harness (driver's side) circuit is shorted to ground. • Roll connector circuit is shorted to ground. • Driver's airbag module is faulty. • Airbag control module is faulty.	<Ref. to AB(diag)-105, DTC 71 DRIVER'S AIRBAG FAILURE, Diagnostic Chart with Trouble Code.>
72	Passenger's Airbag failure	• Airbag main harness circuit is shorted to ground. • Airbag module harness (passenger's side) circuit is shorted to ground. • Passenger's airbag module is faulty. • Airbag control module is faulty.	<Ref. to AB(diag)-107, DTC 72 PASSENGER'S AIRBAG FAILURE, Diagnostic Chart with Trouble Code.>
75	Driver's Airbag failure	• Airbag main harness circuit is shorted to power supply. • Airbag module harness circuit (driver's side) is shorted to power supply. • Roll connector circuit is shorted to power supply. • Driver's airbag module is faulty. • Airbag control module is faulty.	<Ref. to AB(diag)-109, DTC 75 DRIVER'S AIRBAG FAILURE, Diagnostic Chart with Trouble Code.>
76	Passenger's Airbag failure	• Airbag main harness circuit is shorted to power supply. • Airbag module harness (passenger's side) circuit is shorted to power supply. • Passenger's airbag module is faulty. • Airbag control module is faulty.	<Ref. to AB(diag)-111, DTC 76 PASSENGER'S AIRBAG FAILURE, Diagnostic Chart with Trouble Code.>

DTC	Display	Content of diagnosis	Reference
7A	Driver's Airbag failure	• Airbag main harness circuit is shorted. • Airbag module harness (driver's side) circuit is shorted. • Roll connector circuit is shorted to power supply. • Driver's airbag module is faulty. • Airbag control module is faulty.	<Ref. to AB(diag)-113, DTC 7A DRIVER'S AIRBAG FAILURE, Diagnostic Chart with Trouble Code.>
7B	Passenger's Airbag failure	• Airbag main harness circuit is shorted. • Airbag module harness circuit (passenger's side) is shorted. • Passenger's airbag module is faulty. • Airbag control module is faulty.	<Ref. to AB(diag)-115, DTC 7B PASSENGER'S AIRBAG FAILURE, Diagnostic Chart with Trouble Code.>
7D	Driver's Airbag failure	• Airbag main harness circuit is open. • Airbag module harness circuit (driver's side) is open. • Roll connector circuit is open. • Driver's airbag module is faulty. • Airbag control module is faulty.	<Ref. to AB(diag)-117, DTC 7D DRIVER'S AIRBAG FAILURE, Diagnostic Chart with Trouble Code.>
7E	Passenger's Airbag failure	• Airbag main harness circuit is open. • Airbag module harness circuit (passenger's side) is open. • Passenger's airbag module is faulty. • Airbag control module is faulty.	<Ref. to AB(diag)-119, DTC 7E PASSENGER'S AIRBAG FAILURE, Diagnostic Chart with Trouble Code.>
91	Curtain Airbag Module RH Failure	• Curtain airbag harness (RH) circuit is shorted to ground. • Curtain airbag module (RH) is faulty. • Airbag control module is faulty.	<Ref. to AB(diag)-121, DTC 91 CURTAIN AIRBAG MODULE RH FAILURE, Diagnostic Chart with Trouble Code.>
92	Curtain Airbag Module LH Failure	• Curtain airbag harness (LH) circuit is shorted to ground. • Curtain airbag module (LH) is faulty. • Airbag control module is faulty.	<Ref. to AB(diag)-123, DTC 92 CURTAIN AIRBAG MODULE LH FAILURE, Diagnostic Chart with Trouble Code.>
95	Curtain Airbag Module RH Failure	• Curtain airbag harness (RH) is shorted to power supply. • Curtain airbag module (RH) is faulty. • Airbag control module is faulty.	<Ref. to AB(diag)-125, DTC 95 CURTAIN AIRBAG MODULE RH FAILURE, Diagnostic Chart with Trouble Code.>
96	Curtain Airbag Module LH Failure	• Curtain airbag harness (LH) is shorted to power supply. • Curtain airbag module (LH) is faulty. • Airbag control module is faulty.	<Ref. to AB(diag)-127, DTC 96 CURTAIN AIRBAG MODULE LH FAILURE, Diagnostic Chart with Trouble Code.>
9A	Curtain Airbag Module RH Failure	• Curtain airbag harness (RH) circuit is shorted. • Curtain airbag module (RH) is faulty. • Airbag control module is faulty.	<Ref. to AB(diag)-129, DTC 9A CURTAIN AIRBAG MODULE RH FAILURE, Diagnostic Chart with Trouble Code.>
9B	Curtain Airbag Module LH Failure	• Curtain airbag harness (LH) circuit is shorted. • Curtain airbag module (LH) is faulty. • Airbag control module is faulty.	<Ref. to AB(diag)-131, DTC 9B CURTAIN AIRBAG MODULE LH FAILURE, Diagnostic Chart with Trouble Code.>
9D	Curtain Airbag Module RH Failure	• Curtain airbag harness (RH) circuit is open. • Curtain airbag module (RH) is faulty. • Airbag control module is faulty.	<Ref. to AB(diag)-133, DTC 9D CURTAIN AIRBAG MODULE RH FAILURE, Diagnostic Chart with Trouble Code.>

DTC	Display	Content of diagnosis	Reference
9E	Curtain Airbag Module LH Failure	• Curtain airbag harness (LH) circuit is open. • Curtain airbag module (LH) is faulty. • Airbag control module is faulty.	<Ref. to AB(diag)-135, DTC 9E CURTAIN AIRBAG MODULE LH FAILURE, Diagnostic Chart with Trouble Code.>
A1	Front Sensor Bus Communication error	• Open or short circuit in harness between airbag control module and front sub sensor. • Front sub sensor is faulty. • Airbag control module is faulty.	<Ref. to AB(diag)-137, DTC A1 FRONT SENSOR BUS COMMUNICATION ERROR, Diagnostic Chart with Trouble Code.>
BB	Roll Over: Firing Output	Curtain airbag module (LH/RH) and seat belt pretensioner (LH/RH) are deployed.	<Ref. to AB(diag)-139, DTC BB ROLL OVER:FIRING OUTPUT, Diagnostic Chart with Trouble Code.>
E3 E4	Front Sensor Bus RH Communication error	• Open or short circuit in harness (RH) between airbag control module and front sub sensor. • Front sub sensor (RH) is faulty. • Airbag control module is faulty.	<Ref. to AB(diag)-139, DTC E3 FRONT SENSOR BUS RH COMMUNICATION ERROR, Diagnostic Chart with Trouble Code.> <Ref. to AB(diag)-139, DTC E4 FRONT SENSOR BUS RH COMMUNICATION ERROR, Diagnostic Chart with Trouble Code.>
E7 E8	Front Sensor Bus LH Communication error	• Open or short circuit in harness (LH) between airbag control module and front sub sensor. • Front sub sensor (LH) is faulty. • Airbag control module is faulty.	<Ref. to AB(diag)-140, DTC E7 FRONT SENSOR BUS LH COMMUNICATION ERROR, Diagnostic Chart with Trouble Code.> <Ref. to AB(diag)-142, DTC E8 FRONT SENSOR BUS LH COMMUNICATION ERROR, Diagnostic Chart with Trouble Code.>
E9	Side Sensor Bus RH Communication error	• Open or short circuit in harness (RH) between airbag control module and curtain airbag sensor. • Side airbag sensor (RH) is faulty. • Curtain airbag sensor (RH) is faulty. • Airbag control module is faulty.	<Ref. to AB(diag)-142, DTC E9 SIDE SENSOR BUS RH COMMUNICATION ERROR, Diagnostic Chart with Trouble Code.>
EB EC	Side Sensor Bus RH Communication error	• Open or short circuit in harness (RH) between airbag control module and side airbag sensor. • Side airbag sensor (RH) is faulty. • Airbag control module is faulty.	<Ref. to AB(diag)-142, DTC EB SIDE SENSOR BUS RH COMMUNICATION ERROR, Diagnostic Chart with Trouble Code.> <Ref. to AB(diag)-143, DTC EC SIDE SENSOR BUS RH COMMUNICATION ERROR, Diagnostic Chart with Trouble Code.>

DTC	Display	Content of diagnosis	Reference
ED EE	Side Sensor Bus RH Communication error	• Open or short circuit in harness (RH) between airbag control module and curtain airbag sensor. • Side airbag sensor (RH) is faulty. • Curtain airbag sensor (RH) is faulty. • Airbag control module is faulty.	<Ref. to AB(diag)-146, DTC ED SIDE SENSOR BUS RH COMMUNICATION ERROR, Diagnostic Chart with Trouble Code.> <Ref. to AB(diag)-147, DTC EE SIDE SENSOR BUS RH COMMUNICATION ERROR, Diagnostic Chart with Trouble Code.>
F1	Side Sensor Bus LH Communication error	• Open or short circuit in harness (LH) between airbag control module and curtain airbag sensor. • Side airbag sensor (LH) is faulty. • Curtain airbag sensor (LH) is faulty. • Airbag control module is faulty.	<Ref. to AB(diag)-150, DTC F1 SIDE SENSOR BUS LH COMMUNICATION ERROR, Diagnostic Chart with Trouble Code.>
F3 F4	Side Sensor Bus LH Communication error	• Open or short circuit in harness (LH) between airbag control module and side airbag sensor. • Side airbag sensor (LH) is faulty. • Airbag control module is faulty.	<Ref. to AB(diag)-150, DTC F3 SIDE SENSOR BUS LH COMMUNICATION ERROR, Diagnostic Chart with Trouble Code.> <Ref. to AB(diag)-151, DTC F4 SIDE SENSOR BUS LH COMMUNICATION ERROR, Diagnostic Chart with Trouble Code.>
F5 F6	Side Sensor Bus LH Communication error	• Open or short circuit in harness (LH) between airbag control module and curtain airbag sensor. • Side airbag sensor (LH) is faulty. • Curtain airbag sensor (LH) is faulty. • Airbag control module is faulty.	<Ref. to AB(diag)-154, DTC F5 SIDE SENSOR BUS LH COMMUNICATION ERROR, Diagnostic Chart with Trouble Code.> <Ref. to AB(diag)-155, DTC F6 SIDE SENSOR BUS LH COMMUNICATION ERROR, Diagnostic Chart with Trouble Code.>

15.Diagnostic Chart with Trouble Code

A: DTC 11 DRIVER'S AIRBAG FAILURE

DTC DETECTING CONDITION:

- Airbag main harness circuit is shorted to ground.
- Airbag module harness (driver's side) circuit is shorted to ground.
- Roll connector circuit is shorted to ground.
- Driver's airbag module is faulty.
- Airbag control module is faulty.

CAUTION:
Before performing diagnosis, refer to "CAUTION" in "General Description". <Ref. to AB(diag)-4, CAUTION, General Description.>

NOTE:
Prior to starting work, prepare two airbag resistors (98299PA040).

WIRING DIAGRAM:

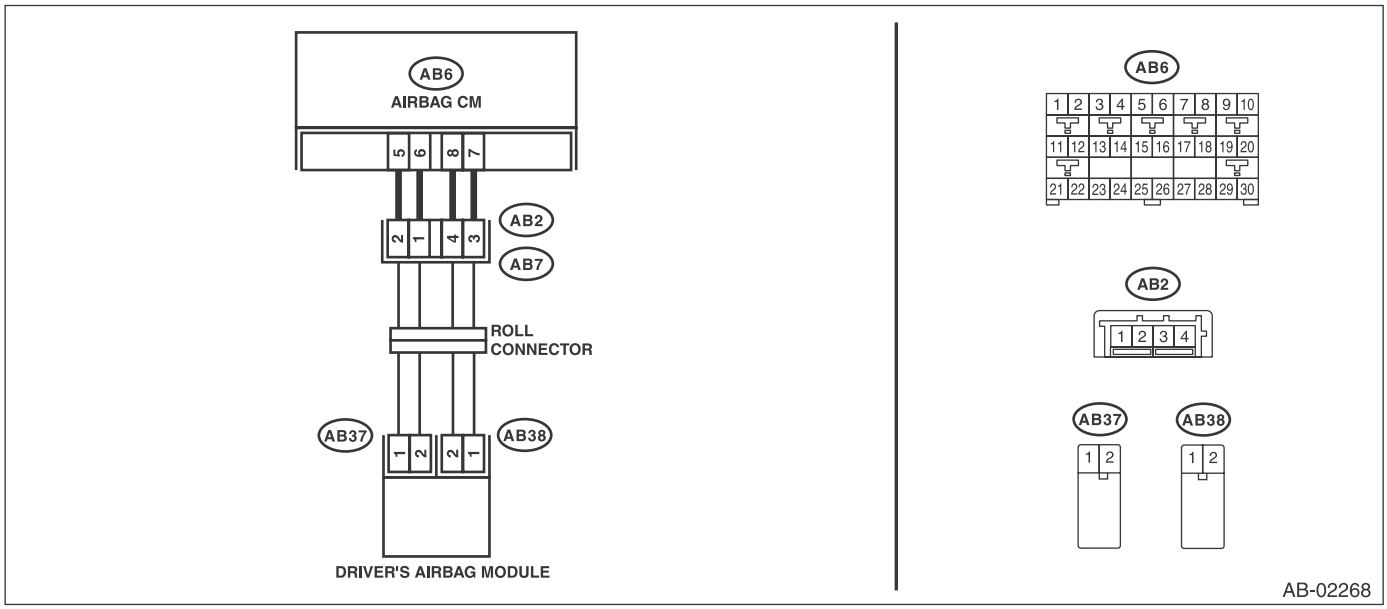

	Step	Check	Yes	No
1	**CHECK POOR CONTACT OF CONNECTORS.** Check for poor contact of the connectors between the airbag control module and the driver's airbag module.	Is there poor contact?	Replace the airbag harness.	Go to step **2**.
2	**CHECK DRIVER'S AIRBAG MODULE.** 1) Turn the ignition switch to OFF, disconnect the battery ground cable, and wait for 60 seconds or more. 2) Remove the driver's airbag module. 3) Connect the connector (1N) in the test harness N to the connector (AB38). 4) Connect the airbag resistor to the connector (2N) of test harness N. 5) Connect the connector (1Q) in the test harness Q to connector (AB37). 6) Connect the airbag resistor to the connector (2Q) in the test harness Q. 7) Connect the battery ground terminal and turn the ignition switch to ON.	Does the airbag warning light illuminate for six seconds and go off?	Replace the driver's airbag module. <Ref. to AB-31, Driver's Airbag Module.>	Go to step **3**.

	Step	Check	Yes	No
3	**CHECK ROLL CONNECTOR.** 1) Turn the ignition switch to OFF, disconnect the battery ground cable, and wait for 60 seconds or more. 2) Remove the instrument panel lower cover and column cover, and disconnect the connector (AB7) from (AB2). 3) Disconnect the airbag resistor from the connector (2N) in test harness N and from the connector (2Q) in test harness Q. 4) Measure the resistance between connector (2Q) in the test harness Q and chassis ground. ***Connector & terminal*** ***(2Q) No. 1 — Chassis ground:*** ***(2Q) No. 2 — Chassis ground:***	Is the resistance 1 MΩ or more?	Go to step **4**.	Replace the roll connector. <Ref. to AB-89, Roll Connector.>
4	**CHECK AIRBAG MAIN HARNESS (DRIVER'S AIRBAG HARNESS).** 1) Disconnect the test harness N from connector (AB38). 2) Disconnect test harness Q from connector (AB37). 3) Remove the console front panel and disconnect the connector (AB9). 4) Disconnect the connectors (AB6, AB17, AB18) from the airbag control module, and connect the connector (1AG) in the test harness AG. NOTE: For sedan models, connect test harness AH between the connectors (AB6, AB17, AB18) and (1AG). 5) Measure the resistance between connector (3AG) in the test harness AG and chassis ground. ***Connector & terminal*** ***(3AG) No. 1 — Chassis ground:*** ***(3AG) No. 3 — Chassis ground:***	Is the resistance 1 MΩ or more?	Go to step **5**.	Replace the airbag main harness along with body harness.
5	**CHECK AIRBAG CONTROL MODULE.** 1) Connect all connectors. 2) Clear the memory. 3) Perform the Inspection Mode. 4) Read the DTC.	Is the same DTC displayed?	Replace the airbag control module. <Ref. to AB-64, Airbag Control Module.>	Go to step **6**.
6	**CHECK FOR ANY OTHER DTC ON DISPLAY.**	Is any other DTC displayed?	Check DTC using "List of Diagnostic Trouble Code (DTC)". <Ref. to AB(diag)-38, List of Diagnostic Trouble Code (DTC).>	Finish the diagnosis.

B: DTC 12 PASSENGER'S AIRBAG FAILURE

DTC DETECTING CONDITION:

- Airbag main harness circuit is shorted to ground.
- Airbag module harness (passenger's side) circuit is shorted to ground.
- Passenger's airbag module is faulty.
- Airbag control module is faulty.

CAUTION:
Before performing diagnosis, refer to "CAUTION" in "General Description". <Ref. to AB(diag)-4, CAUTION, General Description.>

NOTE:
Prior to starting work, prepare two airbag resistors (98299PA040).

WIRING DIAGRAM:

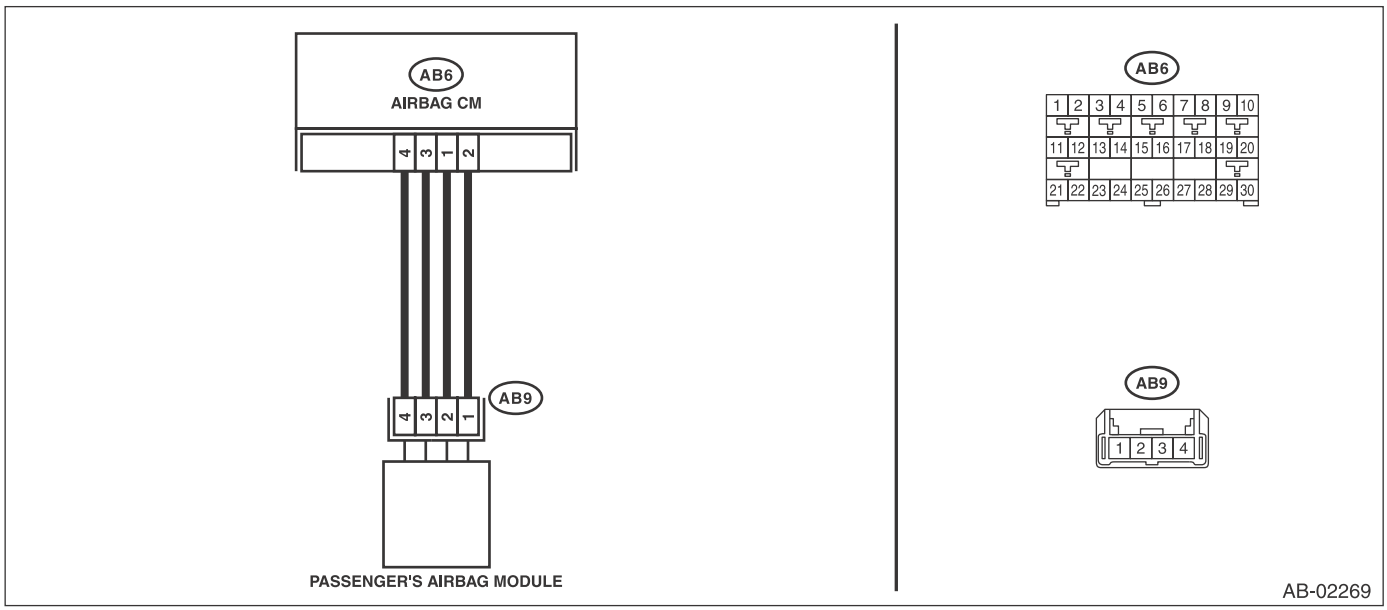

Step		Check	Yes	No
1	**CHECK POOR CONTACT OF CONNECTORS.** Check for poor contact of the connectors between the airbag control module and the passenger's airbag module.	Is there poor contact?	Replace the airbag harness.	Go to step **2**.
2	**CHECK PASSENGER'S AIRBAG MODULE.** 1) Turn the ignition switch to OFF, disconnect the battery ground cable, and wait for 60 seconds or more. 2) Remove the console front panel and disconnect (AB9). 3) Connect the connector (1P) in the test harness P to connector (AB9). 4) Connect the airbag resistor to the connectors (2P) and (3P) of test harness P. 5) Connect the battery ground terminal and turn the ignition switch to ON.	Does the airbag warning light illuminate for six seconds and go off?	Replace the passenger's airbag module. <Ref. to AB-33, Passenger's Airbag Module.>	Go to step **3**.

	Step	Check	Yes	No
3	**CHECK AIRBAG MAIN HARNESS (PASSENGER'S AIRBAG HARNESS).** 1) Turn the ignition switch to OFF, disconnect the battery ground cable, and wait for 60 seconds or more. 2) Disconnect the airbag resistor from the connectors (2P) and (3P) of test harness P. 3) Remove the instrument panel lower cover and column cover, and disconnect the connector (AB7) from (AB2). 4) Disconnect the connectors (AB6, AB17, and AB18) from the airbag control module, and connect the connector (1AG) in the test harness AG. NOTE: For sedan models, connect test harness AH between the connectors (AB6, AB17, AB18) and (1AG). 5) Measure the resistance between connector (3AG) in the test harness AG and chassis ground. ***Connector & terminal*** ***(3AG) No. 9 — Chassis ground:*** ***(3AG) No. 7 — Chassis ground:***	Is the resistance 1 MΩ or more?	Go to step **4**.	Replace the airbag main harness along with body harness.
4	**CHECK AIRBAG CONTROL MODULE.** 1) Connect all connectors. 2) Clear the memory. 3) Perform the Inspection Mode. 4) Read the DTC.	Is the same DTC displayed?	Replace the airbag control module. <Ref. to AB-64, Airbag Control Module.>	Go to step **5**.
5	**CHECK FOR ANY OTHER DTC ON DISPLAY.**	Is any other DTC displayed?	Check DTC using "List of Diagnostic Trouble Code (DTC)". <Ref. to AB(diag)-38, List of Diagnostic Trouble Code (DTC).>	Finish the diagnosis.

C: DTC 15 DRIVER'S AIRBAG FAILURE

DTC DETECTING CONDITION:

- Airbag main harness circuit is shorted to power supply.
- Airbag module harness (driver's side) circuit is shorted to power supply.
- Roll connector circuit is shorted to power supply.
- Driver's airbag module is faulty.
- Airbag control module is faulty.

CAUTION:

Before performing diagnosis, refer to "CAUTION" in "General Description". <Ref. to AB(diag)-4, CAUTION, General Description.>

NOTE:
Prior to starting work, prepare two airbag resistors (98299PA040).

WIRING DIAGRAM:

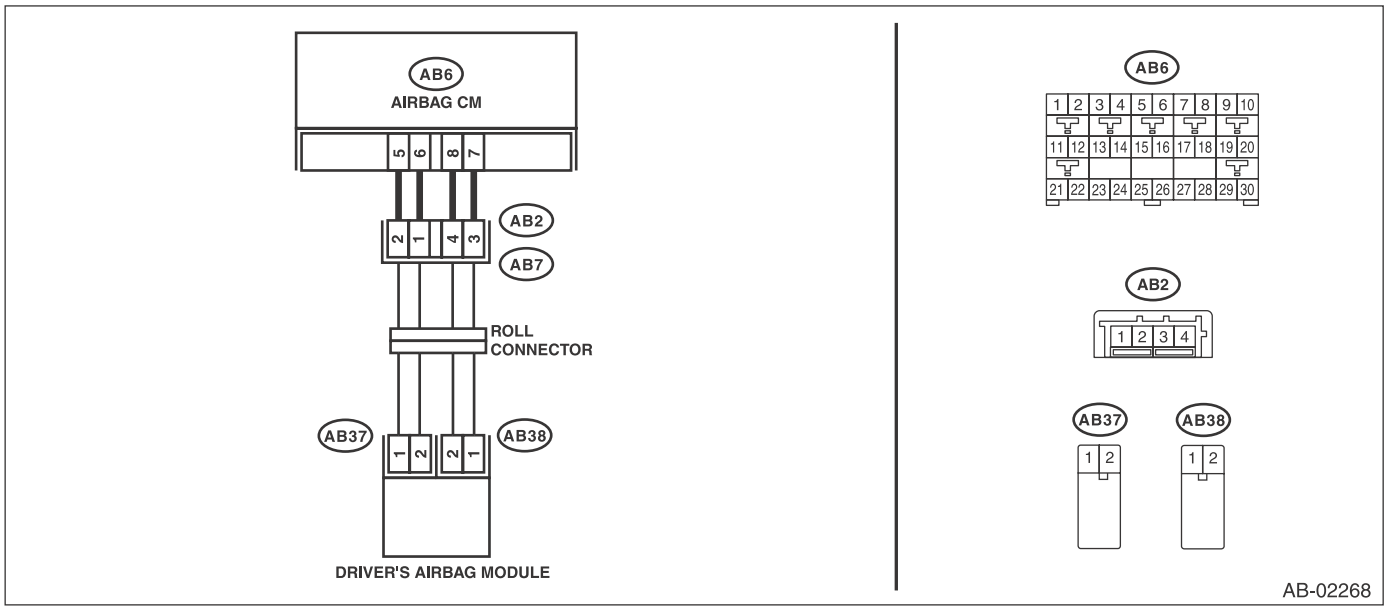

Step		Check	Yes	No
1	**CHECK POOR CONTACT OF CONNECTORS.** Check for poor contact of the connectors between the airbag control module and the driver's airbag module.	Is there poor contact?	Replace the airbag harness.	Go to step **2**.
2	**CHECK DRIVER'S AIRBAG MODULE.** 1) Turn the ignition switch to OFF, disconnect the battery ground cable, and wait for 60 seconds or more. 2) Remove the driver's airbag module. 3) Connect the connector (1N) in the test harness N to the connector (AB38). 4) Connect the airbag resistor to the connector (2N) of test harness N. 5) Connect the connector (1Q) in the test harness Q to connector (AB37). 6) Connect the airbag resistor to the connector (2Q) in the test harness Q. 7) Connect the battery ground terminal and turn the ignition switch to ON.	Does the airbag warning light illuminate for six seconds and go off?	Replace the driver's airbag module. <Ref. to AB-31, Driver's Airbag Module.>	Go to step **3**.

	Step	Check	Yes	No
3	**CHECK ROLL CONNECTOR.** 1) Turn the ignition switch to OFF, disconnect the battery ground cable, and wait for 60 seconds or more. 2) Remove the instrument panel lower cover and column cover, and disconnect the connector (AB7) from (AB2). 3) Disconnect the airbag resistor from the connector (2N) in test harness N and from the connector (2Q) in test harness Q. 4) Measure the voltage between connector (2Q) in the test harness Q and chassis ground. ***Connector & terminal*** ***(2Q) No. 1 (+) — Chassis ground (–):*** ***(2Q) No. 2 (+) — Chassis ground (–):***	Is the voltage less than 1 V?	Go to step **4**.	Replace the roll connector. <Ref. to AB-89, Roll Connector.>
4	**CHECK AIRBAG MAIN HARNESS (DRIVER'S AIRBAG HARNESS).** 1) Disconnect the test harness N from connector (AB38). 2) Disconnect test harness Q from connector (AB37). 3) Remove the console front panel and disconnect the connector (AB9). 4) Disconnect the connectors (AB6, AB17, and AB18) from the airbag control module, and connect the connector (1AG) in the test harness AG. NOTE: For sedan models, connect test harness AH between the connectors (AB6, AB17, AB18) and (1AG). 5) Connect the battery ground terminal and turn the ignition switch to ON. (engine OFF) 6) Measure the voltage between connector (3AG) in the test harness AG and chassis ground. ***Connector & terminal*** ***(3AG) No. 1 (+) — Chassis ground (–):*** ***(3AG) No. 3 (+) — Chassis ground (–):***	Is the voltage less than 1 V?	Go to step **5**.	Replace the airbag main harness along with body harness.
5	**CHECK AIRBAG CONTROL MODULE.** 1) Connect all connectors. 2) Clear the memory. 3) Perform the Inspection Mode. 4) Read the DTC.	Is the same DTC displayed?	Replace the airbag control module. <Ref. to AB-64, Airbag Control Module.>	Go to step **6**.
6	**CHECK FOR ANY OTHER DTC ON DISPLAY.**	Is any other DTC displayed?	Check DTC using "List of Diagnostic Trouble Code (DTC)". <Ref. to AB(diag)-38, List of Diagnostic Trouble Code (DTC).>	Finish the diagnosis.

D: DTC 16 PASSENGER'S AIRBAG FAILURE

DTC DETECTING CONDITION:

- Airbag main harness circuit is shorted to power supply.
- Airbag module harness (passenger's side) circuit is shorted to power supply.
- Passenger's airbag module is faulty.
- Airbag control module is faulty.

CAUTION:
Before performing diagnosis, refer to "CAUTION" in "General Description". <Ref. to AB(diag)-4, CAUTION, General Description.>

NOTE:
Prior to starting work, prepare two airbag resistors (98299PA040).

WIRING DIAGRAM:

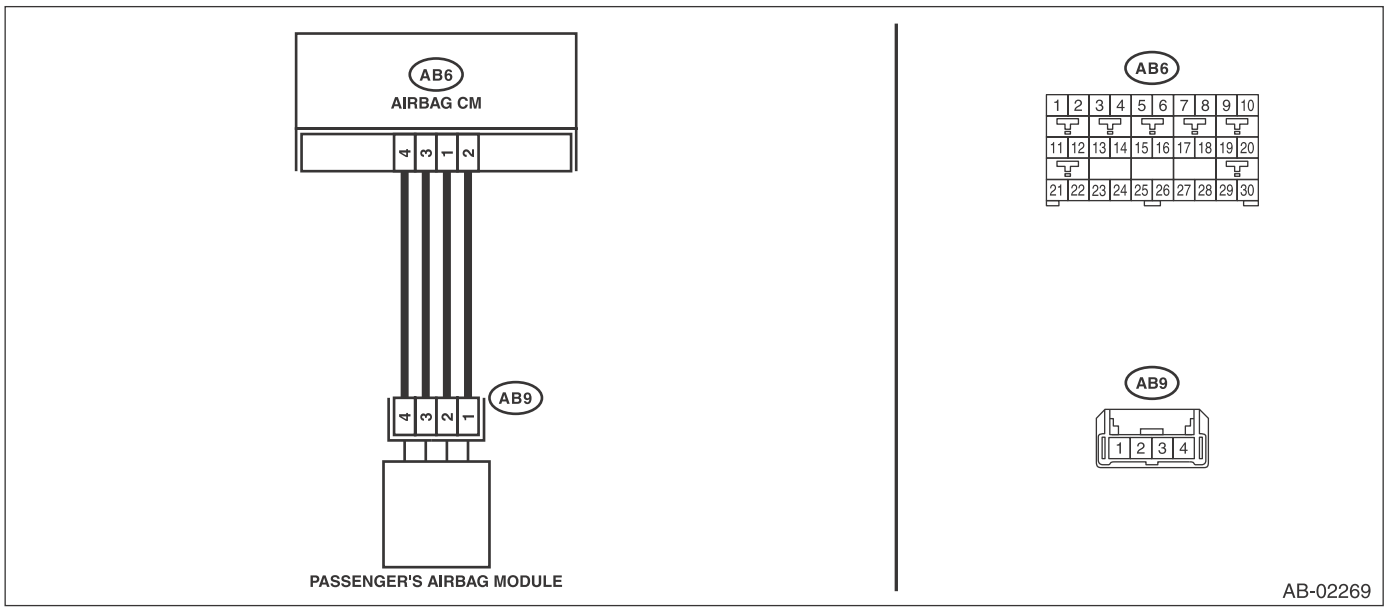

	Step	Check	Yes	No
1	**CHECK POOR CONTACT OF CONNECTORS.** Check for poor contact of the connectors between the airbag control module and the passenger's airbag module.	Is there poor contact?	Replace the airbag harness along with chassis harness.	Go to step **2**.
2	**CHECK PASSENGER'S AIRBAG MODULE.** 1) Turn the ignition switch to OFF, disconnect the battery ground cable, and wait for 60 seconds or more. 2) Remove the console front panel and disconnect the connector (AB9). 3) Connect the connector (1P) in the test harness P to connector (AB9). 4) Connect the airbag resistor to the connectors (2P) and (3P) of test harness P. 5) Connect the battery ground terminal and turn the ignition switch to ON.	Does the airbag warning light illuminate for six seconds and go off?	Replace the passenger's airbag module. <Ref. to AB-33, Passenger's Airbag Module.>	Go to step **3**.

	Step	Check	Yes	No
3	**CHECK AIRBAG MAIN HARNESS (PASSENGER'S AIRBAG HARNESS).** 1) Turn the ignition switch to OFF, disconnect the battery ground cable, and wait for 60 seconds or more. 2) Disconnect the airbag resistor from the connectors (2P) and (3P) of test harness P. 3) Remove the instrument panel lower cover and column cover, and disconnect the connector (AB7) from (AB2). 4) Disconnect the connectors (AB6, AB17, and AB18) from the airbag control module, and connect the connector (1AG) in the test harness AG. NOTE: For sedan models, connect test harness AH between the connectors (AB6, AB17, AB18) and (1AG). 5) Connect the battery ground terminal and turn the ignition switch to ON. (engine OFF) 6) Measure the voltage between connector (3AG) in the test harness AG and chassis ground. ***Connector & terminal*** ***(3AG) No. 9 (+) — Chassis ground (–):*** ***(3AG) No. 7 (+) — Chassis ground (–):***	Is the voltage less than 1 V?	Go to step **4**.	Replace the airbag main harness along with body harness.
4	**CHECK AIRBAG CONTROL MODULE.** 1) Connect all connectors. 2) Clear the memory. 3) Perform the Inspection Mode. 4) Read the DTC.	Is the same DTC displayed?	Replace the airbag control module. <Ref. to AB-64, Airbag Control Module.>	Go to step **5**.
5	**CHECK FOR ANY OTHER DTC ON DISPLAY.**	Is any other DTC displayed?	Check DTC using "List of Diagnostic Trouble Code (DTC)". <Ref. to AB(diag)-38, List of Diagnostic Trouble Code (DTC).>	Finish the diagnosis.

E: DTC 1A DRIVER'S AIRBAG FAILURE

DTC DETECTING CONDITION:

- Airbag main harness circuit is shorted.
- Airbag module harness (driver's side) circuit is shorted.
- Roll connector circuit is shorted.
- Driver's airbag module is faulty.
- Airbag control module is faulty.

CAUTION:

Before performing diagnosis, refer to "CAUTION" in "General Description". <Ref. to AB(diag)-4, CAUTION, General Description.>

NOTE:

Prior to starting work, prepare two airbag resistors (98299PA040).

WIRING DIAGRAM:

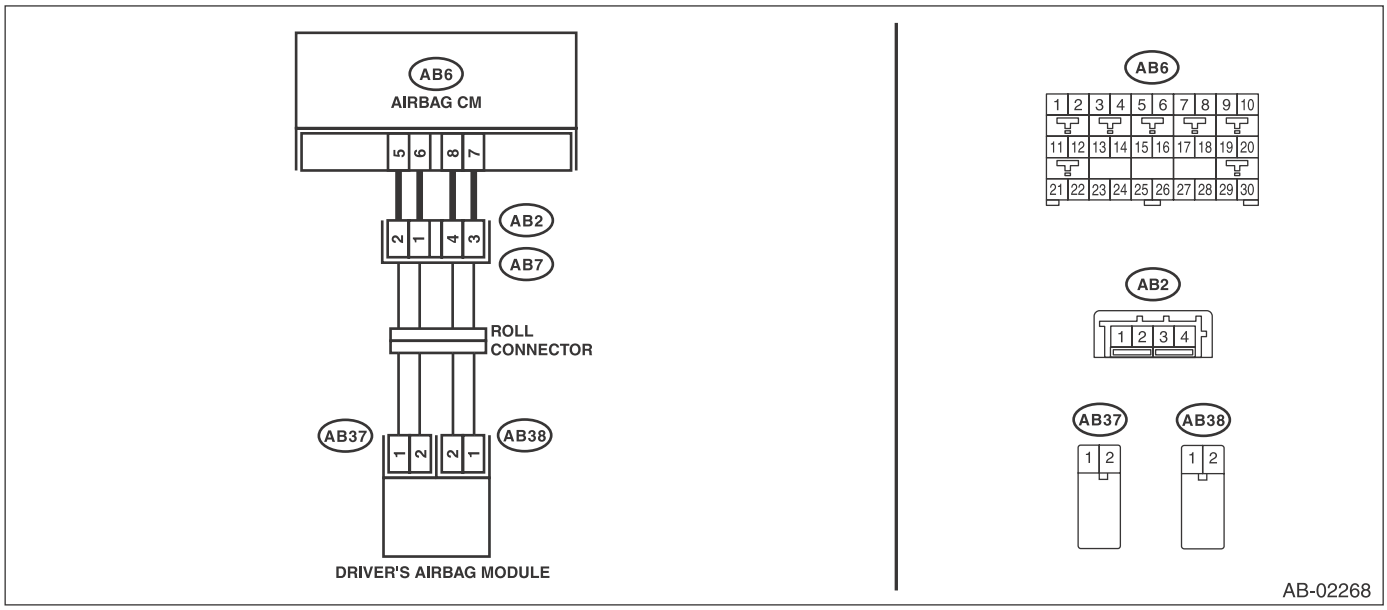

Step		Check	Yes	No
1	**CHECK POOR CONTACT OF CONNECTORS.** Check for poor contact of the connectors between the airbag control module and the driver's airbag module.	Is there poor contact?	Replace the airbag harness.	Go to step **2**.
2	**CHECK DRIVER'S AIRBAG MODULE.** 1) Turn the ignition switch to OFF, disconnect the battery ground cable, and wait for 60 seconds or more. 2) Remove the driver's airbag module. 3) Connect the connector (1N) in the test harness N to the connector (AB38). 4) Connect the airbag resistor to the connector (2N) of test harness N. 5) Connect the connector (1Q) in the test harness Q to connector (AB37). 6) Connect the airbag resistor to the connector (2Q) in the test harness Q. 7) Connect the battery ground terminal and turn the ignition switch to ON.	Does the airbag warning light illuminate for six seconds and go off?	Replace the driver's airbag module. <Ref. to AB-31, Driver's Airbag Module.>	Go to step **3**.

	Step	Check	Yes	No
3	**CHECK ROLL CONNECTOR AND AIRBAG MAIN HARNESS (DRIVER'S AIRBAG HARNESS).** 1) Turn the ignition switch to OFF, disconnect the battery ground cable, and wait for 60 seconds or more. 2) Remove the console front panel and disconnect the connector (AB9). 3) Disconnect the airbag resistor from the connector (2N) in test harness N and from the connector (2Q) in test harness Q. 4) Disconnect the connectors (AB6, AB17, and AB18) from the airbag control module, and connect the connector (1AG) in the test harness AG. NOTE: For sedan models, connect test harness AH between the connectors (AB6, AB17, AB18) and (1AG). 5) Measure the resistance between connector (2Q) terminals in test harness Q. ***Connector & terminal*** ***(2Q) No. 1 — (2Q) No. 2:***	Is the resistance 1 MΩ or more?	Go to step **5**.	Go to step **4**.
4	**CHECK AIRBAG MAIN HARNESS (DRIVER'S AIRBAG HARNESS).** 1) Remove the instrument panel lower cover and column cover, and disconnect the connector (AB7) from (AB2). 2) Measure the resistance between connector (3AG) terminals in test harness AG. ***Connector & terminal*** ***(3AG) No. 1 — (3AG) No. 3:***	Is the resistance 1 MΩ or more?	Replace the roll connector. <Ref. to AB-89, Roll Connector.>	Replace the airbag main harness along with body harness.
5	**CHECK AIRBAG CONTROL MODULE.** 1) Connect all connectors. 2) Clear the memory. 3) Perform the Inspection Mode. 4) Read the DTC.	Is the same DTC displayed?	Replace the airbag control module. <Ref. to AB-64, Airbag Control Module.>	Go to step **6**.
6	**CHECK FOR ANY OTHER DTC ON DISPLAY.**	Is any other DTC displayed?	Check DTC using "List of Diagnostic Trouble Code (DTC)". <Ref. to AB(diag)-38, List of Diagnostic Trouble Code (DTC).>	Finish the diagnosis.

F: DTC 1B PASSENGER'S AIRBAG FAILURE

DTC DETECTING CONDITION:

- Airbag main harness circuit is shorted.
- Airbag module harness circuit (passenger's side) is shorted.
- Roll connector circuit is shorted.
- Passenger's airbag module is faulty.
- Airbag control module is faulty.

CAUTION:

Before performing diagnosis, refer to "CAUTION" in "General Description". <Ref. to AB(diag)-4, CAUTION, General Description.>

NOTE:

Prior to starting work, prepare two airbag resistors (98299PA040).

WIRING DIAGRAM:

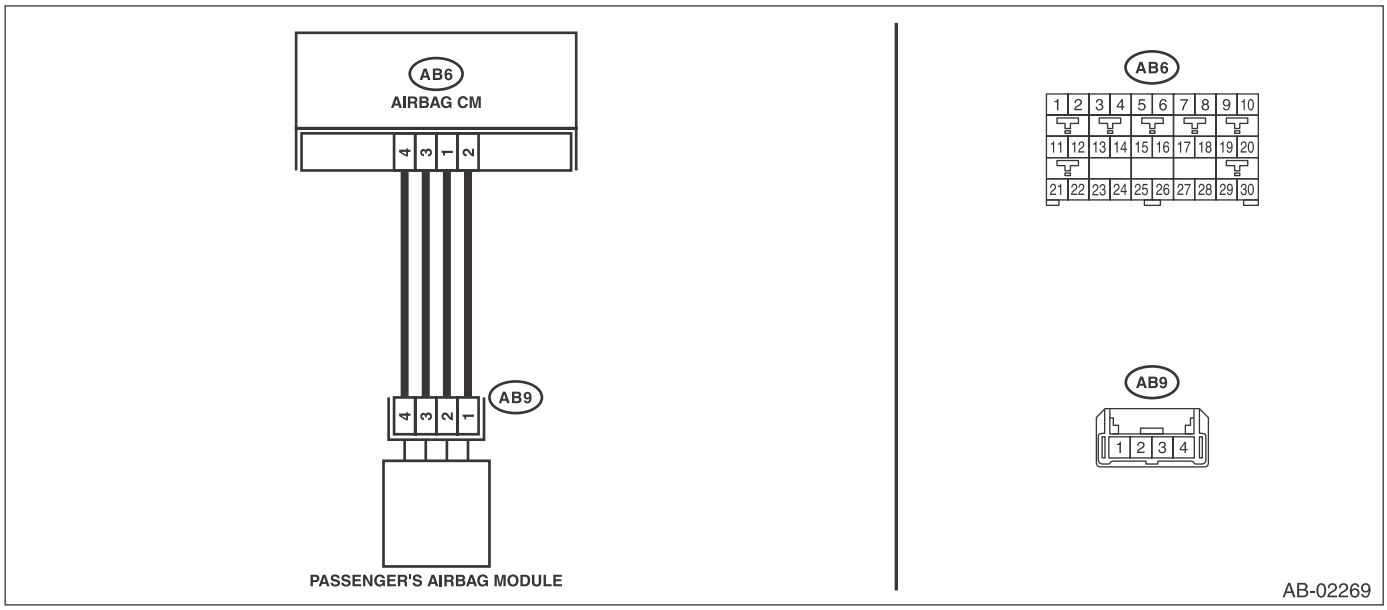

	Step	Check	Yes	No
1	**CHECK POOR CONTACT OF CONNECTORS.** Check for poor contact of the connectors between the airbag control module and the passenger's airbag module.	Is there poor contact?	Replace the airbag harness.	Go to step **2**.
2	**CHECK PASSENGER'S AIRBAG MODULE.** 1) Turn the ignition switch to OFF, disconnect the battery ground cable, and wait for 60 seconds or more. 2) Remove the console front panel and disconnect the connector (AB9). 3) Connect the connector (1P) in the test harness P to connector (AB9). 4) Connect the airbag resistor to the connectors (2P) and (3P) of test harness P. 5) Connect the battery ground terminal and turn the ignition switch to ON.	Does the airbag warning light illuminate for six seconds and go off?	Replace the passenger's airbag module. <Ref. to AB-33, Passenger's Airbag Module.>	Go to step **3**.

	Step	Check	Yes	No
3	**CHECK AIRBAG MAIN HARNESS (PASSENGER'S AIRBAG HARNESS).** 1) Turn the ignition switch to OFF, disconnect the battery ground cable, and wait for 60 seconds or more. 2) Disconnect the airbag resistor from the connectors (2P) and (3P) of test harness P. 3) Remove the instrument panel lower cover and column cover, and disconnect the connector (AB7) from (AB2). 4) Disconnect the connectors (AB6, AB17, and AB18) from the airbag control module, and connect the connector (1AG) in the test harness AG. NOTE: For sedan models, connect test harness AH between the connectors (AB6, AB17, AB18) and (1AG). 5) Measure the resistance between connector (3AG) terminals in test harness AG. ***Connector & terminal*** ***(3AG) No. 7 — (3AG) No. 9:***	Is the resistance 1 MΩ or more?	Go to step **4**.	Replace the airbag main harness along with body harness.
4	**CHECK AIRBAG CONTROL MODULE.** 1) Connect all connectors. 2) Clear the memory. 3) Perform the Inspection Mode. 4) Read the DTC.	Is the same DTC displayed?	Replace the airbag control module. <Ref. to AB-64, Airbag Control Module.>	Go to step **5**.
5	**CHECK FOR ANY OTHER DTC ON DISPLAY.**	Is any other DTC displayed?	Check DTC using "List of Diagnostic Trouble Code (DTC)". <Ref. to AB(diag)-38, List of Diagnostic Trouble Code (DTC).>	Finish the diagnosis.

G: DTC 1D DRIVER'S AIRBAG FAILURE

DTC DETECTING CONDITION:

- Airbag main harness circuit is open.
- Airbag module harness (driver's side) circuit is open.
- Roll connector is open.
- Driver's airbag module is faulty.
- Airbag control module is faulty.

CAUTION:

Before performing diagnosis, refer to "CAUTION" in "General Description". <Ref. to AB(diag)-4, CAUTION, General Description.>

NOTE:

Prior to starting work, prepare two airbag resistors (98299PA040).

WIRING DIAGRAM:

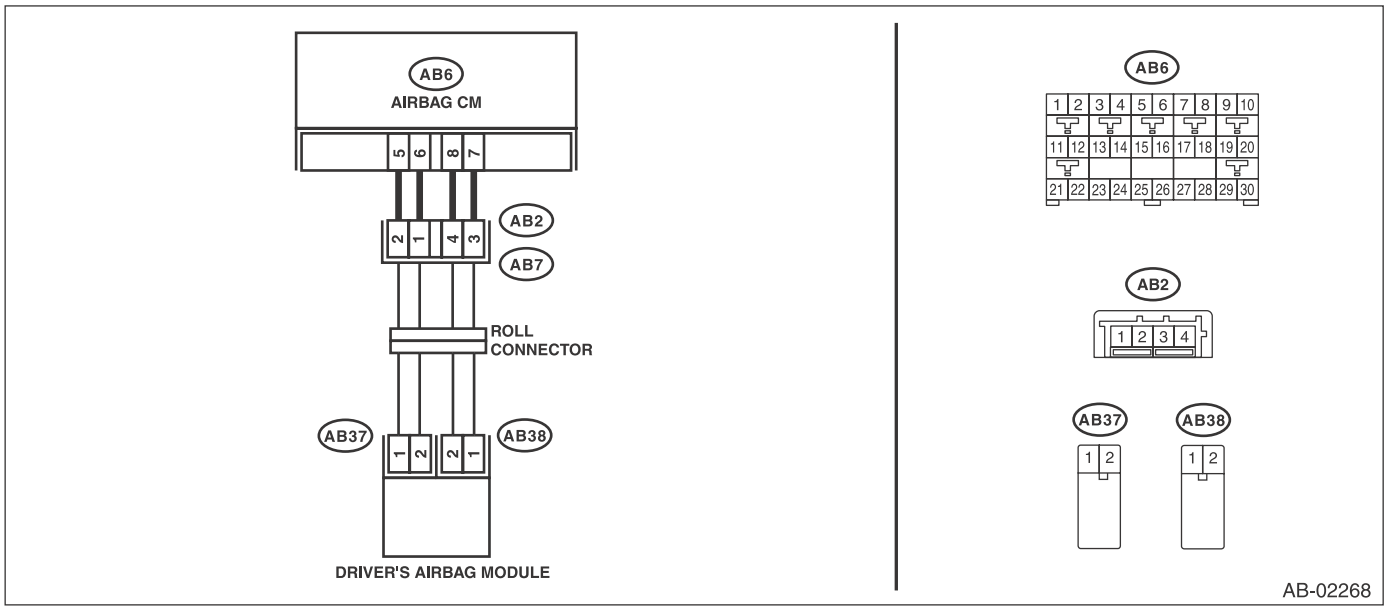

Step		Check	Yes	No
1	**CHECK POOR CONTACT OF CONNECTORS.** Check for poor contact of the connectors between the airbag control module and the driver's airbag module.	Is there poor contact?	Replace the airbag harness.	Go to step **2**.
2	**CHECK DRIVER'S AIRBAG MODULE.** 1) Turn the ignition switch to OFF, disconnect the battery ground cable, and wait for 60 seconds or more. 2) Remove the driver's airbag module. 3) Connect the connector (1N) in the test harness N to the connector (AB38). 4) Connect the airbag resistor to the connector (2N) of test harness N. 5) Connect the connector (1Q) in the test harness Q to connector (AB37). 6) Connect the airbag resistor to the connector (2Q) in the test harness Q. 7) Connect the battery ground terminal and turn the ignition switch to ON.	Does the airbag warning light illuminate for six seconds and go off?	Replace the driver's airbag module. <Ref. to AB-31, Driver's Airbag Module.>	Go to step **3**.

	Step	Check	Yes	No
3	**CHECK ROLL CONNECTOR AND AIRBAG MAIN HARNESS (DRIVER'S AIRBAG HARNESS).** 1) Turn the ignition switch to OFF, disconnect the battery ground cable, and wait for 60 seconds or more. 2) Remove the console front panel and disconnect the connector (AB9). 3) Disconnect the airbag resistor from the connector (2N) in test harness N. 4) Disconnect the airbag resistor from the connector (2Q) of test harness Q. 5) Disconnect the connectors (AB17, AB6, and AB18) from airbag control module. 6) Measure the resistance between connector (2Q) terminals in test harness Q. ***Connector & terminal*** ***(2Q) No. 1 — (2Q) No. 2:***	Is the resistance less than 10 Ω?	Go to step **5**.	Go to step **4**.
4	**CHECK ROLL CONNECTOR.** 1) Remove the instrument panel lower cover and column cover, and disconnect the connector (AB7) from (AB2). 2) Measure the resistance between connector (2Q) terminals in test harness Q. ***Connector & terminal*** ***(2Q) No. 1 — (2Q) No. 2:***	Is the resistance less than 10 Ω?	Replace the airbag main harness along with body harness.	Replace the roll connector. <Ref. to AB-89, Roll Connector.>
5	**CHECK AIRBAG CONTROL MODULE.** 1) Connect all connectors. 2) Clear the memory. 3) Perform the Inspection Mode. 4) Read the DTC.	Is the same DTC displayed?	Replace the airbag control module. <Ref. to AB-64, Airbag Control Module.>	Go to step **6**.
6	**CHECK FOR ANY OTHER DTC ON DISPLAY.**	Is any other DTC displayed?	Check DTC using "List of Diagnostic Trouble Code (DTC)". <Ref. to AB(diag)-38, List of Diagnostic Trouble Code (DTC).>	Finish the diagnosis.

H: DTC 1E PASSENGER'S AIRBAG FAILURE

DTC DETECTING CONDITION:

- Airbag main harness circuit is open.
- Airbag module harness (passenger's side) circuit is open.
- Roll connector circuit is shorted.
- Passenger's airbag module is faulty.
- Airbag control module is faulty.

CAUTION:

Before performing diagnosis, refer to "CAUTION" in "General Description". <Ref. to AB(diag)-4, CAUTION, General Description.>

NOTE:

Prior to starting work, prepare two airbag resistors (98299PA040).

WIRING DIAGRAM:

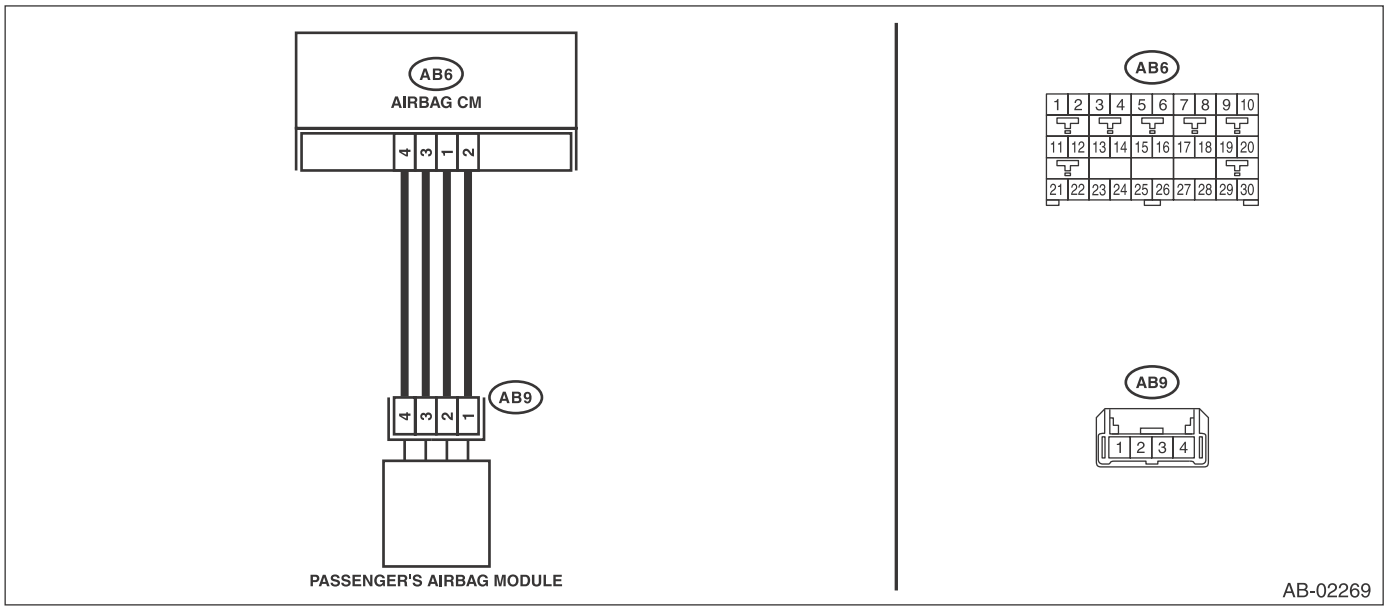

Step		Check	Yes	No
1	**CHECK POOR CONTACT OF CONNECTORS.** Check for poor contact of the connectors between the airbag control module and the passenger's airbag module.	Is there poor contact?	Replace the airbag harness.	Go to step **2**.
2	**CHECK PASSENGER'S AIRBAG MODULE.** 1) Turn the ignition switch to OFF, disconnect the battery ground cable, and wait for 60 seconds or more. 2) Remove the console front panel and disconnect the connector (AB9). 3) Connect the connector (1P) in the test harness P to connector (AB9). 4) Connect the airbag resistor to the connectors (2P) and (3P) of test harness P. 5) Connect the battery ground terminal and turn the ignition switch to ON.	Does the airbag warning light illuminate for six seconds and go off?	Replace the passenger's airbag module. <Ref. to AB-33, Passenger's Airbag Module.>	Go to step **3**.

	Step	Check	Yes	No
3	**CHECK AIRBAG MAIN HARNESS (PASSENGER'S AIRBAG HARNESS).** 1) Turn the ignition switch to OFF, disconnect the battery ground cable, and wait for 60 seconds or more. 2) Disconnect the airbag resistor from the connectors (2P) and (3P) of test harness P. 3) Remove the instrument panel lower cover and column cover, and disconnect the connector (AB7) from (AB2). 4) Disconnect the connectors (AB6, AB17, and AB18) from the airbag control module, and connect the connector (1AG) in the test harness AG. NOTE: For sedan models, connect test harness AH between the connectors (AB6, AB17, AB18) and (1AG). 5) Measure the resistance between connector (3AG) of test harness AG and connector (2P) of test harness P. ***Connector & terminal*** ***(3AG) No. 9 — (2P) No. 1:*** ***(3AG) No. 7 — (2P) No. 2:***	Is the resistance less than 10 Ω?	Go to step **4**.	Replace the airbag main harness along with body harness.
4	**CHECK AIRBAG CONTROL MODULE.** 1) Connect all connectors. 2) Clear the memory. 3) Perform the Inspection Mode. 4) Read the DTC.	Is the same DTC displayed?	Replace the airbag control module. <Ref. to AB-64, Airbag Control Module.>	Go to step **5**.
5	**CHECK FOR ANY OTHER DTC ON DISPLAY.**	Is any other DTC displayed?	Check DTC using "List of Diagnostic Trouble Code (DTC)". <Ref. to AB(diag)-38, List of Diagnostic Trouble Code (DTC).>	Finish the diagnosis.

I: DTC 21 AIRBAG ECM FAILURE

DTC DETECTING CONDITION:
Airbag control module is faulty.

CAUTION:
Before performing diagnosis, refer to "CAUTION" in "General Description". <Ref. to AB(diag)-4, CAUTION, General Description.>

	Step	Check	Yes	No
1	**CHECK IF DTC 21 IS INDICATED.** Read the DTC. <Ref. to AB(diag)-29, Read Diagnostic Trouble Code (DTC).>	Does the Subaru Select Monitor display DTC21?	Replace the airbag control module. <Ref. to AB-64, Airbag Control Module.>	Perform the Clear Memory Mode. <Ref. to AB(diag)-31, Clear Memory Mode.>

J: DTC 22 FRONT AIRBAG FIRING OUTPUT

DTC DETECTING CONDITION:
This DTC is indicated when the front airbag module and the pretensioner are deployed.
Once this DTC is displayed, the memory cannot be cleared. Therefore replace the following parts.

- Airbag control module <Ref. to AB-64, Airbag Control Module.>
- Driver's airbag module <Ref. to AB-31, Driver's Airbag Module.>
- Passenger's airbag module <Ref. to AB-33, Passenger's Airbag Module.>
- Front sub sensor of both sides <Ref. to AB-67, Front Sub Sensor.>
- Front outer seat belt with pretensioner of both sides <Ref. to SB-17, Front Seat Belt.>
- Steering roll connector <Ref. to AB-89, Roll Connector.>
- Occupant detection system (passenger's seat cushion & frame assembly) <Ref. to SE-10, Front Seat.>

K: DTC 26 PASSENGER'S AIRBAG INDICATOR FAILURE

DTC DETECTING CONDITION:

- Passenger's airbag indicator is faulty.
- Airbag control module is faulty.
- Airbag main harness circuit is open or shorted.
- Body harness is open.

CAUTION:
Before performing diagnosis, refer to "CAUTION" in "General Description". <Ref. to AB(diag)-4, CAUTION, General Description.>
WIRING DIAGRAM:

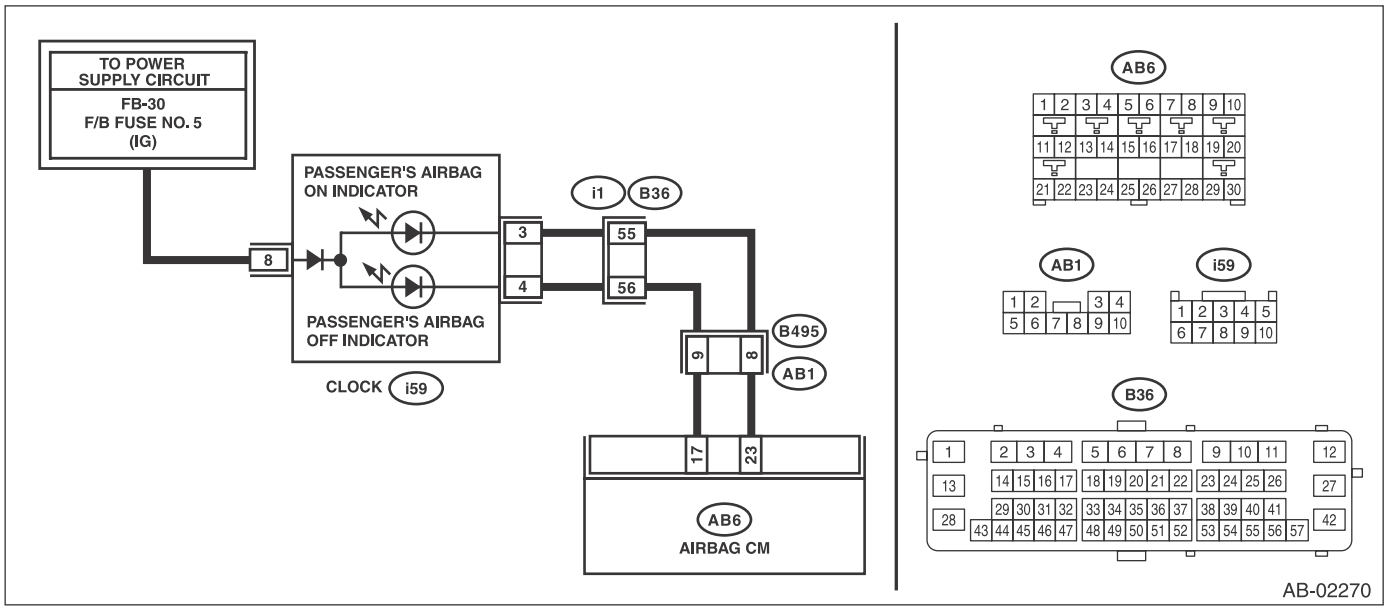

Step		Check	Yes	No
1	**CHECK FOR POOR CONTACT.** 1) Turn the ignition switch to OFF, disconnect the battery ground cable, and wait for 60 seconds or more. 2) Check that the connector between the airbag control module and the clock is securely connected.	Is there poor contact of connector?	Replace the airbag harness connector.	Go to step **2**.
2	**CHECK AIRBAG MAIN HARNESS.** 1) Disconnect the connectors (AB17, AB6, and AB18) from airbag control module. 2) Connect the battery ground terminal and turn the ignition switch to ON. NOTE: If the condition is normal, neither ON nor OFF illuminate.	Does the passenger's airbag indicator illuminate?	Go to step **3**.	Go to step **4**.

	Step	Check	Yes	No
3	**CHECK AIRBAG MAIN HARNESS.** 1) Turn the ignition switch to OFF. 2) Remove the clock, and disconnect the connector (i59). 3) Connect the connector (1AG) in the test harness AG to the connectors (AB6, AB17, and AB18). NOTE: For sedan models, connect test harness AH between the connectors (AB6, AB17, AB18) and (1AG). 4) Measure the resistance between connector (2AG) in the test harness AG and chassis ground, and between connector (2AG) terminals. ***Connector & terminal*** ***(2AG) No. 9 — (2AG) No. 8:*** ***(2AG) No. 9 — Chassis ground:*** ***(2AG) No. 8 — Chassis ground:***	Is the resistance 1 MΩ or more?	Replace the clock.	Repair the bulkhead harness. Or replace the airbag main harness along with the body harness.
4	**CHECK AIRBAG HARNESS.** 1) Connect the connectors (7AG) and (8AG) in the test harness AG. 2) Connect the battery ground terminal and turn the ignition switch to ON.	Does the passenger's airbag indicator illuminate?	Replace the airbag control module. <Ref. to AB-64, Airbag Control Module.>	Go to step **5**.
5	**CHECK AIRBAG HARNESS.** 1) Turn the ignition switch to OFF. 2) Disconnect the connectors (7AG) and (8AG) in the test harness AG. 3) Measure the resistance between connector (2AG) in the test harness AG and connector (i59). ***Connector & terminal*** ***(2AG) No. 9 — (i59) No. 4:*** ***(2AG) No. 8 — (i59) No. 3:***	Is the resistance less than 10 Ω?	Go to step **6**.	Repair the bulkhead harness. Or replace the airbag main harness along with the body harness.
6	**CHECK BODY HARNESS.** 1) Turn the ignition switch to ON. 2) Measure the voltage between connector (i59) and chassis ground. ***Connector & terminal*** ***(i59) No. 8 — Chassis ground:***	Is the voltage 10 V or more?	Replace the clock.	Check the power supply circuit of the clock.

L: DTC 27 ODS COMMUNICATION ERROR

DTC DETECTING CONDITION:

- Occupant detection control module communication is faulty.
- Airbag rear harness circuit is open, shorted, shorted to ground, or shorted to power supply.
- Occupant detection harness (seat harness) is faulty.
- Occupant detection system is faulty.
- Airbag control module is faulty.

CAUTION:

Before performing diagnosis, refer to "CAUTION" in "General Description". <Ref. to AB(diag)-4, CAUTION, General Description.>

WIRING DIAGRAM:

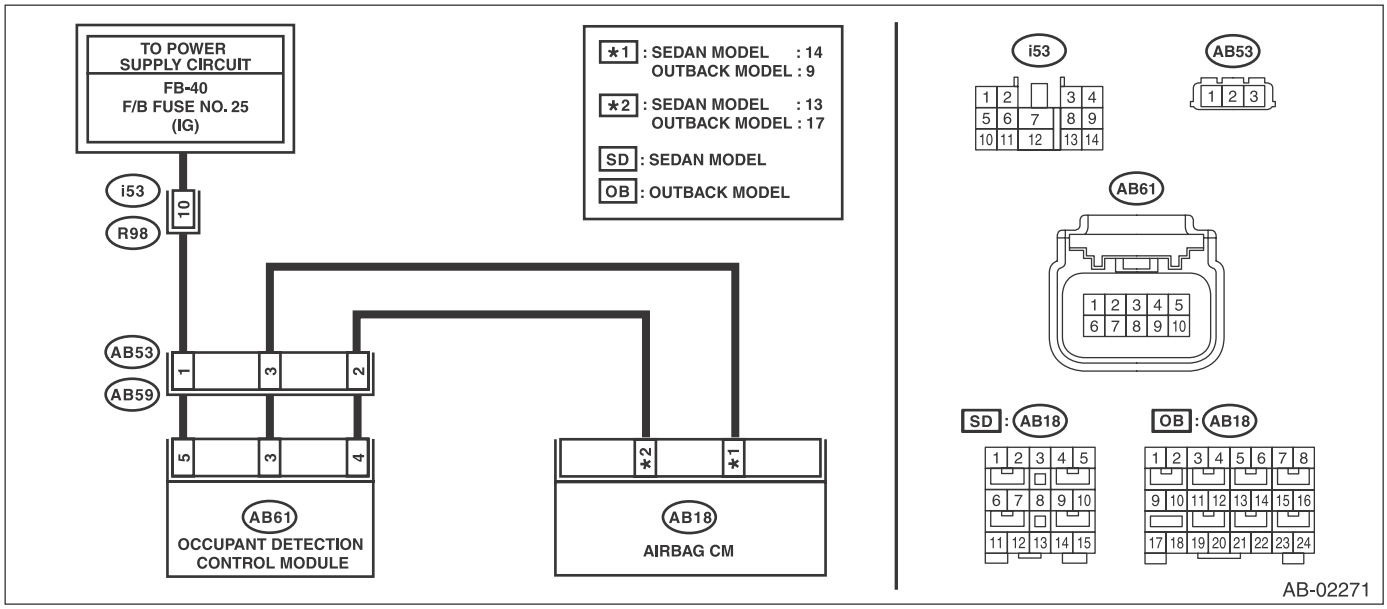

Step		Check	Yes	No
1	**CHECK POOR CONTACT OF CONNECTORS.** Check for poor contact of the connector between the airbag control module and the occupant detection control module.	Is there poor contact?	Reconnect the connector. If the fault is not fixed, replace the airbag rear harness along with body harness or replace the occupant detection harness (seat harness).	Go to step **2**.

	Step	Check	Yes	No
2	**CHECK AIRBAG HARNESS.** 1) Turn the ignition switch to OFF, disconnect the battery ground cable, and wait for 60 seconds or more. 2) Disconnect the connectors (AB17, AB6, and AB18) from airbag control module. 3) Disconnect connectors (AB59) and (AB53) below the passenger seat. 4) Connect the connector (1AG) in the test harness AG to the connectors (AB6, AB17, and AB18). NOTE: For sedan models, connect test harness AH between the connectors (AB6, AB17, AB18) and (1AG). 5) Connect the connector (1AD) in the test harness AD to the connector (AB53). 6) Measure the resistance between connector (6AG) or (5AG) in the test harness AG and connector (2AD) in the test harness AD. ***Connector & terminal*** ***Sedan model*** ***(5AG) No. 3 — (2AD) No. 2:*** ***(5AG) No. 8 — (2AD) No. 3:*** ***OUTBACK model*** ***(6AG) No. 10 — (2AD) No. 3:*** ***(6AG) No. 12 — (2AD) No. 2:***	Is the resistance less than 10 Ω?	Go to step **3**.	Replace the airbag rear harness along with body harness.
3	**CHECK AIRBAG HARNESS.** Measure the resistance between connector (2AD) in the test harness AD and chassis ground, and between connector (2AD) terminals. ***Connector & terminal*** ***(2AD) No. 2 — Chassis ground:*** ***(2AD) No. 3 — Chassis ground:*** ***(2AD) No. 2 — (2AD) No. 3:***	Is the resistance 1 MΩ or more?	Go to step **4**.	Replace the airbag rear harness along with body harness.
4	**CHECK AIRBAG HARNESS.** 1) Turn the ignition switch to ON. 2) Measure the voltage between connector (2AD) in the test harness AD and chassis ground. ***Connector & terminal*** ***(2AD) No. 1 — Chassis ground:***	Is the voltage 9 V or more?	Replace the occupant detection harness (seat harness). If the fault is not fixed, replace the occupant detection system (seat cushion & frame assembly) and airbag control module in this order.	Check the battery voltage and fuse. If there is no fault, replace the airbag rear harness along with body harness or replace the body harness.

M: DTC 29 ODS FAILURE

NOTE:
Refer to “Occupant Detection System” for details on DTC 29. <Ref. to OD(diag)-19, DTC 29 ODS FAILURE, Diagnostic Procedure with Diagnostic Trouble Code (DTC).>

N: DTC 2A ODS CALIBRATION ERROR

NOTE:
Refer to “Occupant Detection System” for details on DTC 2A. <Ref. to OD(diag)-20, DTC 2A ODS CALIBRATION ERROR, Diagnostic Procedure with Diagnostic Trouble Code (DTC).>

O: DTC 2B ODS SYSTEM WRONG PARTS

NOTE:
Refer to “Occupant Detection System” for details on DTC 2B. <Ref. to OD(diag)-20, DTC 2B ODS SYSTEM WRONG PARTS, Diagnostic Procedure with Diagnostic Trouble Code (DTC).>

P: DTC 2D AIRBAG WARNING INDICATOR FAILURE

DTC DETECTING CONDITION:

- Airbag warning light is faulty.
- Harness between airbag control module and airbag warning light is shorted or open.
- Connection of airbag main harness and instrument panel harness is improper.
- Grounding circuit is faulty.
- Airbag control module is faulty.

NOTE:
For the diagnostic procedure, refer to “Airbag Warning Light Failure”. <Ref. to AB(diag)-34, Airbag Warning Light Failure.>

Q: DTC 33 FRONT SUB SENSOR RH FAILURE

DTC DETECTING CONDITION:

Front sub sensor (RH) is faulty.
If DTC 33 is displayed, the circuit within the front sub sensor (RH) is faulty.
Replace the front sub sensor (RH). <Ref. to AB-67, Front Sub Sensor.>

R: DTC 34 FRONT SUB SENSOR LH FAILURE

DTC DETECTING CONDITION:

Front sub sensor (LH) is faulty.
If DTC 34 is displayed, the circuit within the front sub sensor (LH) is faulty.
Replace the front sub sensor (LH). <Ref. to AB-67, Front Sub Sensor.>

S: DTC 37 BUCKLE SWITCH RH FAILURE

NOTE:
Refer to “Occupant Detection System” for details on DTC 37. <Ref. to OD(diag)-21, DTC 37 BUCKLE SWITCH RH FAILURE, Diagnostic Procedure with Diagnostic Trouble Code (DTC).>

T: DTC 39 SEAT BELT WARNING FAILURE

DTC DETECTING CONDITION:

- Airbag control module is faulty.
- Body integrated unit is faulty.
- Harness circuit between the body integrated unit and airbag control module is open, shorted or shorted to ground.

CAUTION:
Before performing diagnosis, refer to "CAUTION" in "General Description". <Ref. to AB(diag)-4, CAUTION, General Description.>
WIRING DIAGRAM:

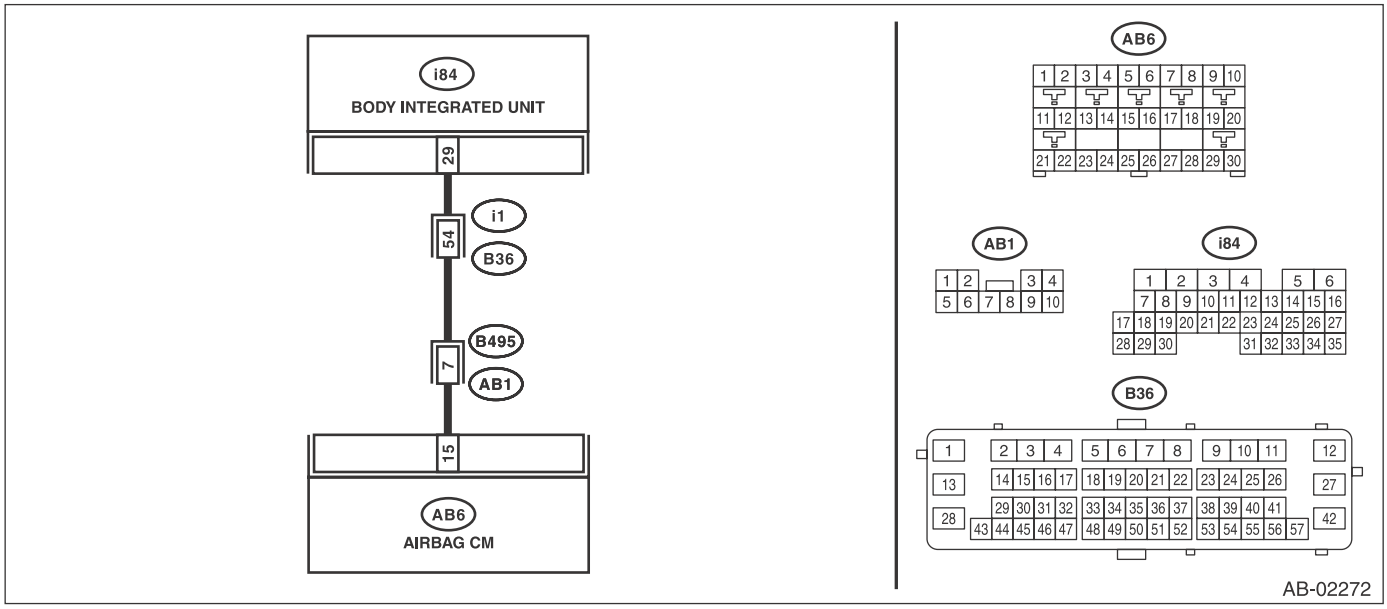

Step		Check	Yes	No
1	**CHECK AIRBAG HARNESS.** 1) Turn the ignition switch to OFF, disconnect the battery ground cable, and wait for 60 seconds or more. 2) Disconnect the connectors (AB17, AB6, and AB18) from airbag control module. 3) Connect the battery ground terminal and turn the ignition switch to ON.	Does the passenger's seat belt warning light blink for six seconds, and then go off?	Go to step **3**.	Go to step **2**.
2	**CHECK AIRBAG HARNESS.** 1) Turn the ignition switch to OFF. 2) Connect the connector (1AG) in the test harness AG to the connectors (AB6, AB17, and AB18). NOTE: For sedan models, connect test harness AH between the connectors (AB6, AB17, AB18) and (1AG). 3) Measure the resistance between connector (2AG) in the test harness AG and chassis ground. ***Connector & terminal*** ***(2AG) No. 10 — Chassis ground:***	Is the resistance 1 MΩ or more?	Replace the body integrated unit.	Repair the bulkhead harness and instrument panel harness. Or replace the airbag main harness along with the body harness.
3	**CHECK AIRBAG HARNESS.** 1) In the condition of step 2, connect the connectors (7AG) and (8AG) in the test harness AG. 2) Turn the ignition switch to ON.	Does the passenger's seat belt warning light blink for six seconds, and then repeat illuminating/blinking?	Replace the airbag control module. <Ref. to AB-64, Airbag Control Module.>	Go to step **4**.

	Step	Check	Yes	No
4	**CHECK AIRBAG HARNESS.** 1) In the condition of step 3, disconnect the connectors (7AG) and (8AG) in the test harness AG. 2) Measure the resistance between connector (2AG) in the test harness AG and connector (i84). ***Connector & terminal*** ***(2AG) No. 10 — (i84) No. 29:***	Is the resistance less than 10 Ω?	Replace the body integrated unit.	Repair the bulk-head harness and instrument panel harness. Or replace the airbag main harness along with the body harness.

U: DTC 3A FRONT SUB SENSOR RH FALSE INSTALLATION

DTC DETECTING CONDITION:

Front sub sensor (RH) is misinstalled.

Step		Check	Yes	No
1	**REPLACE FRONT SUB SENSOR.** 1) Turn the ignition switch to OFF, disconnect the battery ground cable, and wait for 60 seconds or more. 2) Replace the front sub sensor (RH) with a genuine sensor. <Ref. to AB-67, REMOVAL, Front Sub Sensor.>	Does the warning light go off?	Finish the diagnosis.	Replace the airbag control module. <Ref. to AB-64, REMOVAL, Airbag Control Module.>

V: DTC 3B FRONT SUB SENSOR LH FALSE INSTALLATION

DTC DETECTING CONDITION:

Front sub sensor (LH) is misinstalled.

Step		Check	Yes	No
1	**REPLACE FRONT SUB SENSOR.** 1) Turn the ignition switch to OFF, disconnect the battery ground cable, and wait for 60 seconds or more. 2) Replace the front sub sensor (LH) with a genuine sensor. <Ref. to AB-67, REMOVAL, Front Sub Sensor.>	Does the warning light go off?	Finish the diagnosis.	Replace the airbag control module. <Ref. to AB-64, REMOVAL, Airbag Control Module.>

W: DTC 41 SIDE AIRBAG RH FAILURE

DTC DETECTING CONDITION:

- Side airbag harness (RH) circuit is shorted to ground.
- Side airbag module (RH) is faulty.
- Airbag control module is faulty.

CAUTION:

Before performing diagnosis, refer to "CAUTION" in "General Description". <Ref. to AB(diag)-4, CAUTION, General Description.>

WIRING DIAGRAM:

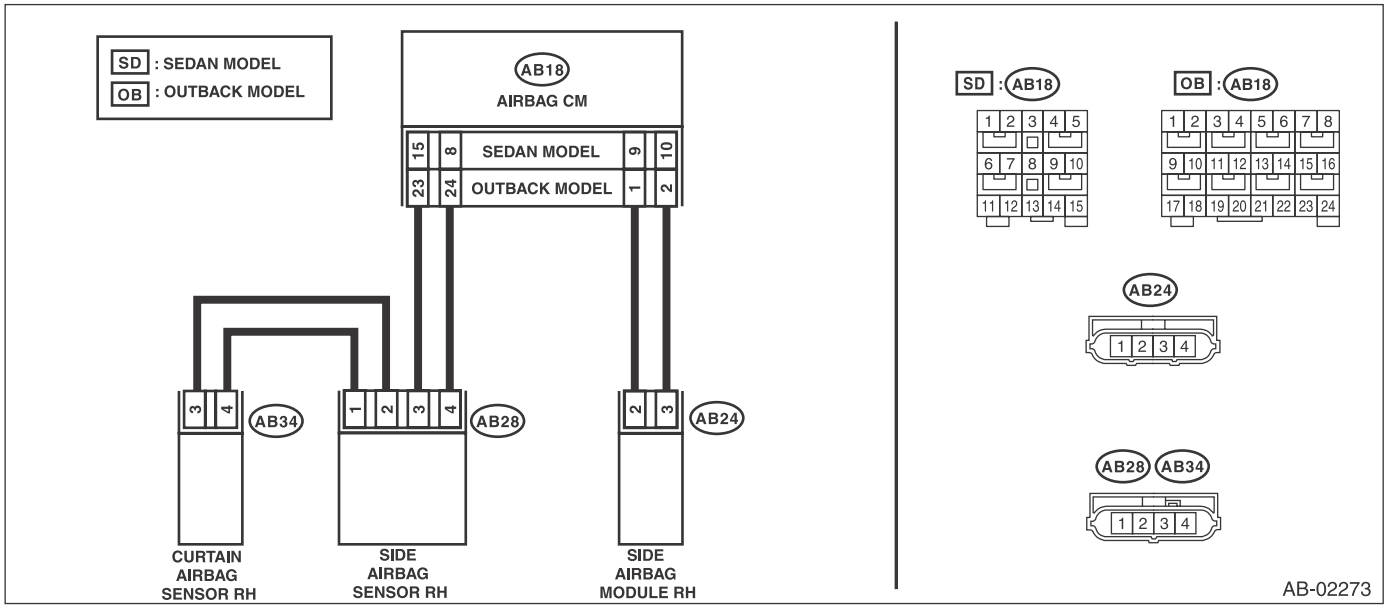

Step		Check	Yes	No
1	**CHECK POOR CONTACT OF CONNECTORS.** Check for poor contact of the connectors between the airbag control module, side airbag module RH and the side airbag sensor RH.	Is there poor contact?	Replace the airbag rear harness along with body harness.	Go to step **2**.
2	**CHECK SIDE AIRBAG MODULE.** 1) Turn the ignition switch to OFF, disconnect the battery ground cable, and wait for 60 seconds or more. 2) Disconnect the connector (AB24) from the side airbag module (RH), and connect the connector (1AJ) in the test harness AJ to connector (AB24). 3) Connect the airbag resistor to the test harness AJ connector (3AJ). 4) Connect the battery ground terminal and turn the ignition switch to ON.	Does the airbag warning light illuminate for six seconds and go off?	Replace the side airbag module (RH). <Ref. to AB-51, REMOVAL, Side Airbag Module.>	Go to step **3**.

	Step	Check	Yes	No
3	**CHECK AIRBAG REAR HARNESS (SIDE AIRBAG MODULE HARNESS RH).** 1) Turn the ignition switch to OFF, disconnect the battery ground cable, and wait for 60 seconds or more. 2) Disconnect the connector (AB26) from seat belt pretensioner (RH). 3) Disconnect the connector (AB33) from curtain airbag module (RH). 4) Disconnect the airbag resistor from test harness AJ. 5) Disconnect the connectors (AB17, AB6, and AB18) from airbag control module. 6) Connect the connector (1AG) in the test harness AG to the connectors (AB6, AB17, and AB18). NOTE: For sedan models, connect test harness AH between the connectors (AB6, AB17, AB18) and (1AG). 7) Measure the resistance between connector (3AJ) in the test harness AJ and chassis ground. ***Connector & terminal*** ***(3AJ) No. 1 — Chassis ground:*** ***(3AJ) No. 2 — Chassis ground:***	Is the resistance 1 MΩ or more?	Go to step **4**.	Replace the airbag rear harness along with body harness.
4	**CHECK AIRBAG CONTROL MODULE.** 1) Connect all connectors. 2) Clear the memory. 3) Perform the Inspection Mode. 4) Read the DTC.	Is the same DTC displayed?	Replace the airbag control module. <Ref. to AB-64, Airbag Control Module.>	Go to step **5**.
5	**CHECK FOR ANY OTHER DTC ON DISPLAY.**	Is any other DTC displayed?	Check DTC using "List of Diagnostic Trouble Code (DTC)". <Ref. to AB(diag)-38, List of Diagnostic Trouble Code (DTC).>	Finish the diagnosis.

X: DTC 42 SIDE AIRBAG LH FAILURE

DTC DETECTING CONDITION:

- Side airbag harness (LH) circuit is shorted to ground.
- Side airbag module (LH) is faulty.
- Airbag control module is faulty.

CAUTION:

Before performing diagnosis, refer to "CAUTION" in "General Description". <Ref. to AB(diag)-4, CAUTION, General Description.>

WIRING DIAGRAM:

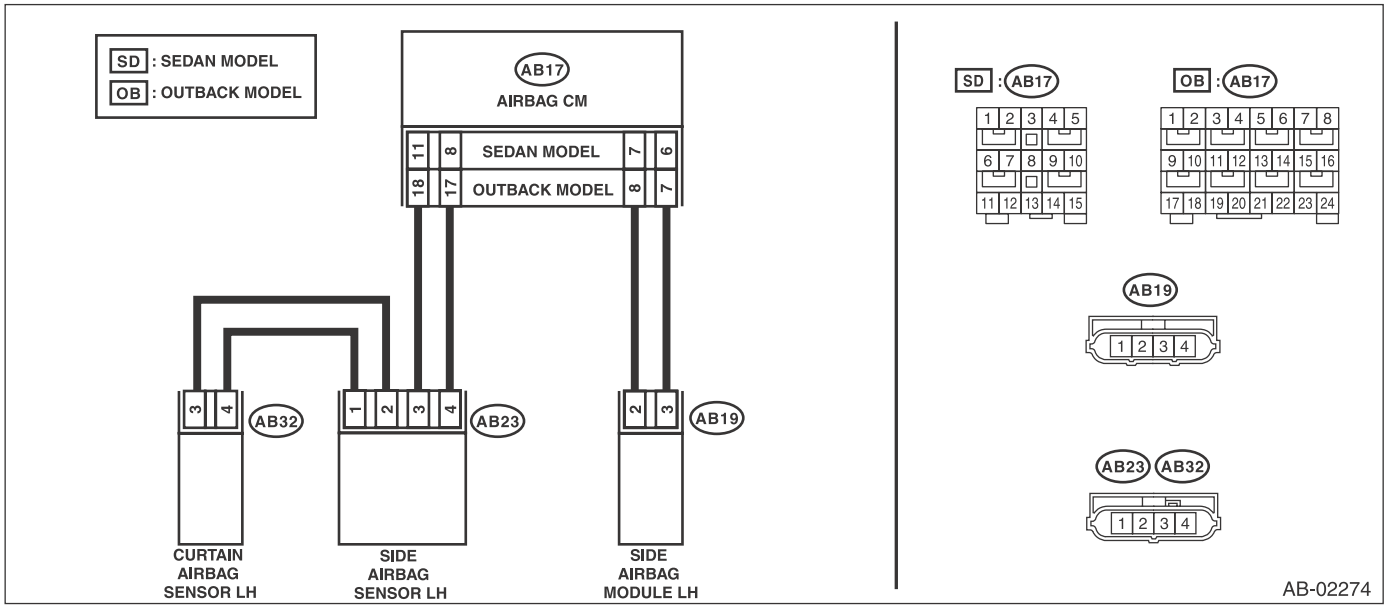

Step		Check	Yes	No
1	**CHECK POOR CONTACT OF CONNECTORS.** Check for poor contact of the connectors between the airbag control module, side airbag module LH and the side airbag sensor LH.	Is there poor contact?	Replace the airbag rear harness along with body harness.	Go to step **2**.
2	**CHECK SIDE AIRBAG MODULE.** 1) Turn the ignition switch to OFF, disconnect the battery ground cable, and wait for 60 seconds or more. 2) Disconnect the connector (AB19) from the side airbag module (LH), and connect the connector (1AJ) in test harness AJ to the connector (AB19). 3) Connect the airbag resistor to the test harness AJ connector (3AJ). 4) Connect the battery ground terminal and turn the ignition switch to ON.	Does the airbag warning light illuminate for six seconds and go off?	Replace the side airbag module (LH). <Ref. to AB-51, REMOVAL, Side Airbag Module.>	Go to step **3**.

	Step	Check	Yes	No
3	**CHECK AIRBAG REAR HARNESS (SIDE AIRBAG MODULE HARNESS LH).** 1) Turn the ignition switch to OFF, disconnect the battery ground cable, and wait for 60 seconds or more. 2) Disconnect the connector (AB21) from seat belt pretensioner (LH). 3) Disconnect the connector (AB31) from curtain airbag module (LH). 4) Disconnect the airbag resistor from test harness AJ. 5) Disconnect the connectors (AB17, AB6, and AB18) from airbag control module. 6) Connect the connector (1AG) in the test harness AG to the connectors (AB6, AB17, and AB18). NOTE: For sedan models, connect test harness AH between the connectors (AB6, AB17, AB18) and (1AG). 7) Measure the resistance between connector (3AJ) in the test harness AJ and chassis ground. ***Connector & terminal*** ***(3AJ) No. 1 — Chassis ground:*** ***(3AJ) No. 2 — Chassis ground:***	Is the resistance 1 MΩ or more?	Go to step **4**.	Replace the airbag rear harness along with body harness.
4	**CHECK AIRBAG CONTROL MODULE.** 1) Connect all connectors. 2) Clear the memory. 3) Perform the Inspection Mode. 4) Read the DTC.	Is the same DTC displayed?	Replace the airbag control module. <Ref. to AB-64, Airbag Control Module.>	Go to step **5**.
5	**CHECK FOR ANY OTHER DTC ON DISPLAY.**	Is any other DTC displayed?	Check DTC using “List of Diagnostic Trouble Code (DTC)”. <Ref. to AB(diag)-38, List of Diagnostic Trouble Code (DTC).>	Finish the diagnosis.

Y: DTC 45 SIDE AIRBAG RH FAILURE

DTC DETECTING CONDITION:

- Side airbag harness (RH) circuit is shorted to power supply.
- Airbag control module is faulty.

CAUTION:

Before performing diagnosis, refer to "CAUTION" in "General Description". <Ref. to AB(diag)-4, CAUTION, General Description.>

WIRING DIAGRAM:

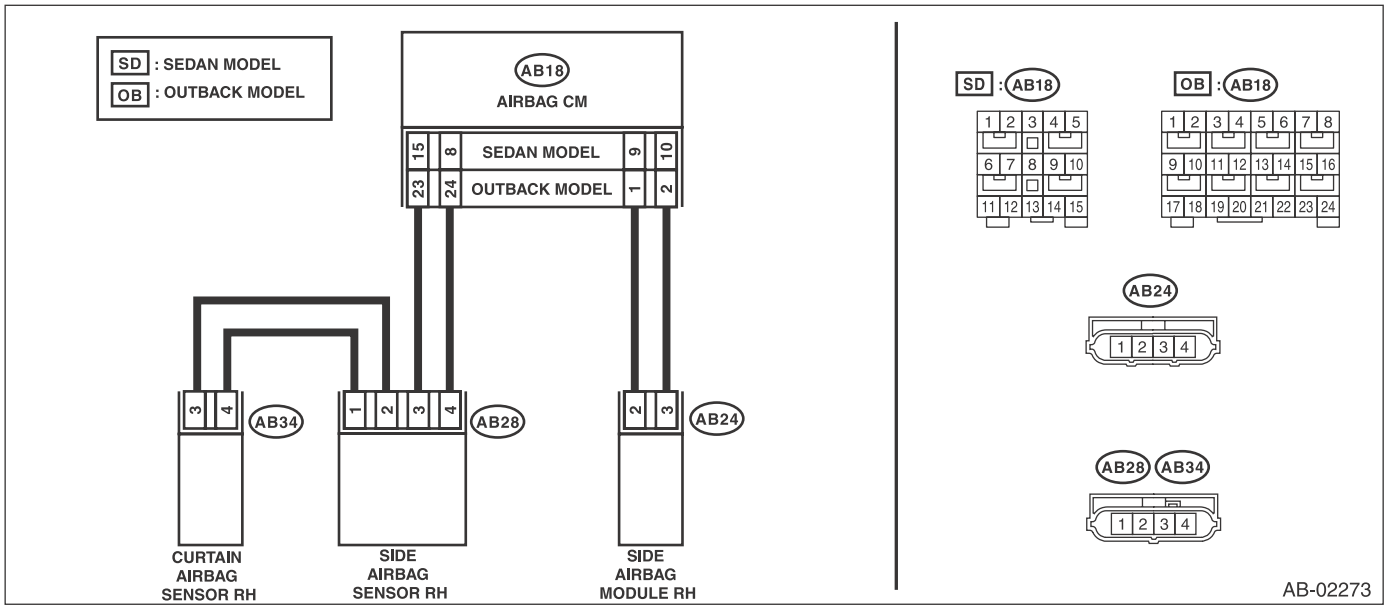

Step		Check	Yes	No
1	**CHECK POOR CONTACT OF CONNECTORS.** Check for poor contact of the connectors between the airbag control module, side airbag module RH and the side airbag sensor RH.	Is there poor contact?	Replace the airbag rear harness along with body harness.	Go to step **2**.
2	**CHECK SIDE AIRBAG MODULE.** 1) Turn the ignition switch to OFF, disconnect the battery ground cable, and wait for 60 seconds or more. 2) Disconnect the connector (AB24) from the side airbag module (RH), and connect the connector (1AJ) in the test harness AJ to connector (AB24). 3) Connect the airbag resistor to the test harness AJ connector (3AJ). 4) Connect the battery ground terminal and turn the ignition switch to ON.	Does the airbag warning light illuminate for six seconds and go off?	Replace the side airbag module (RH). <Ref. to AB-51, REMOVAL, Side Airbag Module.>	Go to step **3**.

	Step	Check	Yes	No
3	**CHECK AIRBAG REAR HARNESS (SIDE AIRBAG MODULE HARNESS RH).** 1) Turn the ignition switch to OFF, disconnect the battery ground cable, and wait for 60 seconds or more. 2) Disconnect the connector (AB26) from seat belt pretensioner (RH). 3) Disconnect the connector (AB33) from curtain airbag module (RH). 4) Disconnect the airbag resistor from test harness AJ. 5) Disconnect the connectors (AB17, AB6, and AB18) from airbag control module. 6) Connect the connector (1AG) in the test harness AG to the connectors (AB6, AB17, and AB18). NOTE: For sedan models, connect test harness AH between the connectors (AB6, AB17, AB18) and (1AG). 7) Connect the battery ground terminal and turn the ignition switch to ON. 8) Measure the voltage between connector (3AJ) in the test harness AJ and chassis ground. ***Connector & terminal*** ***(3AJ) No. 1 (+) — Chassis ground (–):*** ***(3AJ) No. 2 (+) — Chassis ground (–):***	Is the voltage less than 1 V?	Go to step **4**.	Replace the airbag rear harness along with body harness.
4	**CHECK AIRBAG CONTROL MODULE.** 1) Connect all connectors. 2) Clear the memory. 3) Perform the Inspection Mode. 4) Read the DTC.	Is the same DTC displayed?	Replace the airbag control module. <Ref. to AB-64, Airbag Control Module.>	Go to step **5**.
5	**CHECK FOR ANY OTHER DTC ON DISPLAY.**	Is any other DTC displayed?	Check DTC using “List of Diagnostic Trouble Code (DTC)”. <Ref. to AB(diag)-38, List of Diagnostic Trouble Code (DTC).>	Finish the diagnosis.

Z: DTC 46 SIDE AIRBAG LH FAILURE

DTC DETECTING CONDITION:

- Side airbag harness (LH) circuit is shorted to power supply.
- Airbag control module is faulty.

CAUTION:

Before performing diagnosis, refer to "CAUTION" in "General Description". <Ref. to AB(diag)-4, CAUTION, General Description.>

WIRING DIAGRAM:

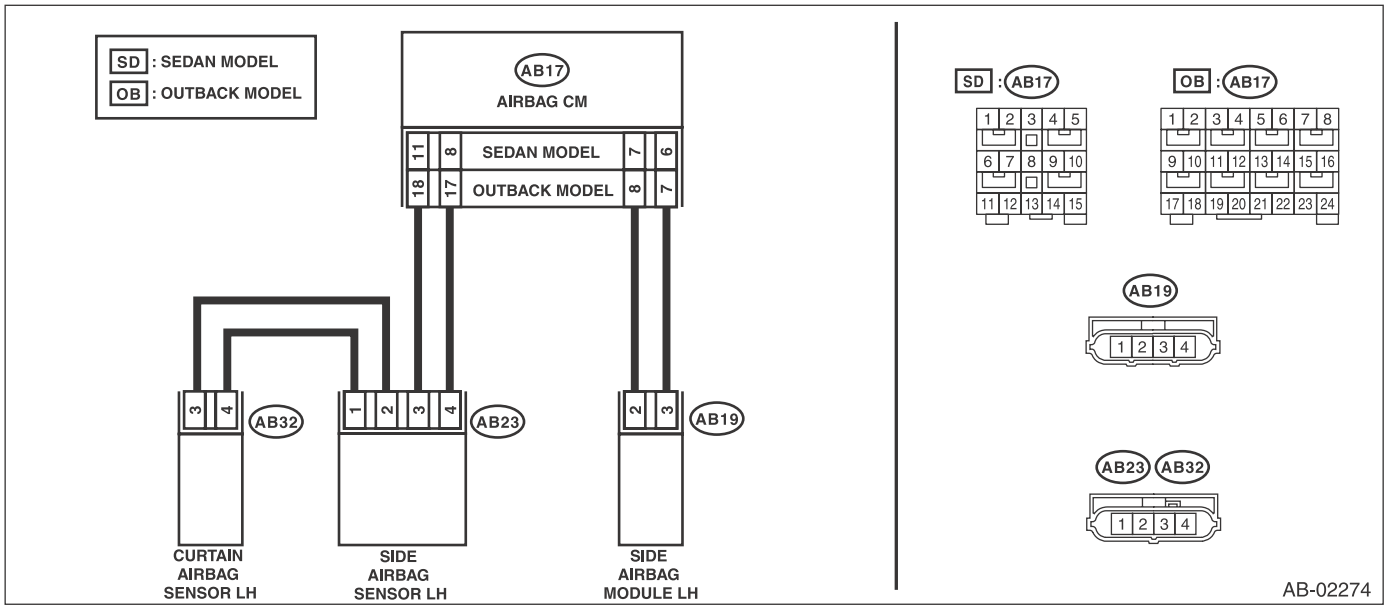

Step		Check	Yes	No
1	**CHECK POOR CONTACT OF CONNECTORS.** Check for poor contact of the connectors between the airbag control module, side airbag module LH and the side airbag sensor LH.	Is there poor contact?	Replace the airbag rear harness along with body harness.	Go to step **2**.
2	**CHECK SIDE AIRBAG MODULE.** 1) Turn the ignition switch to OFF, disconnect the battery ground cable, and wait for 60 seconds or more. 2) Disconnect the connector (AB19) from the side airbag module (LH), and connect the connector (1AJ) in test harness AJ to the connector (AB19). 3) Connect the airbag resistor to the test harness AJ connector (3AJ). 4) Connect the battery ground terminal and turn the ignition switch to ON.	Does the airbag warning light illuminate for six seconds and go off?	Replace the side airbag module (LH). <Ref. to AB-51, REMOVAL, Side Airbag Module.>	Go to step **3**.

	Step	Check	Yes	No
3	**CHECK AIRBAG REAR HARNESS (SIDE AIRBAG MODULE HARNESS LH).** 1) Turn the ignition switch to OFF, disconnect the battery ground cable, and wait for 60 seconds or more. 2) Disconnect the connector (AB21) from seat belt pretensioner (LH). 3) Disconnect the connector (AB31) from curtain airbag module (LH). 4) Disconnect the airbag resistor from test harness AJ. 5) Disconnect the connectors (AB17, AB6, and AB18) from airbag control module. 6) Connect the connector (1AG) in the test harness AG to the connectors (AB6, AB17, and AB18). NOTE: For sedan models, connect test harness AH between the connectors (AB6, AB17, AB18) and (1AG). 7) Connect the battery ground terminal and turn the ignition switch to ON. 8) Measure the voltage between connector (3AJ) in the test harness AJ and chassis ground. ***Connector & terminal*** ***(3AJ) No. 1 (+) — Chassis ground (–):*** ***(3AJ) No. 2 (+) — Chassis ground (–):***	Is the voltage less than 1 V?	Go to step **4**.	Replace the airbag rear harness along with body harness.
4	**CHECK AIRBAG CONTROL MODULE.** 1) Connect all connectors. 2) Clear the memory. 3) Perform the Inspection Mode. 4) Read the DTC.	Is the same DTC displayed?	Replace the airbag control module. <Ref. to AB-64, Airbag Control Module.>	Go to step **5**.
5	**CHECK FOR ANY OTHER DTC ON DISPLAY.**	Is any other DTC displayed?	Check DTC using “List of Diagnostic Trouble Code (DTC)”. <Ref. to AB(diag)-38, List of Diagnostic Trouble Code (DTC).>	Finish the diagnosis.

AA:DTC 4A SIDE AIRBAG RH FAILURE

DTC DETECTING CONDITION:

- Side airbag harness (RH) circuit is shorted.
- Side airbag module is faulty.
- Airbag control module is faulty.

CAUTION:
Before performing diagnosis, refer to "CAUTION" in "General Description". <Ref. to AB(diag)-4, CAUTION, General Description.>
WIRING DIAGRAM:

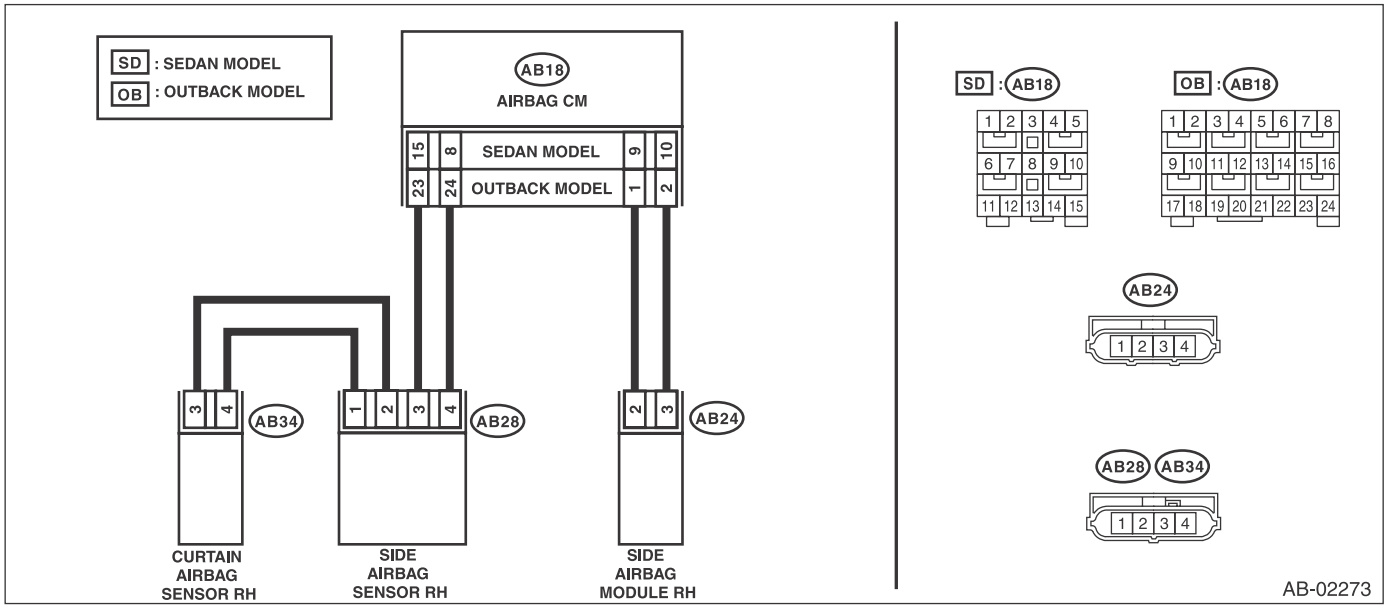

Step		Check	Yes	No
1	**CHECK POOR CONTACT OF CONNECTORS.** Check for poor contact of the connectors between the airbag control module, side airbag module RH and the side airbag sensor RH.	Is there poor contact?	Replace the airbag rear harness along with body harness.	Go to step **2**.
2	**CHECK SIDE AIRBAG MODULE.** 1) Turn the ignition switch to OFF, disconnect the battery ground cable, and wait for 60 seconds or more. 2) Disconnect the connector (AB24) from the side airbag module (RH), and connect the connector (1AJ) in the test harness AJ to connector (AB24). 3) Connect the airbag resistor to the test harness AJ connector (3AJ). 4) Connect the battery ground terminal and turn the ignition switch to ON.	Does the airbag warning light illuminate for six seconds and go off?	Replace the side airbag module (RH). <Ref. to AB-51, REMOVAL, Side Airbag Module.>	Go to step **3**.

	Step	Check	Yes	No
3	**CHECK AIRBAG REAR HARNESS (SIDE AIRBAG MODULE HARNESS RH).** 1) Turn the ignition switch to OFF, disconnect the battery ground cable, and wait for 60 seconds or more. 2) Disconnect the connector (AB26) from seat belt pretensioner (RH). 3) Disconnect the connector (AB33) from curtain airbag module (RH). 4) Disconnect the airbag resistor from test harness AJ. 5) Disconnect the connectors (AB17, AB6, and AB18) from airbag control module. 6) Connect the connector (1AG) in the test harness AG to the connectors (AB6, AB17, and AB18). NOTE: For sedan models, connect test harness AH between the connectors (AB6, AB17, AB18) and (1AG). 7) Measure the resistance between connector (3AJ) terminals in test harness AJ. ***Connector & terminal*** ***(3AJ) No. 1 — (3AJ) No. 2:***	Is the resistance 1 MΩ or more?	Go to step **4**.	Replace the airbag rear harness along with body harness.
4	**CHECK AIRBAG CONTROL MODULE.** 1) Connect all connectors. 2) Clear the memory. 3) Perform the Inspection Mode. 4) Read the DTC.	Is the same DTC displayed?	Replace the airbag control module. <Ref. to AB-64, Airbag Control Module.>	Go to step **5**.
5	**CHECK FOR ANY OTHER DTC ON DISPLAY.**	Is any other DTC displayed?	Check DTC using “List of Diagnostic Trouble Code (DTC)”. <Ref. to AB(diag)-38, List of Diagnostic Trouble Code (DTC).>	Finish the diagnosis.

AB:DTC 4B SIDE AIRBAG LH FAILURE

DTC DETECTING CONDITION:

- Side airbag harness (LH) circuit is shorted.
- Side airbag module (LH) is faulty.
- Airbag control module is faulty.

CAUTION:
Before performing diagnosis, refer to "CAUTION" in "General Description". <Ref. to AB(diag)-4, CAUTION, General Description.>
WIRING DIAGRAM:

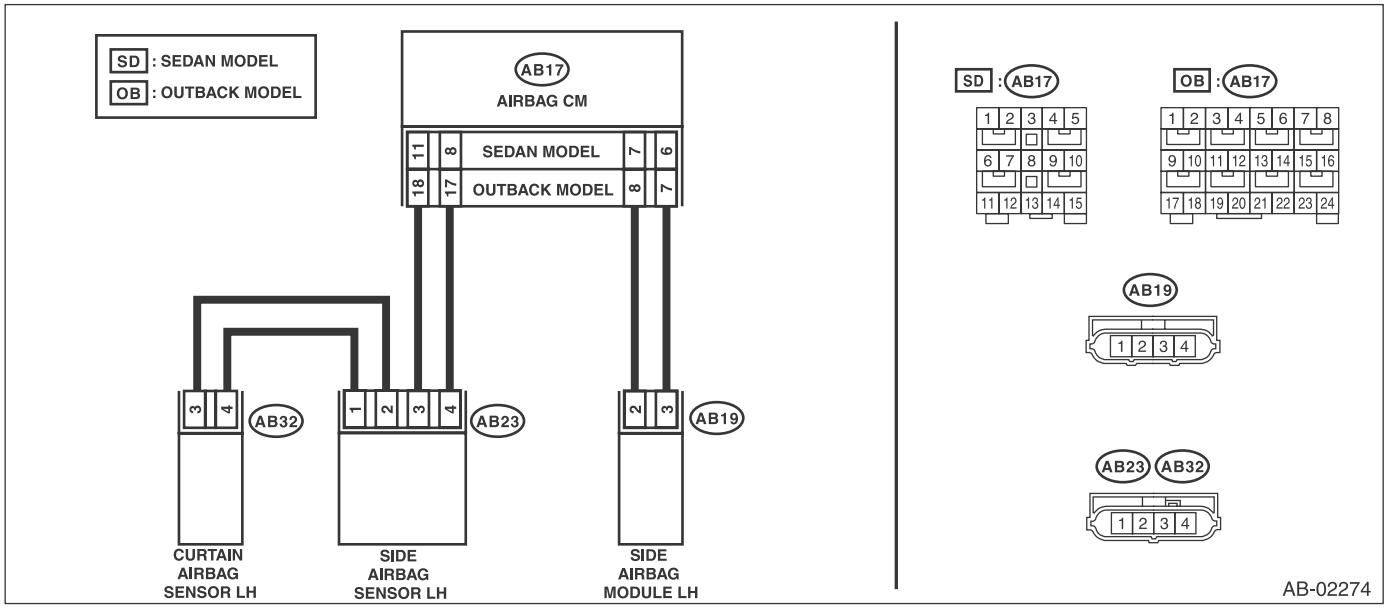

Step		Check	Yes	No
1	**CHECK POOR CONTACT OF CONNECTORS.** Check for poor contact of the connectors between the airbag control module, side airbag module LH and the side airbag sensor LH.	Is there poor contact?	Replace the airbag rear harness along with body harness.	Go to step **2**.
2	**CHECK SIDE AIRBAG MODULE.** 1) Turn the ignition switch to OFF, disconnect the battery ground cable, and wait for 60 seconds or more. 2) Disconnect the connector (AB19) from the side airbag module (LH), and connect the connector (1AJ) in test harness AJ to the connector (AB19). 3) Connect the airbag resistor to the test harness AJ connector (3AJ). 4) Connect the battery ground terminal and turn the ignition switch to ON.	Does the airbag warning light illuminate for six seconds and go off?	Replace the side airbag module (LH). <Ref. to AB-51, REMOVAL, Side Airbag Module.>	Go to step **3**.

Step		Check	Yes	No
3	**CHECK AIRBAG REAR HARNESS (SIDE AIRBAG MODULE HARNESS LH).** 1) Turn the ignition switch to OFF, disconnect the battery ground cable, and wait for 60 seconds or more. 2) Disconnect the connector (AB21) from seat belt pretensioner (LH). 3) Disconnect the connector (AB31) from curtain airbag module (LH). 4) Disconnect the airbag resistor from test harness AJ. 5) Disconnect the connectors (AB17, AB6, and AB18) from airbag control module. 6) Connect the connector (1AG) in the test harness AG to the connectors (AB6, AB17, and AB18). NOTE: For sedan models, connect test harness AH between the connectors (AB6, AB17, AB18) and (1AG). 7) Measure the resistance between connector (3AJ) terminals in test harness AJ. ***Connector & terminal*** ***(3AJ) No. 1 — (3AJ) No. 2:***	Is the resistance 1 MΩ or more?	Go to step **4**.	Replace the airbag rear harness along with body harness.
4	**CHECK AIRBAG CONTROL MODULE.** 1) Connect all connectors. 2) Clear the memory. 3) Perform the Inspection Mode. 4) Read the DTC.	Is the same DTC displayed?	Replace the airbag control module. <Ref. to AB-64, Airbag Control Module.>	Go to step **5**.
5	**CHECK FOR ANY OTHER DTC ON DISPLAY.**	Is any other DTC displayed?	Check DTC using “List of Diagnostic Trouble Code (DTC)”. <Ref. to AB(diag)-38, List of Diagnostic Trouble Code (DTC).>	Finish the diagnosis.

AC:DTC 4D SIDE AIRBAG RH FAILURE

DTC DETECTING CONDITION:

- Side airbag harness (RH) circuit is open.
- Side airbag module is faulty.
- Airbag control module is faulty.

CAUTION:

Before performing diagnosis, refer to "CAUTION" in "General Description". <Ref. to AB(diag)-4, CAUTION, General Description.>

WIRING DIAGRAM:

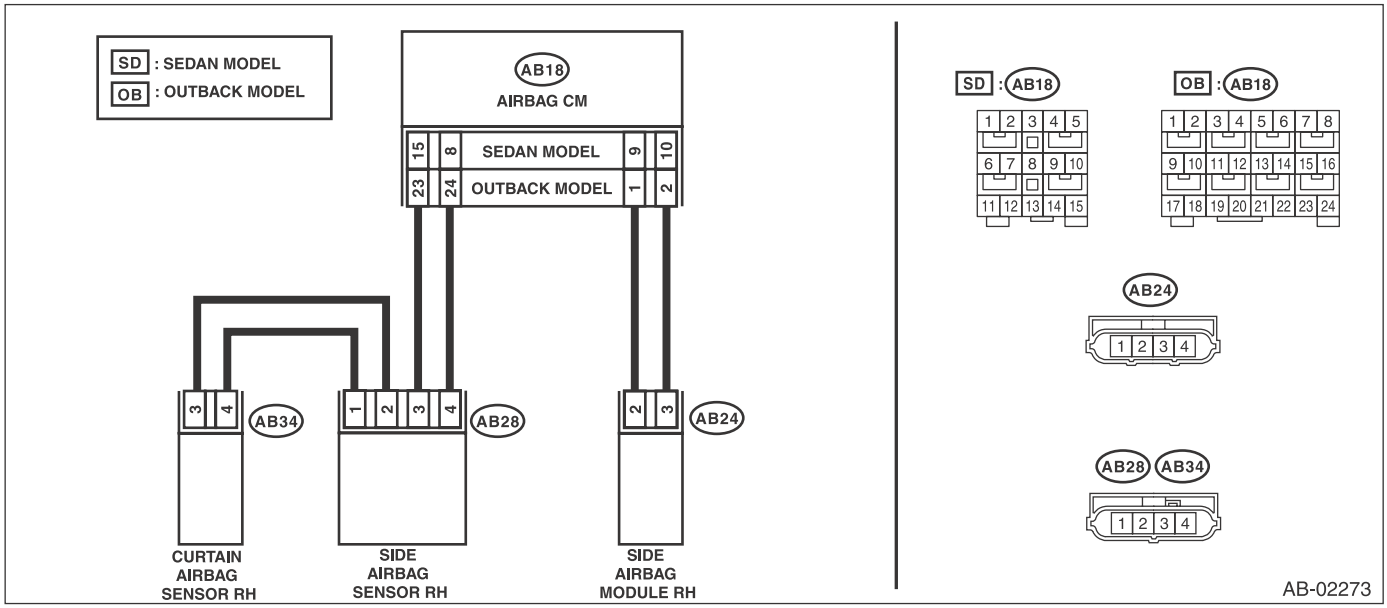

Step		Check	Yes	No
1	**CHECK POOR CONTACT OF CONNECTORS.** Check for poor contact of the connectors between the airbag control module, side airbag module RH and the side airbag sensor RH.	Is there poor contact?	Replace the airbag rear harness along with body harness.	Go to step **2**.
2	**CHECK SIDE AIRBAG MODULE.** 1) Turn the ignition switch to OFF, disconnect the battery ground cable, and wait for 60 seconds or more. 2) Disconnect the connector (AB24) from the side airbag module (RH), and connect the connector (1AJ) in the test harness AJ to connector (AB24). 3) Connect the airbag resistor to the test harness AJ connector (3AJ). 4) Connect the battery ground terminal and turn the ignition switch to ON.	Does the airbag warning light illuminate for six seconds and go off?	Replace the side airbag module (RH). <Ref. to AB-51, REMOVAL, Side Airbag Module.>	Go to step **3**.

	Step	Check	Yes	No
3	**CHECK AIRBAG REAR HARNESS (SIDE AIRBAG MODULE HARNESS RH).** 1) Turn the ignition switch to OFF, disconnect the battery ground cable, and wait for 60 seconds or more. 2) Disconnect the connector (AB26) from seat belt pretensioner (RH). 3) Disconnect the connector (AB33) from curtain airbag module (RH). 4) Disconnect the airbag resistor from test harness AJ. 5) Disconnect the connectors (AB17, AB6, and AB18) from airbag control module. 6) Connect the connector (1AG) in the test harness AG to the connectors (AB6, AB17, and AB18). NOTE: For sedan models, connect test harness AH between the connectors (AB6, AB17, AB18) and (1AG). 7) Measure the resistance between connector (4AG) or (5AG) in the test harness AG and connector (3AJ) in the test harness AJ. ***Connector & terminal*** ***Sedan model*** ***(4AG) No. 8 — (3AJ) No. 2:*** ***(4AG) No. 10 — (3AJ) No. 1:*** ***OUTBACK model*** ***(5AG) No. 1 — (3AJ) No. 2:*** ***(5AG) No. 3 — (3AJ) No. 1:***	Is the resistance less than 10 Ω?	Go to step **4**.	Replace the airbag rear harness along with body harness.
4	**CHECK AIRBAG CONTROL MODULE.** 1) Connect all connectors. 2) Clear the memory. 3) Perform the Inspection Mode. 4) Read the DTC.	Is the same DTC displayed?	Replace the airbag control module. <Ref. to AB-64, Airbag Control Module.>	Go to step **5**.
5	**CHECK FOR ANY OTHER DTC ON DISPLAY.**	Is any other DTC displayed?	Check DTC using “List of Diagnostic Trouble Code (DTC)”. <Ref. to AB(diag)-38, List of Diagnostic Trouble Code (DTC).>	Finish the diagnosis.

AD:DTC 4E SIDE AIRBAG LH FAILURE

DTC DETECTING CONDITION:

- Side airbag harness (LH) circuit is open.
- Side airbag module (LH) is faulty.
- Airbag control module is faulty.

CAUTION:

Before performing diagnosis, refer to "CAUTION" in "General Description". <Ref. to AB(diag)-4, CAUTION, General Description.>

WIRING DIAGRAM:

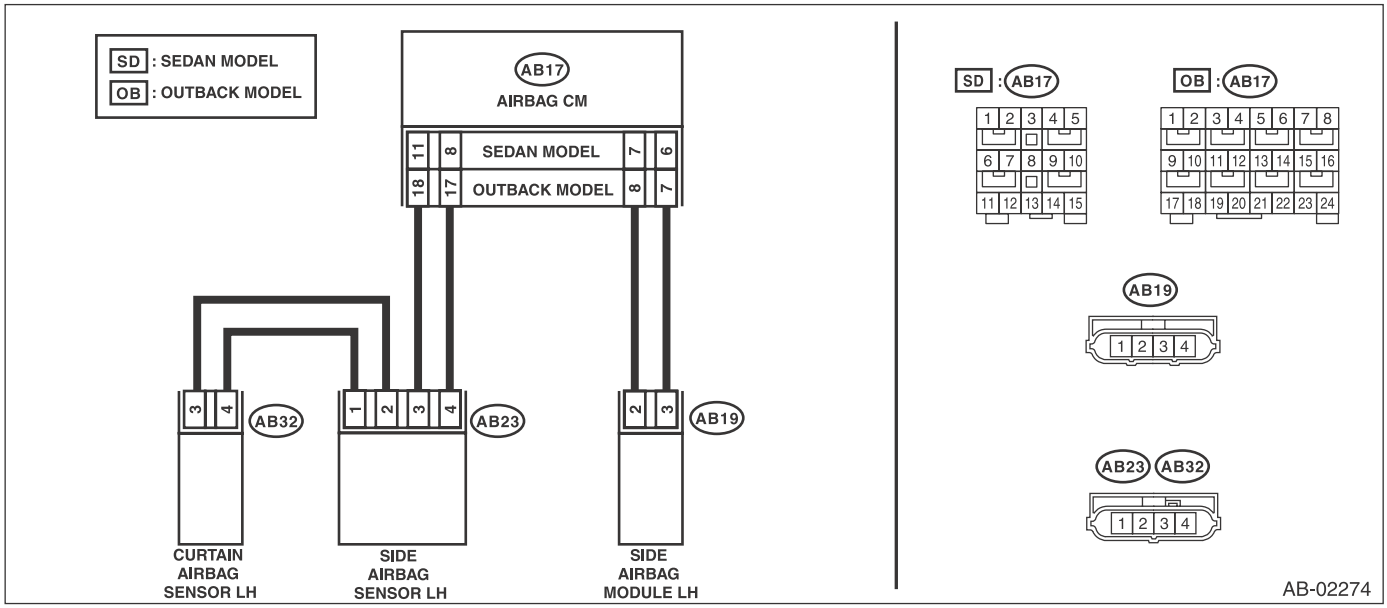

Step		Check	Yes	No
1	**CHECK POOR CONTACT OF CONNECTORS.** Check for poor contact of the connectors between the airbag control module, side airbag module LH and the side airbag sensor LH.	Is there poor contact?	Replace the airbag rear harness along with body harness.	Go to step **2**.
2	**CHECK SIDE AIRBAG MODULE.** 1) Turn the ignition switch to OFF, disconnect the battery ground cable, and wait for 60 seconds or more. 2) Disconnect the connector (AB19) from the side airbag module (LH), and connect the connector (1AJ) in test harness AJ to the connector (AB19). 3) Connect the airbag resistor to the test harness AJ connector (3AJ). 4) Connect the battery ground terminal and turn the ignition switch to ON.	Does the airbag warning light illuminate for six seconds and go off?	Replace the side airbag module (LH). <Ref. to AB-51, REMOVAL, Side Airbag Module.>	Go to step **3**.

	Step	Check	Yes	No
3	**CHECK AIRBAG REAR HARNESS (SIDE AIRBAG MODULE HARNESS LH).** 1) Turn the ignition switch to OFF, disconnect the battery ground cable, and wait for 60 seconds or more. 2) Disconnect the connector (AB21) from seat belt pretensioner (LH). 3) Disconnect the connector (AB31) from curtain airbag module (LH). 4) Disconnect the airbag resistor from test harness AJ. 5) Disconnect the connectors (AB17, AB6, and AB18) from airbag control module. 6) Connect the connector (1AG) in the test harness AG to the connectors (AB6, AB17, and AB18). NOTE: For sedan models, connect test harness AH between the connectors (AB6, AB17, AB18) and (1AG). 7) Measure the resistance between connector (4AG) or (5AG) in the test harness AG and connector (3AJ) in the test harness AJ. ***Connector & terminal*** ***Sedan model*** ***(4AG) No. 11 — (3AJ) No. 1:*** ***(4AG) No. 13 — (3AJ) No. 2:*** ***OUTBACK model*** ***(5AG) No. 5 — (3AJ) No. 1:*** ***(5AG) No. 7 — (3AJ) No. 2:***	Is the resistance less than 10 Ω?	Go to step **4**.	Replace the airbag rear harness along with body harness.
4	**CHECK AIRBAG CONTROL MODULE.** 1) Connect all connectors. 2) Clear the memory. 3) Perform the Inspection Mode. 4) Read the DTC.	Is the same DTC displayed?	Replace the airbag control module. <Ref. to AB-64, Airbag Control Module.>	Go to step **5**.
5	**CHECK FOR ANY OTHER DTC ON DISPLAY.**	Is any other DTC displayed?	Check DTC using “List of Diagnostic Trouble Code (DTC)”. <Ref. to AB(diag)-38, List of Diagnostic Trouble Code (DTC).>	Finish the diagnosis.

AE:DTC 53 SIDE AIRBAG SENSOR RH FAILURE

DTC DETECTING CONDITION:
Side airbag sensor (RH) is faulty.
When DTC 53 is displayed, the circuit within the side airbag sensor (RH) is faulty.
Replace the side airbag sensor (RH). <Ref. to AB-74, Side Airbag Sensor.>

AF:DTC 54 SIDE AIRBAG SENSOR LH FAILURE

DTC DETECTING CONDITION:
Side airbag sensor (LH) is faulty.
When DTC 54 is displayed, the circuit within the side airbag sensor (LH) is faulty.
Replace the side airbag sensor (LH). <Ref. to AB-74, Side Airbag Sensor.>

AG:DTC 55 SIDE CURTAIN AIRBAG FIRING OUTPUT

This DTC is displayed when the side airbag module and curtain airbag module are deployed.
Once this DTC is displayed, the memory cannot be cleared. Replace the following parts.

- Airbag control module <Ref. to AB-64, Airbag Control Module.>
- Side airbag module (operating side) <Ref. to AB-51, Side Airbag Module.>
- Side airbag sensor (operating side) <Ref. to AB-74, Side Airbag Sensor.>
- Curtain airbag module (operating side) <Ref. to AB-61, Curtain Airbag Module.>
- Curtain airbag sensor (operating side) <Ref. to AB-80, Curtain Airbag Sensor.>

AH:DTC 58 CURTAIN AIRBAG SENSOR RH FAILURE

DTC DETECTING CONDITION:
Curtain airbag sensor (RH) is faulty.
If DTC 58 is displayed, the circuit within the curtain airbag sensor (RH) is faulty.
Replace the curtain airbag sensor (RH). <Ref. to AB-80, Curtain Airbag Sensor.>

AI: DTC 59 CURTAIN AIRBAG SENSOR LH FAILURE

DTC DETECTING CONDITION:
Curtain airbag sensor (LH) is faulty.
If DTC 59 is displayed, the circuit within the curtain airbag sensor (LH) is faulty.
Replace the curtain airbag sensor (LH). <Ref. to AB-80, Curtain Airbag Sensor.>

AJ:DTC 5A SIDE AIRBAG SENSOR RH FALSE INSTALLATION

DTC DETECTING CONDITION:
Side A/B sensor RH is misinstalled.

	Step	Check	Yes	No
1	**REPLACE SIDE AIRBAG SENSOR (RH).** 1) Turn the ignition switch to OFF, disconnect the battery ground cable, and wait for 60 seconds or more. 2) Replace the side A/B sensor (RH) with a genuine sensor. <Ref. to AB-74, REMOVAL, Side Airbag Sensor.>	Does the warning light go off?	Finish the diagnosis.	Replace the airbag control module. <Ref. to AB-64, REMOVAL, Airbag Control Module.>

AK:DTC 5B SIDE AIRBAG SENSOR LH FALSE INSTALLATION

DTC DETECTING CONDITION:

Side A/B sensor LH is misinstalled.

	Step	Check	Yes	No
1	**REPLACE SIDE AIRBAG SENSOR (LH).** 1) Turn the ignition switch to OFF, disconnect the battery ground cable, and wait for 60 seconds or more. 2) Replace the side A/B sensor (LH) with a genuine sensor. <Ref. to AB-74, REMOVAL, Side Airbag Sensor.>	Does the warning light go off?	Finish the diagnosis.	Replace the airbag control module. <Ref. to AB-64, REMOVAL, Airbag Control Module.>

AL:DTC 5C CURTAIN AIRBAG SENSOR RH FALSE INSTALLATION

DTC DETECTING CONDITION:

Curtain side airbag sensor RH is misinstalled.

	Step	Check	Yes	No
1	**REPLACE CURTAIN AIRBAG SENSOR (RH).** 1) Turn the ignition switch to OFF, disconnect the battery ground cable, and wait for 60 seconds or more. 2) Replace the curtain A/B sensor (RH) with a genuine sensor. <Ref. to AB-80, REMOVAL, Curtain Airbag Sensor.>	Does the warning light go off?	Finish the diagnosis.	Replace the airbag control module. <Ref. to AB-64, REMOVAL, Airbag Control Module.>

AM:DTC 5D CURTAIN AIRBAG SENSOR LH FALSE INSTALLATION

DTC DETECTING CONDITION:

Curtain side airbag sensor LH is misinstalled.

	Step	Check	Yes	No
1	**REPLACE CURTAIN AIRBAG SENSOR (LH).** 1) Turn the ignition switch to OFF, disconnect the battery ground cable, and wait for 60 seconds or more. 2) Replace the curtain A/B sensor (LH) with a genuine sensor. <Ref. to AB-80, REMOVAL, Curtain Airbag Sensor.>	Does the warning light go off?	Finish the diagnosis.	Replace the airbag control module. <Ref. to AB-64, REMOVAL, Airbag Control Module.>

AN:DTC 61 BELT PRETENSIONER RH FAILURE

DTC DETECTING CONDITION:

- Seat belt pretensioner (RH) circuit is shorted to ground.
- Pretensioner (RH) is faulty.
- Pretensioner harness is faulty.
- Airbag control module is faulty.

CAUTION:
Before performing diagnosis, refer to "CAUTION" in "General Description". <Ref. to AB(diag)-4, CAUTION, General Description.>
WIRING DIAGRAM:

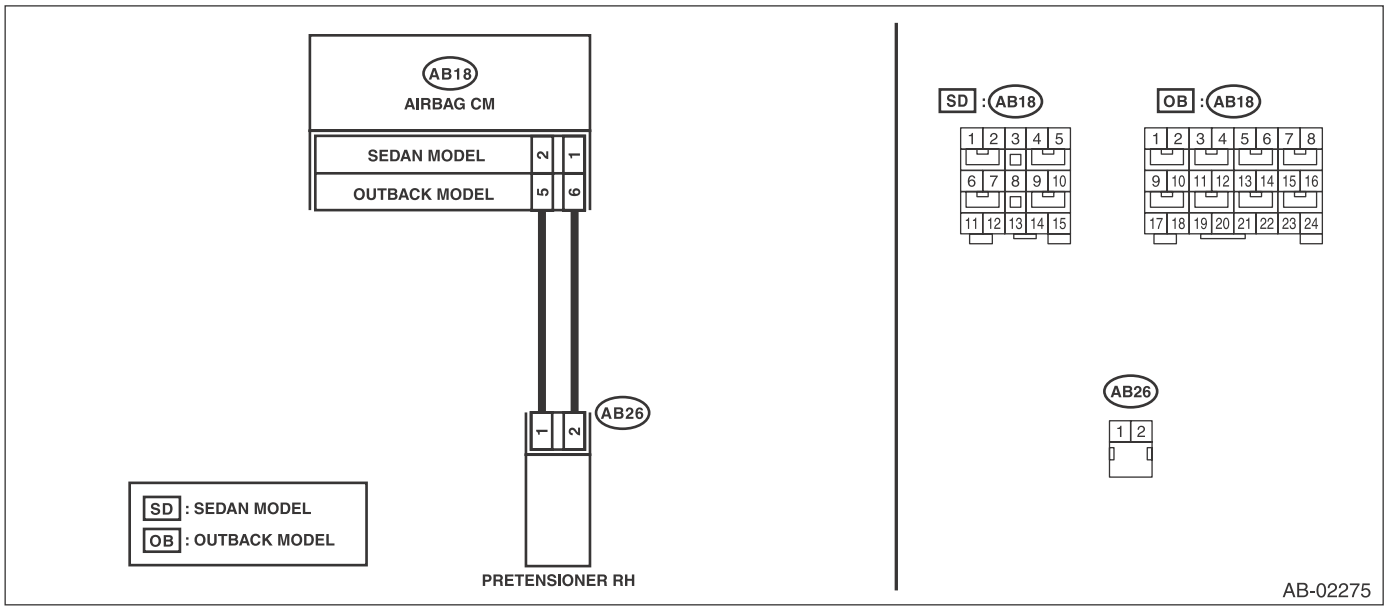

Step		Check	Yes	No
1	**CHECK POOR CONTACT OF CONNECTORS.** Check for poor contact of the connectors between the airbag control module and the seat belt pretensioner RH.	Is there poor contact?	Replace the airbag rear harness along with body harness.	Go to step **2**.
2	**CHECK SEAT BELT PRETENSIONER.** 1) Turn the ignition switch to OFF, disconnect the battery ground cable, and wait for 60 seconds or more. 2) Disconnect the connector (AB26) from seat belt pretensioner (RH). 3) Connect the connector (1N) in the test harness N to the connector (AB26). 4) Connect the airbag resistor to the connector (2N) of test harness N. 5) Connect the battery ground terminal and turn the ignition switch to ON.	Does the airbag warning light illuminate for six seconds and go off?	Replace the seat belt pretensioner (RH). <Ref. to SB-17, Front Seat Belt.>	Go to step **3**.

	Step	Check	Yes	No
3	**CHECK AIRBAG REAR HARNESS (PRETENSIONER HARNESS RH).** 1) Turn the ignition switch to OFF, disconnect the battery ground cable, and wait for 60 seconds or more. 2) Disconnect the airbag resistor from test harness N. 3) Disconnect connector (AB24) from side airbag module (RH). 4) Disconnect the connector (AB33) from curtain airbag module (RH). 5) Disconnect the connectors (AB17, AB6, and AB18) from airbag control module. 6) Connect the connector (1AG) in the test harness AG to the connectors (AB6, AB17, and AB18). NOTE: For sedan models, connect test harness AH between the connectors (AB6, AB17, AB18) and (1AG). 7) Measure the resistance between connector (3AG) in the test harness AG and chassis ground. ***Connector & terminal*** ***(3AG) No. 10 — Chassis ground:*** ***(3AG) No. 12 — Chassis ground:***	Is the resistance 1 MΩ or more?	Go to step **4**.	Replace the airbag rear harness along with body harness.
4	**CHECK AIRBAG CONTROL MODULE.** 1) Connect all connectors. 2) Clear the memory. 3) Perform the Inspection Mode. 4) Read the DTC.	Is the same DTC displayed?	Replace the airbag control module. <Ref. to AB-64, Airbag Control Module.>	Go to step **5**.
5	**CHECK FOR ANY OTHER DTC ON DISPLAY.**	Is any other DTC displayed?	Check DTC using "List of Diagnostic Trouble Code (DTC)". <Ref. to AB(diag)-38, List of Diagnostic Trouble Code (DTC).>	Finish the diagnosis.

AO:DTC 62 BELT PRETENSIONER LH FAILURE

DTC DETECTING CONDITION:

- Seat belt pretensioner (LH) circuit is shorted to ground.
- Pretensioner (LH) is faulty.
- Pretensioner harness is faulty.
- Airbag control module is faulty.

CAUTION:
Before performing diagnosis, refer to "CAUTION" in "General Description". <Ref. to AB(diag)-4, CAUTION, General Description.>
WIRING DIAGRAM:

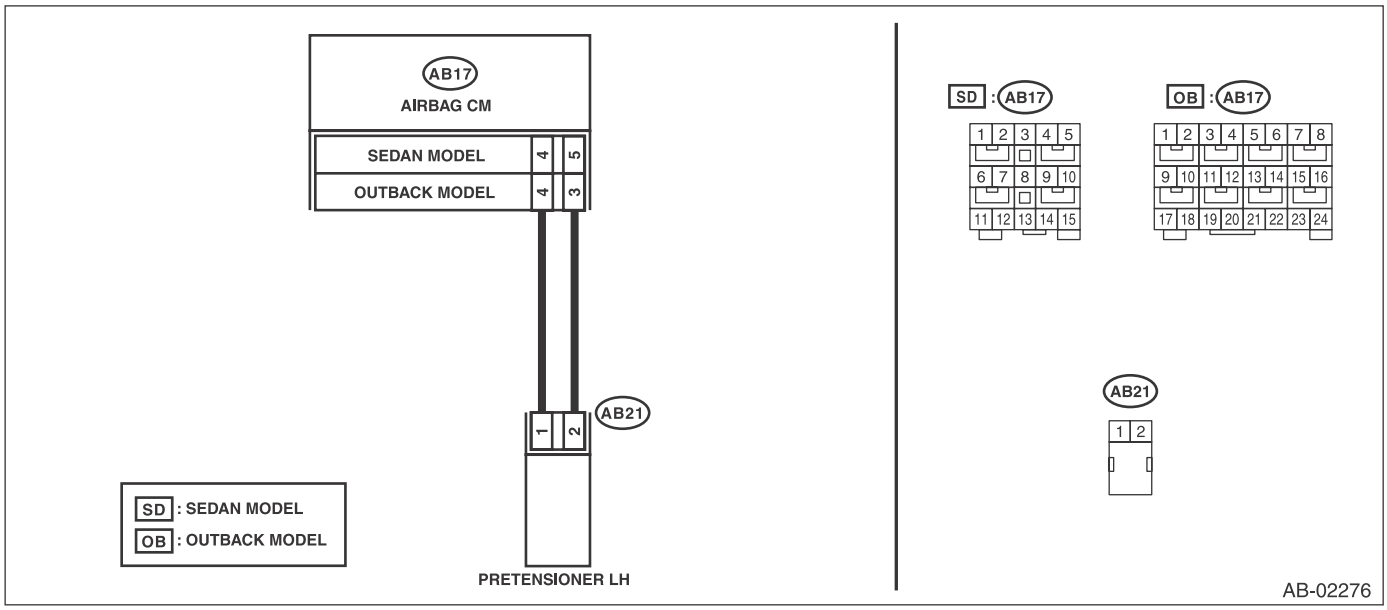

Step		Check	Yes	No
1	**CHECK POOR CONTACT OF CONNECTORS.** Check for poor contact of the connectors between the airbag control module and the seat belt pretensioner LH.	Is there poor contact?	Replace the airbag rear harness along with body harness.	Go to step **2**.
2	**CHECK SEAT BELT PRETENSIONER.** 1) Turn the ignition switch to OFF, disconnect the battery ground cable, and wait for 60 seconds or more. 2) Disconnect the connector (AB21) from seat belt pretensioner (LH). 3) Connect the connector (1N) in the test harness N to the connector (AB21). 4) Connect the airbag resistor to the connector (2N) of test harness N. 5) Connect the battery ground terminal and turn the ignition switch to ON.	Does the airbag warning light illuminate for six seconds and go off?	Replace the seat belt pretensioner (LH). <Ref. to SB-17, Front Seat Belt.>	Go to step **3**.

	Step	Check	Yes	No
3	**CHECK AIRBAG REAR HARNESS (PRETENSIONER HARNESS LH).** 1) Turn the ignition switch to OFF, disconnect the battery ground cable, and wait for 60 seconds or more. 2) Disconnect the airbag resistor from test harness N. 3) Disconnect connector (AB19) from side airbag module (LH). 4) Disconnect the connector (AB31) from curtain airbag module (LH). 5) Disconnect the connectors (AB17, AB6, and AB18) from airbag control module. 6) Connect the connector (1AG) in the test harness AG to the connectors (AB6, AB17, and AB18). NOTE: For sedan models, connect test harness AH between the connectors (AB6, AB17, AB18) and (1AG). 7) Measure the resistance between connector (3AG) in the test harness AG and chassis ground. ***Connector & terminal*** ***(3AG) No. 18 — Chassis ground:*** ***(3AG) No. 20 — Chassis ground:***	Is the resistance 1 MΩ or more?	Go to step **4**.	Replace the airbag rear harness along with body harness.
4	**CHECK AIRBAG CONTROL MODULE.** 1) Connect all connectors. 2) Clear the memory. 3) Perform the Inspection Mode. 4) Read the DTC.	Is the same DTC displayed?	Replace the airbag control module. <Ref. to AB-64, Airbag Control Module.>	Go to step **5**.
5	**CHECK FOR ANY OTHER DTC ON DISPLAY.**	Is any other DTC displayed?	Check DTC using "List of Diagnostic Trouble Code (DTC)". <Ref. to AB(diag)-38, List of Diagnostic Trouble Code (DTC).>	Finish the diagnosis.

AP:DTC 65 BELT PRETENSIONER RH FAILURE

DTC DETECTING CONDITION:

- Seat belt pretensioner (RH) circuit is shorted to power supply.
- Pretensioner (RH) is faulty.
- Pretensioner harness is faulty.
- Airbag control module is faulty.

CAUTION:
Before performing diagnosis, refer to "CAUTION" in "General Description". <Ref. to AB(diag)-4, CAUTION, General Description.>
WIRING DIAGRAM:

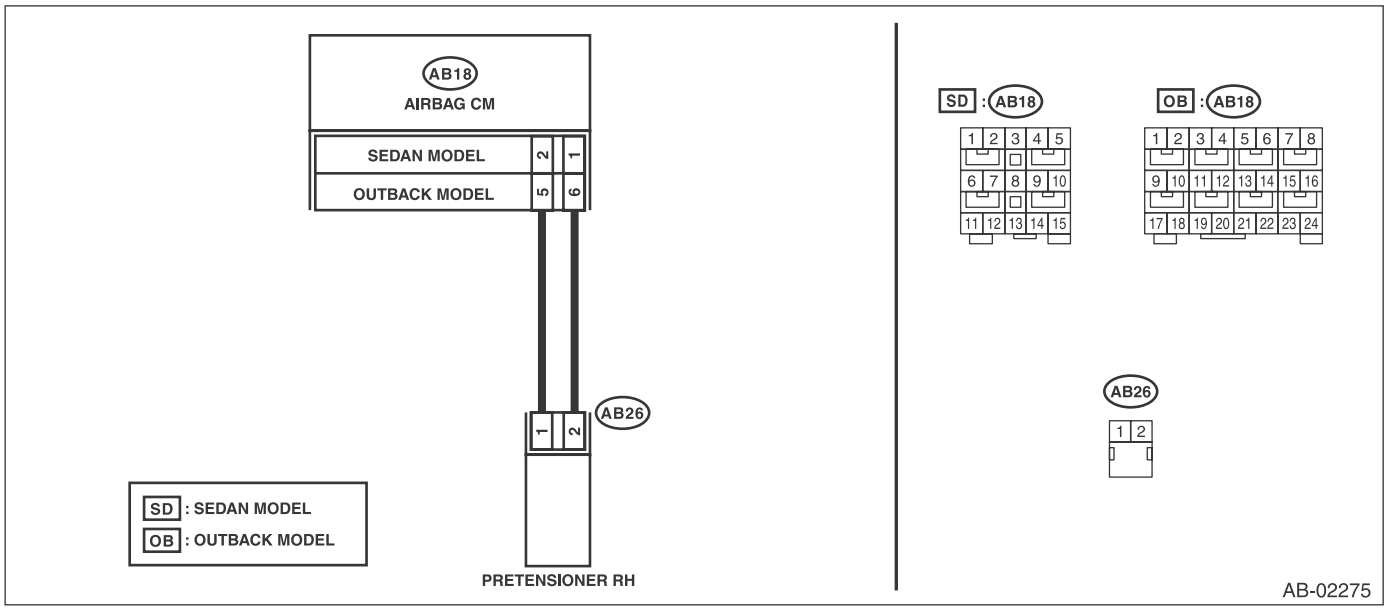

Step		Check	Yes	No
1	**CHECK POOR CONTACT OF CONNECTORS.** Check for poor contact of the connectors between the airbag control module and the seat belt pretensioner RH.	Is there poor contact?	Replace the airbag rear harness along with body harness.	Go to step **2**.
2	**CHECK SEAT BELT PRETENSIONER.** 1) Turn the ignition switch to OFF, disconnect the battery ground cable, and wait for 60 seconds or more. 2) Disconnect the connector (AB26) from seat belt pretensioner (RH). 3) Connect the connector (1N) in the test harness N to the connector (AB26). 4) Connect the airbag resistor to the connector (2N) of test harness N. 5) Connect the battery ground terminal and turn the ignition switch to ON.	Does the airbag warning light illuminate for six seconds and go off?	Replace the seat belt pretensioner (RH). <Ref. to SB-17, Front Seat Belt.>	Go to step **3**.

	Step	Check	Yes	No
3	**CHECK AIRBAG REAR HARNESS (PRETENSIONER HARNESS RH).** 1) Turn the ignition switch to OFF, disconnect the battery ground cable, and wait for 60 seconds or more. 2) Disconnect the airbag resistor from test harness N. 3) Disconnect connector (AB24) from side airbag module (RH). 4) Disconnect the connector (AB33) from curtain airbag module (RH). 5) Disconnect the connectors (AB17, AB6, and AB18) from airbag control module. 6) Connect the connector (1AG) in the test harness AG to the connectors (AB6, AB17, and AB18). NOTE: For sedan models, connect test harness AH between the connectors (AB6, AB17, AB18) and (1AG). 7) Connect the battery ground terminal and turn the ignition switch to ON. 8) Measure the voltage between connector (3AG) in the test harness AG and chassis ground. ***Connector & terminal*** ***(3AG) No. 10 (+) — Chassis ground (–):*** ***(3AG) No. 12 (+) — Chassis ground (–):***	Is the voltage less than 1 V?	Go to step **4**.	Replace the airbag rear harness along with body harness.
4	**CHECK AIRBAG CONTROL MODULE.** 1) Connect all connectors. 2) Clear the memory. 3) Perform the Inspection Mode. 4) Read the DTC.	Is the same DTC displayed?	Replace the airbag control module. <Ref. to AB-64, Airbag Control Module.>	Go to step **5**.
5	**CHECK FOR ANY OTHER DTC ON DISPLAY.**	Is any other DTC displayed?	Check DTC using “List of Diagnostic Trouble Code (DTC)”. <Ref. to AB(diag)-38, List of Diagnostic Trouble Code (DTC).>	Finish the diagnosis.

AQ:DTC 66 BELT PRETENSIONER LH FAILURE

DTC DETECTING CONDITION:

- Seat belt pretensioner (LH) circuit is shorted to power supply.
- Pretensioner (LH) is faulty.
- Pretensioner harness is faulty.
- Airbag control module is faulty.

CAUTION:
Before performing diagnosis, refer to "CAUTION" in "General Description". <Ref. to AB(diag)-4, CAUTION, General Description.>
WIRING DIAGRAM:

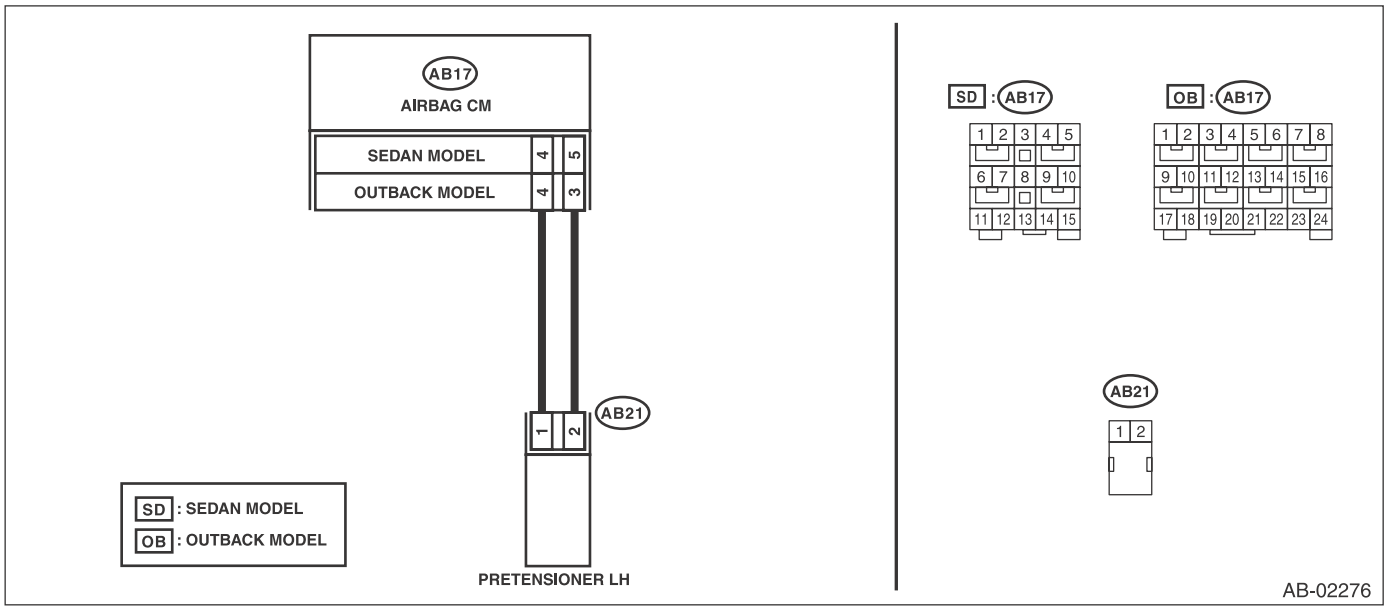

Step		Check	Yes	No
1	**CHECK POOR CONTACT OF CONNECTORS.** Check for poor contact of the connectors between the airbag control module and the seat belt pretensioner LH.	Is there poor contact?	Replace the airbag rear harness along with body harness.	Go to step **2**.
2	**CHECK SEAT BELT PRETENSIONER.** 1) Turn the ignition switch to OFF, disconnect the battery ground cable, and wait for 60 seconds or more. 2) Disconnect the connector (AB21) from seat belt pretensioner (LH). 3) Connect the connector (1N) in the test harness N to the connector (AB21). 4) Connect the airbag resistor to the connector (2N) of test harness N. 5) Connect the battery ground terminal and turn the ignition switch to ON.	Does the airbag warning light illuminate for six seconds and go off?	Replace the seat belt pretensioner (LH). <Ref. to SB-17, Front Seat Belt.>	Go to step **3**.

	Step	Check	Yes	No
3	**CHECK AIRBAG REAR HARNESS (PRETENSIONER HARNESS LH).** 1) Turn the ignition switch to OFF, disconnect the battery ground cable, and wait for 60 seconds or more. 2) Disconnect the airbag resistor from test harness N. 3) Disconnect connector (AB19) from side airbag module (LH). 4) Disconnect the connector (AB31) from curtain airbag module (LH). 5) Disconnect the connectors (AB17, AB6, and AB18) from airbag control module. 6) Connect the connector (1AG) in the test harness AG to the connectors (AB6, AB17, and AB18). NOTE: For sedan models, connect test harness AH between the connectors (AB6, AB17, AB18) and (1AG). 7) Connect the battery ground terminal and turn the ignition switch to ON. 8) Measure the voltage between connector (3AG) in the test harness AG and chassis ground. ***Connector & terminal*** ***(3AG) No. 18 (+) — Chassis ground (–):*** ***(3AG) No. 20 (+) — Chassis ground (–):***	Is the voltage less than 1 V?	Go to step **4**.	Replace the airbag rear harness along with body harness.
4	**CHECK AIRBAG CONTROL MODULE.** 1) Connect all connectors. 2) Clear the memory. 3) Perform the Inspection Mode. 4) Read the DTC.	Is the same DTC displayed?	Replace the airbag control module. <Ref. to AB-64, Airbag Control Module.>	Go to step **5**.
5	**CHECK FOR ANY OTHER DTC ON DISPLAY.**	Is any other DTC displayed?	Check DTC using “List of Diagnostic Trouble Code (DTC)”. <Ref. to AB(diag)-38, List of Diagnostic Trouble Code (DTC).>	Finish the diagnosis.

AR:DTC 6A BELT PRETENSIONER RH FAILURE

DTC DETECTING CONDITION:

- Seat belt pretensioner (RH) circuit is shorted.
- Pretensioner (RH) is faulty.
- Pretensioner harness is faulty.
- Airbag control module is faulty.

CAUTION:
Before performing diagnosis, refer to "CAUTION" in "General Description". <Ref. to AB(diag)-4, CAUTION, General Description.>
WIRING DIAGRAM:

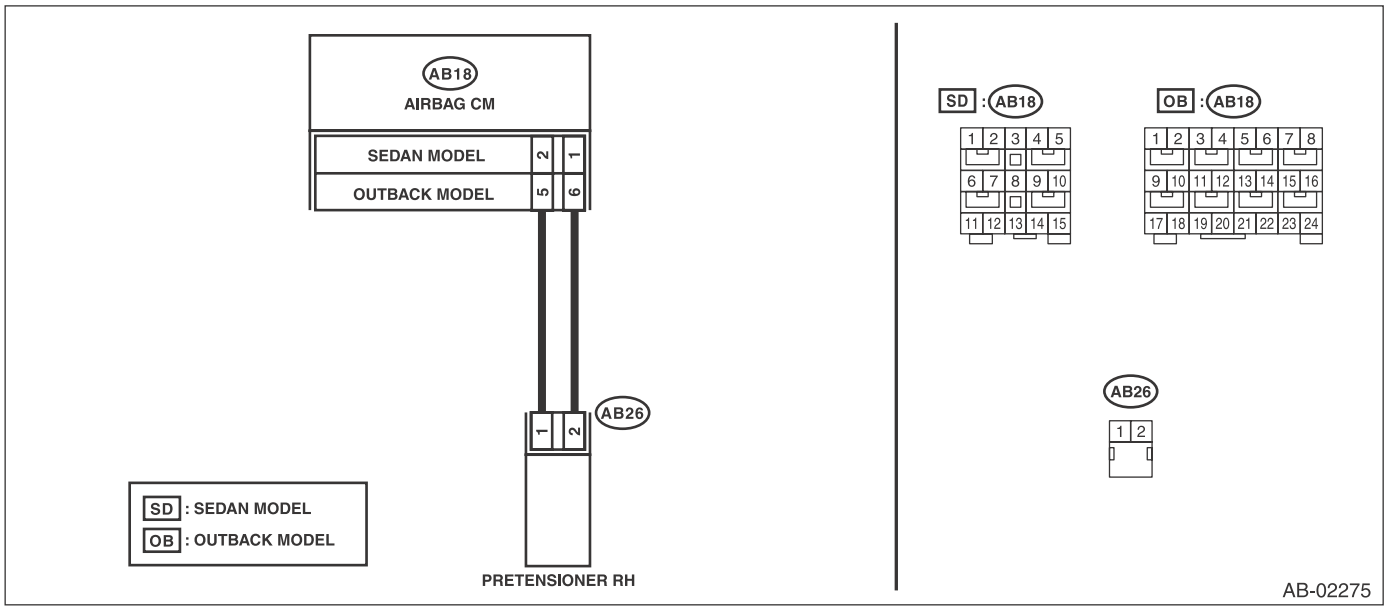

Step		Check	Yes	No
1	**CHECK POOR CONTACT OF CONNECTORS.** Check for poor contact of the connectors between the airbag control module and the seat belt pretensioner RH.	Is there poor contact?	Replace the airbag rear harness along with body harness.	Go to step **2**.
2	**CHECK SEAT BELT PRETENSIONER.** 1) Turn the ignition switch to OFF, disconnect the battery ground cable, and wait for 60 seconds or more. 2) Disconnect the connector (AB26) from seat belt pretensioner (RH). 3) Connect the connector (1N) in the test harness N to the connector (AB26). 4) Connect the airbag resistor to the connector (2N) of test harness N. 5) Connect the battery ground terminal and turn the ignition switch to ON.	Does the airbag warning light illuminate for six seconds and go off?	Replace the seat belt pretensioner (RH). <Ref. to SB-17, Front Seat Belt.>	Go to step **3**.

	Step	Check	Yes	No
3	**CHECK AIRBAG REAR HARNESS (PRETENSIONER HARNESS RH).** 1) Turn the ignition switch to OFF, disconnect the battery ground cable, and wait for 60 seconds or more. 2) Disconnect the airbag resistor from test harness N. 3) Disconnect connector (AB24) from side airbag module (RH). 4) Disconnect the connector (AB33) from curtain airbag module (RH). 5) Disconnect the connectors (AB17, AB6, and AB18) from airbag control module. 6) Connect the connector (1AG) in the test harness AG to the connectors (AB6, AB17, and AB18). NOTE: For sedan models, connect test harness AH between the connectors (AB6, AB17, AB18) and (1AG). 7) Measure the resistance between connector (3AG) terminals in test harness AG. ***Connector & terminal*** ***(3AG) No. 10 — (3AG) No. 12:***	Is the resistance 1 MΩ or more?	Go to step **4**.	Replace the airbag rear harness along with body harness.
4	**CHECK AIRBAG CONTROL MODULE.** 1) Connect all connectors. 2) Clear the memory. 3) Perform the Inspection Mode. 4) Read the DTC.	Is the same DTC displayed?	Replace the airbag control module. <Ref. to AB-64, Airbag Control Module.>	Go to step **5**.
5	**CHECK FOR ANY OTHER DTC ON DISPLAY.**	Is any other DTC displayed?	Check DTC using “List of Diagnostic Trouble Code (DTC)”. <Ref. to AB(diag)-38, List of Diagnostic Trouble Code (DTC).>	Finish the diagnosis.

AS:DTC 6B BELT PRETENSIONER LH FAILURE

DTC DETECTING CONDITION:

- Seat belt pretensioner (LH) circuit is shorted.
- Pretensioner (LH) is faulty.
- Pretensioner harness is faulty.
- Airbag control module is faulty.

CAUTION:
Before performing diagnosis, refer to "CAUTION" in "General Description". <Ref. to AB(diag)-4, CAUTION, General Description.>
WIRING DIAGRAM:

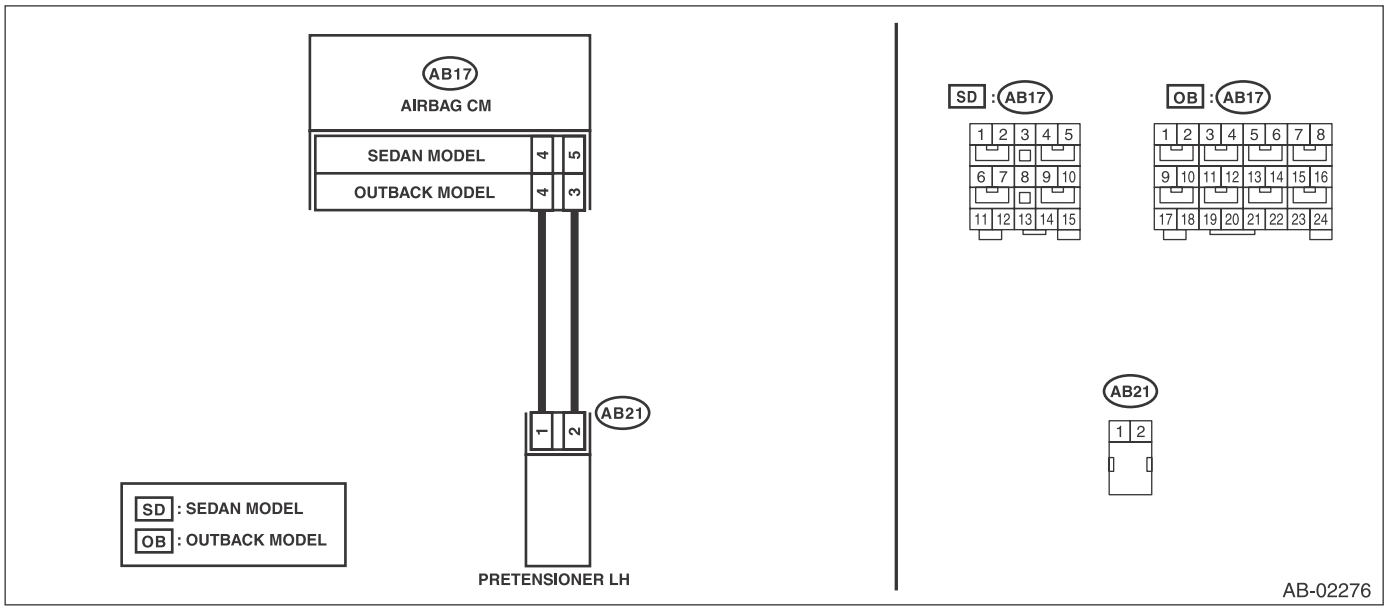

Step		Check	Yes	No
1	**CHECK POOR CONTACT OF CONNECTORS.** Check for poor contact of the connectors between the airbag control module and the seat belt pretensioner LH.	Is there poor contact?	Replace the airbag rear harness along with body harness.	Go to step **2**.
2	**CHECK SEAT BELT PRETENSIONER.** 1) Turn the ignition switch to OFF, disconnect the battery ground cable, and wait for 60 seconds or more. 2) Disconnect the connector (AB21) from seat belt pretensioner (LH). 3) Connect the connector (1N) in the test harness N to the connector (AB21). 4) Connect the airbag resistor to the connector (2N) of test harness N. 5) Connect the battery ground terminal and turn the ignition switch to ON.	Does the airbag warning light illuminate for six seconds and go off?	Replace the seat belt pretensioner (LH). <Ref. to SB-17, Front Seat Belt.>	Go to step **3**.

	Step	Check	Yes	No
3	**CHECK AIRBAG REAR HARNESS (PRETENSIONER HARNESS LH).** 1) Turn the ignition switch to OFF, disconnect the battery ground cable, and wait for 60 seconds or more. 2) Disconnect the airbag resistor from test harness N. 3) Disconnect connector (AB19) from side airbag module (LH). 4) Disconnect the connector (AB31) from curtain airbag module (LH). 5) Disconnect the connectors (AB17, AB6, and AB18) from airbag control module. 6) Connect the connector (1AG) in the test harness AG to the connectors (AB6, AB17, and AB18). NOTE: For sedan models, connect test harness AH between the connectors (AB6, AB17, AB18) and (1AG). 7) Measure the resistance between connector (3AG) terminals in test harness AG. ***Connector & terminal*** ***(3AG) No. 18 — (3AG) No. 20:***	Is the resistance 1 MΩ or more?	Go to step **4**.	Replace the airbag rear harness along with body harness.
4	**CHECK AIRBAG CONTROL MODULE.** 1) Connect all connectors. 2) Clear the memory. 3) Perform the Inspection Mode. 4) Read the DTC.	Is the same DTC displayed?	Replace the airbag control module. <Ref. to AB-64, Airbag Control Module.>	Go to step **5**.
5	**CHECK FOR ANY OTHER DTC ON DISPLAY.**	Is any other DTC displayed?	Check DTC using “List of Diagnostic Trouble Code (DTC)”. <Ref. to AB(diag)-38, List of Diagnostic Trouble Code (DTC).>	Finish the diagnosis.

AT:DTC 6D BELT PRETENSIONER RH FAILURE

DTC DETECTING CONDITION:

- Seat belt pretensioner (RH) circuit is open.
- Pretensioner (RH) is faulty.
- Pretensioner harness is faulty.
- Airbag control module is faulty.

CAUTION:
Before performing diagnosis, refer to "CAUTION" in "General Description". <Ref. to AB(diag)-4, CAUTION, General Description.>
WIRING DIAGRAM:

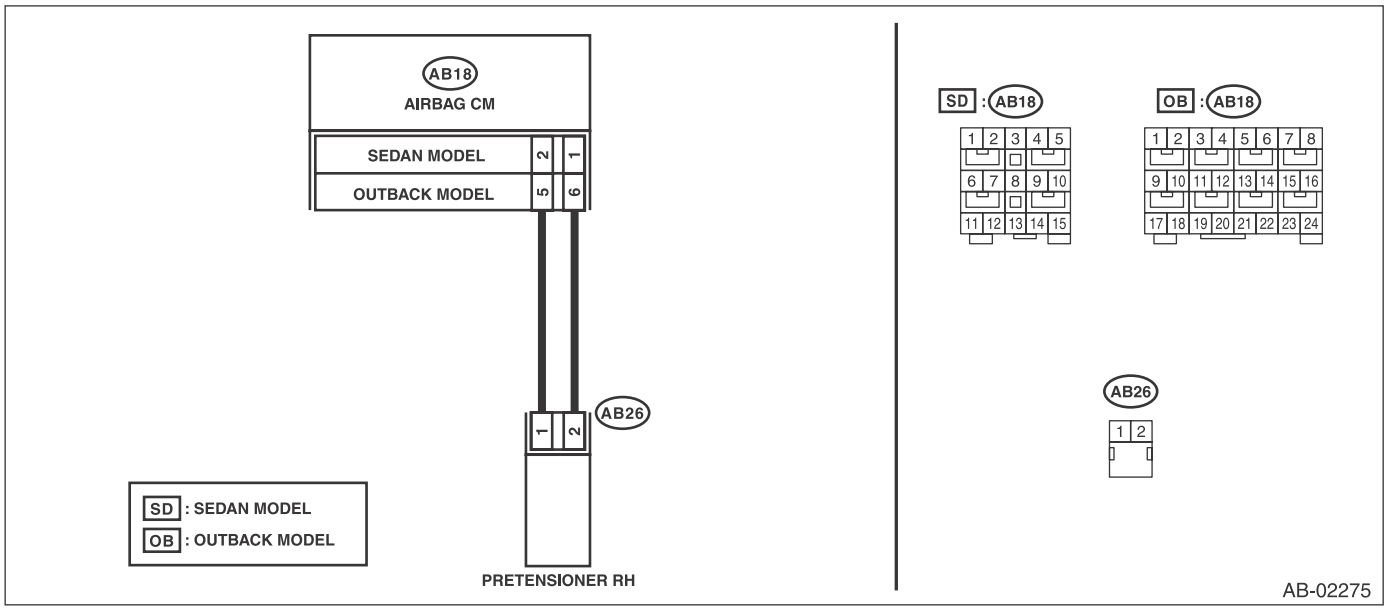

Step		Check	Yes	No
1	**CHECK POOR CONTACT OF CONNECTORS.** Check for poor contact of the connectors between the airbag control module and the seat belt pretensioner RH.	Is there poor contact?	Replace the airbag rear harness along with body harness.	Go to step **2**.
2	**CHECK SEAT BELT PRETENSIONER.** 1) Turn the ignition switch to OFF, disconnect the battery ground cable, and wait for 60 seconds or more. 2) Disconnect the connector (AB26) from seat belt pretensioner (RH). 3) Connect the connector (1N) in the test harness N to the connector (AB26). 4) Connect the airbag resistor to the connector (2N) of test harness N. 5) Connect the battery ground terminal and turn the ignition switch to ON.	Does the airbag warning light illuminate for six seconds and go off?	Replace the seat belt pretensioner (RH). <Ref. to SB-17, Front Seat Belt.>	Go to step **3**.

	Step	Check	Yes	No
3	**CHECK AIRBAG REAR HARNESS (PRETENSIONER HARNESS RH).** 1) Turn the ignition switch to OFF, disconnect the battery ground cable, and wait for 60 seconds or more. 2) Disconnect the airbag resistor from test harness N. 3) Disconnect connector (AB24) from side airbag module (RH). 4) Disconnect the connector (AB33) from curtain airbag module (RH). 5) Disconnect the connectors (AB17, AB6, and AB18) from airbag control module. 6) Connect the connector (1AG) in the test harness AG to the connectors (AB6, AB17, and AB18). NOTE: For sedan models, connect test harness AH between the connectors (AB6, AB17, AB18) and (1AG). 7) Measure the resistance between connector (3AG) in the test harness AG and connector (2N) in the test harness N. ***Connector & terminal*** ***(3AG) No. 10 — (2N) No. 2:*** ***(3AG) No. 12 — (2N) No. 1:***	Is the resistance less than 10 Ω?	Go to step **4**.	Replace the airbag rear harness along with body harness.
4	**CHECK AIRBAG CONTROL MODULE.** 1) Connect all connectors. 2) Clear the memory. 3) Perform the Inspection Mode. 4) Read the DTC.	Is the same DTC displayed?	Replace the airbag control module. <Ref. to AB-64, Airbag Control Module.>	Go to step **5**.
5	**CHECK FOR ANY OTHER DTC ON DISPLAY.**	Is any other DTC displayed?	Check DTC using “List of Diagnostic Trouble Code (DTC)”. <Ref. to AB(diag)-38, List of Diagnostic Trouble Code (DTC).>	Finish the diagnosis.

AU:DTC 6E BELT PRETENSIONER LH FAILURE

DTC DETECTING CONDITION:

- Seat belt pretensioner (LH) circuit is open.
- Pretensioner (LH) is faulty.
- Pretensioner harness is faulty.
- Airbag control module is faulty.

CAUTION:
Before performing diagnosis, refer to "CAUTION" in "General Description". <Ref. to AB(diag)-4, CAUTION, General Description.>
WIRING DIAGRAM:

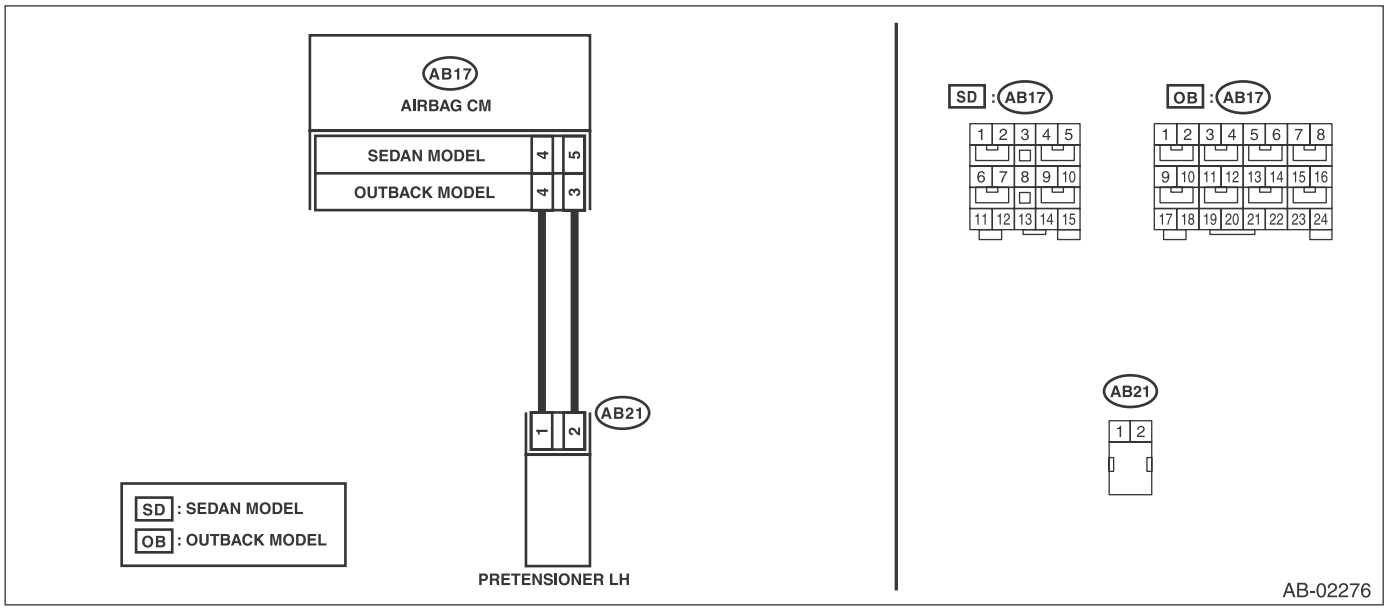

Step		Check	Yes	No
1	**CHECK POOR CONTACT OF CONNECTORS.** Check for poor contact of the connectors between the airbag control module and the seat belt pretensioner LH.	Is there poor contact?	Replace the airbag rear harness along with body harness.	Go to step **2**.
2	**CHECK SEAT BELT PRETENSIONER.** 1) Turn the ignition switch to OFF, disconnect the battery ground cable, and wait for 60 seconds or more. 2) Disconnect the connector (AB21) from seat belt pretensioner (LH). 3) Connect the connector (1N) in the test harness N to the connector (AB21). 4) Connect the airbag resistor to the connector (2N) of test harness N. 5) Connect the battery ground terminal and turn the ignition switch to ON.	Does the airbag warning light illuminate for six seconds and go off?	Replace the seat belt pretensioner (LH). <Ref. to SB-17, Front Seat Belt.>	Go to step **3**.

	Step	Check	Yes	No
3	**CHECK AIRBAG REAR HARNESS (PRETENSIONER HARNESS LH).** 1) Turn the ignition switch to OFF, disconnect the battery ground cable, and wait for 60 seconds or more. 2) Disconnect the airbag resistor from test harness N. 3) Disconnect connector (AB19) from side airbag module (LH). 4) Disconnect the connector (AB31) from curtain airbag module (LH). 5) Disconnect the connectors (AB17, AB6, and AB18) from airbag control module. 6) Connect the connector (1AG) in the test harness AG to the connectors (AB6, AB17, and AB18). NOTE: For sedan models, connect test harness AH between the connectors (AB6, AB17, AB18) and (1AG). 7) Measure the resistance between connector (3AG) in the test harness AG and connector (2N) in the test harness N. ***Connector & terminal*** ***(3AG) No. 18 — (2N) No. 1:*** ***(3AG) No. 20 — (2N) No. 2:***	Is the resistance less than 10 Ω?	Go to step **4**.	Replace the airbag rear harness along with body harness.
4	**CHECK AIRBAG CONTROL MODULE.** 1) Connect all connectors. 2) Clear the memory. 3) Perform the Inspection Mode. 4) Read the DTC.	Is the same DTC displayed?	Replace the airbag control module. <Ref. to AB-64, Airbag Control Module.>	Go to step **5**.
5	**CHECK FOR ANY OTHER DTC ON DISPLAY.**	Is any other DTC displayed?	Check DTC using "List of Diagnostic Trouble Code (DTC)". <Ref. to AB(diag)-38, List of Diagnostic Trouble Code (DTC).>	Finish the diagnosis.

AV:DTC 71 DRIVER'S AIRBAG FAILURE

DTC DETECTING CONDITION:

- Airbag main harness circuit is shorted to ground.
- Airbag module harness (driver's side) circuit is shorted to ground.
- Roll connector circuit is shorted to ground.
- Driver's airbag module is faulty.
- Airbag control module is faulty.

CAUTION:

Before performing diagnosis, refer to "CAUTION" in "General Description". <Ref. to AB(diag)-4, CAUTION, General Description.>

NOTE:

Prior to starting work, prepare two airbag resistors (98299PA040).

WIRING DIAGRAM:

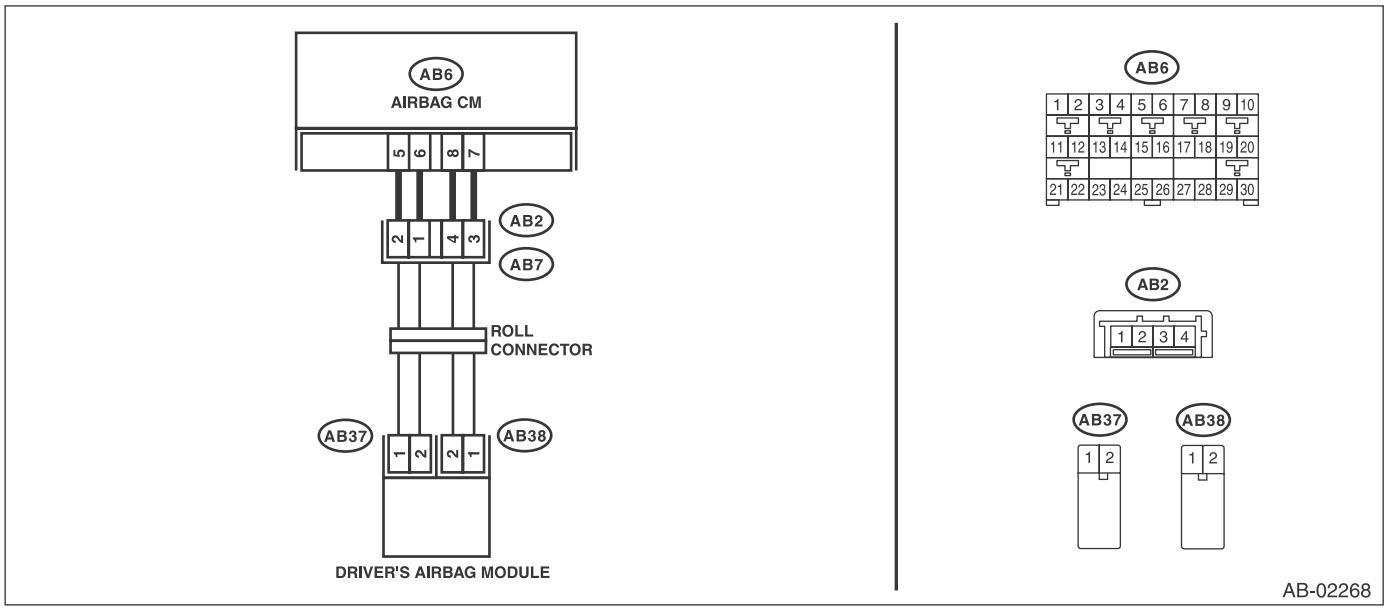

Step		Check	Yes	No
1	**CHECK POOR CONTACT OF CONNECTORS.** Check for poor contact of the connectors between the airbag control module and the driver's airbag module.	Is there poor contact?	Replace the airbag harness.	Go to step **2**.
2	**CHECK DRIVER'S AIRBAG MODULE.** 1) Turn the ignition switch to OFF, disconnect the battery ground cable, and wait for 60 seconds or more. 2) Remove the driver's airbag module. 3) Connect the connector (1N) in the test harness N to the connector (AB38). 4) Connect the airbag resistor to the connector (2N) of test harness N. 5) Connect the connector (1Q) in the test harness Q to connector (AB37). 6) Connect the airbag resistor to the connector (2Q) in the test harness Q. 7) Connect the battery ground terminal and turn the ignition switch to ON.	Does the airbag warning light illuminate for six seconds and go off?	Replace the driver's airbag module. <Ref. to AB-31, Driver's Airbag Module.>	Go to step **3**.

Step		Check	Yes	No
3	**CHECK ROLL CONNECTOR.** 1) Turn the ignition switch to OFF, disconnect the battery ground cable, and wait for 60 seconds or more. 2) Remove the instrument panel lower cover and column cover, and disconnect the connector (AB7) from (AB2). 3) Disconnect the airbag resistor from the connector (2N) in test harness N and from the connector (2Q) in test harness Q. 4) Measure the resistance between connector (2N) in the test harness N and chassis ground. ***Connector & terminal*** ***(2N) No. 1 — Chassis ground:*** ***(2N) No. 2 — Chassis ground:***	Is the resistance 1 MΩ or more?	Go to step **4**.	Replace the roll connector. <Ref. to AB-89, Roll Connector.>
4	**CHECK AIRBAG MAIN HARNESS (DRIVER'S AIRBAG HARNESS).** 1) Disconnect the test harness N from connector (AB38). 2) Disconnect test harness Q from connector (AB37). 3) Remove the console front panel and disconnect the connector (AB9). 4) Disconnect the connectors (AB6, AB17, AB18) from the airbag control module, and connect the connector (1AG) in the test harness AG. NOTE: For sedan models, connect test harness AH between the connectors (AB6, AB17, AB18) and (1AG). 5) Measure the resistance between connector (3AG) in the test harness AG and chassis ground. ***Connector & terminal*** ***(3AG) No. 2 — Chassis ground:*** ***(3AG) No. 4 — Chassis ground:***	Is the resistance 1 MΩ or more?	Go to step **5**.	Replace the airbag main harness along with body harness.
5	**CHECK AIRBAG CONTROL MODULE.** 1) Connect all connectors. 2) Clear the memory. 3) Perform the Inspection Mode. 4) Read the DTC.	Is the same DTC displayed?	Replace the airbag control module. <Ref. to AB-64, Airbag Control Module.>	Go to step **6**.
6	**CHECK FOR ANY OTHER DTC ON DISPLAY.**	Is any other DTC displayed?	Check DTC using "List of Diagnostic Trouble Code (DTC)". <Ref. to AB(diag)-38, List of Diagnostic Trouble Code (DTC).>	Finish the diagnosis.

AW:DTC 72 PASSENGER'S AIRBAG FAILURE

DTC DETECTING CONDITION:

- Airbag main harness circuit is shorted to ground.
- Airbag module harness (passenger's side) circuit is shorted to ground.
- Passenger's airbag module is faulty.
- Airbag control module is faulty.

CAUTION:
Before performing diagnosis, refer to "CAUTION" in "General Description". <Ref. to AB(diag)-4, CAUTION, General Description.>

NOTE:
Prior to starting work, prepare two airbag resistors (98299PA040).

WIRING DIAGRAM:

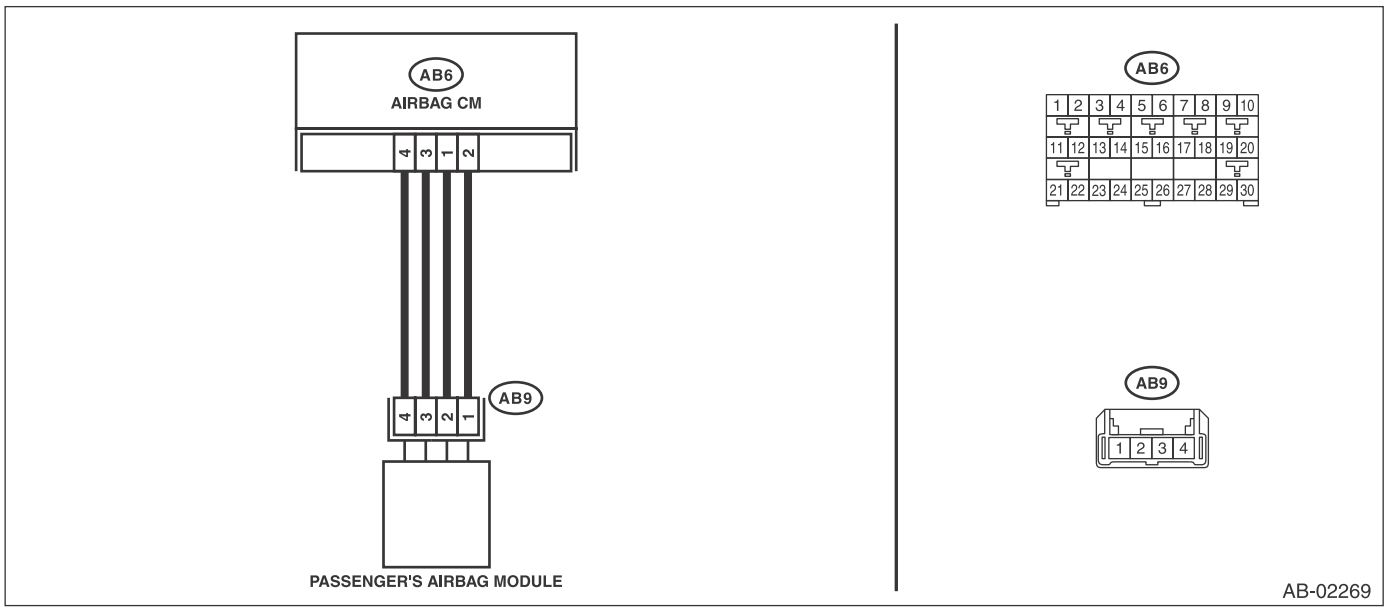

Step		Check	Yes	No
1	**CHECK POOR CONTACT OF CONNECTORS.** Check for poor contact of the connectors between the airbag control module and the passenger's airbag module.	Is there poor contact?	Replace the airbag harness.	Go to step **2**.
2	**CHECK PASSENGER'S AIRBAG MODULE.** 1) Turn the ignition switch to OFF, disconnect the battery ground cable, and wait for 60 seconds or more. 2) Remove the console front panel and disconnect the connector (AB9). 3) Connect the connector (1P) in the test harness P to connector (AB9). 4) Connect the airbag resistor to the connectors (2P) and (3P) of test harness P. 5) Connect the battery ground terminal and turn the ignition switch to ON.	Does the airbag warning light illuminate for six seconds and go off?	Replace the passenger's airbag module. <Ref. to AB-33, Passenger's Airbag Module.>	Go to step **3**.

	Step	Check	Yes	No
3	**CHECK AIRBAG MAIN HARNESS (PASSENGER'S AIRBAG HARNESS).** 1) Turn the ignition switch to OFF, disconnect the battery ground cable, and wait for 60 seconds or more. 2) Disconnect the airbag resistor from the connectors (2P) and (3P) of test harness P. 3) Remove the instrument panel lower cover and column cover, and disconnect the connector (AB7) from (AB2). 4) Disconnect the connectors (AB6, AB17, and AB18) from the airbag control module, and connect the connector (1AG) in the test harness AG. NOTE: For sedan models, connect test harness AH between the connectors (AB6, AB17, AB18) and (1AG). 5) Measure the resistance between connector (3AG) in the test harness AG and chassis ground. ***Connector & terminal*** ***(3AG) No. 8 — Chassis ground:*** ***(3AG) No. 6 — Chassis ground:***	Is the resistance 1 MΩ or more?	Go to step **4**.	Replace the airbag main harness along with body harness.
4	**CHECK AIRBAG CONTROL MODULE.** 1) Connect all connectors. 2) Clear the memory. 3) Perform the Inspection Mode. 4) Read the DTC.	Is the same DTC displayed?	Replace the airbag control module. <Ref. to AB-64, Airbag Control Module.>	Go to step **5**.
5	**CHECK FOR ANY OTHER DTC ON DISPLAY.**	Is any other DTC displayed?	Check DTC using "List of Diagnostic Trouble Code (DTC)". <Ref. to AB(diag)-38, List of Diagnostic Trouble Code (DTC).>	Finish the diagnosis.

AX:DTC 75 DRIVER'S AIRBAG FAILURE

DTC DETECTING CONDITION:

- Airbag main harness circuit is shorted to power supply.
- Airbag module harness (driver's side) circuit is shorted to power supply.
- Roll connector is shorted to power supply.
- Driver's airbag module is faulty.
- Airbag control module is faulty.

CAUTION:

Before performing diagnosis, refer to "CAUTION" in "General Description". <Ref. to AB(diag)-4, CAUTION, General Description.>

NOTE:

Prior to starting work, prepare two airbag resistors (98299PA040).

WIRING DIAGRAM:

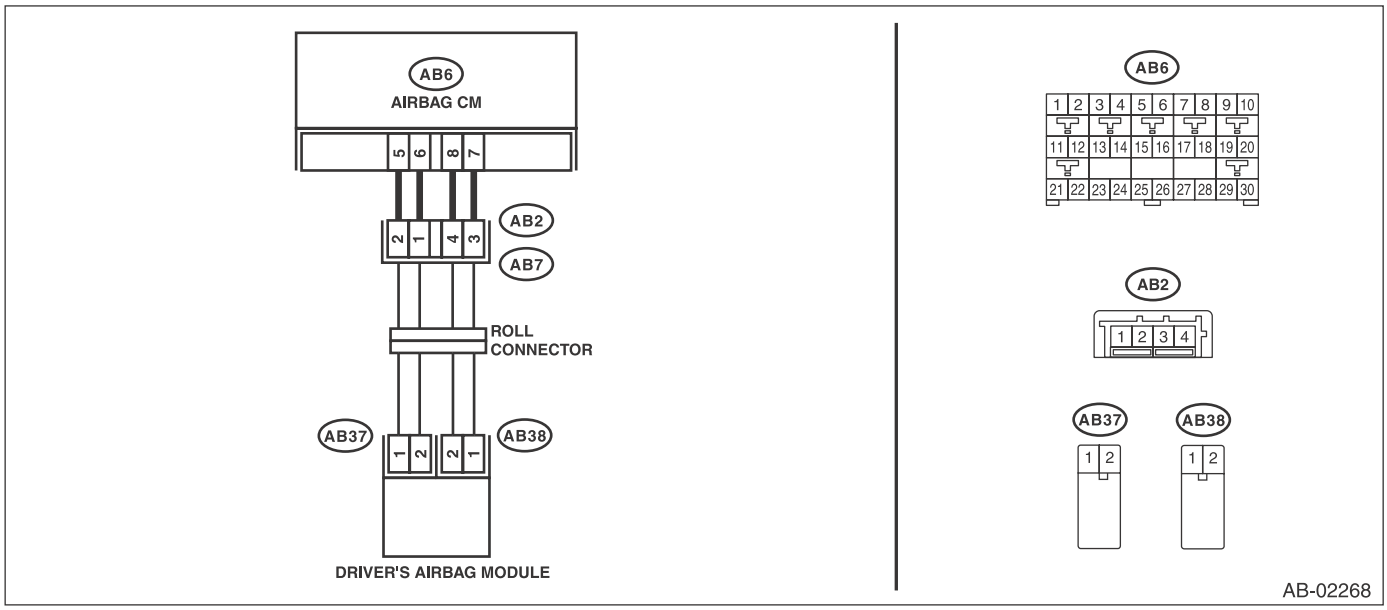

Step		Check	Yes	No
1	**CHECK POOR CONTACT OF CONNECTORS.** Check for poor contact of the connectors between the airbag control module and the driver's airbag module.	Is there poor contact?	Replace the airbag harness.	Go to step **2**.
2	**CHECK DRIVER'S AIRBAG MODULE.** 1) Turn the ignition switch to OFF, disconnect the battery ground cable, and wait for 60 seconds or more. 2) Remove the driver's airbag module. 3) Connect the connector (1N) in the test harness N to the connector (AB38). 4) Connect the airbag resistor to the connector (2N) of test harness N. 5) Connect the connector (1Q) in the test harness Q to connector (AB37). 6) Connect the airbag resistor to the connector (2Q) in the test harness Q. 7) Connect the battery ground terminal and turn the ignition switch to ON.	Does the airbag warning light illuminate for six seconds and go off?	Replace the driver's airbag module. <Ref. to AB-31, Driver's Airbag Module.>	Go to step **3**.

	Step	Check	Yes	No
3	**CHECK ROLL CONNECTOR.** 1) Turn the ignition switch to OFF, disconnect the battery ground cable, and wait for 60 seconds or more. 2) Remove the instrument panel lower cover and column cover, and disconnect the connector (AB7) from (AB2). 3) Disconnect the airbag resistor from the connector (2N) in test harness N and from the connector (2Q) in test harness Q. 4) Measure the voltage between connector (2N) in the test harness N and chassis ground. ***Connector & terminal*** ***(2N) No. 1 (+) — Chassis ground (–):*** ***(2N) No. 2 (+) — Chassis ground (–):***	Is the voltage less than 1 V?	Go to step **4**.	Replace the roll connector. <Ref. to AB-89, Roll Connector.>
4	**CHECK AIRBAG MAIN HARNESS (DRIVER'S AIRBAG HARNESS).** 1) Disconnect the test harness N from connector (AB38). 2) Disconnect test harness Q from connector (AB37). 3) Remove the console front panel and disconnect the connector (AB9). 4) Disconnect the connectors (AB6, AB17, and AB18) from the airbag control module, and connect the connector (1AG) in the test harness AG. NOTE: For sedan models, connect test harness AH between the connectors (AB6, AB17, AB18) and (1AG). 5) Measure the voltage between connector (3AG) in the test harness AG and chassis ground. ***Connector & terminal*** ***(3AG) No. 2 (+) — Chassis ground (–):*** ***(3AG) No. 4 (+) — Chassis ground (–):***	Is the voltage less than 1 V?	Go to step **5**.	Replace the airbag main harness along with body harness.
5	**CHECK AIRBAG CONTROL MODULE.** 1) Connect all connectors. 2) Clear the memory. 3) Perform the Inspection Mode. 4) Read the DTC.	Is the same DTC displayed?	Replace the airbag control module. <Ref. to AB-64, Airbag Control Module.>	Go to step **6**.
6	**CHECK FOR ANY OTHER DTC ON DISPLAY.**	Is any other DTC displayed?	Check DTC using "List of Diagnostic Trouble Code (DTC)". <Ref. to AB(diag)-38, List of Diagnostic Trouble Code (DTC).>	Finish the diagnosis.

AY:DTC 76 PASSENGER'S AIRBAG FAILURE

DTC DETECTING CONDITION:

- Airbag main harness circuit is shorted to power supply.
- Airbag module harness (passenger's side) circuit is shorted to power supply.
- Passenger's airbag module is faulty.
- Airbag control module is faulty.

CAUTION:
Before performing diagnosis, refer to "CAUTION" in "General Description". <Ref. to AB(diag)-4, CAUTION, General Description.>

NOTE:
Prior to starting work, prepare two airbag resistors (98299PA040).

WIRING DIAGRAM:

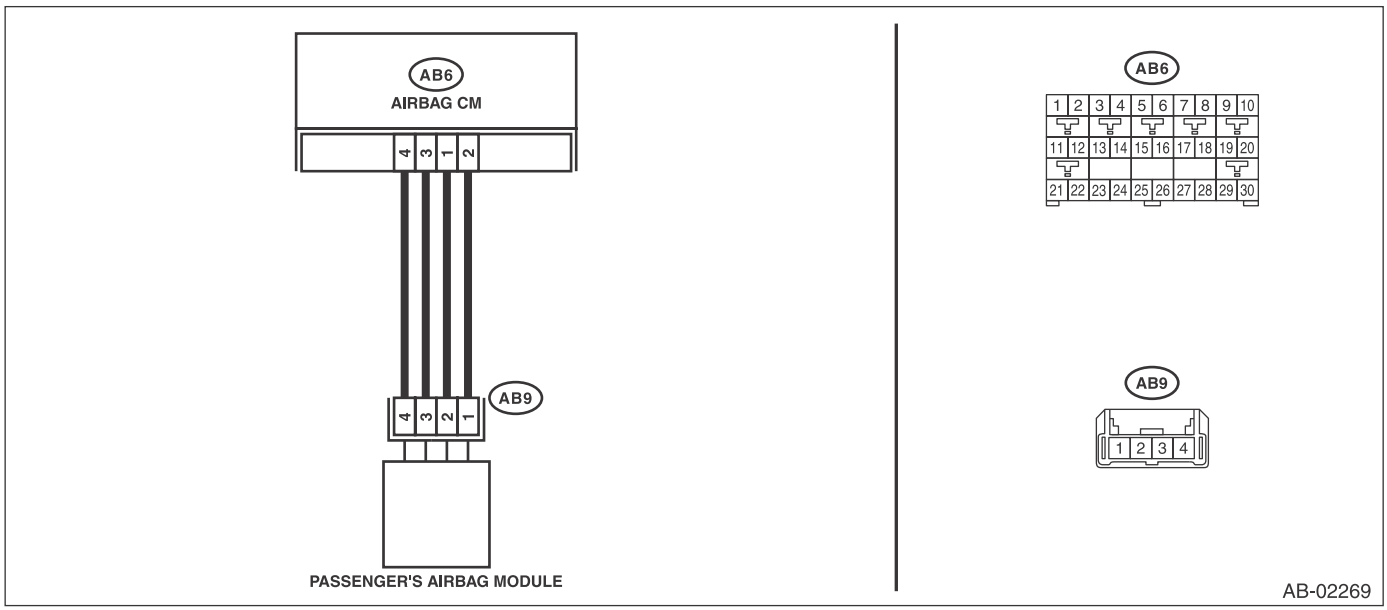

	Step	Check	Yes	No
1	**CHECK POOR CONTACT OF CONNECTORS.** Check for poor contact of the connectors between the airbag control module and the passenger's airbag module.	Is there poor contact?	Replace the airbag harness along with chassis harness.	Go to step **2**.
2	**CHECK PASSENGER'S AIRBAG MODULE.** 1) Turn the ignition switch to OFF, disconnect the battery ground cable, and wait for 60 seconds or more. 2) Remove the console front panel and disconnect the connector (AB9). 3) Connect the connector (1P) in the test harness P to connector (AB9). 4) Connect the airbag resistor to the connectors (2P) and (3P) of test harness P. 5) Connect the battery ground terminal and turn the ignition switch to ON.	Does the airbag warning light illuminate for six seconds and go off?	Replace the passenger's airbag module. <Ref. to AB-33, Passenger's Airbag Module.>	Go to step **3**.

	Step	Check	Yes	No
3	**CHECK AIRBAG MAIN HARNESS (PASSENGER'S AIRBAG HARNESS).** 1) Turn the ignition switch to OFF, disconnect the battery ground cable, and wait for 60 seconds or more. 2) Disconnect the airbag resistor from the connectors (2P) and (3P) of test harness P. 3) Remove the instrument panel lower cover and column cover, and disconnect the connector (AB7) from (AB2). 4) Disconnect the connectors (AB6, AB17, and AB18) from the airbag control module, and connect the connector (1AG) in the test harness AG. NOTE: For sedan models, connect test harness AH between the connectors (AB6, AB17, AB18) and (1AG). 5) Measure the voltage between connector (3AG) in the test harness AG and chassis ground. ***Connector & terminal*** ***(3AG) No. 8 (+) — Chassis ground (–):*** ***(3AG) No. 6 (+) — Chassis ground (–):***	Is the voltage less than 1 V?	Go to step **4**.	Replace the airbag main harness along with body harness.
4	**CHECK AIRBAG CONTROL MODULE.** 1) Connect all connectors. 2) Clear the memory. 3) Perform the Inspection Mode. 4) Read the DTC.	Is the same DTC displayed?	Replace the airbag control module. <Ref. to AB-64, Airbag Control Module.>	Go to step **5**.
5	**CHECK FOR ANY OTHER DTC ON DISPLAY.**	Is any other DTC displayed?	Check DTC using "List of Diagnostic Trouble Code (DTC)". <Ref. to AB(diag)-38, List of Diagnostic Trouble Code (DTC).>	Finish the diagnosis.

AZ:DTC 7A DRIVER'S AIRBAG FAILURE

DTC DETECTING CONDITION:

- Airbag main harness circuit is shorted.
- Airbag module harness (driver's side) circuit is shorted.
- Roll connector circuit is shorted.
- Driver's airbag module is faulty.
- Airbag control module is faulty.

CAUTION:

Before performing diagnosis, refer to "CAUTION" in "General Description". <Ref. to AB(diag)-4, CAUTION, General Description.>

NOTE:

Prior to starting work, prepare two airbag resistors (98299PA040).

WIRING DIAGRAM:

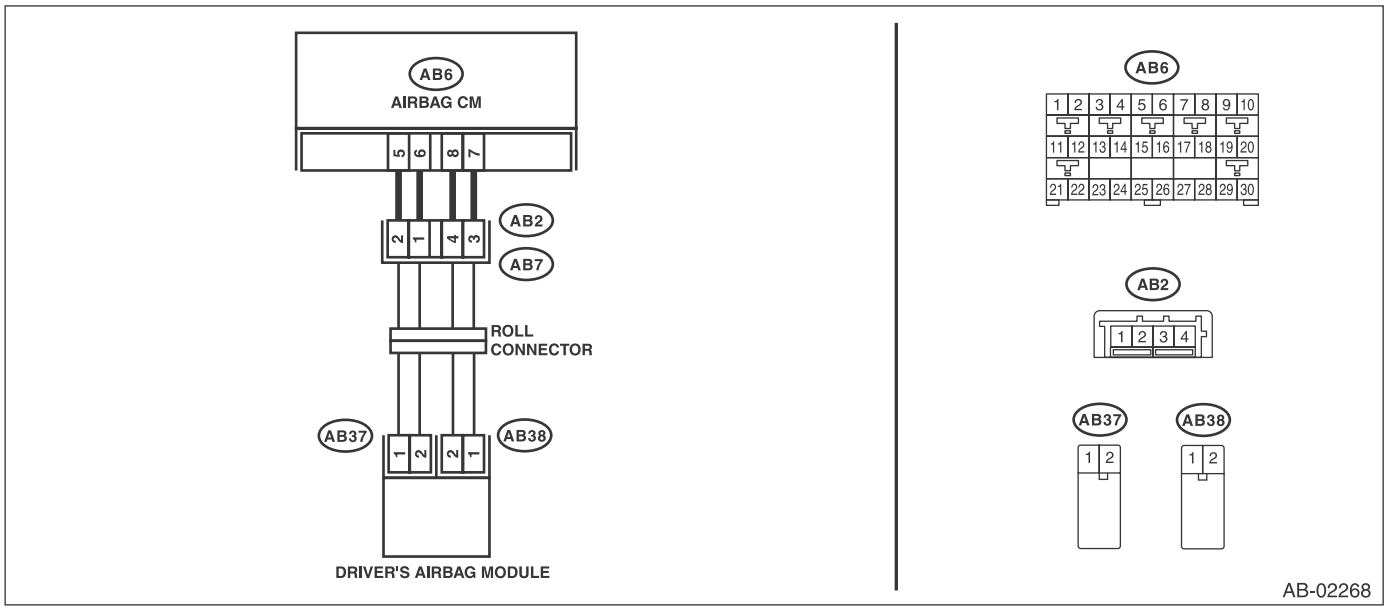

Step		Check	Yes	No
1	**CHECK POOR CONTACT OF CONNECTORS.** Check for poor contact of the connectors between the airbag control module and the driver's airbag module.	Is there poor contact?	Replace the airbag harness.	Go to step **2**.
2	**CHECK DRIVER'S AIRBAG MODULE.** 1) Turn the ignition switch to OFF, disconnect the battery ground cable, and wait for 60 seconds or more. 2) Remove the driver's airbag module. 3) Connect the connector (1N) in the test harness N to the connector (AB38). 4) Connect the airbag resistor to the connector (2N) of test harness N. 5) Connect the connector (1Q) in the test harness Q to connector (AB37). 6) Connect the airbag resistor to the connector (2Q) in the test harness Q. 7) Connect the battery ground terminal and turn the ignition switch to ON.	Does the airbag warning light illuminate for six seconds and go off?	Replace the driver's airbag module. <Ref. to AB-31, Driver's Airbag Module.>	Go to step **3**.

	Step	Check	Yes	No
3	**CHECK ROLL CONNECTOR AND AIRBAG MAIN HARNESS (DRIVER'S AIRBAG HARNESS).** 1) Turn the ignition switch to OFF, disconnect the battery ground cable, and wait for 60 seconds or more. 2) Remove the console front panel and disconnect the connector (AB9). 3) Disconnect the airbag resistor from the connector (2N) in test harness N and from the connector (2Q) in test harness Q. 4) Disconnect the connectors (AB6, AB17, and AB18) from the airbag control module, and connect the connector (1AG) in the test harness AG. NOTE: For sedan models, connect test harness AH between the connectors (AB6, AB17, AB18) and (1AG). 5) Measure the resistance between connector (2N) terminals in test harness N. ***Connector & terminal*** ***(2N) No. 1 — (2N) No. 2:***	Is the resistance 1 MΩ or more?	Go to step **5**.	Go to step **4**.
4	**CHECK AIRBAG MAIN HARNESS (DRIVER'S AIRBAG HARNESS).** 1) Remove the instrument panel lower cover and column cover, and disconnect the connector (AB7) from (AB2). 2) Disconnect test harness Q from connector (AB37). 3) Measure the resistance between connector (3AG) terminals in test harness AG. ***Connector & terminal*** ***(3AG) No. 2 — (3AG) No. 4:***	Is the resistance 1 MΩ or more?	Replace the roll connector. <Ref. to AB-89, Roll Connector.>	Replace the airbag main harness along with body harness.
5	**CHECK AIRBAG CONTROL MODULE.** 1) Connect all connectors. 2) Clear the memory. 3) Perform the Inspection Mode. 4) Read the DTC.	Is the same DTC displayed?	Replace the airbag control module. <Ref. to AB-64, Airbag Control Module.>	Go to step **6**.
6	**CHECK FOR ANY OTHER DTC ON DISPLAY.**	Is any other DTC displayed?	Check DTC using "List of Diagnostic Trouble Code (DTC)". <Ref. to AB(diag)-38, List of Diagnostic Trouble Code (DTC).>	Finish the diagnosis.

BA:DTC 7B PASSENGER'S AIRBAG FAILURE

DTC DETECTING CONDITION:

- Airbag main harness circuit is shorted.
- Airbag module harness (passenger's side) circuit is shorted.
- Passenger's airbag module is faulty.
- Airbag control module is faulty.

CAUTION:
Before performing diagnosis, refer to "CAUTION" in "General Description". <Ref. to AB(diag)-4, CAUTION, General Description.>

NOTE:
Prior to starting work, prepare two airbag resistors (98299PA040).

WIRING DIAGRAM:

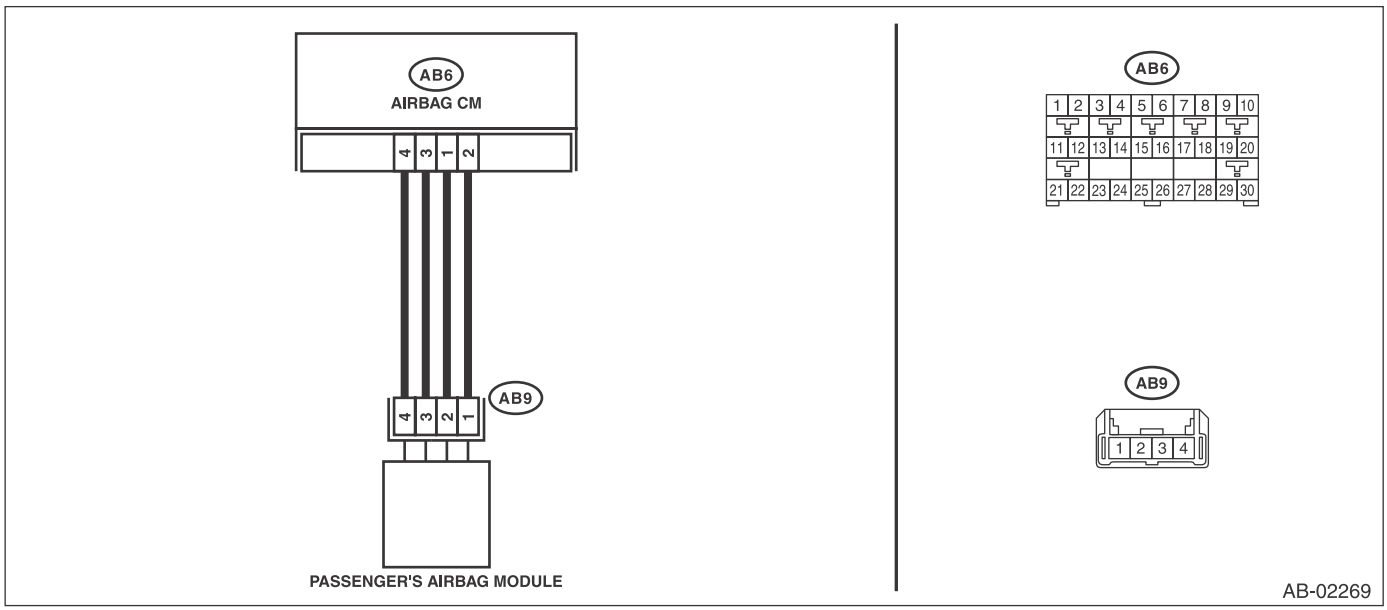

Step		Check	Yes	No
1	**CHECK POOR CONTACT OF CONNECTORS.** Check for poor contact of the connectors between the airbag control module and the passenger's airbag module.	Is there poor contact?	Replace the airbag harness.	Go to step **2**.
2	**CHECK PASSENGER'S AIRBAG MODULE.** 1) Turn the ignition switch to OFF, disconnect the battery ground cable, and wait for 60 seconds or more. 2) Remove the console front panel and disconnect the connector (AB9). 3) Connect the connector (1P) in the test harness P to connector (AB9). 4) Connect the airbag resistor to the connectors (2P) and (3P) of test harness P. 5) Connect the battery ground terminal and turn the ignition switch to ON.	Does the airbag warning light illuminate for six seconds and go off?	Replace the passenger's airbag module. <Ref. to AB-33, Passenger's Airbag Module.>	Go to step **3**.

Step		Check	Yes	No
3	**CHECK AIRBAG MAIN HARNESS (PASSENGER'S AIRBAG HARNESS).** 1) Turn the ignition switch to OFF, disconnect the battery ground cable, and wait for 60 seconds or more. 2) Disconnect the airbag resistor from the connectors (2P) and (3P) of test harness P. 3) Remove the instrument panel lower cover and column cover, and disconnect the connector (AB7) from (AB2). 4) Disconnect the connectors (AB6, AB17, and AB18) from the airbag control module, and connect the connector (1AG) in the test harness AG. NOTE: For sedan models, connect test harness AH between the connectors (AB6, AB17, AB18) and (1AG). 5) Measure the resistance between connector (3AG) terminals in test harness AG. ***Connector & terminal (3AG) No. 6 — (3AG) No. 8:***	Is the resistance 1 MΩ or more?	Go to step **4**.	Replace the airbag main harness along with body harness.
4	**CHECK AIRBAG CONTROL MODULE.** 1) Connect all connectors. 2) Clear the memory. 3) Perform the Inspection Mode. 4) Read the DTC.	Is the same DTC displayed?	Replace the airbag control module. <Ref. to AB-64, Airbag Control Module.>	Go to step **5**.
5	**CHECK FOR ANY OTHER DTC ON DISPLAY.**	Is any other DTC displayed?	Check DTC using "List of Diagnostic Trouble Code (DTC)". <Ref. to AB(diag)-38, List of Diagnostic Trouble Code (DTC).>	Finish the diagnosis.

BB:DTC 7D DRIVER'S AIRBAG FAILURE

DTC DETECTING CONDITION:

- Airbag main harness circuit is open.
- Airbag module harness (driver's side) circuit is open.
- Roll connector circuit is open.
- Driver's airbag module is faulty.
- Airbag control module is faulty.

CAUTION:

Before performing diagnosis, refer to "CAUTION" in "General Description". <Ref. to AB(diag)-4, CAUTION, General Description.>

NOTE:

Prior to starting work, prepare two airbag resistors (98299PA040).

WIRING DIAGRAM:

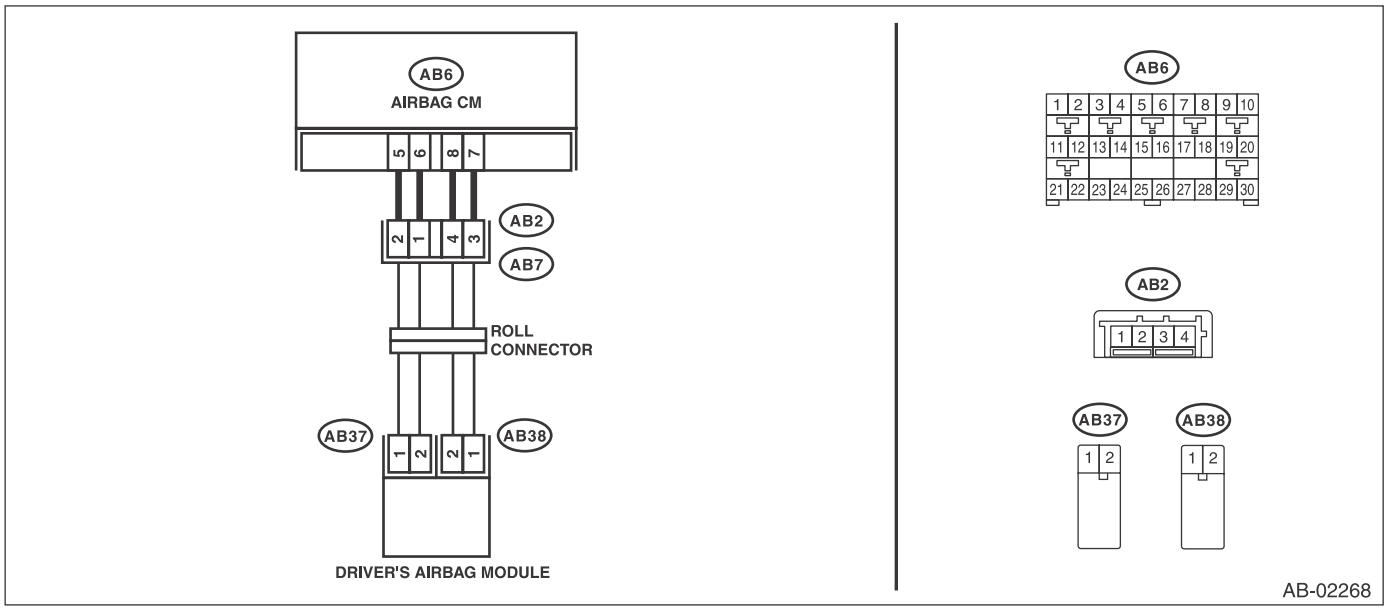

Step		Check	Yes	No
1	**CHECK POOR CONTACT OF CONNECTORS.** Check for poor contact of the connectors between the airbag control module and the driver's airbag module.	Is there poor contact?	Replace the airbag harness.	Go to step **2**.
2	**CHECK DRIVER'S AIRBAG MODULE.** 1) Turn the ignition switch to OFF, disconnect the battery ground cable, and wait for 60 seconds or more. 2) Remove the driver's airbag module. 3) Connect the connector (1N) in the test harness N to the connector (AB38). 4) Connect the airbag resistor to the connector (2N) of test harness N. 5) Connect the connector (1Q) in the test harness Q to connector (AB37). 6) Connect the airbag resistor to the connector (2Q) in the test harness Q. 7) Connect the battery ground terminal and turn the ignition switch to ON.	Does the airbag warning light illuminate for six seconds and go off?	Replace the driver's airbag module. <Ref. to AB-31, Driver's Airbag Module.>	Go to step **3**.

	Step	Check	Yes	No
3	**CHECK ROLL CONNECTOR AND AIRBAG MAIN HARNESS (DRIVER'S AIRBAG HARNESS).** 1) Turn the ignition switch to OFF, disconnect the battery ground cable, and wait for 60 seconds or more. 2) Remove the console front panel and disconnect the connector (AB9). 3) Disconnect the airbag resistor from the connector (2N) in test harness N. 4) Disconnect the airbag resistor from the connector (2Q) of test harness Q. 5) Disconnect the connectors (AB17, AB6, and AB18) from airbag control module. 6) Measure the resistance between connector (2N) terminals in test harness N. ***Connector & terminal*** ***(2N) No. 1 — (2N) No. 2:***	Is the resistance less than 10 Ω?	Go to step **5**.	Go to step **4**.
4	**CHECK ROLL CONNECTOR.** 1) Remove the instrument panel lower cover and column cover, and disconnect the connector (AB7) from (AB2). 2) Measure the resistance between connector (2N) terminals in test harness N. ***Connector & terminal*** ***(2N) No. 1 — (2N) No. 2:***	Is the resistance less than 10 Ω?	Replace the airbag main harness along with body harness.	Replace the roll connector. <Ref. to AB-89, Roll Connector.>
5	**CHECK AIRBAG CONTROL MODULE.** 1) Connect all connectors. 2) Clear the memory. 3) Perform the Inspection Mode. 4) Read the DTC.	Is the same DTC displayed?	Replace the airbag control module. <Ref. to AB-64, Airbag Control Module.>	Go to step **6**.
6	**CHECK FOR ANY OTHER DTC ON DISPLAY.**	Is any other DTC displayed?	Check DTC using "List of Diagnostic Trouble Code (DTC)". <Ref. to AB(diag)-38, List of Diagnostic Trouble Code (DTC).>	Finish the diagnosis.

BC:DTC 7E PASSENGER'S AIRBAG FAILURE

DTC DETECTING CONDITION:

- Airbag main harness circuit is open.
- Airbag module harness (passenger's side) circuit is open.
- Passenger's airbag module is faulty.
- Airbag control module is faulty.

CAUTION:
Before performing diagnosis, refer to "CAUTION" in "General Description". <Ref. to AB(diag)-4, CAUTION, General Description.>

NOTE:
Prior to starting work, prepare two airbag resistors (98299PA040).

WIRING DIAGRAM:

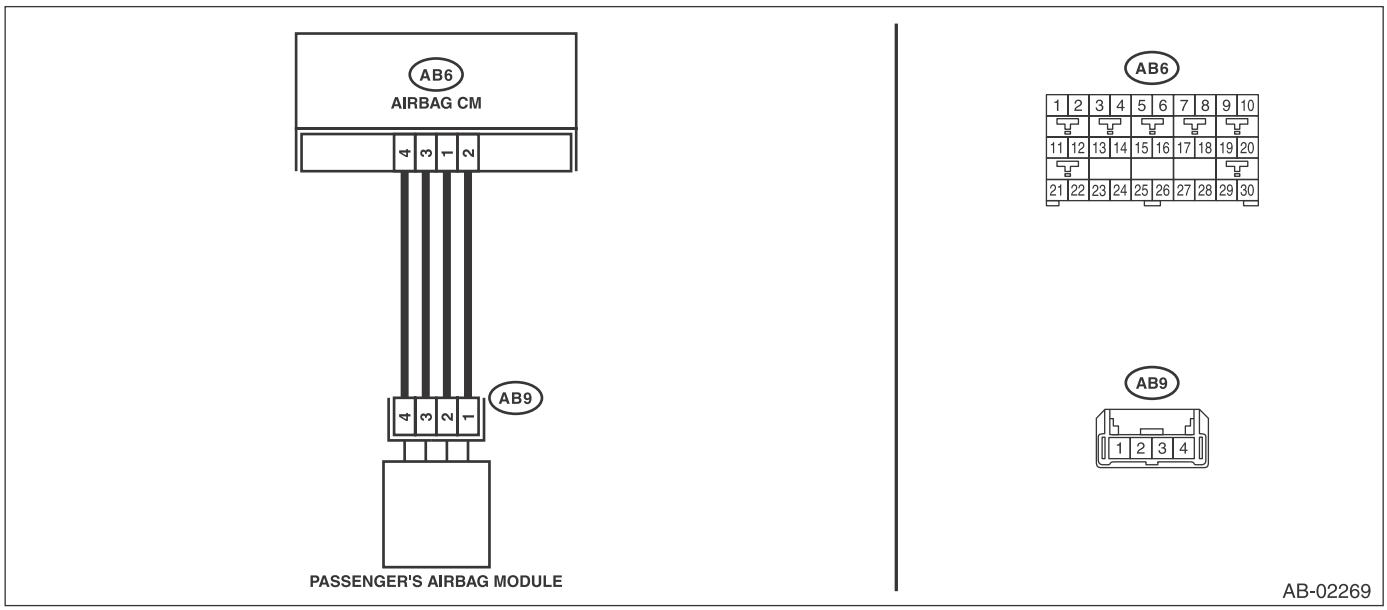

Step		Check	Yes	No
1	**CHECK POOR CONTACT OF CONNECTORS.** Check for poor contact of the connectors between the airbag control module and the passenger's airbag module.	Is there poor contact?	Replace the airbag harness.	Go to step **2**.
2	**CHECK PASSENGER'S AIRBAG MODULE.** 1) Turn the ignition switch to OFF, disconnect the battery ground cable, and wait for 60 seconds or more. 2) Remove the console front panel and disconnect the connector (AB9). 3) Connect the connector (1P) in the test harness P to connector (AB9). 4) Connect the airbag resistor to the connectors (2P) and (3P) of test harness P. 5) Connect the battery ground terminal and turn the ignition switch to ON.	Does the airbag warning light illuminate for six seconds and go off?	Replace the passenger's airbag module. <Ref. to AB-33, Passenger's Airbag Module.>	Go to step **3**.

	Step	Check	Yes	No
3	**CHECK AIRBAG MAIN HARNESS (PASSENGER'S AIRBAG HARNESS).** 1) Turn the ignition switch to OFF, disconnect the battery ground cable, and wait for 60 seconds or more. 2) Disconnect the airbag resistor from the connectors (2P) and (3P) of test harness P. 3) Remove the instrument panel lower cover and column cover, and disconnect the connector (AB7) from (AB2). 4) Disconnect the connectors (AB6, AB17, and AB18) from the airbag control module, and connect the connector (1AG) in the test harness AG. NOTE: For sedan models, connect test harness AH between the connectors (AB6, AB17, AB18) and (1AG). 5) Measure the resistance between connector (3AG) of test harness AG and connector (3P) of test harness P. ***Connector & terminal*** ***(3AG) No. 6 — (3P) No. 4:*** ***(3AG) No. 8 — (3P) No. 3:***	Is the resistance less than 10 Ω?	Go to step **4**.	Replace the airbag main harness along with body harness.
4	**CHECK AIRBAG CONTROL MODULE.** 1) Connect all connectors. 2) Clear the memory. 3) Perform the Inspection Mode. 4) Read the DTC.	Is the same DTC displayed?	Replace the airbag control module. <Ref. to AB-64, Airbag Control Module.>	Go to step **5**.
5	**CHECK FOR ANY OTHER DTC ON DISPLAY.**	Is any other DTC displayed?	Check DTC using "List of Diagnostic Trouble Code (DTC)". <Ref. to AB(diag)-38, List of Diagnostic Trouble Code (DTC).>	Finish the diagnosis.

BD:DTC 91 CURTAIN AIRBAG MODULE RH FAILURE

DTC DETECTING CONDITION:

- Curtain airbag harness (RH) circuit is shorted to ground.
- Curtain airbag module (RH) is faulty.
- Airbag control module is faulty.

CAUTION:
Before performing diagnosis, refer to "CAUTION" in "General Description". <Ref. to AB(diag)-4, CAUTION, General Description.>
WIRING DIAGRAM:

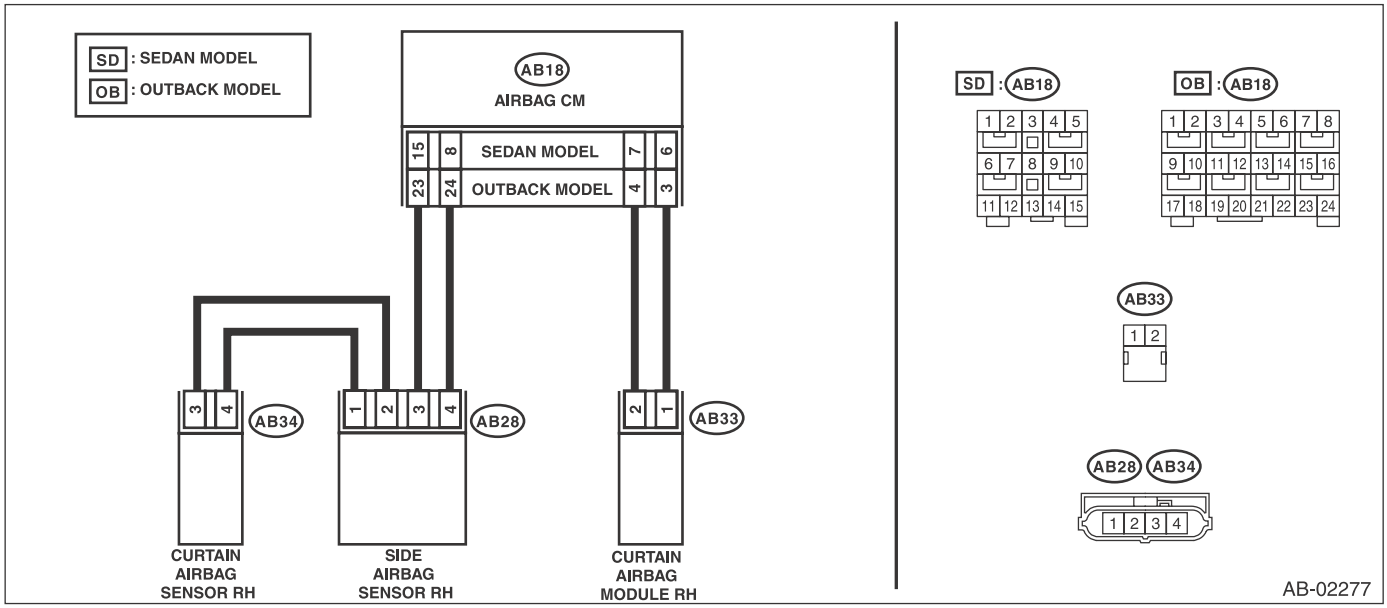

Step		Check	Yes	No
1	**CHECK POOR CONTACT OF CONNECTORS.** Check for poor contact of the connectors between the airbag control module, curtain airbag module RH and the curtain airbag sensor RH.	Is there poor contact?	Replace the airbag rear harness along with body harness.	Go to step **2**.
2	**CHECK CURTAIN AIRBAG MODULE.** 1) Turn the ignition switch to OFF, disconnect the battery ground cable, and wait for 60 seconds or more. 2) Disconnect the connector (AB33) from curtain airbag module (RH). 3) Connect the connector (1N) in the test harness N to the connector (AB33). 4) Connect the airbag resistor to the connector (2N) of test harness N. 5) Connect the battery ground terminal and turn the ignition switch to ON.	Does the airbag warning light illuminate for six seconds and go off?	Replace the curtain airbag module (RH). <Ref. to AB-61, Curtain Airbag Module.>	Go to step **3**.

	Step	Check	Yes	No
3	**CHECK AIRBAG REAR HARNESS (CURTAIN AIRBAG MODULE HARNESS RH).** 1) Turn the ignition switch to OFF, disconnect the battery ground cable, and wait for 60 seconds or more. 2) Disconnect the connector (AB26) from seat belt pretensioner (RH). 3) Disconnect connector (AB24) from side airbag module (RH). 4) Disconnect the airbag resistor from test harness N. 5) Disconnect the connectors (AB17, AB6, and AB18) from airbag control module. 6) Connect the connector (1AG) in the test harness AG to the connectors (AB6, AB17, and AB18). NOTE: For sedan models, connect test harness AH between the connectors (AB6, AB17, AB18) and (1AG). 7) Measure the resistance between connector (2N) in the test harness N and chassis ground. ***Connector & terminal*** ***(2N) No. 1 — Chassis ground:*** ***(2N) No. 2 — Chassis ground:***	Is the resistance 1 MΩ or more?	Go to step **4**.	Replace the airbag rear harness along with body harness.
4	**CHECK AIRBAG CONTROL MODULE.** 1) Connect all connectors. 2) Clear the memory. 3) Perform the Inspection Mode. 4) Read the DTC.	Is the same DTC displayed?	Replace the airbag control module. <Ref. to AB-64, Airbag Control Module.>	Go to step **5**.
5	**CHECK FOR ANY OTHER DTC ON DISPLAY.**	Is any other DTC displayed?	Check DTC using “List of Diagnostic Trouble Code (DTC)”. <Ref. to AB(diag)-38, List of Diagnostic Trouble Code (DTC).>	Finish the diagnosis.

BE:DTC 92 CURTAIN AIRBAG MODULE LH FAILURE

DTC DETECTING CONDITION:

- Curtain airbag harness (LH) circuit is shorted to ground.
- Curtain airbag module (LH) is faulty.
- Airbag control module is faulty.

CAUTION:
Before performing diagnosis, refer to "CAUTION" in "General Description". <Ref. to AB(diag)-4, CAUTION, General Description.>
WIRING DIAGRAM:

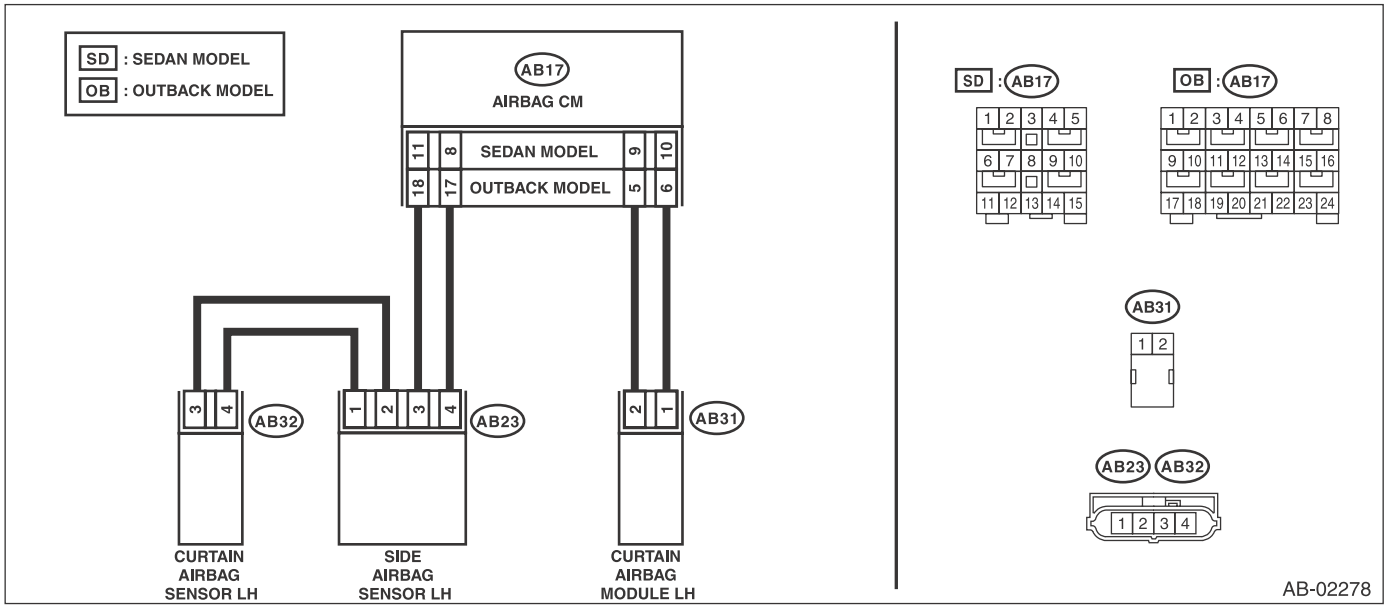

Step		Check	Yes	No
1	**CHECK POOR CONTACT OF CONNECTORS.** Check for poor contact of the connectors between the airbag control module, curtain airbag module LH and the curtain airbag sensor LH.	Is there poor contact?	Replace the airbag rear harness along with body harness.	Go to step **2**.
2	**CHECK CURTAIN AIRBAG MODULE.** 1) Turn the ignition switch to OFF, disconnect the battery ground cable, and wait for 60 seconds or more. 2) Disconnect the connector (AB31) from curtain airbag module (LH). 3) Connect the connector (1N) in the test harness N to the connector (AB31). 4) Connect the airbag resistor to the connector (2N) of test harness N. 5) Connect the battery ground terminal and turn the ignition switch to ON.	Does the airbag warning light illuminate for six seconds and go off?	Replace the curtain airbag module (LH). <Ref. to AB-61, Curtain Airbag Module.>	Go to step **3**.

	Step	Check	Yes	No
3	**CHECK AIRBAG REAR HARNESS (CURTAIN AIRBAG MODULE HARNESS LH).** 1) Turn the ignition switch to OFF, disconnect the battery ground cable, and wait for 60 seconds or more. 2) Disconnect the connector (AB21) from seat belt pretensioner (LH). 3) Disconnect connector (AB19) from side airbag module (LH). 4) Disconnect the airbag resistor from test harness N. 5) Disconnect the connectors (AB17, AB6, and AB18) from airbag control module. 6) Connect the connector (1AG) in the test harness AG to the connectors (AB6, AB17, and AB18). NOTE: For sedan models, connect test harness AH between the connectors (AB6, AB17, AB18) and (1AG). 7) Measure the resistance between connector (2N) in the test harness N and chassis ground. ***Connector & terminal*** ***(2N) No. 1 — Chassis ground:*** ***(2N) No. 2 — Chassis ground:***	Is the resistance 1 MΩ or more?	Go to step **4**.	Replace the airbag rear harness along with body harness.
4	**CHECK AIRBAG CONTROL MODULE.** 1) Connect all connectors. 2) Clear the memory. 3) Perform the Inspection Mode. 4) Read the DTC.	Is the same DTC displayed?	Replace the airbag control module. <Ref. to AB-64, Airbag Control Module.>	Go to step **5**.
5	**CHECK FOR ANY OTHER DTC ON DISPLAY.**	Is any other DTC displayed?	Check DTC using “List of Diagnostic Trouble Code (DTC)”. <Ref. to AB(diag)-38, List of Diagnostic Trouble Code (DTC).>	Finish the diagnosis.

BF:DTC 95 CURTAIN AIRBAG MODULE RH FAILURE

DTC DETECTING CONDITION:

- Curtain airbag harness (RH) is shorted to power supply.
- Curtain airbag module (RH) is faulty.
- Airbag control module is faulty.

CAUTION:
Before performing diagnosis, refer to "CAUTION" in "General Description". <Ref. to AB(diag)-4, CAUTION, General Description.>
WIRING DIAGRAM:

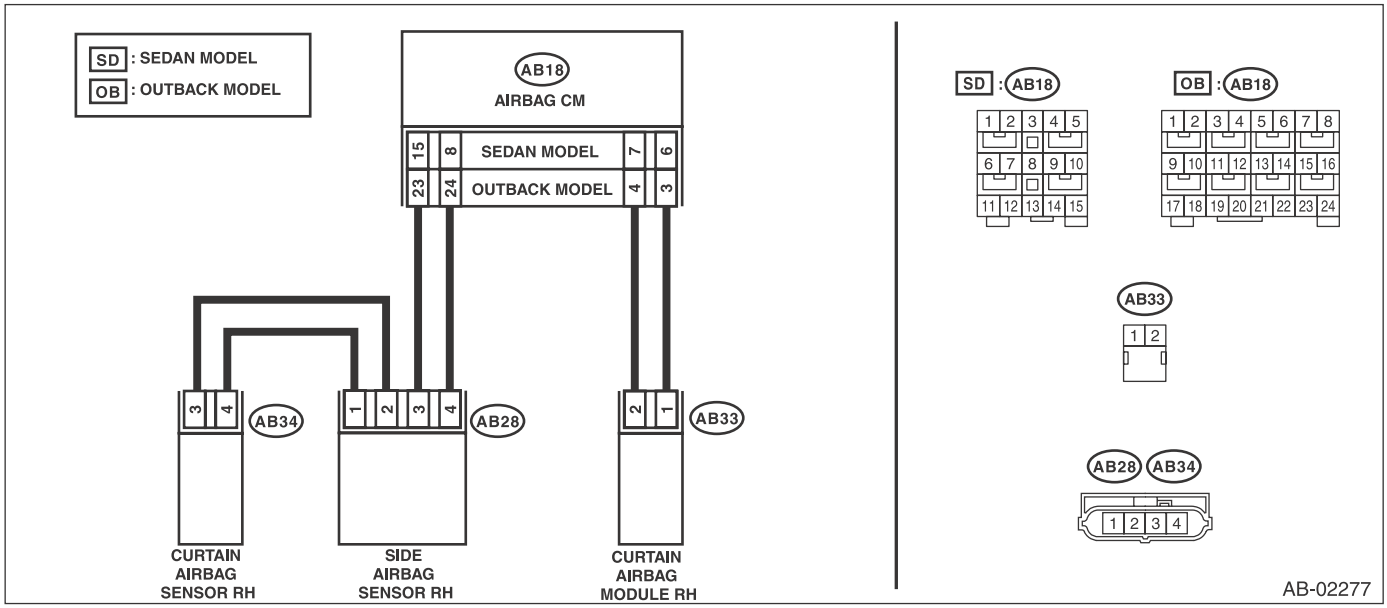

Step		Check	Yes	No
1	**CHECK POOR CONTACT OF CONNECTORS.** Check for poor contact of the connectors between the airbag control module, curtain airbag module RH and the curtain airbag sensor RH.	Is there poor contact?	Replace the airbag rear harness along with body harness.	Go to step **2**.
2	**CHECK CURTAIN AIRBAG MODULE.** 1) Turn the ignition switch to OFF, disconnect the battery ground cable, and wait for 60 seconds or more. 2) Disconnect the connector (AB33), and connect the connector (1N) in test harness N to connector (AB33). 3) Connect the airbag resistor to the connector (2N) of test harness N. 4) Connect the battery ground terminal and turn the ignition switch to ON.	Does the airbag warning light illuminate for six seconds and go off?	Replace the curtain airbag module (RH). <Ref. to AB-61, Curtain Airbag Module.>	Go to step **3**.

Step		Check	Yes	No
3	**CHECK AIRBAG REAR HARNESS (CURTAIN AIRBAG MODULE HARNESS RH).** 1) Turn the ignition switch to OFF, disconnect the battery ground cable, and wait for 60 seconds or more. 2) Disconnect the connector (AB26) from seat belt pretensioner (RH). 3) Disconnect connector (AB24) from side airbag module (RH). 4) Disconnect the airbag resistor from test harness N. 5) Disconnect the connectors (AB17, AB6, and AB18) from airbag control module. 6) Connect the connector (1AG) in the test harness AG to the connectors (AB6, AB17, and AB18). NOTE: For sedan models, connect test harness AH between the connectors (AB6, AB17, AB18) and (1AG). 7) Connect the battery ground terminal and turn the ignition switch to ON. 8) Measure the voltage between connector (2N) in the test harness N and chassis ground. ***Connector & terminal*** ***(2N) No. 1 (+) — Chassis ground (–):*** ***(2N) No. 2 (+) — Chassis ground (–):***	Is the voltage less than 1 V?	Go to step **4**.	Replace the airbag rear harness along with body harness.
4	**CHECK AIRBAG CONTROL MODULE.** 1) Connect all connectors. 2) Clear the memory. 3) Perform the Inspection Mode. 4) Read the DTC.	Is the same DTC displayed?	Replace the airbag control module. <Ref. to AB-64, Airbag Control Module.>	Go to step **5**.
5	**CHECK FOR ANY OTHER DTC ON DISPLAY.**	Is any other DTC displayed?	Check DTC using “List of Diagnostic Trouble Code (DTC)”. <Ref. to AB(diag)-38, List of Diagnostic Trouble Code (DTC).>	Finish the diagnosis.

BG:DTC 96 CURTAIN AIRBAG MODULE LH FAILURE

DTC DETECTING CONDITION:

- Curtain airbag harness (LH) is shorted to power supply.
- Curtain airbag module (LH) is faulty.
- Airbag control module is faulty.

CAUTION:
Before performing diagnosis, refer to "CAUTION" in "General Description". <Ref. to AB(diag)-4, CAUTION, General Description.>
WIRING DIAGRAM:

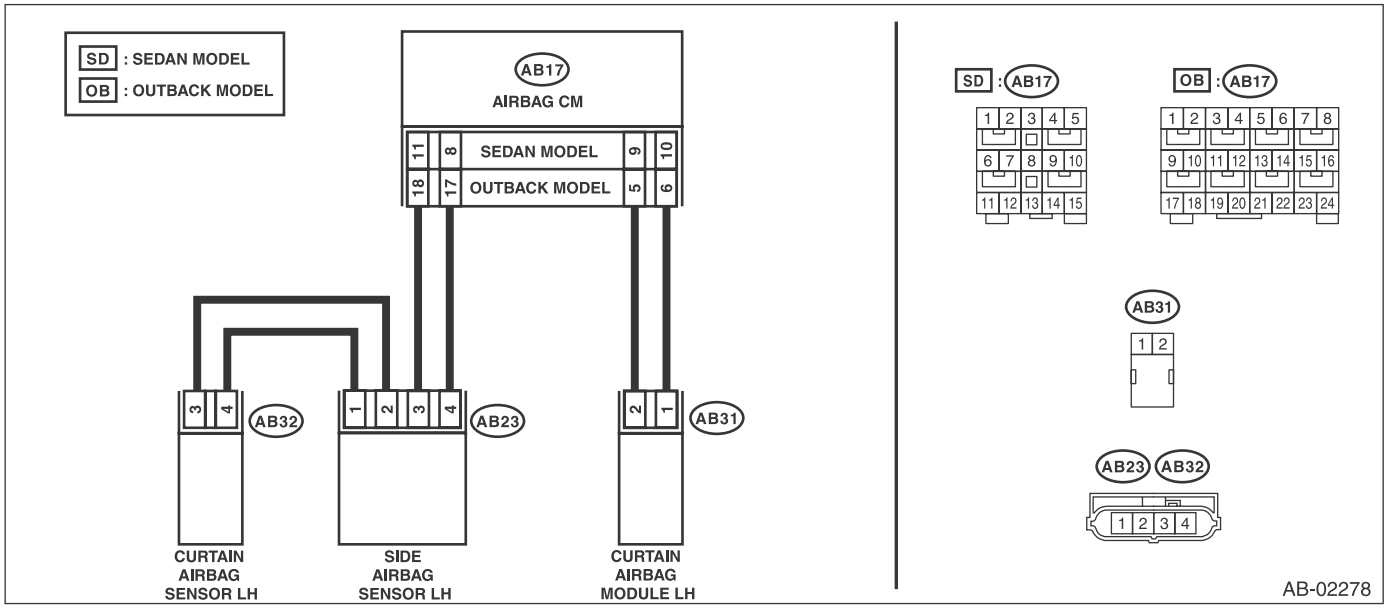

Step		Check	Yes	No
1	**CHECK POOR CONTACT OF CONNECTORS.** Check for poor contact of the connectors between the airbag control module, curtain airbag module LH and the curtain airbag sensor LH.	Is there poor contact?	Replace the airbag rear harness along with body harness.	Go to step **2**.
2	**CHECK SIDE AIRBAG MODULE.** 1) Turn the ignition switch to OFF, disconnect the battery ground cable, and wait for 60 seconds or more. 2) Disconnect the connector (AB31), and connect the connector (1N) in test harness N to connector (AB31). 3) Connect the airbag resistor to the connector (2N) of test harness N. 4) Connect the battery ground terminal and turn the ignition switch to ON.	Does the airbag warning light illuminate for six seconds and go off?	Replace the curtain airbag module (LH). <Ref. to AB-61, Curtain Airbag Module.>	Go to step **3**.

Step		Check	Yes	No
3	**CHECK AIRBAG REAR HARNESS (CURTAIN AIRBAG MODULE HARNESS LH).** 1) Turn the ignition switch to OFF, disconnect the battery ground cable, and wait for 60 seconds or more. 2) Disconnect the connector (AB21) from seat belt pretensioner (LH). 3) Disconnect connector (AB19) from side airbag module (LH). 4) Disconnect the airbag resistor from test harness N. 5) Disconnect the connectors (AB17, AB6, and AB18) from airbag control module. 6) Connect the connector (1AG) in the test harness AG to the connectors (AB6, AB17, and AB18). NOTE: For sedan models, connect test harness AH between the connectors (AB6, AB17, AB18) and (1AG). 7) Connect the battery ground terminal and turn the ignition switch to ON. 8) Measure the voltage between connector (2N) in the test harness N and chassis ground. ***Connector & terminal*** ***(2N) No. 1 (+) — Chassis ground (–):*** ***(2N) No. 2 (+) — Chassis ground (–):***	Is the voltage less than 1 V?	Go to step **4**.	Replace the airbag rear harness along with body harness.
4	**CHECK AIRBAG CONTROL MODULE.** 1) Connect all connectors. 2) Clear the memory. 3) Perform the Inspection Mode. 4) Read the DTC.	Is the same DTC displayed?	Replace the airbag control module. <Ref. to AB-64, Airbag Control Module.>	Go to step **5**.
5	**CHECK FOR ANY OTHER DTC ON DISPLAY.**	Is any other DTC displayed?	Check DTC using “List of Diagnostic Trouble Code (DTC)”. <Ref. to AB(diag)-38, List of Diagnostic Trouble Code (DTC).>	Finish the diagnosis.

BH:DTC 9A CURTAIN AIRBAG MODULE RH FAILURE

DTC DETECTING CONDITION:

- Curtain airbag harness (RH) circuit is shorted.
- Curtain airbag module (RH) is faulty.
- Airbag control module is faulty.

CAUTION:
Before performing diagnosis, refer to "CAUTION" in "General Description". <Ref. to AB(diag)-4, CAUTION, General Description.>
WIRING DIAGRAM:

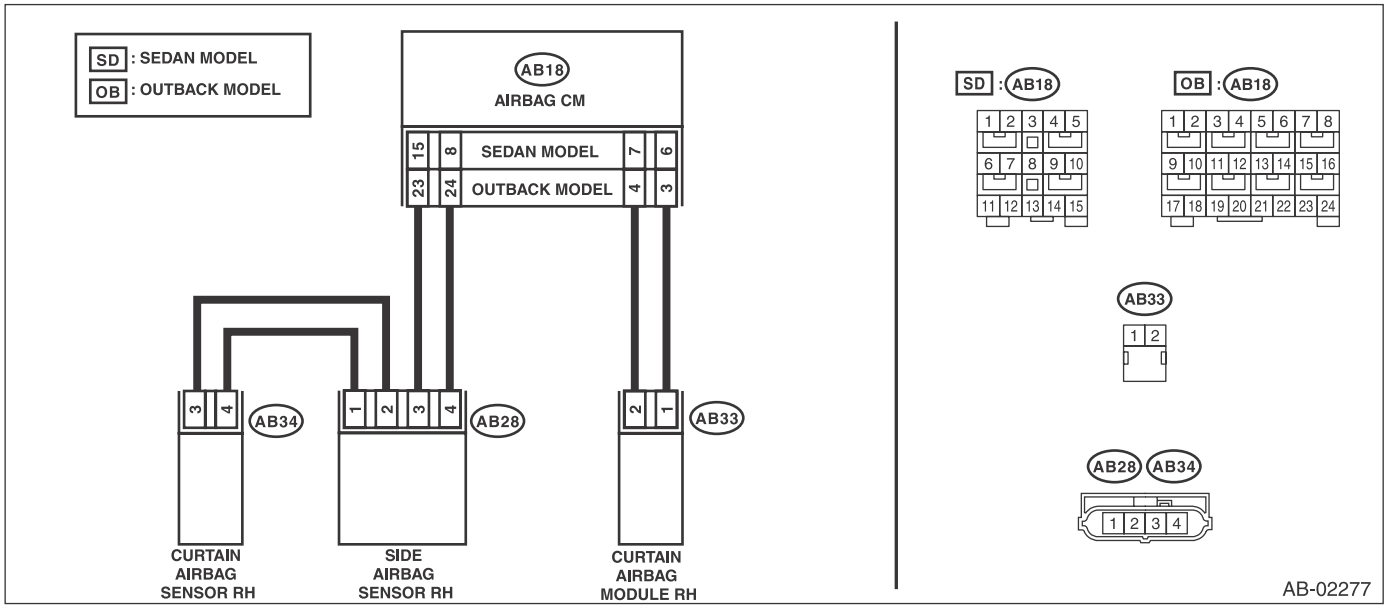

Step		Check	Yes	No
1	**CHECK POOR CONTACT OF CONNECTORS.** Check for poor contact of the connectors between the airbag control module, curtain airbag module RH and the curtain airbag sensor RH.	Is there poor contact?	Replace the airbag rear harness along with body harness.	Go to step **2**.
2	**CHECK CURTAIN AIRBAG MODULE.** 1) Turn the ignition switch to OFF, disconnect the battery ground cable, and wait for 60 seconds or more. 2) Disconnect the connector (AB33) from curtain airbag module (RH), and connect the connector (1N) in test harness N to connector (AB33). 3) Connect the airbag resistor to the connector (2N) of test harness N. 4) Connect the battery ground terminal and turn the ignition switch to ON.	Does the airbag warning light illuminate for six seconds and go off?	Replace the curtain airbag module (RH). <Ref. to AB-61, Curtain Airbag Module.>	Go to step **3**.

Step		Check	Yes	No
3	**CHECK AIRBAG REAR HARNESS (CURTAIN AIRBAG MODULE HARNESS RH).** 1) Turn the ignition switch to OFF, disconnect the battery ground cable, and wait for 60 seconds or more. 2) Disconnect the connector (AB26) from seat belt pretensioner (RH). 3) Disconnect connector (AB24) from side airbag module (RH). 4) Disconnect the airbag resistor from test harness N. 5) Disconnect the connectors (AB17, AB6, and AB18) from airbag control module. 6) Connect the connector (1AG) in the test harness AG to the connectors (AB6, AB17, and AB18). NOTE: For sedan models, connect test harness AH between the connectors (AB6, AB17, AB18) and (1AG). 7) Measure the resistance between connector (2N) terminals in test harness N. ***Connector & terminal (2N) No. 1 — (2N) No. 2:***	Is the resistance 1 MΩ or more?	Go to step **4**.	Replace the airbag rear harness along with body harness.
4	**CHECK AIRBAG CONTROL MODULE.** 1) Connect all connectors. 2) Clear the memory. 3) Perform the Inspection Mode. 4) Read the DTC.	Is the same DTC displayed?	Replace the airbag control module. <Ref. to AB-64, Airbag Control Module.>	Go to step **5**.
5	**CHECK FOR ANY OTHER DTC ON DISPLAY.**	Is any other DTC displayed?	Check DTC using "List of Diagnostic Trouble Code (DTC)". <Ref. to AB(diag)-38, List of Diagnostic Trouble Code (DTC).>	Finish the diagnosis.

BI: DTC 9B CURTAIN AIRBAG MODULE LH FAILURE

DTC DETECTING CONDITION:

- Curtain airbag harness (LH) circuit is shorted.
- Curtain airbag module (LH) is faulty.
- Airbag control module is faulty.

CAUTION:
Before performing diagnosis, refer to "CAUTION" in "General Description". <Ref. to AB(diag)-4, CAUTION, General Description.>
WIRING DIAGRAM:

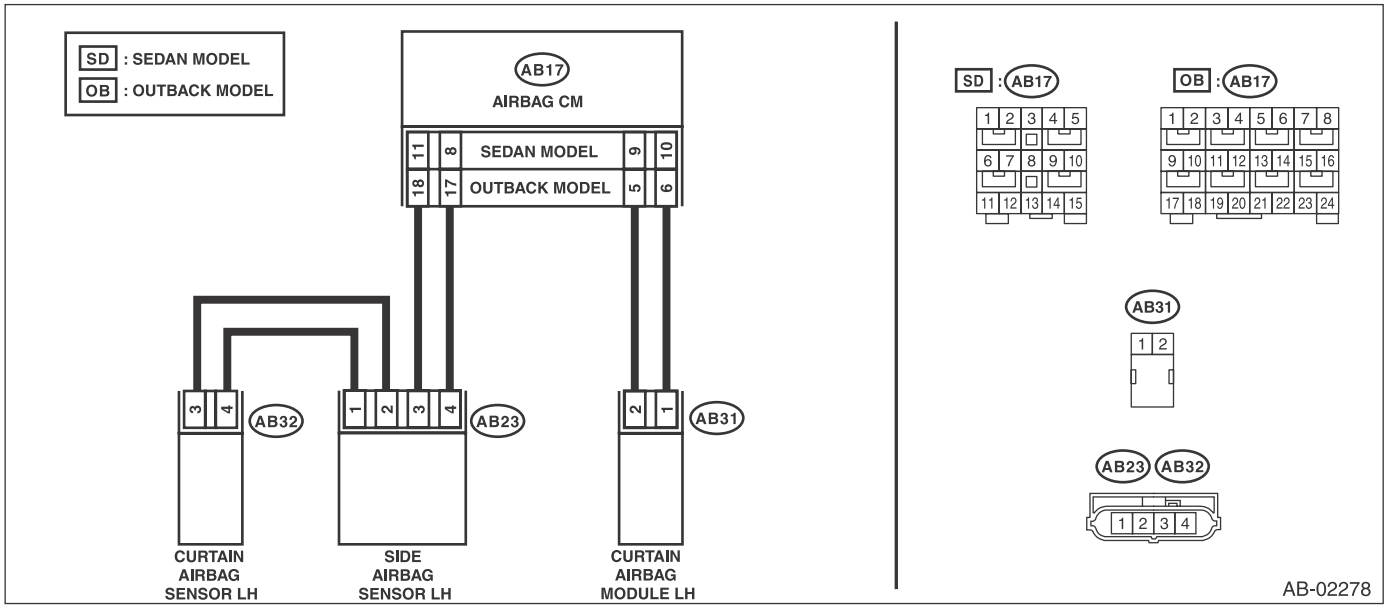

Step		Check	Yes	No
1	**CHECK POOR CONTACT OF CONNECTORS.** Check for poor contact of the connectors between the airbag control module, curtain airbag module LH and the curtain airbag sensor LH.	Is there poor contact?	Replace the airbag rear harness along with body harness.	Go to step **2**.
2	**CHECK CURTAIN AIRBAG MODULE.** 1) Turn the ignition switch to OFF, disconnect the battery ground cable, and wait for 60 seconds or more. 2) Disconnect the connector (AB31) from curtain airbag module (LH), and connect the connector (1N) in test harness N to connector (AB31). 3) Connect the airbag resistor to the connector (2N) of test harness N. 4) Connect the battery ground terminal and turn the ignition switch to ON.	Does the airbag warning light illuminate for six seconds and go off?	Replace the curtain airbag module (LH). <Ref. to AB-61, Curtain Airbag Module.>	Go to step **3**.

Step		Check	Yes	No
3	**CHECK AIRBAG REAR HARNESS (CURTAIN AIRBAG MODULE HARNESS LH).** 1) Turn the ignition switch to OFF, disconnect the battery ground cable, and wait for 60 seconds or more. 2) Disconnect the connector (AB21) from seat belt pretensioner (LH). 3) Disconnect connector (AB19) from side airbag module (LH). 4) Disconnect the airbag resistor from test harness N. 5) Disconnect the connectors (AB17, AB6, and AB18) from airbag control module. 6) Connect the connector (1AG) in the test harness AG to the connectors (AB6, AB17, and AB18). NOTE: For sedan models, connect test harness AH between the connectors (AB6, AB17, AB18) and (1AG). 7) Measure the resistance between connector (2N) terminals in test harness N. ***Connector & terminal (2N) No. 1 — (2N) No. 2:***	Is the resistance 1 MΩ or more?	Go to step **4**.	Replace the airbag rear harness along with body harness.
4	**CHECK AIRBAG CONTROL MODULE.** 1) Connect all connectors. 2) Clear the memory. 3) Perform the Inspection Mode. 4) Read the DTC.	Is the same DTC displayed?	Replace the airbag control module. <Ref. to AB-64, Airbag Control Module.>	Go to step **5**.
5	**CHECK FOR ANY OTHER DTC ON DISPLAY.**	Is any other DTC displayed?	Check DTC using "List of Diagnostic Trouble Code (DTC)". <Ref. to AB(diag)-38, List of Diagnostic Trouble Code (DTC).>	Finish the diagnosis.

BJ:DTC 9D CURTAIN AIRBAG MODULE RH FAILURE

DTC DETECTING CONDITION:

- Curtain airbag harness (RH) circuit is open.
- Curtain airbag module (RH) is faulty.
- Airbag control module is faulty.

CAUTION:
Before performing diagnosis, refer to "CAUTION" in "General Description". <Ref. to AB(diag)-4, CAUTION, General Description.>
WIRING DIAGRAM:

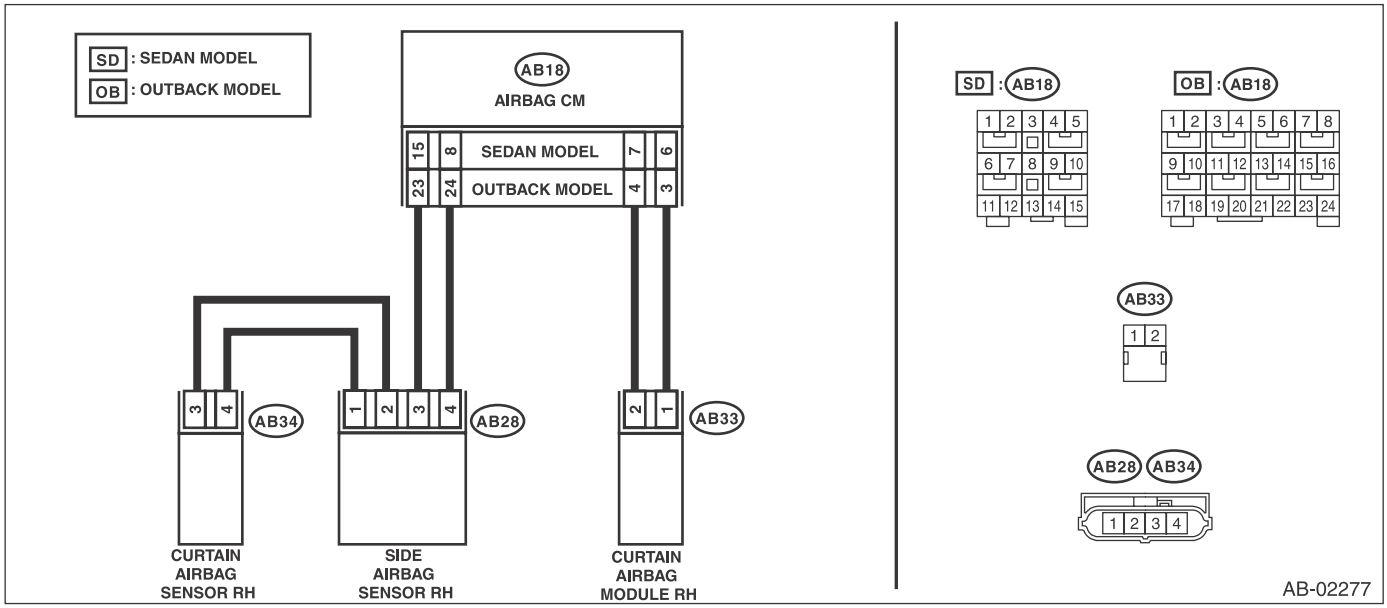

Step		Check	Yes	No
1	**CHECK POOR CONTACT OF CONNECTORS.** Check for poor contact of the connectors between the airbag control module, curtain airbag module RH and the curtain airbag sensor RH.	Is there poor contact?	Replace the airbag rear harness along with body harness.	Go to step **2**.
2	**CHECK CURTAIN AIRBAG MODULE.** 1) Turn the ignition switch to OFF, disconnect the battery ground cable, and wait for 60 seconds or more. 2) Disconnect the connector (AB33) from curtain airbag module (RH), and connect the connector (1N) in test harness N to connector (AB33). 3) Connect the airbag resistor to the connector (2N) of test harness N. 4) Connect the battery ground terminal and turn the ignition switch to ON.	Does the airbag warning light illuminate for six seconds and go off?	Replace the curtain airbag module (RH). <Ref. to AB-61, Curtain Airbag Module.>	Go to step **3**.

	Step	Check	Yes	No
3	**CHECK AIRBAG REAR HARNESS (CURTAIN AIRBAG MODULE HARNESS RH).** 1) Turn the ignition switch to OFF, disconnect the battery ground cable, and wait for 60 seconds or more. 2) Disconnect the connector (AB26) from seat belt pretensioner (RH). 3) Disconnect connector (AB24) from side airbag module (RH). 4) Disconnect the airbag resistor from test harness N. 5) Disconnect the connectors (AB17, AB6, and AB18) from airbag control module. 6) Connect the connector (1AG) in the test harness AG to the connectors (AB6, AB17, and AB18). NOTE: For sedan models, connect test harness AH between the connectors (AB6, AB17, AB18) and (1AG). 7) Measure the resistance between connector (5AG) or (6AG) in the test harness AG and connector (2N) in the test harness N. ***Connector & terminal*** ***Sedan model*** ***(5AG) No. 2 — (2N) No. 1:*** ***(5AG) No. 4 — (2N) No. 2:*** ***OUTBACK model*** ***(6AG) No. 1 — (2N) No. 1:*** ***(6AG) No. 3 — (2N) No. 2:***	Is the resistance less than 10 Ω?	Go to step **4**.	Replace the airbag rear harness along with body harness.
4	**CHECK AIRBAG CONTROL MODULE.** 1) Connect all connectors. 2) Clear the memory. 3) Perform the Inspection Mode. 4) Read the DTC.	Is the same DTC displayed?	Replace the airbag control module. <Ref. to AB-64, Airbag Control Module.>	Go to step **5**.
5	**CHECK FOR ANY OTHER DTC ON DISPLAY.**	Is any other DTC displayed?	Check DTC using "List of Diagnostic Trouble Code (DTC)". <Ref. to AB(diag)-38, List of Diagnostic Trouble Code (DTC).>	Finish the diagnosis.

BK:DTC 9E CURTAIN AIRBAG MODULE LH FAILURE

DTC DETECTING CONDITION:

- Curtain airbag harness (LH) circuit is open.
- Curtain airbag module (LH) is faulty.
- Airbag control module is faulty.

CAUTION:

Before performing diagnosis, refer to "CAUTION" in "General Description". <Ref. to AB(diag)-4, CAUTION, General Description.>

WIRING DIAGRAM:

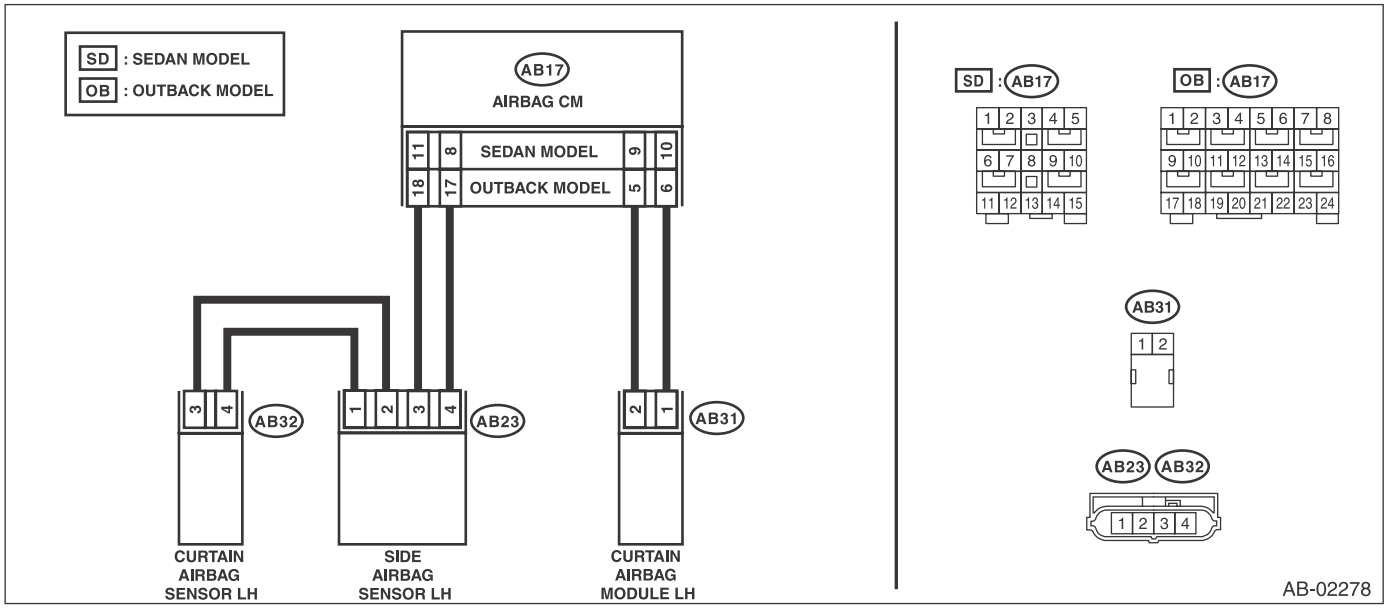

Step		Check	Yes	No
1	**CHECK POOR CONTACT OF CONNECTORS.** Check for poor contact of the connectors between the airbag control module, curtain airbag module LH and the curtain airbag sensor LH.	Is there poor contact?	Replace the airbag rear harness along with body harness.	Go to step **2**.
2	**CHECK CURTAIN AIRBAG MODULE.** 1) Turn the ignition switch to OFF, disconnect the battery ground cable, and wait for 60 seconds or more. 2) Disconnect the connector (AB31) from curtain airbag module (LH), and connect the connector (1N) in test harness N to connector (AB31). 3) Connect the airbag resistor to the connector (2N) of test harness N. 4) Connect the battery ground terminal and turn the ignition switch to ON.	Does the airbag warning light illuminate for six seconds and go off?	Replace the curtain airbag module (LH). <Ref. to AB-61, Curtain Airbag Module.>	Go to step **3**.

	Step	Check	Yes	No
3	**CHECK AIRBAG REAR HARNESS (CURTAIN AIRBAG MODULE HARNESS LH).** 1) Turn the ignition switch to OFF, disconnect the battery ground cable, and wait for 60 seconds or more. 2) Disconnect the connector (AB21) from seat belt pretensioner (LH). 3) Disconnect connector (AB19) from side airbag module (LH). 4) Disconnect the airbag resistor from test harness N. 5) Disconnect the connectors (AB17, AB6, and AB18) from airbag control module. 6) Connect the connector (1AG) in the test harness AG to the connectors (AB6, AB17, and AB18). NOTE: For sedan models, connect test harness AH between the connectors (AB6, AB17, AB18) and (1AG). 7) Measure the resistance between connector (5AG) or (6AG) in the test harness AG and connector (2N) in the test harness N. ***Connector & terminal*** ***Sedan model*** ***(5AG) No. 6 — (2N) No. 1:*** ***(5AG) No. 12 — (2N) No. 2:*** ***OUTBACK model*** ***(6AG) No. 8 — (2N) No. 1:*** ***(6AG) No. 6 — (2N) No. 2:***	Is the resistance less than 10 Ω?	Go to step **4**.	Replace the airbag rear harness along with body harness.
4	**CHECK AIRBAG CONTROL MODULE.** 1) Connect all connectors. 2) Clear the memory. 3) Perform the Inspection Mode. 4) Read the DTC.	Is the same DTC displayed?	Replace the airbag control module. <Ref. to AB-64, Airbag Control Module.>	Go to step **5**.
5	**CHECK FOR ANY OTHER DTC ON DISPLAY.**	Is any other DTC displayed?	Check DTC using "List of Diagnostic Trouble Code (DTC)". <Ref. to AB(diag)-38, List of Diagnostic Trouble Code (DTC).>	Finish the diagnosis.

BL:DTC A1 FRONT SENSOR BUS COMMUNICATION ERROR

DTC DETECTING CONDITION:

- Harness between airbag control module and front sub sensor is open or shorted.
- Front sub sensor is faulty.
- Airbag control module is faulty.

CAUTION:

Before performing diagnosis, refer to "CAUTION" in "General Description". <Ref. to AB(diag)-4, CAUTION, General Description.>

WIRING DIAGRAM:

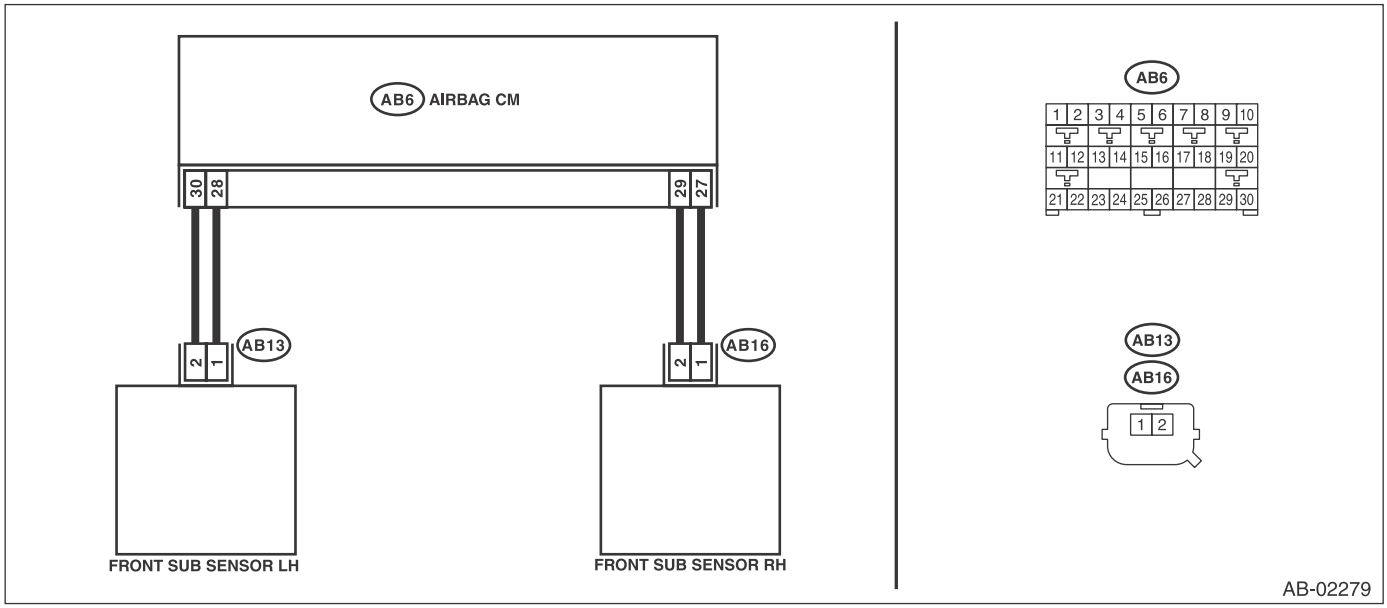

Step		Check	Yes	No
1	**CHECK POOR CONTACT OF CONNECTORS.** Check for poor contact of the connectors between the airbag control module and the front sub sensor.	Is there poor contact?	Replace the airbag main harness along with body harness.	Go to step **2**.

	Step	Check	Yes	No
2	**CHECK AIRBAG MAIN HARNESS (FRONT SENSOR BUS LH).** 1) Turn the ignition switch to OFF, disconnect the battery ground cable, and wait for 60 seconds or more. 2) Remove the instrument panel lower cover and column cover, and disconnect the connectors (AB7) and (AB2). 3) Remove the console front panel and disconnect the connector (AB9). 4) Disconnect the connectors (AB6, AB17, AB18) from airbag control module. 5) Connect the connector (1AG) in the test harness AG to the connectors (AB6, AB17, and AB18). NOTE: For sedan models, connect test harness AH between the connectors (AB6, AB17, AB18) and (1AG). 6) Disconnect the connector (AB13) from the front sub sensor (LH), and then connect the connector (1H) in the test harness H to connector (AB13). 7) Measure the resistance between connector (4AG) in the test harness AG and connector (3H) in the test harness H. ***Connector & terminal*** ***(4AG) No. 7 — (3H) No. 5:*** ***(4AG) No. 9 — (3H) No. 6:***	Is the resistance less than 10 Ω?	Go to step **3**.	Replace the airbag main harness along with body harness.
3	**CHECK AIRBAG MAIN HARNESS (FRONT SENSOR BUS LH).** Measure the resistance between connector (4AG) in the test harness AG and chassis ground, and the resistance between connector (4AG) terminals in the test harness AG. ***Connector & terminal*** ***(4AG) No. 7 — Chassis ground:*** ***(4AG) No. 9 — Chassis ground:*** ***(4AG) No. 7 — (4AG) No. 9:***	Is the resistance 1 MΩ or more?	Go to step **4**.	Replace the airbag rear harness along with body harness.
4	**CHECK AIRBAG MAIN HARNESS (FRONT SENSOR BUS RH).** 1) Disconnect the connector (AB16) from the front sub sensor (RH), and then connect the connector (1H) in the test harness H to connector (AB16). 2) Measure the resistance between connector (4AG) in the test harness AG and connector (3H) in the test harness H. ***Connector & terminal*** ***(4AG) No. 14 — (3H) No. 5:*** ***(4AG) No. 12 — (3H) No. 6:***	Is the resistance less than 10 Ω?	Go to step **5**.	Replace the airbag main harness along with body harness.

	Step	Check	Yes	No
5	**CHECK AIRBAG MAIN HARNESS (FRONT SENSOR BUS RH).** Measure the resistance between connector (4AG) in the test harness AG and chassis ground, and the resistance between connector (4AG) terminals in the test harness AG. ***Connector & terminal*** ***(4AG) No. 12 — Chassis ground:*** ***(4AG) No. 14 — Chassis ground:*** ***(4AG) No. 12 — (4AG) No. 14:***	Is the resistance 1 MΩ or more?	Go to step **6**.	Replace the airbag rear harness along with body harness.
6	**CHECK AIRBAG CONTROL MODULE.** 1) Connect all connectors. 2) Clear the memory. 3) Perform the Inspection Mode. 4) Read the DTC.	Is the same DTC displayed?	Replace the front sub sensor (LH) and front sub sensor (RH). <Ref. to AB-67, REMOVAL, Front Sub Sensor.> Replace the airbag control module if not operating normally even after replacing the sensor. <Ref. to AB-64, REMOVAL, Airbag Control Module.>	Go to step **7**.
7	**CHECK FOR ANY OTHER DTC ON DISPLAY.**	Is any other DTC displayed?	Check DTC using “List of Diagnostic Trouble Code”. <Ref. to AB(diag)-38, List of Diagnostic Trouble Code (DTC).>	Finish the diagnosis.

BM:DTC BB ROLL OVER:FIRING OUTPUT

This DTC is indicated when the curtain airbag module and the seat belt pretensioner are deployed.
Once this DTC is displayed, the memory cannot be cleared. Replace the following parts.

- Airbag control module <Ref. to AB-64, Airbag Control Module.>
- Curtain airbag module (operating side) <Ref. to AB-61, Curtain Airbag Module.>
- Curtain airbag sensor (operating side) <Ref. to AB-80, Curtain Airbag Sensor.>
- Front outer seat belt with pretensioner (operating side) <Ref. to SB-17, Front Seat Belt.>

BN:DTC E3 FRONT SENSOR BUS RH COMMUNICATION ERROR

NOTE:
Refer to DTC A1 for DTC E3. <Ref. to AB(diag)-137, DTC A1 FRONT SENSOR BUS COMMUNICATION ERROR, Diagnostic Chart with Trouble Code.>

BO:DTC E4 FRONT SENSOR BUS RH COMMUNICATION ERROR

NOTE:
Refer to DTC A1 for DTC E4. <Ref. to AB(diag)-137, DTC A1 FRONT SENSOR BUS COMMUNICATION ERROR, Diagnostic Chart with Trouble Code.>

BP:DTC E7 FRONT SENSOR BUS LH COMMUNICATION ERROR

DTC DETECTING CONDITION:

- Open or short circuit in harness of front sensor bus (LH).
- Front sub sensor (LH) is faulty.
- Airbag control module is faulty.

CAUTION:
Before performing diagnosis, refer to "CAUTION" in "General Description". <Ref. to AB(diag)-4, CAUTION, General Description.>
WIRING DIAGRAM:

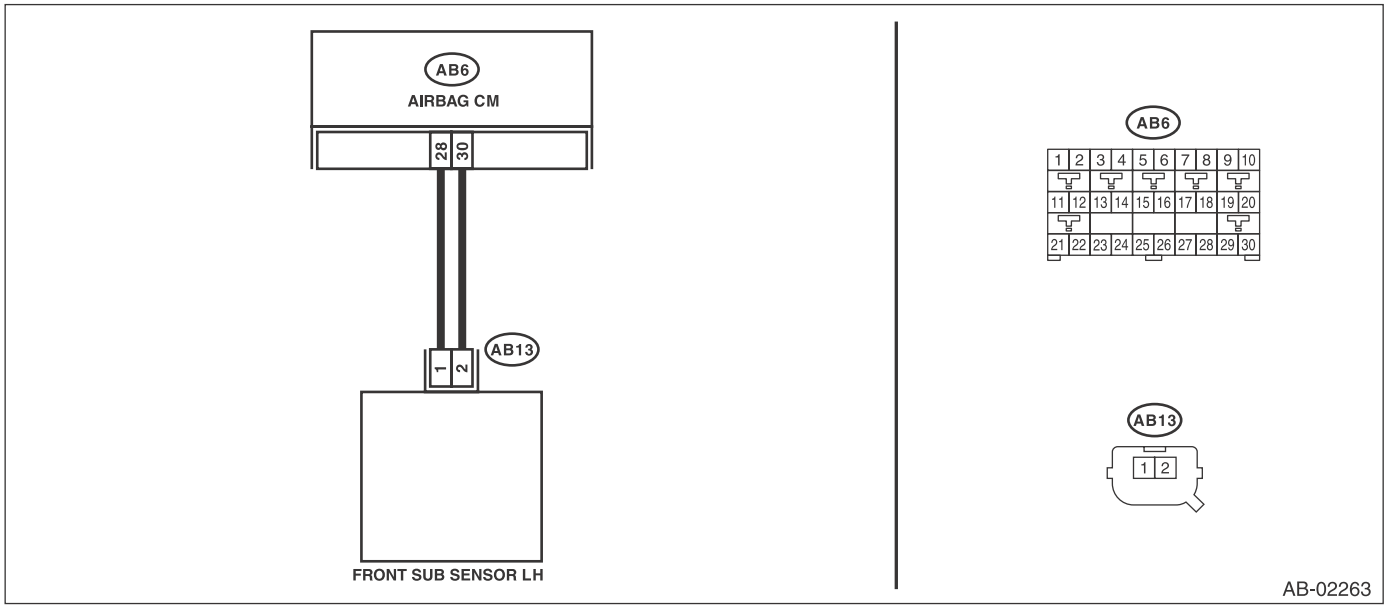

Step		Check	Yes	No
1	**CHECK POOR CONTACT OF CONNECTORS.** Check for poor contact of the connectors (AB6, AB13) between the airbag control module and the front sub sensor (LH).	Is there poor contact?	Replace the airbag main harness along with body harness.	Go to step **2**.

	Step	Check	Yes	No
2	**CHECK AIRBAG MAIN HARNESS (FRONT SENSOR BUS LH).** 1) Turn the ignition switch to OFF, disconnect the battery ground cable, and wait for 60 seconds or more. 2) Remove the instrument panel lower cover and column cover, and disconnect the connectors (AB7) and (AB2). 3) Remove the console front panel and disconnect the connector (AB9). 4) Disconnect the connectors (AB17, AB6, and AB18) from airbag control module. 5) Connect the connector (1AG) in the test harness AG to the connectors (AB6, AB17, and AB18). NOTE: For sedan models, connect test harness AH between the connectors (AB6, AB17, AB18) and (1AG). 6) Disconnect the front sub sensor (LH), and then connect the connector (1H) in the test harness H to connector (AB13). 7) Measure the resistance between connector (4AG) in the test harness AG and connector (3H) in the test harness H. ***Connector & terminal*** ***(4AG) No. 7 — (3H) No. 5:*** ***(4AG) No. 9 — (3H) No. 6:***	Is the resistance less than 10 Ω?	Go to step **3**.	Replace the airbag main harness along with body harness.
3	**CHECK AIRBAG MAIN HARNESS (FRONT SENSOR BUS LH).** Measure the resistance between connector (4AG) in the test harness AG and chassis ground, and the resistance between connector (4AG) terminals in the test harness AG. ***Connector & terminal*** ***(4AG) No. 7 — Chassis ground:*** ***(4AG) No. 9 — Chassis ground:*** ***(4AG) No. 7 — (4AG) No. 9:***	Is the resistance 1 MΩ or more?	Go to step **4**.	Replace the airbag main harness along with body harness.
4	**CHECK AIRBAG CONTROL MODULE.** 1) Connect all connectors. 2) Clear the memory. 3) Perform the Inspection Mode. 4) Read the DTC.	Is the same DTC displayed?	Replace the front sub sensor (LH). <Ref. to AB-67, REMOVAL, Front Sub Sensor.> Replace the airbag control module if not operating normally even after replacing the sensor. <Ref. to AB-64, REMOVAL, Airbag Control Module.>	Go to step **5**.
5	**CHECK FOR ANY OTHER DTC ON DISPLAY.**	Is any other DTC displayed?	Check DTC using “List of Diagnostic Trouble Code”. <Ref. to AB(diag)-38, LIST, List of Diagnostic Trouble Code (DTC).>	Finish the diagnosis.

BQ:DTC E8 FRONT SENSOR BUS LH COMMUNICATION ERROR

NOTE:
Refer to DTC E7 for DTC E8. <Ref. to AB(diag)-140, DTC E7 FRONT SENSOR BUS LH COMMUNICATION ERROR, Diagnostic Chart with Trouble Code.>

BR:DTC E9 SIDE SENSOR BUS RH COMMUNICATION ERROR

NOTE:
Refer to DTC EC for details on DTC E9. <Ref. to AB(diag)-143, DTC EC SIDE SENSOR BUS RH COMMUNICATION ERROR, Diagnostic Chart with Trouble Code.>

BS:DTC EB SIDE SENSOR BUS RH COMMUNICATION ERROR

NOTE:
Refer to DTC EC for details on DTC EB. <Ref. to AB(diag)-143, DTC EC SIDE SENSOR BUS RH COMMUNICATION ERROR, Diagnostic Chart with Trouble Code.>

BT:DTC EC SIDE SENSOR BUS RH COMMUNICATION ERROR

DTC DETECTING CONDITION:

- Open or short circuit in harness of side sensor bus (RH).
- Side airbag sensor (RH) and curtain airbag sensor (RH) are faulty.
- Airbag control module is faulty.

CAUTION:

Before performing diagnosis, refer to "CAUTION" in "General Description". <Ref. to AB(diag)-4, CAUTION, General Description.>

WIRING DIAGRAM:

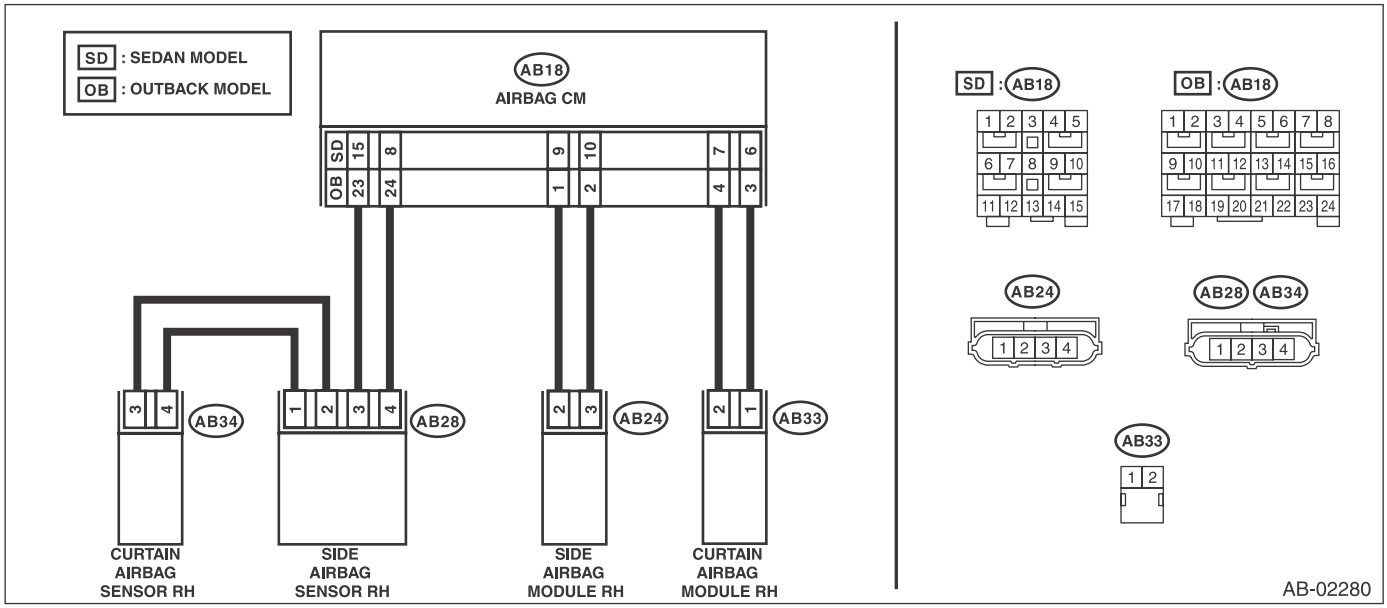

Step		Check	Yes	No
1	**CHECK POOR CONTACT OF CONNECTORS.** Check for poor contact of the connectors (AB18, AB28, AB34) between the airbag control module and the curtain airbag sensor (RH).	Is there poor contact?	Replace the airbag rear harness along with body harness.	Go to step **2**.

	Step	Check	Yes	No
2	**CHECK AIRBAG REAR HARNESS (BETWEEN AIRBAG CONTROL MODULE AND SIDE AIRBAG SENSOR RH).** 1) Turn the ignition switch to OFF, disconnect the battery ground cable, and wait for 60 seconds or more. 2) Disconnect the connector (AB26) from seat belt pretensioner (RH). 3) Disconnect the connector (AB33) from curtain airbag module (RH). 4) Disconnect connectors (AB25) and (AB24) from side airbag module (RH). 5) Disconnect the connectors (AB17, AB6, and AB18) from airbag control module. 6) Connect the connector (1AG) in the test harness AG to the connectors (AB6, AB17, and AB18). NOTE: For sedan models, connect test harness AH between the connectors (AB6, AB17, AB18) and (1AG). 7) Disconnect the connector (AB28) from side airbag sensor (RH), and connect the connector (2V) in test harness V to connector (AB28). 8) Measure the resistance between connector (5AG) in the test harness AG and connector (3V) in the test harness V. ***Connector & terminal*** ***Sedan model*** ***(5AG) No. 9 — (3V) No. 2:*** ***(5AG) No. 10 — (3V) No. 1:*** ***OUTBACK model*** ***(5AG) No. 8 — (3V) No. 2:*** ***(5AG) No. 10 — (3V) No. 1:***	Is the resistance less than 10 Ω?	Go to step **3**.	Replace the airbag rear harness along with body harness.
3	**CHECK AIRBAG REAR HARNESS (BETWEEN AIRBAG CONTROL MODULE AND SIDE AIRBAG SENSOR RH).** Measure the resistance between connector (3V) in test harness V and chassis ground, and the resistance between connector (3V) terminals. ***Connector & terminal*** ***(3V) No. 1 — Chassis ground:*** ***(3V) No. 2 — Chassis ground:*** ***(3V) No. 1 — (3V) No. 2:***	Is the resistance 1 MΩ or more?	Go to step **4**.	Replace the airbag rear harness along with body harness.

Step		Check	Yes	No
4	**CHECK AIRBAG REAR HARNESS (BETWEEN SIDE AIRBAG SENSOR AND CURTAIN AIRBAG SENSOR RH).** 1) Disconnect the connector (2V) in the test harness V from the connector (AB28) of side airbag sensor (RH). 2) Connect the connector (AB28) of side airbag sensor (RH) and the connector (1AI) in the test harness AI. 3) Connect the connector (2AI) in the test harness AI and the connector (1V) in the test harness V. 4) Disconnect the connector (AB34) from curtain airbag sensor (RH), and connect the connector (2V) in test harness V to connector (AB34). 5) Measure the resistance between connector (3V) terminals in the test harness V. ***Connector & terminal*** ***(3V) No. 2 — (3V) No. 6:*** ***(3V) No. 1 — (3V) No. 7:***	Is the resistance less than 10 Ω?	Go to step **5**.	Replace the airbag rear harness along with body harness.
5	**CHECK AIRBAG REAR HARNESS (BETWEEN SIDE AIRBAG SENSOR AND CURTAIN AIRBAG SENSOR RH).** Measure the resistance between connector (3V) in test harness V and chassis ground, and the resistance between connector (3V) terminals in test harness V. ***Connector & terminal*** ***(3V) No. 2 — Chassis ground:*** ***(3V) No. 1 — Chassis ground:*** ***(3V) No. 1 — (3V) No. 2:***	Is the resistance 1 MΩ or more?	Go to step **6**.	Replace the airbag rear harness along with body harness.
6	**CHECK AIRBAG CONTROL MODULE.** 1) Connect all connectors. 2) Clear the memory. 3) Perform the Inspection Mode. 4) Read the DTC.	Is the same DTC displayed?	Go to step **7**.	Go to step **8**.
7	**REPLACE SIDE AIRBAG SENSOR (RH) AND CHECK AIRBAG CONTROL MODULE AFTER REPLACEMENT.** 1) Turn the ignition switch to OFF, disconnect the battery ground cable, and wait for 60 seconds or more. 2) Replace the side airbag sensor (RH). <Ref. to AB-74, REMOVAL, Side Airbag Sensor.> 3) Connect all connectors. 4) Clear the memory. 5) Perform the Inspection Mode. 6) Read the DTC.	Is the system normal?	Go to step **8**.	Replace the curtain airbag sensor (RH). <Ref. to AB-80, REMOVAL, Curtain Airbag Sensor.> Replace the airbag control module if not operating normally even after replacing the sensor. <Ref. to AB-64, REMOVAL, Airbag Control Module.>
8	**CHECK FOR ANY OTHER DTC ON DISPLAY.**	Is any other DTC displayed?	Check DTC using "List of Diagnostic Trouble Code (DTC)". <Ref. to AB(diag)-38, List of Diagnostic Trouble Code (DTC).>	Finish the diagnosis.

BU:DTC ED SIDE SENSOR BUS RH COMMUNICATION ERROR

NOTE:
Refer to DTC EE for details on DTC ED. <Ref. to AB(diag)-147, DTC EE SIDE SENSOR BUS RH COMMUNICATION ERROR, Diagnostic Chart with Trouble Code.>

BV:DTC EE SIDE SENSOR BUS RH COMMUNICATION ERROR

DTC DETECTING CONDITION:

- Open or short circuit in harness of side sensor bus (RH).
- Side airbag sensor (RH) or curtain airbag sensor (RH) are faulty.
- Airbag control module is faulty.

CAUTION:

Before performing diagnosis, refer to "CAUTION" in "General Description". <Ref. to AB(diag)-4, CAUTION, General Description.>

WIRING DIAGRAM:

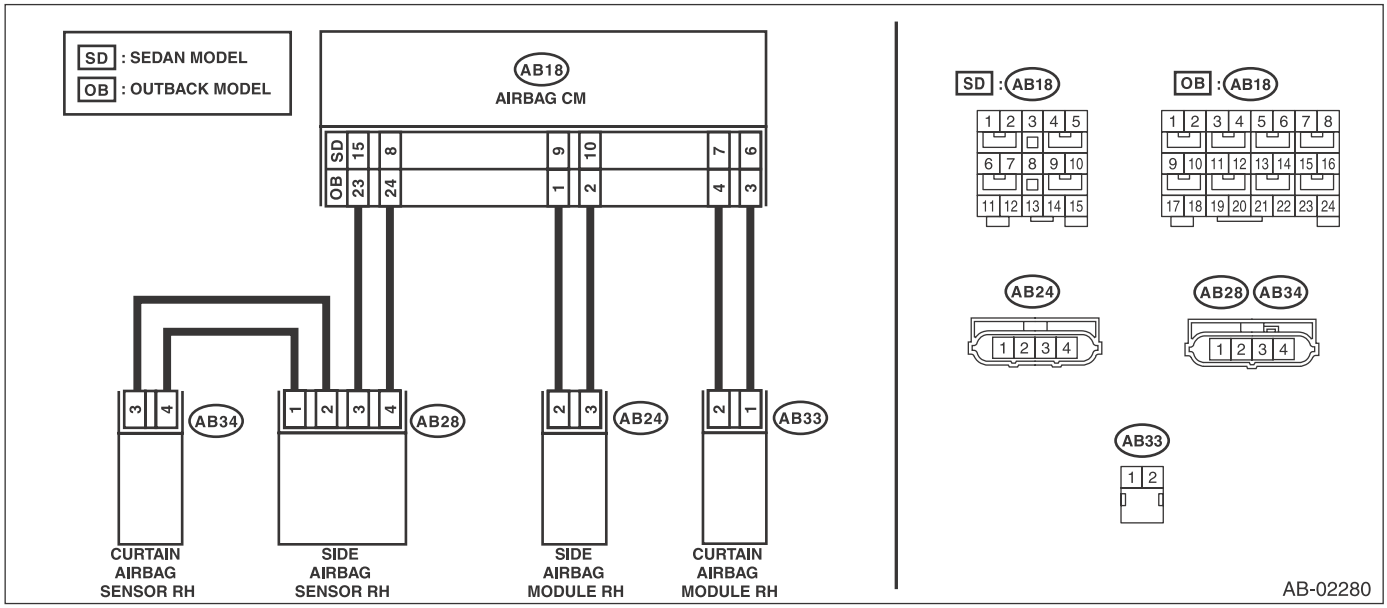

Step		Check	Yes	No
1	**CHECK POOR CONTACT OF CONNECTORS.** Check for poor contact of the connectors (AB18, AB28, AB34) between the airbag control module and the curtain airbag sensor (RH).	Is there poor contact?	Replace the airbag rear harness along with body harness.	Go to step **2**.

Step		Check	Yes	No
2	**CHECK AIRBAG REAR HARNESS (BETWEEN SIDE AIRBAG SENSOR (RH) AND CURTAIN AIRBAG SENSOR (RH)).** 1) Turn the ignition switch to OFF, disconnect the battery ground cable, and wait for 60 seconds or more. 2) Disconnect the connector (AB26) from seat belt pretensioner (RH). 3) Disconnect the connector (AB33) from curtain airbag module (RH). 4) Disconnect connectors (AB25) and (AB24) from side airbag module (RH). 5) Disconnect connector (AB28) from side airbag sensor (RH). 6) Connect the connector (AB28) of side airbag sensor (RH) and the connector (1AI) in the test harness AI. 7) Connect the connector (2AI) in the test harness AI and the connector (1V) in the test harness V. 8) Disconnect the connector (AB34) from curtain airbag sensor (RH), and connect the connector (2V) in test harness V to connector (AB34). 9) Measure the resistance between connector (3V) terminals in the test harness V. ***Connector & terminal*** ***(3V) No. 2 — (3V) No. 6:*** ***(3V) No. 1 — (3V) No. 7:***	Is the resistance less than 10 Ω?	Go to step **3**.	Replace the airbag rear harness along with body harness.
3	**CHECK AIRBAG REAR HARNESS (BETWEEN SIDE AIRBAG SENSOR AND CURTAIN AIRBAG SENSOR RH).** Measure the resistance between connector (3V) in test harness V and chassis ground, and the resistance between connector (3V) terminals in test harness V. ***Connector & terminal*** ***(3V) No. 2 — Chassis ground:*** ***(3V) No. 1 — Chassis ground:*** ***(3V) No. 1 — (3V) No. 2:***	Is the resistance 1 MΩ or more?	Go to step **4**.	Replace the airbag rear harness along with body harness.

	Step	Check	Yes	No
4	**CHECK AIRBAG REAR HARNESS (BETWEEN AIRBAG CONTROL MODULE AND SIDE AIRBAG SENSOR (RH)).** 1) Disconnect the connectors (AB17, AB6, and AB18) from airbag control module. 2) Connect the connector (1AG) in the test harness AG to the connectors (AB6, AB17, and AB18). NOTE: For sedan models, connect test harness AH between the connectors (AB6, AB17, AB18) and (1AG). 3) Disconnect the connector (AB28) in the side airbag sensor (RH) from the connector (1AI) in the test harness AI. 4) Disconnect the connector (2AI) in the test harness AI from the connector (1V) in the test harness V. 5) Connect the connector (AB28) of side airbag sensor (RH) and the connector (2V) in the test harness V to the connector (AB28). 6) Measure the resistance between connector (5AG) in the test harness AG and connector (3V) in the test harness V. ***Connector & terminal*** ***Sedan model*** ***(5AG) No. 9 — (3V) No. 2:*** ***(5AG) No. 10 — (3V) No. 1:*** ***OUTBACK model*** ***(5AG) No. 8 — (3V) No. 2:*** ***(5AG) No. 10 — (3V) No. 1:***	Is the resistance less than 10 Ω?	Go to step **5**.	Replace the airbag rear harness along with body harness.
5	**CHECK AIRBAG REAR HARNESS (BETWEEN AIRBAG CONTROL MODULE AND SIDE AIRBAG SENSOR RH).** Measure the resistance between connector (3V) in test harness V and chassis ground, and the resistance between connector (3V) terminals. ***Connector & terminal*** ***(3V) No. 1 — Chassis ground:*** ***(3V) No. 2 — Chassis ground:*** ***(3V) No. 1 — (3V) No. 2:***	Is the resistance 1 MΩ or more?	Go to step **6**.	Replace the airbag rear harness along with body harness.
6	**CHECK AIRBAG CONTROL MODULE.** 1) Connect all connectors. 2) Clear the memory. 3) Perform the Inspection Mode. 4) Read the DTC.	Is the same DTC displayed?	Go to step **7**.	Go to step **8**.

Step		Check	Yes	No
7	**REPLACE SIDE AIRBAG SENSOR (RH) AND CHECK AIRBAG CONTROL MODULE AFTER REPLACEMENT.** 1) Turn the ignition switch to OFF, disconnect the battery ground cable, and wait for 60 seconds or more. 2) Replace the side airbag sensor (RH). <Ref. to AB-74, REMOVAL, Side Airbag Sensor.> 3) Connect all connectors. 4) Clear the memory. 5) Perform the Inspection Mode. 6) Read the DTC.	Is the system normal?	Go to step **8**.	Replace the curtain airbag sensor (RH). <Ref. to AB-80, REMOVAL, Curtain Airbag Sensor.> Replace the airbag control module if not operating normally even after replacing the sensor. <Ref. to AB-64, REMOVAL, Airbag Control Module.>
8	**CHECK FOR ANY OTHER DTC ON DISPLAY.**	Is any other DTC displayed?	Check DTC using "List of Diagnostic Trouble Code (DTC)". <Ref. to AB(diag)-38, List of Diagnostic Trouble Code (DTC).>	Finish the diagnosis.

BW:DTC F1 SIDE SENSOR BUS LH COMMUNICATION ERROR

NOTE:
Refer to DTC F4 for details on DTC F1. <Ref. to AB(diag)-151, DTC F4 SIDE SENSOR BUS LH COMMUNICATION ERROR, Diagnostic Chart with Trouble Code.>

BX:DTC F3 SIDE SENSOR BUS LH COMMUNICATION ERROR

NOTE:
Refer to DTC F4 for details on DTC F3. <Ref. to AB(diag)-151, DTC F4 SIDE SENSOR BUS LH COMMUNICATION ERROR, Diagnostic Chart with Trouble Code.>

BY:DTC F4 SIDE SENSOR BUS LH COMMUNICATION ERROR

DTC DETECTING CONDITION:

- Open or short circuit in harness of side sensor bus (LH).
- Side airbag sensor (LH) and curtain airbag sensor (LH) are faulty.
- Airbag control module is faulty.

CAUTION:

Before performing diagnosis, refer to "CAUTION" in "General Description". <Ref. to AB(diag)-4, CAUTION, General Description.>

WIRING DIAGRAM:

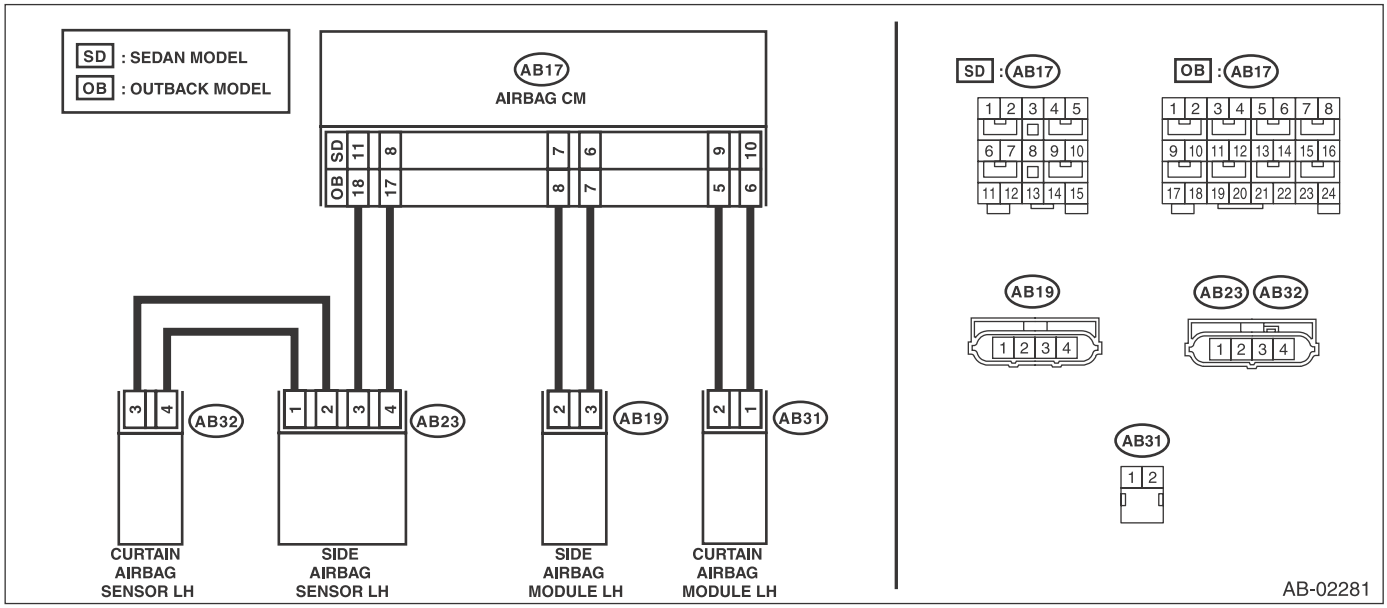

Step		Check	Yes	No
1	**CHECK POOR CONTACT OF CONNECTORS.** Check for poor contact of the connectors (AB17, AB23, AB32) between the airbag control module and the curtain airbag sensor (LH).	Is there poor contact?	Replace the airbag rear harness along with body harness.	Go to step **2**.

	Step	Check	Yes	No
2	**CHECK AIRBAG REAR HARNESS (BETWEEN AIRBAG CONTROL MODULE AND SIDE AIRBAG SENSOR LH).** 1) Turn the ignition switch to OFF, disconnect the battery ground cable, and wait for 60 seconds or more. 2) Disconnect the connector (AB21) from seat belt pretensioner (LH). 3) Disconnect the connector (AB31) from curtain airbag module (LH). 4) Disconnect connectors (AB19) and (AB20) from side airbag module (LH). 5) Disconnect the connectors (AB17, AB6, and AB18) from airbag control module. 6) Connect the connector (1AG) in the test harness AG to the connectors (AB6, AB17, and AB18). NOTE: For sedan models, connect test harness AH between the connectors (AB6, AB17, AB18) and (1AG). 7) Disconnect the connector (AB23) from side airbag sensor (LH), and connect the connector (2V) in test harness V to connector (AB23). 8) Measure the resistance between connector (5AG) in the test harness AG and connector (3V) in the test harness V. ***Connector & terminal*** ***Sedan model*** ***(5AG) No. 14 — (3V) No. 1:*** ***(5AG) No. 15 — (3V) No. 2:*** ***OUTBACK model*** ***(5AG) No. 14 — (3V) No. 1:*** ***(5AG) No. 16 — (3V) No. 2:***	Is the resistance less than 10 Ω?	Go to step **3**.	Replace the airbag rear harness along with body harness.
3	**CHECK AIRBAG REAR HARNESS (BETWEEN AIRBAG CONTROL MODULE AND SIDE AIRBAG SENSOR LH).** Measure the resistance between connector (3V) in test harness V and chassis ground, and the resistance between connector (3V) terminals. ***Connector & terminal*** ***(3V) No. 1 — Chassis ground:*** ***(3V) No. 2 — Chassis ground:*** ***(3V) No. 1 — (3V) No. 2:***	Is the resistance 1 MΩ or more?	Go to step **4**.	Replace the airbag rear harness along with body harness.

	Step	Check	Yes	No
4	**CHECK AIRBAG REAR HARNESS (BETWEEN SIDE AIRBAG SENSOR LH AND CURTAIN AIRBAG SENSOR LH).** 1) Disconnect the connector (2V) in the test harness V from the connector (AB23) of side airbag sensor (LH). 2) Connect the connector (AB23) of side airbag sensor (LH) and the connector (1AI) in the test harness AI. 3) Connect the connector (2AI) in the test harness AI and the connector (1V) in the test harness V. 4) Disconnect the connector (AB32) from curtain airbag sensor (LH), and connect the connector (2V) in test harness V to connector (AB32). 5) Measure the resistance between connector (3V) terminals in the test harness V. ***Connector & terminal*** ***(3V) No. 2 — (3V) No. 6:*** ***(3V) No. 1 — (3V) No. 7:***	Is the resistance less than 10 Ω?	Go to step **5**.	Replace the airbag rear harness along with body harness.
5	**CHECK AIRBAG REAR HARNESS (BETWEEN SIDE AIRBAG SENSOR LH AND CURTAIN AIRBAG SENSOR LH).** Measure the resistance between connector (3V) in test harness V and chassis ground, and the resistance between connector (3V) in test harness V. ***Connector & terminal*** ***(3V) No. 2 — Chassis ground:*** ***(3V) No. 1 — Chassis ground:*** ***(3V) No. 1 — (3V) No. 2:***	Is the resistance 1 MΩ or more?	Go to step **6**.	Replace the airbag rear harness along with body harness.
6	**CHECK AIRBAG CONTROL MODULE.** 1) Connect all connectors. 2) Clear the memory. 3) Perform the Inspection Mode. 4) Read the DTC.	Is the same DTC displayed?	Go to step **7**.	Go to step **8**.
7	**REPLACE SIDE AIRBAG SENSOR (LH) AND CHECK AIRBAG CONTROL MODULE AFTER REPLACEMENT.** 1) Turn the ignition switch to OFF, disconnect the battery ground cable, and wait for 60 seconds or more. 2) Replace the side airbag sensor (LH). <Ref. to AB-74, REMOVAL, Side Airbag Sensor.> 3) Connect all connectors. 4) Clear the memory. 5) Perform the Inspection Mode. 6) Read the DTC.	Is the system normal?	Go to step **8**.	Replace the curtain airbag sensor (LH). <Ref. to AB-80, REMOVAL, Curtain Airbag Sensor.> Replace the airbag control module if not operating normally even after replacing the sensor. <Ref. to AB-64, REMOVAL, Airbag Control Module.>
8	**CHECK FOR ANY OTHER DTC ON DISPLAY.**	Is any other DTC displayed?	Check DTC using "List of Diagnostic Trouble Code (DTC)". <Ref. to AB(diag)-38, List of Diagnostic Trouble Code (DTC).>	Finish the diagnosis.

BZ:DTC F5 SIDE SENSOR BUS LH COMMUNICATION ERROR

NOTE:
Refer to DTC F6 for details on DTC F5. <Ref. to AB(diag)-155, DTC F6 SIDE SENSOR BUS LH COMMUNICATION ERROR, Diagnostic Chart with Trouble Code.>

CA:DTC F6 SIDE SENSOR BUS LH COMMUNICATION ERROR

DTC DETECTING CONDITION:

- Open or short circuit in harness of side sensor bus (LH).
- Side airbag sensor (LH) or curtain airbag sensor (LH) are faulty.
- Airbag control module is faulty.

CAUTION:

Before performing diagnosis, refer to "CAUTION" in "General Description". <Ref. to AB(diag)-4, CAUTION, General Description.>

WIRING DIAGRAM:

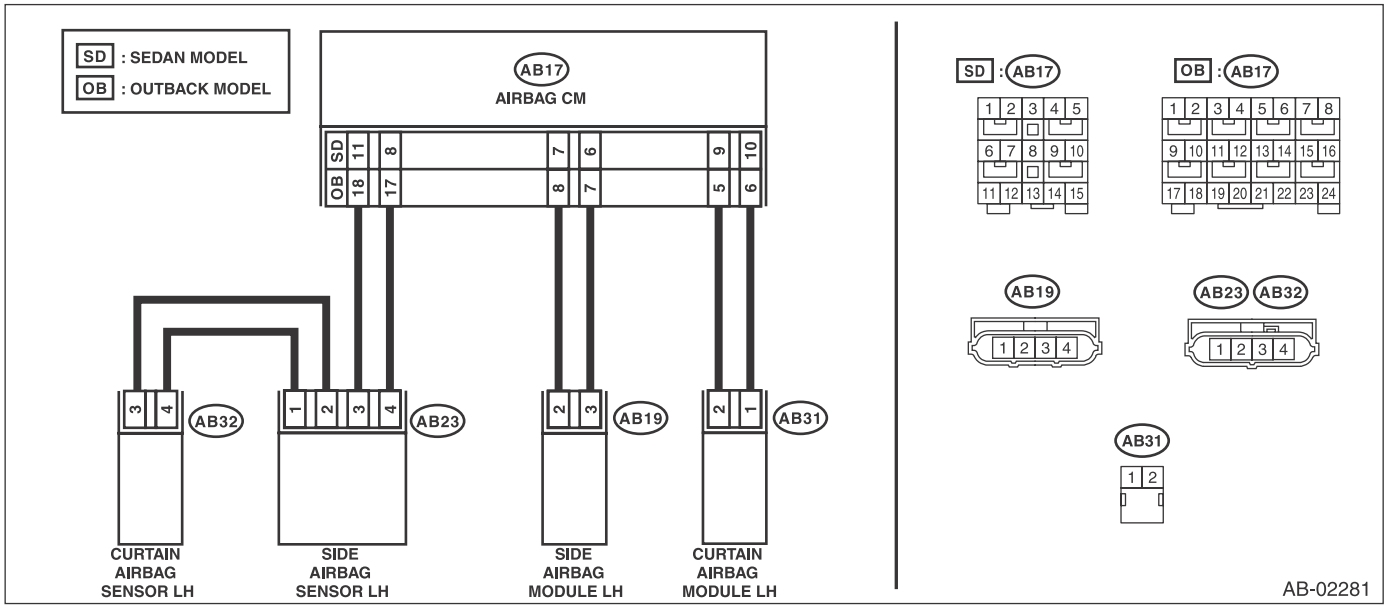

Step		Check	Yes	No
1	**CHECK POOR CONTACT OF CONNECTORS.** Check for poor contact of the connectors (AB17, AB23, AB32) between the airbag control module and the curtain airbag sensor (LH).	Is there poor contact?	Replace the airbag rear harness along with body harness.	Go to step **2**.

	Step	Check	Yes	No
2	**CHECK AIRBAG REAR HARNESS (BETWEEN SIDE AIRBAG SENSOR LH AND CURTAIN AIRBAG SENSOR LH).** 1) Turn the ignition switch to OFF, disconnect the battery ground cable, and wait for 60 seconds or more. 2) Disconnect the connector (AB21) from seat belt pretensioner (LH). 3) Disconnect the connector (AB31) from curtain airbag module (LH). 4) Disconnect connectors (AB19) and (AB20) from side airbag module (LH). 5) Disconnect the connector (AB23) in the side airbag sensor (LH). 6) Connect the connector (AB23) of side airbag sensor (LH) and the connector (1AI) in the test harness AI. 7) Connect the connector (2AI) in the test harness AI and the connector (1V) in the test harness V. 8) Disconnect the connector (AB32) from curtain airbag sensor (LH), and connect the connector (2V) in test harness V to connector (AB32). 9) Measure the resistance between connector (3V) terminals in the test harness V. ***Connector & terminal*** ***(3V) No. 2 — (3V) No. 6:*** ***(3V) No. 1 — (3V) No. 7:***	Is the resistance less than 10 Ω?	Go to step **3**.	Replace the airbag rear harness along with body harness.
3	**CHECK AIRBAG REAR HARNESS (BETWEEN SIDE AIRBAG SENSOR AND CURTAIN AIRBAG SENSOR LH).** Measure the resistance between connector (3V) in test harness V and chassis ground, and the resistance between connector (3V) terminals in test harness V. ***Connector & terminal*** ***(3V) No. 1 — Chassis ground:*** ***(3V) No. 2 — Chassis ground:*** ***(3V) No. 1 — (3V) No. 2:***	Is the resistance 1 MΩ or more?	Go to step **4**.	Replace the airbag rear harness along with body harness.

	Step	Check	Yes	No
4	**CHECK AIRBAG REAR HARNESS (BETWEEN AIRBAG CONTROL MODULE AND SIDE AIRBAG SENSOR LH).** 1) Disconnect the connectors (AB17, AB6, and AB18) from airbag control module. 2) Connect the connector (1AG) in the test harness AG to the connectors (AB6, AB17, and AB18). NOTE: For sedan models, connect test harness AH between the connectors (AB6, AB17, AB18) and (1AG). 3) Disconnect the connector (AB23) in the side airbag sensor (LH) from the connector (1AI) in the test harness AI. 4) Disconnect the connector (2AI) in the test harness AI from the connector (1V) in the test harness V. 5) Connect the connector (2V) in the test harness V to the connector (AB23). 6) Measure the resistance between connector (5AG) in the test harness AG and connector (3V) in the test harness V. ***Connector & terminal*** ***Sedan model*** ***(5AG) No. 14 — (3V) No. 1:*** ***(5AG) No. 15 — (3V) No. 2:*** ***OUTBACK model*** ***(5AG) No. 14 — (3V) No. 1:*** ***(5AG) No. 16 — (3V) No. 2:***	Is the resistance less than 10 Ω?	Go to step **5**.	Replace the airbag rear harness along with body harness.
5	**CHECK AIRBAG REAR HARNESS (BETWEEN SIDE AIRBAG SENSOR LH AND CURTAIN AIRBAG SENSOR LH).** Measure the resistance between connector (3V) in test harness V and chassis ground, and the resistance between connector (3V) terminals in test harness V. ***Connector & terminal*** ***(3V) No. 1 — Chassis ground:*** ***(3V) No. 2 — Chassis ground:*** ***(3V) No. 1 — (3V) No. 2:***	Is the resistance 1 MΩ or more?	Go to step **6**.	Replace the airbag rear harness along with body harness.
6	**CHECK AIRBAG CONTROL MODULE.** 1) Connect all connectors. 2) Clear the memory. 3) Perform the Inspection Mode. 4) Read the DTC.	Is the same DTC displayed?	Go to step **7**.	Go to step **8**.
7	**REPLACE SIDE AIRBAG SENSOR (LH) AND CHECK AIRBAG CONTROL MODULE AFTER REPLACEMENT.** 1) Turn the ignition switch to OFF, disconnect the battery ground cable, and wait for 60 seconds or more. 2) Replace the side airbag sensor (LH). <Ref. to AB-74, REMOVAL, Side Airbag Sensor.> 3) Connect all connectors. 4) Clear the memory. 5) Perform the Inspection Mode. 6) Read the DTC.	Is the system normal?	Go to step **8**.	Replace the curtain airbag sensor (LH). <Ref. to AB-80, REMOVAL, Curtain Airbag Sensor.> Replace the airbag control module if not operating normally even after replacing the sensor. <Ref. to AB-64, REMOVAL, Airbag Control Module.>

Step		Check	Yes	No
8	CHECK FOR ANY OTHER DTC ON DISPLAY.	Is any other DTC displayed?	Check DTC using “List of Diagnostic Trouble Code (DTC)”. <Ref. to AB(diag)-38, List of Diagnostic Trouble Code (DTC).>	Finish the diagnosis.

OCCUPANT DETECTION SYSTEM (DIAGNOSTICS)

OD(diag)

		Page
1.	Basic Diagnostic Procedure	2
2.	Check List for Interview	3
3.	General Description	4
4.	Electrical Component Location	7
5.	Airbag Connector	8
6.	Control Module I/O Signal	9
7.	Subaru Select Monitor	10
8.	Read Diagnostic Trouble Code (DTC)	11
9.	Inspection Mode	12
10.	Clear Memory Mode	13
11.	Display of Status Information	14
12.	System Calibration (Rezeroing)	15
13.	Airbag Warning Light Illumination Pattern	16
14.	Passenger's Airbag ON/OFF Indicator Light Illumination Pattern	17
15.	List of Diagnostic Trouble Code (DTC)	18
16.	Diagnostic Procedure with Diagnostic Trouble Code (DTC)	19

1. Basic Diagnostic Procedure

A: PROCEDURE

Step		Check	Yes	No
1	**CHECK WARNING LIGHT.** Check whether the airbag warning light in the combination meter is lit.	Does the airbag warning light illuminate?	Go to step **2**.	Perform the diagnosis according to phenomenon of the problem.
2	**READ DTC.** 1) Turn the ignition switch to OFF. 2) Connect the Subaru Select Monitor to data link connector. 3) Turn the ignition switch to ON and run the Subaru Select Monitor. 4) Read the DTC. <Ref. to OD(diag)-11, OPERATION, Read Diagnostic Trouble Code (DTC).> NOTE: If the communication function of the Subaru Select Monitor cannot be executed normally, check the communication circuit. <Ref. to AB(diag)-26, COMMUNICATION FOR INITIALIZING IMPOSSIBLE, INSPECTION, Subaru Select Monitor.> 5) Record all DTCs and freeze frame data.	Is DTC displayed?	Go to step **3**.	Go to "Airbag Warning Light Failure"<Ref. to AB(diag)-34, Airbag Warning Light Failure.>.
3	**PERFORM DIAGNOSIS.** 1) Determine the possible cause "List of Diagnostic Trouble Code (DTC)"<Ref. to OD(diag)-18, List of Diagnostic Trouble Code (DTC).>. 2) Inspect the DTC using "List of Diagnostic Trouble Code (DTC)". 3) Repair the trouble cause. 4) Perform the Clear Memory Mode. <Ref. to OD(diag)-13, Clear Memory Mode.> 5) Perform the Inspection Mode. <Ref. to OD(diag)-12, Inspection Mode.> 6) Read any other DTCs displayed.	Is DTC displayed?	Perform the procedure 1) to 5) in step 3.	Finish the diagnosis.

2. Check List for Interview

A: CHECK

Customer's name		Inspector's name	
Date vehicle brought in	/ /	Registration No.	
Odometer reading	km miles	V.I.N.	
Date problem occurred	/ /	Registration year	/ /
Weather	❑ Fine ❑ Cloudy ❑ Rainy ❑ Snowy ❑ Others :		
Temperature	°C (°F)		
Road condition	❑ Flat road ❑ Uphill ❑ Downhill ❑ Gravel road ❑ Others :		
Vehicle operation	❑ Starting ❑ Idling ❑ Driving ❑ Constant speed ❑ Accelerating ❑ Decelerating ❑ Turning ❑ Others :		
Details of problem			
Airbag warning light operation	❑ Normal (After turning the ignition switch to ON, illuminates for 6 seconds then goes off.) ❑ Remains ON ❑ Remains OFF		
Passenger's airbag ON/OFF indicator does not operate.	❑ Normal (After turning the ignition switch to ON, illuminates for 6 seconds then goes off for 2 seconds; Lights ON (adult) or OFF (children/unoccupied).) ❑ Both remain ON ❑ Both remain OFF		
DTC output	❑ OK code ❑ DTC: (Code:)		

3. General Description

A: CAUTION

1) If the seat cushion cover is removed or replaced, make sure to perform the occupant detection system adjustment after installing the seat to the vehicle. <Ref. to OD(diag)-15, System Calibration (Rezeroing).> Failure to do so may cause improper operation of the occupant detection system.
2) The occupant detection system (passenger seat only) control module and the occupant detection sensor are fixed to the seat cushion frame. Never remove the occupant detection control module or the occupant detection sensor from the seat cushion frame.
3) Do not replace the seat cushion pad by itself. Always replace the seat cushion pad & frame assembly as a set. The seat cushion pad and cushion frame are adjusted as a set at the time of manufacture. If cushion pads and cushion frames are combined from those of other vehicles or other sets, the occupant detection system may not operate properly.
4) If the seat cushion cover is removed, make sure to replace the hang wire on the seat cushion cover side with a new wire.
5) Never connect the battery in reverse polarity. Occupant detection system may be destroyed instantly.
6) Do not disconnect the battery terminals while the engine is running. A large counter electromotive force will be generated in the generator, and this voltage may damage electronic parts such as occupant detection control module.
7) Before disconnecting the connectors of each sensor and control module, be sure to turn the ignition switch to OFF and wait for 60 seconds or more. Occupant detection control module may be damaged.
8) Every occupant detection system-related part is a precision part. Do not drop them.

CAUTION:
• Do not use electrical test devices on airbag system wiring harnesses or connector circuits.
• Be careful not to damage the airbag system wiring harness, when servicing the occupant detection system.
• Refer to CAUTION in Airbag System when repairing occupant detection system. <Ref. to AB-9, CAUTION, General Description.>

B: INSPECTION

Measure the battery voltage and check electrolyte.

Standard voltage:
12 V

Specific gravity:
1.260 or more

Fluid level:
Between the upper level and lower level

C: PREPARATION TOOL

CAUTION:
To measure the voltage and resistance of airbag system and occupant detection system components, be sure to use the specified test harness.

1. SPECIAL TOOL

ILLUSTRATION	TOOL NUMBER	DESCRIPTION	REMARKS
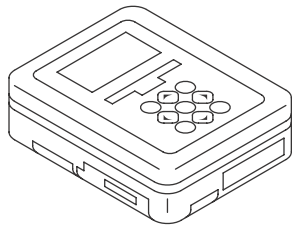 ST1B022XU0	1B022XU0	SUBARU SELECT MONITOR III KIT	Used for troubleshooting the electrical system.

- TEST HARNESS Y

ILLUSTRATION	TOOL NUMBER	DESCRIPTION	REMARKS
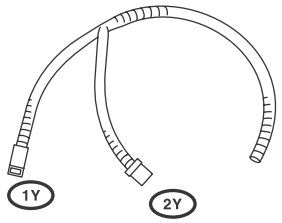 ST98299AG040	98299AG040	TEST HARNESS Y	Used for troubleshooting seat belt buckle switch.

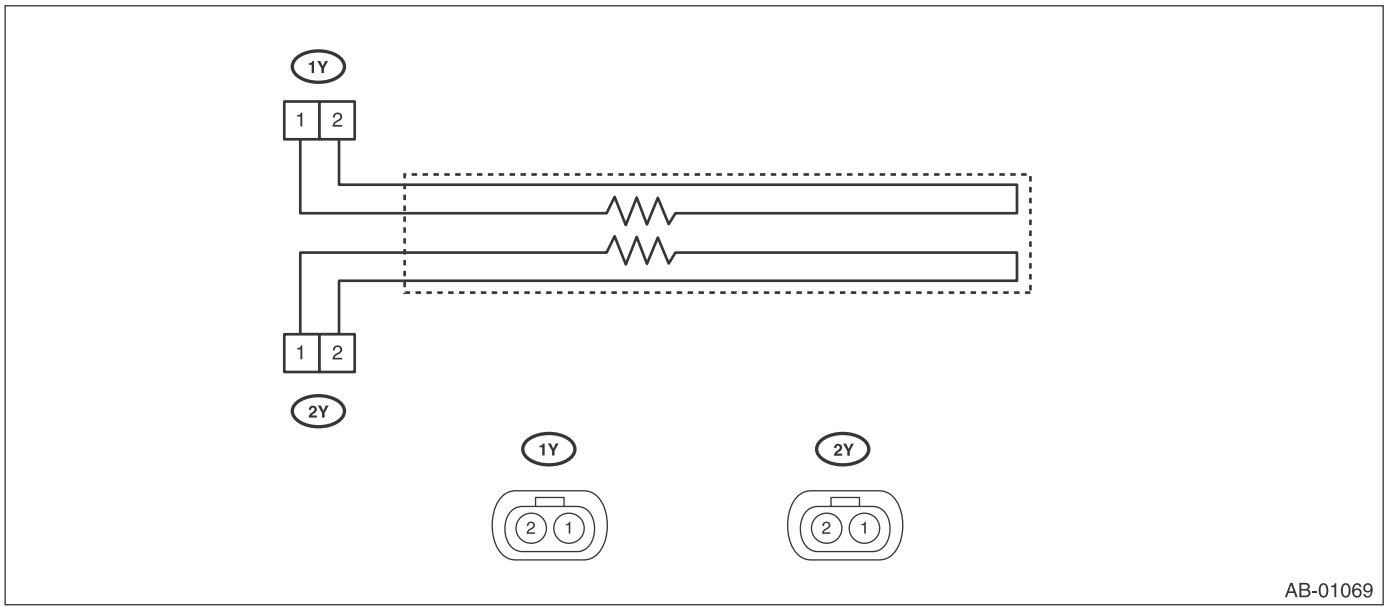

AB-01069

- TEST HARNESS AE

ILLUSTRATION	TOOL NUMBER	DESCRIPTION	REMARKS
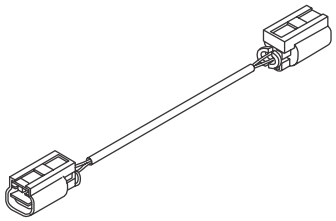 ST98299XA030	98299XA030	TEST HARNESS AE	TEST HARNESS Y ADAPTER HARNESS Used for troubleshooting seat belt buckle switch.

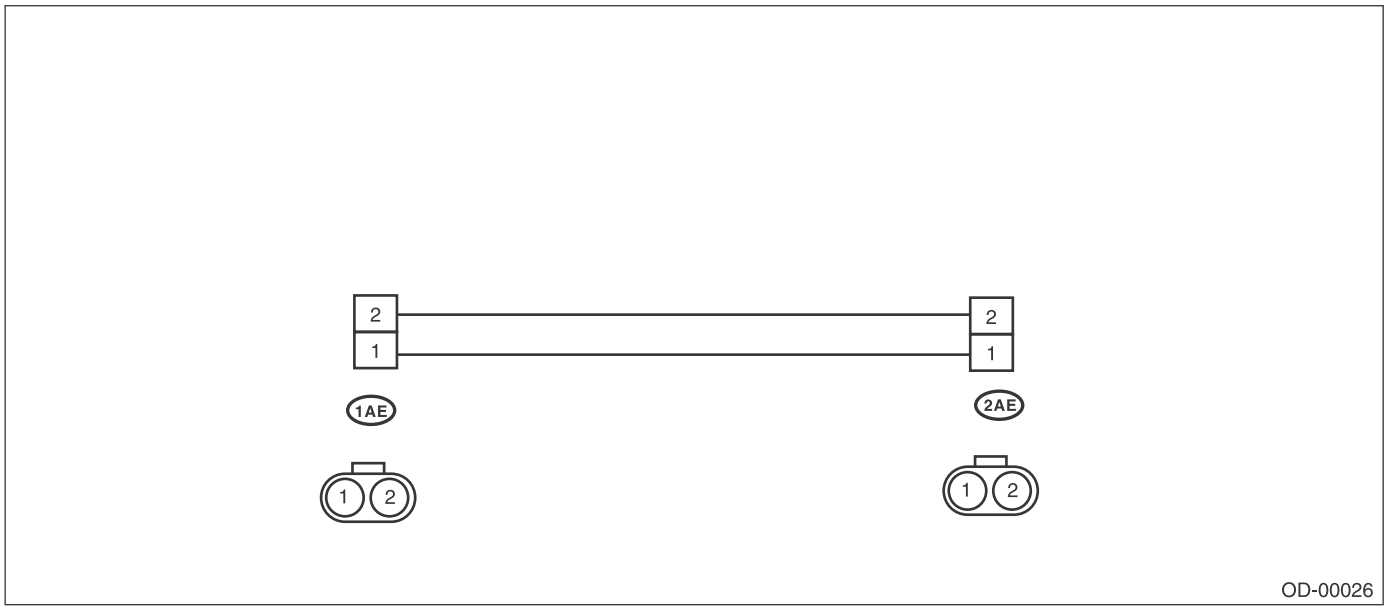

2. GENERAL TOOL

TOOL NAME	REMARKS
Circuit tester	Used for measuring resistance, voltage and current.

4. Electrical Component Location

A: LOCATION

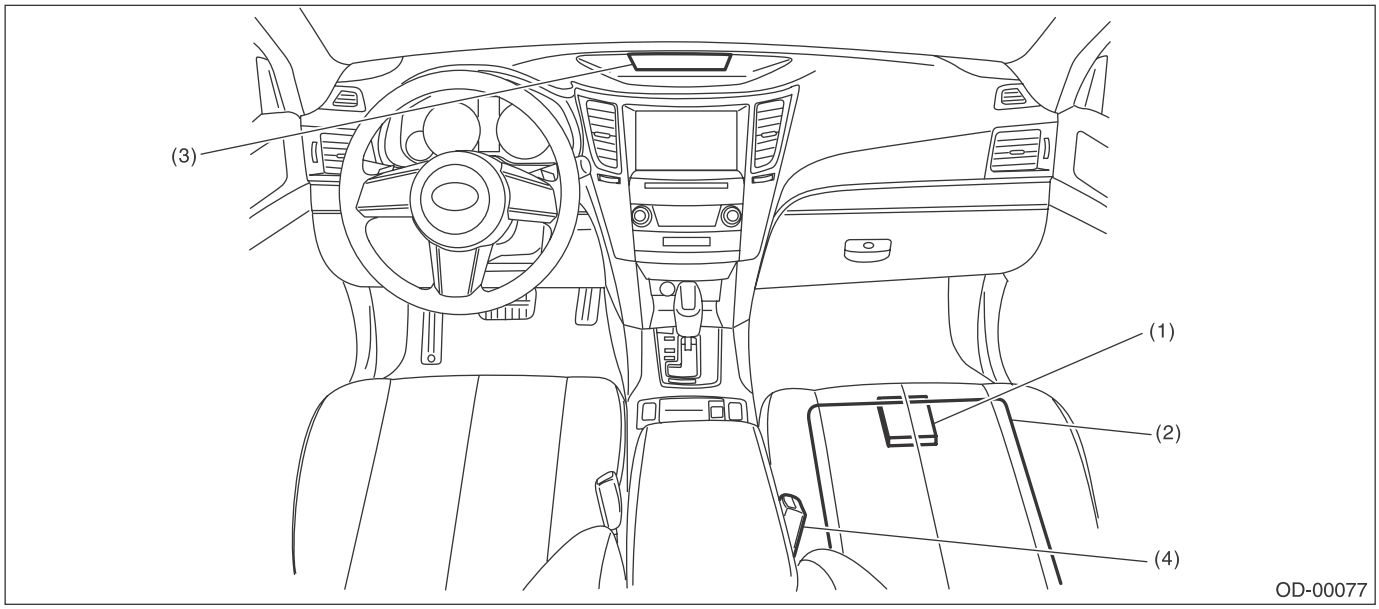

(1) Occupant detection control module
(2) Occupant detection sensor
(3) Airbag ON/OFF indicator light
(4) Buckle switch (passenger's side)

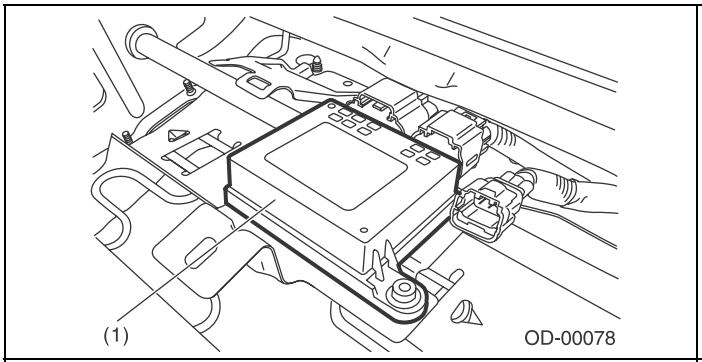

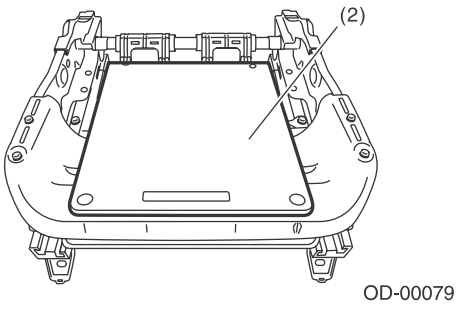



5. Airbag Connector

A: PROCEDURE

1. OCCUPANT DETECTION SYSTEM (BETWEEN AIRBAG REAR HARNESS AND SEAT HARNESS)

1) How to disconnect:
Push the lock arm (A), and disconnect the connector.

CAUTION:
When pulling the slide lock or disconnecting connector, be sure to hold the connector, not the harness.

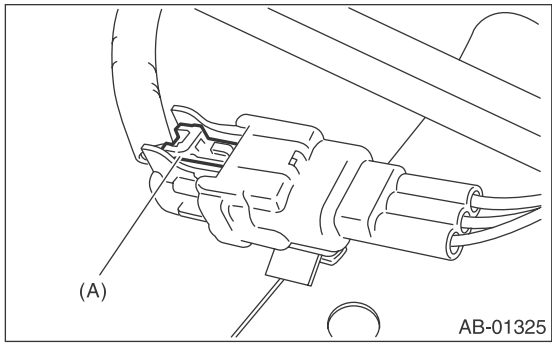

2) How to connect:
Holding the connector, push it in securely until a clicking sound is heard.

CAUTION:
Be sure to insert the connector in until it is locked. Then pull it gently to make sure that it is locked.

2. AIRBAG CONTROL MODULE

Refer to Airbag System section. <Ref. to AB-19, AIRBAG CONTROL MODULE, PROCEDURE, Airbag Connector.>

3. BUCKLE SWITCH RH

Refer to Airbag System section. <Ref. to AB-25, BUCKLE SWITCH RH, PROCEDURE, Airbag Connector.>

6. Control Module I/O Signal

A: ELECTRICAL SPECIFICATION

CAUTION:
Never remove the occupant detection control module, occupant detection sensor or seat frame, because they are integrated into one unit.

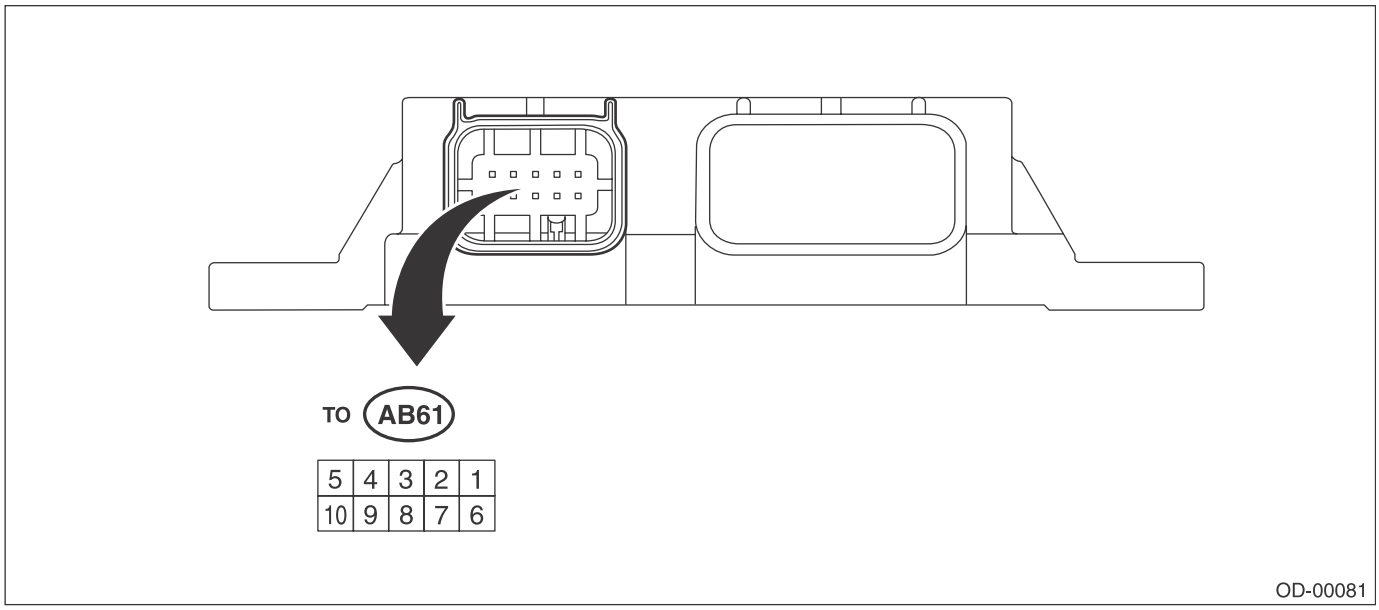

Terminal name	Terminal No.	Input/output value	Remarks
IG – power supply	5	9 — 16 V	When ignition switch is ON
Airbag control module communication (COM)	3	Open collector terminal	Communication line
Airbag control module communication (GND)	4	0 V	Ground
Buckle switch	9	0 — IG voltage	Ignition voltage when switch is ON
Buckle switch (GND)	8	0 V	Switch ground

B: WIRING DIAGRAM

Refer to the electrical wiring diagram. <Ref. to WI-172, WIRING DIAGRAM, Occupant Detection System.>

7. Subaru Select Monitor

A: OPERATION

For detailed operation procedures, refer to the “PC application help for Subaru Select Monitor”.

B: INSPECTION

1. COMMUNICATION FOR INITIALIZING IMPOSSIBLE

DETECTING CONDITION:
Defective harness connector
TROUBLE SYMPTOM:
Communication is impossible between the airbag control module and the Subaru Select Monitor.
Refer to “Communication for Initializing Impossible” in AIRBAG SYSTEM (DIAGNOSTICS). <Ref. to AB(diag)-26, COMMUNICATION FOR INITIALIZING IMPOSSIBLE, INSPECTION, Subaru Select Monitor.>

8. Read Diagnostic Trouble Code (DTC)

A: OPERATION

Read out the DTC stored in airbag control module. For operation procedures, refer to AIRBAG SYSTEM (DIAGNOSTICS). <Ref. to AB(diag)-29, OPERATION, Read Diagnostic Trouble Code (DTC).>

NOTE:
For details concerning DTCs, refer to the List of Diagnostic Trouble Code (DTC) (airbag system, occupant detection system). <Ref. to AB(diag)-38, List of Diagnostic Trouble Code (DTC).> <Ref. to OD(diag)-18, List of Diagnostic Trouble Code (DTC).>

9. Inspection Mode

A: PROCEDURE

Recreate the circumstance by referring to the conditions described in the checklist.

10.Clear Memory Mode

A: OPERATION

For operation procedures, refer to AIRBAG SYSTEM (DIAGNOSTICS). <Ref. to AB(diag)-31, OPERATION, Clear Memory Mode.>

11.Display of Status Information

A: OPERATION

Check the operating condition of each sensor in the event of malfunction in seat belt buckle switch and seat position sensor, or when the seat belt buckle switch and seat position sensor has been replaced.
1) On «Main Menu» display, select {Each System Check}.
2) On «System Selection Menu» display, select {Airbag System}.
3) On «Airbag System» display, select {Status Data}.
The following table is for support data.

Items	Display
Seat position sensor LH	—*2
Seat position sensor RH	—*2
Seat belt buckle switch LH	—*6
Seat belt buckle switch RH	Fastened*3/Not fastened*4/Other*5/Initial setting*1/—*6
Passenger's airbag control status	ON*7/OFF*8/Initial setting*1

*1: Displayed when it is initial
*2: Seat position sensor not supported
*3: Seat belt fastened
*4: Seat belt not fastened
*5: Displayed when data other than belt fastened or not fastened, such as breakdown, is input
*6: Seat belt buckle switch not supported
*7: Passenger's airbag operating state
*8: Passenger's airbag non-operating state

NOTE:
For detailed operation procedures, refer to "PC application help for Subaru Select Monitor".

12. System Calibration (Rezeroing)

A: OPERATION

NOTE:
When replacing the occupant detection system, or removing and disassembling the passenger's seat for any reason, (This includes, but is not limited to seat cover replacement.) always perform the system calibration after installing a seat in the vehicle. Also, confirm no aftermarket devices are connected to the vehicle.
"Re-zeroing", "Rezero" and "System Calibration" used in this document or on the Subaru Select Monitor display mean the same thing.
VEHICLE PREPARATION

- Park empty vehicle on a level surface.
- Check the following items to adjust the condition of the vehicle.
- Verify that all harnesses and connectors are fully seated.
- Verify that the seat assembly is correctly installed in the vehicle.
- Adjust the seat backrest to be fully upright.
- Adjust the seat slide position all the way back.

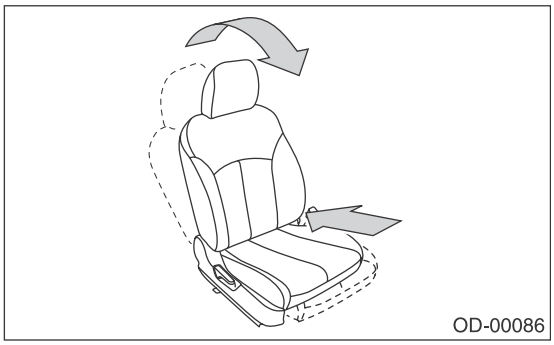

- Sit on the seat cushion to smooth the seat surface.
- Exit the seat.
- Do not place anything on the top of the seat cushion.
- Check that the passenger's seat belt is NOT inserted into the buckle, not buckled and fully retracted.
- Check that seat temperature is in a range from 0 to 40°C (32 to 104°F).

NOTE:
If the vehicle has been parked outside in temperatures outside of this range, bring the vehicle into an area with in this temperature range, lower all windows and allow temperature to stabilize. System Calibration (Rezero) will not be successful if the system is outside of this range during calibration.

1) Turn the ignition switch ON.
2) On «Main Menu» display, select {Each System Check}.
3) On «System Selection Menu» display, select {Air Bag System}.
4) On the {Air Bag System} display, select {Diagnostic Code(s) Display}.
5) Make sure that none of the following DTCs are present: 27, 29, 2A, 2C, 37. If any of these DTCs are active, read the DTC of the airbag system, and perform the diagnosis while referring to List of Diagnostic Trouble Code (DTC).
6) On «Main Menu» display, select {Each System Check}.
7) On «System Selection Menu» display, select {Occupant Detection System}.
8) On the {Occupant Detection System} display, select {Rezeroing}.

NOTE:
DO NOT TOUCH THE PASSENGER SEAT OR ROCK THE VEHICLE until the system calibration (Rezero) is completed. If you have touched the seat even if only once, re-perform the steps from the beginning.
9) Follow to Subaru Select Monitor screen to perform the System Calibration (Rezero).

NOTE:
When the «Re-zeroing Empty the passenger seat» is displayed, make sure that the passenger's seat is empty, airbag OFF indicator illuminates and airbag ON indicator does not illuminate. After verifying the condition, TURN IGNITION OFF and, within 10 seconds, TURN IGNITION ON again, then select [OK].
10) When the re-zeroing is ended normally, the «Re-zeroing is successfully completed» is displayed. And then turn the ignition switch to OFF to finish the Calibration.
11) During the system calibration process, if «Rezeroing is unsuccessful, See service manual» is displayed, Press "OK", and turn the ignition switch to OFF once and wait for a while. Please repeat the procedure from step 1), making sure to follow each step carefully.

NOTE:
There is no limit of recalibration attempts. If a calibration is unsuccessful, there is a possibility that the work procedure was not completed correctly.

NOTE:
If there is an active fault in the system, the recalibration will NOT be successful. Please fix the fault and then perform the system calibration.

13. Airbag Warning Light Illumination Pattern

A: INSPECTION

Turn the ignition switch to ON, and confirm that the airbag warning light remains on for approx. 6 seconds and then goes off afterwards.

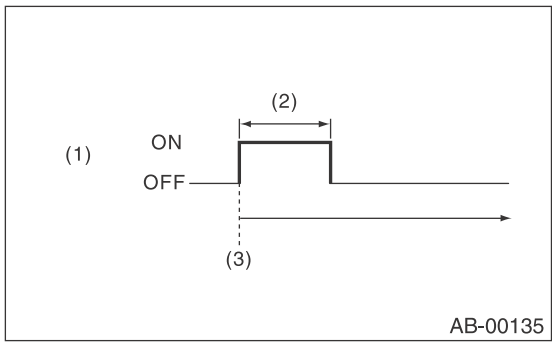

(1) Airbag warning light
(2) Approx. 6 sec.
(3) Ignition switch ON

14.Passenger's Airbag ON/OFF Indicator Light Illumination Pattern

A: INSPECTION

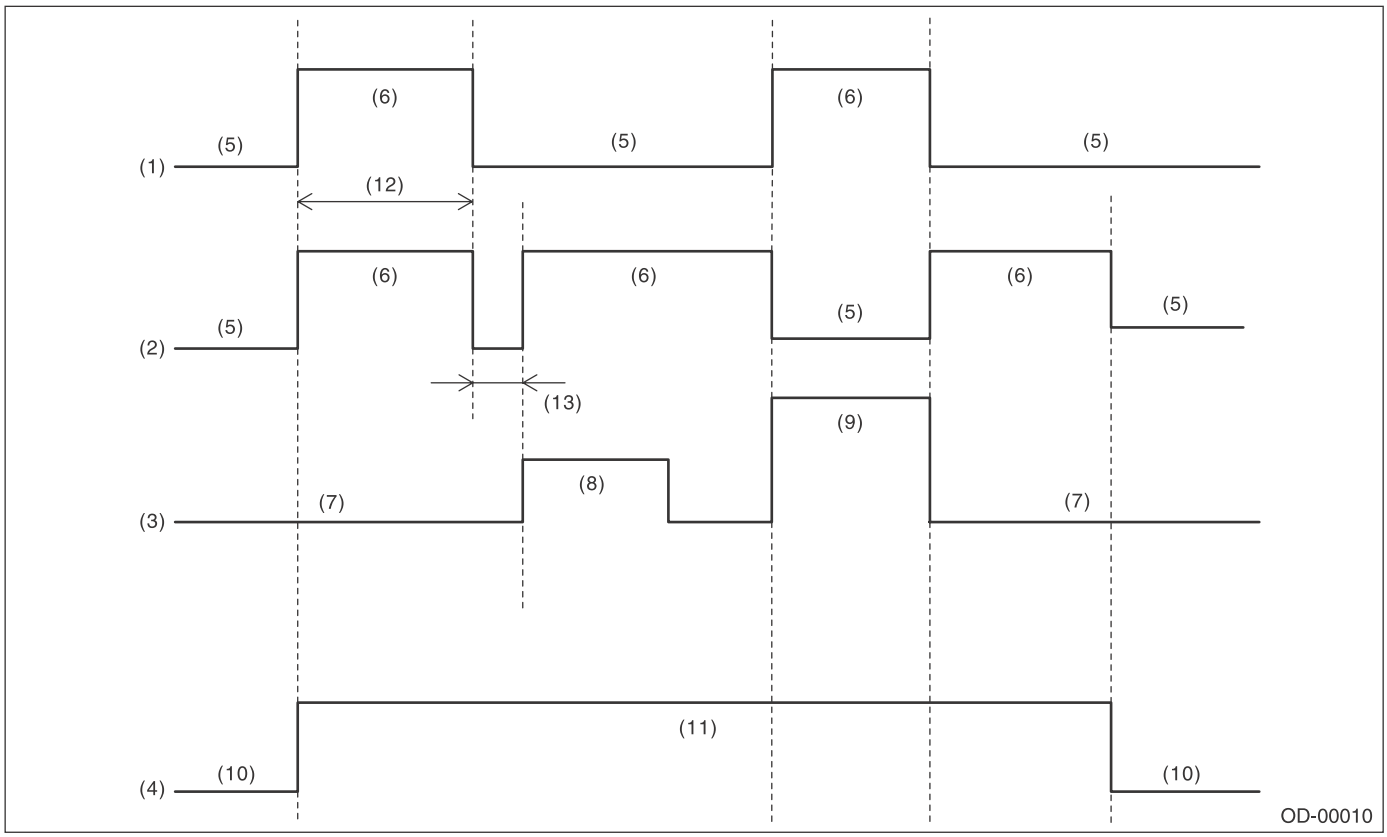

(1)	Passenger's airbag ON indicator light	(6)	Light ON	(10)	OFF
(2)	Passenger's airbag OFF indicator light	(7)	Empty	(11)	ON
(3)	Occupant seating	(8)	Child	(12)	Approx. 6 sec.
(4)	Ignition switch	(9)	Adult	(13)	Approx. 2 sec.
(5)	Light OFF				

15.List of Diagnostic Trouble Code (DTC)

A: LIST

DTC	Display	Content of diagnosis	Reference
27	ODS Communication Error	• Occupant detection control module and airbag control module communication is faulty. • Airbag rear harness circuit is open, shorted, shorted to ground or shorted to power supply. • Occupant detection harness is faulty. • Occupant detection system is faulty. • Airbag control module is faulty.	<Ref. to OD(diag)-19, DTC 27 ODS COMMUNICATION ERROR, Diagnostic Procedure with Diagnostic Trouble Code (DTC).>
29	ODS Failure	• Occupant detection sensor is faulty. • Occupant detection control module is faulty. • Occupant detection harness is faulty. • Fuse No. 25 (in joint box) is blown.	<Ref. to OD(diag)-19, DTC 29 ODS FAILURE, Diagnostic Procedure with Diagnostic Trouble Code (DTC).>
2A	ODS Calibration Error	• Occupant detection control module is faulty. • Calibration of occupant detection control module is initial setting or faulty.	<Ref. to OD(diag)-20, DTC 2A ODS CALIBRATION ERROR, Diagnostic Procedure with Diagnostic Trouble Code (DTC).>
2B	ODS System Wrong Parts	• Specification of occupant detection control module is improper. • Occupant detection control module is faulty.	<Ref. to OD(diag)-20, DTC 2B ODS SYSTEM WRONG PARTS, Diagnostic Procedure with Diagnostic Trouble Code (DTC).>
37	Buckle Switch RH Failure	• Passenger's buckle switch circuit is open, shorted or shorted to ground. • Occupant detection system is faulty. • Occupant detection harness is faulty.	<Ref. to OD(diag)-21, DTC 37 BUCKLE SWITCH RH FAILURE, Diagnostic Procedure with Diagnostic Trouble Code (DTC).>

16.Diagnostic Procedure with Diagnostic Trouble Code (DTC)

A: DTC 27 ODS COMMUNICATION ERROR

Perform the diagnosis following diagnostic procedures for the airbag system. <Ref. to AB(diag)-65, DTC 27 ODS COMMUNICATION ERROR, Diagnostic Chart with Trouble Code.>

B: DTC 29 ODS FAILURE

DTC DETECTING CONDITION:

- Occupant detection sensor is faulty.
- Occupant detection control module is faulty.
- Occupant detection harness is faulty.
- Rear airbag harness (RH) is faulty.
- Fuse No. 25 (in fuse box) is blown out.
- System calibration (Rezeroing) is unsuccessful.

	Step	Check	Yes	No
1	**CHECK POOR CONTACT OF CONNECTORS.** Check for poor contact of the connectors between the occupant detection control module and the airbag control module.	Is there poor contact?	Reconnect the connectors. If the fault is not fixed, replace the airbag harness.	Go to step **2**.
2	**CHECK DIAGNOSTIC TROUBLE CODE (DTC).** Read DTC of the airbag system.	Is another DTC displayed?	Perform the diagnosis according to DTC.	Go to step **3**.
3	**PERFORM SYSTEM CALIBRATION (REZEROING).** Perform system calibration (Rezeroing).	Did the system calibration (Rezeroing) complete properly?	Turn the ignition switch OFF once, then turn it ON again and check that the airbag warning light turns off.	Check the seat harness, and if any fault is found, replace the seat harness. If the fault is not fixed, replace the occupant detection system. <Ref. to SE-12, DISASSEMBLY, Front Seat.>

C: DTC 2A ODS CALIBRATION ERROR

DTC DETECTING CONDITION:

- Calibration of occupant detection control module is initial setting or faulty.
- Occupant detection control module is faulty.

	Step	Check	Yes	No
1	**CHECK DIAGNOSTIC TROUBLE CODE (DTC).** Read the DTC of the airbag system using the Subaru Select Monitor.	Is DTC other than 2A displayed?	Perform the diagnosis according to the displayed DTC.	Go to step **2**.
2	**PERFORM RE-ZEROING.** Perform system calibration using the Subaru Select Monitor. <Ref. to OD(diag)-15, System Calibration (Rezeroing).>	Did the system calibration complete properly?	Go to step **3**.	Replace the occupant detection system. <Ref. to SE-12, DISASSEMBLY, Front Seat.>
3	**CHECK DIAGNOSTIC TROUBLE CODE (DTC).** 1) Turn the ignition switch to OFF and wait for at least 60 seconds. 2) Turn the ignition switch to ON, and then read the DTC of the airbag system.	Is DTC other than DTC 2A displayed?	Perform the diagnosis according to the displayed DTC.	When DTC is 2A, replace the occupant detection system. <Ref. to SE-12, DISASSEMBLY, Front Seat.> When DTC is not displayed, end the diagnosis.

CAUTION:
When DTC other than DTC 2A is present, system calibration (re-zeroing) cannot be completed normally.
When occupant detection system DTC other than DTC 2A is present (27, 29, 2B, 37), perform the diagnosis of the DTCs other than 2A first.

D: DTC 2B ODS SYSTEM WRONG PARTS

DTC DETECTING CONDITION:

- Wrong occupant detection control module is installed.
- Occupant detection control module is faulty.

When DTC 2B is displayed, the occupant detection control module is faulty.
Replace the occupant detection control module with a genuine occupant detection control module.

E: DTC 37 BUCKLE SWITCH RH FAILURE

DTC DETECTING CONDITION:

- Passenger's buckle switch circuit is open, shorted or shorted to ground.
- Seat harness circuit is open, shorted or shorted to ground.
- Occupant detection control module is faulty.

WIRING DIAGRAM:

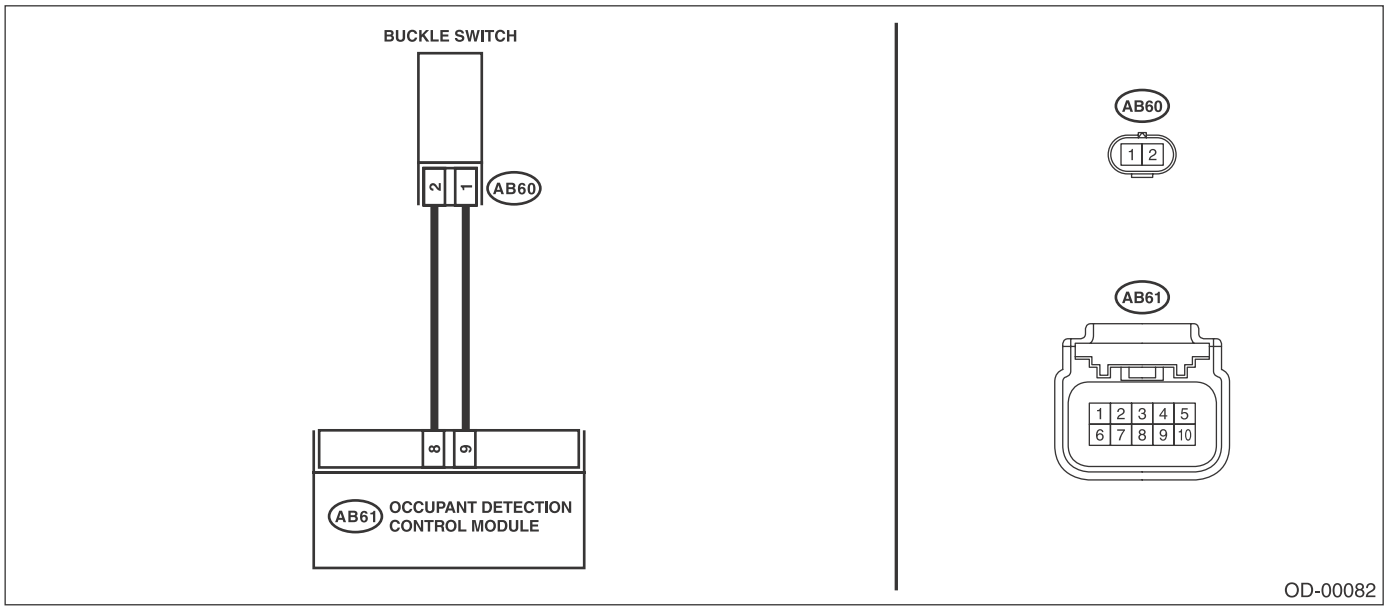

Step		Check	Yes	No
1	**CHECK POOR CONTACT OF CONNECTORS.** Check for poor contact of the connectors between the occupant detection control module and buckle switch.	Is there poor contact?	Reconnect the connectors. If the fault is not fixed, replace the airbag harness.	Go to step **2**.
2	**CHECK BUCKLE SWITCH.** 1) Turn the ignition switch to OFF, disconnect the battery ground cable, and wait for 60 seconds. 2) Disconnect the buckle switch connector (AB60). 3) Connect the test harness AE and test harness connector Y to buckle switch connector (AB60). 4) Connect the battery ground terminal and turn the ignition switch to ON.	Does the airbag warning light illuminate for 6 seconds and go off?	Replace the buckle switch. <Ref. to SB-17, OUTER BELT ASSY, REMOVAL, Front Seat Belt.>	Check the seat harness, and if any fault is found, replace the seat harness. If the fault is not fixed, replace the occupant detection system.

SEAT BELT SYSTEM

SB

Page

1. General Description 2
2. Pretensioner Connector 11
3. Inspection Locations After a Collision 12
4. Seat Belt Warning System 13
5. Front Seat Belt 17
6. Rear Seat Belt 31

1. General Description

A: COMPONENT

1. FRONT SEAT BELT

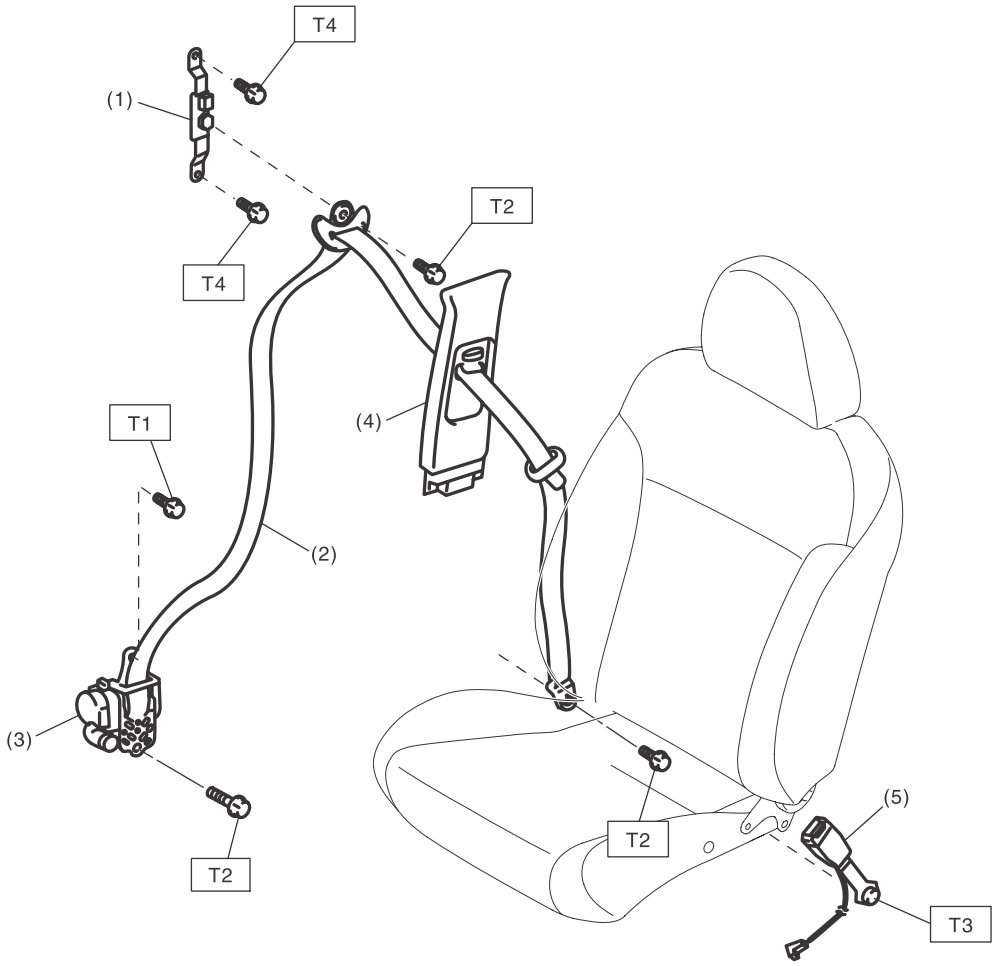

(1) Adjustable anchor ASSY
(2) Outer belt ASSY
(3) Seat belt retractor ASSY (Outer belt ASSY)
(4) Center pillar trim UPR
(5) Inner belt ASSY

Tightening torque:N·m (kgf-m, ft-lb)
T1: 7.5 (0.76, 5.5)
T2: 30 (3.06, 22.1)
T3: 38 (3.87, 28.0)
T4: 53 (5.4, 39.1)

2. REAR SEAT BELT (SEDAN MODEL)

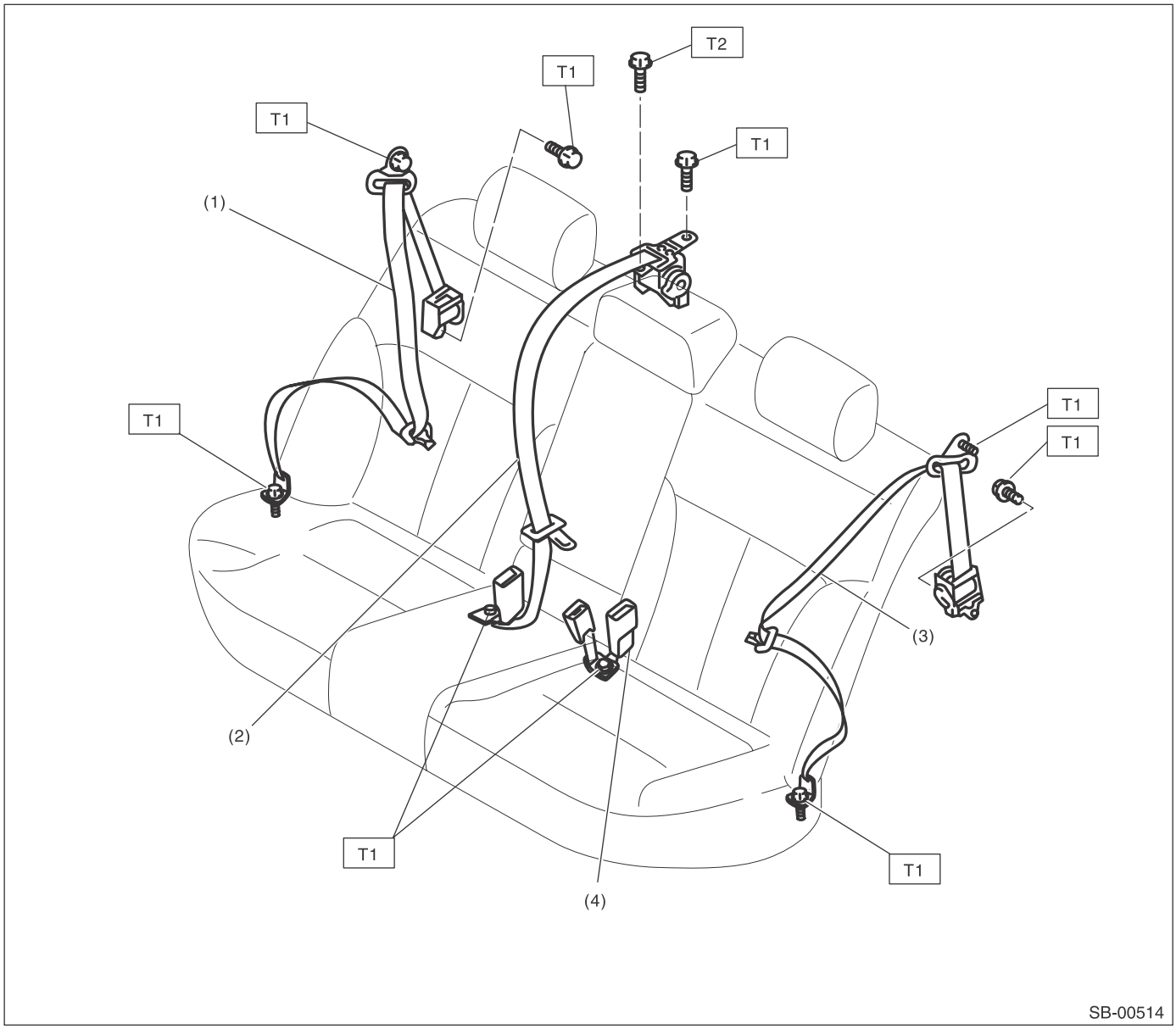

(1) Outer belt ASSY RH
(2) Shoulder belt ASSY CTR
(3) Outer belt ASSY LH
(4) Center belt ASSY LH

Tightening torque:N·m (kgf-m, ft-lb)
T1: 30 (3.06, 22.1)
T2: 53 (5.4, 39.1)

3. REAR SEAT BELT (OUTBACK MODEL)

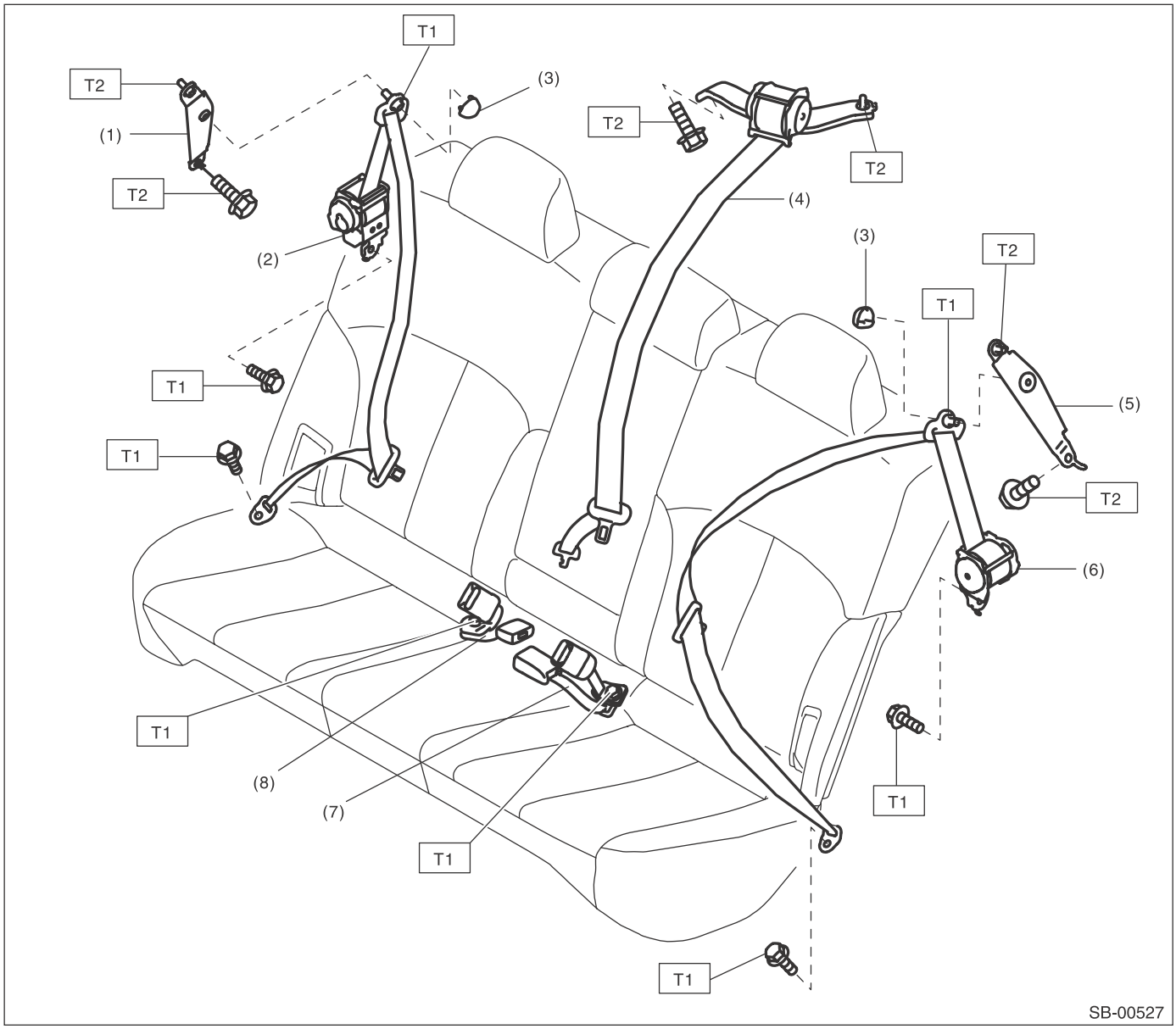

(1) Shoulder anchor bracket RH
(2) Outer belt ASSY RH
(3) Shoulder anchor cover
(4) Shoulder belt ASSY CTR
(5) Shoulder anchor bracket LH
(6) Outer belt ASSY LH
(7) Center belt ASSY LH
(8) Center belt ASSY RH

Tightening torque:N·m (kgf-m, ft-lb)
T1: 30 (3.06, 22.1)
T2: 53 (5.4, 39.1)

B: CAUTION

- Before starting the work, turn the ignition switch to OFF, disconnect the battery ground cable and wait for 60 seconds or more.
- The pretensioner system is fitted with a backup power supply. After disconnecting the battery ground cable, the pretensioner may operate if you do not wait for 60 seconds or more before starting pretensioner system servicing.
- Do not drop or apply any impact to the pretensioner.
- If oil, grease or water gets on the pretensioner, wipe it off immediately with a dry cloth.
- Do not expose the pretensioner to high temperature or flame.
- Do not allow current to flow through or voltage to reach the pretensioner. Do not use a circuit tester to check resistance of the pretensioner.
- Do not disassemble or attempt to repair the pretensioner. If it is dented, cracked or deformed, replace it with a new genuine part.
- Do not use the airbag or pretensioner parts from other vehicles. Always use a new genuine part for replacement.
- When handling a seat belt with deployed pretensioner, wear gloves and goggles. Wash your hands afterwards.
- Do not reuse a seat belt with deployed pretensioner.
- Before disposal, make sure to perform an operation process to the pretensioners.
- If material from the pretensioner enters the eyes or contacts skin during operation process, wash it away with clean water, and then consult a doctor.

C: PREPARATION TOOL

1. SPECIAL TOOL

- Subaru Select Monitor

ILLUSTRATION	TOOL NUMBER	DESCRIPTION	REMARKS
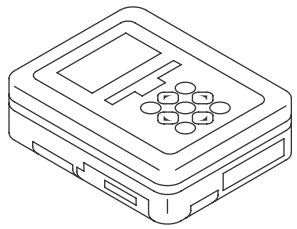 ST1B022XU0	1B022XU0	SUBARU SELECT MONITOR III KIT	Used for setting of each function and trouble-shooting for electrical system.

- TEST HARNESS AD

ILLUSTRATION	TOOL NUMBER	DESCRIPTION	REMARKS
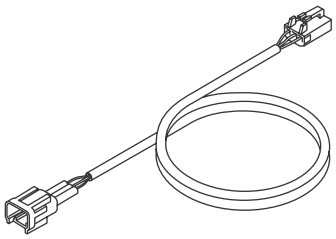 ST98299XA020	98299XA020	TEST HARNESS AD	Used when measuring voltage and resistance of the occupant detection system.

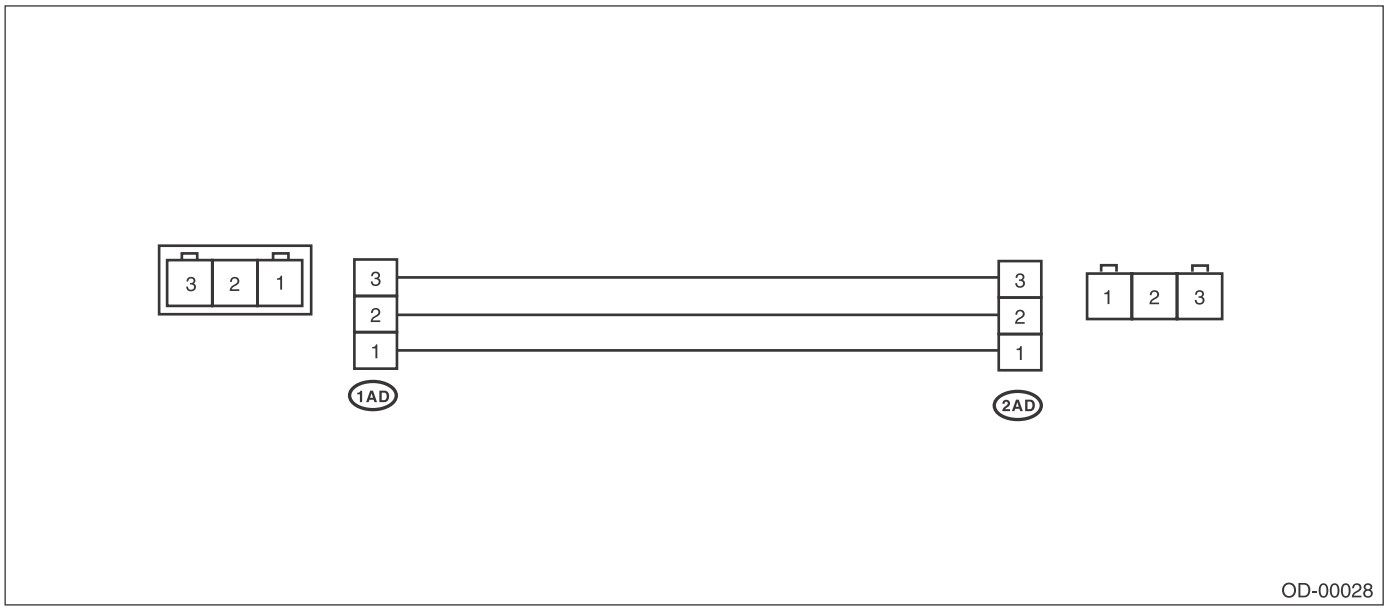

- TEST HARNESS AG

ILLUSTRATION	TOOL NUMBER	DESCRIPTION	REMARKS
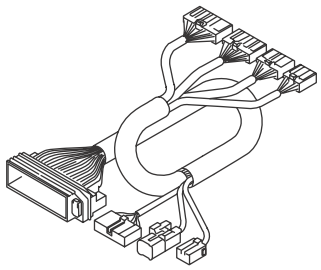 ST98299AG070	98299AG070	TEST HARNESS AG	Used when measuring voltage and resistance of airbag control module.

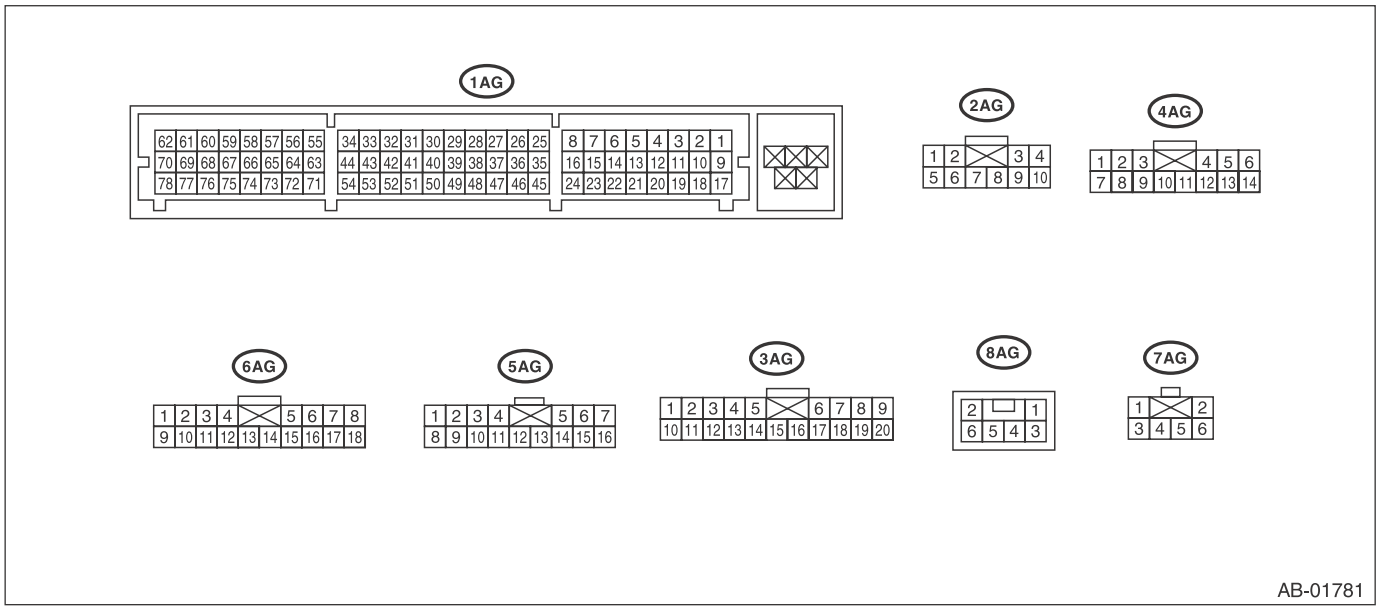

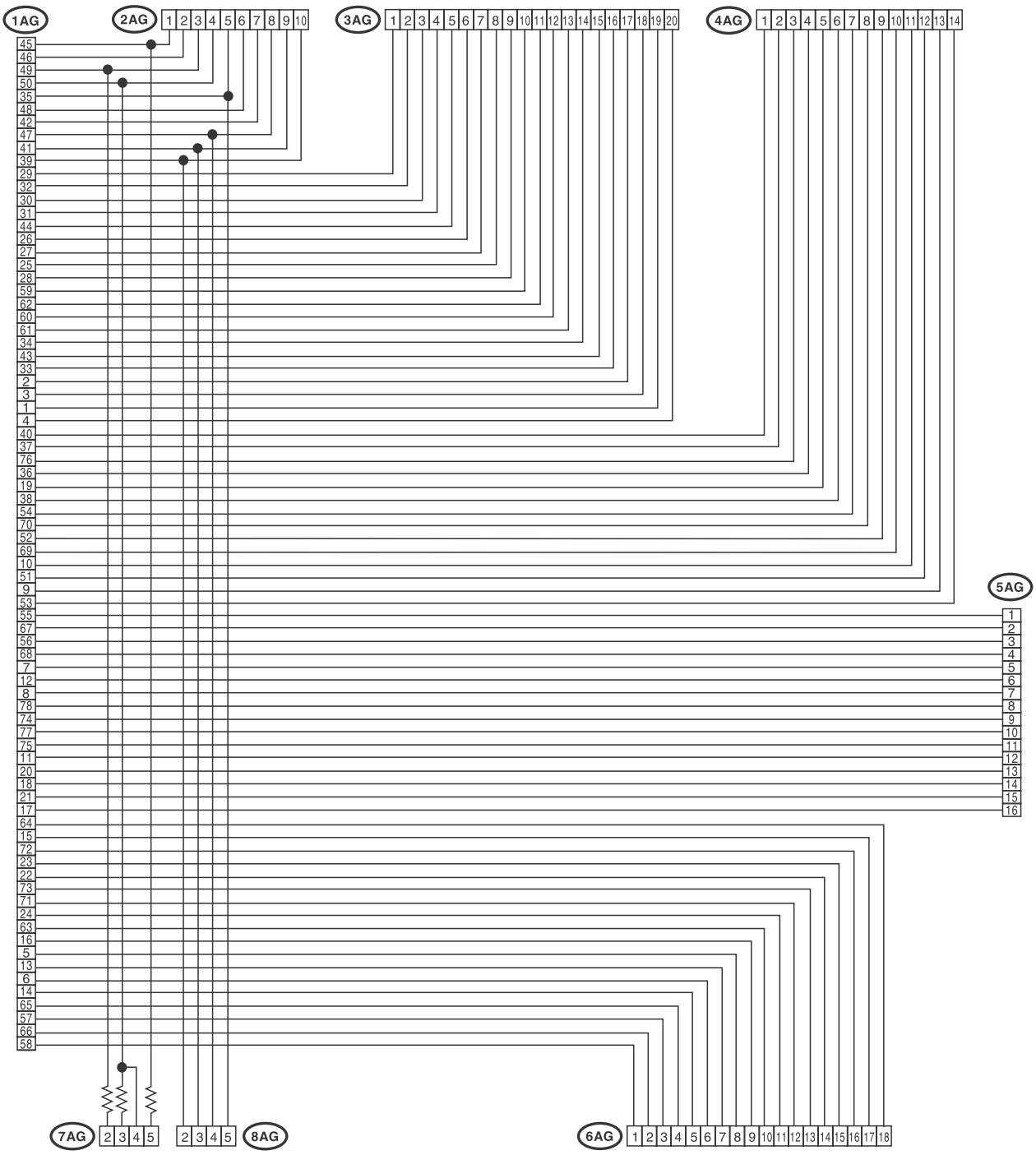
1AG
2AG
3AG
4AG
5AG
6AG
7AG
8AG
AB-01902

- TEST HARNESS Y

ILLUSTRATION	TOOL NUMBER	DESCRIPTION	REMARKS
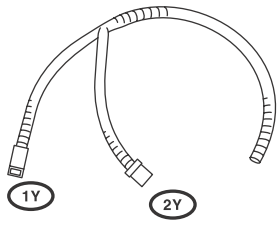 ST98299AG040	98299AG040	TEST HARNESS Y	Used for troubleshooting seat belt buckle switch.

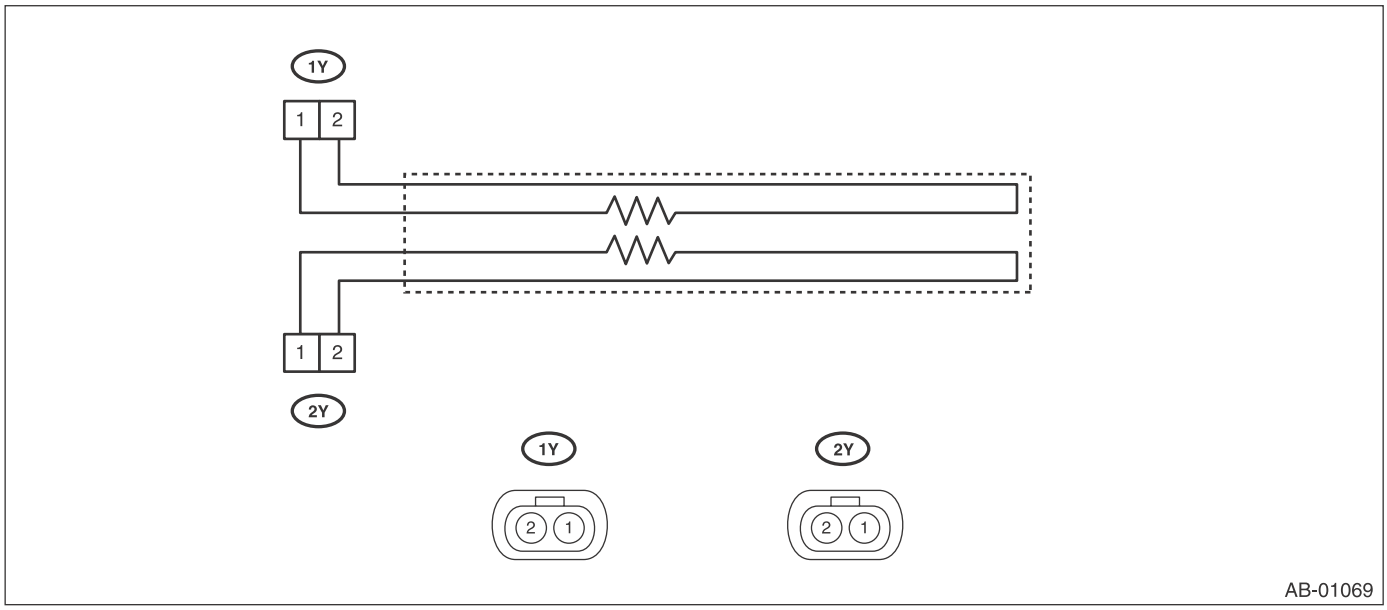

AB-01069

- AIRBAG RESISTOR

ILLUSTRATION	TOOL NUMBER	DESCRIPTION	REMARKS
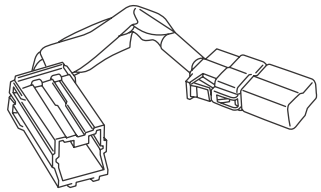 ST98299PA040	98299PA040	AIRBAG RESISTOR	Used in replacement of airbag module for which resistance value is same as airbag module. Two ST are required for diagnosis of two-stage inflator type airbag module.

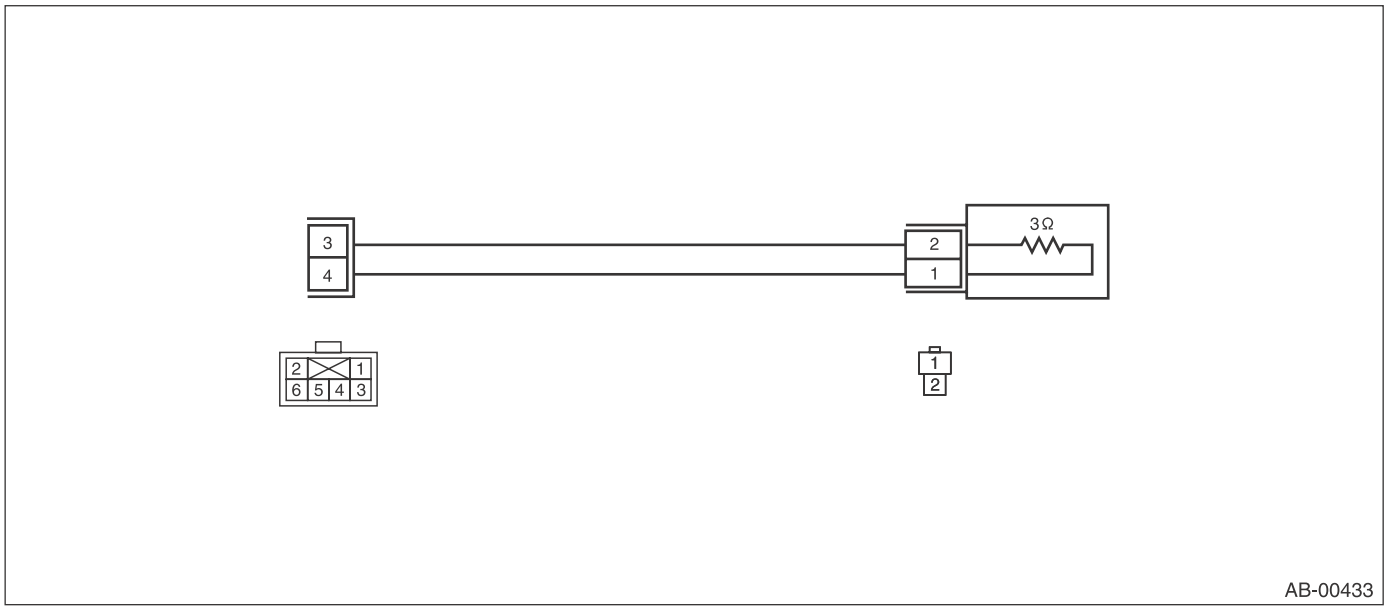

2. GENERAL TOOL

TOOL NAME	REMARKS
Circuit tester	Used for measuring resistance and voltage.

2. Pretensioner Connector

A: PROCEDURE

For connectors of seat belt pretensioner and buckle switch RH, refer to “Airbag System” or “Occupant Detection System”.

- Airbag system: <Ref. to AB-18, PROCEDURE, Airbag Connector.>
- Occupant detection system: <Ref. to OD(diag)-8, PROCEDURE, Airbag Connector.>

3. Inspection Locations After a Collision

A: INSPECTION

Refer to “Inspection Locations After a Collision” in the AIRBAG SYSTEM section. <Ref. to AB-26, Inspection Locations After a Collision.>

4. Seat Belt Warning System

A: WIRING DIAGRAM

Refer to “Seat Belt Warning System” in the wiring diagram. <Ref. to WI-203, WIRING DIAGRAM, Seat Belt Warning System.>

B: INSPECTION

CAUTION:
• Before diagnosing the airbag system, always turn the ignition switch to OFF, disconnect the battery ground cable, and then wait for 60 seconds or more.
• When replacing the airbag module, seat belt pretensioner, roll connector, control module, or sensors, reconnect the replacement part and check that the warning light operates normally.
• Before inspecting the airbag main harness, disconnect the driver’s side and passenger’s side airbag module connectors to ensure safety.
• Before inspecting the airbag rear harness, disconnect the side airbag module connectors, curtain airbag module connectors and seat belt pretensioner connectors to ensure safety.

	Step	Check	Yes	No
1	**CHECK CURRENT SETTINGS.** 1) Prepare the Subaru Select Monitor. 2) Turn the ignition switch to ON (engine OFF) and run the “PC application for Subaru Select Monitor”. 3) Select “Current Data Display” and read the data of “Belt Warning Switch”.	Is the belt warning display ON?	Go to step **2**.	Turn the belt warning ON with unit customization.
2	**CHECK CURRENT DATA.** 1) Select “Current Data Display” and read the data of “IG power supply voltage”. 2) Turn the ignition switch ON ←→ OFF.	Does the voltage change between 10 V or higher ←→ less than 1.5 V, matching the ignition switch ON ←→ OFF operation?	Go to step **3**.	Check the ignition switch circuit.
3	**CHECK FUNCTION.** 1) Sit in the driver’s seat and passenger’s seat, and disconnect the seat belts of both seats. 2) Turn the ignition switch to ON (engine OFF). 3) Check the illumination of the driver’s seat belt warning light in the combination meter and the passenger’s seat belt warning light in the clock, and the sounding of the buzzer.	Do the driver’s and passenger’s warning lights flash, and does the buzzer sound while the warning lights are flashing?	Go to step **4**.	• Malfunction of the driver’s seat belt warning light →Go to step **10**. • Malfunction of the passenger’s seat belt warning light →Go to step **16**. • The buzzer does not sound. →Go to step **6**.
4	**CHECK FUNCTION.** 1) Wait until the buzzer sound stops in step 3. (Approximately 6 seconds from starting to sound) 2) Fasten and detach the driver’s and passenger’s seat belts. 3) Check the illumination of the driver’s seat belt warning light in the combination meter and the passenger’s seat belt warning light in the clock.	Do each seat belt warning light illuminate ←→ turn off according to the action?	Go to step **5**.	• Malfunction of the driver’s seat belt warning light →Go to step **6**. • Malfunction of the passenger’s seat belt warning light →Go to step **12**.

Step		Check	Yes	No
5	**CHECK FUNCTION.** 1) Wait until the buzzer sound stops in step 3. (Approximately 6 seconds from starting to sound) 2) Start the engine, and set the vehicle speed to 15 km/h (9 MPH) or faster. 3) Check the driver's and passenger's seat belt warning lights, and sounding of the alarm buzzer.	Do the driver's and passenger's warning lights flash, and does the buzzer sound while the warning lights are flashing?	The seat belt warning system is normal.	Go to step **20**.
6	**CHECK CURRENT DATA.** 1) Select "Current Data Display" and read the data of the driver's seat belt switch. 2) Fasten and detach the seat belt buckle.	Does the seat belt SW display turn ON ←→ OFF according to the operation?	Go to step **10**.	Go to step **7**.
7	**CHECK HARNESS.** 1) Disconnect the negative terminal from the battery, and wait for 60 seconds or more. 2) Disconnect the connectors of the body integrated unit and the seat belt buckle switch. 3) Check for a short circuit to battery, open circuit or short circuit to ground between the body integrated unit and the seat belt buckle switch LH. ***Connector & terminal*** ***MANUAL SEAT*** ***(i84) No. 30 — (R108) No. 1:*** ***POWER SEAT*** ***(i84) No. 30 — (R381) No. 1:***	Is the harness normal?	Go to step **8**.	Repair or replace the harness.
8	**CHECK HARNESS.** Measure the resistance between the seat belt buckle switch LH and chassis ground. ***Connector & terminal*** ***MANUAL SEAT*** ***(R108) No. 2 — Chassis ground:*** ***POWER SEAT*** ***(R381) No. 2 — Chassis ground:***	Is the resistance less than 10 Ω?	Go to step **9**.	Repair or replace the harness.
9	**CHECK SEAT BELT BUCKLE SWITCH LH.** Measure the resistance between the connector terminals of the driver's seat belt switch when the driver's seat belt is fastened and detached. ***Connector & terminal*** ***MANUAL SEAT*** ***(R108) No. 1 — (R108) No. 2:*** ***POWER SEAT*** ***(R381) No. 1 — (R381) No. 2:***	Is the resistance when the belt is fastened 1 MΩ or more, and less than 10 Ω when the belt is detached?	Replace the body integrated unit. <Ref. to SL-72, REMOVAL, Body Integrated Unit.>	Replace the inner belt assembly LH. <Ref. to SB-17, OUTER BELT ASSY, REMOVAL, Front Seat Belt.>
10	**CHECK DTC.** Read the DTC using Subaru Select Monitor.	Are any body CAN related DTC detected?	Check the CAN according to DTC.	Go to step **11**.
11	**CHECK COMBINATION METER.** Perform the self-diagnosis of combination meter. <Ref. to IDI-6, SELF-DIAGNOSIS DISPLAY MODE, OPERATION, Combination Meter System.>	At the start of combination meter self diagnosis, did the buzzer sound and the seat belt warning light illuminate?	Replace the body integrated unit or the combination meter. Or, replace both. There may be a communication malfunction of the body integrated unit, or a reception malfunction of the combination meter.	Replace the combination meter. <Ref. to IDI-20, REMOVAL, Combination Meter.>

Step		Check	Yes	No
12	**CHECK CURRENT DATA.** 1) Sit in the passenger's seat. 2) Select "Current Data Display" and display the data of "P seatbelt SW input". 3) Fasten and detach the passenger's side seat belt buckle, and read the data of the seat belt switch. <Ref. to BC(diag)-13, OPERATION, Read Current Data.>	Does the seat belt switch display turn ON ⟷ OFF according to the operation of the seat belt buckle?	Go to step **16.**	Go to step **13.**
13	**CHECK AIRBAG SYSTEM AND OCCUPANT DETECTION SYSTEM.** Perform the check in accordance with the diagnostic procedure DTC 27 of the airbag system. <Ref. to AB(diag)-65, DTC 27 ODS COMMUNICATION ERROR, Diagnostic Chart with Trouble Code.>	Is there any problem on the inspection result?	Go to step **14.**	Repair or replace the harness.
14	**CHECK BUCKLE SWITCH RH.** Perform the check in accordance with the diagnostic procedure DTC 37 of the occupant detection system. <Ref. to OD(diag)-21, DTC 37 BUCKLE SWITCH RH FAILURE, Diagnostic Procedure with Diagnostic Trouble Code (DTC).>	Is there any problem on the inspection result?	Go to step **15.**	Repair or replace the harness.
15	**CHECK AIRBAG CONTROL MODULE AND BODY INTEGRATED UNIT.** Check the airbag control module, occupant detection sensor and seat belt buckle switch RH. Perform the check in accordance with the diagnostic procedure DTC 39 of the airbag system. <Ref. to AB(diag)-68, DTC 39 SEAT BELT WARNING FAILURE, Diagnostic Chart with Trouble Code.>	Is there any problem on the inspection result?	Replace the body integrated unit. <Ref. to SL-72, REMOVAL, Body Integrated Unit.>	Repair or replace the harness.
16	**CHECK HARNESS.** 1) Disconnect the clock connector. 2) Turn the ignition switch to ON. 3) Measure the voltage between the ignition power supply and the clock. ***Connector & terminal*** ***(i59) No. 8 (+) — Chassis ground (–):***	Is the voltage 10 V or more?	Go to step **17.**	Repair or replace the harness.
17	**CHECK HARNESS.** 1) Turn the ignition switch to OFF. 2) Disconnect the body integrated unit connector. 3) Check for a short circuit to battery, open circuit or short circuit to ground between the clock and chassis ground. ***Connector & terminal*** ***(i59) No. 6 — Chassis ground:***	Is the harness normal?	Go to step **18.**	Repair or replace the harness.
18	**CHECK HARNESS.** 1) Turn the ignition switch to OFF. 2) Disconnect the connector of combination meter. 3) Check for a short circuit to battery, open circuit or short circuit to ground between the clock and combination meter. ***Connector & terminal*** ***(i59) No. 5 — (i10) No. 3:***	Is the harness normal?	Go to step **19.**	Repair or replace the harness.

Step		Check	Yes	No
19	**CHECK CLOCK.** 1) Connect the clock connector. 2) Turn the ignition switch to ON. 3) Short the circuit between clock and chassis ground using a wire harness. ***Connector & terminal*** ***(i59) No. 6 — Chassis ground:***	Does passenger's seat belt warning light in the clock illuminate?	Replace the body integrated unit. <Ref. to SL-72, REMOVAL, Body Integrated Unit.>	Replace the clock. <Ref. to IDI-30, REMOVAL, Multi Display.>
20	**CHECK DTC.** Read the DTCs for all systems using the Subaru Select Monitor.	Is a DTC detected?	Perform a check according to the DTC.	Go to step **21**.
21	**CHECK CURRENT DATA.** Select "Current Data Display" and read the data of the "Front Wheel Speed". <Ref. to BC(diag)-13, OPERATION, Read Current Data.>	Does the data indicate the normal vehicle speed?	Go to step **11**.	Check the following items. • LAN system <Ref. to BC(diag)-2, Basic Diagnostic Procedure.> • VDC <Ref. to VDC(diag)-2, Basic Diagnostic Procedure.>

5. Front Seat Belt

A: REMOVAL

1. OUTER BELT ASSY

CAUTION:
• The airbag system is fitted with a backup power supply. After disconnecting the battery ground cable, the airbag may deploy if you do not wait for 60 seconds before starting the service of airbag system.
• Do not drop or subject the pretensioner to any impact.
• Since the pretensioner and bracket are integrated as a unit, do not disassemble them.

1) Before working, turn the ignition switch to OFF, disconnect the battery ground cable, and wait for 60 seconds or more.

NOTE:
Remove the front and rear bolts from the slide rail of the power seat before removing the battery ground terminal.

2) Tilt the backrest forward and move the seat to the front most position.

CAUTION:
For the power seat, after moving the seat, check that the battery ground has been removed. If not, disconnect the battery ground cable and wait for 60 seconds or more.

3) Release the claws, and then remove the side sill cover-front INN. (On the side where seat belt assembly is removed)

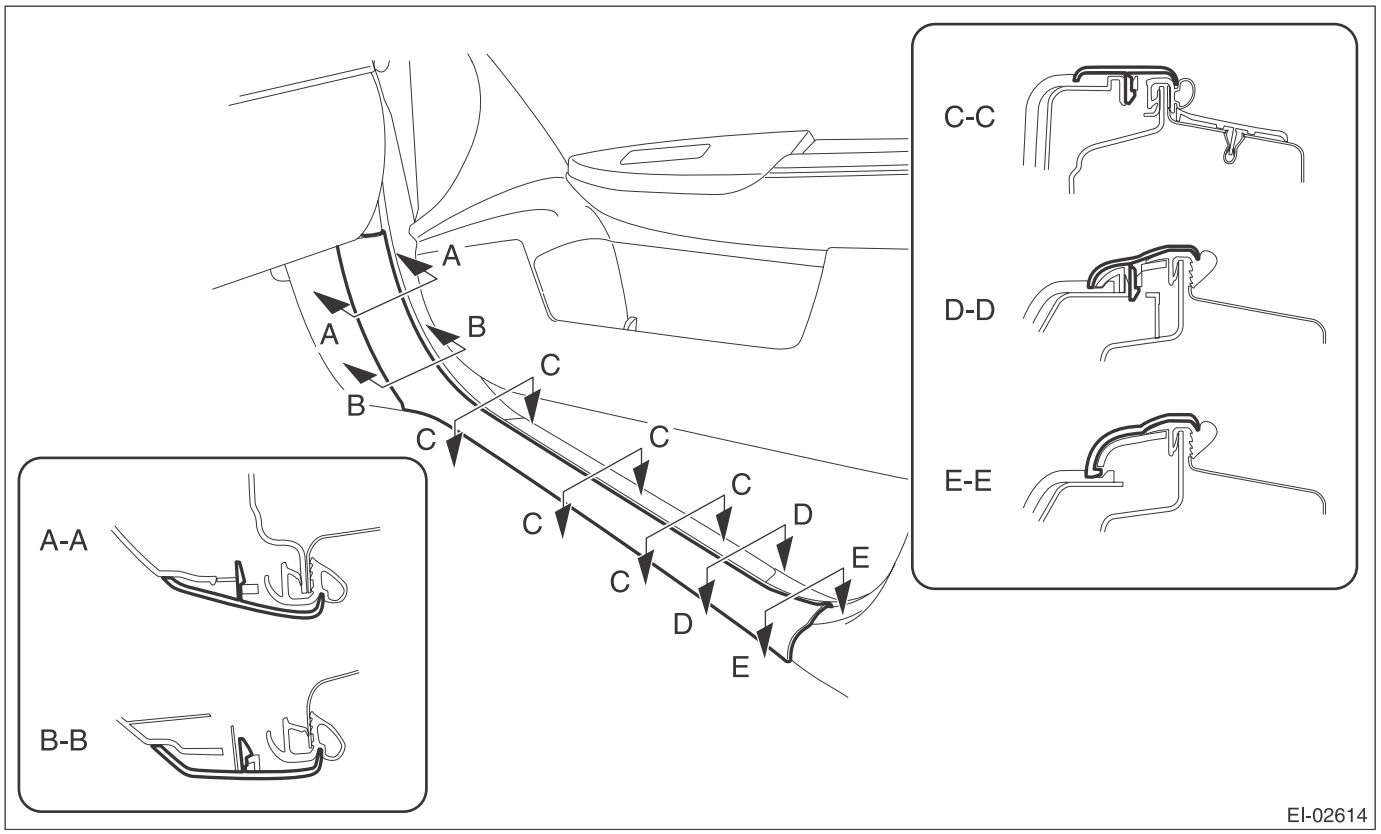

CAUTION:
Do not pull with excessive force. Doing so may damage the claws of the side sill cover INN.

NOTE:
To release the claws of the side sill cover INN, the following steps are recommended.

1. Take out the weather strip from under the side sill cover INN.
2. Turn over the floor mat and release the claw (C) by accessing from behind the side sill cover INN.

4) Release the clips and claws, and then remove the side sill cover - rear INN. (On the side where seat belt assembly is removed)

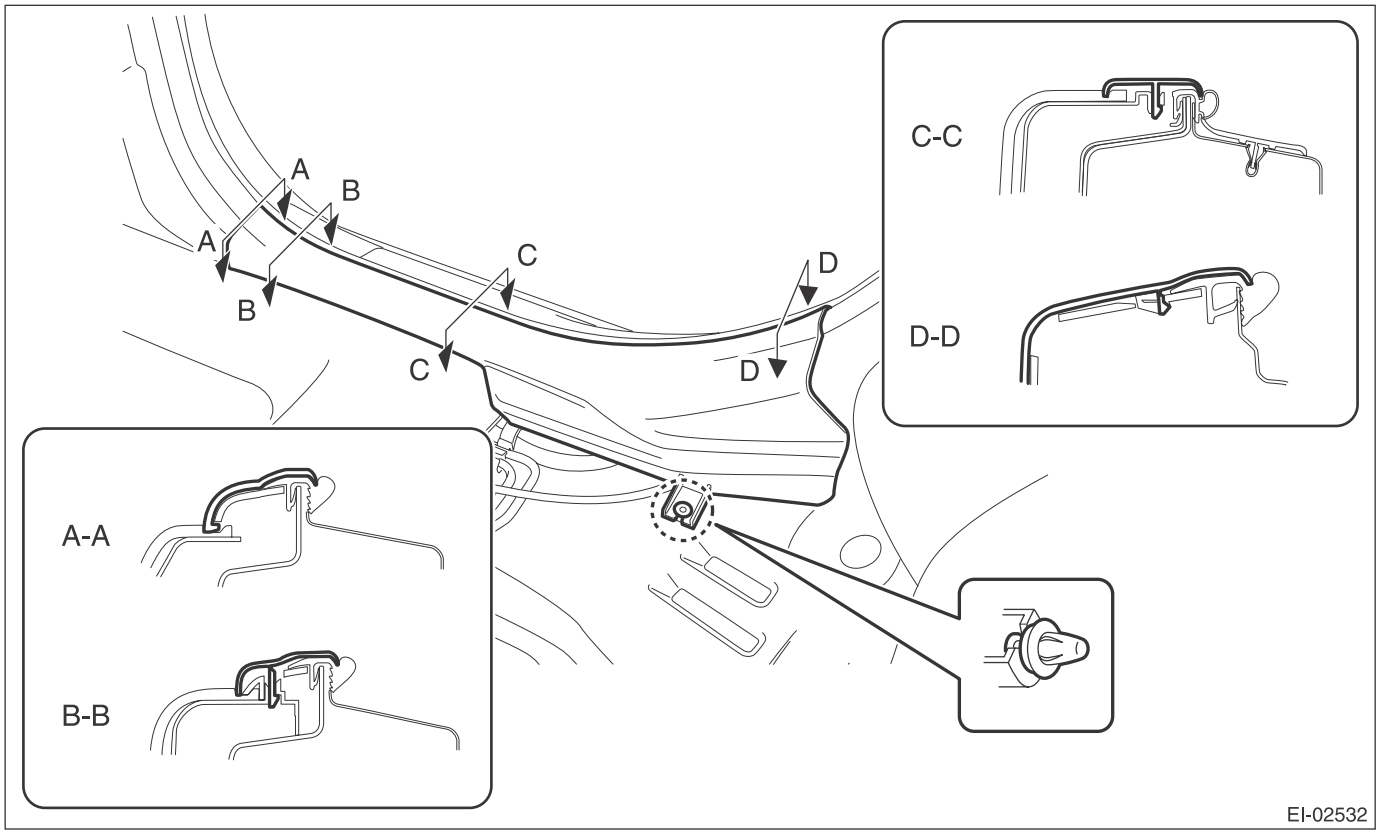

CAUTION:
Do not pull with excessive force. Doing so may damage the claws of the side sill cover INN.

NOTE:
To release the claws of the side sill cover INN, the following steps are recommended.
1. Take out the weather strip from under the side sill cover INN.
2. Turn over the floor mat and release the claws (C) and (D) by accessing from behind the side sill cover INN.

5) Remove the center pillar trim LWR. (On the side where seat belt assembly is removed)
(1) Release the clip by pulling the center pillar trim LWR toward you.
(2) Expand the claws of center pillar trim LWR outward and remove it from the center pillar trim UPR.

CAUTION:
Do not expand the center pillar trim LWR excessively. Doing so may damage the trim.

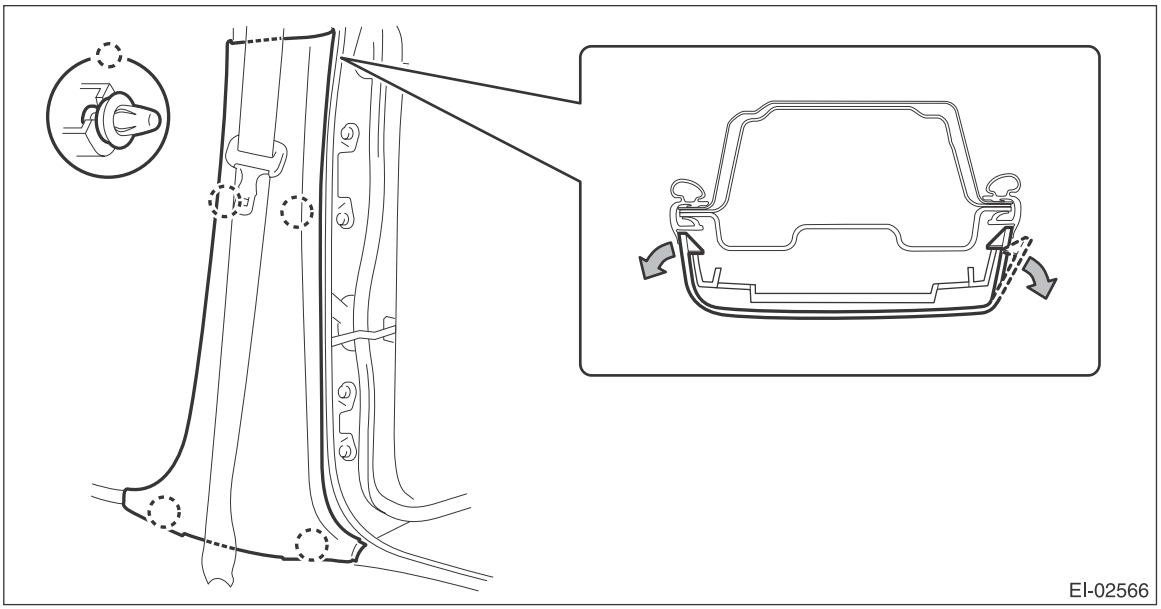
EI-02566

NOTE:
First release the claw located to the rear of the vehicle.

6) Remove the center pillar trim UPR. (On the side where seat belt assembly is removed)
(1) Release the clip by pulling the lower part of the trim toward you.
(2) Remove the clip by pulling the upper part of the trim toward you, and while lowering the entire trim, remove the center pillar trim UPR.

CAUTION:
Do not reuse the upper clips of the center pillar trim UPR. Once the clip is removed, its holding force is reduced. Be sure to replace it with a new clip.

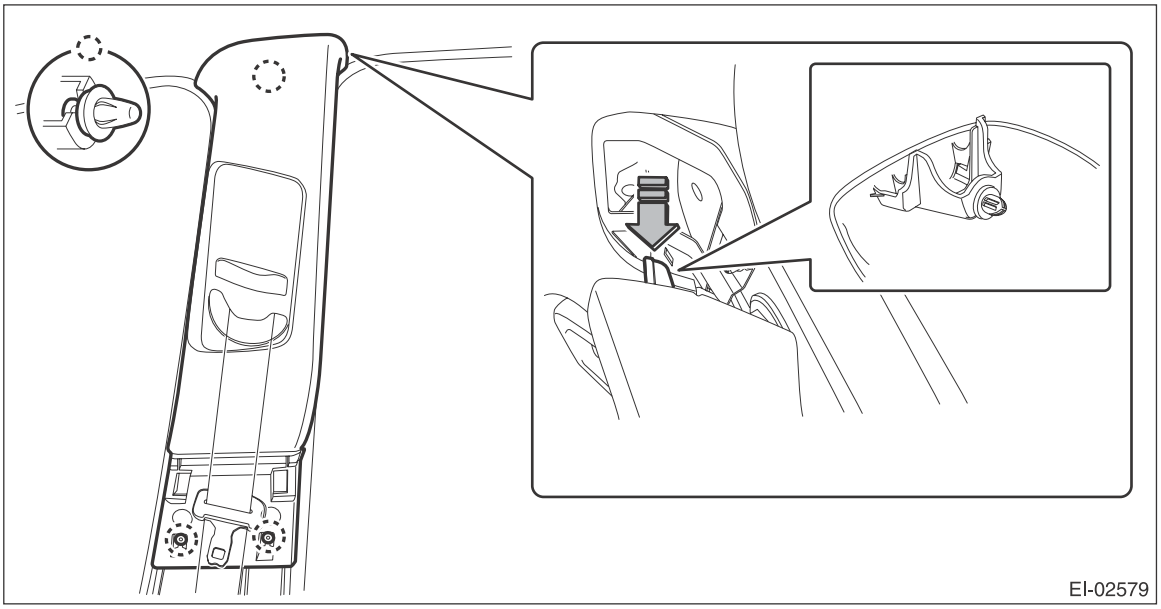
EI-02579

(3) Remove the shoulder anchor bolt.

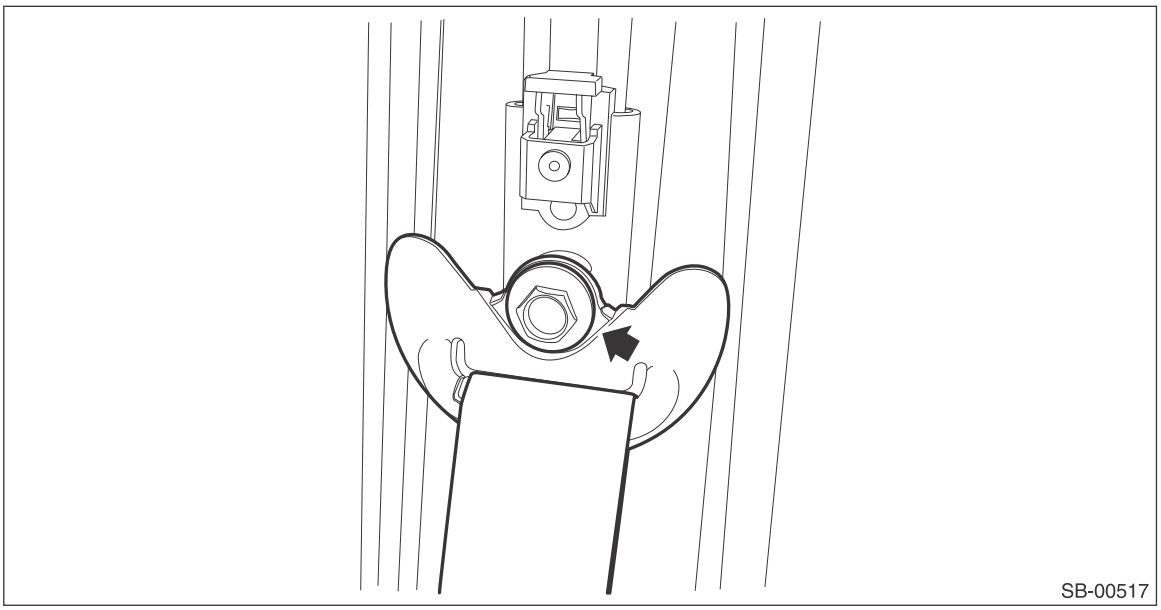

7) Remove the seat belt assembly.
(1) Turn over the floor mat to disconnect the belt tension sensor connector.
(2) Remove the bolt to remove the seat belt retractor and lower anchor bolt.

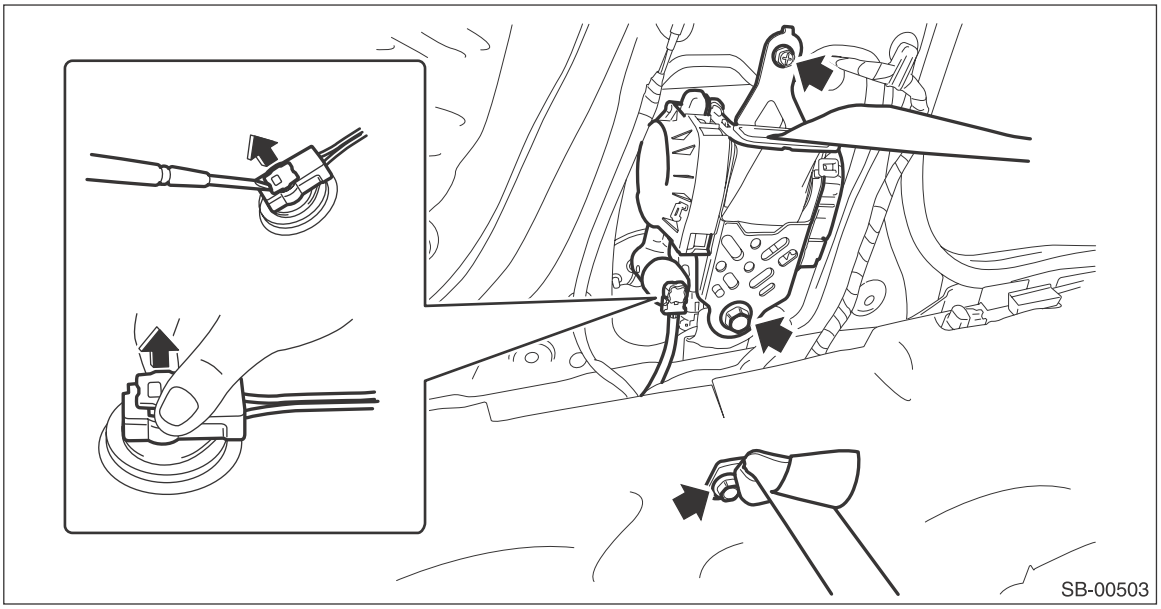

(3) Pull out the seat belt from the center pillar trim UPR.

2. INNER BELT ASSY

CAUTION:
The airbag system is fitted with a backup power supply. After disconnecting the battery ground cable, the airbag may deploy if you do not wait for 60 seconds before starting the service of airbag system.

1) Turn the ignition switch to OFF.
2) Disconnect the ground cable from battery and wait for at least 60 seconds before starting work.

NOTE:
For the power seat, remove the slide rail installing bolt before removing the battery ground terminal.

3) Remove the front seats.
(1) Remove the bolts from the slide rail.
a) Tilt the backrest forward and move the seat to the front most position.

b) Remove the rear bolt cover (A) and remove the two bolts.
c) Move the seat to the rearmost position.
d) Remove the front bolt cover (B) and remove the two bolts.

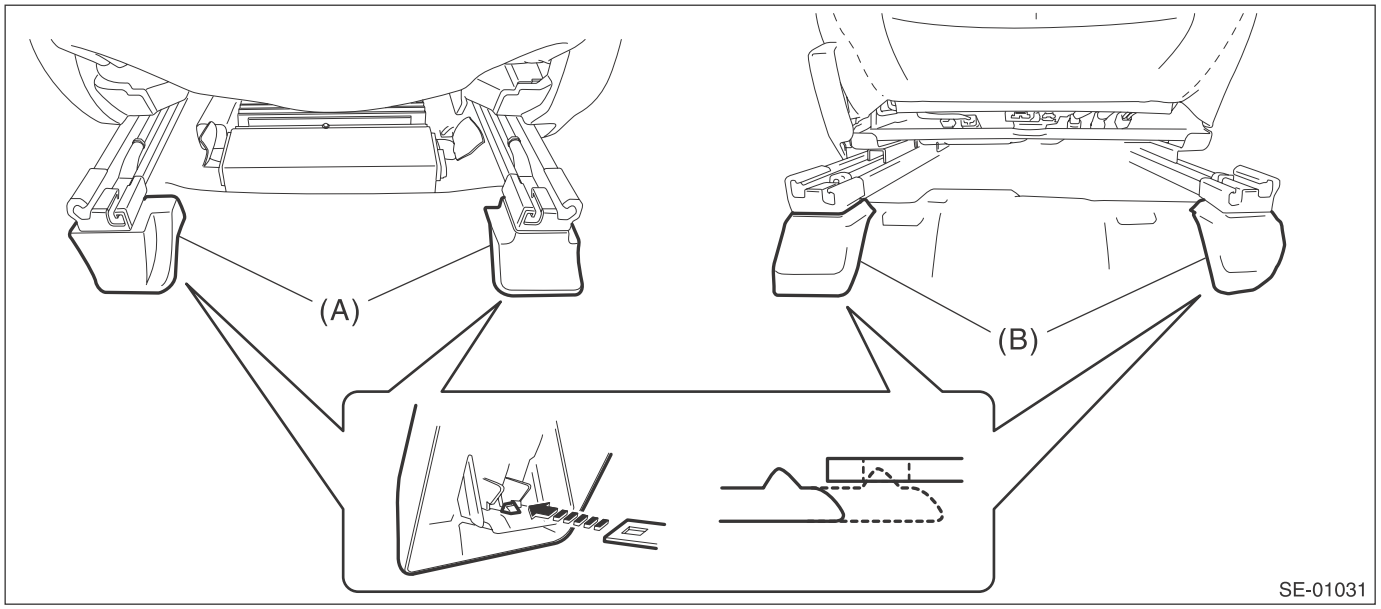

(2) Disconnect the connector under the seat.

CAUTION:
Disconnect the ground cable from battery, and wait 60 seconds before disconnecting the connector.

- Seat belt warning light connector (driver's seat)
- Occupant detection system harness connector (passenger's seat)
- Side airbag connector
- Seat heater connector (model with seat heater)
- Power seat connector (model with power seats)

4) Remove the inner seat belt assembly.
(1) Remove the nut and remove the inner seat belt assembly.
(2) Remove the clip for the inner seat belt harness located under the seat cushion.

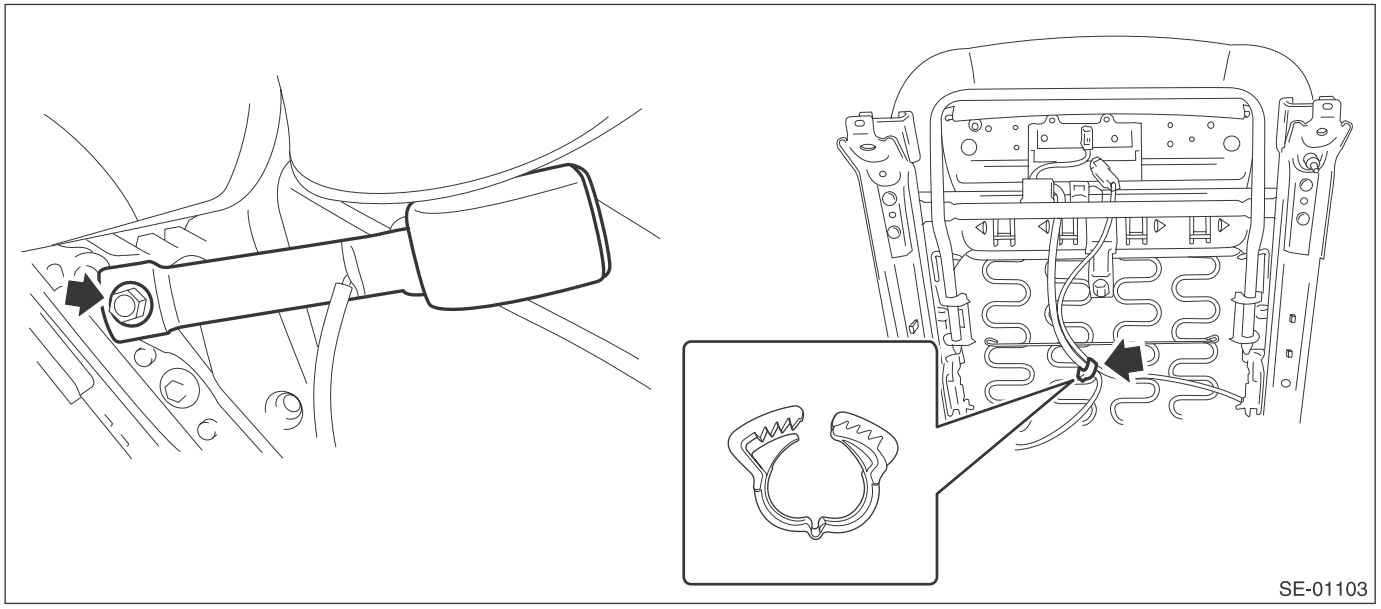

3. ADJUSTABLE ANCHOR ASSY

CAUTION:
• The airbag system is fitted with a backup power supply. After disconnecting the battery ground cable, the airbag may deploy if you do not wait for 60 seconds before starting the service of airbag system.
• Do not drop or subject the pretensioner to any impact.
• Since the pretensioner and bracket are integrated as a unit, do not disassemble them.
1) Before working, turn the ignition switch to OFF, disconnect the battery ground cable, and wait for 60 seconds or more.

NOTE:
For the power seat model, move the seat all the way forward before removing the battery ground terminal.
2) Tilt the backrest forward and move the seat to the front most position.

CAUTION:
For the power seat, after moving the seat, check that the battery ground has been removed. If not, disconnect the battery ground cable and wait for 60 seconds or more.
3) Release the claws, and then remove the side sill cover-front INN. (On the side where seat belt assembly is removed)

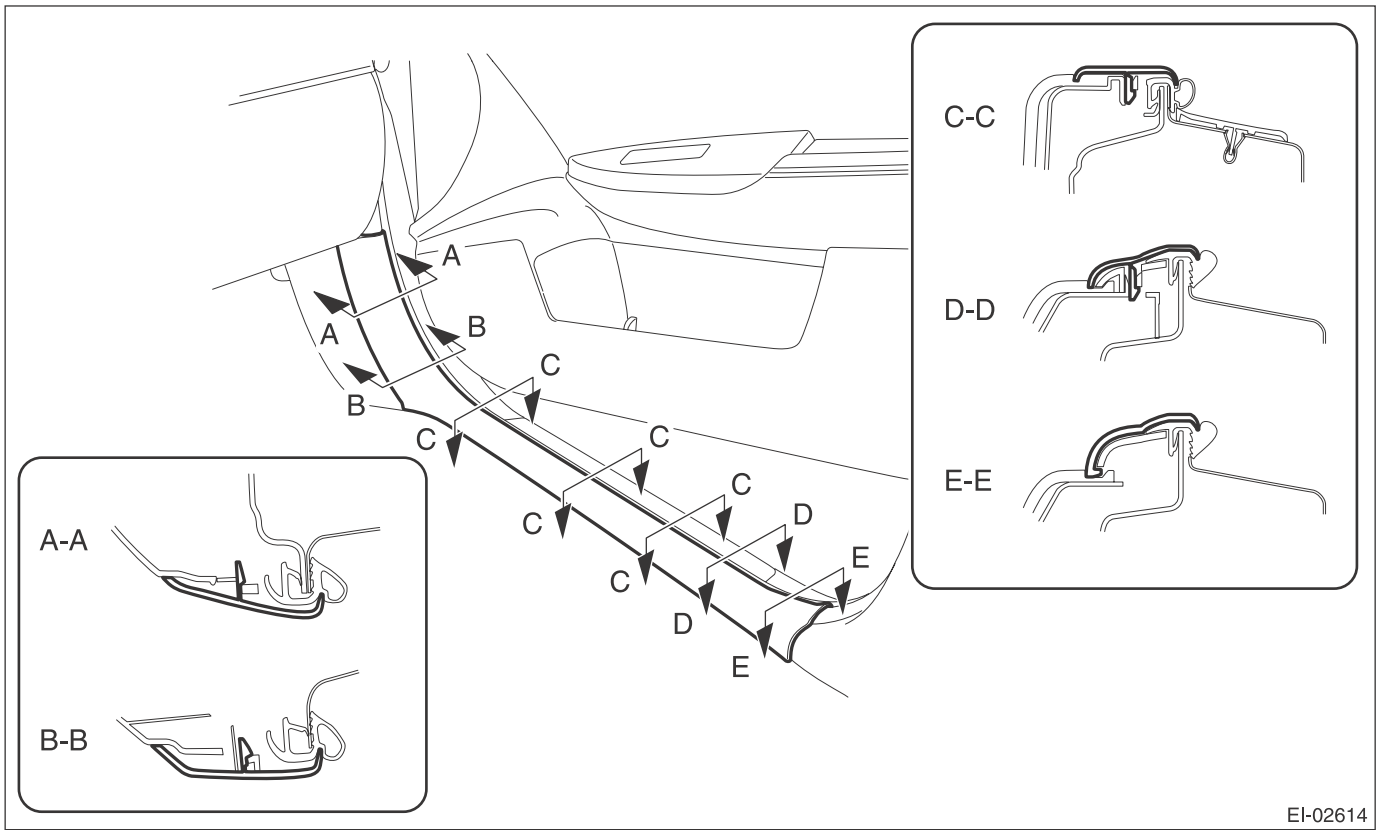

CAUTION:
Do not pull with excessive force. Doing so may damage the claws of the side sill cover INN.

NOTE:
To release the claws of the side sill cover INN, the following steps are recommended.
1. Take out the weather strip from under the side sill cover INN.
2. Turn over the floor mat and release the claw (C) by accessing from behind the side sill cover INN.

4) Release the clips and claws, and then remove the side sill cover - rear INN. (On the side where seat belt assembly is removed)

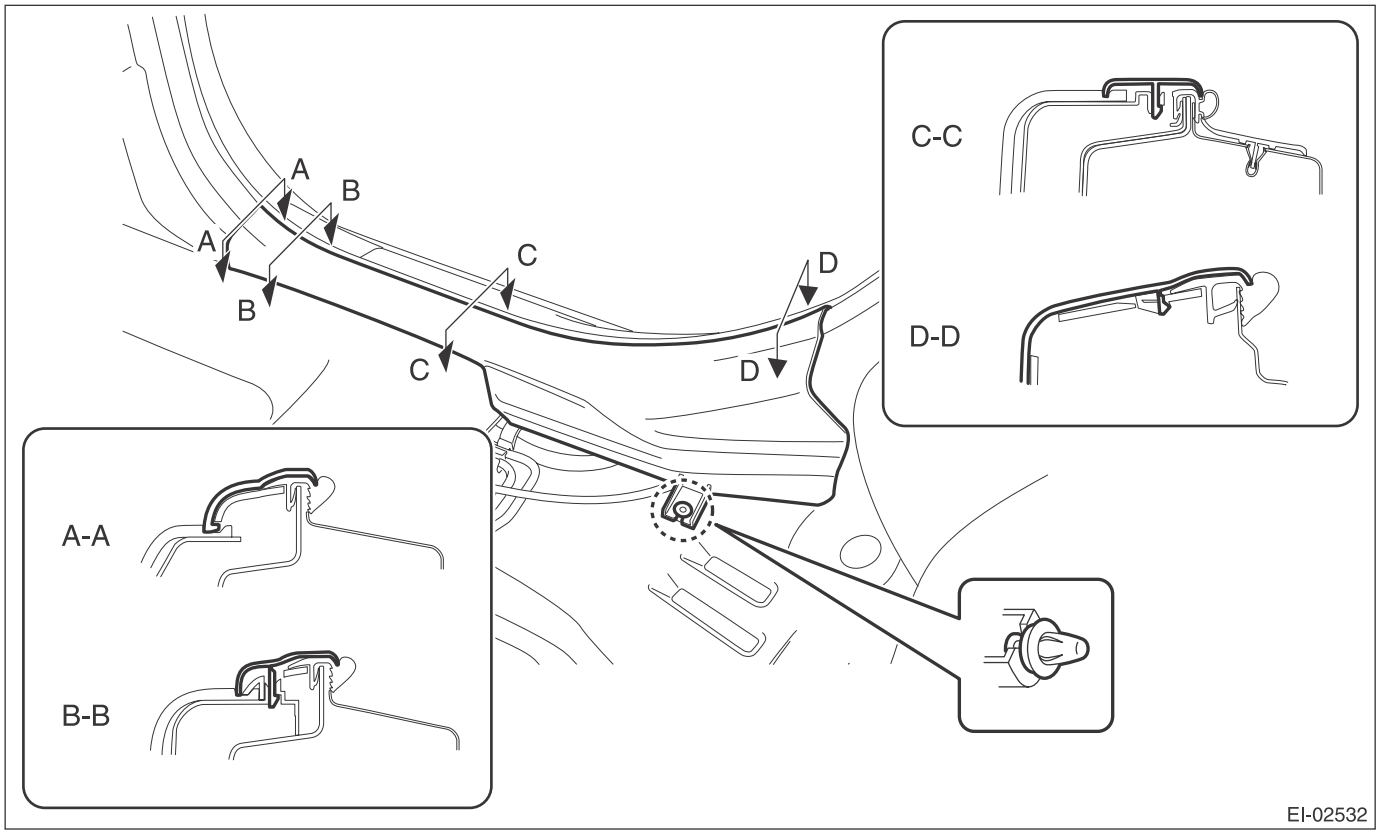

CAUTION:
Do not pull with excessive force. Doing so may damage the claws of the side sill cover INN.

NOTE:
To release the claws of the side sill cover INN, the following steps are recommended.
1. Take out the weather strip from under the side sill cover INN.
2. Turn over the floor mat and release the claws (C) and (D) by accessing from behind the side sill cover INN.

5) Remove the center pillar trim LWR. (On the side where seat belt assembly is removed)
(1) Release the clip by pulling the center pillar trim LWR toward you.
(2) Expand the claws of center pillar trim LWR outward and remove it from the center pillar trim UPR.

CAUTION:
Do not expand the center pillar trim LWR excessively. Doing so may damage the trim.

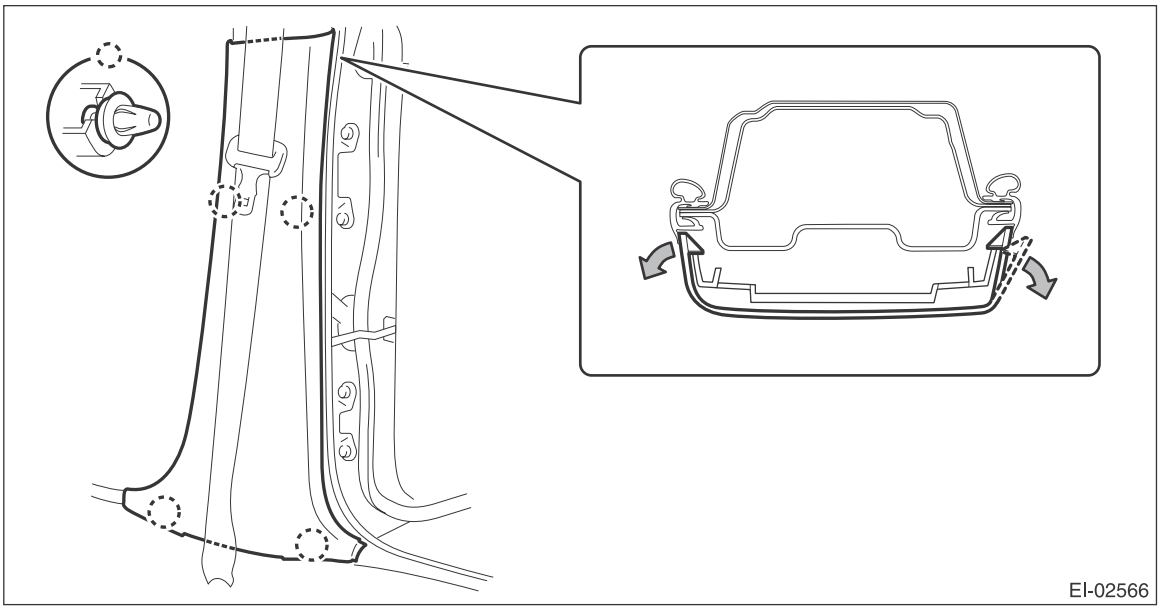
EI-02566

NOTE:
First release the claw located to the rear of the vehicle.

6) Remove the center pillar trim UPR. (On the side where seat belt assembly is removed)
(1) Release the clip by pulling the lower part of the trim toward you.
(2) Remove the clip by pulling the upper part of the trim toward you, and while lowering the entire trim, remove the center pillar trim UPR.

CAUTION:
Do not reuse the upper clips of the center pillar trim UPR. Once the clip is removed, its holding force is reduced. Be sure to replace it with a new clip.

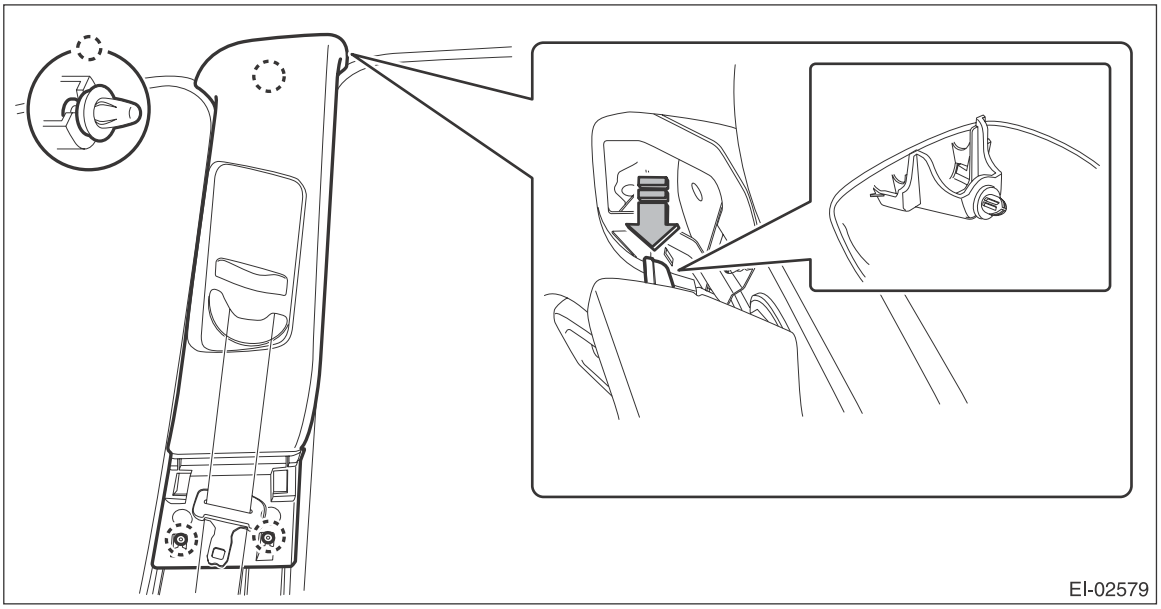
EI-02579

(3) Remove the shoulder anchor bolt.

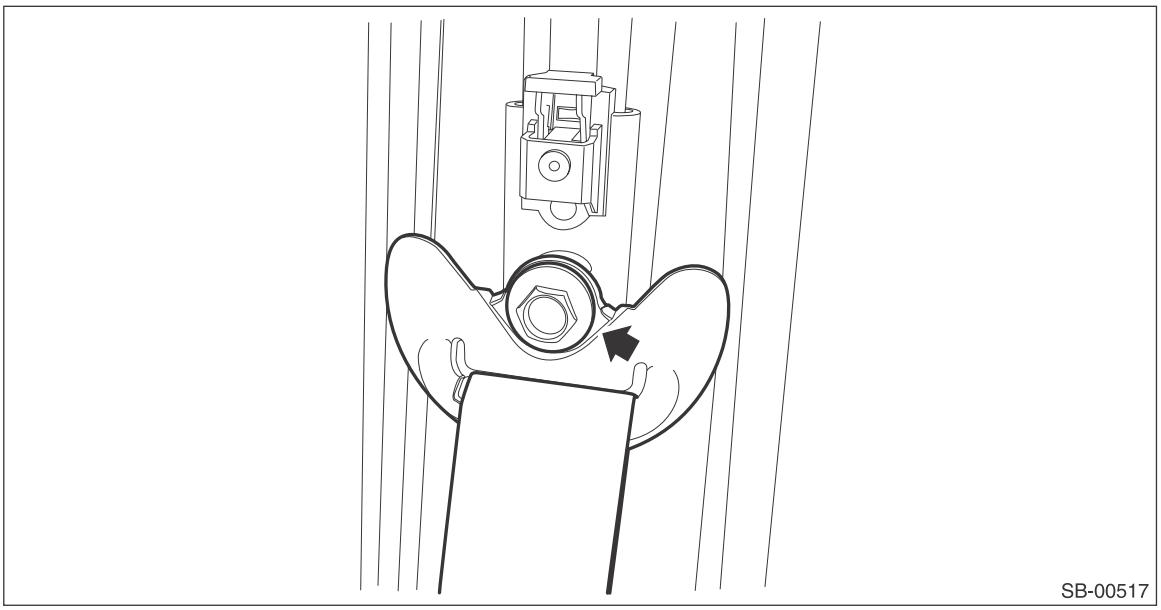

7) Remove the two bolts to remove the adjustable anchor assembly.

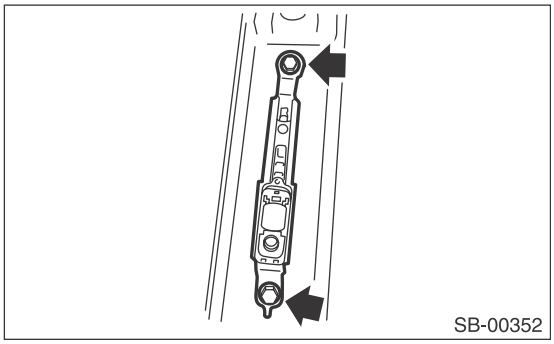

B: INSTALLATION

1. OUTER BELT ASSY

CAUTION:
• The parts of driver's seat and those of passenger's seat are not the same. Before installation, make sure that the correct part is used.
• During installation, make sure that the seat belts are not twisted.
• After installation, make sure that the seat belt can be pulled out and retracted smoothly.
• Make sure that the seat belt harness is not caught. Wrong routing of harnesses may cause short circuits because of getting caught.
• Do not reuse the clips in the upper section of the center pillar trim. Always replace them with new ones.
Once the pillar trim is removed, the clip retention power deteriorates and the center pillar trim may come off.
1) Assemble the center pillar trim LWR to the center pillar trim UPR securely.

CAUTION:
Do not forget to install the seat belt.

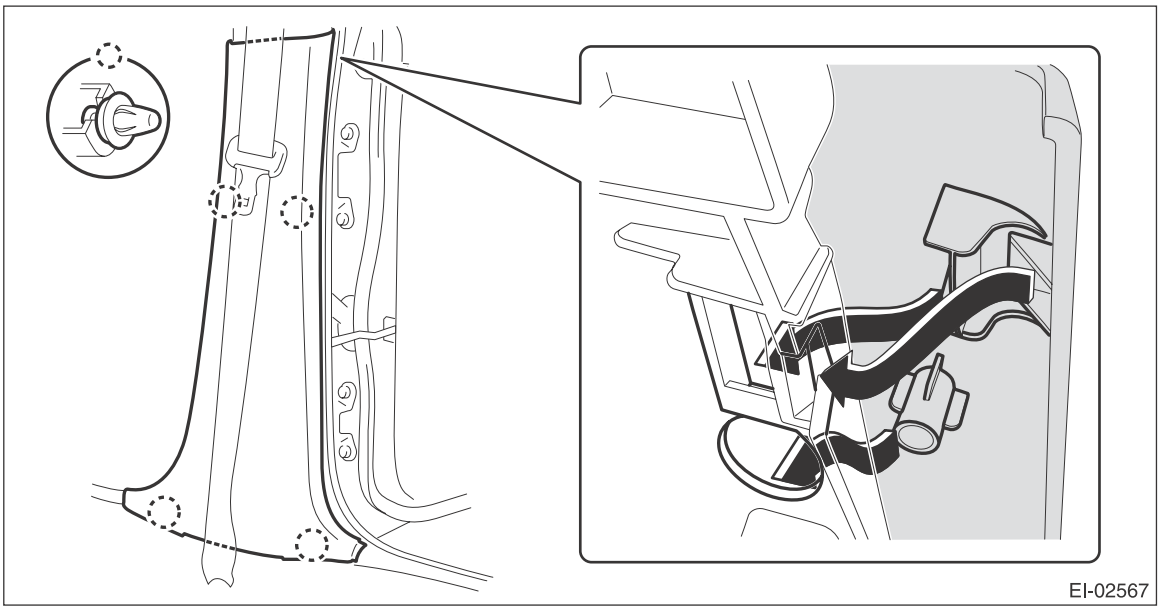

2) Assemble the center pillar trim LWR and center pillar trim UPR to the body.

CAUTION:
Do not reuse the clips in the upper section of the pillar trim. Always replace them with new ones.
(1) Guide the seat belt through the center pillar trim UPR.
(2) Insert the upper claws of the pillar trim.

(3) Attach the pillar trim by fitting the lower clips to the body.

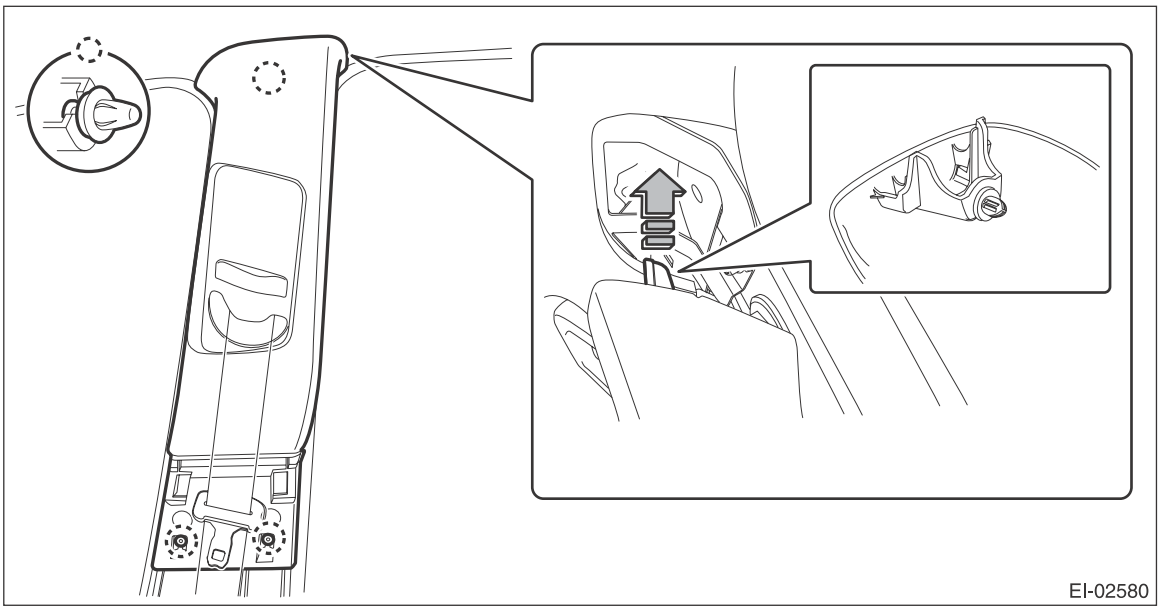

3) Install the remaining parts in the reverse order of removal.

Tightening torque:
Front seat belt: <Ref. to SB-2, FRONT SEAT BELT, COMPONENT, General Description.>

4) After installation, check the following points.
- The seat belt is not twisted.
- The seat belt can be pulled out and retracted smoothly.
- The adjustable anchor can be moved smoothly.
- Check that the airbag warning light lights up for approximately 6 seconds and then turns off when connecting the battery ground cable and turning the ignition switch to ON.

2. INNER BELT ASSY

CAUTION:
- **Before installation, make sure that the correct part is used.**
- **During installation, make sure that the seat belts are not twisted.**
- **Make sure that the seat belt harness is not caught. Wrong routing of harnesses may cause short circuits because of getting caught.**

1) Install the inner belt assembly.

Tightening torque:
Front seat belt: <Ref. to SB-2, FRONT SEAT BELT, COMPONENT, General Description.>

2) Locate the seat belt harness and retain it with a harness clip.

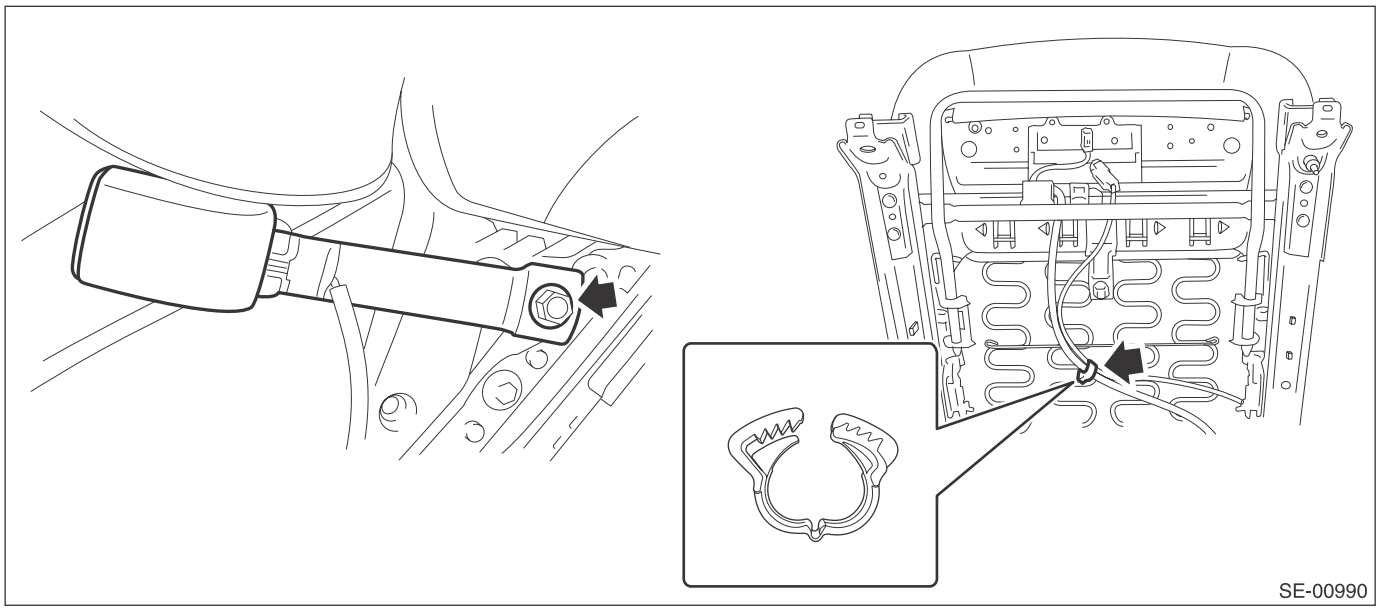

3) Install the seat assembly to the body.

CAUTION:
• The seat mounting bolts differ between the front mounting points and the rear mounting points. Make sure that you are using correct bolts at correct positions.
• Tighten the slide rail installing bolt gradually in several steps to the specified torque in the order as shown in the figure.

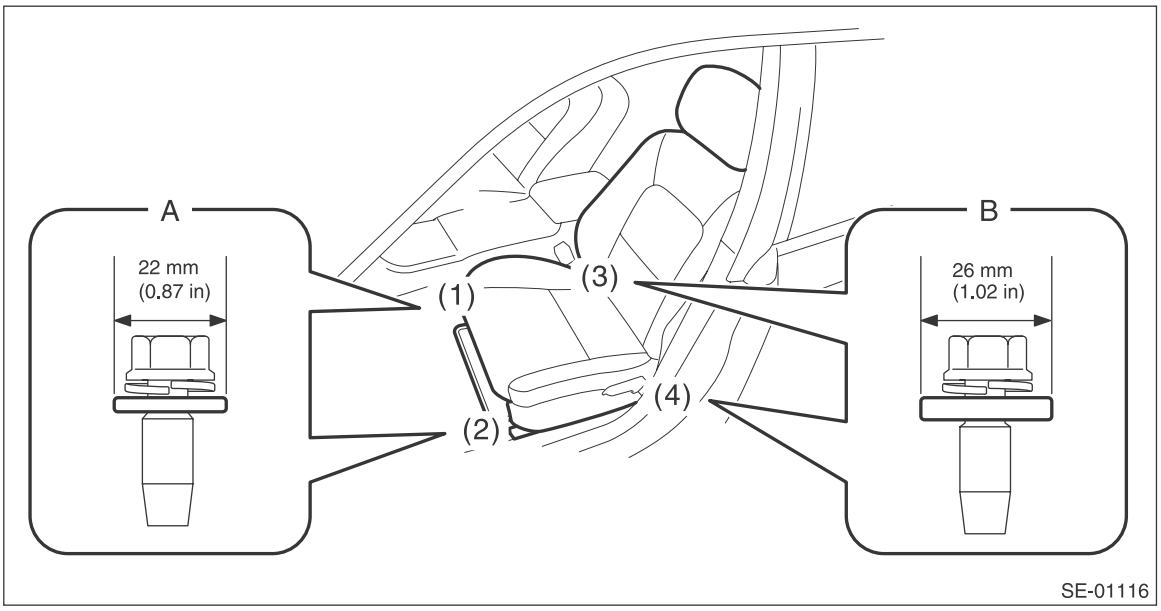

- **Front (bolt A): Washer diameter 22 mm (0.87 in)**
- **Rear (bolt B): Washer diameter 26 mm (1.02 in)**

Tightening torque:
Front seat assembly: 53 N·m (5.4 kgf-m, 39.1 ft-lb)

4) Check that no harness is caught by sliding the seat back and forth.

3. ADJUSTABLE ANCHOR ASSY

Referring to the installation procedure for outer belt ASSY, install the parts in the reverse order of removal.

Tightening torque:
Front seat belt: <Ref. to SB-2, FRONT SEAT BELT, COMPONENT, General Description.>

C: INSPECTION

1. VISUAL INSPECTION

Check for the following, and replace with new parts if necessary.
- Pretensioner is cracked or deformed.
- Adjustable anchor assembly is cracked or deformed.
- Seat belt is slackened, bent or worn.
- Seat belt is abnormally wound or extended.
- Inner belt ASSY is deformed or damaged.
- Seat belt buckle cannot be engaged properly.

2. ELR LOCK MECHANISM INSPECTION

1) Hold the retractor upright (as installed in the vehicle) and check the ELR lock mechanism.
2) Tilt the retractor from the upright posture and check the following points.
- It does not lock if the inclination angle is 12° or less.

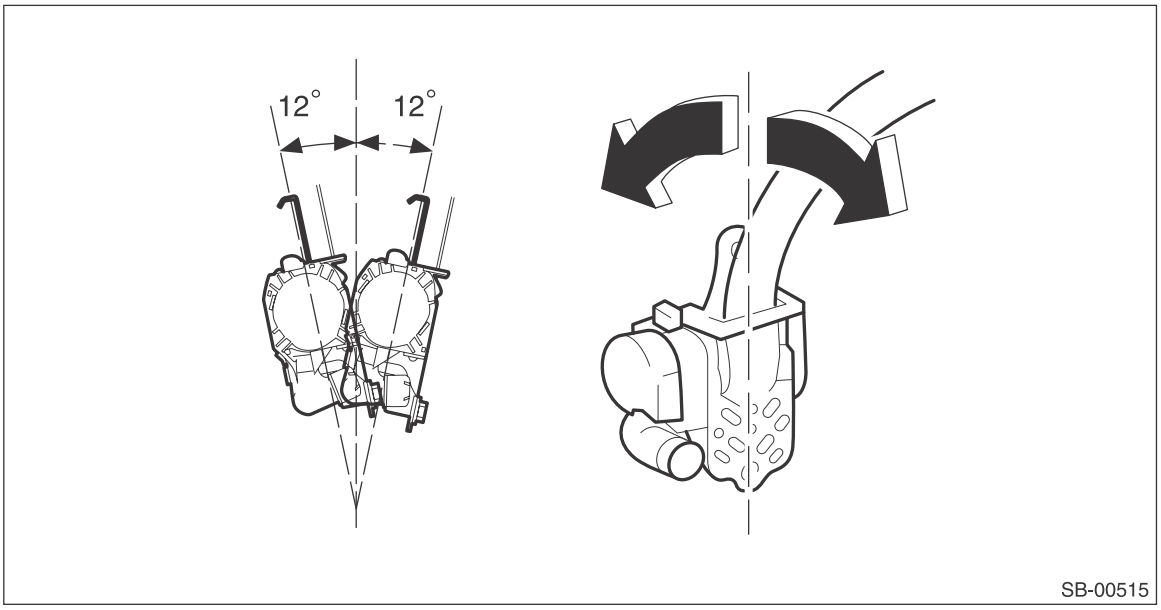

- It remains locked if the inclination angle is 27° or more.

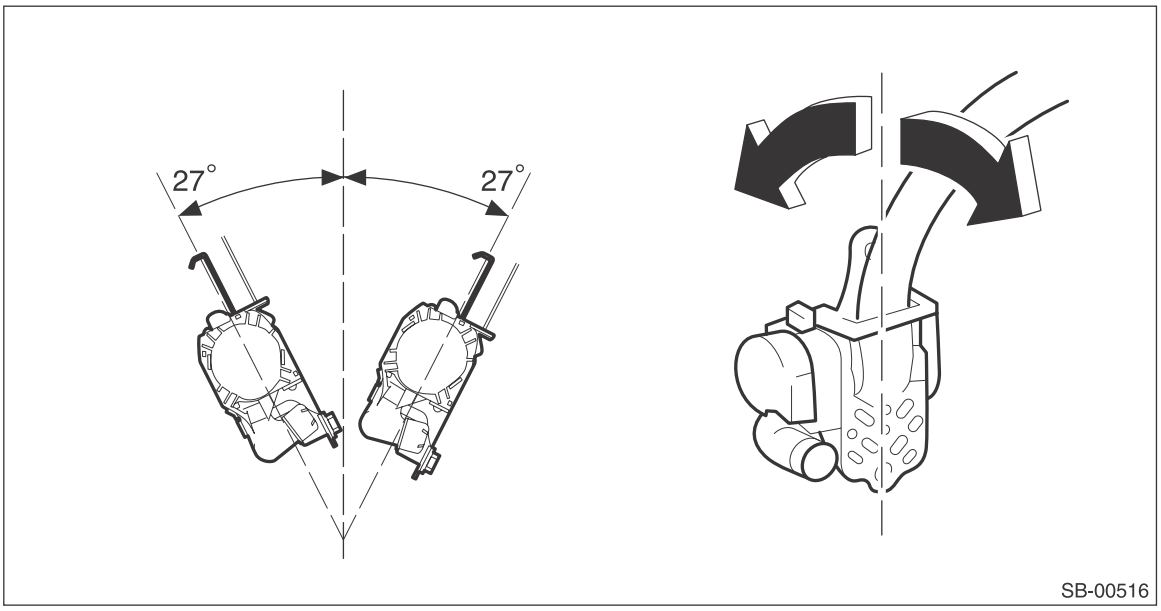

3) If the ELR lock mechanism does not operate correctly, replace the outer belt assembly with a new part.

3. SEAT BELT SWITCH INSPECTION

Preparation tool: Circuit tester

- Driver's side

Check the resistance between the terminals when the inner belt ASSY is in each of the following operation conditions.

Terminal No.	Inspection conditions	Standard	Circuit
1 — 2	Tongue plate inserted	10 kΩ or more	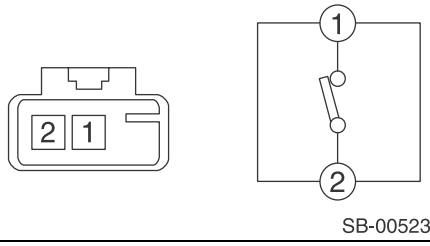 SB-00523
1 — 2	Tongue plate detached	Less than 1 Ω	

Replace the inner belt assembly if the inspection result is not within the standard value.

- Passenger's side

Check the current value between the terminals when the inner belt ASSY is in each of the following operation conditions.

Terminal No.	Inspection conditions	Standard	Circuit
1 — 2	Tongue plate inserted	12 — 18 mA	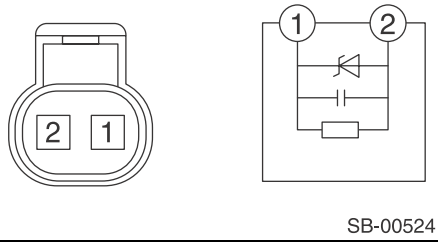 SB-00524
1 — 2	Tongue plate detached	4 — 7 mA	

Replace the inner belt assembly if the inspection result is not within the standard value.

6. Rear Seat Belt

A: REMOVAL

1. OUTER BELT ASSEMBLY RH & LH (SEDAN MODEL)

1) Disconnect the ground cable from battery and wait for at least 60 seconds before starting work.

CAUTION:
The airbag system is fitted with a backup power supply. After disconnecting the battery ground cable, the airbag may deploy if you do not wait for 60 seconds before starting the service of airbag system.

2) Remove the rear seat cushion.
   (1) Pull up the seat cushion and release the hook.

CAUTION:
If the hook is removed from vehicle body, replace the hook with the new part to avoid the deterioration of seat securing.

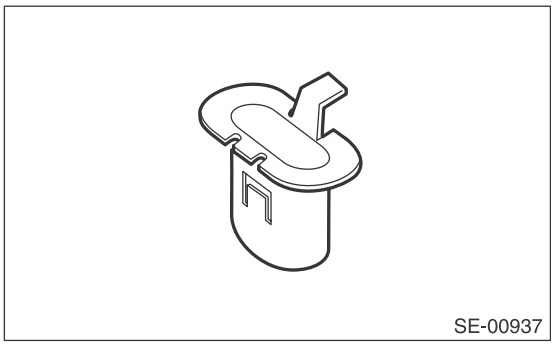
SE-00937

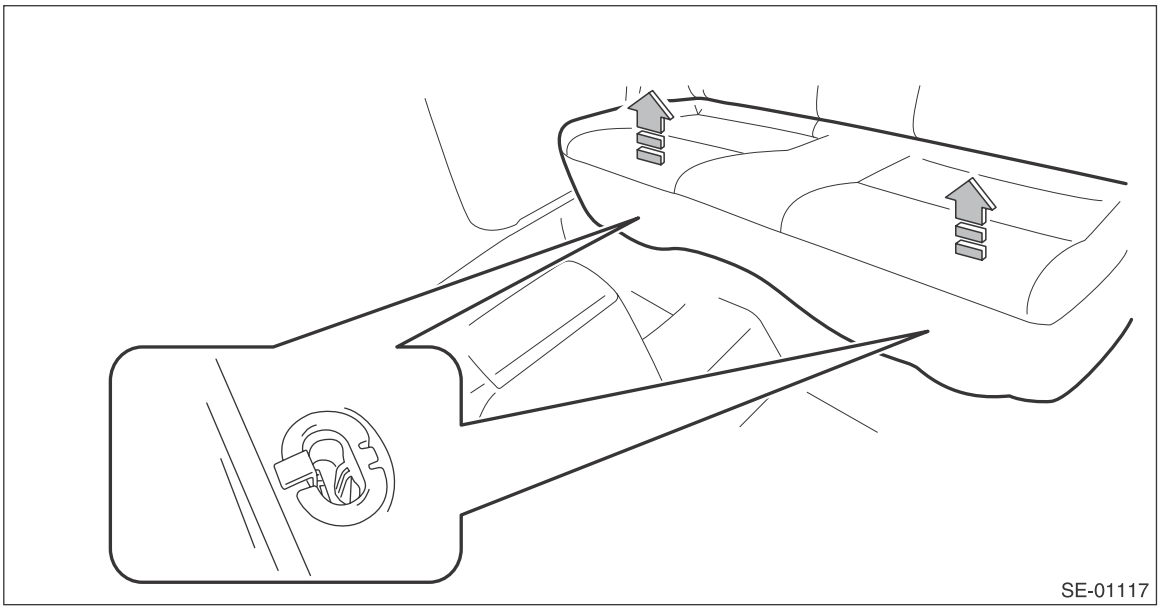
SE-01117

(2) Remove the hook (A) by pushing it back while lifting the front side of the seat cushion, and remove the seat cushion.

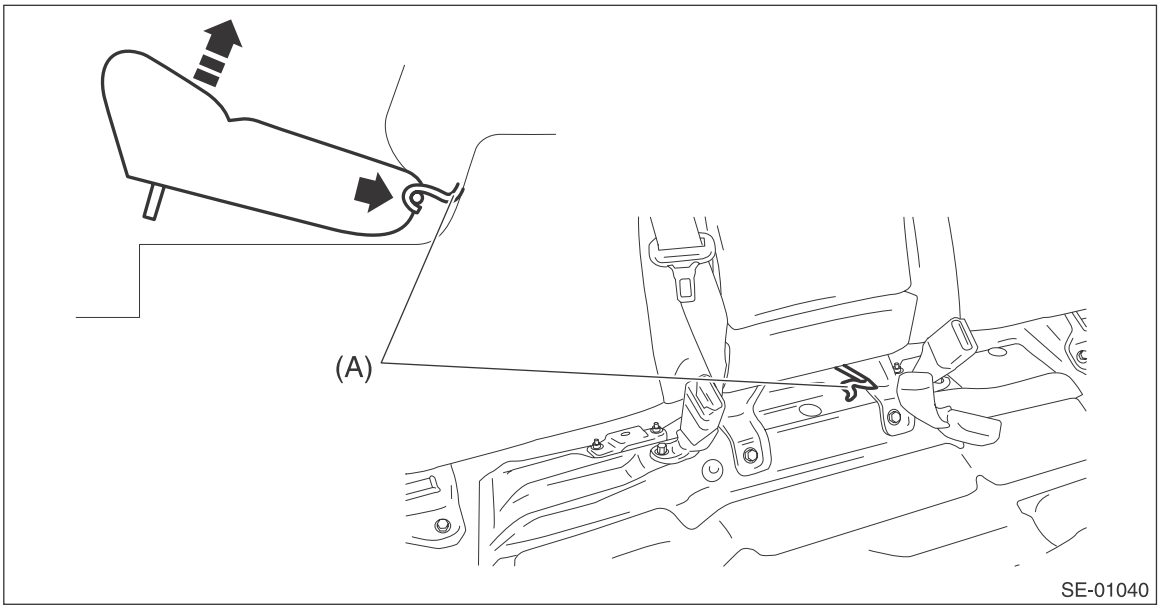

3) Release the clips and claws, and then remove the side sill cover - rear INN. (On the side where seat belt assembly is removed)

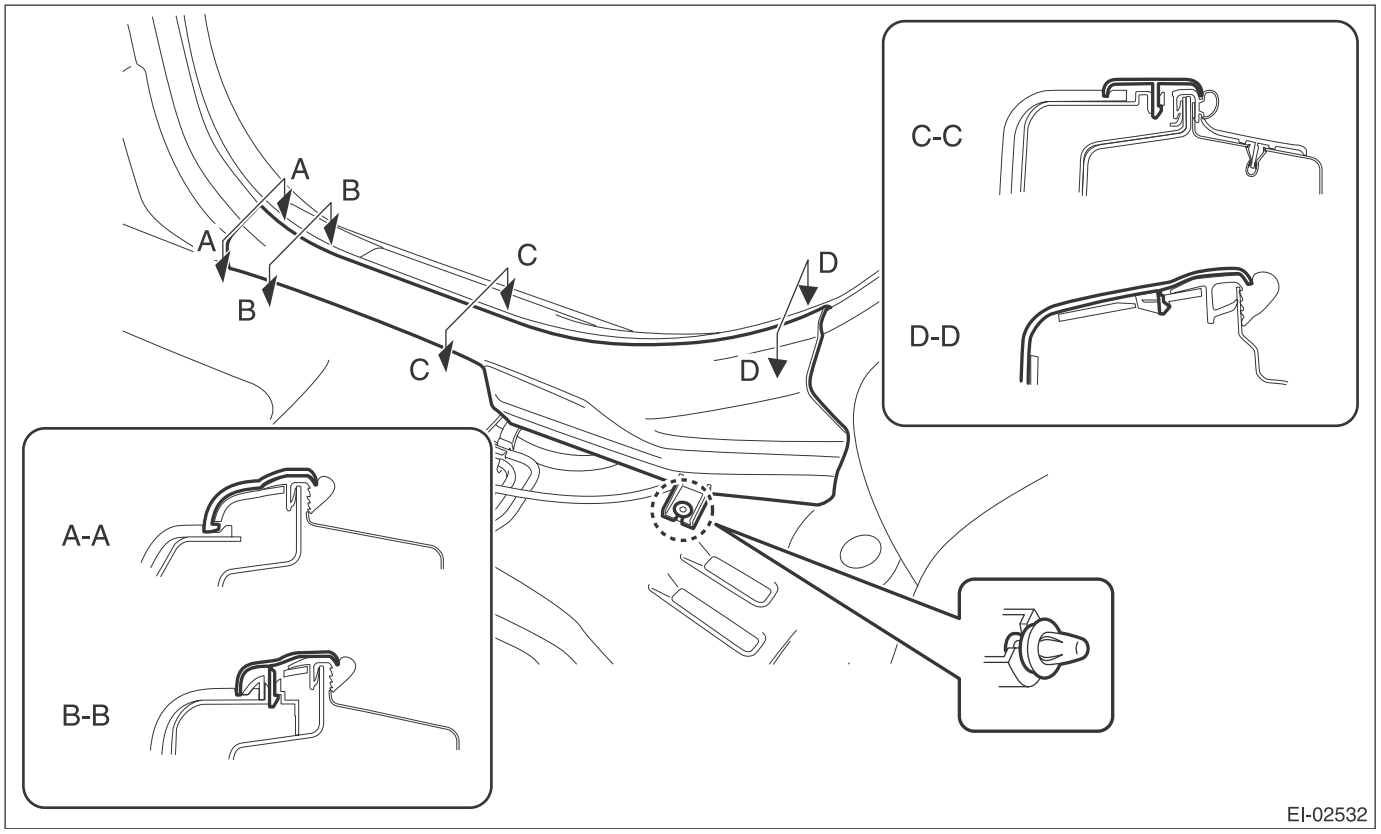

CAUTION:
Do not pull with excessive force. Doing so may damage the claws of the side sill cover INN.

NOTE:
To release the claws of the side sill cover INN, the following steps are recommended.
1. Take out the weather strip from under the side sill cover INN.
2. Turn over the floor mat and release the claws (C) and (D) by accessing from behind the side sill cover INN.

4) Remove the rear quarter trim LWR. (On the side where seat belt assembly is removed)

(1) Remove the backrest side pad assembly.
a) Remove the screws.

Preparation tool: Stubby screwdriver

b) Turn over the bottom end of the backrest side pad in the forward direction so that the claws are released.
c) Remove the backrest side pad by pulling it up.

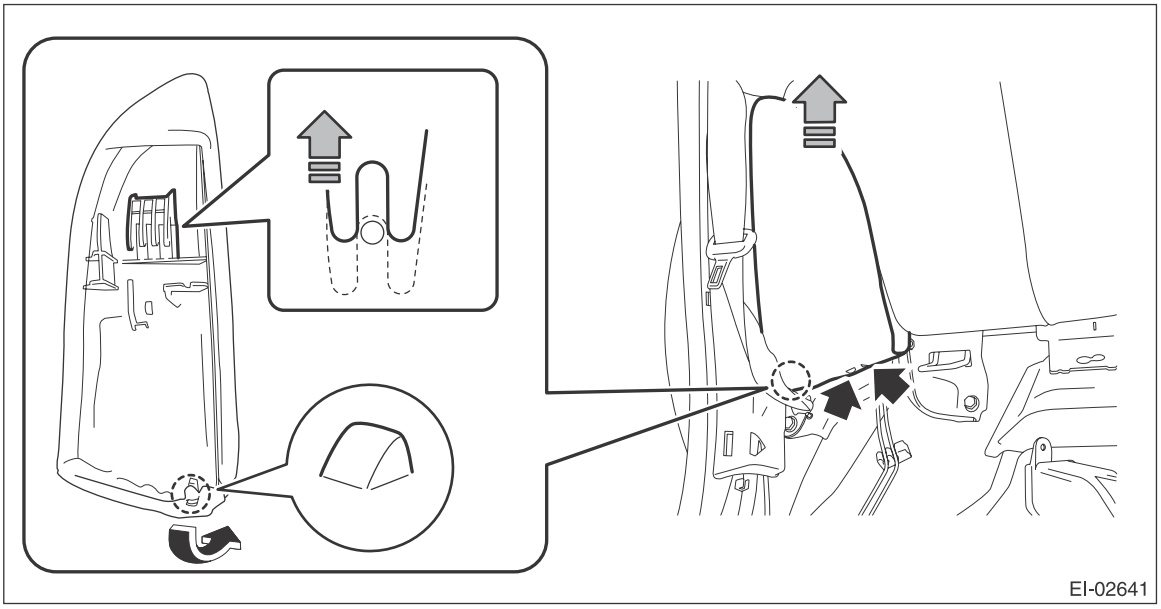

(2) Pull the release lever in the trunk room, and then tilt the backrest forward.

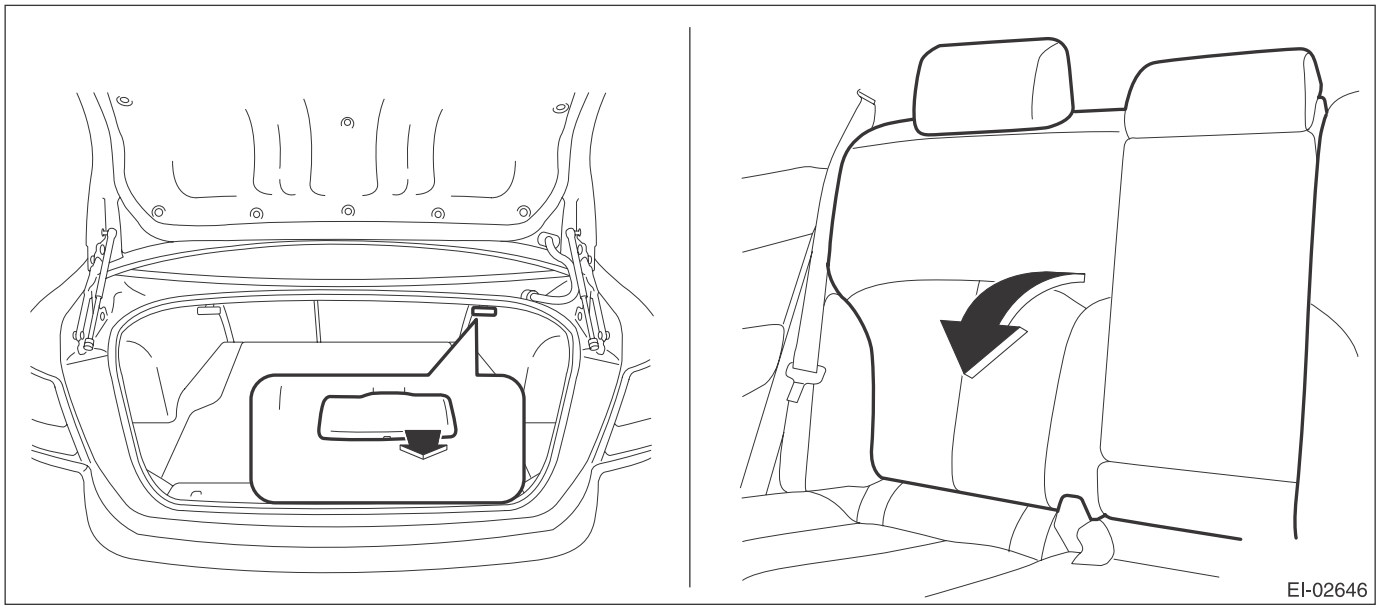

(3) Release the clips of the trunk trim panel assembly-side.

(4) Remove the clips, and remove the rear quarter trim LWR.

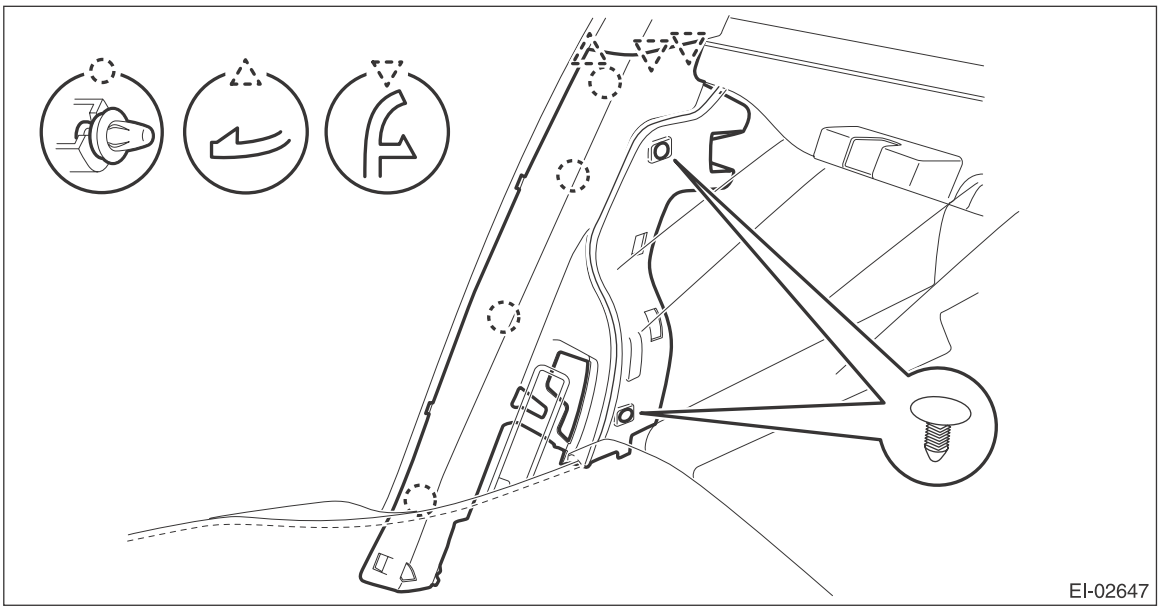

5) Remove the rear quarter trim UPR. (On the side where seat belt assembly is removed)
(1) Remove the lower anchor bolt of the outer belt assembly.

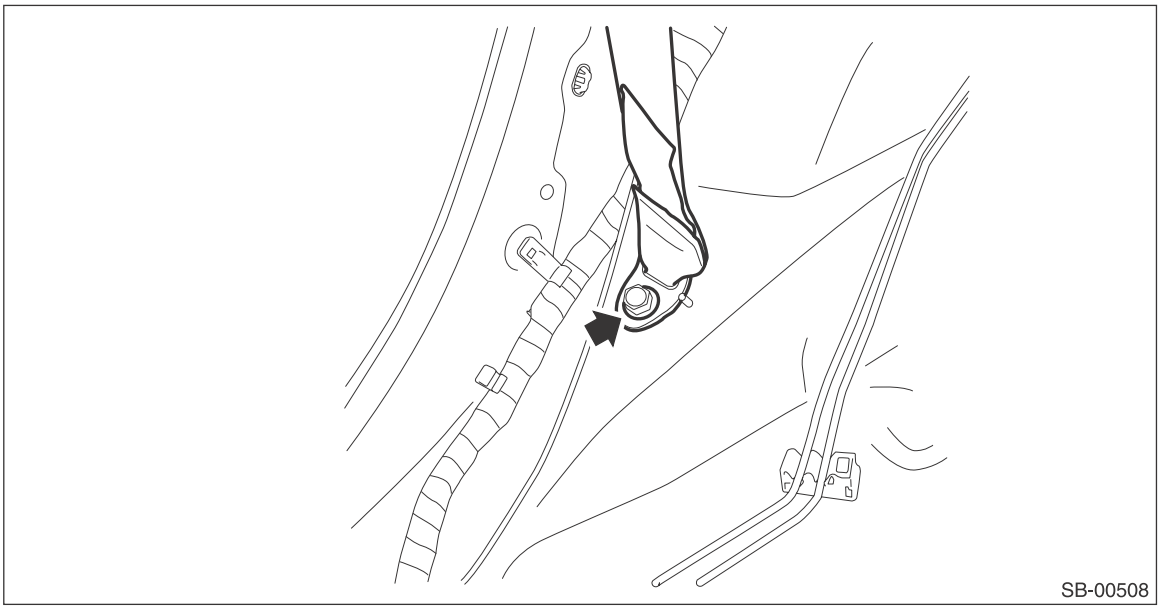

(2) Release the clips, and remove the rear quarter trim UPR.

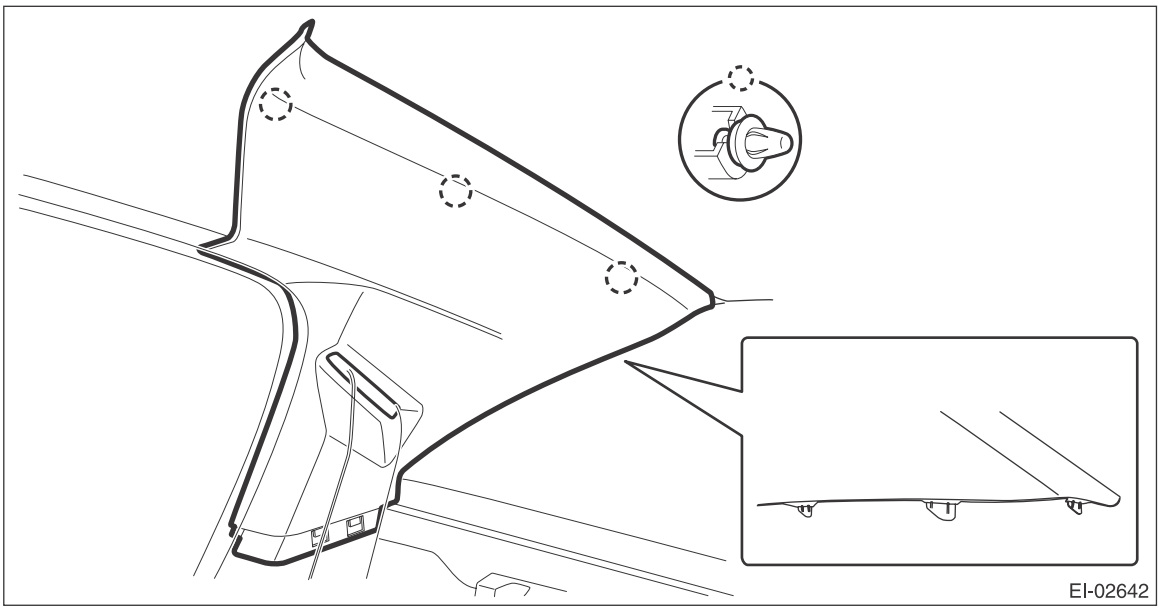

(3) Pull out the seat belt and remove the rear quarter trim UPR.

6) Remove the outer belt assembly.

(1) Remove the bolts and remove the seat belt anchor.

(2) Remove the bolts, and remove the seat belt retractor assembly.

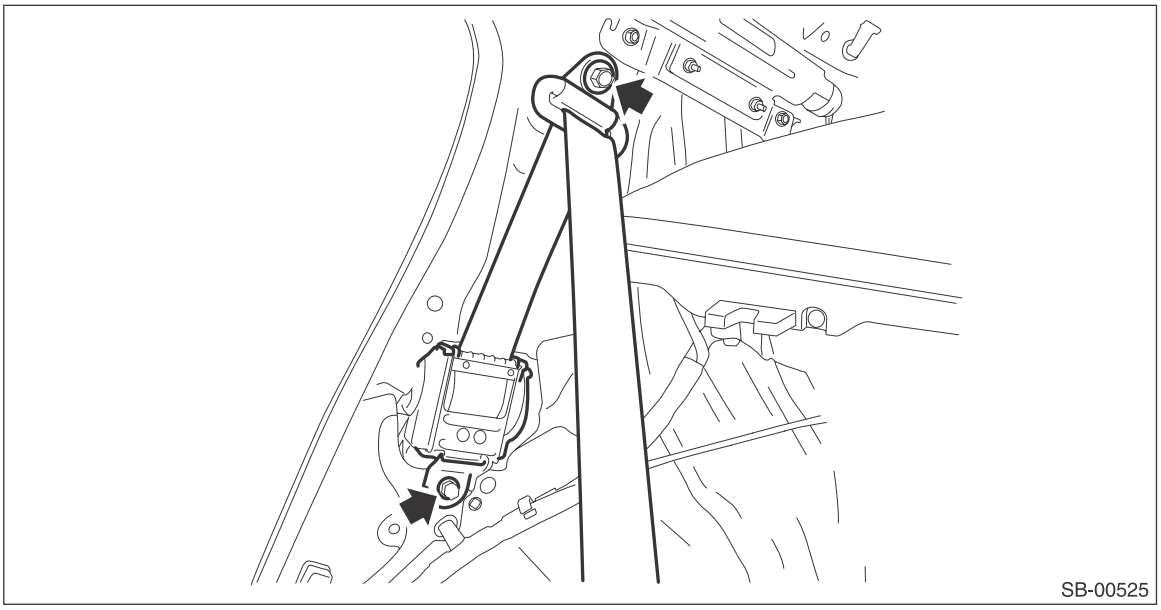

2. OUTER BELT ASSEMBLY RH & LH (OUTBACK MODEL)

1) Disconnect the ground cable from battery and wait for at least 60 seconds before starting work.

CAUTION:
The airbag system is fitted with a backup power supply. After disconnecting the battery ground cable, the airbag may deploy if you do not wait for 60 seconds before starting the service of airbag system.

2) Remove the rear seat cushion.
   (1) Pull up the seat cushion and release the hook.

CAUTION:
If the hook is removed from vehicle body, replace the hook with the new part to avoid the deterioration of seat securing.

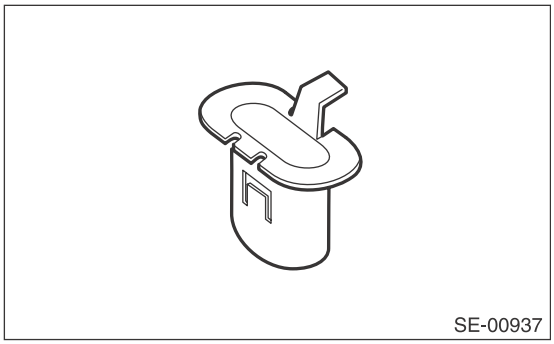
SE-00937

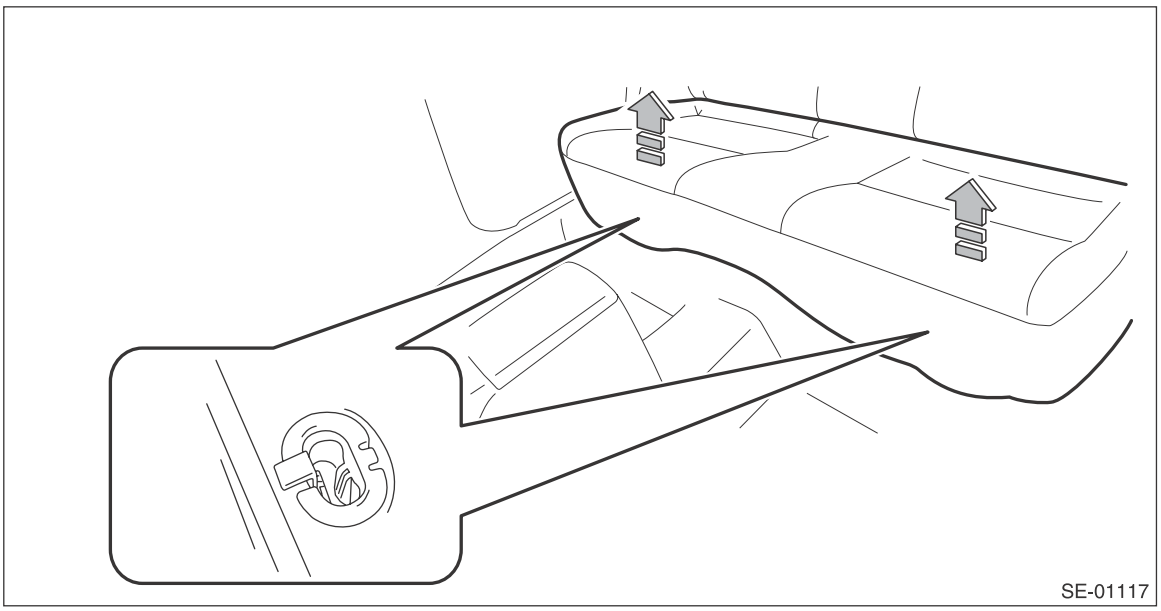
SE-01117

(2) Remove the hook (A) by pushing it back while lifting the front side of the seat cushion, and remove the seat cushion.

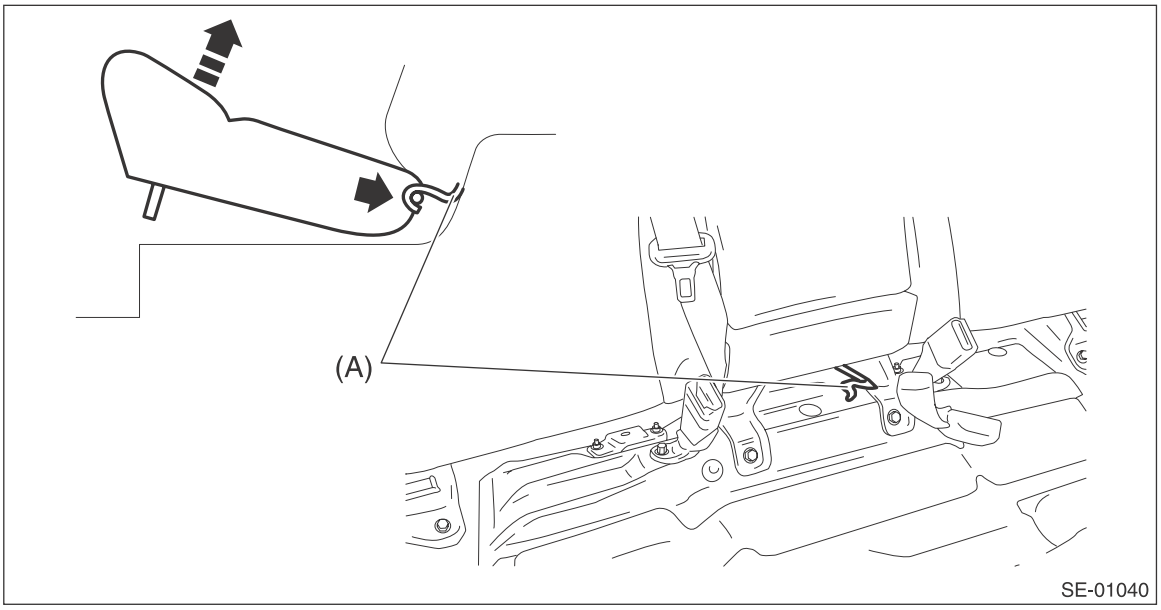

3) Release the clips and claws, and then remove the side sill cover - rear INN. (On the side where seat belt assembly is removed)

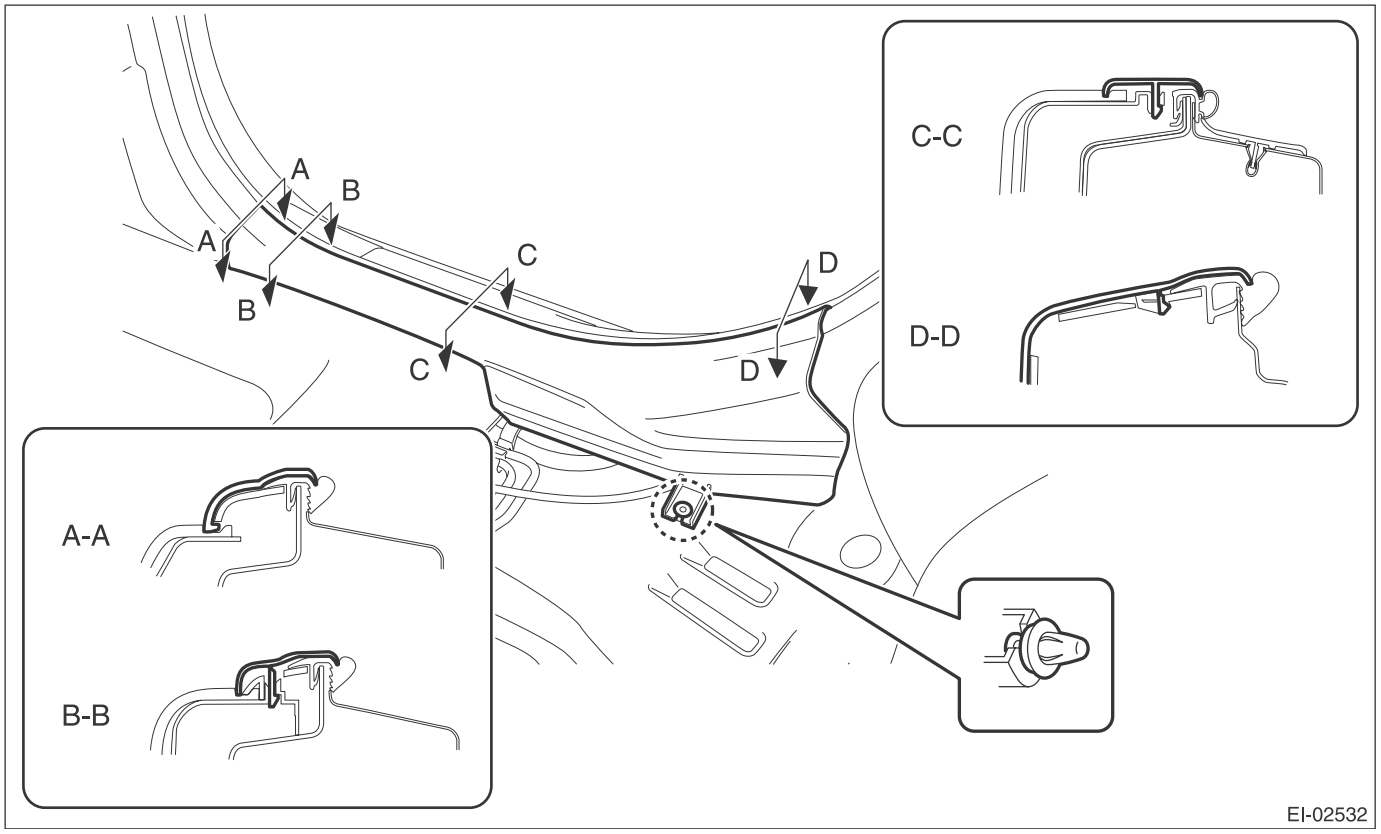

CAUTION:
Do not pull with excessive force. Doing so may damage the claws of the side sill cover INN.

NOTE:
To release the claws of the side sill cover INN, the following steps are recommended.
1. Take out the weather strip from under the side sill cover INN.
2. Turn over the floor mat and release the claws (C) and (D) by accessing from behind the side sill cover INN.

4) Tilt the backrest forward, and then turn over the backrest backside mat.

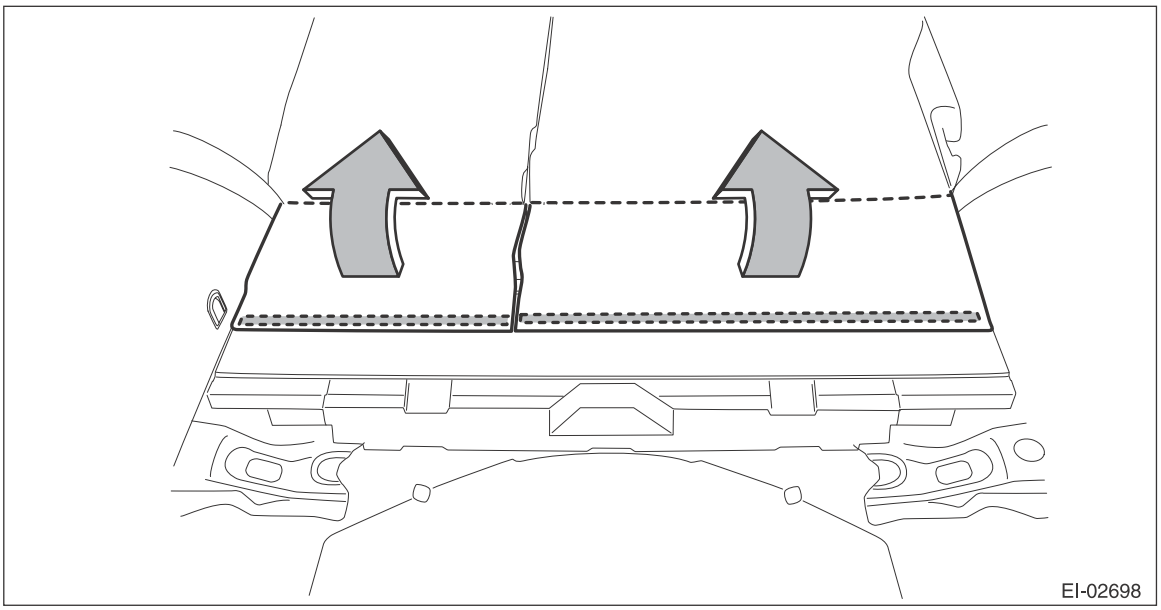

5) Remove the backrest side pad assembly. (On the side where seat belt assembly is removed)
(1) Disconnect the backrest cable and reclining lever cable.
(2) Remove the screws and remove the reclining lever assembly by pulling it downward.

Preparation tool: Stubby screwdriver

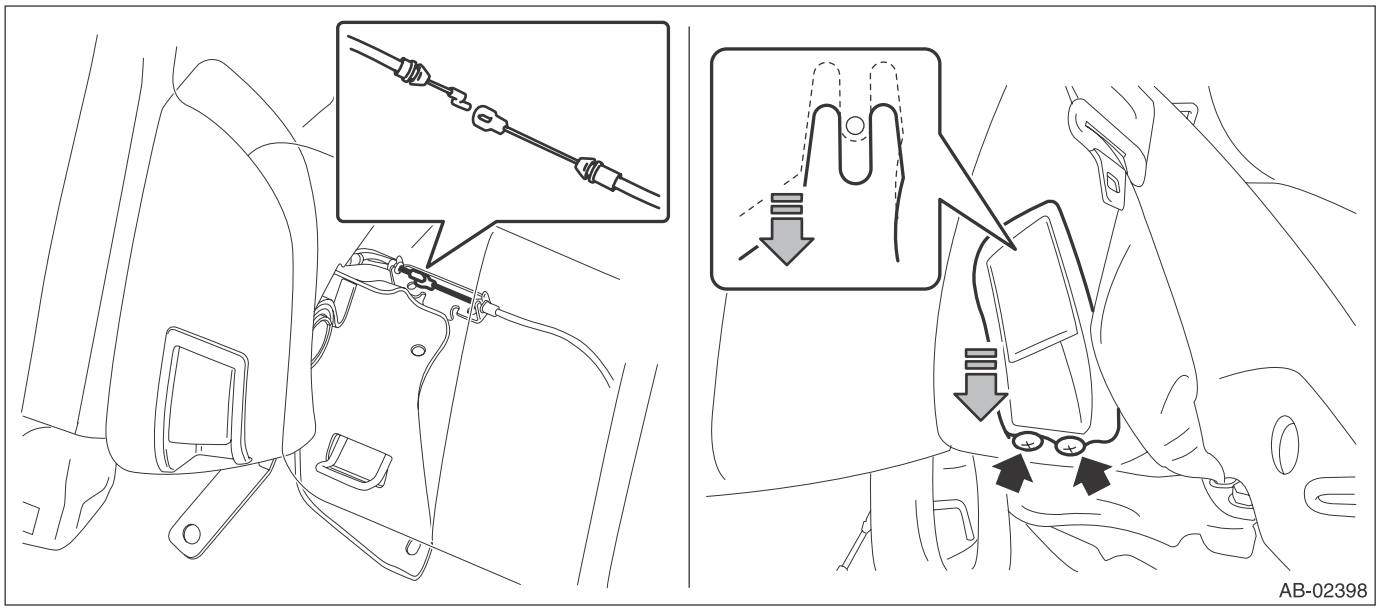

(3) Turn over the bottom end of the backrest side pad in the forward direction so that the claws are released.

(4) Remove the backrest side pad by pulling it up.

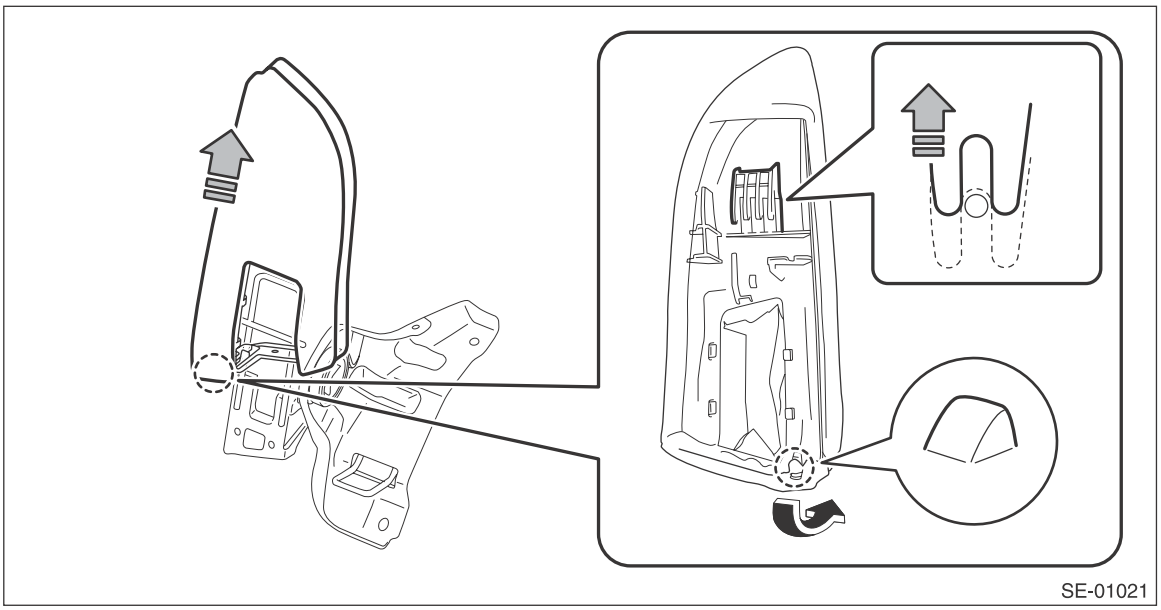

6) Remove the clips, and remove the luggage floor box and rear floor edge cover.

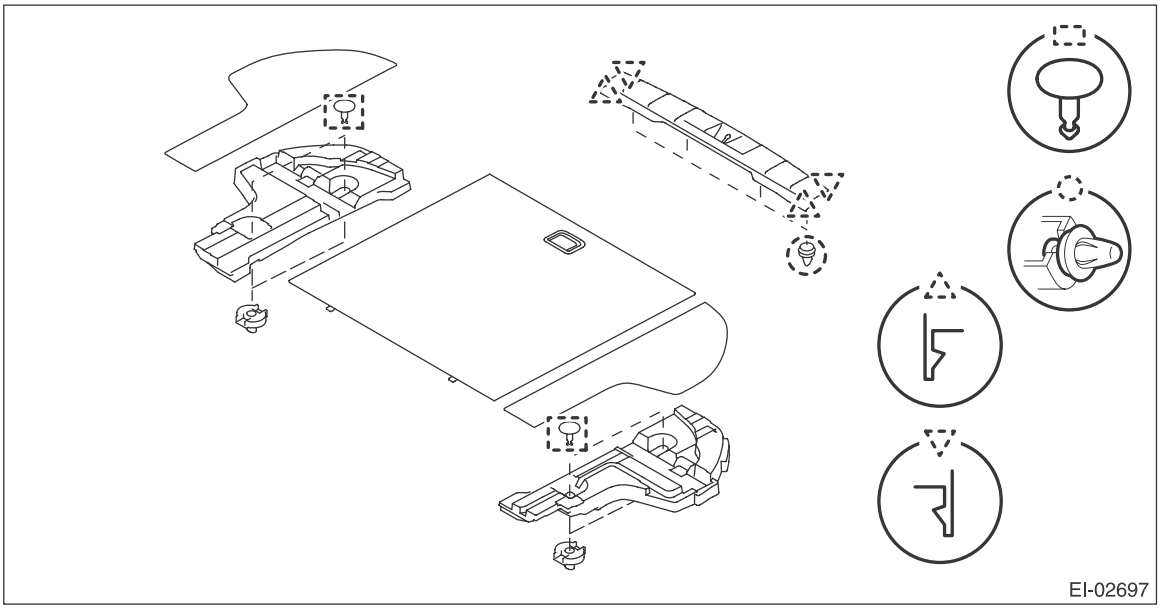

7) Remove the rear quarter trim LWR. (On the side where seat belt assembly is removed)
(1) Remove the caps, screws, and bolts. (A), (C)
(2) Take out the hook and remove the screw inside. (B)

(3) Remove the clips, and remove the rear quarter trim LWR.

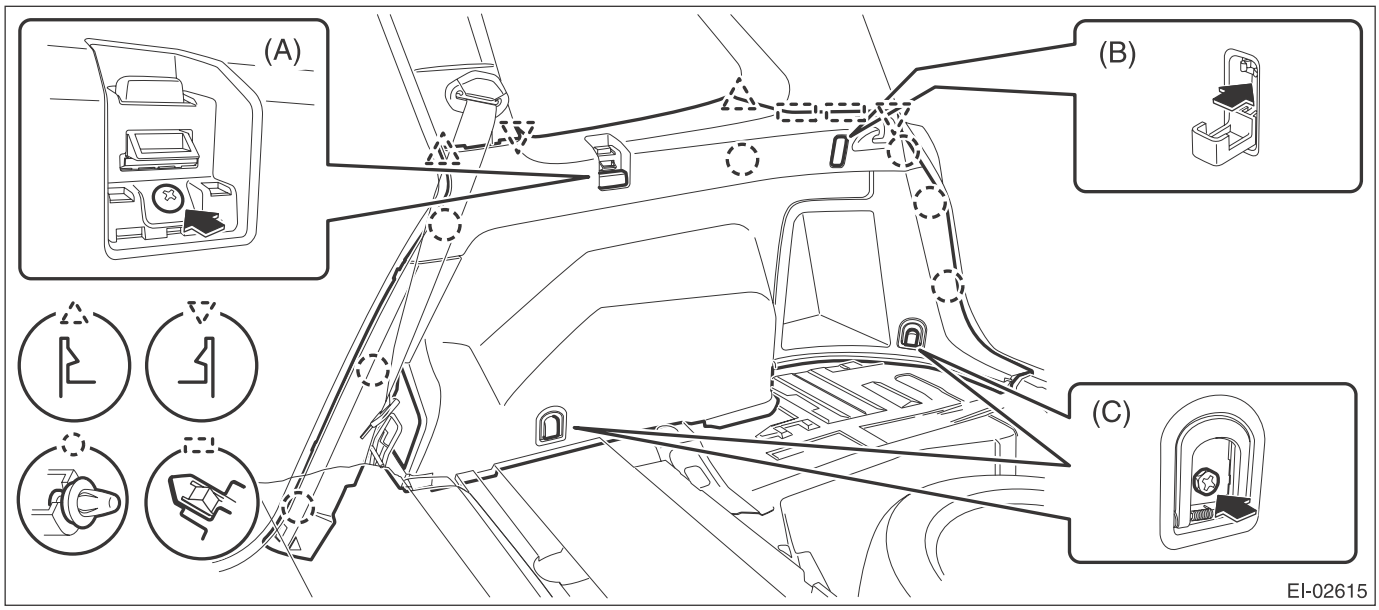

8) Remove the outer belt assembly.
(1) Remove the seat belt lower anchor bolt.
(2) Open the cap and remove the bolt to remove the seat belt anchor.
(3) Remove the bolts, and remove the seat belt retractor assembly.

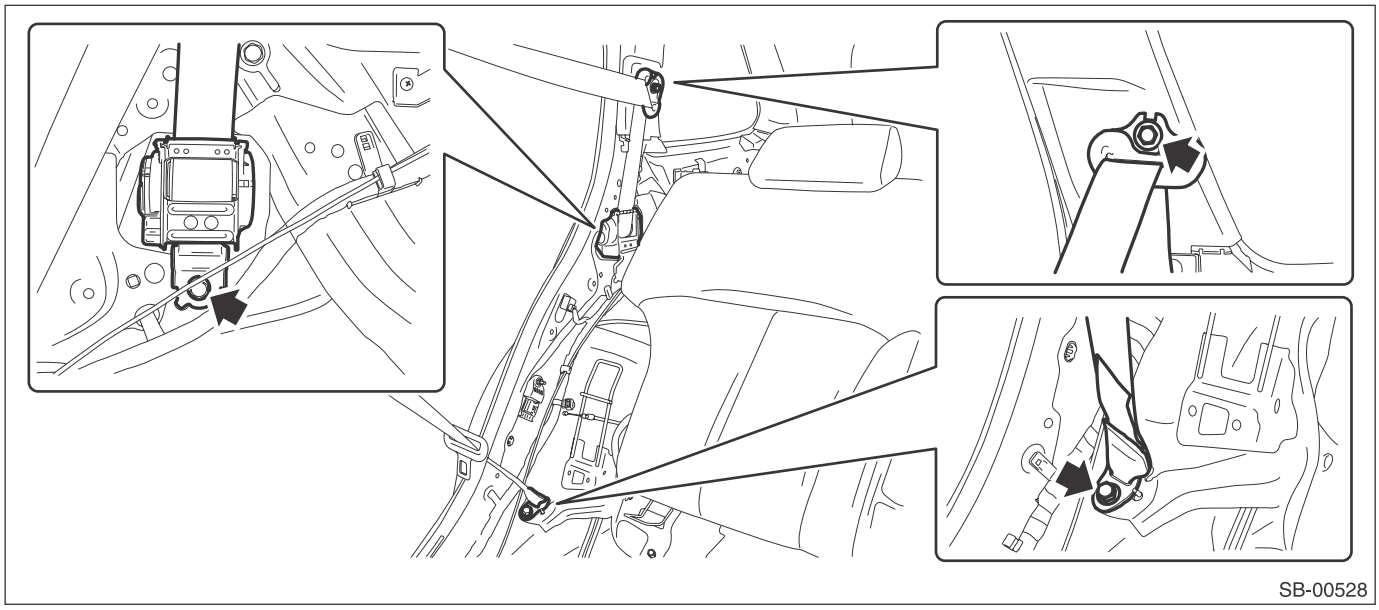

3. SHOULDER BELT ASSEMBLY CTR (SEDAN MODEL)

1) Disconnect the ground cable from battery and wait for at least 60 seconds before starting work.

CAUTION:
The airbag system is fitted with a backup power supply. After disconnecting the battery ground cable, the airbag may deploy if you do not wait for 60 seconds before starting the service of airbag system.

2) Remove the rear seat cushion.
   (1) Pull up the seat cushion and release the hook.

CAUTION:
If the hook is removed from vehicle body, replace the hook with the new part to avoid the deterioration of seat securing.

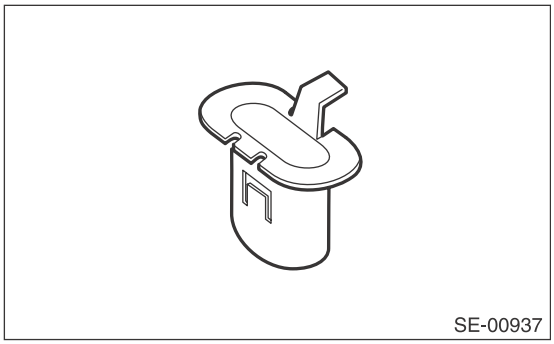
SE-00937

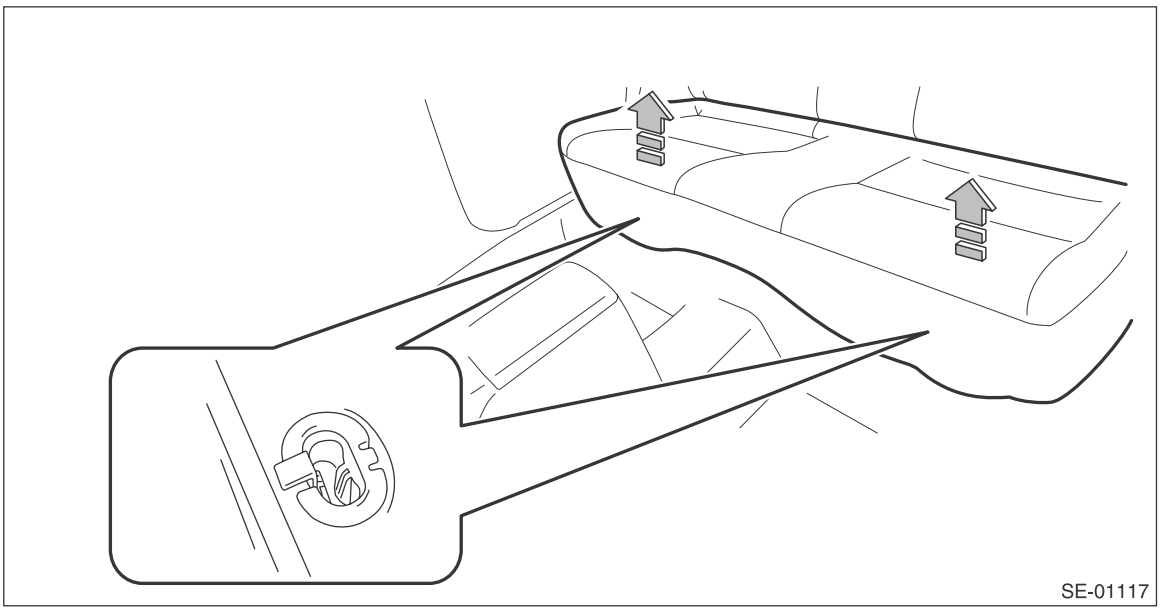
SE-01117

(2) Remove the hook (A) by pushing it back while lifting the front side of the seat cushion, and remove the seat cushion.

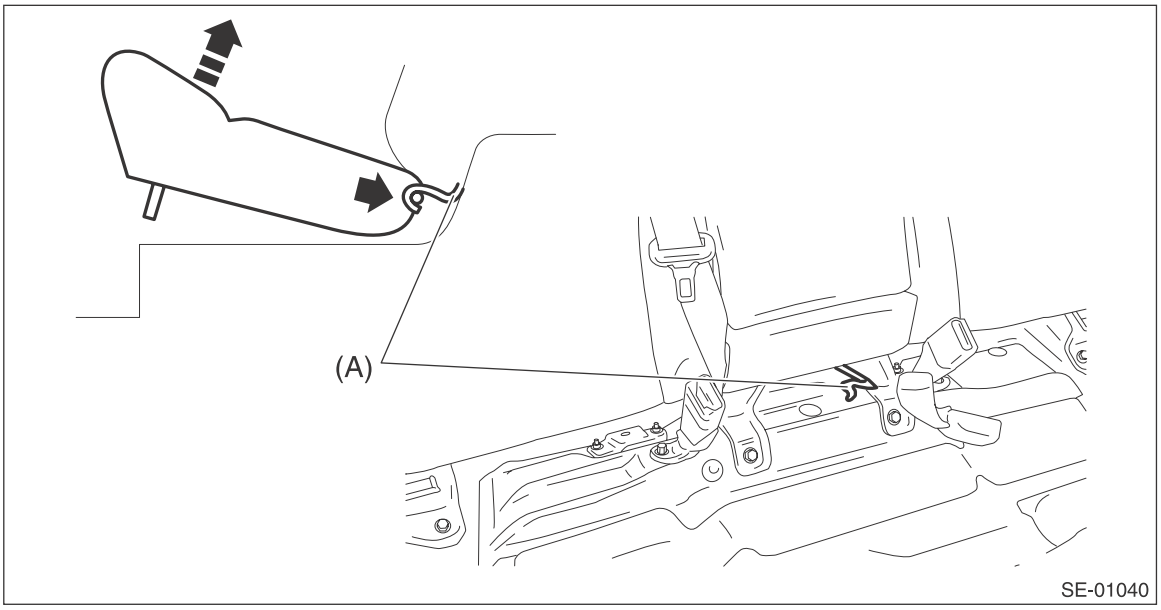

3) Release the clips and claws, and then remove the left and right side sill covers-rear INN.

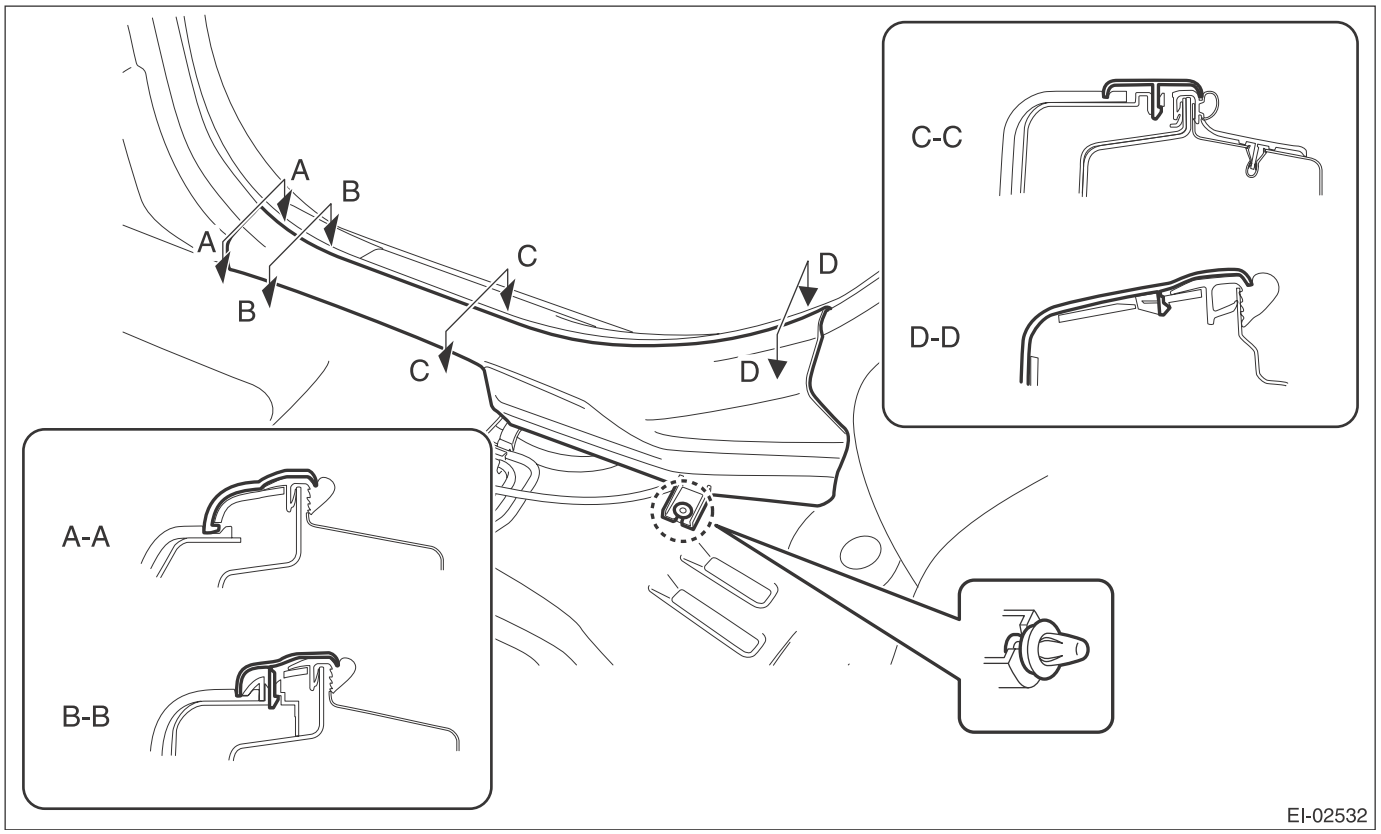

CAUTION:
Do not pull with excessive force. Doing so may damage the claws of the side sill cover INN.

NOTE:
To release the claws of the side sill cover INN, the following steps are recommended.
1. Take out the weather strip from under the side sill cover INN.
2. Turn over the floor mat and release the claws (C) and (D) by accessing from behind the side sill cover INN.

4) Remove the left and right rear quarter trim LWR.
(1) Remove the left and right backrest side pad.
a) Remove the screws.

Preparation tool: Stubby screwdriver

b) Turn over the bottom end of the backrest side pad in the forward direction so that the claws are released.
c) Remove the backrest side pad by pulling it up.

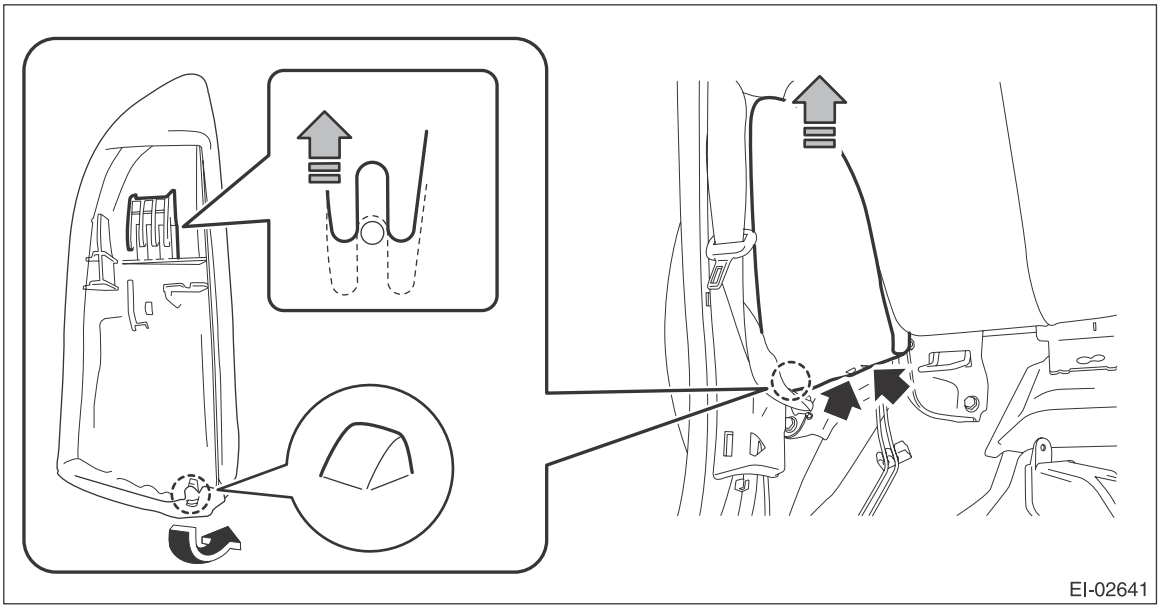

(2) Pull the release lever in the trunk room, and then tilt the left and right backrest forward.

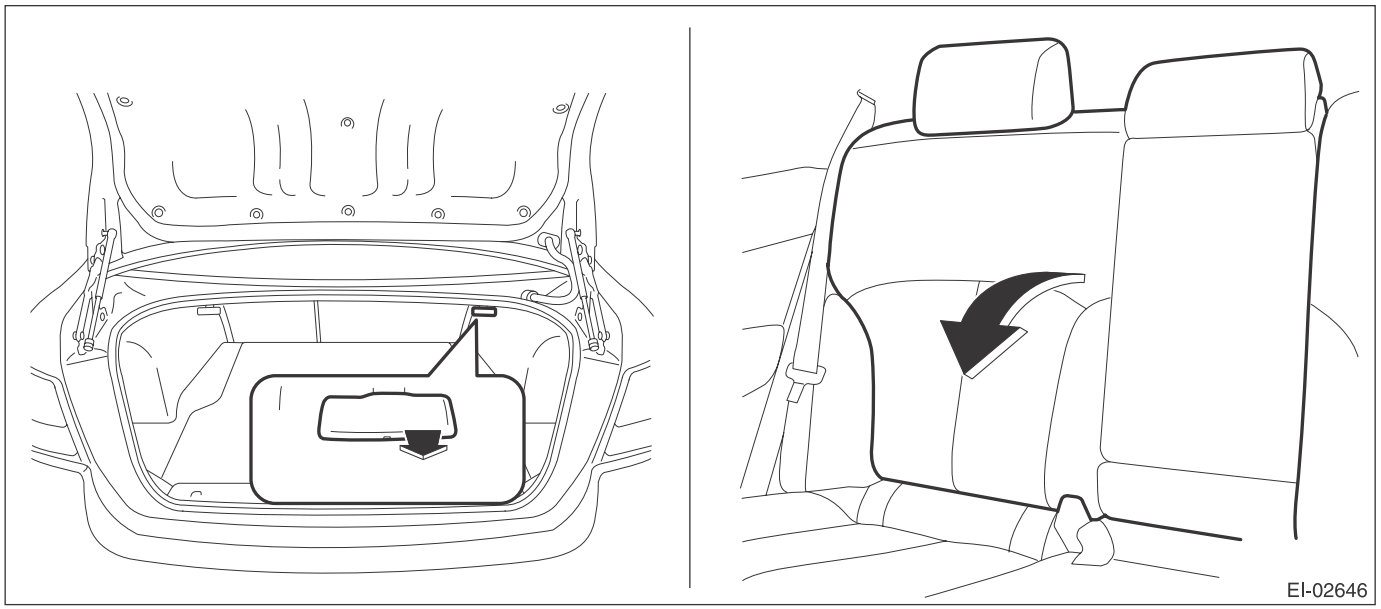

(3) Release the clips of the trunk trim panel assembly-side.

(4) Remove the clips, and remove the left and right rear quarter trim LWR.

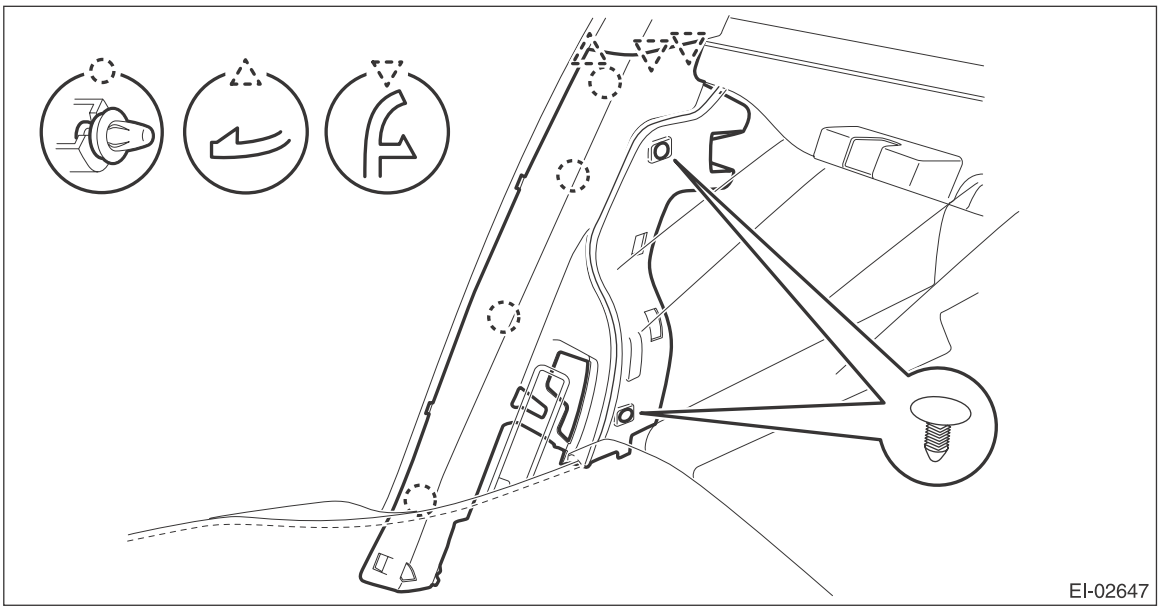

5) Remove the left and right rear quarter trim UPR.

(1) Remove the lower anchor bolt of the outer belt assembly.

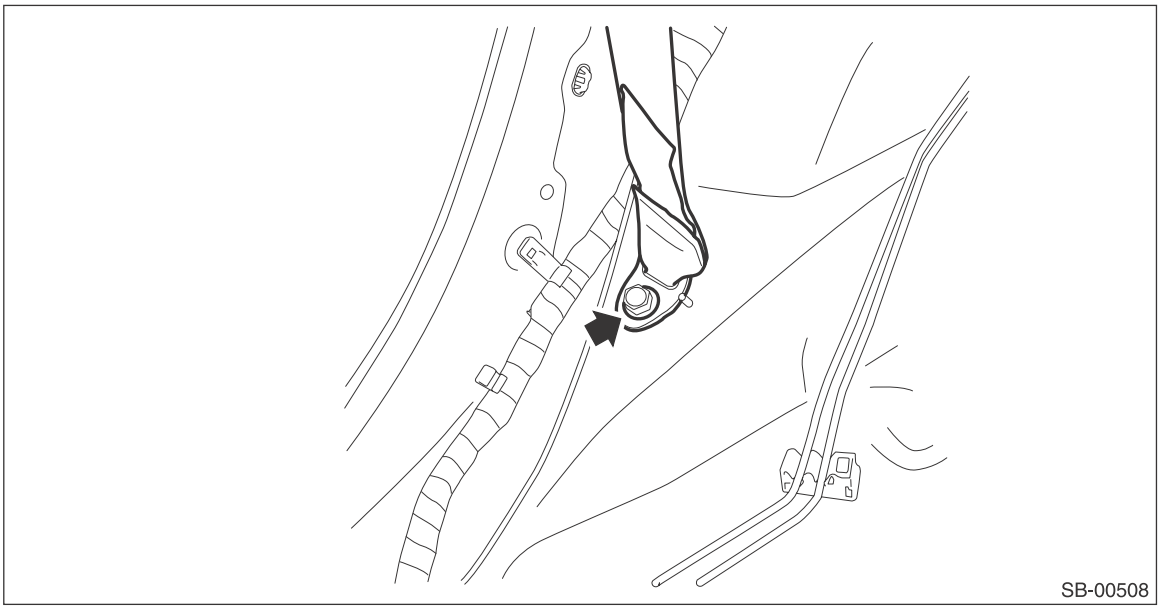

(2) Release the clips, and remove the rear quarter trim UPR.

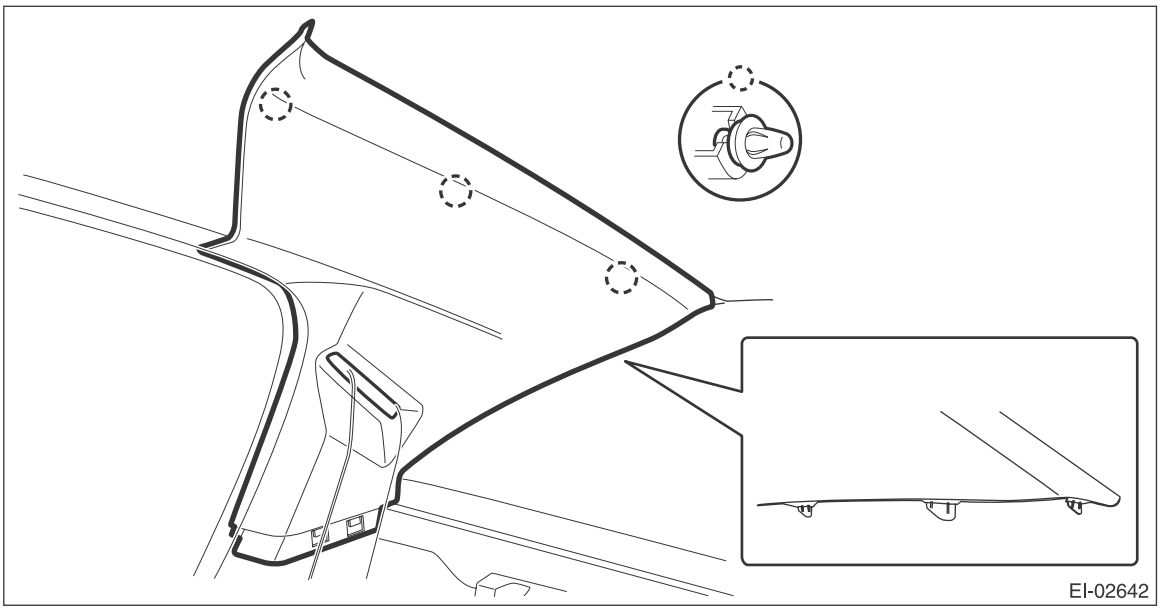

(3) Pull out the seat belt and remove the rear quarter trim UPR.

6) Release the clips and remove the left and right trunk trim panel assembly-front.

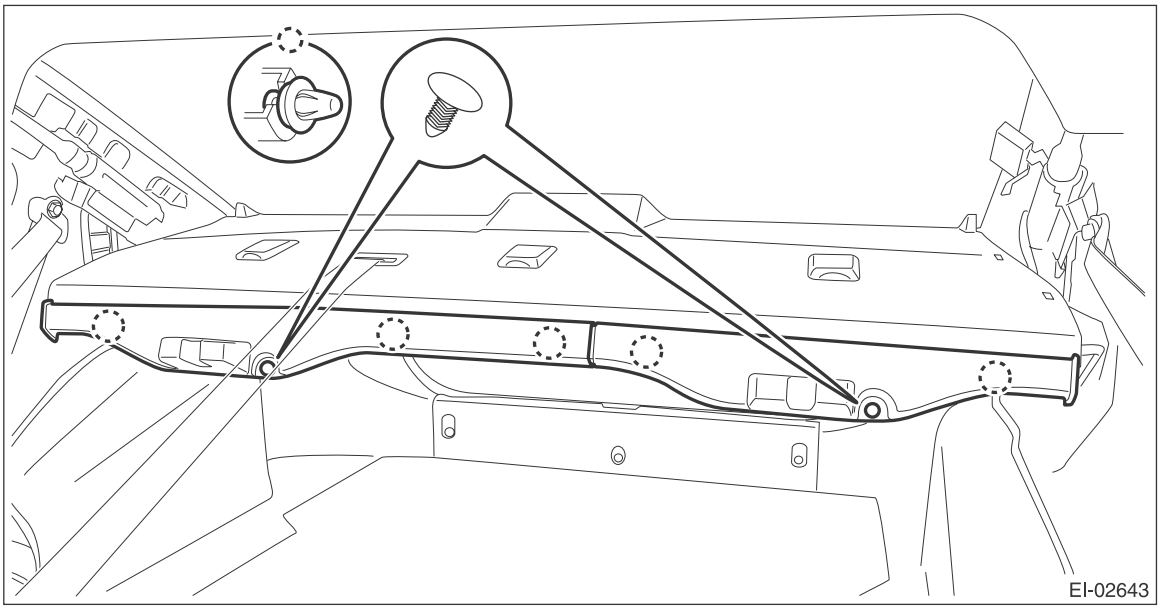

7) Remove the lower anchor of the shoulder belt assembly CTR.

(1) Remove the nuts and remove the ISO-FIX anchor.

(2) Remove the bolts, and remove the lower anchor of shoulder belt assembly CTR.

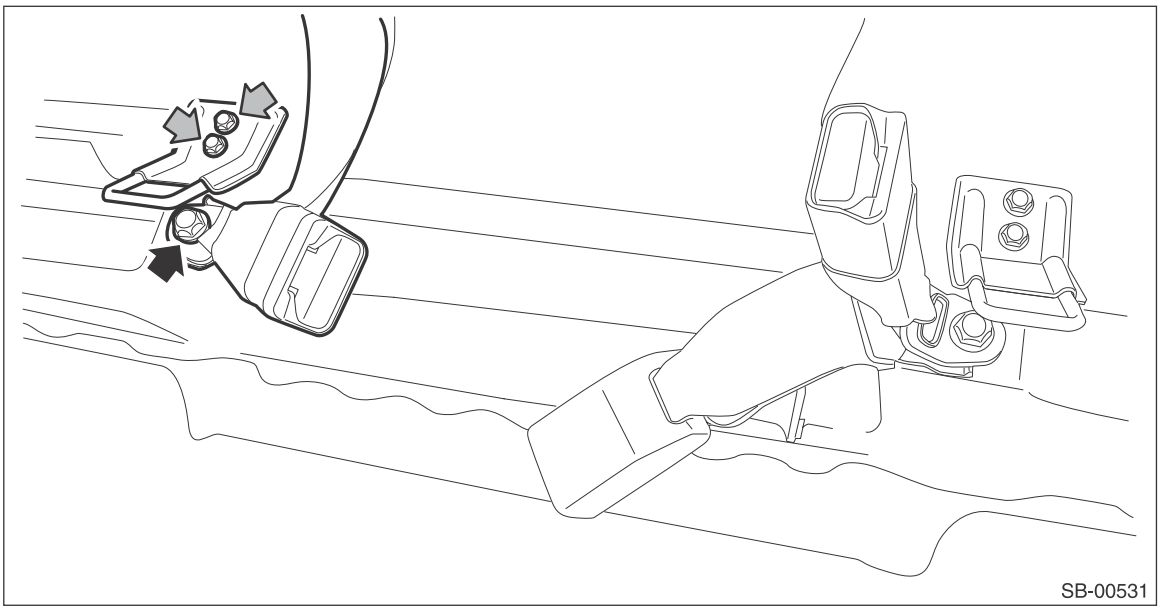

8) Remove the rear shelf panel assembly.
(1) Release the clips to float the rear shelf panel assembly.
(2) Release the belt guide and guide the anchor of rear center seat belt to behind the shelf panel.
(3) Disconnect the connector of high-mounted stop light.
(4) Remove the rear shelf panel assembly.

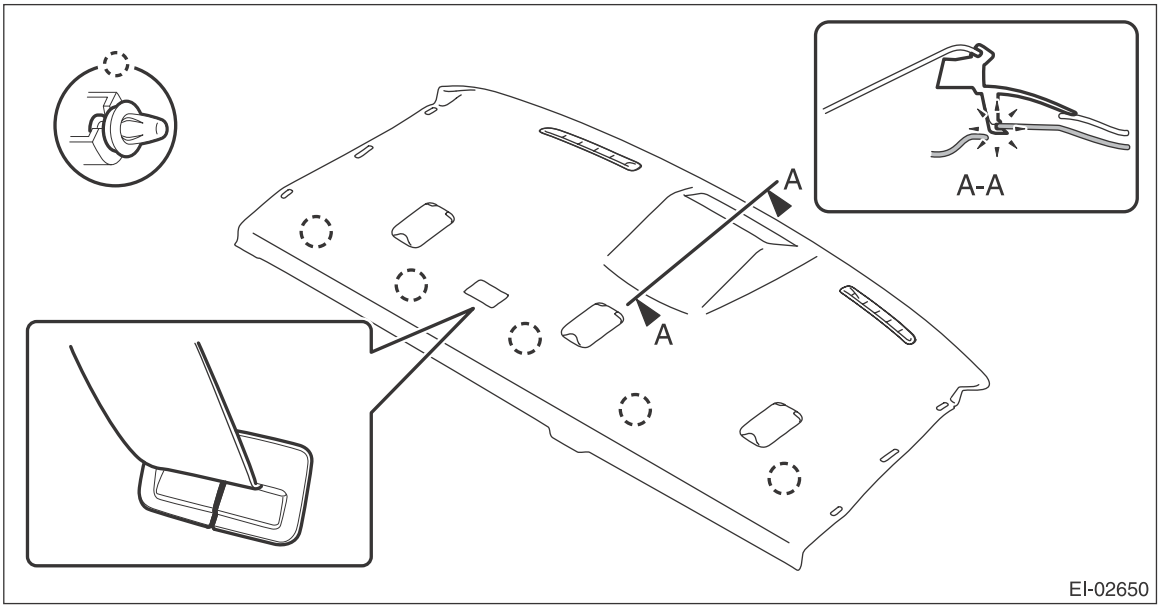

9) Remove the bolts, and remove the shoulder belt assembly CTR.

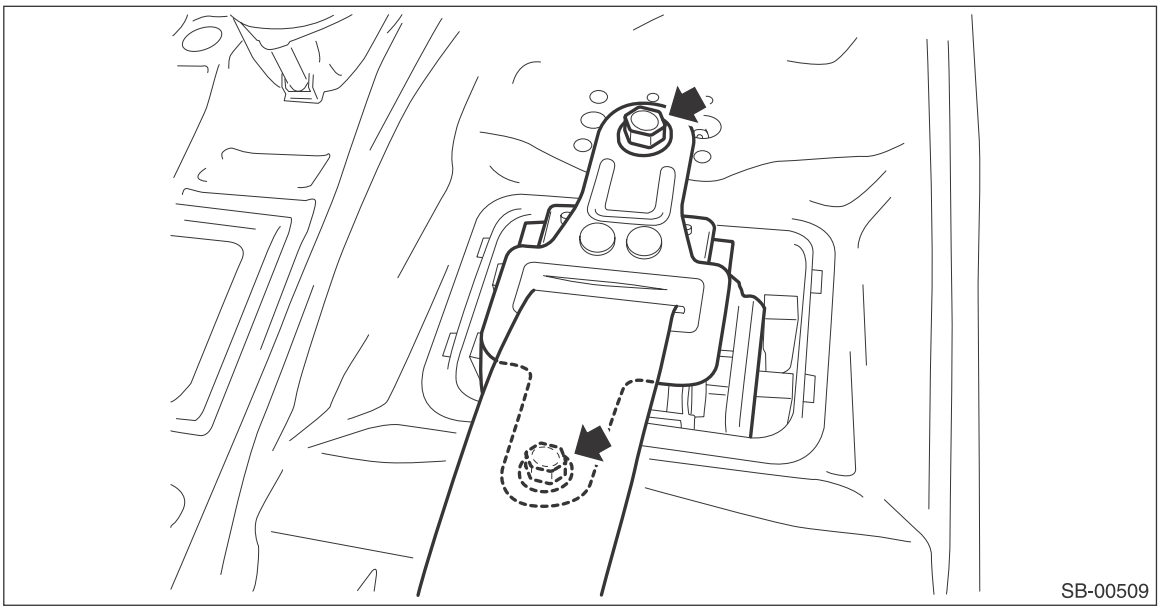

4. SHOULDER BELT ASSEMBLY CTR (OUTBACK MODEL)

1) Disconnect the ground cable from battery and wait for at least 60 seconds before starting work.

CAUTION:
The airbag system is fitted with a backup power supply. After disconnecting the battery ground cable, the airbag may deploy if you do not wait for 60 seconds before starting the service of airbag system.

2) Remove the rear seat cushion.
   (1) Pull up the seat cushion and release the hook.

CAUTION:
If the hook is removed from vehicle body, replace the hook with the new part to avoid the deterioration of seat securing.

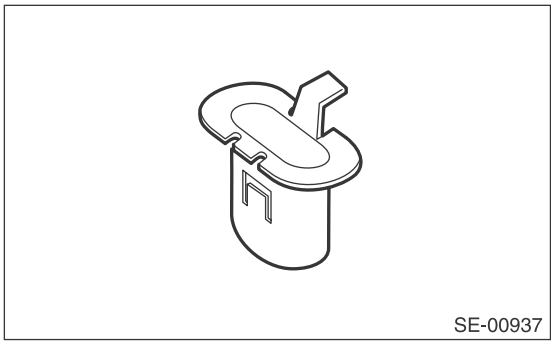
SE-00937

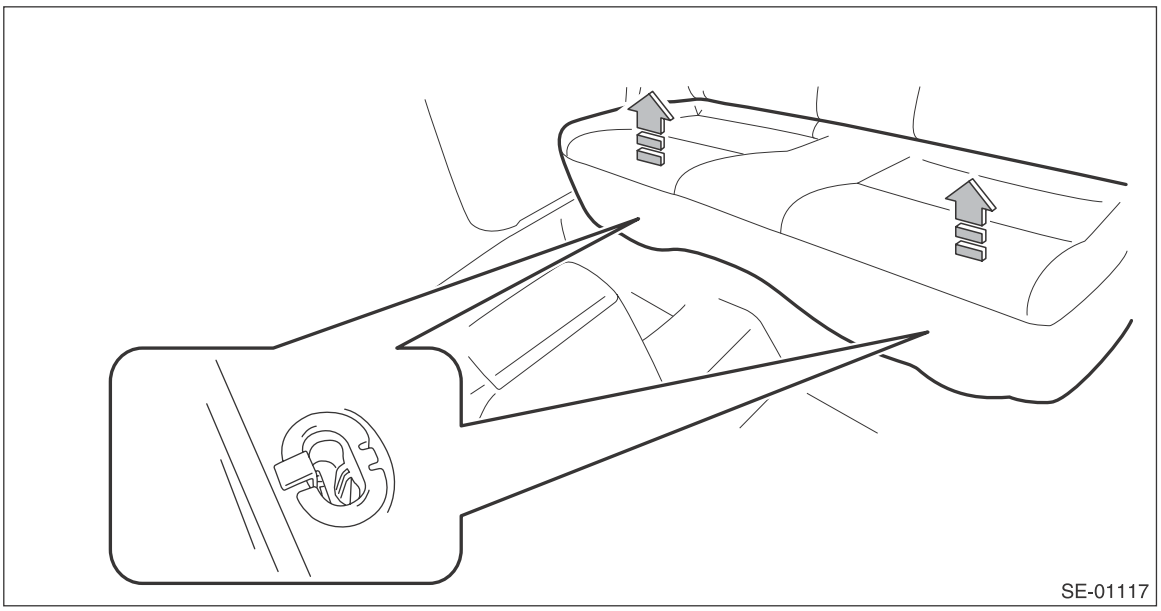
SE-01117

(2) Remove the hook (A) by pushing it back while lifting the front side of the seat cushion, and remove the seat cushion.

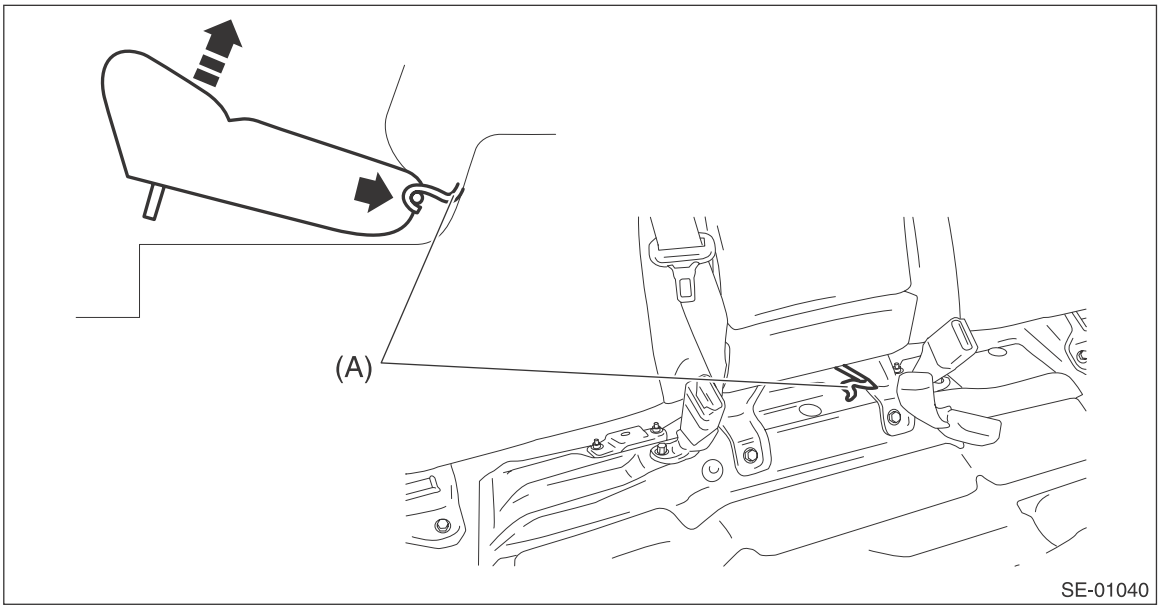

3) Release the clips and claws, and then remove the left and right side sill covers-rear INN.

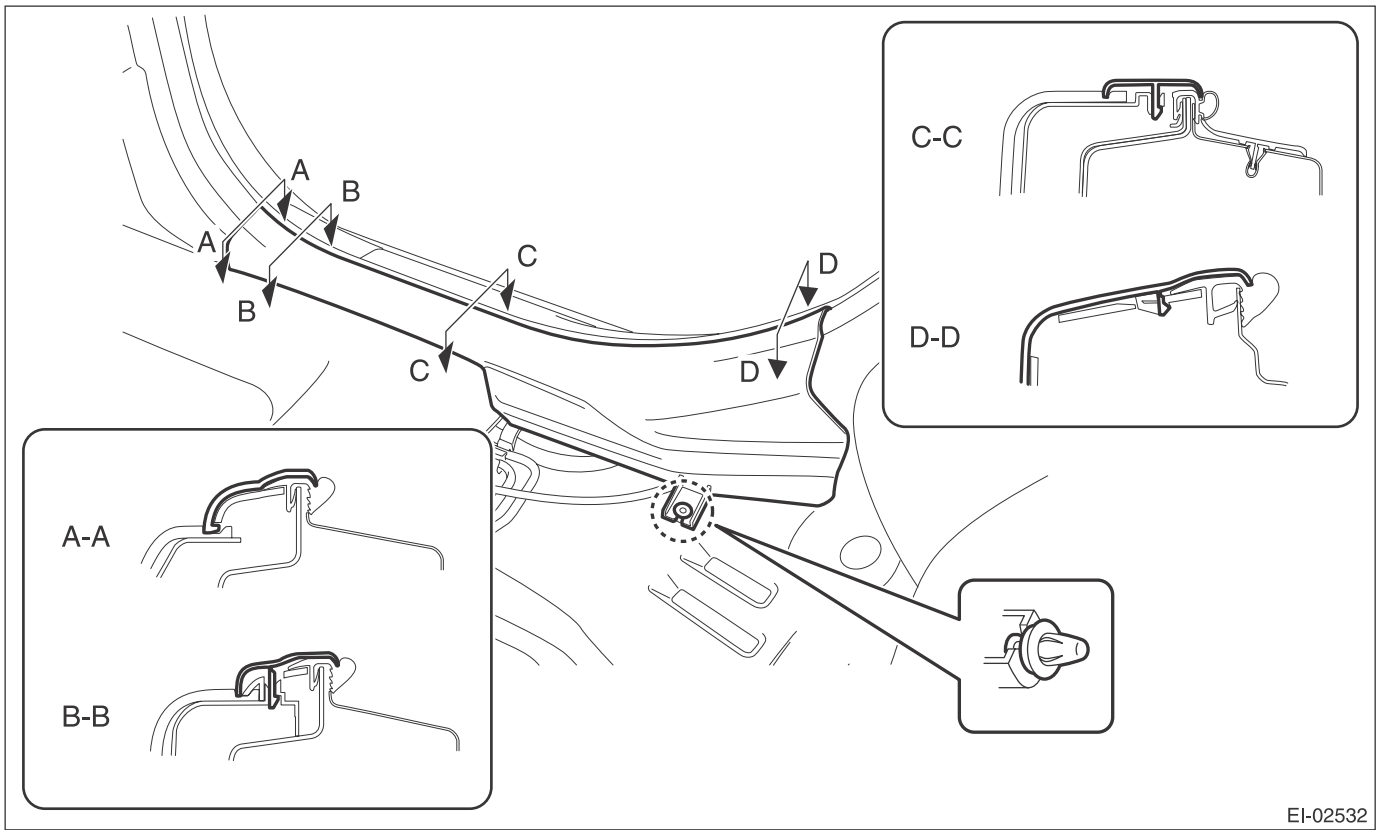

CAUTION:
Do not pull with excessive force. Doing so may damage the claws of the side sill cover INN.

NOTE:
To release the claws of the side sill cover INN, the following steps are recommended.
1. Take out the weather strip from under the side sill cover INN.
2. Turn over the floor mat and release the claws (C) and (D) by accessing from behind the side sill cover INN.

4) Tilt the backrest forward, and then turn over the backrest backside mat.

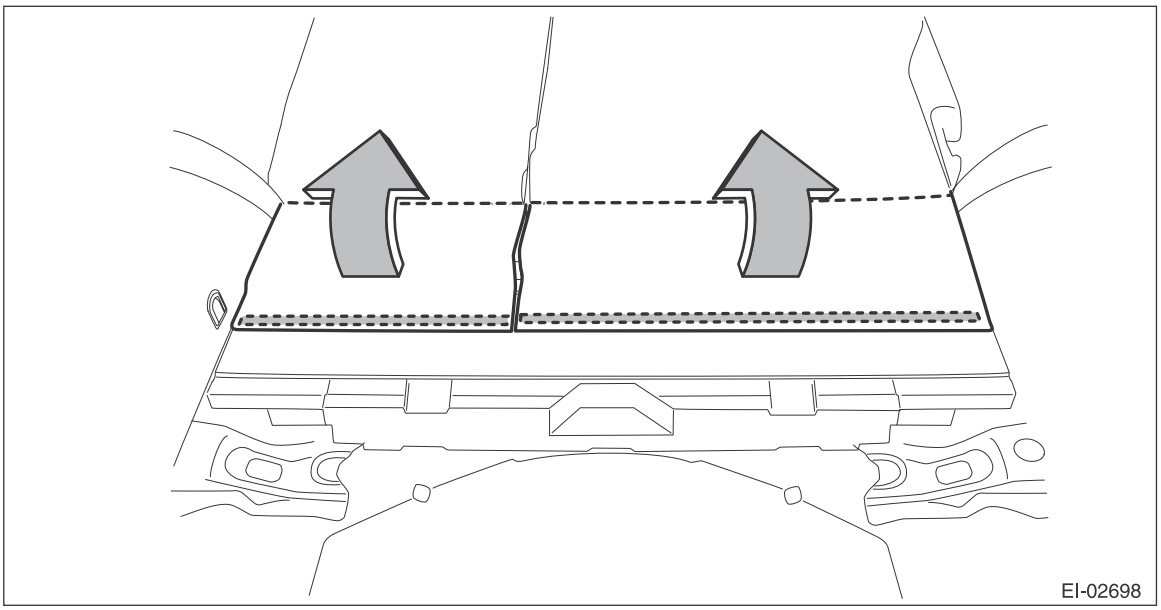

5) Remove the left and right backrest side pad assembly.
   (1) Disconnect the backrest cable and reclining lever cable.
   (2) Remove the screws and remove the reclining lever assembly by pulling it downward.

Preparation tool: Stubby screwdriver

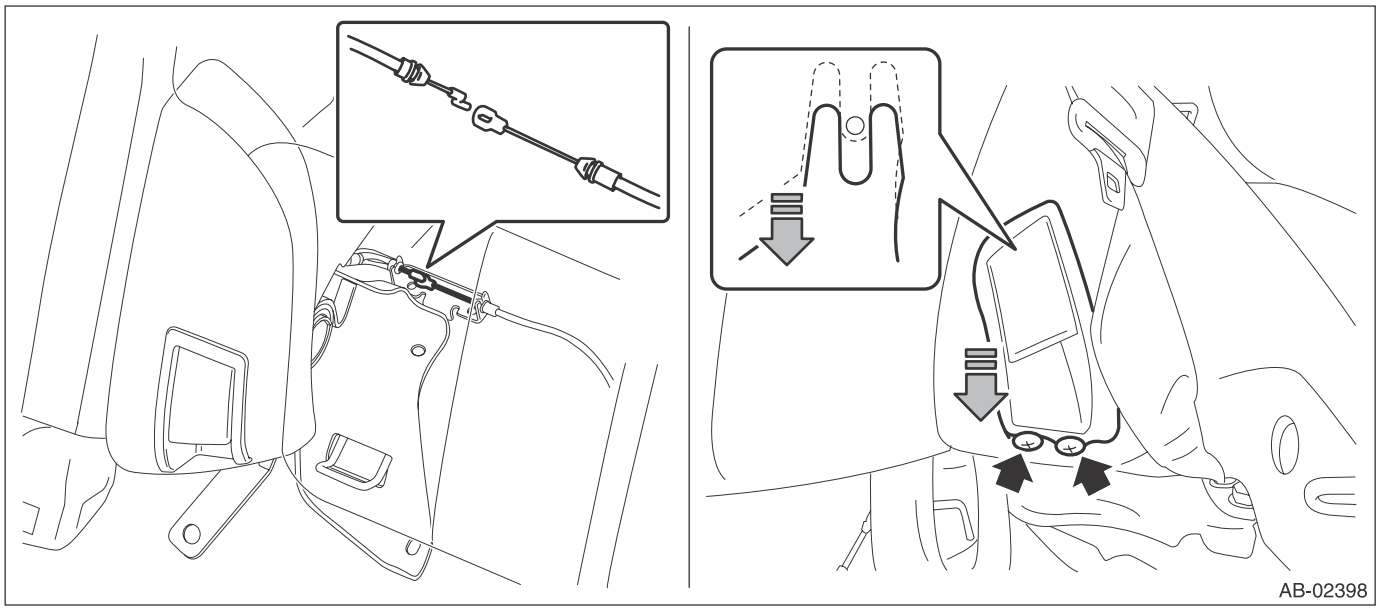

   (3) Turn over the bottom end of the backrest side pad in the forward direction so that the claws are released.

(4) Remove the backrest side pad by pulling it up.

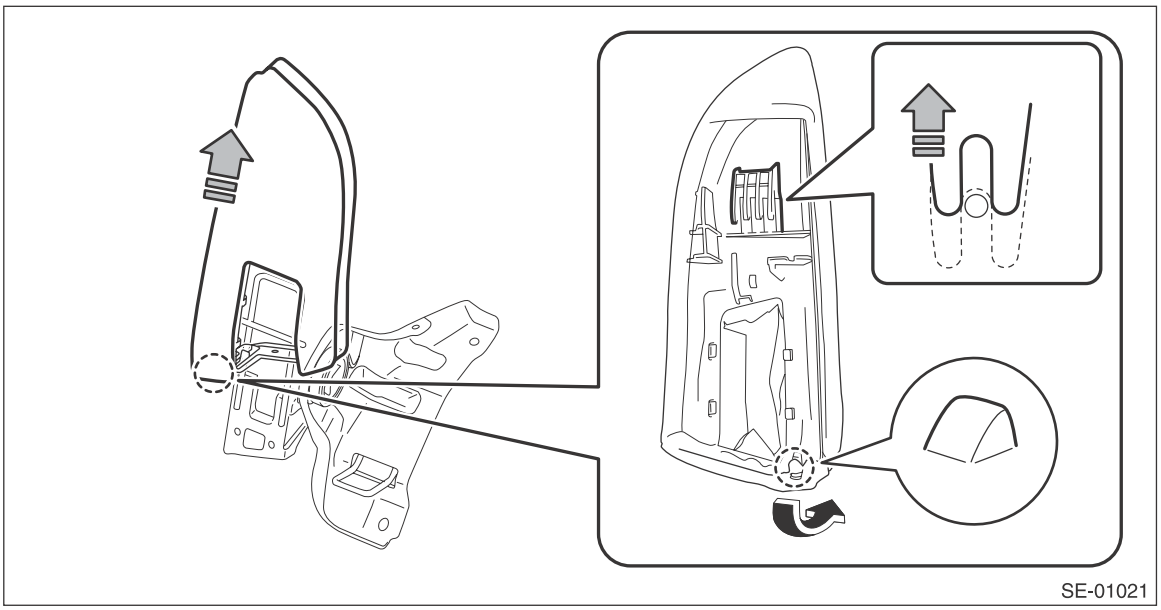

6) Remove the clips, and remove the luggage floor box and rear floor edge cover.

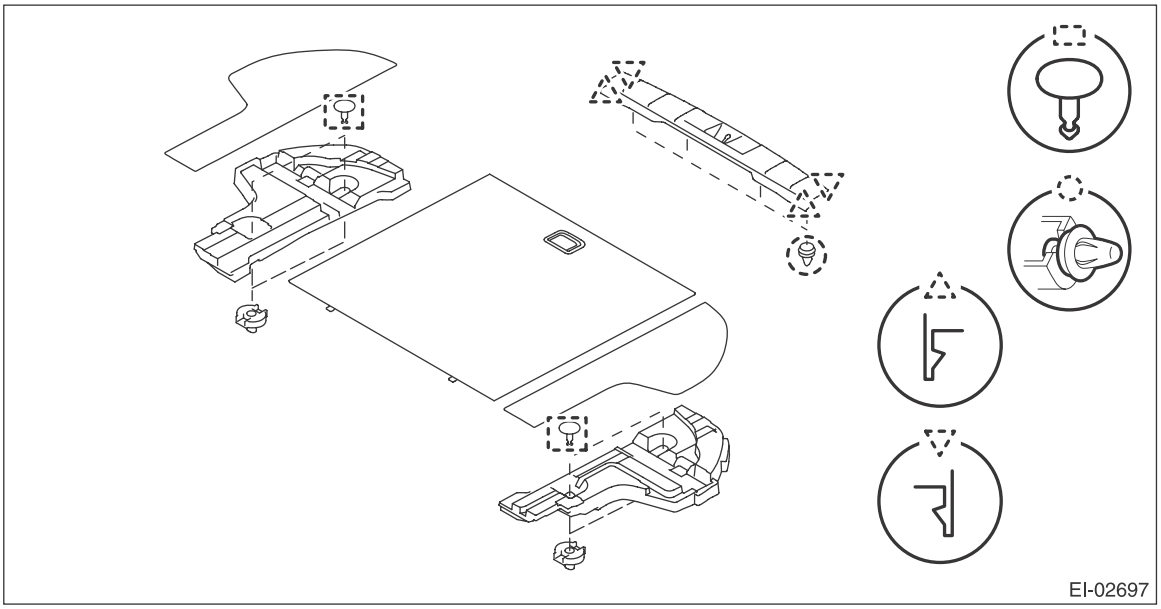

7) Remove the left and right rear quarter trim LWR.
(1) Remove the caps, screws, and bolts. (A), (C)
(2) Take out the hook and remove the screw inside. (B)

(3) Remove the clips, and remove the rear quarter trim LWR.

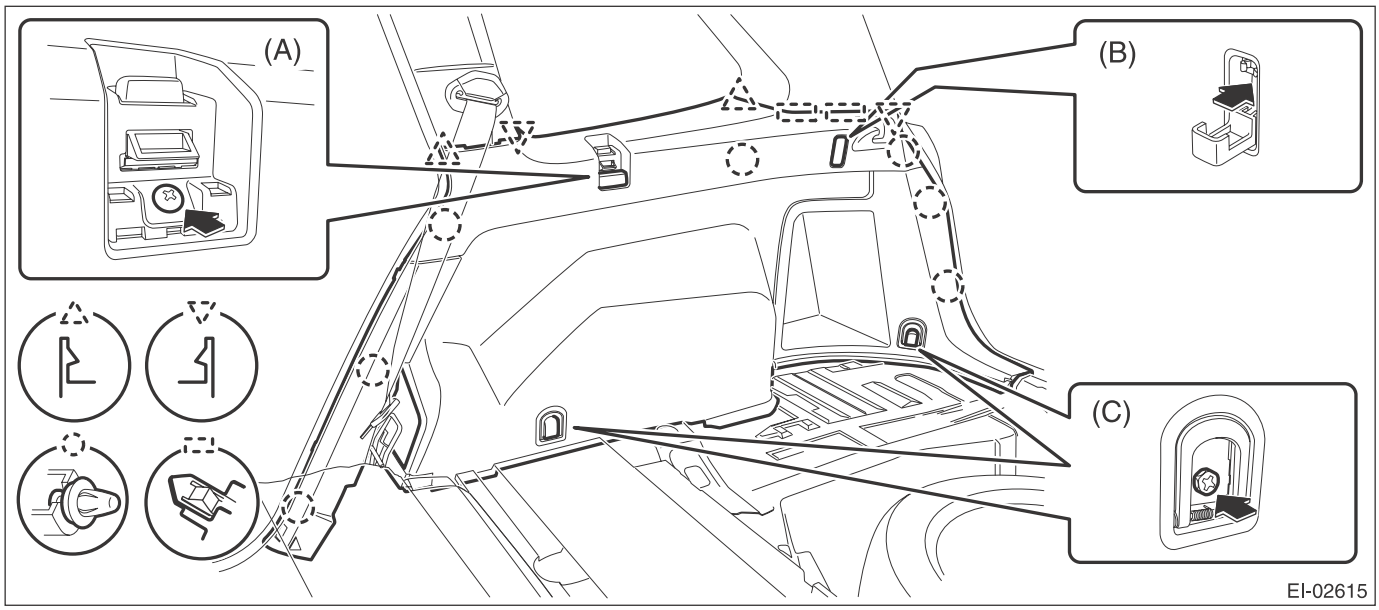

8) Remove the left and right rear quarter trim UPR.
(1) Open the cap and remove the bolt to remove the seat belt anchor.
(2) Remove the clips, and remove the rear quarter trim UPR-front.
(3) Remove the clips, and remove the rear quarter trim UPR-rear.

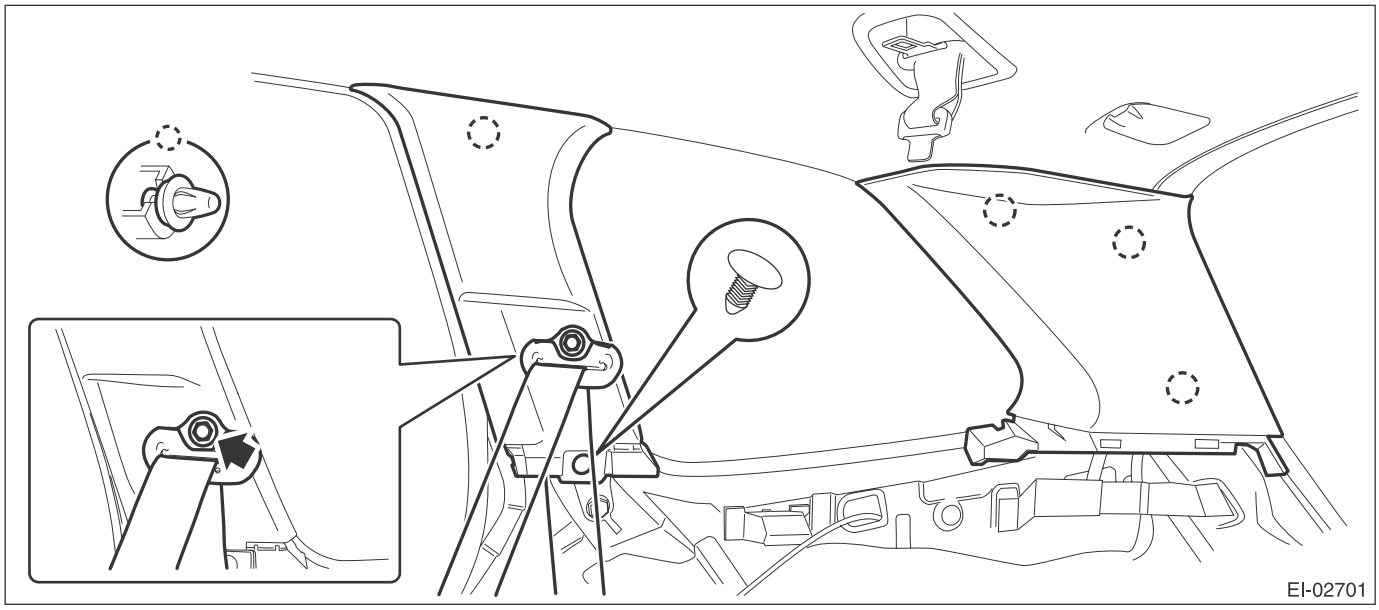

9) Remove the left and right front pillar trims.
(1) Pull the upper part of the front pillar trim towards the center of the vehicle.
(2) Insert long-nose pliers into the top part of the trim, grip the clip with the pliers and twist 90° in that position.

CAUTION:
Be careful not to damage the pillar trim surface and curtain airbag module when inserting the pliers.
(3) Holding the clip twisted as in the previous step, remove the front pillar trim from the clip.

(4) Remove the clip and the front pillar trim.

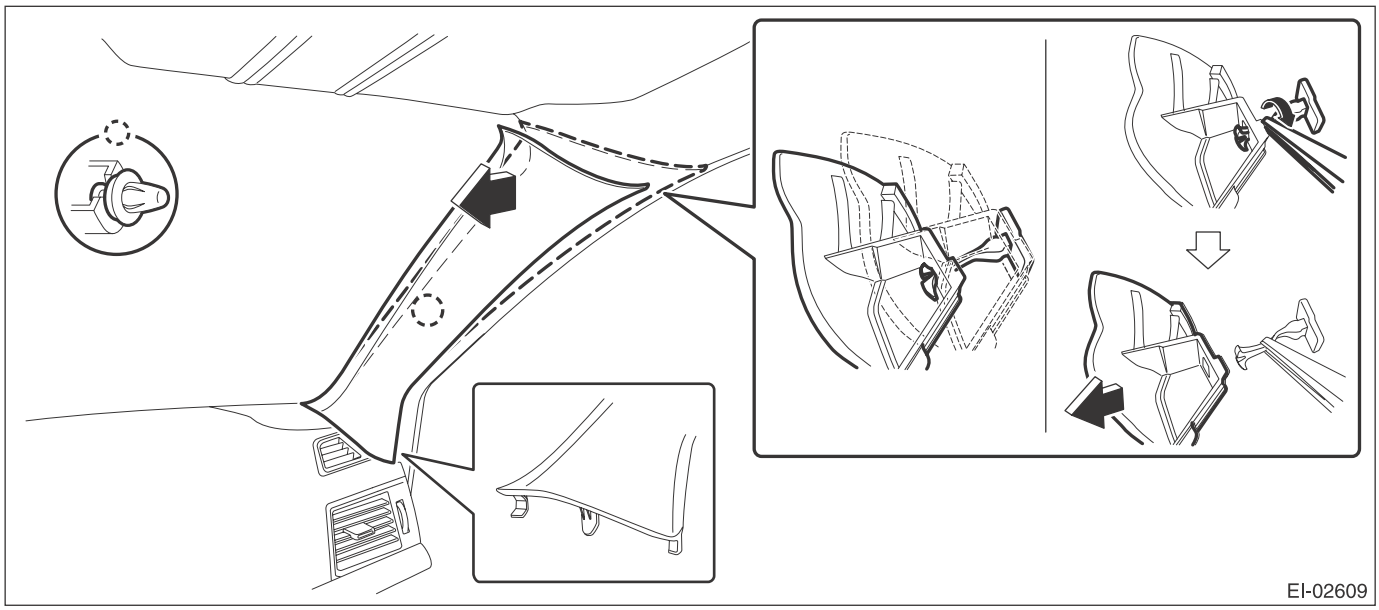

10) Release the claws, and then remove the left and right side sill cover-front INN.

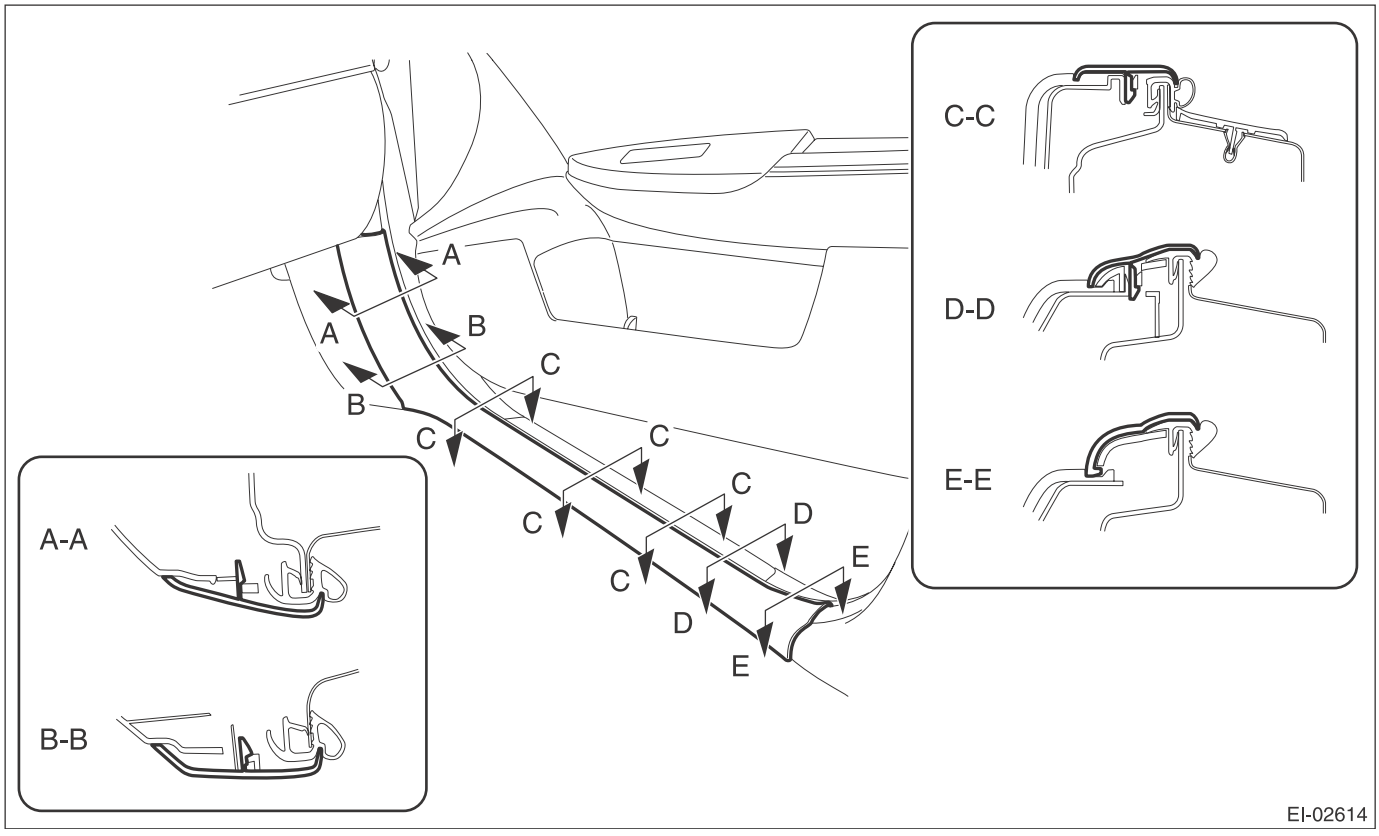

CAUTION:
Do not pull with excessive force. Doing so may damage the claws of the side sill cover INN.

NOTE:
To release the claws of the side sill cover INN, the following steps are recommended.
1. Take out the weather strip from under the side sill cover INN.
2. Turn over the floor mat and release the claw (C) by accessing from behind the side sill cover INN.

11) Remove the left and right center pillar trim LWR.
(1) Release the clip by pulling the center pillar trim LWR toward you.
(2) Expand the claws of center pillar trim LWR outward and remove it from the center pillar trim UPR.

CAUTION:
Do not expand the center pillar trim LWR excessively. Doing so may damage the trim.

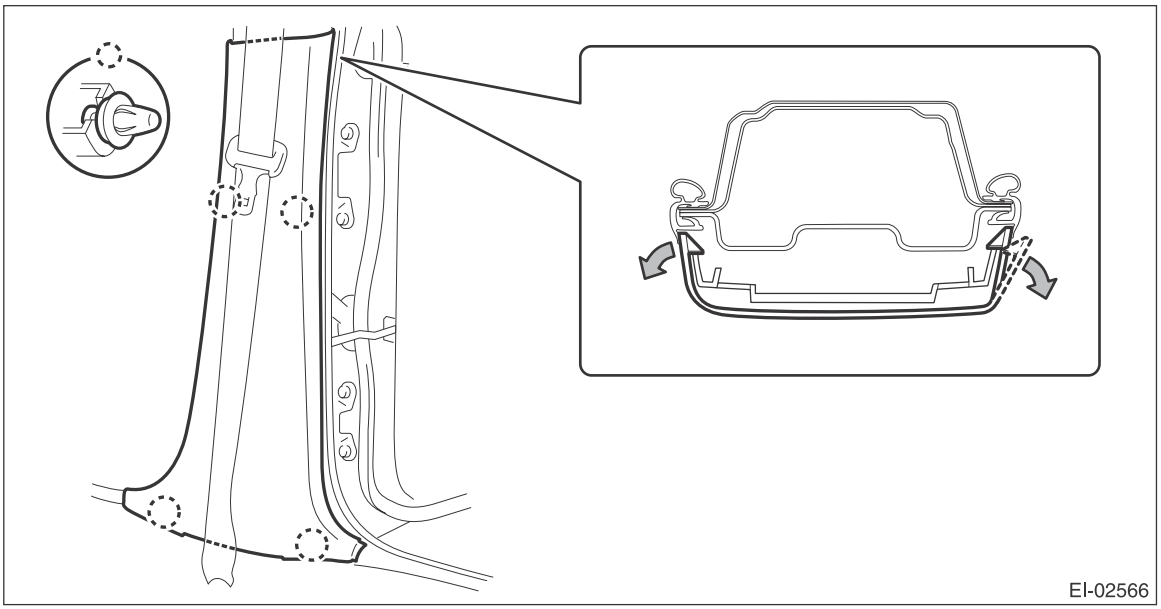

NOTE:
First release the claw located to the rear of the vehicle.
12) Remove the left and right center pillar trim UPR.
(1) Remove the seat belt lower anchor bolt.

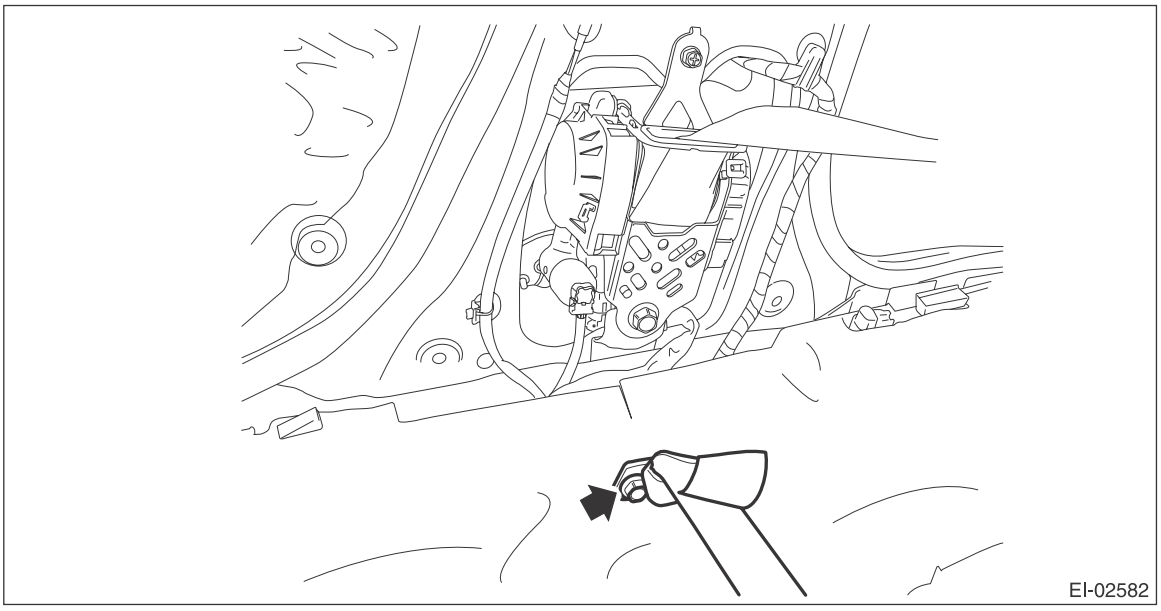

(2) Release the clip by pulling the lower part of the trim toward you.

(3) Remove the clip by pulling the upper part of the trim toward you, and while lowering the entire trim, remove the center pillar trim UPR.

CAUTION:
Do not reuse the upper clips of the center pillar trim UPR. Once the clip is removed, its holding force is reduced. Be sure to replace it with a new clip.

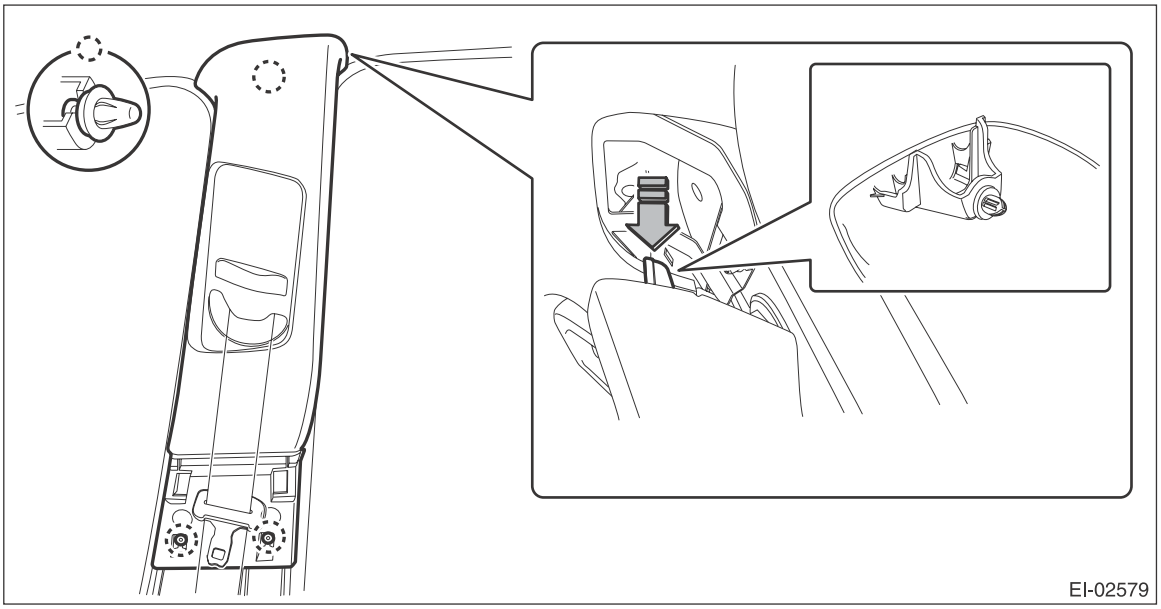

(4) Pull out the seat belt from the center pillar trim UPR.

13) Remove the overhead console assembly.
(1) Push and open the rear end of the overhead console lid, and remove the screws.
(2) Disconnect the connector and remove the overhead console assembly.

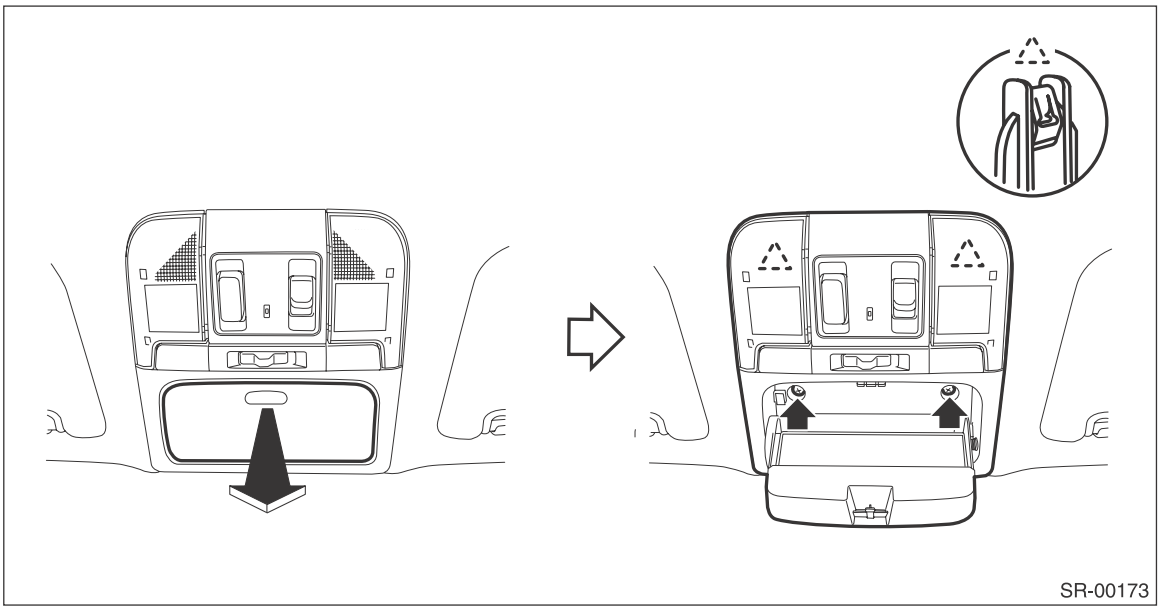

14) Remove the left and right sun visor assembly.
(1) Remove the cover, loosen the screws, and remove the sun visor assembly.
(2) Press the both sides of the sun visor hook using a flat tip screwdriver.

(3) Remove the sun visor hook by pulling toward you.

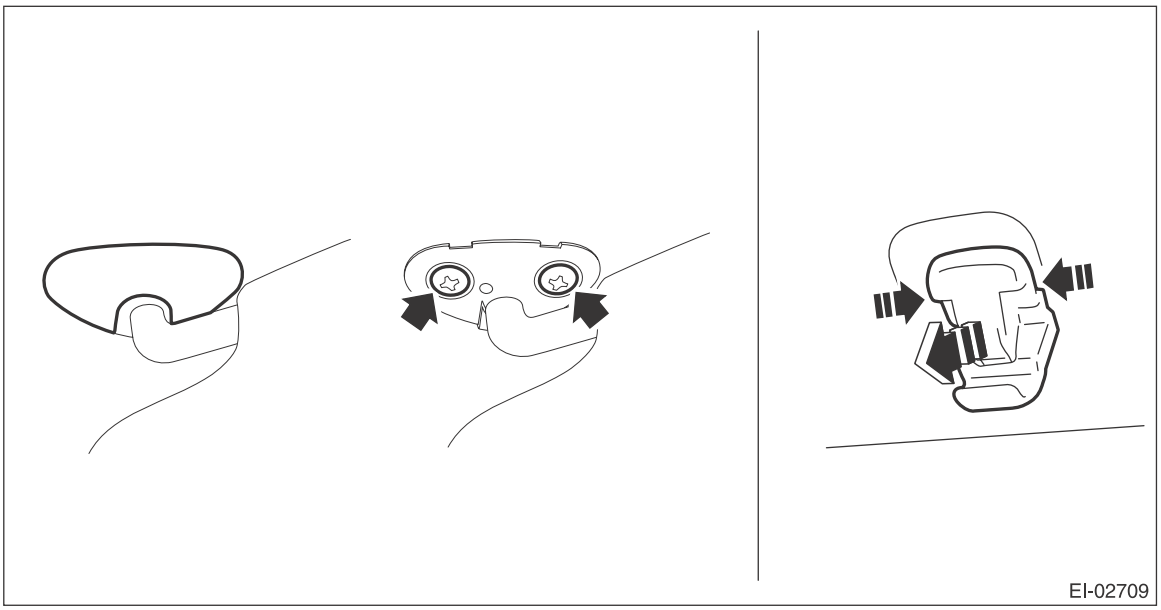

15) Remove the room light assembly.
(1) Release the claws and remove the cover.
(2) Remove the two screws.

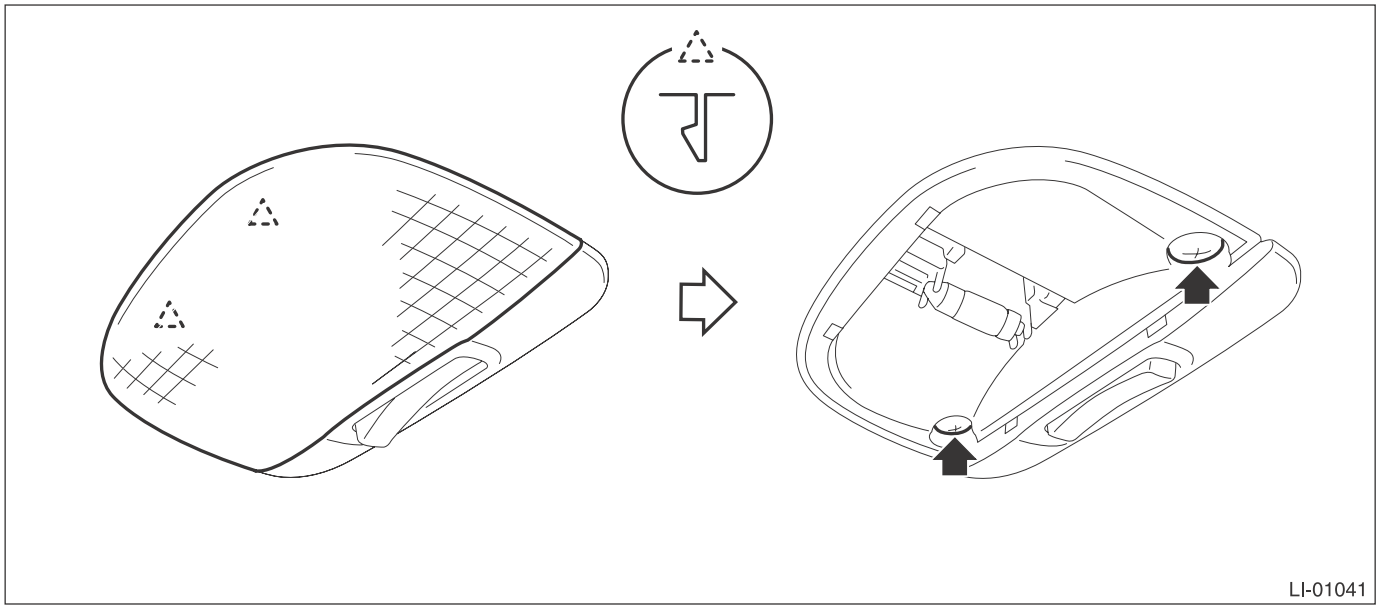

(3) Disconnect the connector and remove the room light assembly.
16) Remove the luggage room light.
(1) Release the claws and remove the luggage room light main body.

(2) Disconnect the connector and remove the luggage room light.

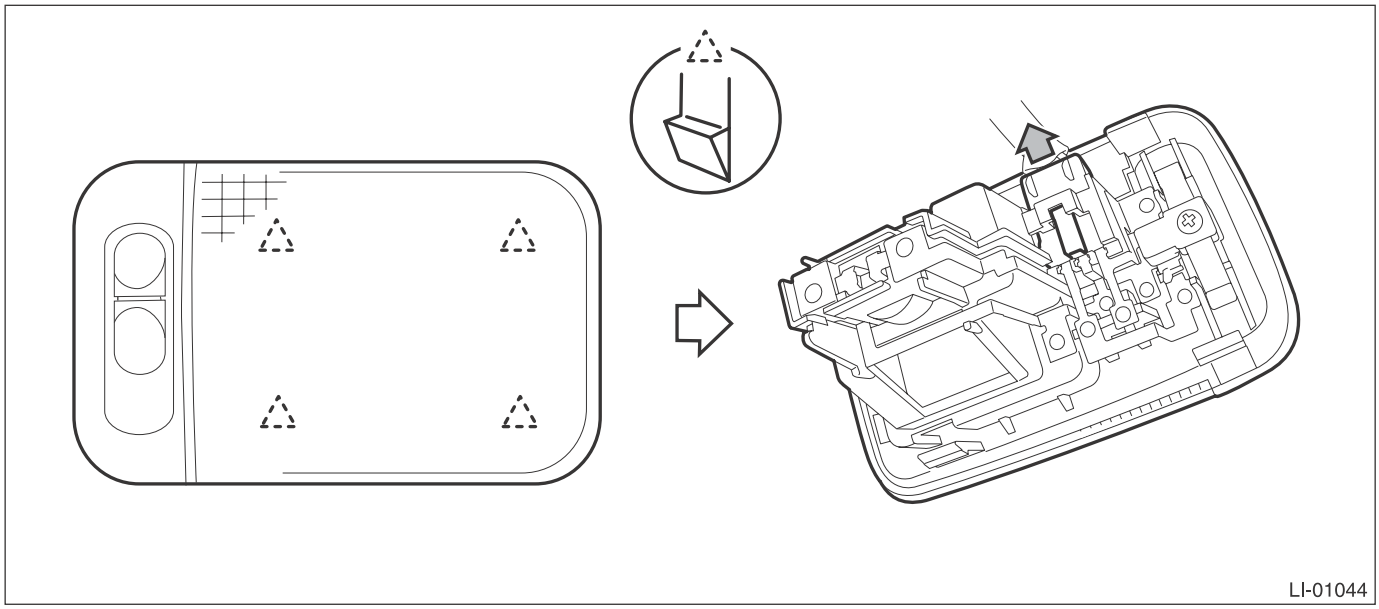

17) Remove all assist grip assembly.
(1) Remove the cap (a) by pulling the both sides of the cap (a) using a flat tip screwdriver wrapped with a protection tape.
(2) Pull the assist grip toward you (to the vehicle center) and remove the metal clip from the bracket.

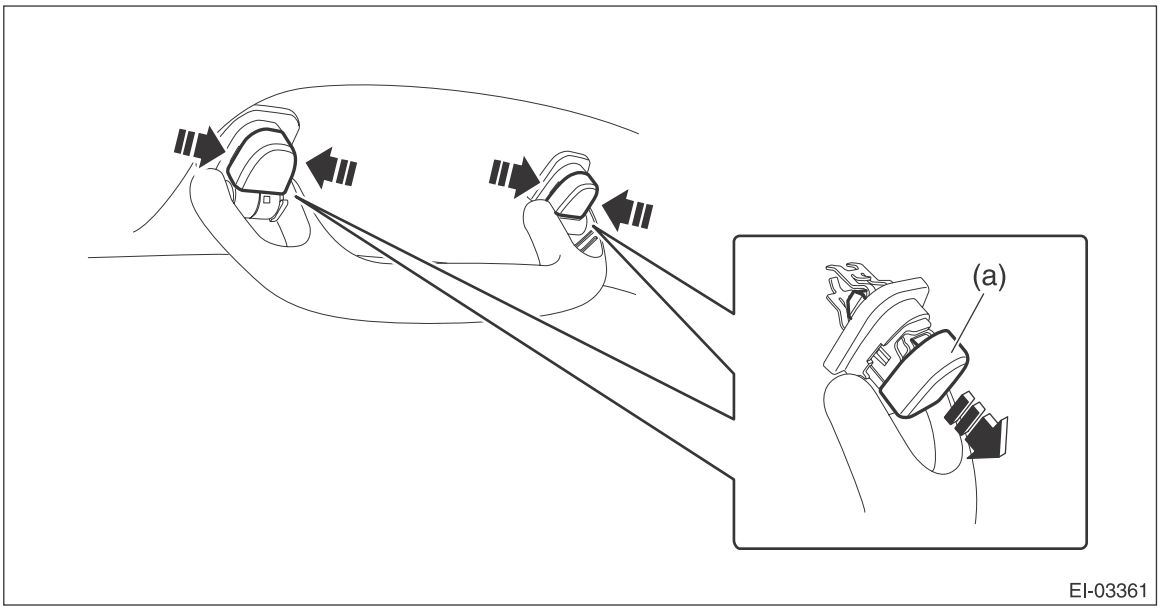

18) Remove the sun roof garnish. (Model with sunroof)

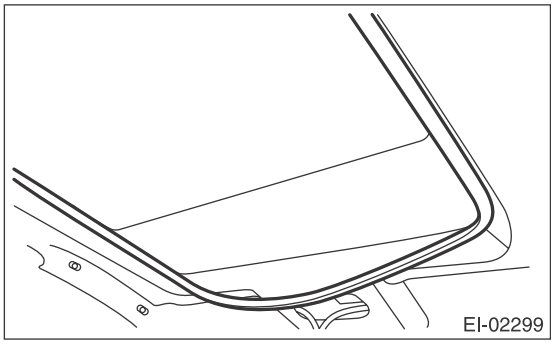

19) Disconnect the roof harness connector at the front pillar RH.

20) Remove the roof trim assembly.
(1) Release the clips and remove the feeder cable from the roof trim.
(2) Take out the roof trim assembly from the rear gate opening to outside.

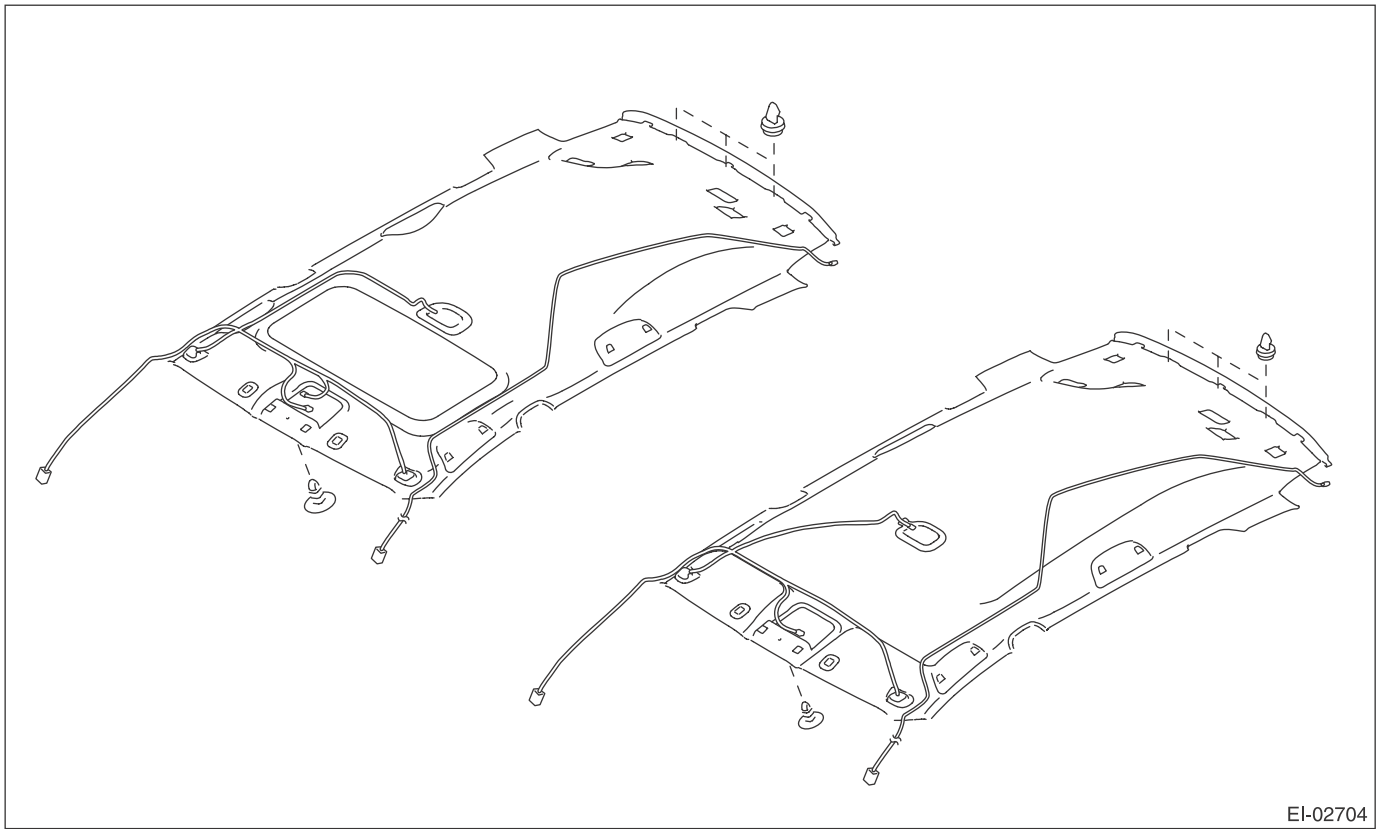

21) Remove the bolts, and remove the shoulder belt assembly CTR.

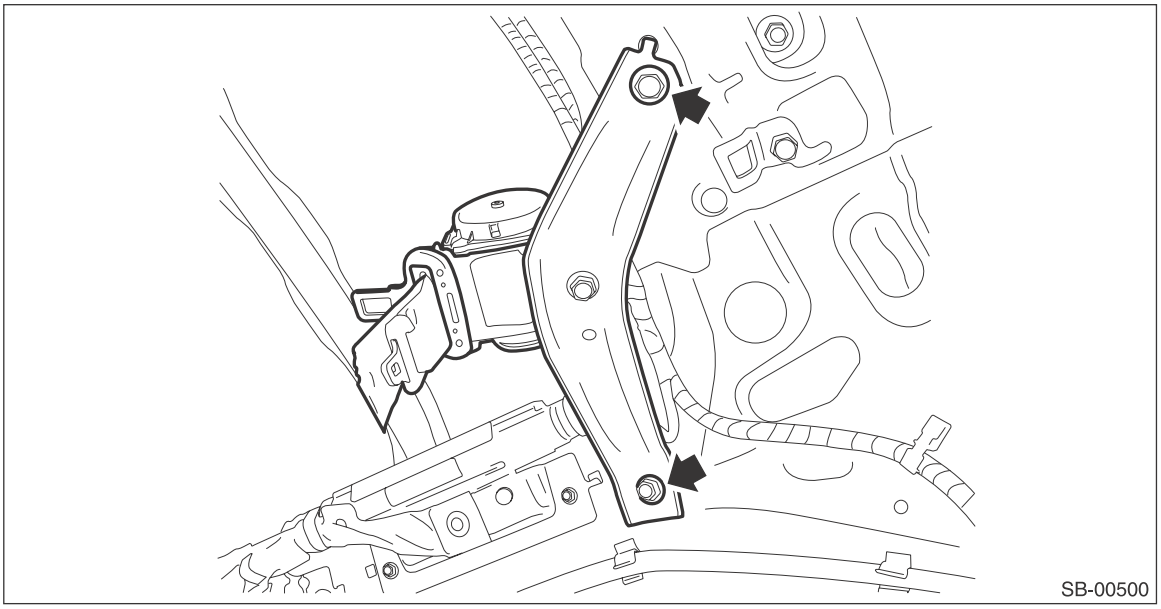

5. CENTER BELT RH ASSEMBLY & LH ASSEMBLY

1) Disconnect the ground cable from battery and wait for at least 60 seconds before starting work.

CAUTION:
The airbag system is fitted with a backup power supply. After disconnecting the battery ground cable, the airbag may deploy if you do not wait for 60 seconds before starting the service of airbag system.

2) Remove the rear seat cushion.
   (1) Pull up the seat cushion and release the hook.

CAUTION:
If the hook is removed from vehicle body, replace the hook with the new part to avoid the deterioration of seat securing.

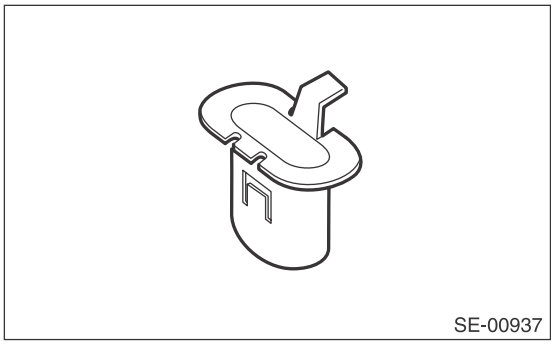
SE-00937

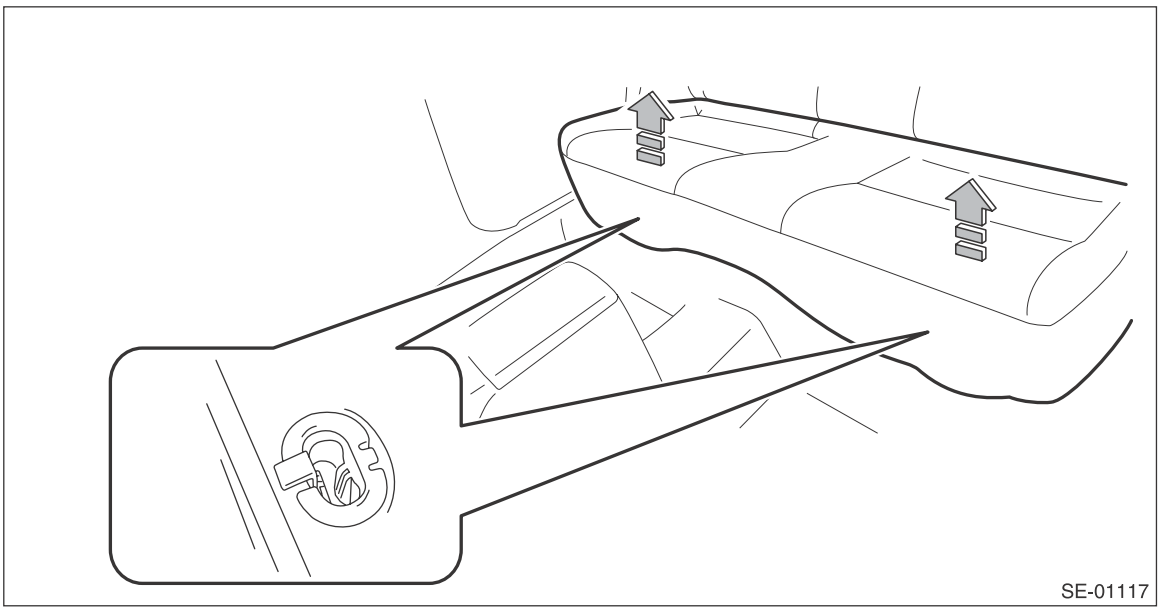
SE-01117

(2) Remove the hook (A) by pushing it back while lifting the front side of the seat cushion, and remove the seat cushion.

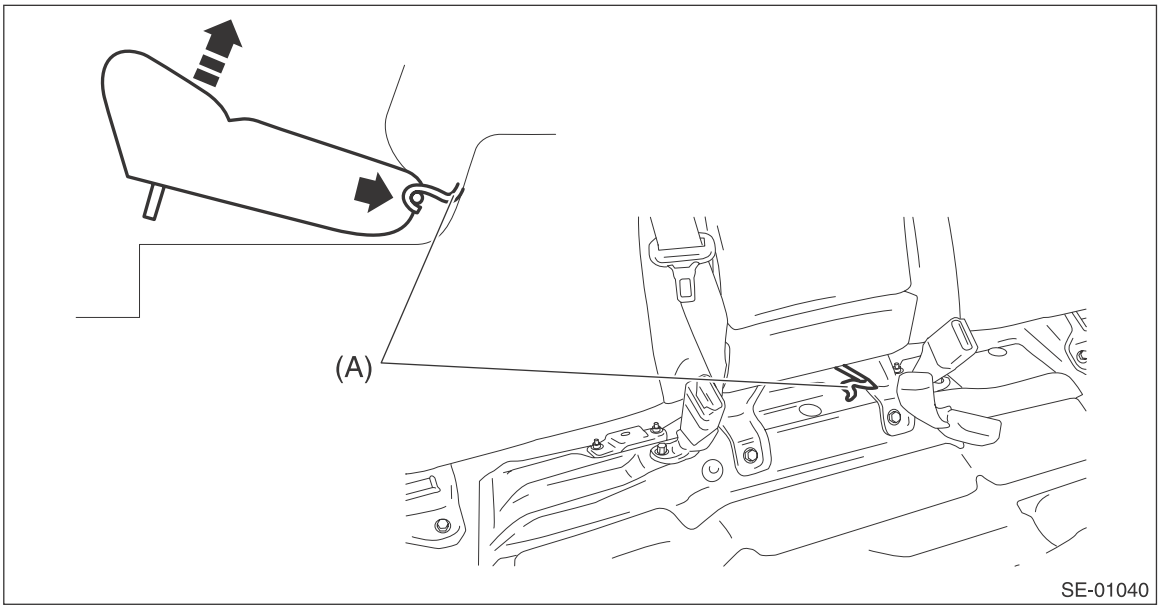

3) Remove the center belt RH assembly & LH assembly.
(1) Remove the bolts and remove the ISO-FIX anchor.
(2) Remove the bolts, then remove the center belt RH assembly & LH assembly.
• Sedan model

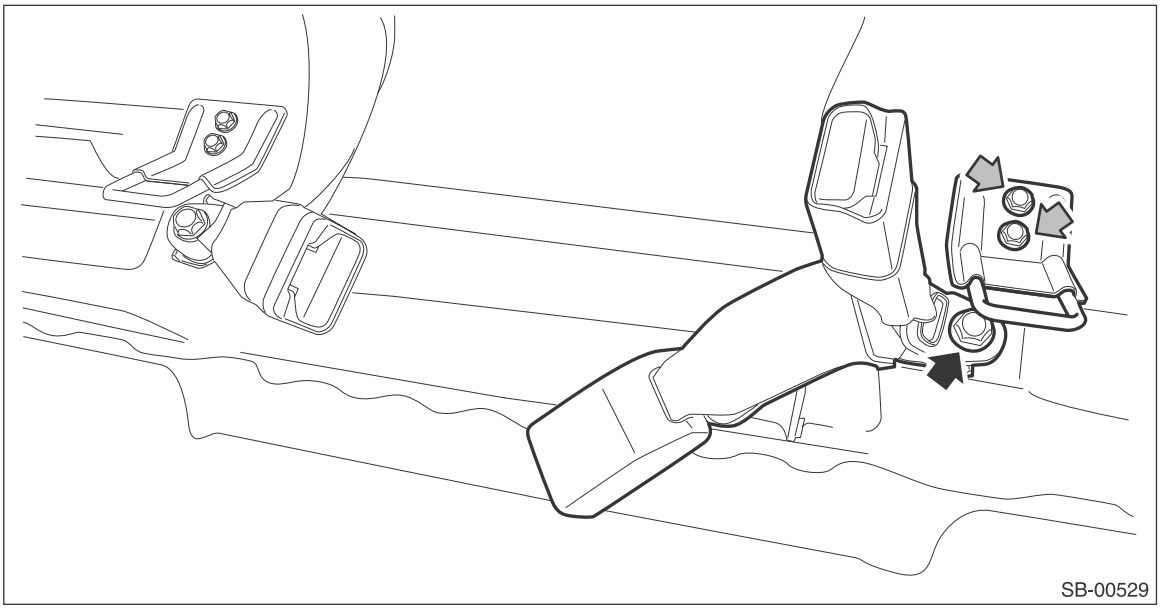

- OUTBACK model

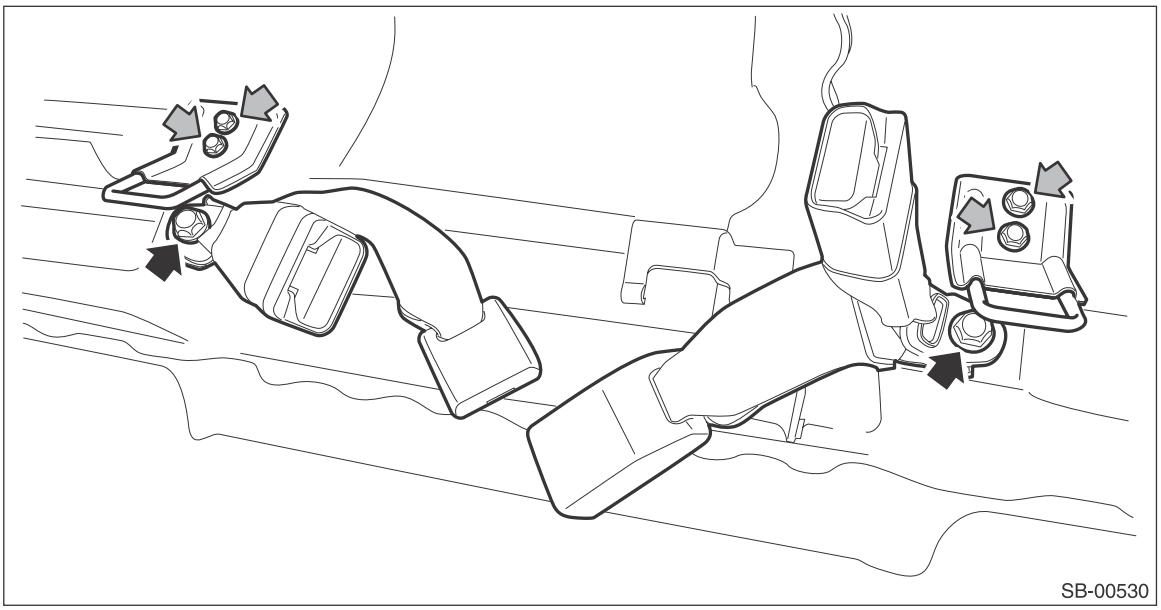

B: INSTALLATION

1. OUTER BELT RH ASSEMBLY & LH ASSEMBLY (SEDAN MODEL)

CAUTION:
If the hook is removed from vehicle body, replace the hook with the new part to avoid the deterioration of seat securing.

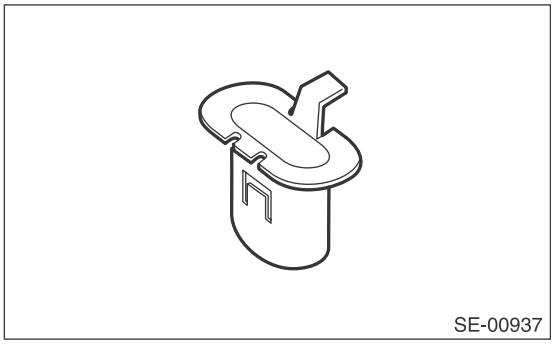

1) Install the outer belt assembly.

CAUTION:
- **During installation, make sure that the seat belts are not twisted.**
- **After installation, make sure that the seat belts are smoothly extended and wound.**

Tightening torque:
REAR SEAT BELT (SEDAN MODEL): <Ref. to SB-3, REAR SEAT BELT (SEDAN MODEL), COMPONENT, General Description.>

2) Install the remaining parts in the reverse order of removal.
3) After installation, check the following points.
- The seat belt is not twisted.
- The seat belt can be pulled out and retracted smoothly.

2. OUTER BELT RH ASSEMBLY & LH ASSEMBLY (OUTBACK MODEL)

CAUTION:
If the hook is removed from vehicle body, replace the hook with the new part to avoid the deterioration of seat securing.

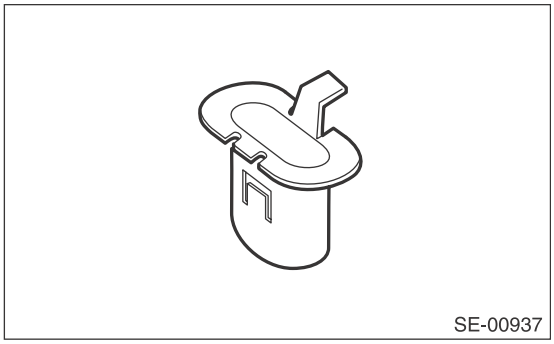

1) Install the outer seat belt retractor.

Tightening torque:
Rear seat belt (OUTBACK model): <Ref. to SB-4, REAR SEAT BELT (OUTBACK MODEL), COMPONENT, General Description.>
2) Install the rear quarter trim UPR.
3) Install the outer belt shoulder anchor.
4) Install the outer belt lower anchor.

CAUTION:
- **During installation, make sure that the seat belts are not twisted.**
- **After installation, make sure that the seat belts are smoothly extended and wound.**

Tightening torque:
Rear seat belt (OUTBACK model): <Ref. to SB-4, REAR SEAT BELT (OUTBACK MODEL), COMPONENT, General Description.>
5) Install the remaining parts in the reverse order of removal.
6) After installation, check the following points.
- The seat belt is not twisted.
- The seat belt can be pulled out and retracted smoothly.

3. SHOULDER BELT CTR ASSEMBLY (SEDAN MODEL)

CAUTION:
If the hook is removed from vehicle body, replace the hook with the new part to avoid the deterioration of seat securing.

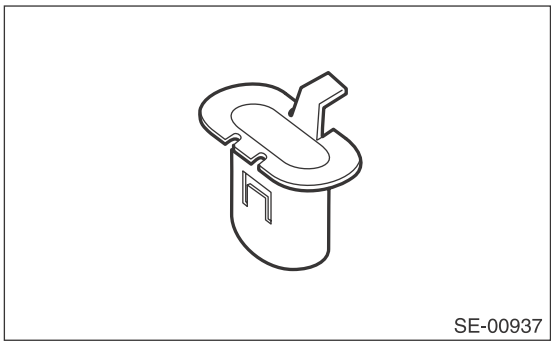

1) Install the shoulder belt retractor.

Tightening torque:
REAR SEAT BELT (SEDAN MODEL): <Ref. to SB-3, REAR SEAT BELT (SEDAN MODEL), COMPONENT, General Description.>
2) Install the rear shelf trim.

3) Install the shoulder belt lower anchor.

CAUTION:
- **During installation, make sure that the seat belts are not twisted.**
- **After installation, make sure that the seat belts are smoothly extended and wound.**

Tightening torque:
REAR SEAT BELT (SEDAN MODEL): <Ref. to SB-3, REAR SEAT BELT (SEDAN MODEL), COMPONENT, General Description.>

4) Rear quarter upper trim
5) Install the remaining parts in the reverse order of removal.
6) After installation, check the following points.
- The seat belt is not twisted.
- The seat belt can be pulled out and retracted smoothly.

4. SHOULDER BELT CTR ASSEMBLY (OUTBACK MODEL)

CAUTION:
If the hook is removed from vehicle body, replace the hook with the new part to avoid the deterioration of seat securing.

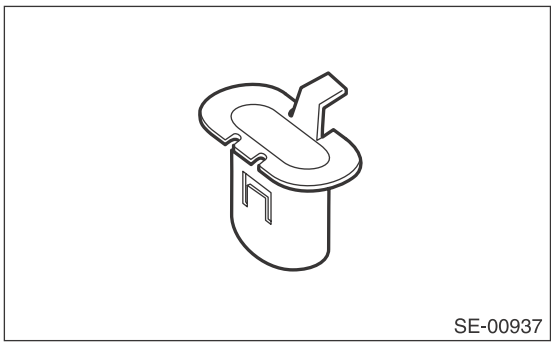
SE-00937

1) Install the shoulder belt retractor.

Tightening torque:
Rear seat belt (OUTBACK model): <Ref. to SB-4, REAR SEAT BELT (OUTBACK MODEL), COMPONENT, General Description.>

2) Install the roof trim.
3) Install the remaining parts in the reverse order of removal.

CAUTION:
• Do not reuse the tether clips on the upper part of the front pillar trim. Always replace with a new part.
Once the tether clip is removed from the pillar trim, the retention power deteriorates and the front pillar trim may come off.
• Do not reuse the clips on the upper part of the center pillar trim. Once the clip is removed, its holding force is reduced. Be sure to replace it with a new clip.
• Before installing the front pillar trim, check the condition of (white) protective unwoven cloth of curtain airbag. If it is damaged (airbag module cloth is exposed), replace the curtain airbag module assembly with a new part.

4) After installation, check the following points.
- The seat belt is not twisted.
- The seat belt can be pulled out and retracted smoothly.

5. CENTER BELT ASSEMBLY RH & LH

1) Install the center belt assembly.

Tightening torque:
REAR SEAT BELT (SEDAN MODEL): <Ref. to SB-3, REAR SEAT BELT (SEDAN MODEL), COMPONENT, General Description.>
Rear seat belt (OUTBACK model): <Ref. to SB-4, REAR SEAT BELT (OUTBACK MODEL), COMPONENT, General Description.>

2) Install the ISO-FIX anchor.

Tightening torque:
25 N·m (2.55 kgf-m, 18.4 ft-lb)

3) Install the rear seat cushion.

CAUTION:
If the hook is removed from vehicle body, replace the hook with the new part to avoid the deterioration of seat securing.

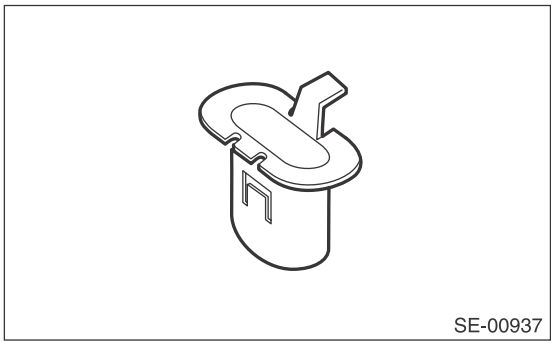
SE-00937

4) Install the remaining parts in the reverse order of removal.
5) After installation, check the following points.
- The seat belt is not twisted.
- Check that the airbag warning light lights up for approximately 6 seconds and then turns off when connecting the battery ground cable and turning the ignition switch to ON.

C: INSPECTION

1. VISUAL INSPECTION

Check for the following, and replace with new parts if necessary.
- Seat belt is slackened, bent or worn.
- Seat belt is abnormally wound or extended.
- Inner belt ASSY is deformed or damaged.
- Seat belt buckle cannot be engaged properly.

2. ELR LOCK MECHANISM INSPECTION

1) Hold the retractor upright (as installed in the vehicle) and check the ELR lock mechanism.
2) Tilt the retractor from the upright posture and check the following points.
- It does not lock if the inclination angle is 12° or less.

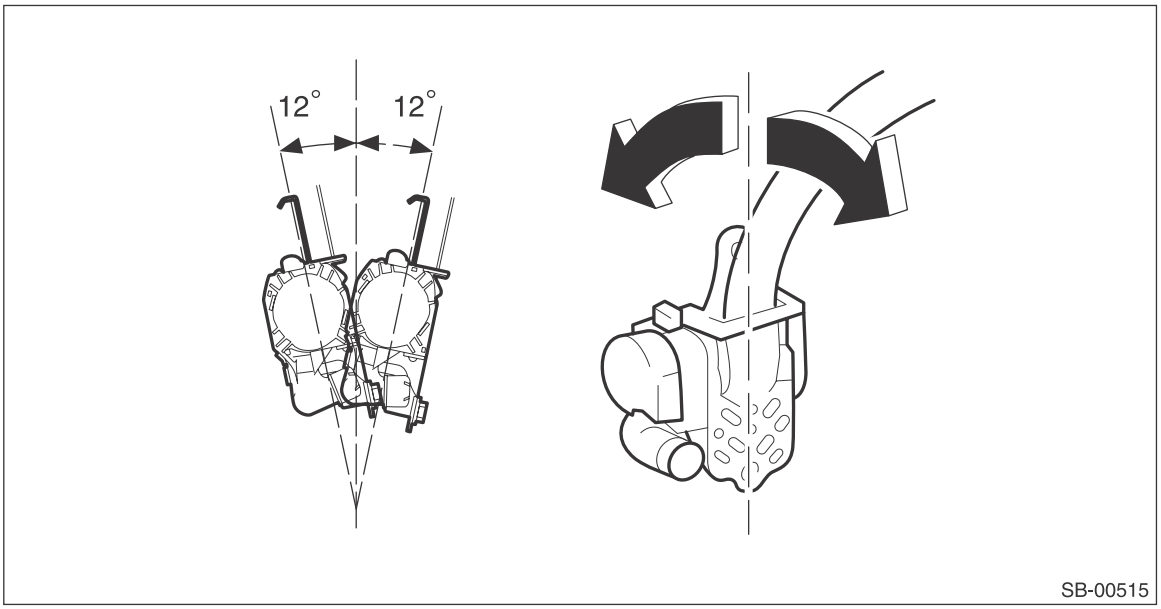

- It remains locked if the inclination angle is 27° or more.

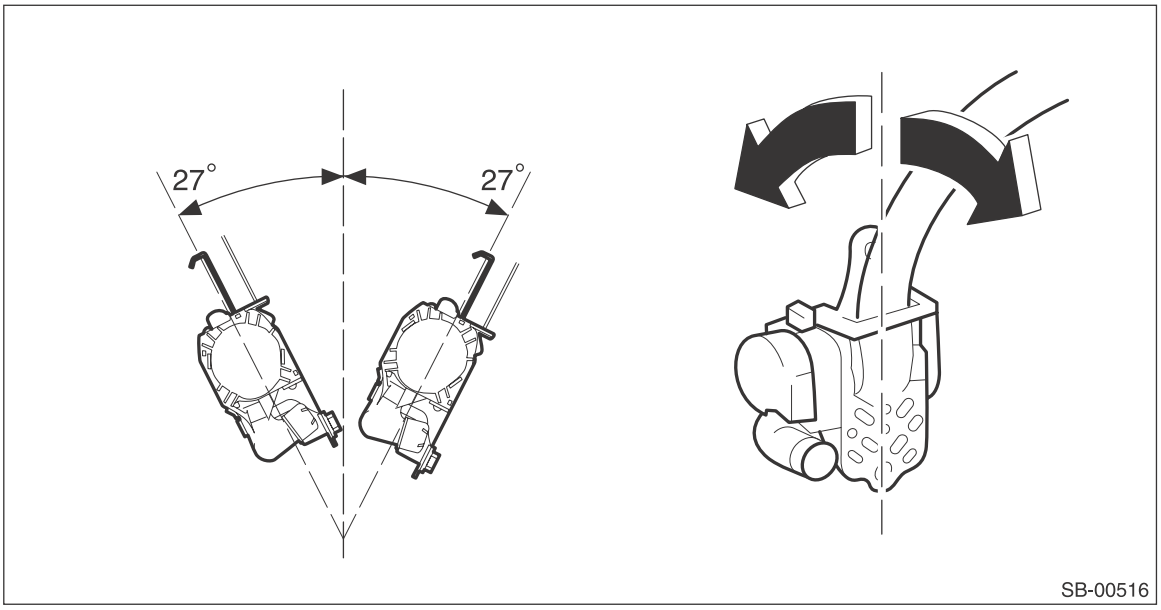

3) If the ELR lock mechanism does not operate correctly, replace the outer belt assembly with a new part.

LIGHTING SYSTEM

LI

		Page
1.	General Description	2
2.	Relay and Fuse	3
3.	Headlight System	5
4.	Day Time Running Light System	7
5.	Clearance Light and Illumination Light System	8
6.	Front Fog Light System	9
7.	Turn Signal Light and Hazard Light System	10
8.	Back-up Light System	13
9.	Stop Light System	15
10.	Interior Light System	16
11.	Combination Switch (Light)	19
12.	Light Control Sensor	24
13.	Headlight Assembly	26
14.	Headlight Bulb	31
15.	Front Turn Signal Light Bulb	35
16.	Clearance/Parking Light Bulb	37
17.	Front Side Marker Light Bulb	38
18.	Front Fog Light Assembly	40
19.	Front Fog Light Bulb	43
20.	Side Turn Signal Light Assembly	44
21.	Rear Combination Light Assembly	45
22.	Tail/Stop Light Bulb	47
23.	Rear Turn Signal Light Bulb	51
24.	Rear Finisher Light Assembly	54
25.	Back-up Light Bulb	56
26.	License Plate Light	58
27.	High-mounted Stop Light	60
28.	Spot Map Light	62
29.	Room Light	64
30.	Luggage Room Light	66
31.	Trunk Room Light	68
32.	Glove Box Light	69
33.	Door Step Light	70
34.	Ignition Switch Illumination	71
35.	Day Time Running Resistor	74
36.	Reflex Reflector	75
37.	Door Switch	76

1. General Description

A: SPECIFICATION

Headlight		High beam	12 V — 60 W
		Low beam	12 V — 55 W
Front turn signal light			12 V — 21 W
Clearance/parking light			12 V — 5 W
Side marker light			12 V — 5 W
Front fog light			12 V — 55 W
Side turn signal light (C6 model)			12 V — 1.4 W (LED)
Rear combination light	Sedan	Tail/stop light	12 V — 5/21 W
		Turn signal light	12 V — 21 W
		Back-up light	12 V — 16 W
	OUT-BACK	Tail light	12 V — 5 W
		Stop light	12 V — 21 W
		Turn signal light	12 V — 21 W
Rear finisher light	Sedan	Tail light	12 V — 5 W
	OUT-BACK	Tail light	12 V — 5 W
		Back-up light	12 V — 16 W
License plate light			12 V — 5 W
High-mounted stop light	Sedan		12 V — 1 W (LED)
	OUTBACK		12 V — 2.1 W (LED)
Room light			12 V — 8 W
Spot map light			12 V — 8 W
Luggage room light			12 V — 5 W
Trunk room light			12 V — 5 W
Glove box light			12 V — 1.4 W
Door step light			12 V — 5 W

B: CAUTION

- Before removing or installing parts, always disconnect the battery ground cable from battery. When replacing the audio, control module and other parts provided with memory functions, record the memory contents before disconnecting the battery ground cable. Otherwise, the memory is cleared.
- Reassemble the parts in the reverse order of disassembly procedure unless otherwise indicated.
- Adjust parts to the given specifications.
- Connect the connectors securely when reassembling.
- After reassembly, make sure that the functional parts operate normally.
- The airbag system wiring harness is routed near electrical parts and switches. Color of the airbag system wiring harness and connector is yellow. Do not use electrical test equipment on these circuits.
- Be careful not to damage the airbag system wiring harness when servicing electrical parts and switches.

C: PREPARATION TOOL

1. GENERAL TOOL

TOOL NAME	REMARKS
Circuit tester	Used for measuring resistance and voltage.
TORX® T30	Used for removing/installing driver's airbag module.

2. Relay and Fuse

A: LOCATION

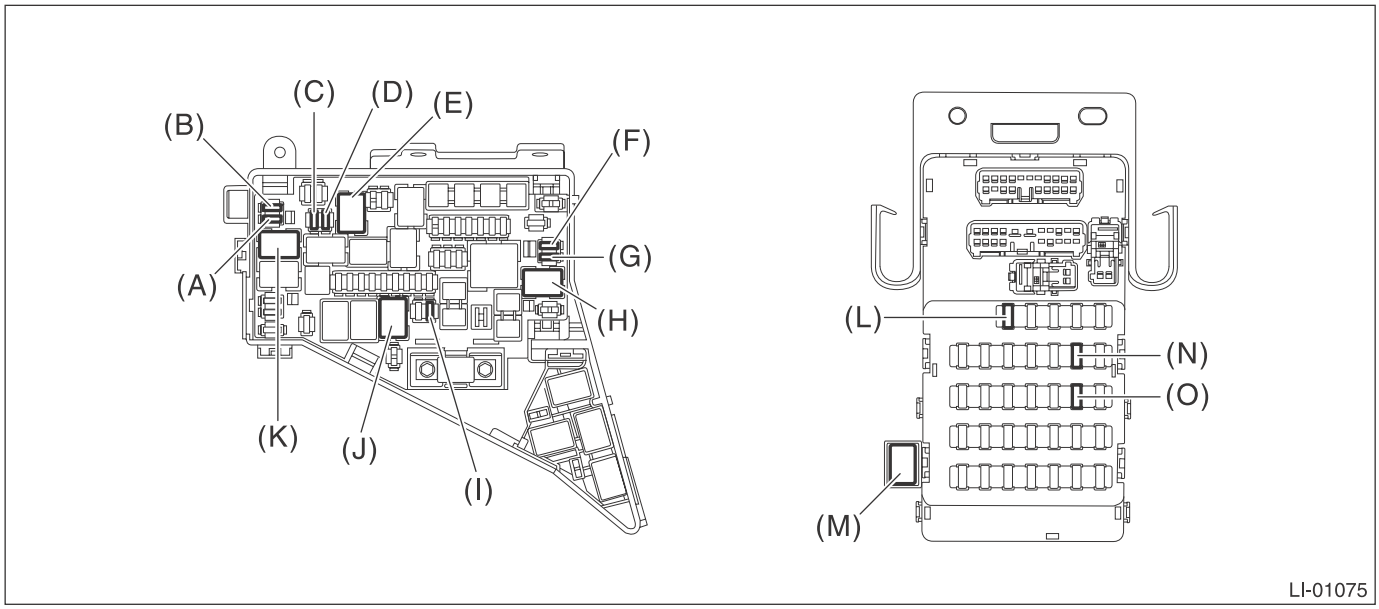

Main Fuse Box	Fuse 15A (front combination light RH)	(A)
	Fuse 15A (front combination light LH)	(B)
	Fuse 10A (front combination light LH)	(C)
	Fuse 10A (front combination light RH)	(D)
	Headlight relay (Hi)	(E)
	Fuse 10A (front fog light LH)	(F)
	Fuse 10A (front fog light RH)	(G)
	Front fog light relay	(H)
	Fuse 10 A (rear combination light)	(I)
	Tail and illumination relay	(J)
	Headlight relay (Lo)	(K)
Relay & fuse box	Fuse 15A (trailer connector)	(L)
	Back-up light relay	(M)
	Fuse 7.5A (turn signal & hazard unit)	(N)
	Fuse 7.5A (inhibitor switch, back-up light relay)	(O)

B: INSPECTION

1. CHECK FUSE.

1) Remove the fuse and check visually.
2) If the fuse is blown out, replace the fuse.

2. CHECK RELAY

1) Check the resistance between relay terminals.

Terminal No.	Inspection conditions	Specification	Circuit
1 — 2	Always	1 MΩ or more	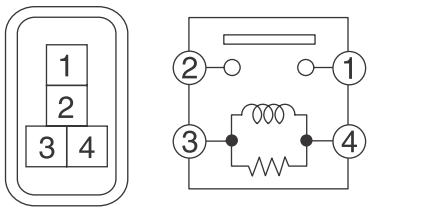 SR-00180
1 — 2	Apply battery voltage between 4 — 3 terminal.	Less than 1 Ω	

2) Replace the relay if it is found defective.

3. Headlight System

A: WIRING DIAGRAM

Refer to “Headlight System” in the WIRING DIAGRAM. <Ref. to WI-154, WIRING DIAGRAM, Headlight System.>

B: INSPECTION

1. AUTO HEADLIGHT SYSTEM CHECK

	Step	Check	Yes	No
1	**CHECK HEADLIGHT ILLUMINATION.** Set the lighting switch to the switch 1 (TAIL) and switch 2 (HEAD).	Do the tail and headlight illuminate?	Go to step **2**.	Check the combination switch (light) and headlight bulb.
2	**CHECK INPUT SIGNAL.** 1) Prepare the Subaru Select Monitor kit. 2) Turn the ignition switch to ON (engine OFF) and run the “PC application for Subaru Select Monitor”. 3) On «System Selection Menu» display, select {Integ. unit mode}. 4) Select the {Lighting AUTO input} from {Current Data Display & Save}.	Does the display switch between OFF ←→ ON when the lighting switch is moved to AUTO position?	Go to step **3**.	Go to step **7**.
3	**CHECK INPUT SIGNAL.** 1) From {Current Data Display & Save}, select {Illumination Sensor Output}. 2) Light up the darkness around light control sensor.	Is the value depending on the brightness output? (darkness: 47 — 53 Hz)	Check and replace the body integrated unit. • Inspection:<Ref. to BC(diag)-2, Basic Diagnostic Procedure.> • Replacement:<Ref. to SL-72, Body Integrated Unit.>	Go to step **4**.
4	**CHECK HARNESS.** 1) Disconnect the body integrated unit connector and light control sensor connector. 2) Check the continuity between body integrated unit connector and light control sensor connector. ***Connector & terminal*** ***(B280) No. 9 — (i194) No. 3:*** ***(B280) No. 19 — (i194) No. 4:*** ***(B280) No. 29 — (i194) No. 6:***	Is there continuity?	Go to step **5**.	Repair or replace the harness.
5	**CHECK BODY INTEGRATED UNIT.** 1) Connect the body integrated unit connector. 2) Turn the ignition switch to ON. 3) Measure the voltage between the body integrated unit. ***Connector & terminal*** ***(B280) No. 9 (+) — No. 29 (–):***	Is the voltage 10 V or more?	Go to step **6**.	Replace the body integrated unit. <Ref. to SL-72, Body Integrated Unit.>

Step		Check	Yes	No
6	**CHECK LIGHT CONTROL SENSOR.** 1) Connect the light control sensor connector. 2) Turn the ignition switch to ON. 3) Set the lighting switch to AUTO position. 4) Connect the Subaru Select Monitor, and read the waveform data between light control sensor connector. ***Connector & terminal*** ***(i194) No. 5 — No. 3:*** 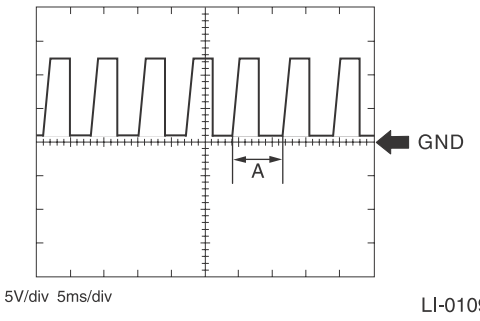 	Is waveform normal? (Interval of A becomes shorter as the surrounding becomes brighter.)	Go to step **7**.	Replace the light control sensor.
7	**CHECK COMBINATION SWITCH (LIGHT).** Check the combination switch (light). <Ref. to LI-23, INSPECTION, Combination Switch (Light).>	Is the combination switch (light) normal?	Go to step **8**.	Replace the combination switch (light).
8	**CHECK HARNESS.** 1) Disconnect the body integrated unit connector. 2) Check the continuity between body integrated unit connector and combination switch (light) connector. ***Connector & terminal*** ***(B71) No. 14 — (B281) No. 16:***	Is there continuity?	Check and replace the body integrated unit. • Inspection:<Ref. to BC(diag)-2, Basic Diagnostic Procedure.> • Replacement:<Ref. to SL-72, Body Integrated Unit.>	Repair or replace the harness.

2. CHECK LIGHTING SWITCH

Measure the resistance between lighting switch terminals. <Ref. to LI-23, INSPECTION, Combination Switch (Light).>

3. CHECK DIMMER & PASSING SWITCH

Measure the resistance between dimmer & passing switch terminals. <Ref. to LI-23, INSPECTION, Combination Switch (Light).>

C: NOTE

For operation procedures of each component of the headlight system, refer to the respective section.
- Headlight Assembly:<Ref. to LI-26, Headlight Assembly.>
- Headlight bulb:<Ref. to LI-31, Headlight Bulb.>
- Combination switch (light):<Ref. to LI-19, Combination Switch (Light).>
- Light control sensor:<Ref. to LI-24, Light Control Sensor.>

4. Day Time Running Light System

A: WIRING DIAGRAM

Refer to “Headlight System” in the WIRING DIAGRAM. <Ref. to WI-154, WIRING DIAGRAM, Headlight System.>

B: INSPECTION

1. DAYTIME RUNNING LIGHT SYSTEM CHECK

	Step	Check	Yes	No
1	**CHECK DTC.** 1) Prepare the Subaru Select Monitor kit. 2) Turn the ignition switch to ON (engine OFF) and run the “PC application for Subaru Select Monitor”. 3) On «System Selection Menu» display, select {Integ. unit mode}. 4) Select the {Diagnostic Code(s) Display}.	Is DTC displayed?	Perform the diagnosis according to DTC.	Go to step **2**.
2	**CHECK INPUT SIGNAL.** 1) From the state in step 1), select {Integ. unit mode}. 2) Select the following input signals. (1) Parking Brake Switch Input (2) Shift Position (3) Lighting II Switch Input	Is the input signal normal?	Go to step **3**.	Check the defective part.
3	**CHECK RELAY.** Check the daytime running light relay.	Is the relay OK?	Go to step **4**.	Replace the relay.
4	**CHECK HARNESS.**	Is harness normal?	Replace the body integrated unit. <Ref. to SL-72, REMOVAL, Body Integrated Unit.>	Repair or replace the harness.

C: NOTE

For operation procedures of each component of the daytime running light system, refer to the respective section.

- Headlight Assembly:<Ref. to LI-74, Day Time Running Resistor.>
- Daytime running resistor:<Ref. to LI-74, Day Time Running Resistor.>

5. Clearance Light and Illumination Light System

A: WIRING DIAGRAM

Refer to “Clearance Light and Illumination Light System” in the WIRING DIAGRAM. <Ref. to WI-73, WIRING DIAGRAM, Clearance Light and Illumination Light System.>

B: INSPECTION

1. CHECK LIGHTING SWITCH

Measure the resistance between lighting switch terminals. <Ref. to LI-23, INSPECTION, Combination Switch (Light).>

C: NOTE

For operation procedures of each component of the clearance light & illumination light system, refer to the respective sections.

- Combination switch (light):<Ref. to LI-19, Combination Switch (Light).>
- Clearance light/parking light bulb:<Ref. to LI-37, Clearance/Parking Light Bulb.>
- License plate light:<Ref. to LI-58, License Plate Light.>
- Ignition switch illumination:<Ref. to LI-71, Ignition Switch Illumination.>

6. Front Fog Light System

A: WIRING DIAGRAM

Refer to “Front Fog Light System” in the WIRING DIAGRAM. <Ref. to WI-149, WIRING DIAGRAM, Front Fog Light System.>

B: INSPECTION

1. CHECK FRONT FOG LIGHT SWITCH

Measure the resistance between front fog light switch terminals. <Ref. to LI-23, INSPECTION, Combination Switch (Light).>

C: NOTE

For operation procedures of each component of the front fog light system, refer to the respective section.

- Combination switch (light):<Ref. to LI-19, Combination Switch (Light).>
- Front fog light assembly:<Ref. to LI-40, Front Fog Light Assembly.>
- Front fog light bulb:<Ref. to LI-43, Front Fog Light Bulb.>

7. Turn Signal Light and Hazard Light System

A: WIRING DIAGRAM

Refer to “Turn Signal and Hazard Light System” in the WIRING DIAGRAM. <Ref. to WI-221, WIRING DIAGRAM, Turn Signal Light and Hazard Light System.>

B: INSPECTION

1. CHECK TURN SIGNAL SWITCH

Measure the resistance between turn signal switch terminals. <Ref. to LI-23, INSPECTION, Combination Switch (Light).>

2. CHECK HAZARD SWITCH

1) Remove the A/C control panel.
- Manual A/C model:<Ref. to AC-42, MANUAL A/C MODEL, REMOVAL, Control Panel.>
- Auto A/C model:<Ref. to AC-39, AUTO A/C MODEL, REMOVAL, Control Panel.>

2) Measure the resistance between hazard switch terminals.

Preparation tool: Circuit tester
- AUTO A/C MODEL

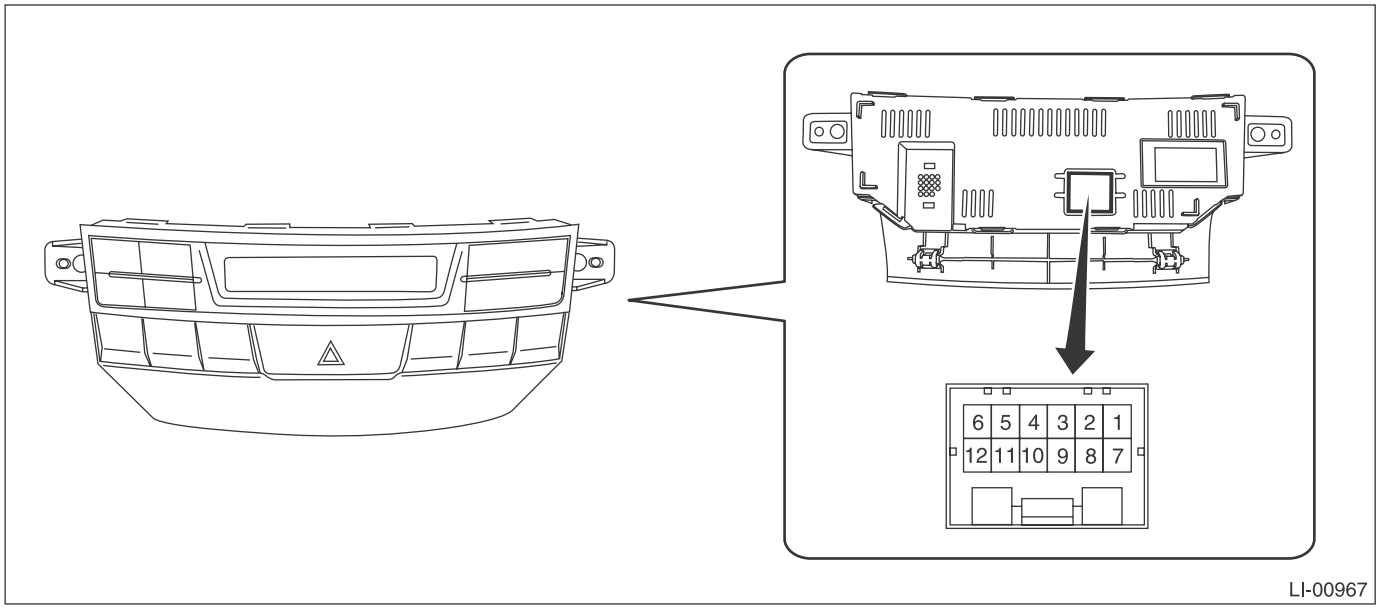

Terminal No.	Inspection conditions	Specification
1 — 2	Switch OFF	1 MΩ or more
	Switch ON	Less than 1 Ω

- MANUAL A/C MODEL

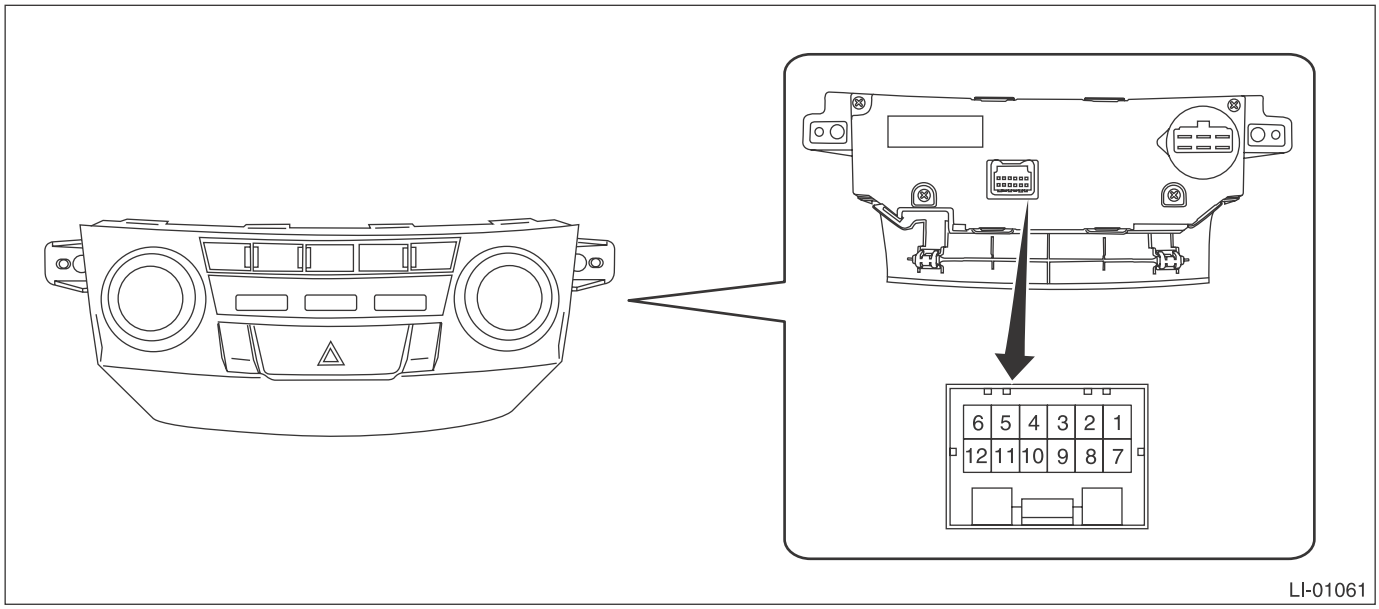

Terminal No.	Inspection conditions	Specification
4 — 5	Switch OFF	1 MΩ or more
	Switch ON	Less than 1 Ω

3) Replace the A/C control panel if the inspection result is not within the standard value.

3. CHECK TURN SIGNAL AND HAZARD MODULE

1) Measure the voltage between turn signal & hazard module connector and chassis ground.

Preparation tool: Circuit tester
Connector

Terminal No.	Input/Output	Inspection conditions	Standard
6 ←→ Chassis ground	Input	Turn signal switch (Right) OFF → ON	9 V or more → less than 1 V
5 ←→ Chassis ground	Input	Turn signal switch (Left) OFF → ON	9 V or more → less than 1 V
8 ←→ Chassis ground	Input	Hazard switch OFF → ON	9 V or more → less than 1 V
2 ←→ Chassis ground	Output	Turn signal switch (Right) OFF → ON	Repeat less than 1 V → less than 1 V ←→ 9 V or more at 60 to 120 times per minute.
3 ←→ Chassis ground	Output	Turn signal switch (Left) OFF → ON	Repeat less than 1 V → less than 1 V ←→ 9 V or more at 60 to 120 times per minute.
2 ←→ Chassis ground	Output	Hazard switch OFF → ON	Repeat less than 1 V → less than 1 V ←→ 9 V or more at 60 to 120 times per minute.
3 ←→ Chassis ground	Output	Hazard switch OFF → ON	Repeat less than 1 V → less than 1 V ←→ 9 V or more at 60 to 120 times per minute.

2) Replace the turn signal and hazard module if the inspection result is not within the standard value.

C: NOTE

For operation procedures of each component of the turn signal and hazard light system, refer to the respective sections.

- Combination switch (light):<Ref. to LI-19, Combination Switch (Light).>
- Front turn signal light bulb:<Ref. to LI-35, Front Turn Signal Light Bulb.>
- Side turn signal light assembly:<Ref. to LI-44, Side Turn Signal Light Assembly.>
- Rear combination light assembly:<Ref. to LI-45, Rear Combination Light Assembly.>
- Rear turn signal light bulb:<Ref. to LI-51, Rear Turn Signal Light Bulb.>

8. Back-up Light System

A: WIRING DIAGRAM

Refer to “Back-up Light System” in the WIRING DIAGRAM. <Ref. to WI-66, WIRING DIAGRAM, Back-up Light System.>

B: INSPECTION

1. CHECK BACK-UP LIGHT SWITCH (MT MODEL)

1) Disconnect the back-up light switch connector.
2) Measure the resistance between back-up light switch terminals.

Preparation tool: Circuit tester

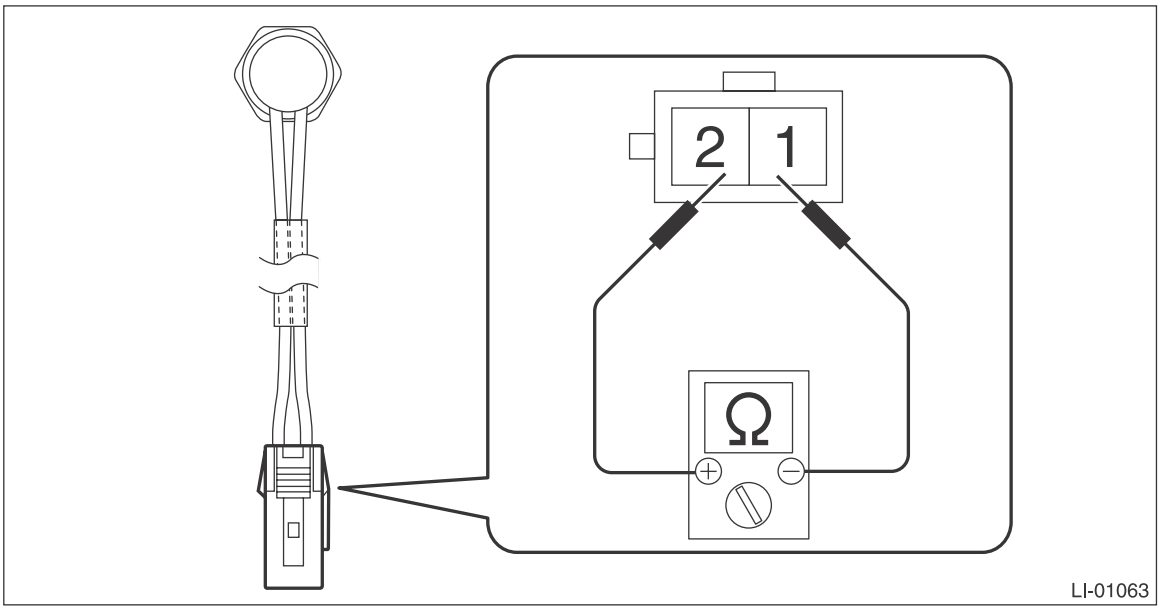

Terminal No.	Inspection conditions	Specification
1 — 2	When shift lever is set in reverse position	Less than 1 Ω
	Other positions	1 MΩ or more

3) Replace the back-up light switch if the inspection result is not within the standard value.

2. CHECK INHIBITOR SWITCH (CVT MODEL)

1) Disconnect the inhibitor switch connector.
2) Measure the resistance between inhibitor switch terminals.

Preparation tool: Circuit tester

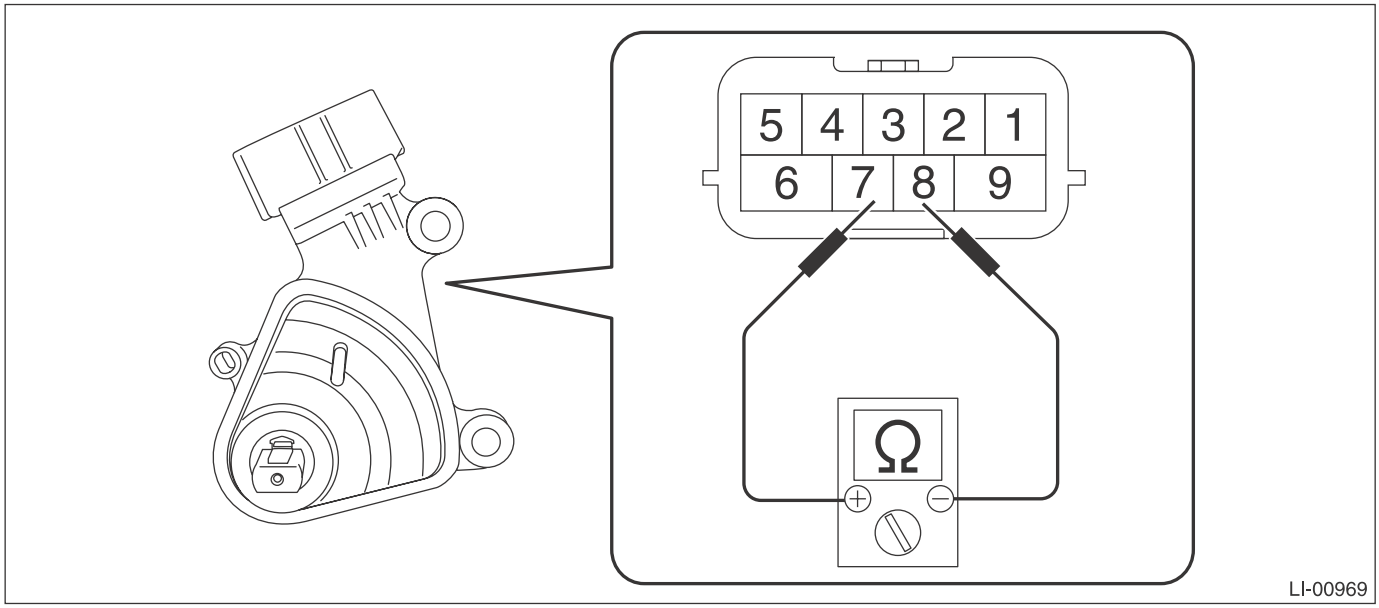

Terminal No.	Inspection conditions	Specification
7 — 8	When the selector lever is in the "R" range	Less than 1 Ω
	Other positions	1 MΩ or more

3) Replace the inhibitor switch if the inspection result is not within the standard value.

C: NOTE

For operation procedures of each component of the back-up light system, refer to the respective section.
- Rear combination light assembly:<Ref. to LI-45, Rear Combination Light Assembly.>
- Rear finisher light assembly:<Ref. to LI-54, Rear Finisher Light Assembly.>
- Back-up light bulb:<Ref. to LI-56, Back-up Light Bulb.>

9. Stop Light System

A: WIRING DIAGRAM

Refer to “Stop Light System” in the WIRING DIAGRAM. <Ref. to WI-216, WIRING DIAGRAM, Stop Light System.>

B: INSPECTION

1. CHECK STOP LIGHT SWITCH

1) Disconnect the stop light switch connector.
2) Measure the resistance between stop light switch terminals.

Preparation tool: Circuit tester

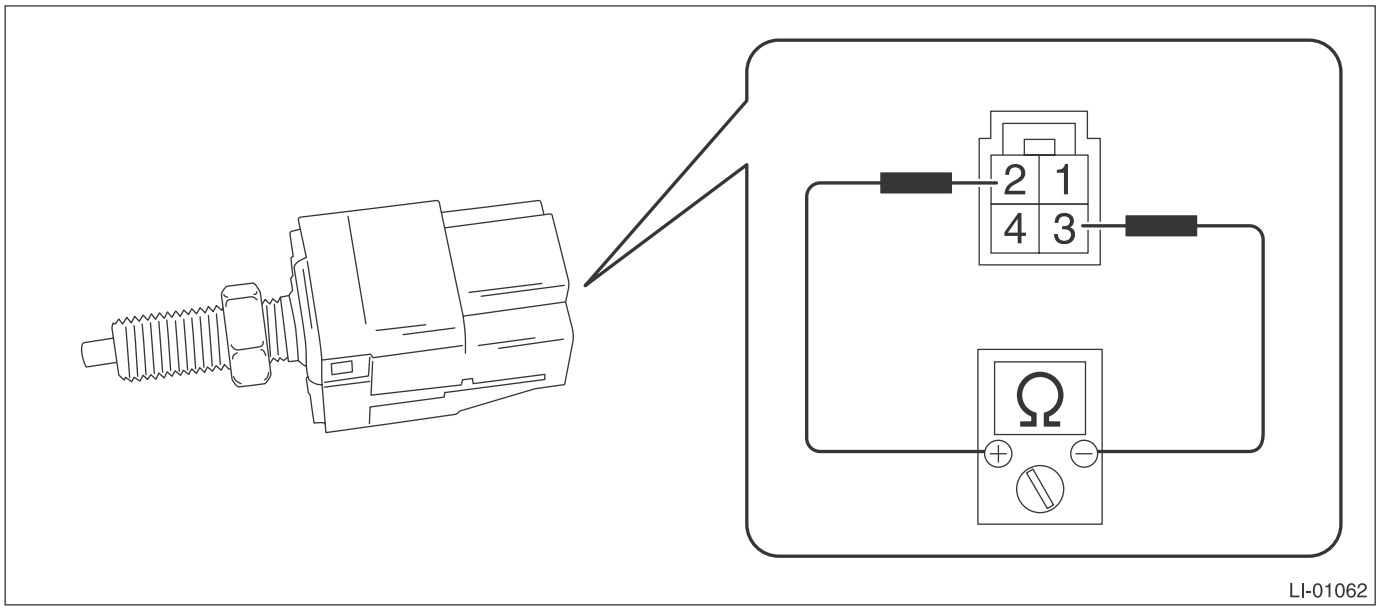

Terminal No.	Inspection conditions	Specification
2 — 3	When brake pedal is depressed	Less than 1 Ω
	When brake pedal is released	1 MΩ or more

3) Replace the stop light switch if the inspection result is not within the standard value.

C: NOTE

For operation procedures of each component of the stop light system, refer to the respective section.

- Rear combination light assembly:<Ref. to LI-45, Rear Combination Light Assembly.>
- Rear finisher light assembly:<Ref. to LI-54, Rear Finisher Light Assembly.>
- Tail light/stop light bulb:<Ref. to LI-47, Tail/Stop Light Bulb.>
- High-mounted stop light:<Ref. to LI-60, High-mounted Stop Light.>

10.Interior Light System

A: WIRING DIAGRAM

Refer to “Interior Light System” in the WIRING DIAGRAM. <Ref. to WI-159, WIRING DIAGRAM, Interior Light System.>

B: INSPECTION

1. CHECK DOOR SWITCH.

1) Remove the door switch.
2) Measure the resistance between door switch terminals.

Preparation tool: Circuit tester

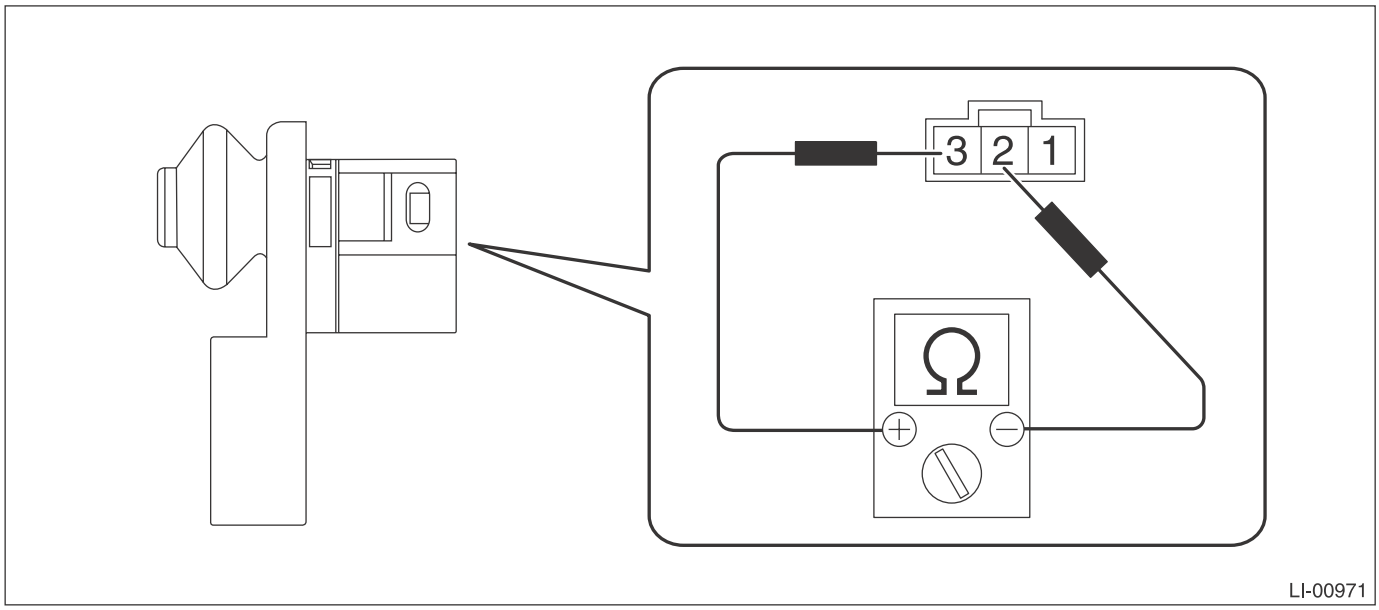

Terminal No.	Inspection conditions	Specification
2 — 3	When door is opened	Less than 1 Ω
	When door is closed	1 MΩ or more

3) Replace the door switch if the inspection result is not within the standard value.

2. CHECK REAR GATE LATCH SWITCH

1) Disconnect the rear gate latch switch connector.
2) Measure the resistance between rear gate latch switch terminals.

Preparation tool: Circuit tester

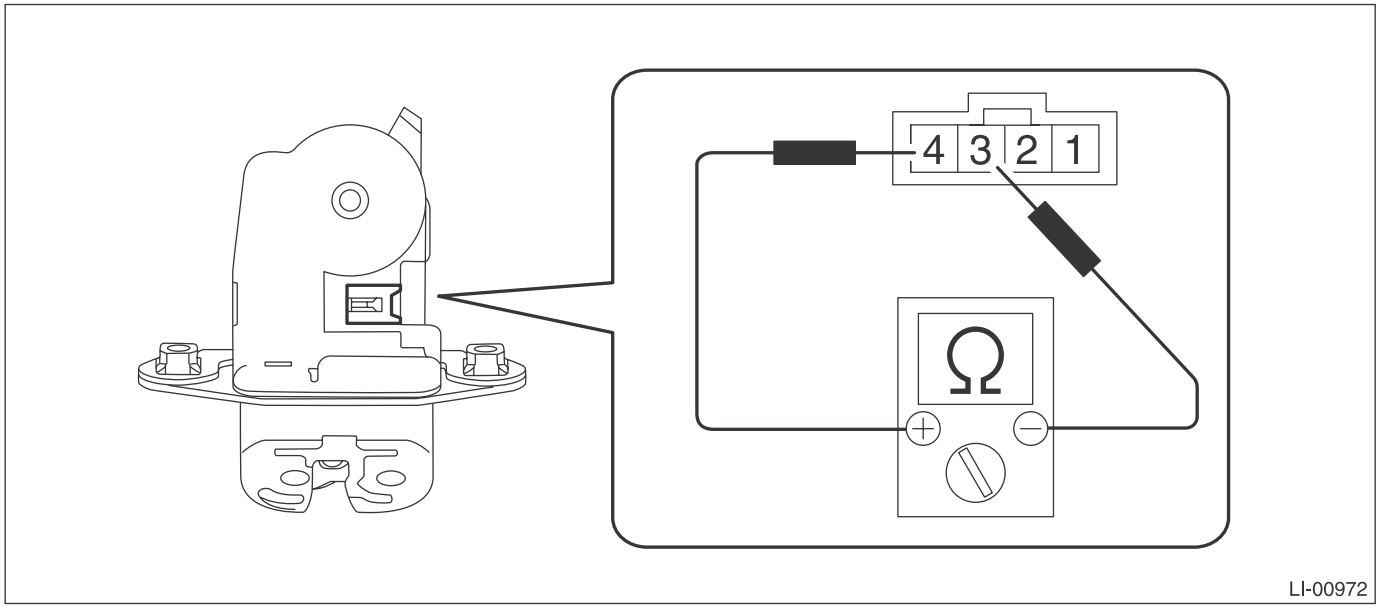

Terminal No.	Inspection conditions	Specification
3 — 4	When rear gate is opened	Less than 1 Ω
	When rear gate is closed	1 MΩ or more

3) If the inspection result is not within the standard value, replace the rear gate latch and actuator assembly.

3. CHECK TRUNK LID SWITCH

1) Disconnect the trunk lid switch connector.
2) Measure the resistance between trunk lid switch terminals.

Preparation tool: Circuit tester

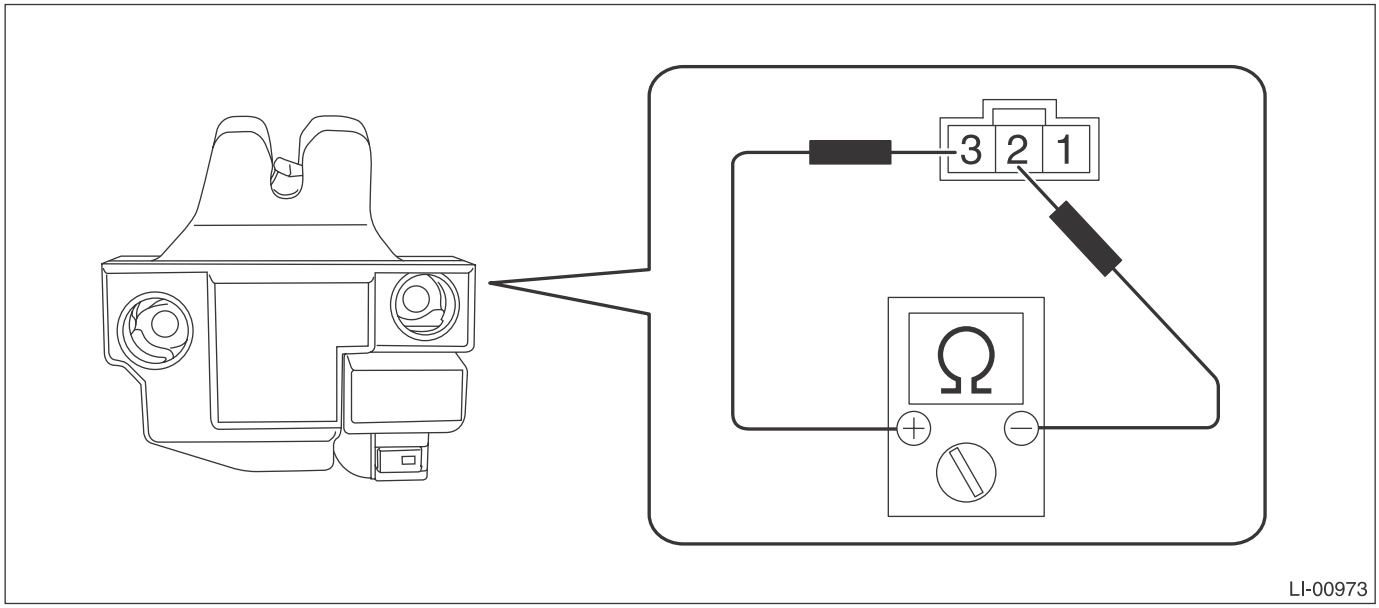

Terminal No.	Inspection conditions	Specification
2 — 3	When trunk lid is opened	Less than 1 Ω
	When trunk lid is closed	1 MΩ or more

3) If the inspection result is not within the standard value, replace the trunk lid latch and actuator assembly.

C: NOTE

For operation procedures of each component of the interior light system, refer to the respective section.

- Spot map light:<Ref. to LI-62, Spot Map Light.>
- Room light:<Ref. to LI-64, Room Light.>
- Luggage room light:<Ref. to LI-66, Luggage Room Light.>
- Trunk room light:<Ref. to LI-68, Trunk Room Light.>
- Glove box light:<Ref. to LI-69, Glove Box Light.>
- Door step light:<Ref. to LI-70, Door Step Light.>
- Door switch:<Ref. to LI-76, Door Switch.>

11.Combination Switch (Light)

A: REMOVAL

CAUTION:
Refer to “CAUTION” of “General Description” before handling the airbag module. <Ref. to AB-9, CAUTION, General Description.>

1) Set the front wheels in straight ahead position.
2) Turn the ignition switch to OFF.
3) Disconnect the ground cable from battery and wait for at least 60 seconds before starting work.
4) Remove the driver’s airbag module assembly.

Preparation tool: TORX® T30

(1) Loosen the TORX® bolts located on the sides of the steering wheel.

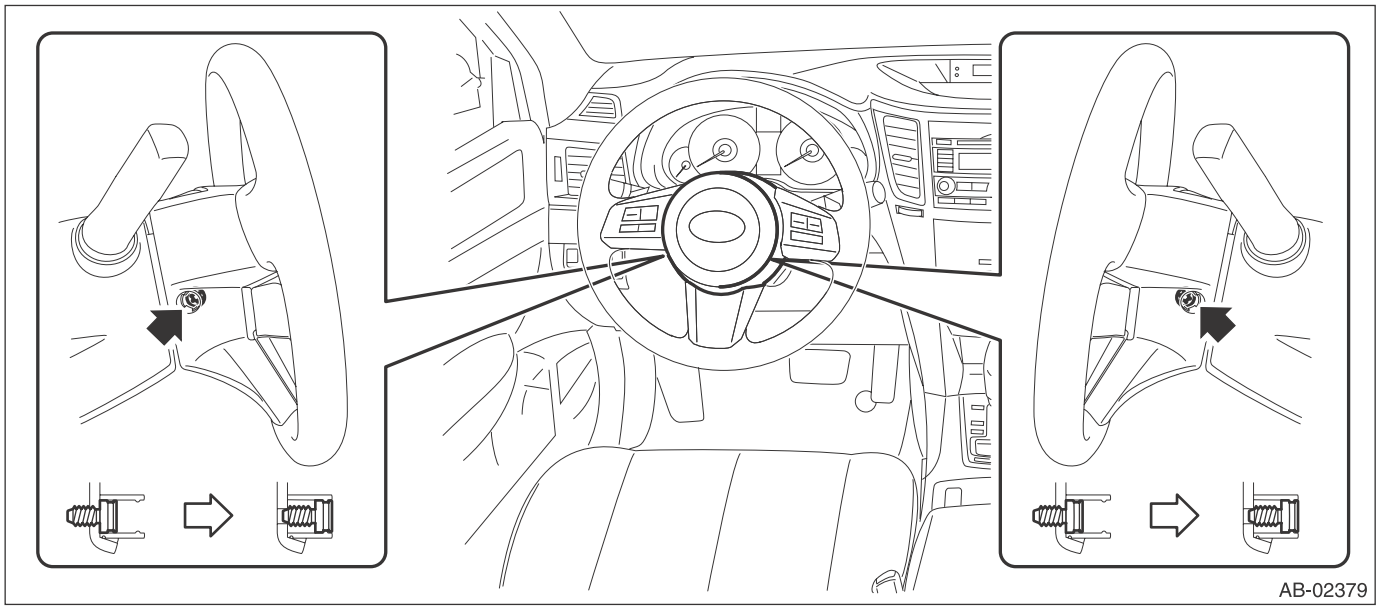

(2) Disconnect the horn harness and airbag connector and remove the airbag module assembly. <Ref. to AB-18, PROCEDURE, Airbag Connector.>

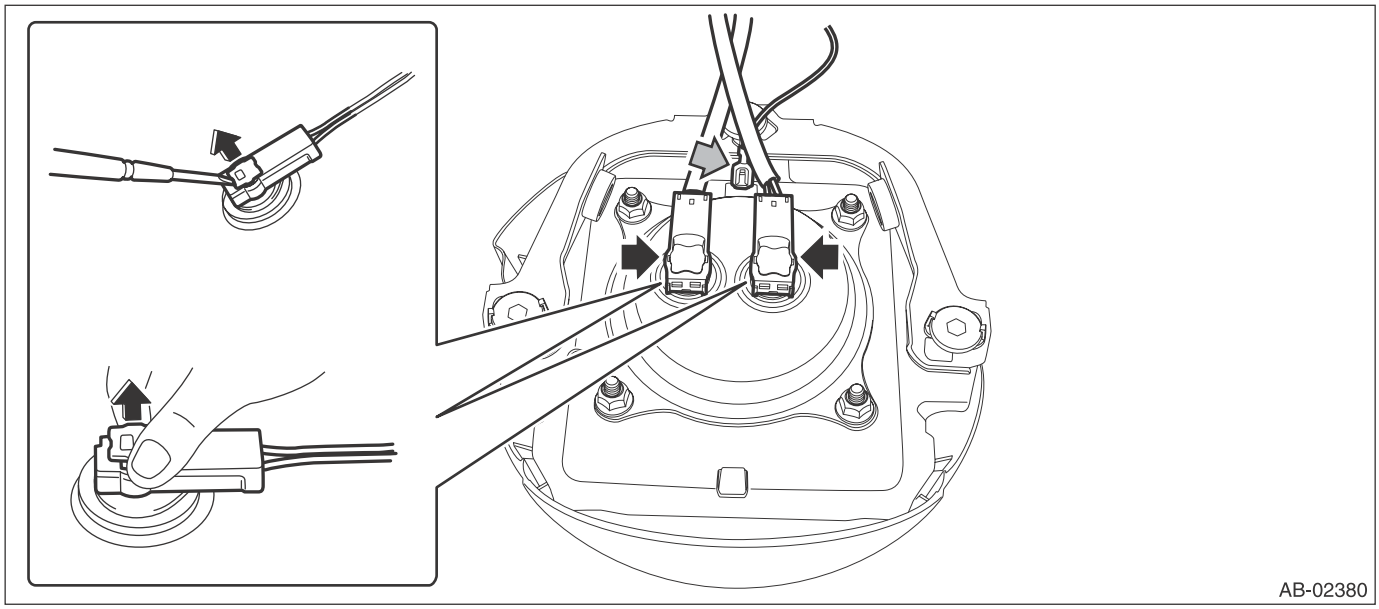

5) Remove the steering wheel.

CAUTION:
If the steering wheel has been removed, make sure that the roll connector is not turned from the original position.

(1) Disconnect the connector and remove the nut.
(2) Put alignment marks and remove the steering wheel using a steering puller.

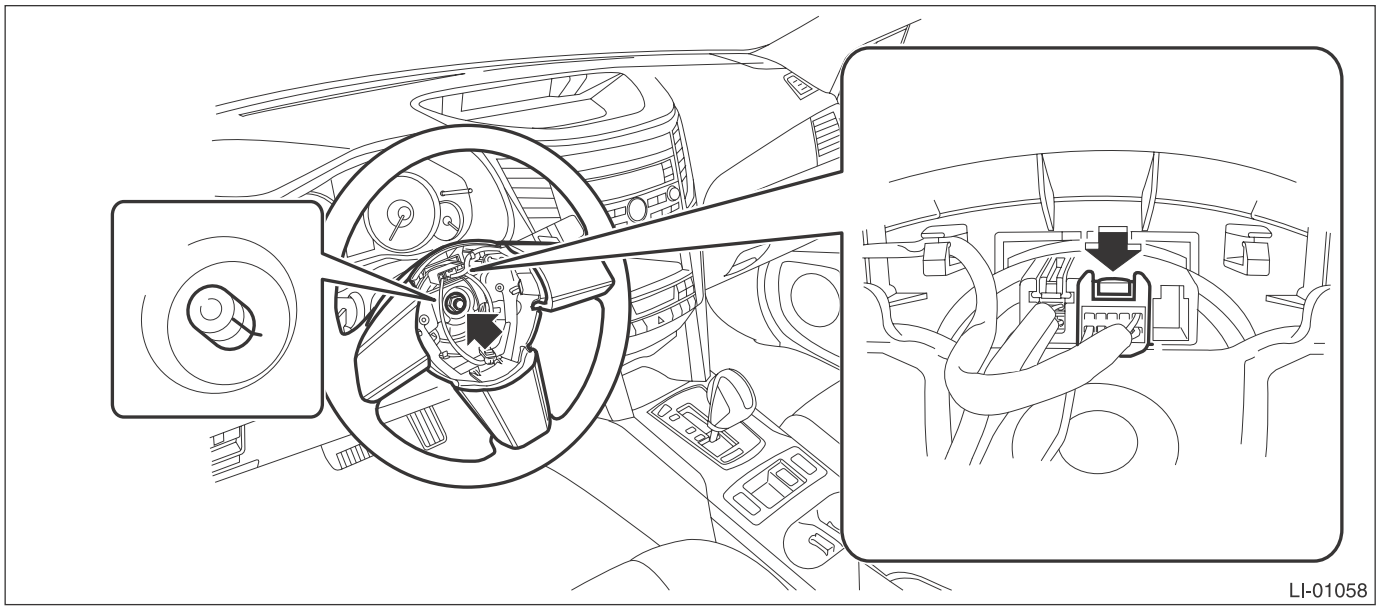

6) Remove the steering column cover.

(1) Lower the lever of the steering column.
(2) Release the claws and remove the screws, then detach the steering column lower cover.

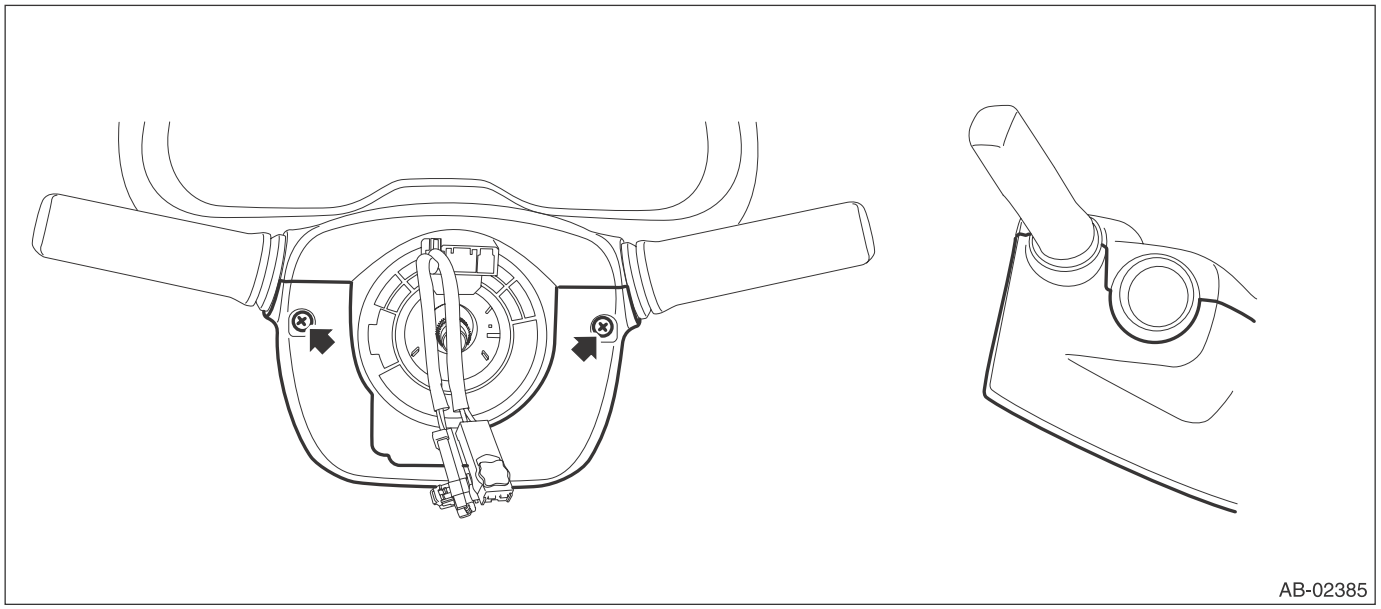

(3) Separate the steering column upper cover and steering upper cover, and remove the steering column upper cover.

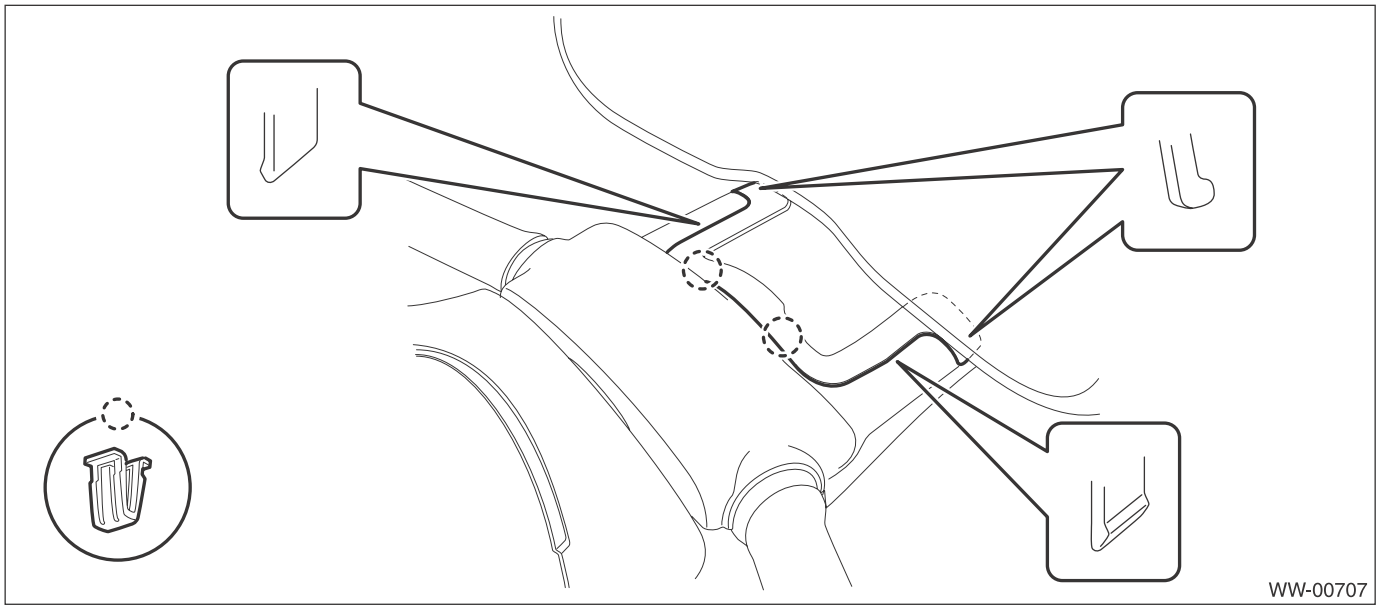

7) Remove the wiper switch assembly.
   (1) Disconnect the connector from the wiper switch.
   (2) Release the claws, and pull out the wiper switch assembly.

CAUTION:
Do not press the claws with excessive force. They may be damaged.

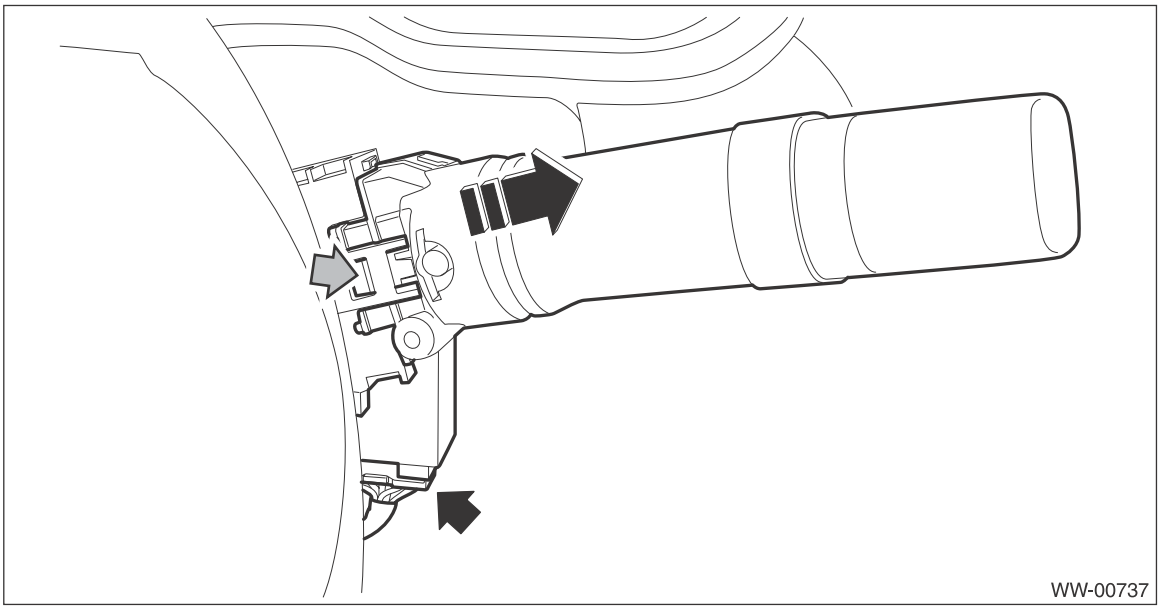

8) Remove the combination switch (light).
   (1) Disconnect the connector.

(2) Remove the screws and detach the combination switch (light).

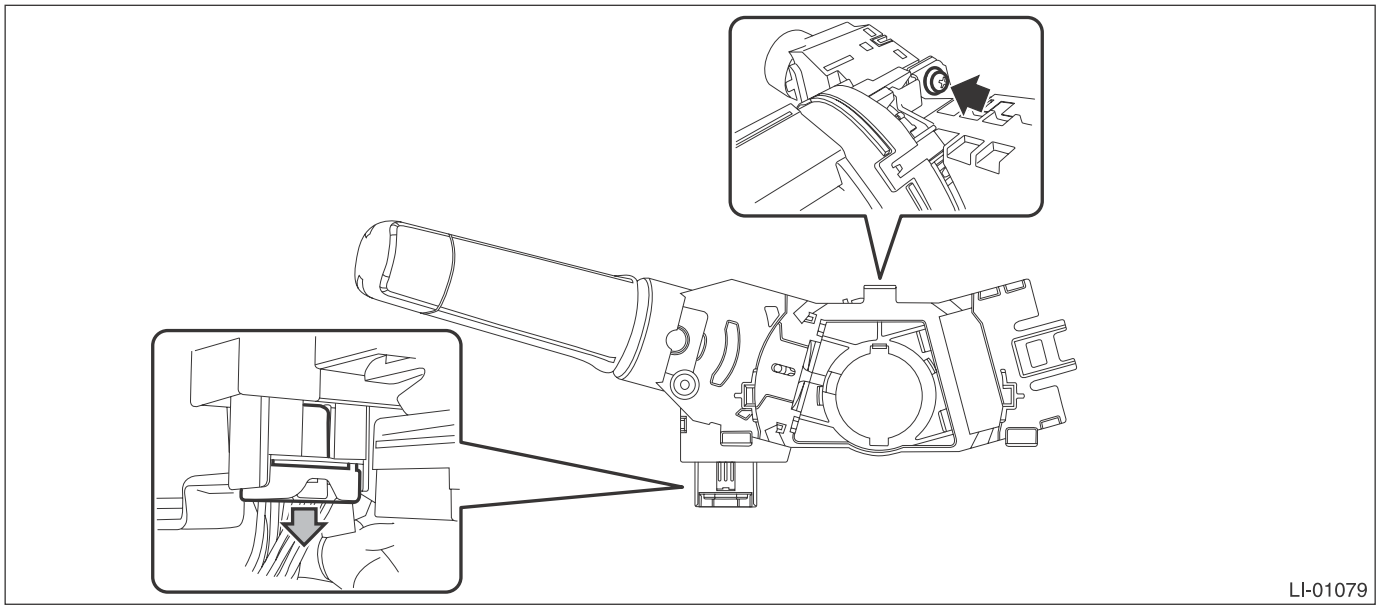

B: INSTALLATION

CAUTION:
• Refer to "CAUTION" of "General Description" before handling the airbag module. <Ref. to AB-9, CAUTION, General Description.>
• Do not allow harness and connectors to interfere or get tangled up with other parts.
1) Align the center position of the roll connector. <Ref. to AB-93, ADJUSTMENT, Roll Connector.>
2) Align the alignment marks on the steering wheel and steering shaft.
3) Install each part in the reverse order of removal.

Tightening torque:
Combination switch (light): 3.5 N·m (0.36 kgf-m, 2.6 ft-lb)
Driver's airbag module: 10 N·m (1.0 kgf-m, 7.4 ft-lb)
Steering wheel: 39 N·m (4.0 kgf-m, 28.8 ft-lb)
Clearance between column cover and steering wheel: 2 — 4 mm (0.08 — 0.16 in)

C: INSPECTION

1) Disconnect the combination switch (light) connector.
2) Measure the resistance between combination switch (light) connector terminals.

Preparation tool: Circuit tester

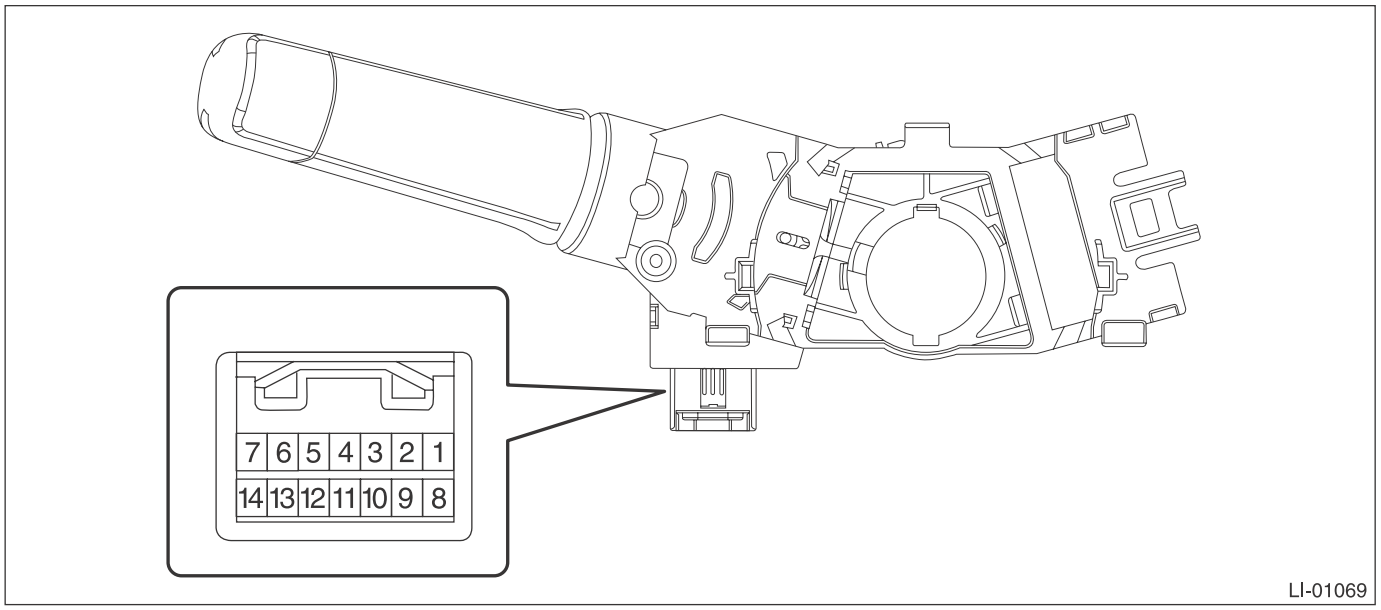

3) Replace the combination switch (light) if the inspection result is not within the standard value.

1. LIGHTING SWITCH

Terminal No.	Inspection Conditions	Specification
—	Switch OFF	1 MΩ or more
5 — 7	Switch 1 (TAIL)	Less than 1 Ω
6,5 — 7	Switch 2 (HEAD)	Less than 1 Ω
14 — 7	Switch AUTO	Less than 1 Ω

2. DIMMER & PASSING SWITCH

Terminal No.	Inspection Conditions	Specification
4,3 — 7	Switch PASS	Less than 1 Ω
4 — 7	Switch UP	Less than 1 Ω

3. TURN SIGNAL SWITCH

Terminal No.	Inspection Conditions	Specification
1 — 7	Switch TURN (RH)	Less than 1 Ω
2 — 7	Switch TURN (LH)	Less than 1 Ω

4. FRONT FOG LIGHT SWITCH

Terminal No.	Inspection Conditions	Specification
12 — 11	Switch OFF	1 MΩ or more
	Switch ON	Less than 1 Ω

12.Light Control Sensor

A: REMOVAL

NOTE:
The light control sensor is integrated with the sunload sensor.
1) Disconnect the ground cable from battery.
2) Remove the light control sensor.

CAUTION:
Be careful not to damage the sensors and interior trims when removing.

(1) Release the claws and clips, then detach the side speaker cover (RH).

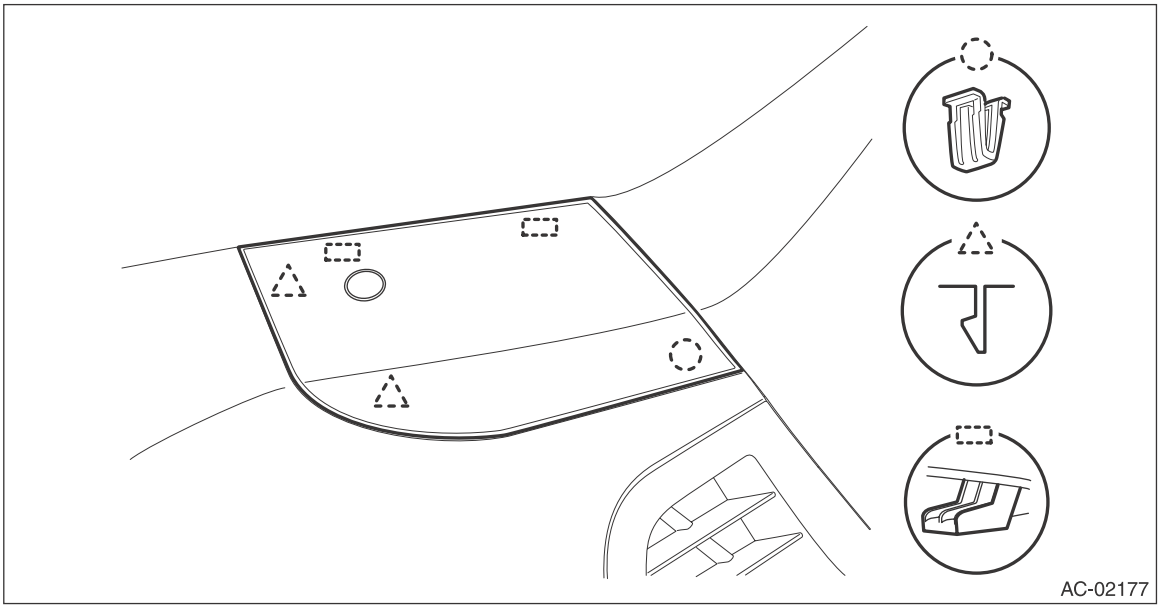

(2) Push out the light control sensor by pressing the left and right claws.
(3) Disconnect the connector, and remove the light control sensor.

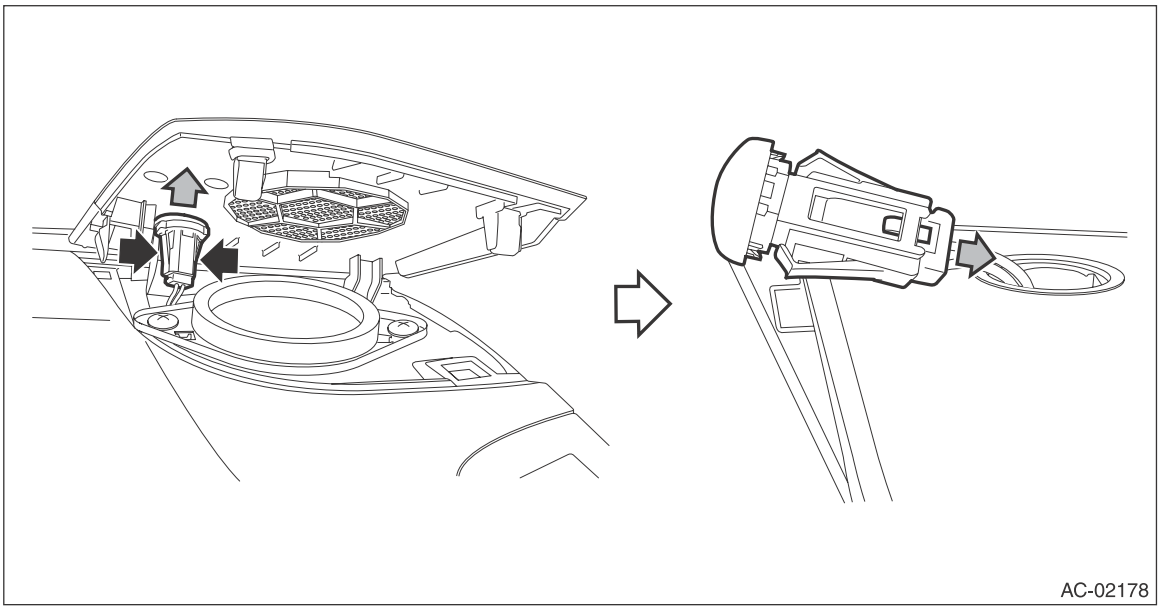

B: INSTALLATION

Install each part in the reverse order of removal.

C: INSPECTION

For the inspection of the light control sensor, refer to AUTO HEADLIGHT SYSTEM CHECK of Headlight System. <Ref. to LI-5, AUTO HEADLIGHT SYSTEM CHECK, INSPECTION, Headlight System.>

13.Headlight Assembly

A: REMOVAL

CAUTION:
Do not perform work with wet hands.

1) Disconnect the ground cable from battery.
2) Remove the clips and remove the air intake duct. (When removing the headlight RH).

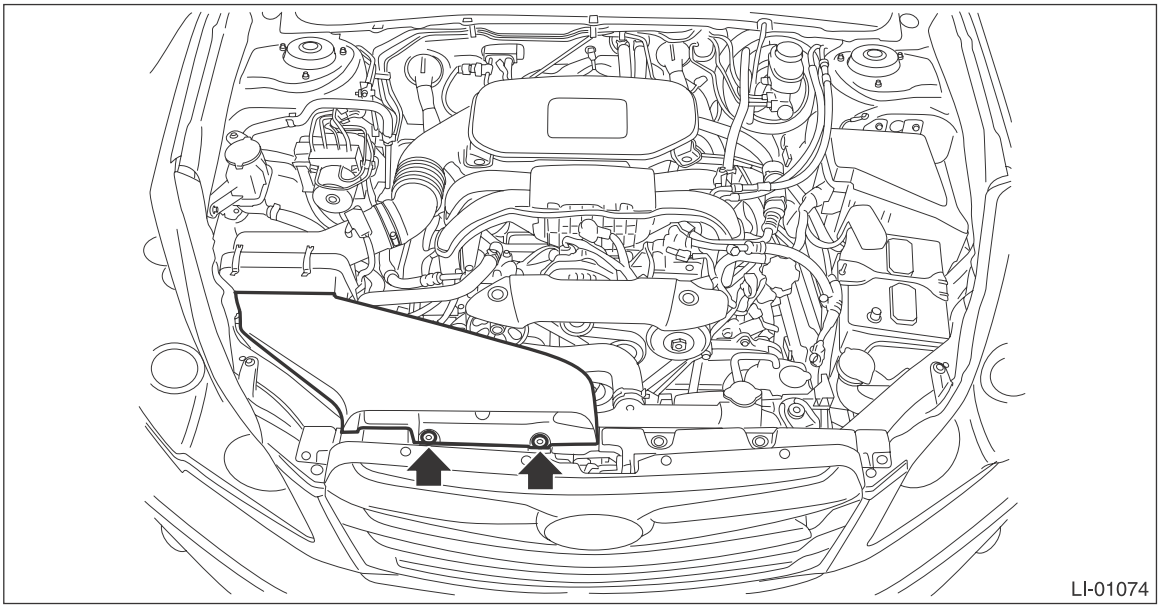

3) Remove the front bumper face assembly. <Ref. to EI-39, REMOVAL, Front Bumper.>
4) Remove the fender cover assembly UPR.
   (1) Remove the clip.
   (2) Release the claws of the fender cover assembly UPR by pulling it forward and remove the fender cover.

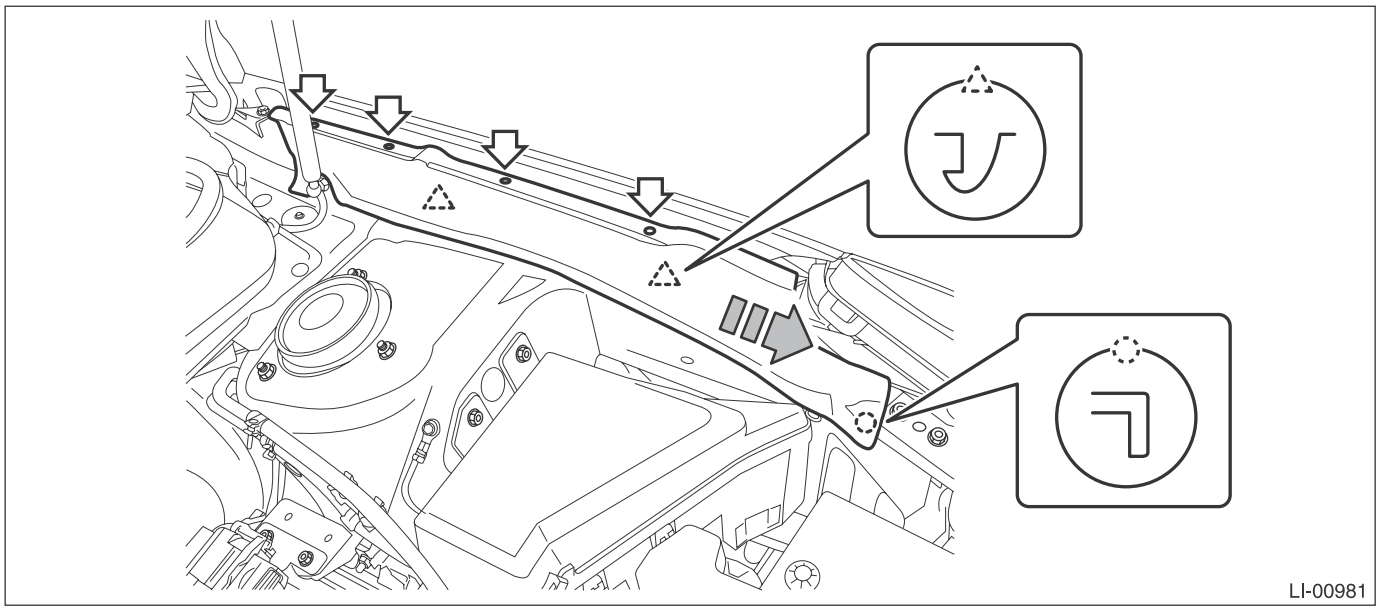

5) Remove the headlight assembly.

(1) Remove the bolts and clips, and pull out the headlight assembly to the front of the vehicle.

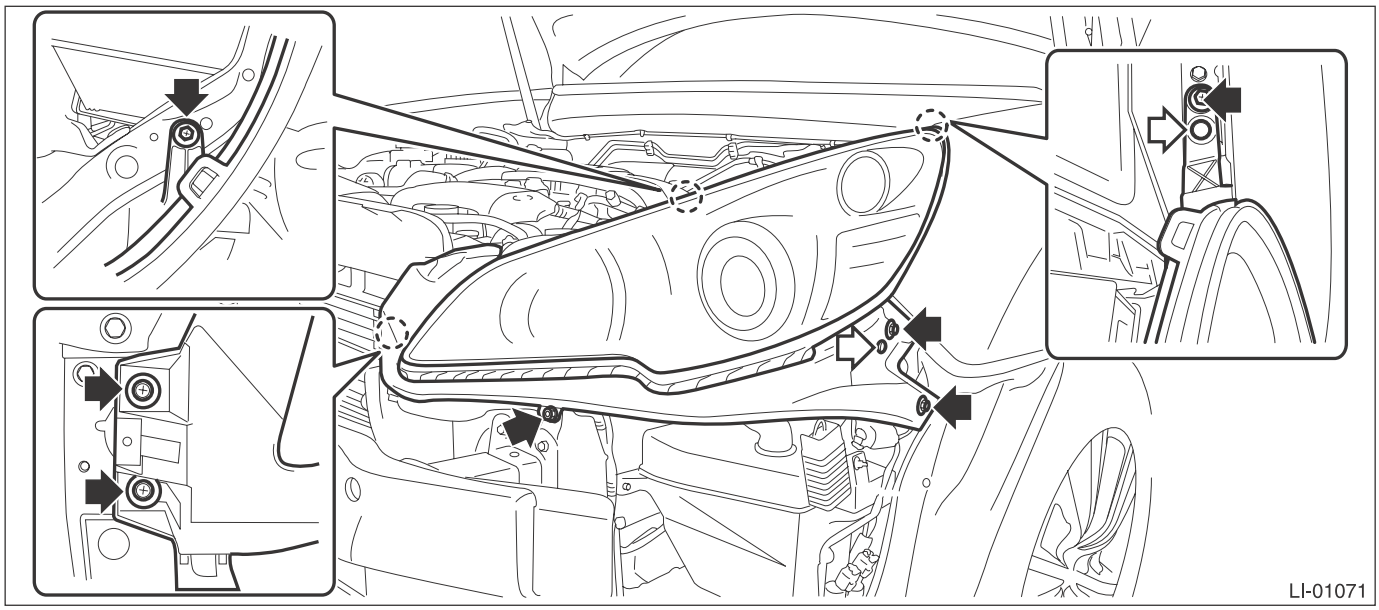

(2) Disconnect the connector and remove the headlight assembly.

- Headlight connector RH

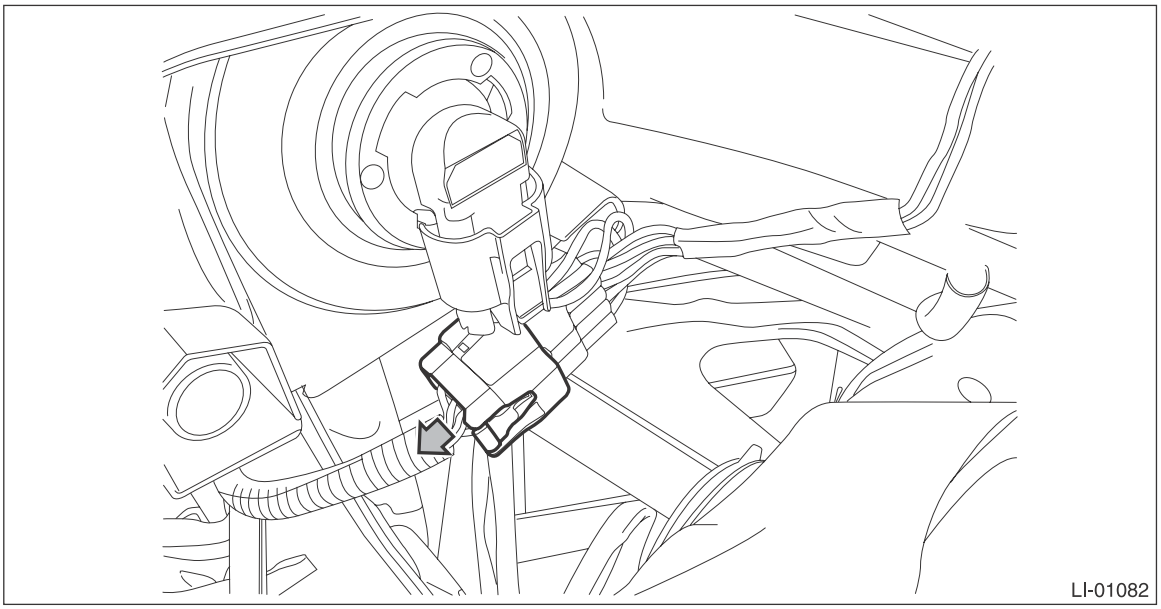

- Headlight connector LH

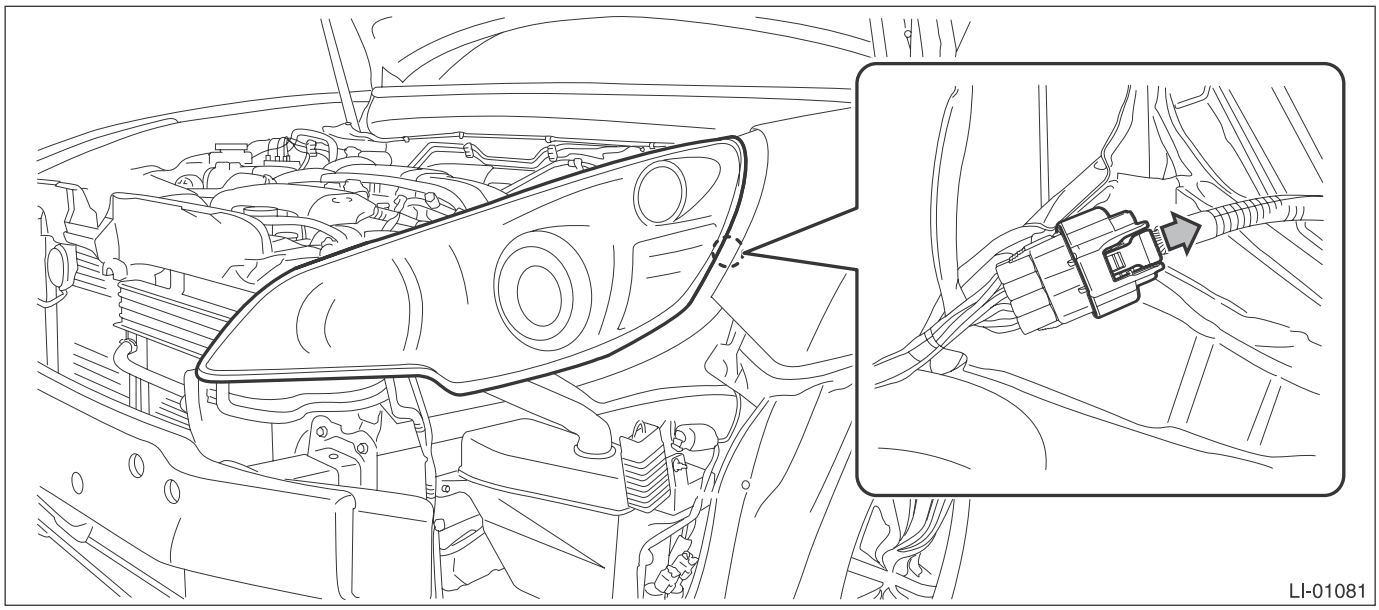

B: INSTALLATION

Install each part in the reverse order of removal.

Tightening torque:
Headlight ASSY: 7.5 N·m (0.76 kgf-m, 5.5 ft-lb)

C: ADJUSTMENT

1. HEADLIGHT BEAM ADJUSTMENT

CAUTION:
Turn off the light before adjusting the headlight beam level. If it is necessary to inspect the beam level, do not keep the light on for two minutes or more.

1) Before checking the headlight beam level, be sure of the following:
- the area around the headlight has not sustained any scratches, damage or other type of deformation.
- Vehicle is parked on a level surface.
- The inflation pressure of tires is correct.
- Vehicle's fuel tank is fully filled.

2) For vehicle with a manual leveler, set the headlight beam leveler switch to the "0" position.
3) Bounce the vehicle several times to normalize the suspension.
4) Make certain that someone is seated in the driver's seat.

5) Measure the distance between the low beam bulb centers, and the height of the bulb center.

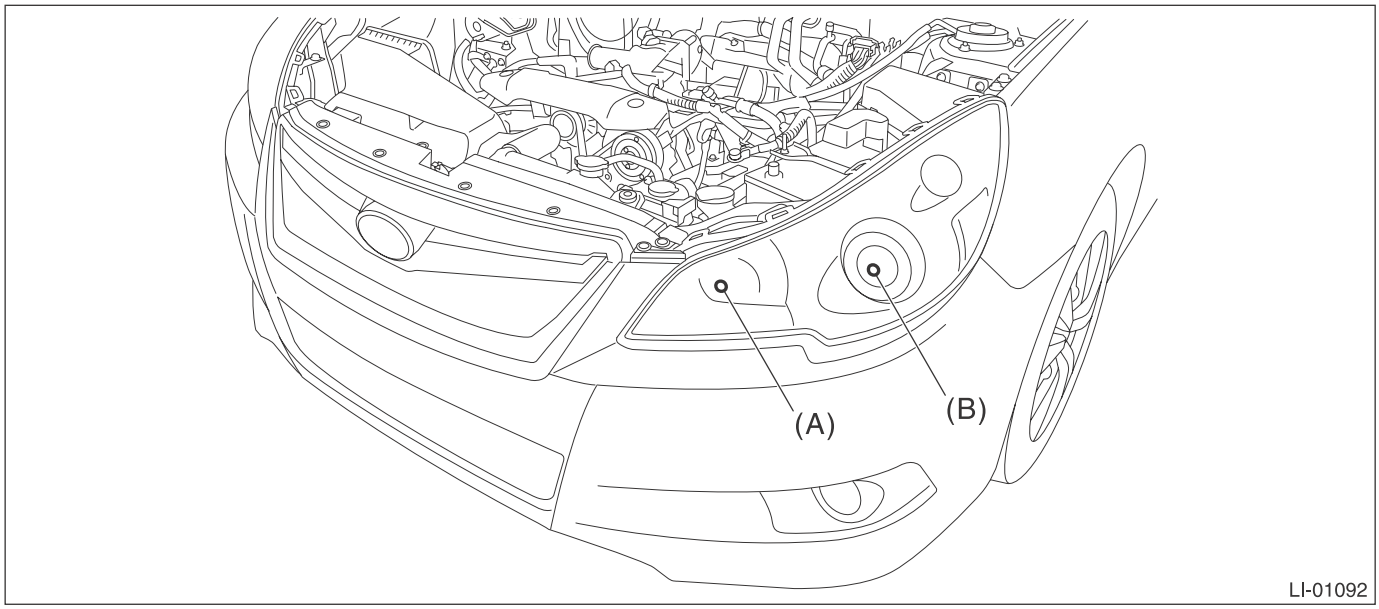

(A) High beam (B) Low beam

6) Place the vehicle with the front end facing to the measurement panel.

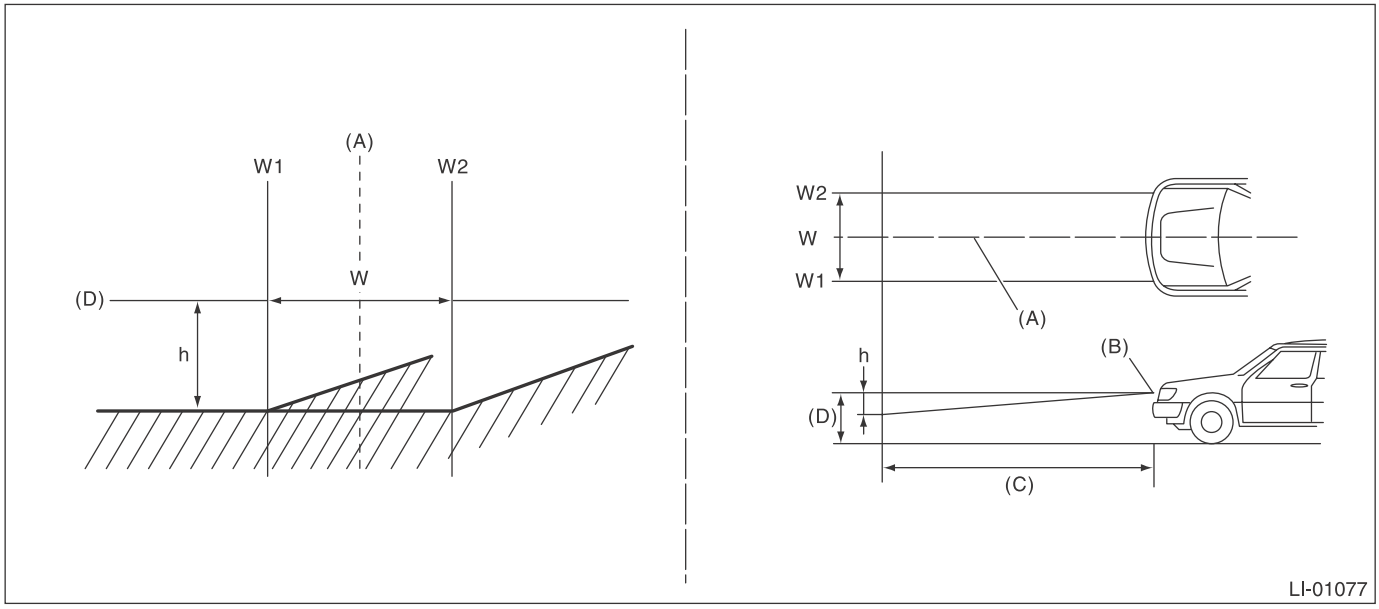

(A) Vehicle center (C) 3 m (10 ft) (D) Height of headlight center
(B) Bulb center marking

W mm (in)	h mm (in) at 3 m (10 ft)
1,404 (55.28)	21 (0.83)

7) Adjust the headlight low beam by turning the aiming screw.

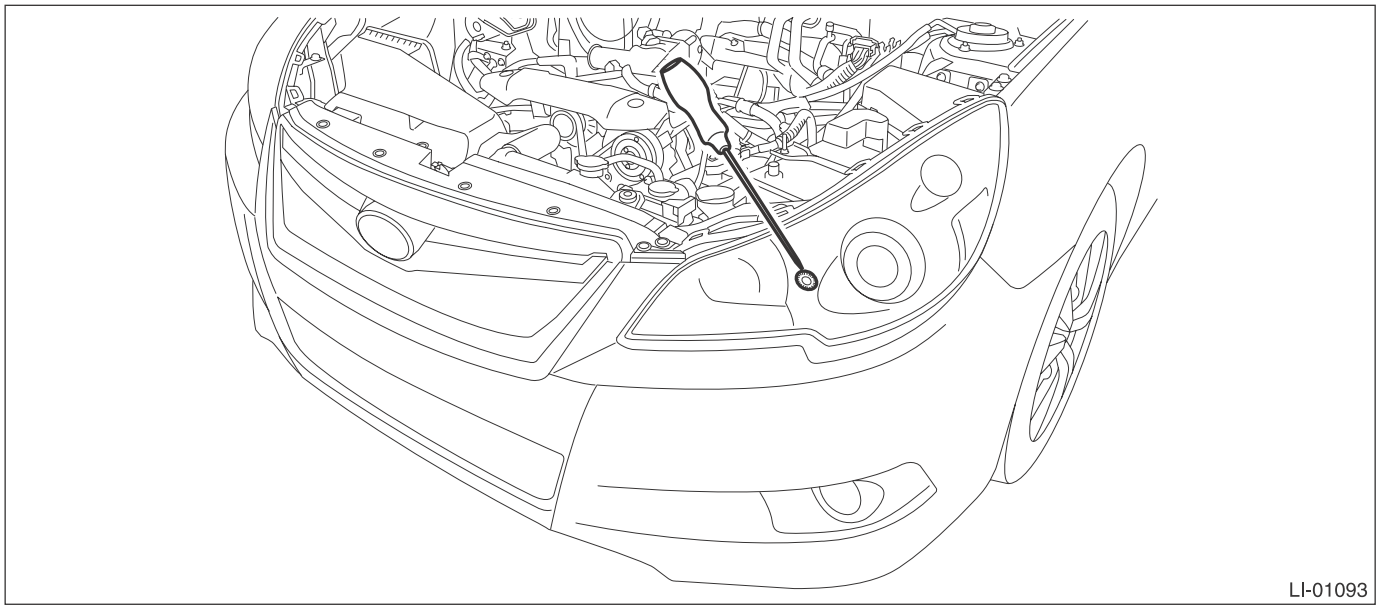

NOTE:
When using a tester, follow the instructions of the tester manual.

14.Headlight Bulb

A: REMOVAL

1. HIGH BEAM

CAUTION:
• Because the halogen bulb operates at a high temperature, dirt and oil on the bulb surface reduces the bulb's service life. Hold the flange portion when replacing the bulb. Never touch the glass portion.
• Do not leave the headlight without a bulb for a long time. Dust, moisture, etc. entering the headlight may affect its performance.
1) Disconnect the ground cable from battery.
2) Remove the clips and remove the air intake duct. (When removing the headlight high beam bulb RH)

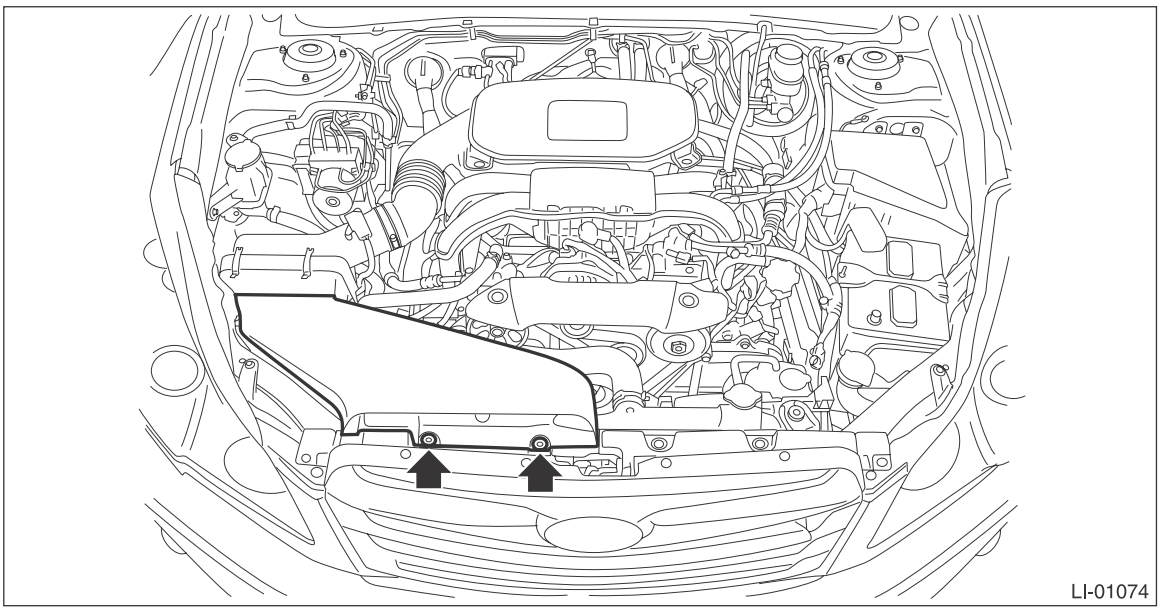

3) Disconnect the connector and remove the headlight high beam bulb.

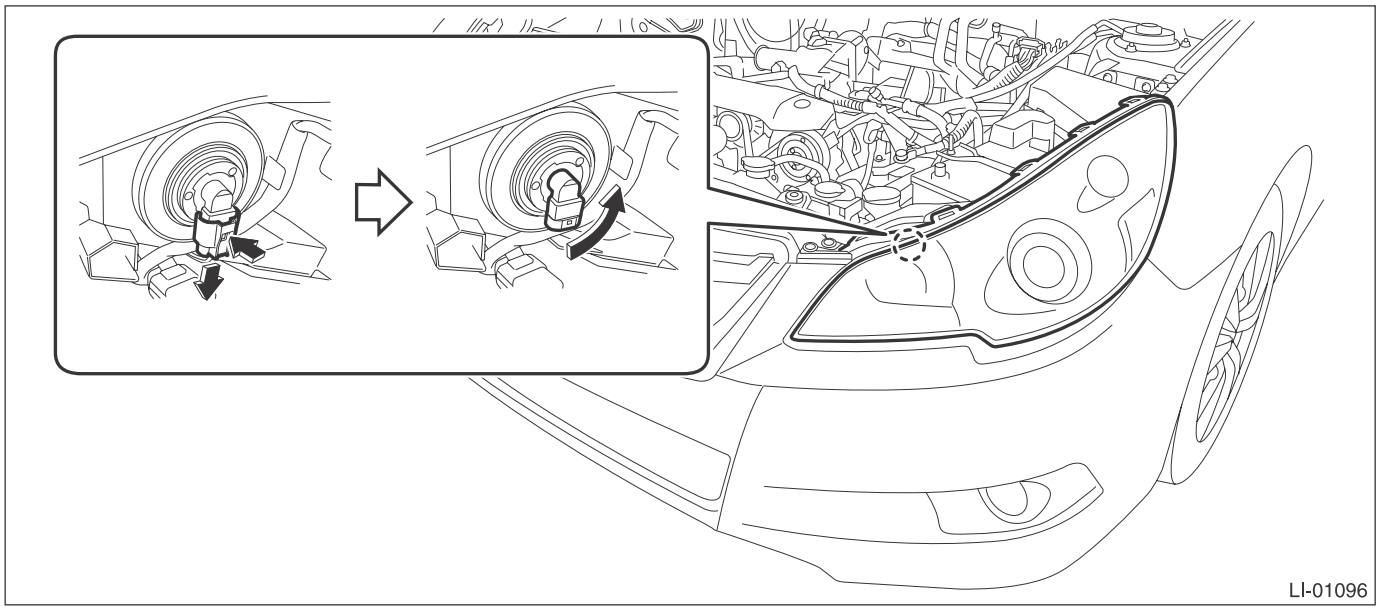

2. LOW BEAM

CAUTION:
• Because the halogen bulb operates at a high temperature, dirt and oil on the bulb surface reduces the bulb's service life. Hold the flange portion when replacing the bulb. Never touch the glass portion.
• Do not leave the headlight without a bulb for a long time. Dust, moisture, etc. entering the headlight may affect its performance.
1) Disconnect the ground cable from battery.
2) Remove the clips and remove the air intake duct. (When removing the headlight low beam bulb RH)

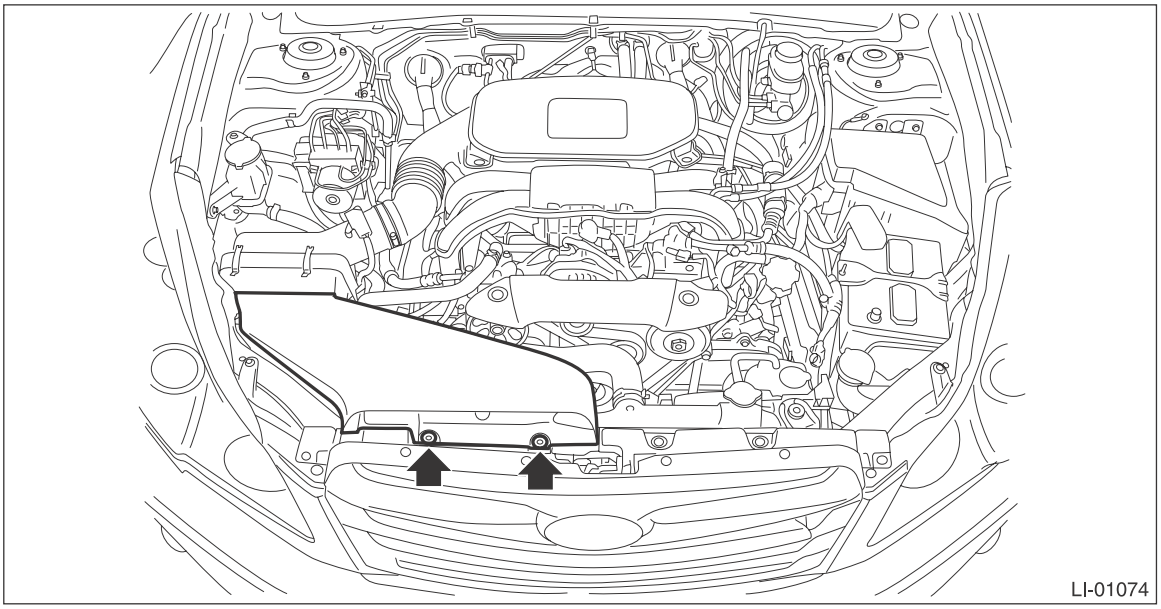

3) Turn the steering wheel in the opposite direction to the headlight to be removed. Then remove the clips and turn over the mud guard.

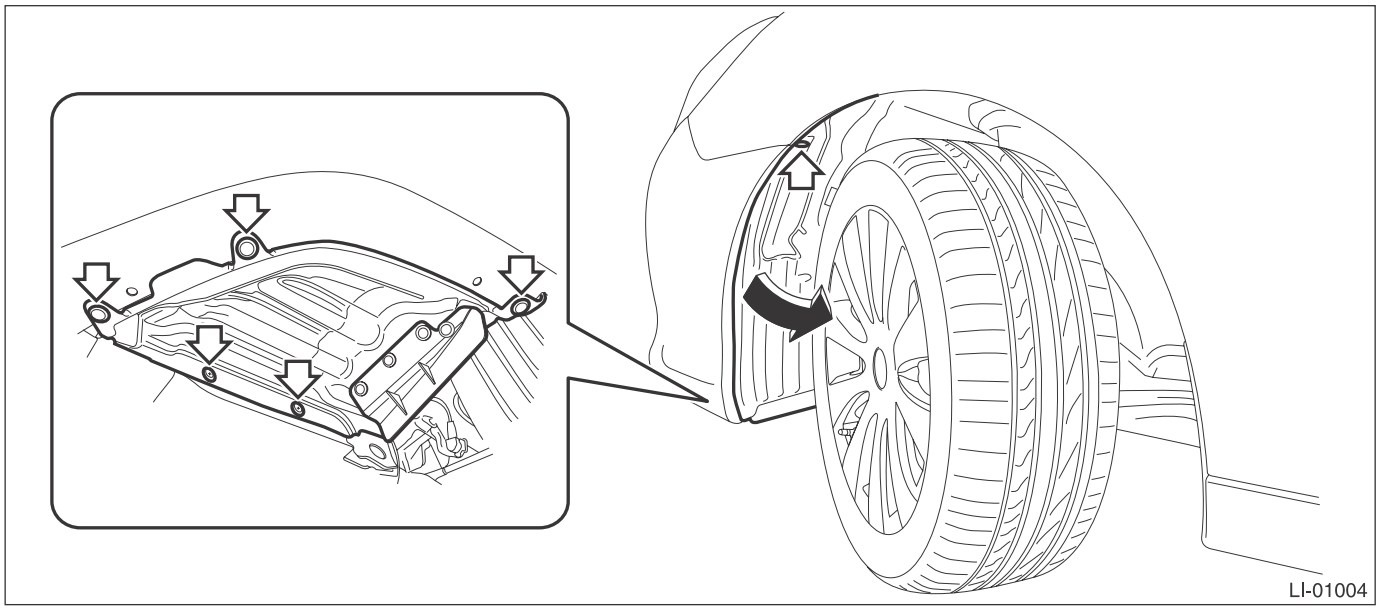

4) Remove the headlight low beam bulb.

(1) Remove the back cover.

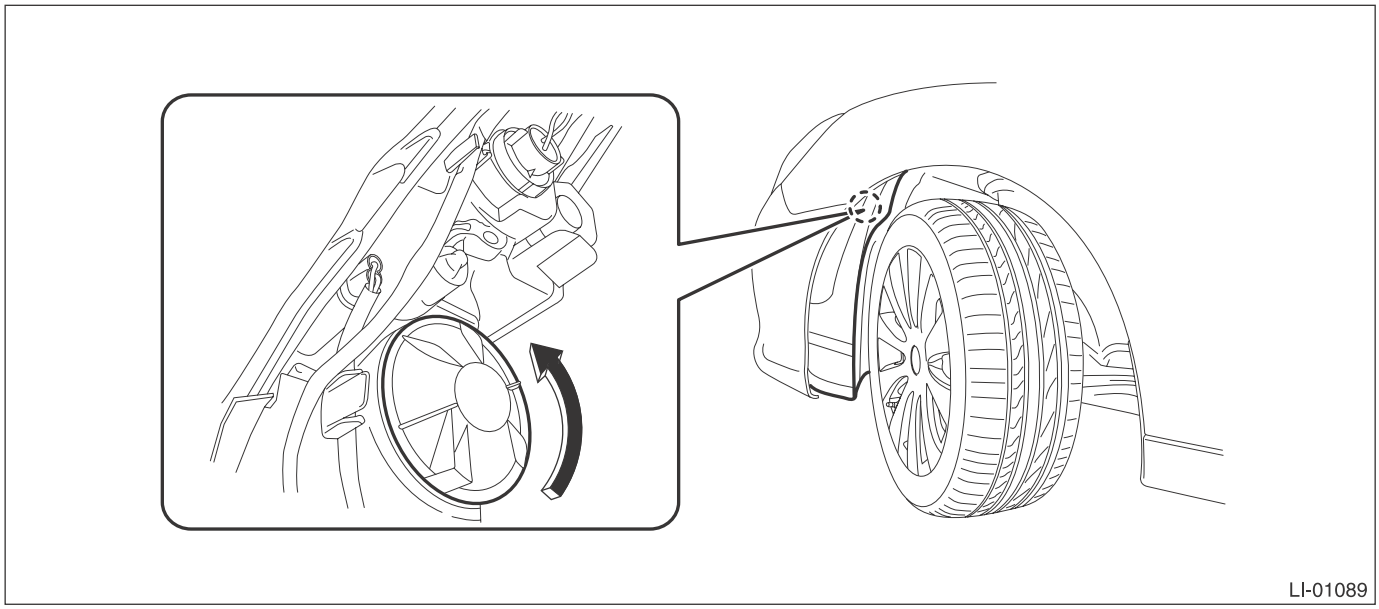

(2) Unlock the bulb socket and bulb spring, and remove the headlight low beam bulb.

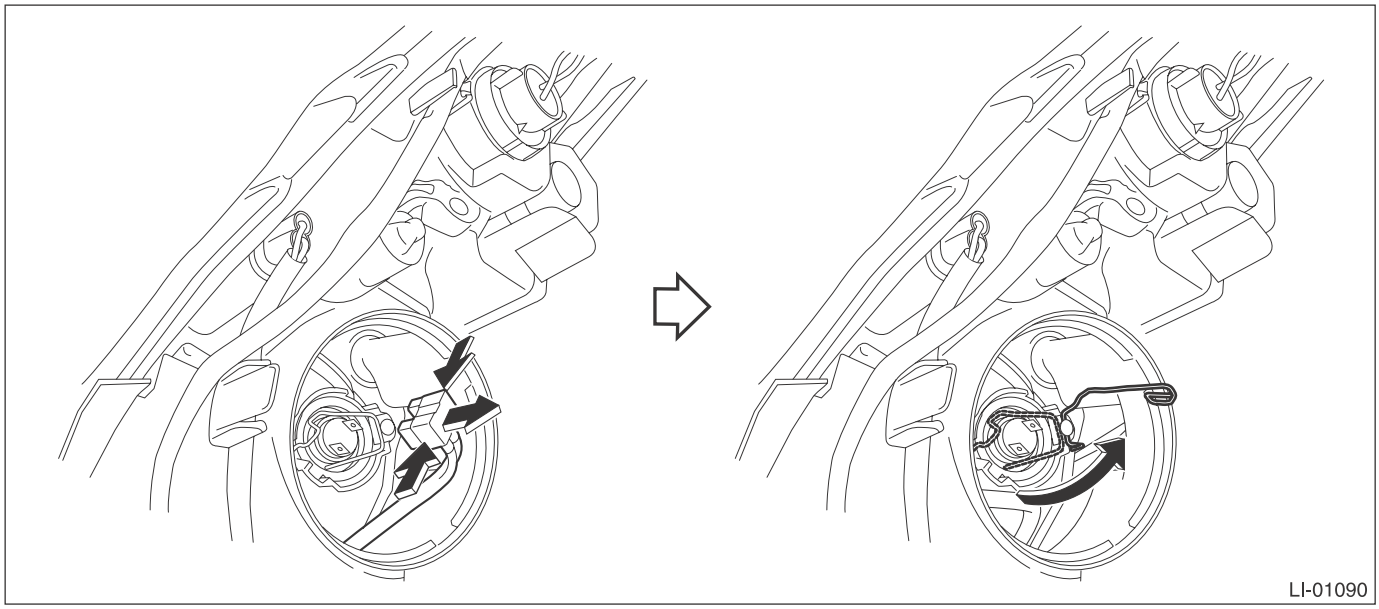

B: INSTALLATION

NOTE:
When installing the back cover, turn it to the position shown in the figure to lock while pressing the entire periphery of the cover.

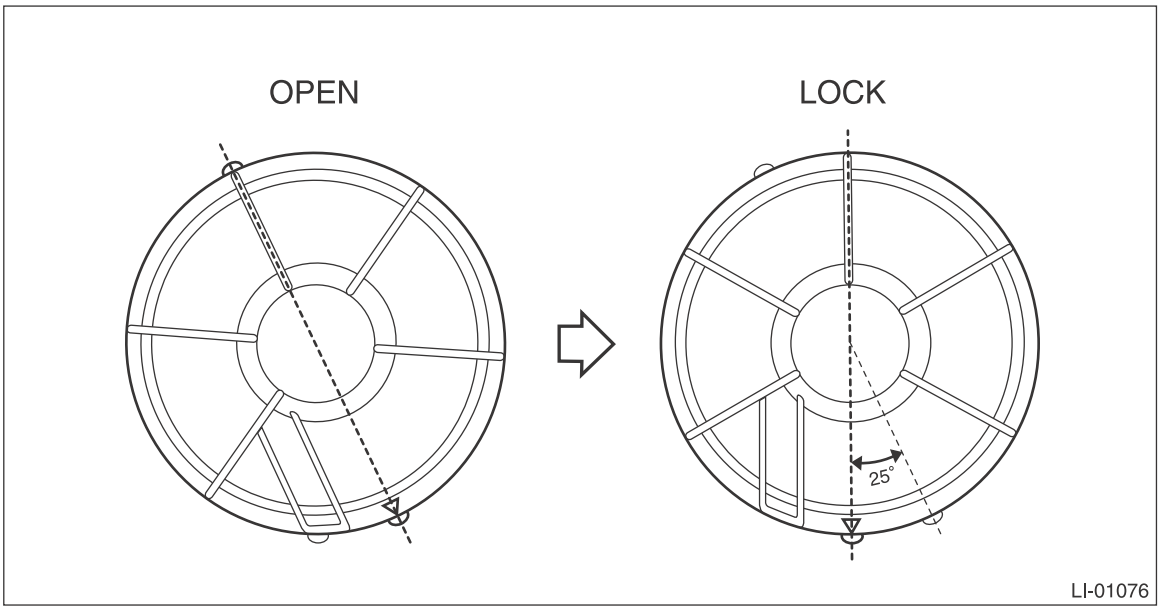

Install each part in the reverse order of removal.

C: INSPECTION

1) Visually check the bulb for blow out.
2) Check the bulb specification. <Ref. to LI-2, SPECIFICATION, General Description.>
3) Replace the bulb if it is found defective.

15.Front Turn Signal Light Bulb

A: REMOVAL

1) Disconnect the ground cable from battery.
2) Remove the clips and remove the air intake duct. (When removing the front turn signal light bulb RH)

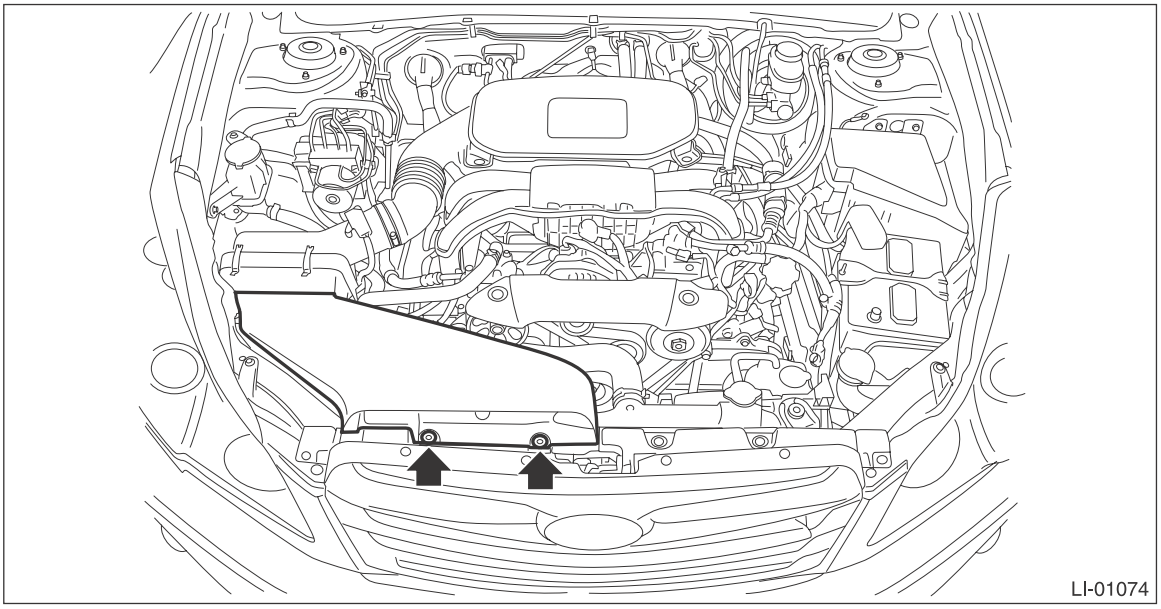

3) Remove the fender cover assembly UPR.
   (1) Remove the clip.
   (2) Release the claws of the fender cover assembly UPR by pulling it forward and remove the fender cover.

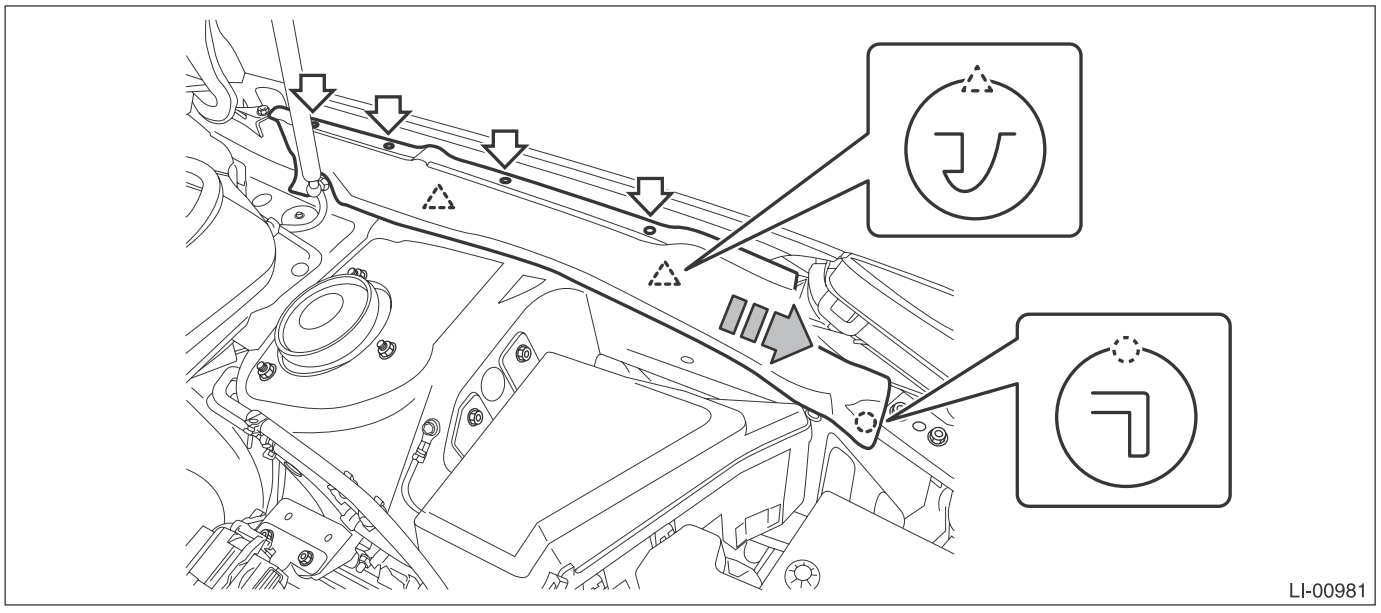

4) Remove the bulb socket and turn signal light bulb.

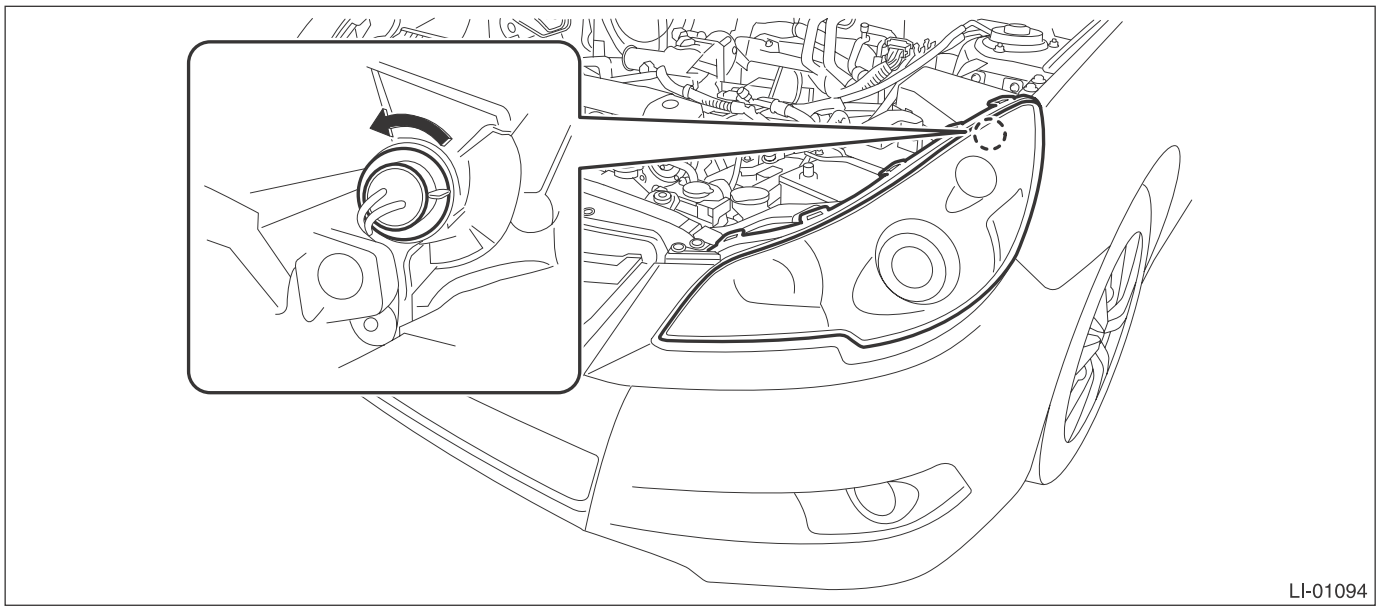

B: INSTALLATION

Install each part in the reverse order of removal.

C: INSPECTION

1) Visually check the bulb for blow out.
2) Check the bulb specification. <Ref. to LI-2, SPECIFICATION, General Description.>
3) If NG, replace the bulb with a new part.

16.Clearance/Parking Light Bulb

A: REMOVAL

1) Disconnect the ground cable from battery.
2) Remove the clips and remove the air intake duct. (When removing the front clearance light bulb RH)

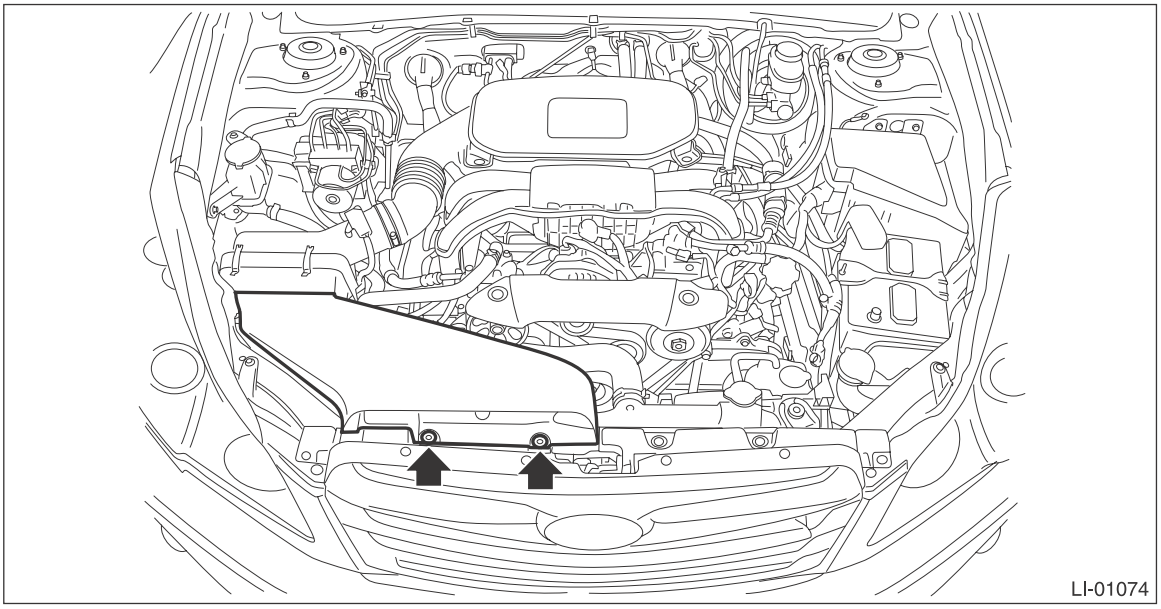

3) Remove the bulb socket and clearance light bulb.

NOTE:
Move the battery rearward as required. (When removing the front clearance light bulb LH)

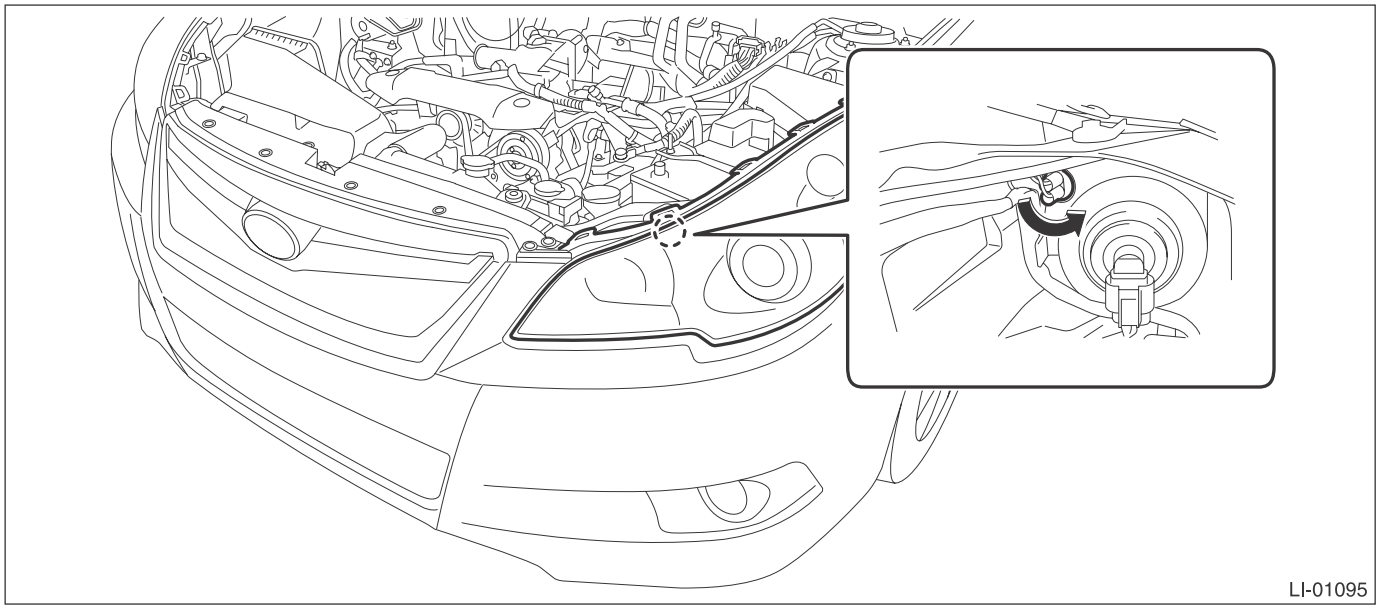

B: INSTALLATION

Install each part in the reverse order of removal.

C: INSPECTION

1) Visually check the bulb for blow out.
2) Check the bulb specification. <Ref. to LI-2, SPECIFICATION, General Description.>
3) Replace the bulb if it is found defective.

17.Front Side Marker Light Bulb

A: REMOVAL

1) Disconnect the ground cable from battery.
2) Remove the clips and remove the air intake duct. (When removing the front turn signal light bulb RH)

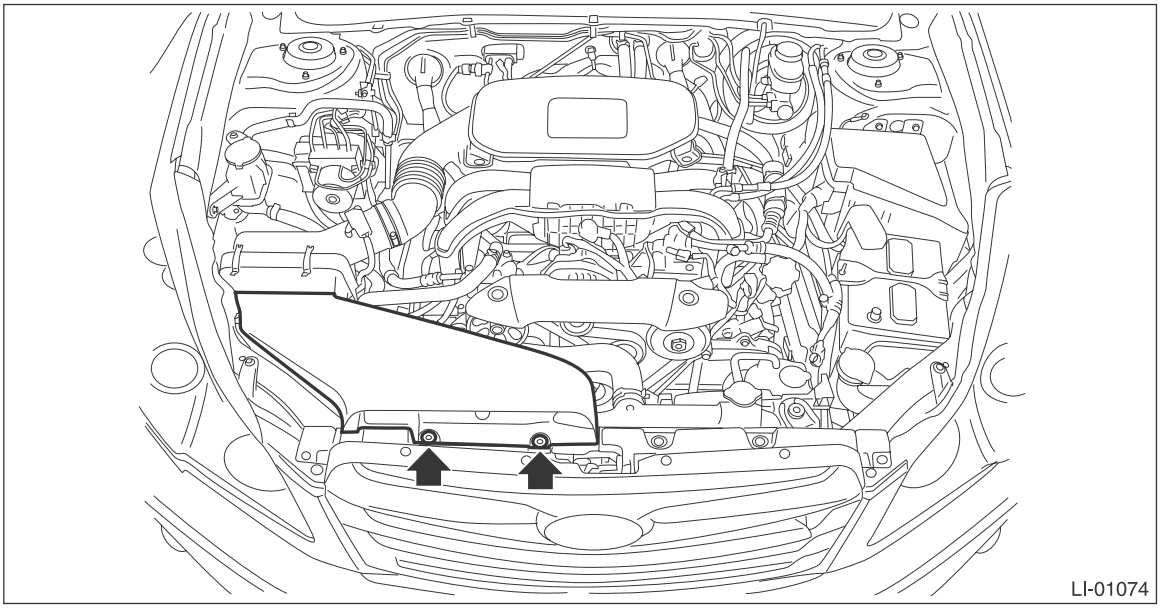

3) Turn the steering wheel in the opposite direction to the headlight to be removed. Then remove the clips and turn over the mud guard.

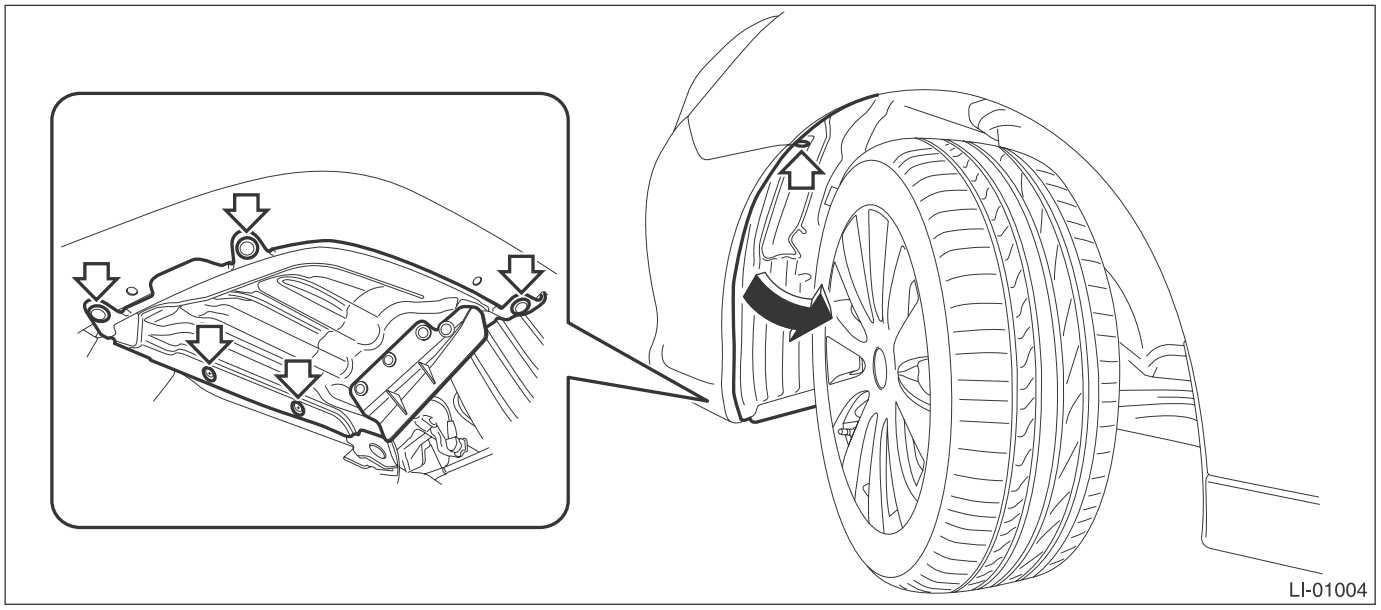

4) Remove the bulb socket and turn signal light bulb.

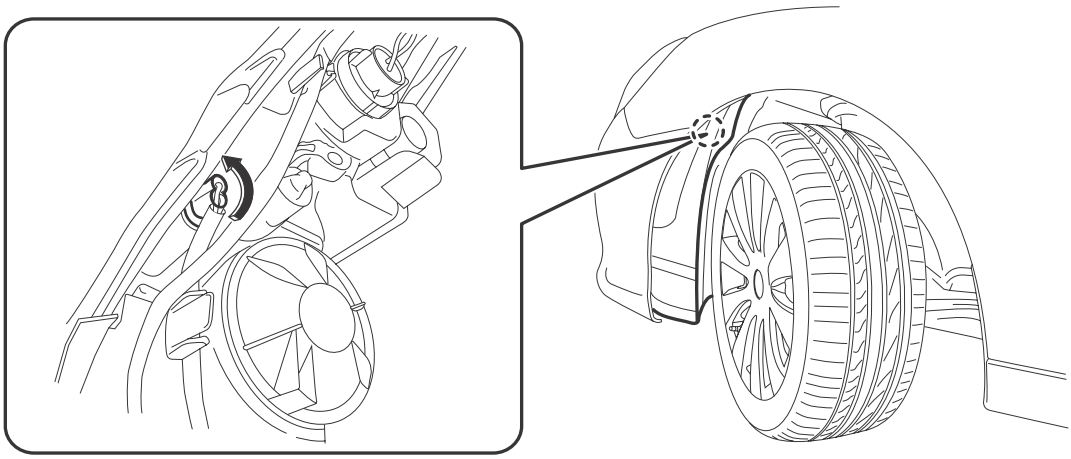

B: INSTALLATION

Install each part in the reverse order of removal.

C: INSPECTION

1) Visually check the bulb for blow out.
2) Check the bulb specification. <Ref. to LI-2, SPECIFICATION, General Description.>
3) If NG, replace the bulb with a new part.

18.Front Fog Light Assembly

A: REMOVAL

1) Disconnect the ground cable from battery.
2) Remove the clips and turn over the front end of front mud guard.

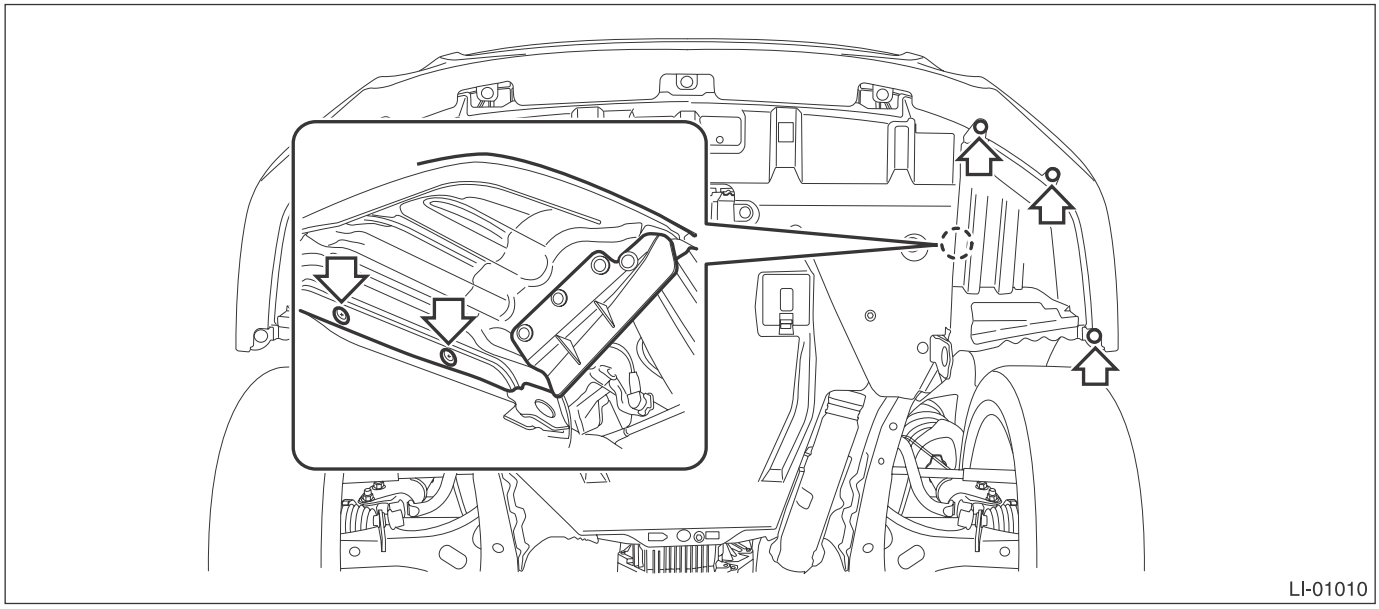

3) From the bottom of bumper face, remove the front fog light assembly.
   (1) Disconnect the connector.
   (2) Remove the bolts, and remove the front fog light assembly.

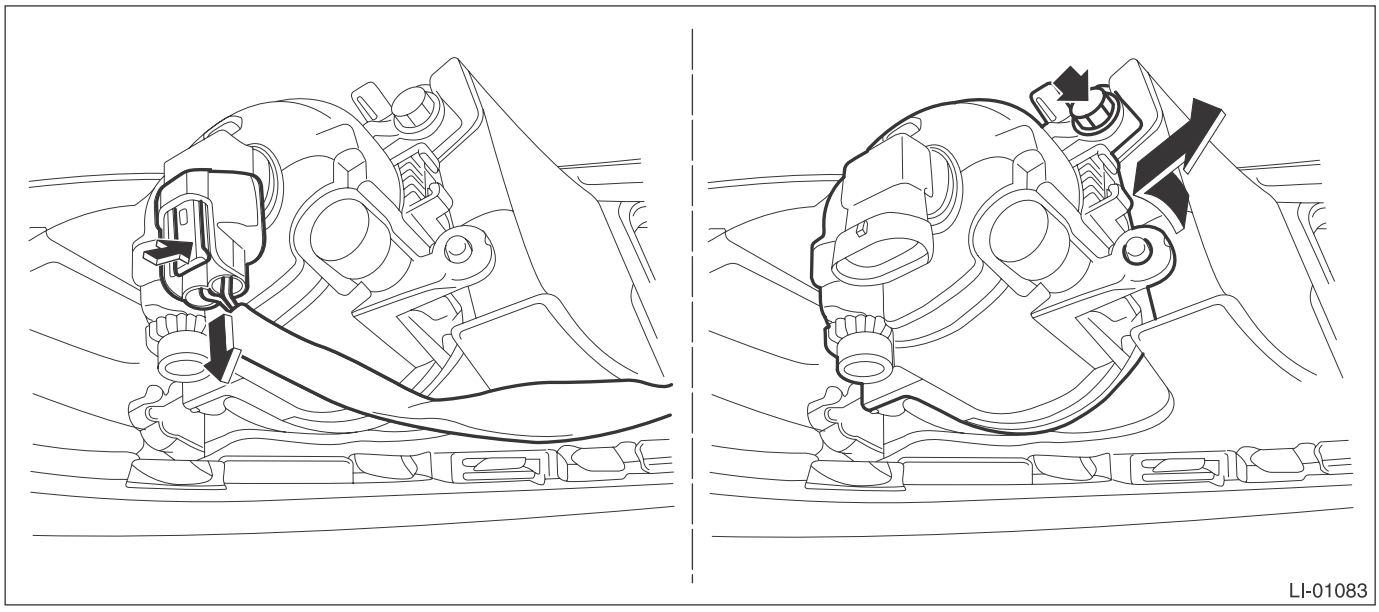

B: INSTALLATION

Install each part in the reverse order of removal.

Tightening torque:
Front fog light assembly: 7.5 N·m (0.76 kgf-m, 5.5 ft-lb)

C: ADJUSTMENT

1. FOG LIGHT AIMING

1) Before checking the fog light beam level, be sure of the following:
- The area around the fog light has not sustained any accident, damage or other type of deformation.
- Vehicle is parked on a level surface.
- The inflation pressure of tires is correct.
- Vehicle's fuel tank is fully filled.

2) Bounce the vehicle several times to normalize the suspension.
3) Make certain that someone is seated in the driver's seat.
4) Place the vehicle with the front end facing to the measurement panel.

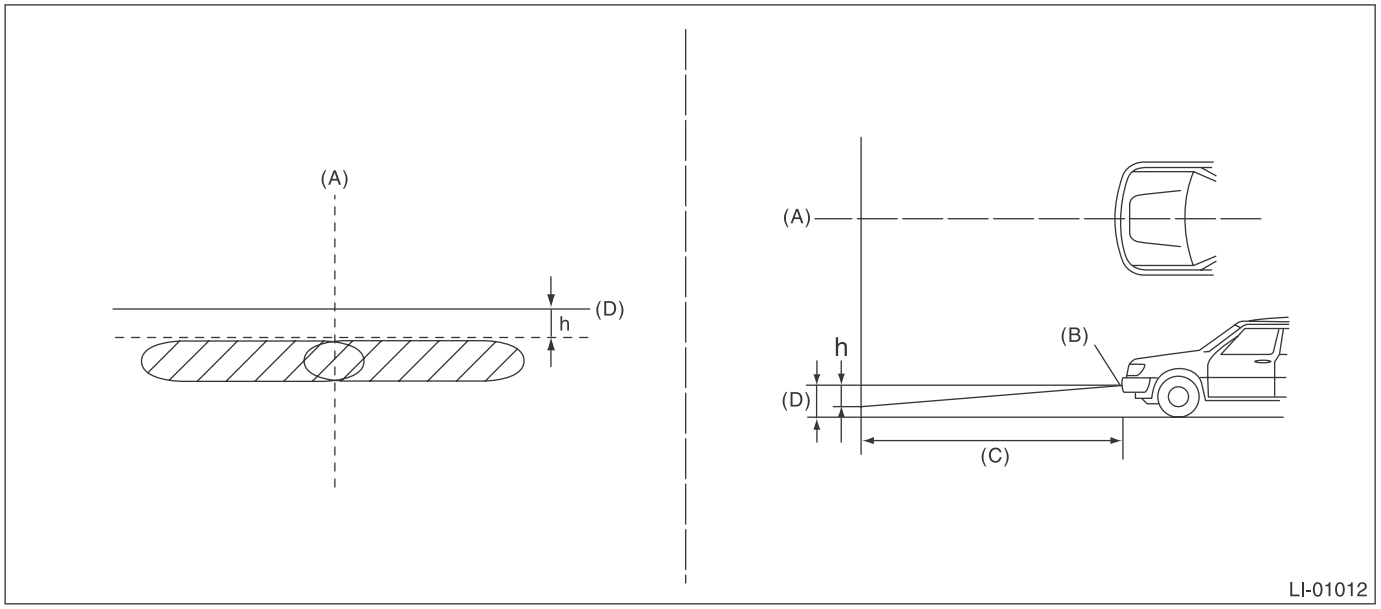

(A) Vehicle center
(B) Bulb center marking
(C) 3 m (10 ft)
(D) Height of fog light center

h mm (in) at 3 m (10 ft)
40 (1.58)

5) Adjust the fog light beam.

(1) Remove the clips and turn over the front end of front mud guard.

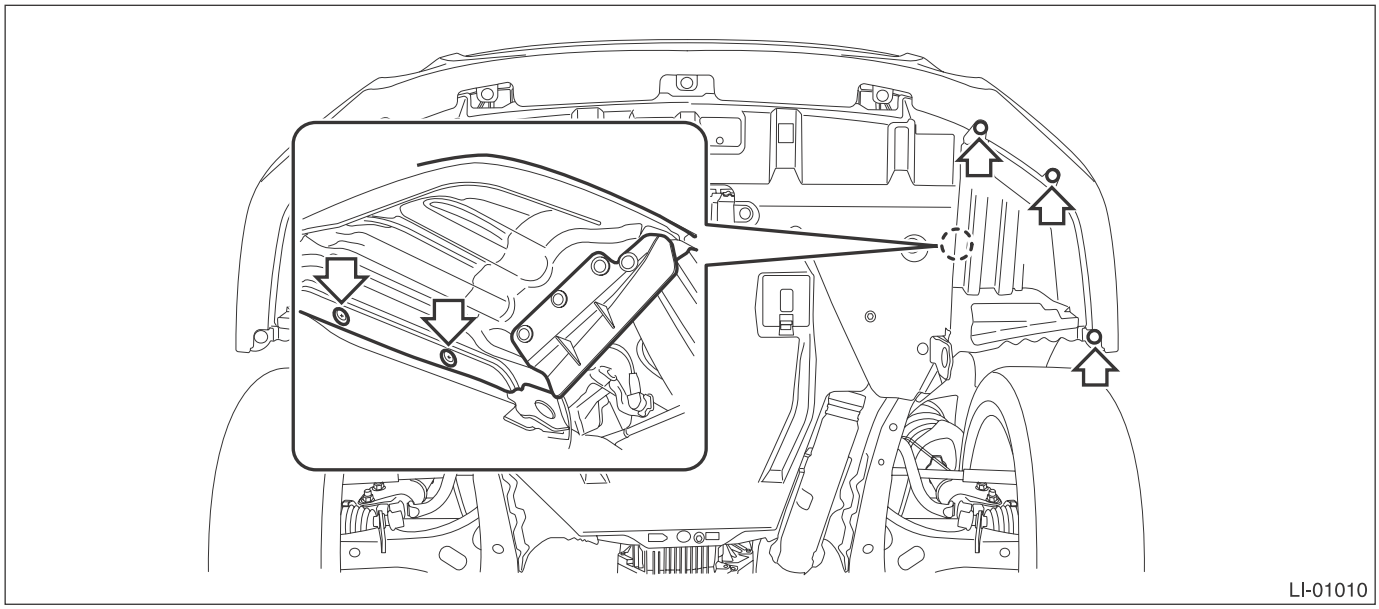

(2) Adjust the beam direction by turning the aiming screw from the bottom of front bumper face.

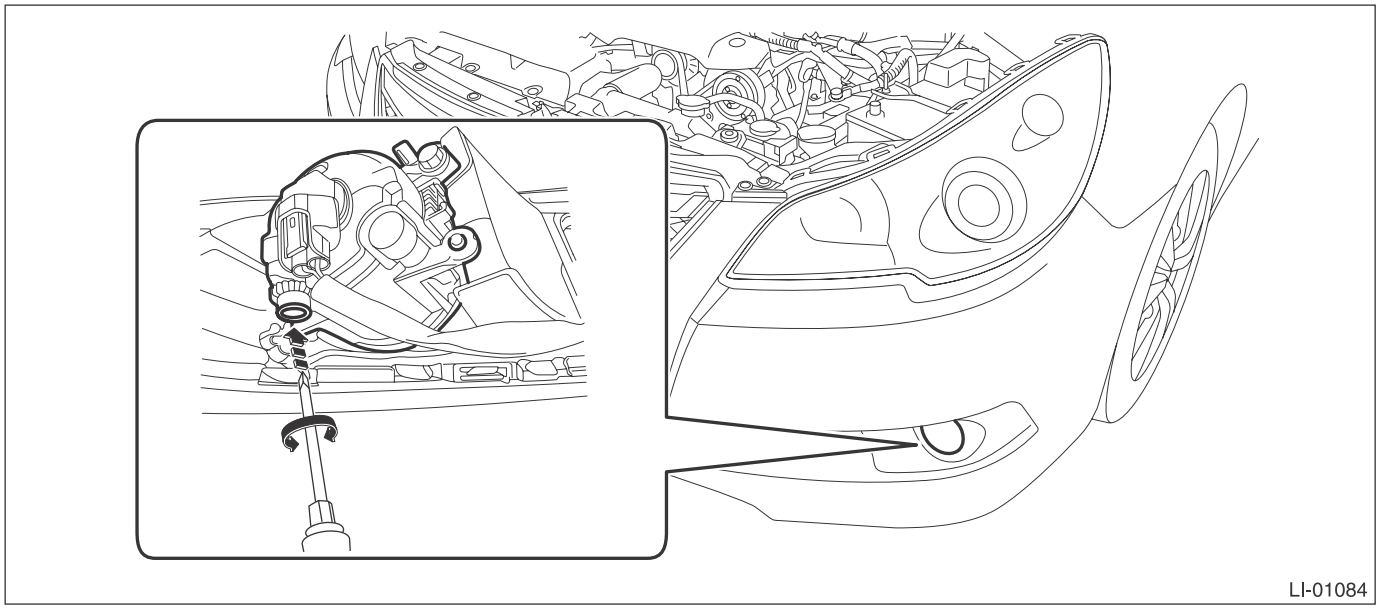

19.Front Fog Light Bulb

A: REMOVAL

1) Disconnect the ground cable from battery.
2) Remove the clips and turn over the front end of front mud guard.

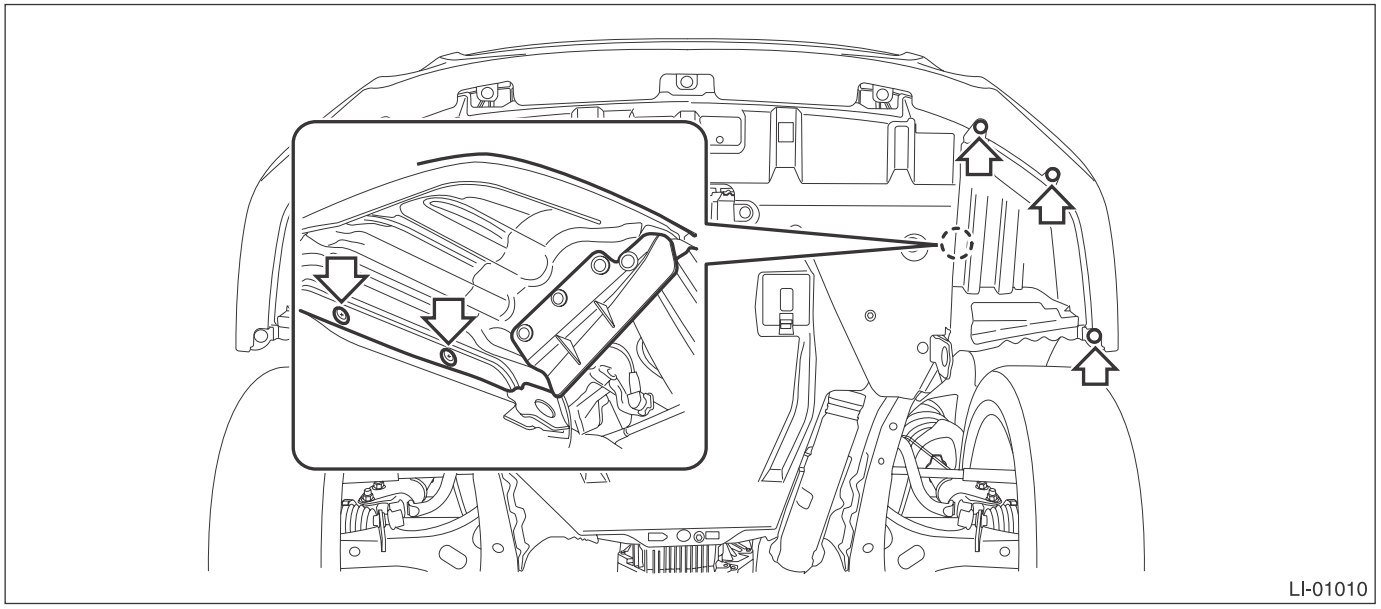

3) From the bottom of bumper face, remove the front fog light bulb.
   (1) Disconnect the connector.
   (2) Remove the bulb.

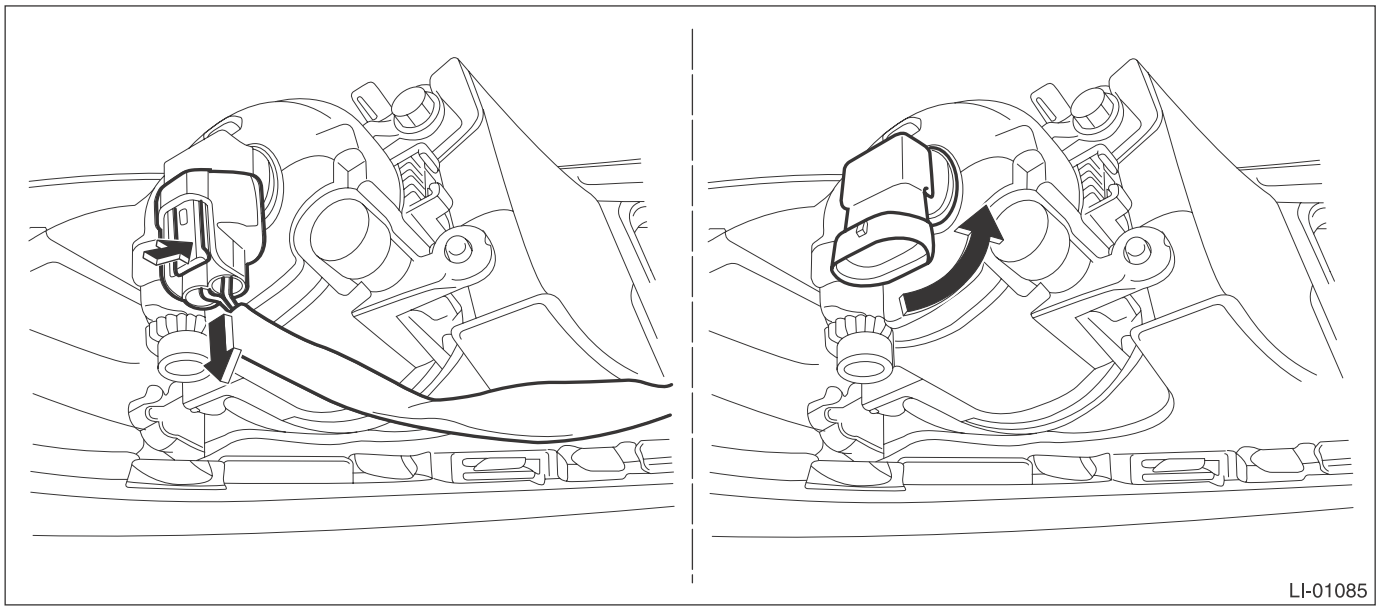

B: INSTALLATION

CAUTION:
After connecting the connector, make sure that the bulb is locked securely.
Install each part in the reverse order of removal.

C: INSPECTION

1) Visually check the bulb for blow out.
2) Check the bulb specification. <Ref. to LI-2, SPECIFICATION, General Description.>
3) If NG, replace the bulb with a new part.

20.Side Turn Signal Light Assembly

A: REMOVAL

1) Disconnect the ground cable from battery.
2) Remove the mirror. <Ref. to GW-27, REPLACEMENT, Outer Mirror.>
3) Remove the scalp cap. <Ref. to GW-21, REPLACEMENT, Scalp Cap.>
4) Remove the side turn signal light assembly.
   (1) Remove the screws and pull out the side turn signal light assembly.
   (2) Disconnect the connector and remove the side turn signal light assembly.

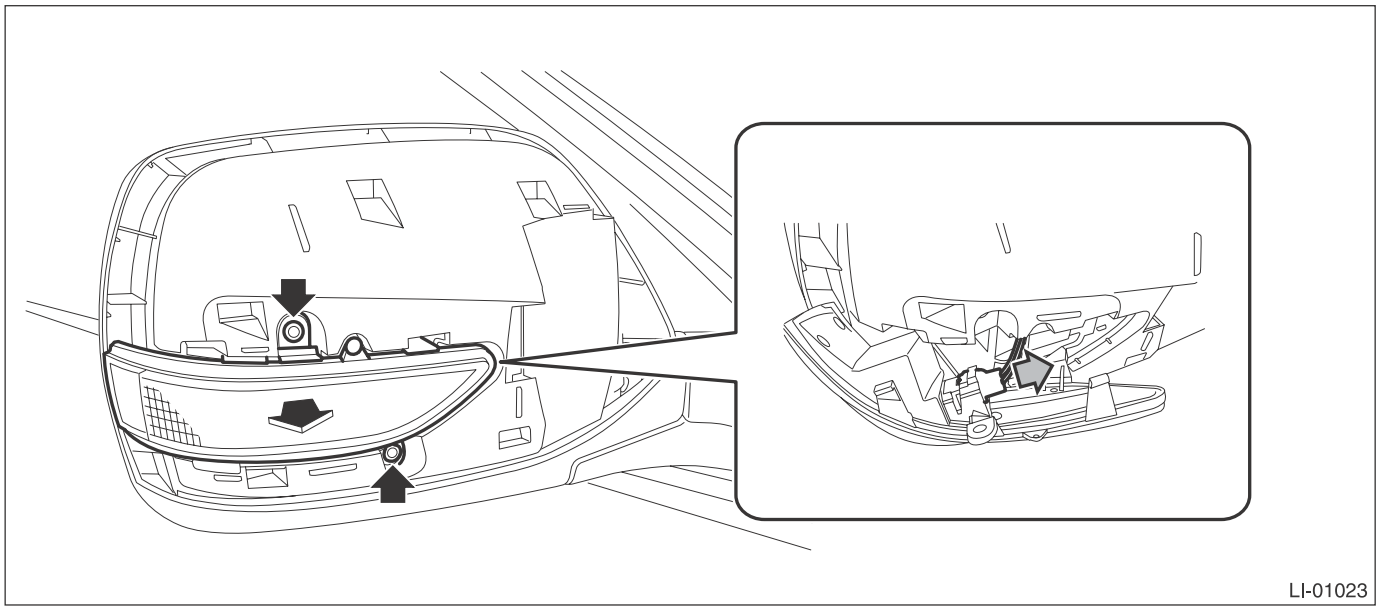

B: INSTALLATION

Install each part in the reverse order of removal.

C: INSPECTION

1) Install the side turn signal light assembly and check that it blinks normally.
2) If it is found not to blink normally, replace the side turn signal light assembly with a new part.

NOTE:
Since LED (Light Emitting Diode) is used for the side turn signal light, replace the side turn signal light assembly if the LED burns out.

21.Rear Combination Light Assembly

A: REMOVAL

1. SEDAN MODEL

1) Disconnect the ground cable from battery.
2) Remove the trunk room trim. <Ref. to EI-127, REMOVAL, Trunk Room Trim.>
3) Remove the rear combination light assembly.
   (1) Disconnect the connector.
   (2) Release the nuts and clips, then remove the rear combination light assembly.

CAUTION:
Be careful not to damage the clips.

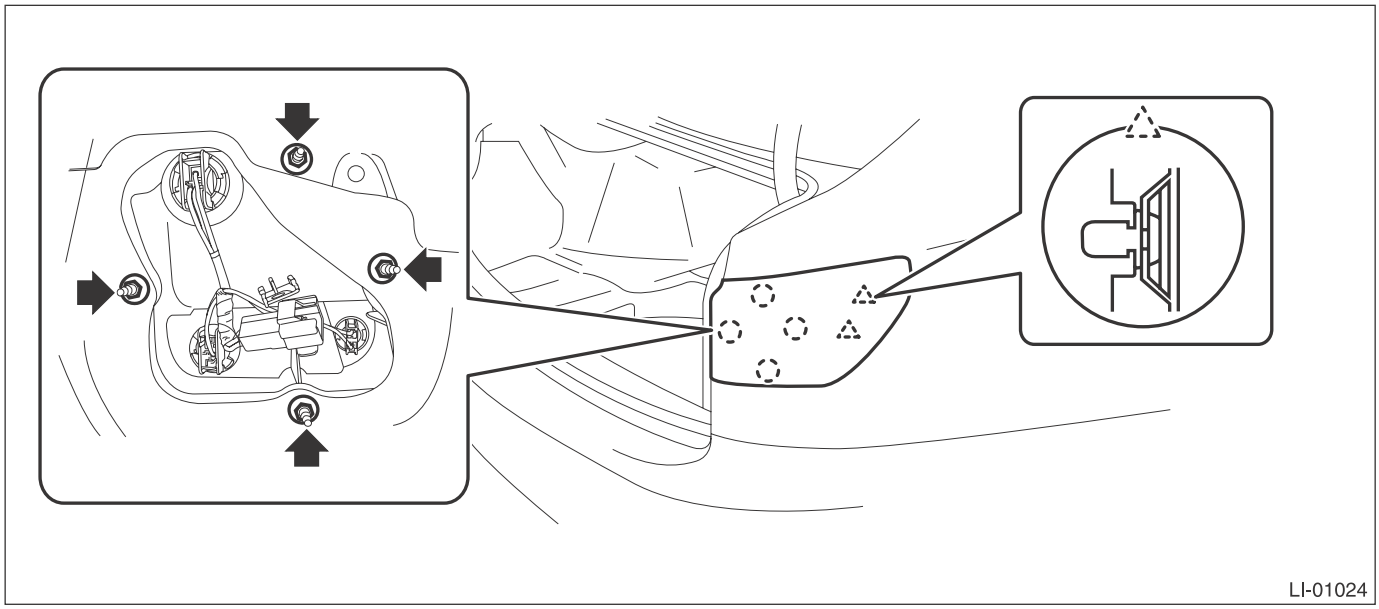

2. OUTBACK MODEL

1) Disconnect the ground cable from battery.
2) Remove the clips and detach the rear combination light covers.

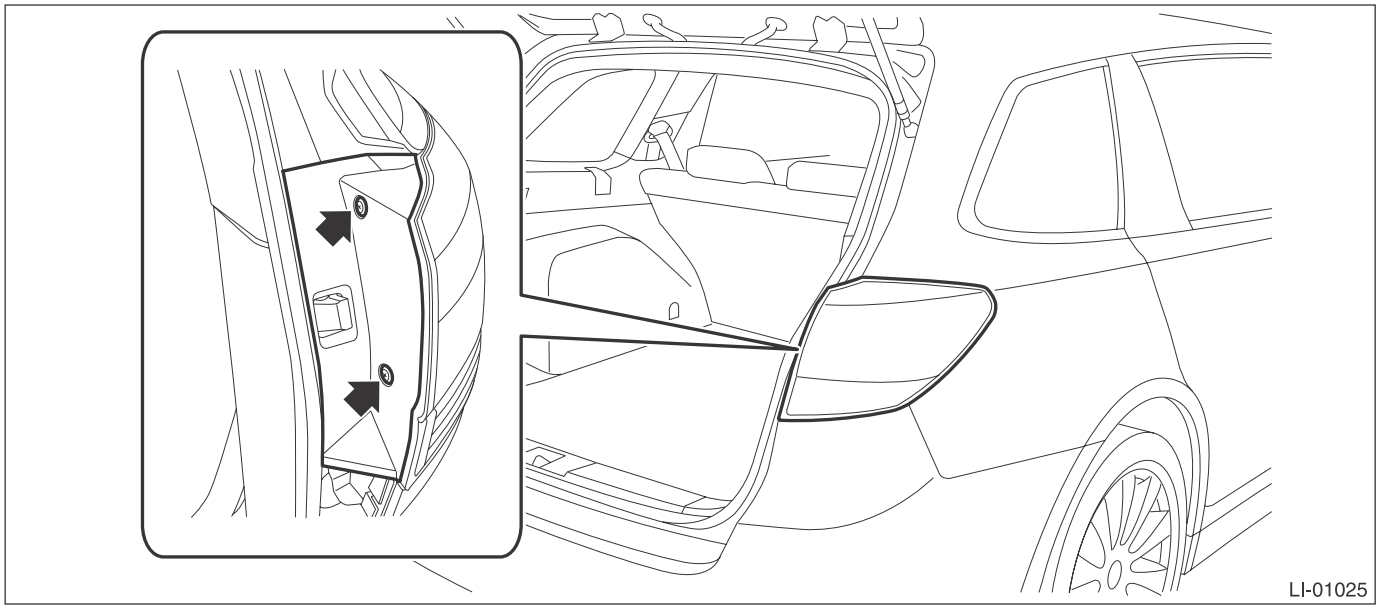

3) Remove the rear combination light assembly.

CAUTION:
Be careful not to damage the clips.

(1) Release the bolts and clips, then pull out the rear combination light assembly to the vehicle rear.
(2) Disconnect the connector and remove the rear combination light assembly.

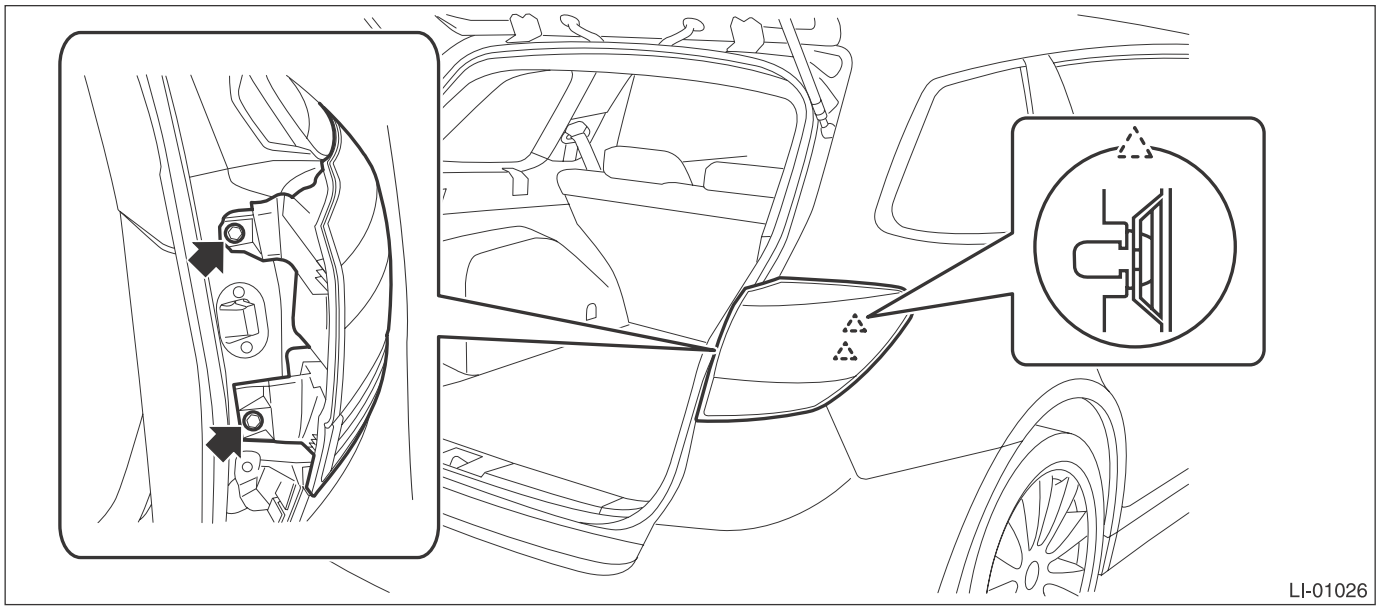

B: INSTALLATION

Install each part in the reverse order of removal.

Tightening torque:
Rear combination light ASSY: 7.5 N·m (0.76 kgf-m, 5.5 ft-lb)

C: INSPECTION

1) Visually check the bulb for blow out.
2) Check the bulb specification. <Ref. to LI-2, SPECIFICATION, General Description.>
3) Replace the bulb if it is found defective.

22.Tail/Stop Light Bulb

A: REMOVAL

1. SEDAN MODEL

• Rear combination light side

1) Disconnect the ground cable from battery.
2) Release the lock and remove the bulb inspection cover of trunk room trim.

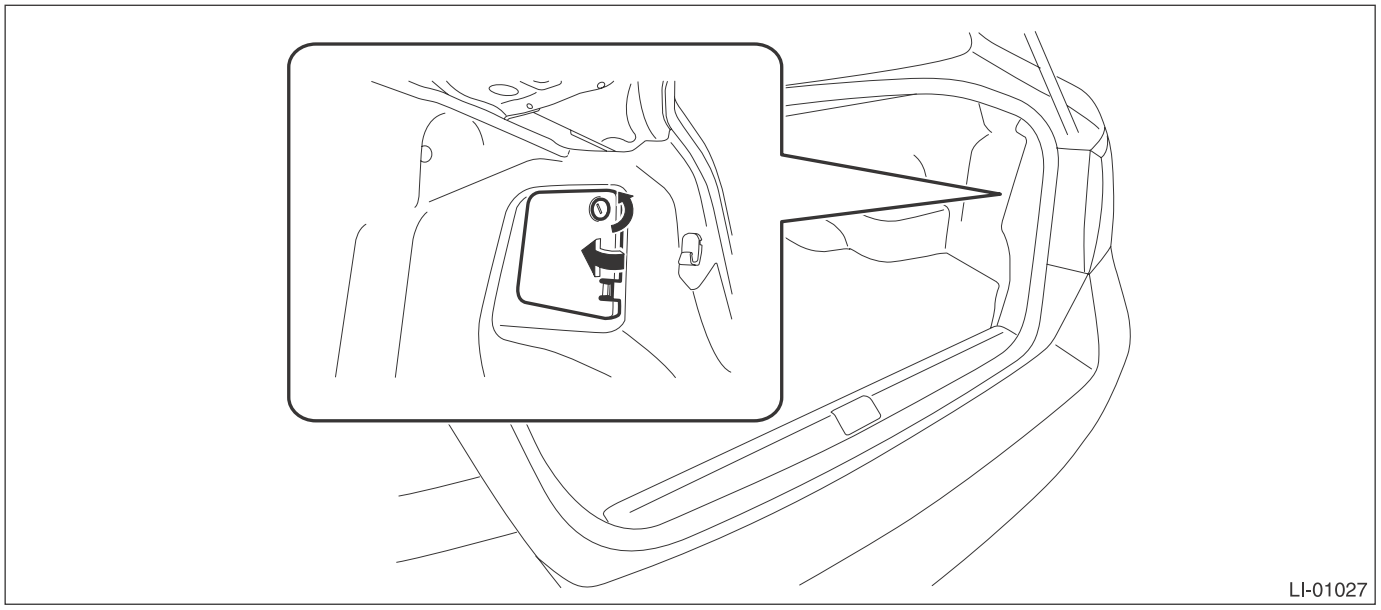

3) Remove the bulb socket and tail light/stop light bulb.

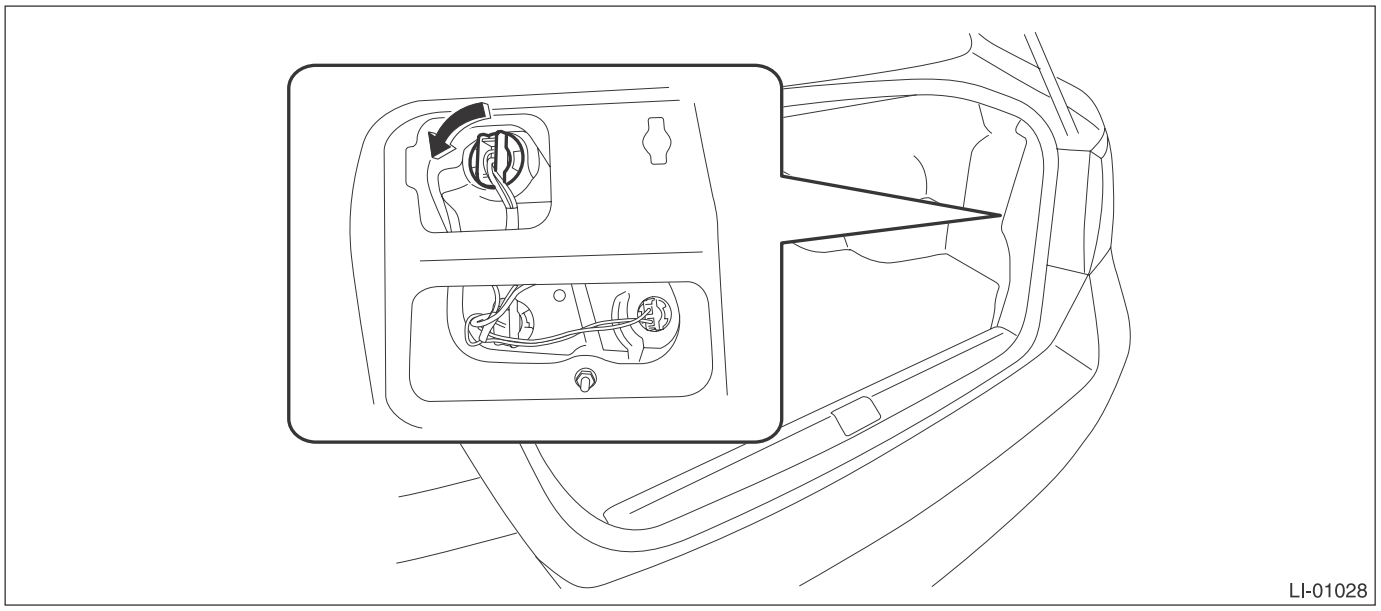

• **Rear finisher light side**

1) Disconnect the ground cable from battery.
2) Remove the trunk lid trim. <Ref. to EI-127, TRUNK LID TRIM, REMOVAL, Trunk Room Trim.>
3) Remove the bulb socket and tail light bulb.

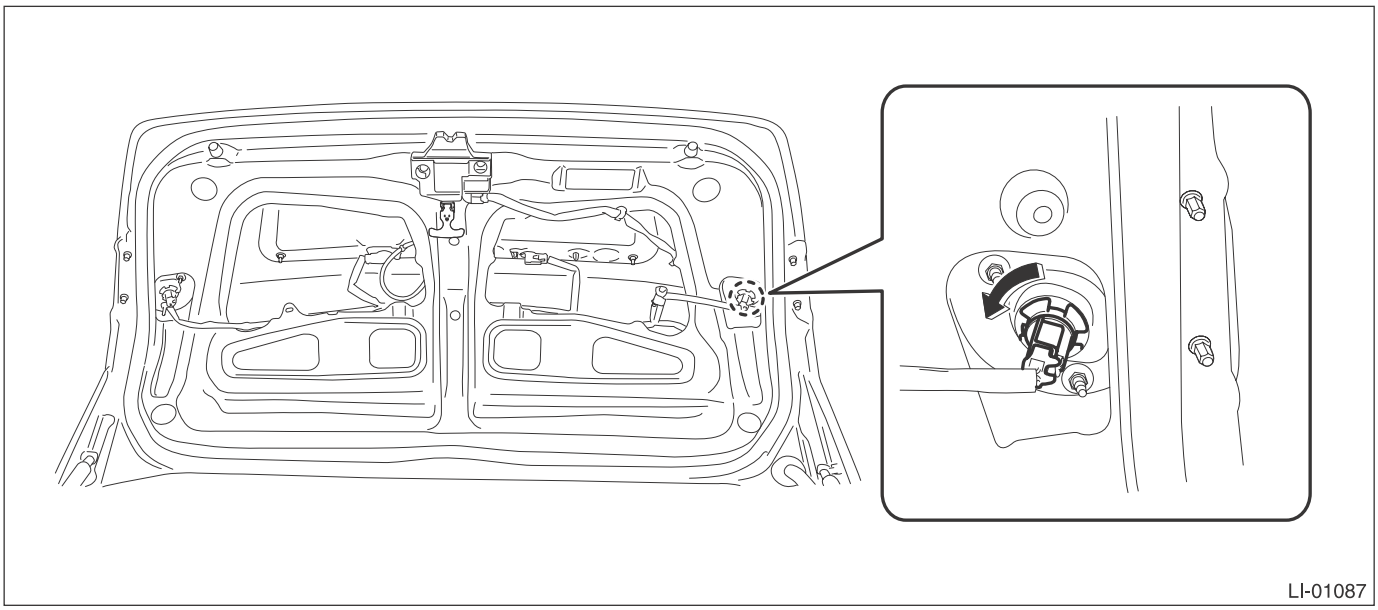

2. OUTBACK MODEL

• **Rear combination light side**

1) Disconnect the ground cable from battery.
2) Remove the clips and detach the rear combination light covers.

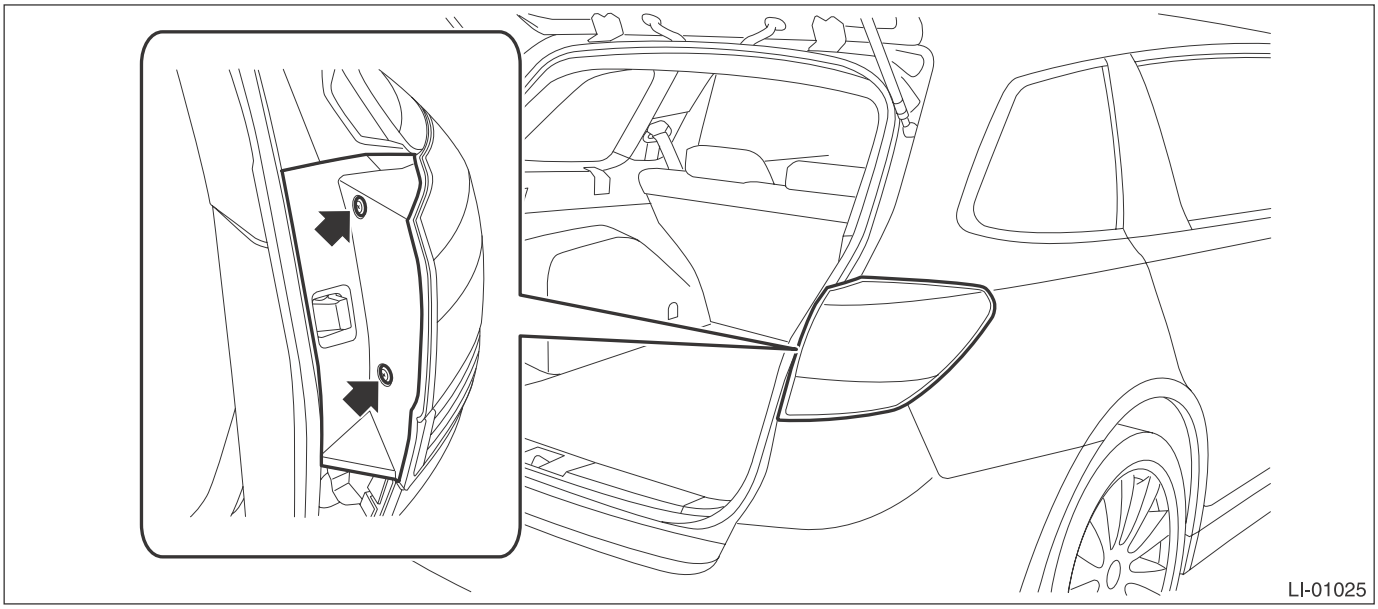

3) Remove the rear combination light assembly.

CAUTION:
Be careful not to damage the clips.

(1) Release the bolts and clips, then pull out the rear combination light assembly to the vehicle rear.

(2) Disconnect the connector and remove the rear combination light assembly.

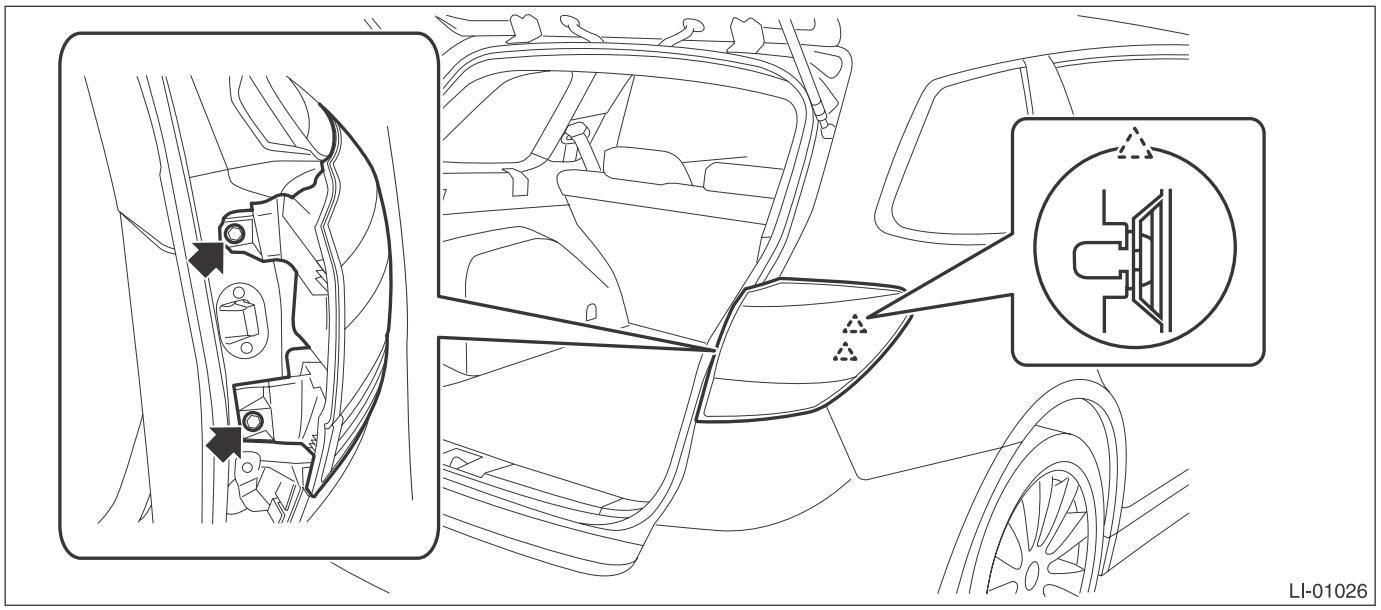

4) Remove the bulb sockets and bulbs.

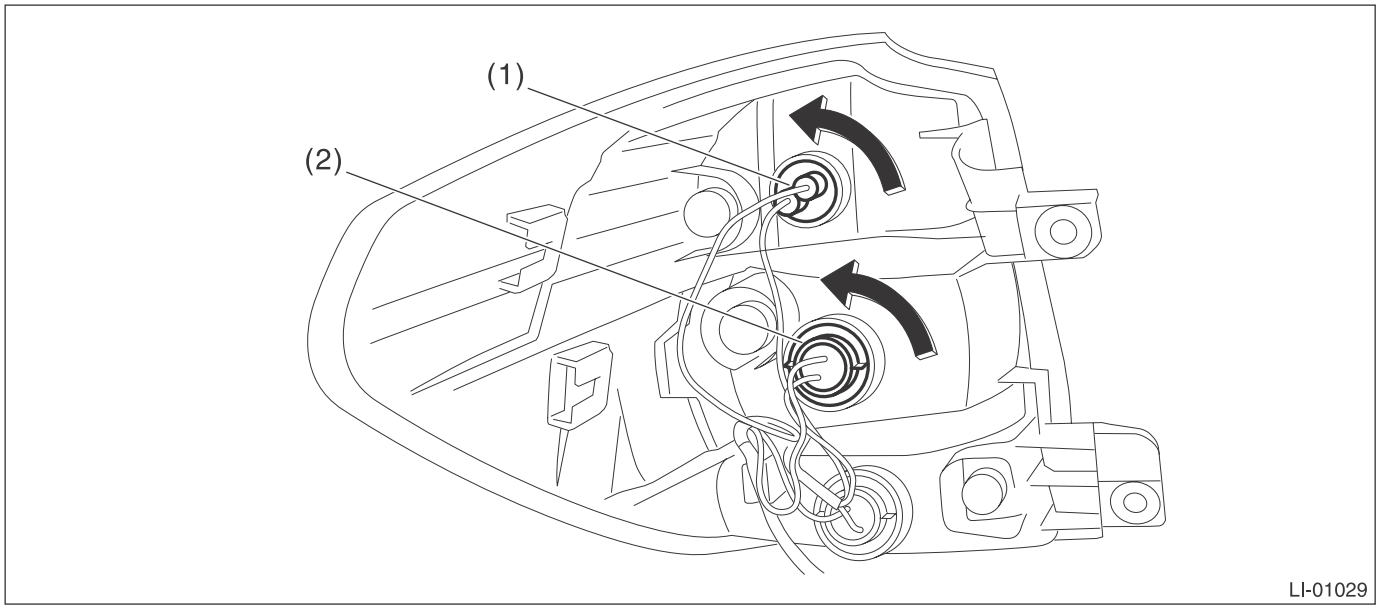

(1) Tail light bulb (2) Stop light bulb

• **Rear finisher light side**

1) Release the claws and remove the bulb inspection cover of rear gate trim

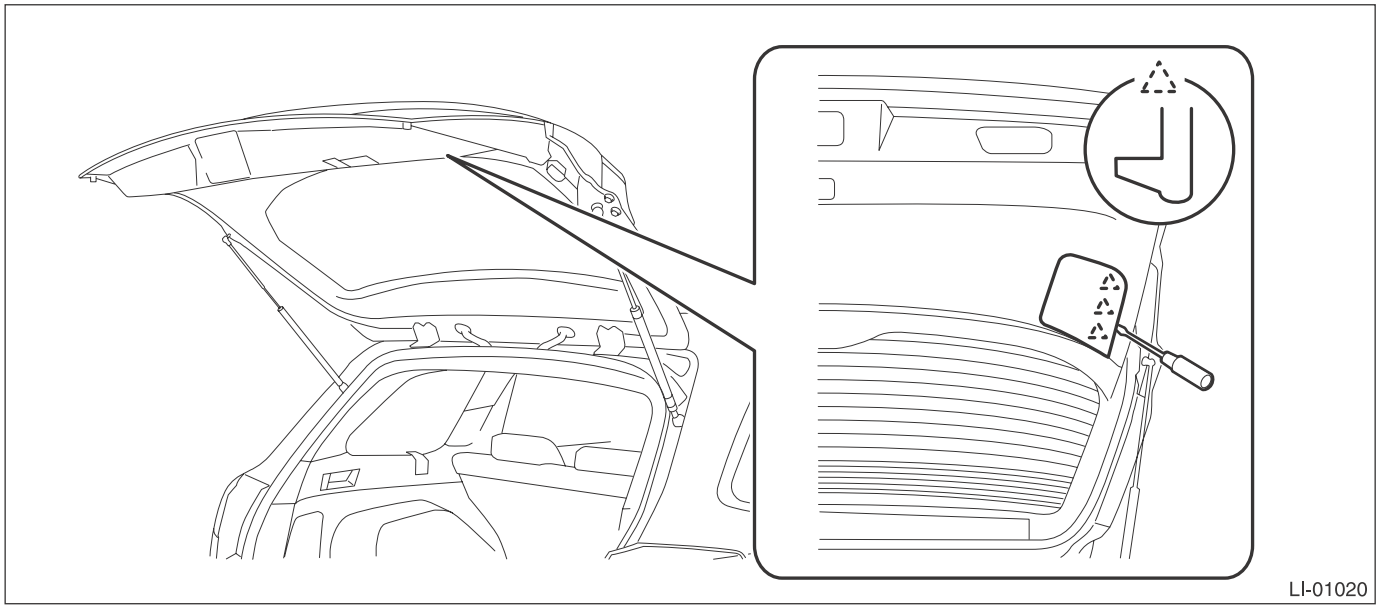

2) Remove the bulb socket and tail light bulb.

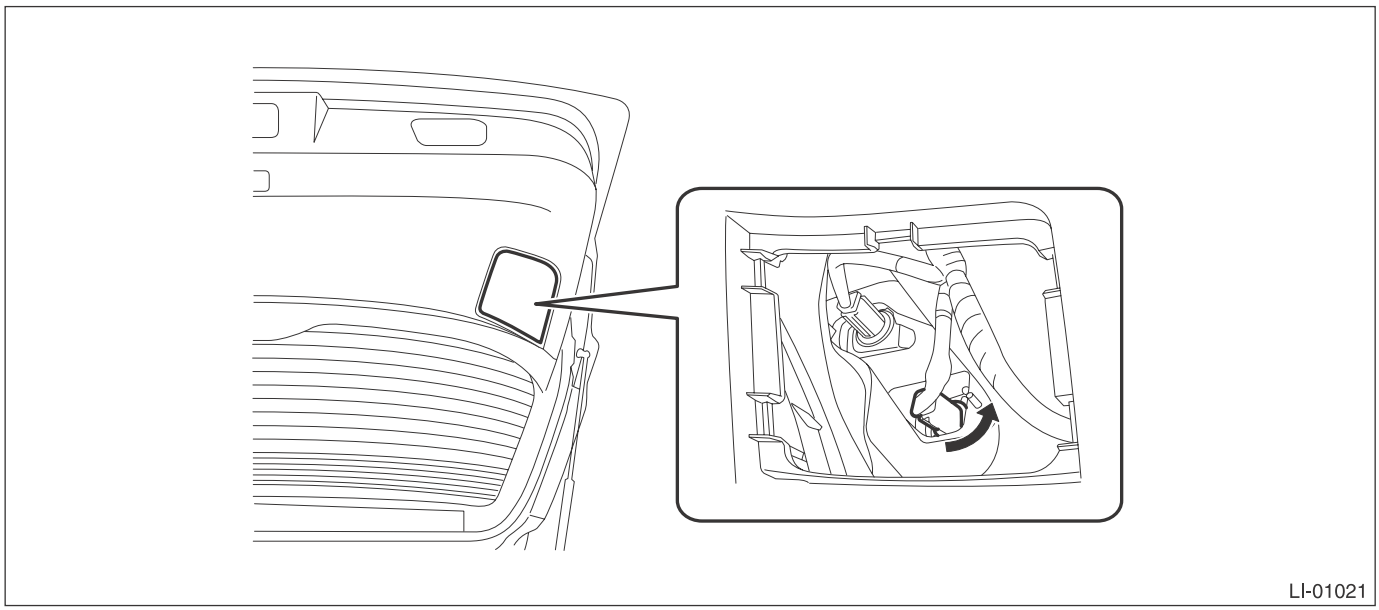

B: INSTALLATION

Install each part in the reverse order of removal.

Tightening torque:
Rear combination light ASSY: 7.5 N·m (0.76 kgf-m, 5.5 ft-lb)

C: INSPECTION

1) Visually check the bulb for blow out.
2) Check the bulb specification. <Ref. to LI-2, SPECIFICATION, General Description.>
3) If NG, replace the bulb with a new part.

23.Rear Turn Signal Light Bulb

A: REMOVAL

1. SEDAN MODEL

1) Disconnect the ground cable from battery.
2) Release the lock and remove the bulb inspection cover of trunk room trim.

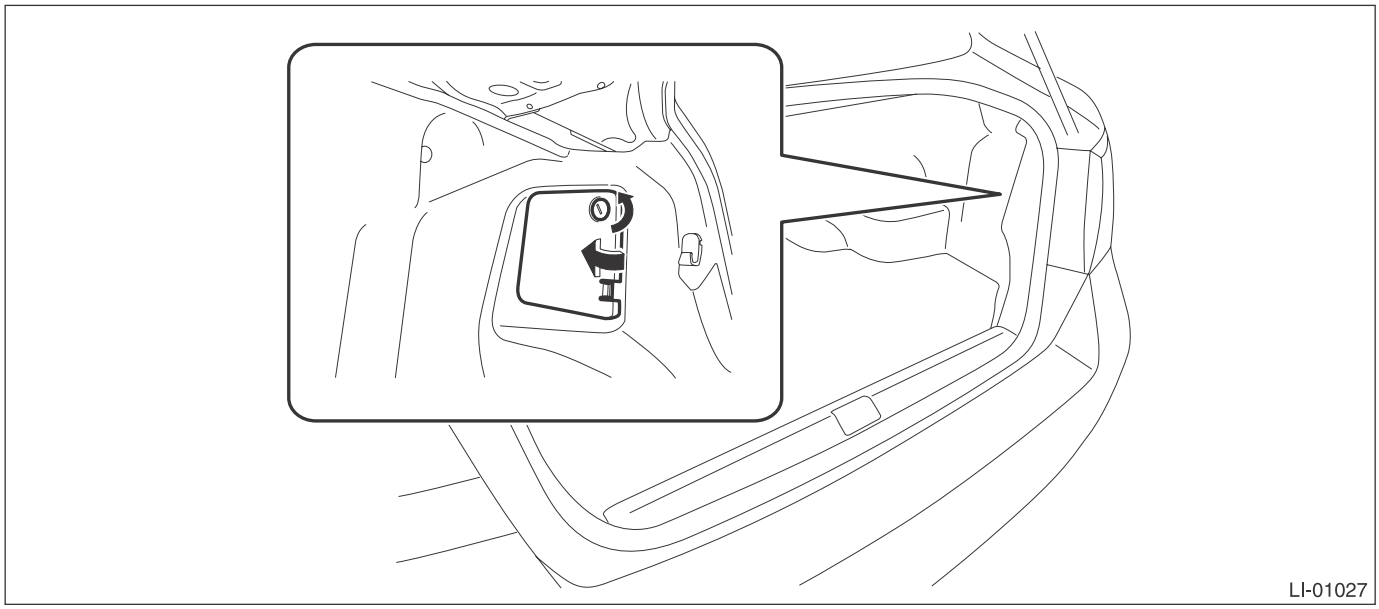

3) Remove the bulb socket and rear turn signal light bulb.

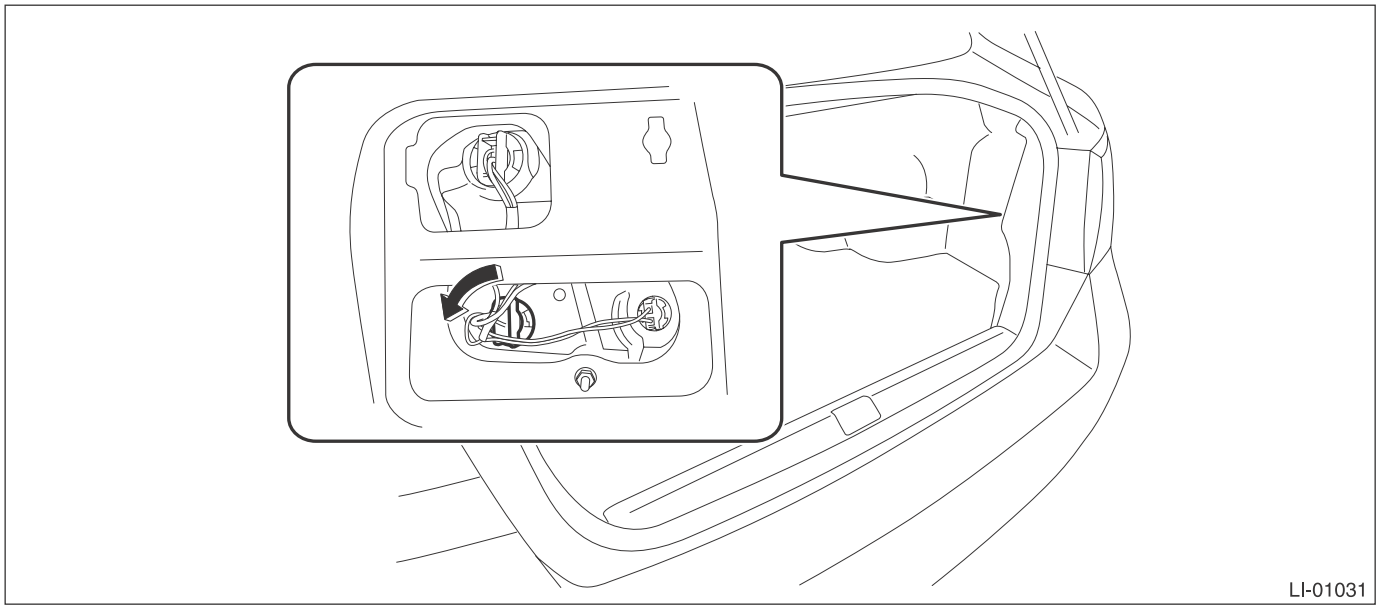

2. OUTBACK MODEL

1) Disconnect the ground cable from battery.
2) Remove the clips and detach the rear combination light covers.

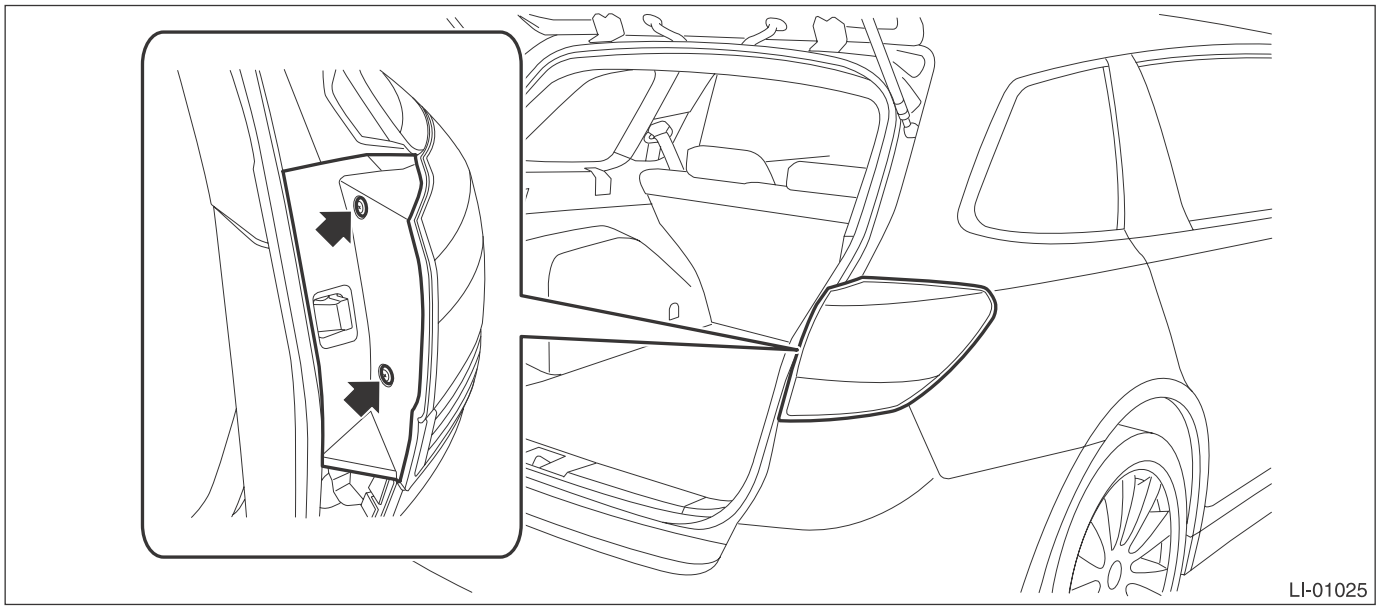

3) Remove the rear combination light assembly.

CAUTION:
Be careful not to damage the clips.

(1) Release the bolts and clips, then pull out the rear combination light assembly to the vehicle rear.
(2) Disconnect the connector and remove the rear combination light assembly.

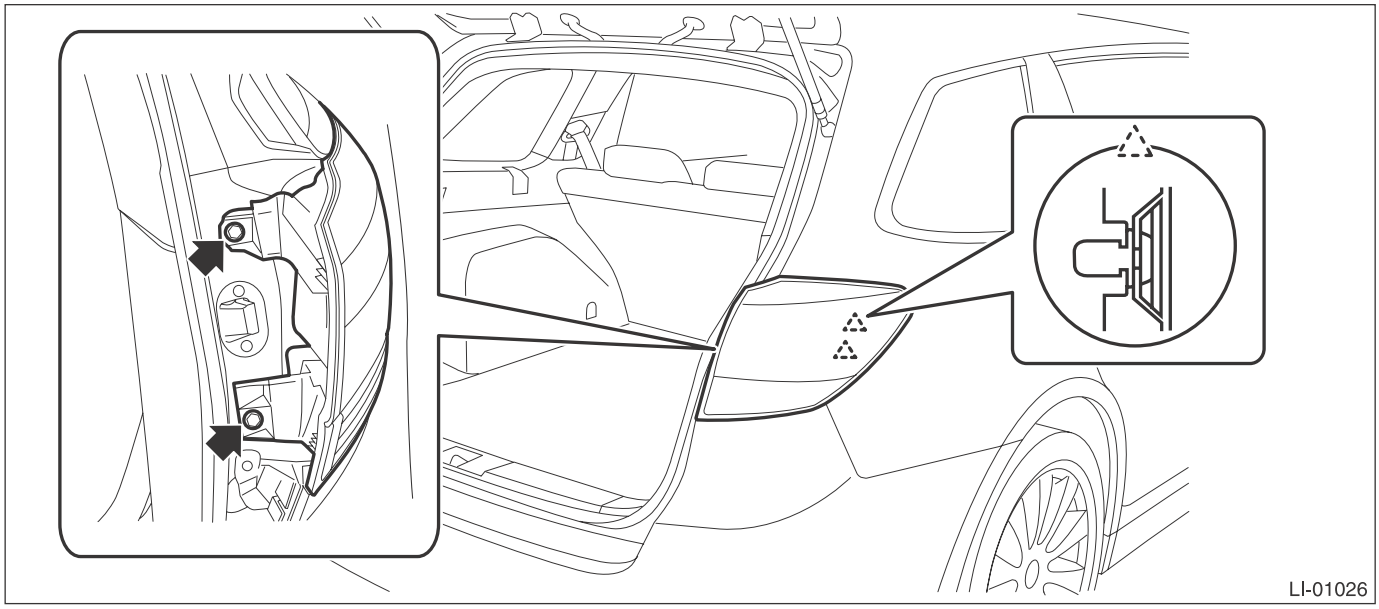

4) Remove the bulb socket and rear turn signal light bulb.

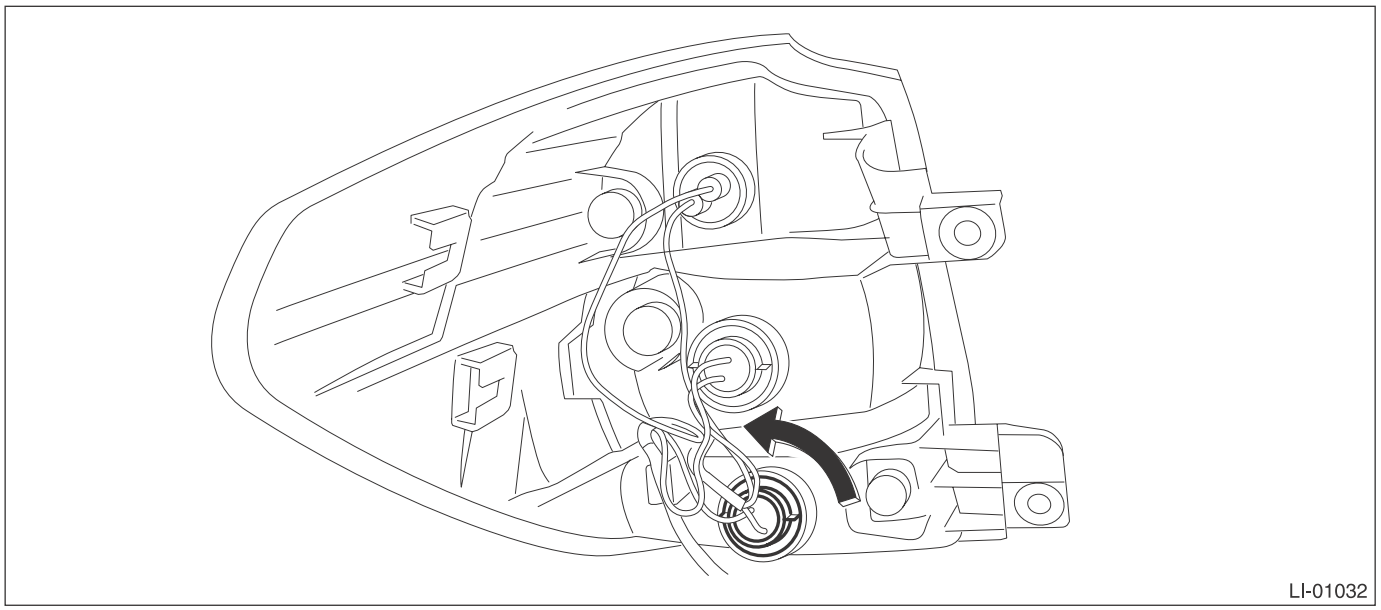

B: INSTALLATION

Install each part in the reverse order of removal.

Tightening torque:
Rear combination light ASSY: 7.5 N·m (0.76 kgf-m, 5.5 ft-lb)

C: INSPECTION

1) Visually check the bulb for blow out.
2) Check the bulb specification. <Ref. to LI-2, SPECIFICATION, General Description.>
3) If NG, replace the bulb with a new part.

24.Rear Finisher Light Assembly

A: REMOVAL

1. SEDAN MODEL

1) Disconnect the ground cable from battery.
2) Remove the trunk lid trim. <Ref. to EI-127, REMOVAL, Trunk Room Trim.>
3) Remove the rear finisher light assembly.
   (1) Disconnect the connector.
   (2) Remove the nuts and bolts and remove the rear finisher light assembly.

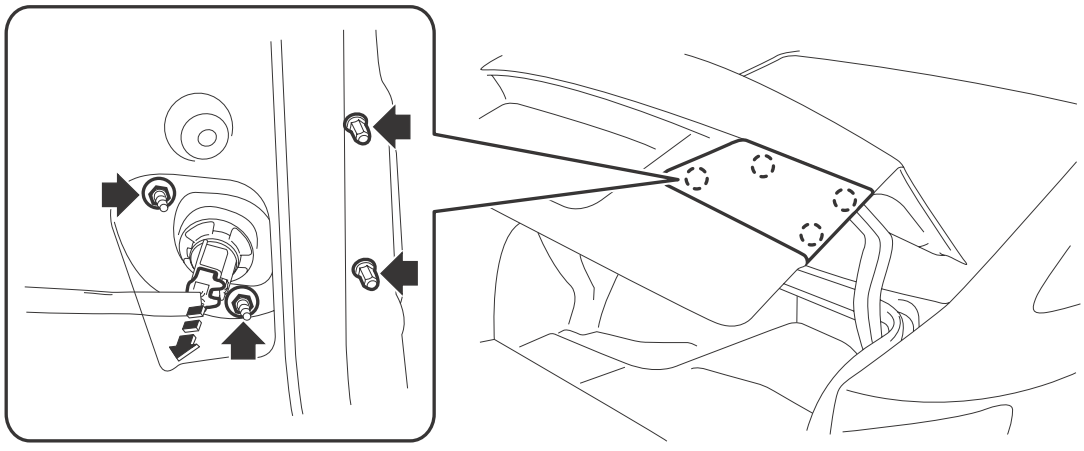
LI-01015

2. OUTBACK MODEL

1) Disconnect the ground cable from battery.
2) Remove the rear gate trim. <Ref. to EI-160, REMOVAL, Rear Gate Trim.>
3) Remove the rear gate garnish. <Ref. to EI-164, REMOVAL, Rear Gate Garnish.>
4) Release the clips and claws, then detach the rear finisher light side cover.

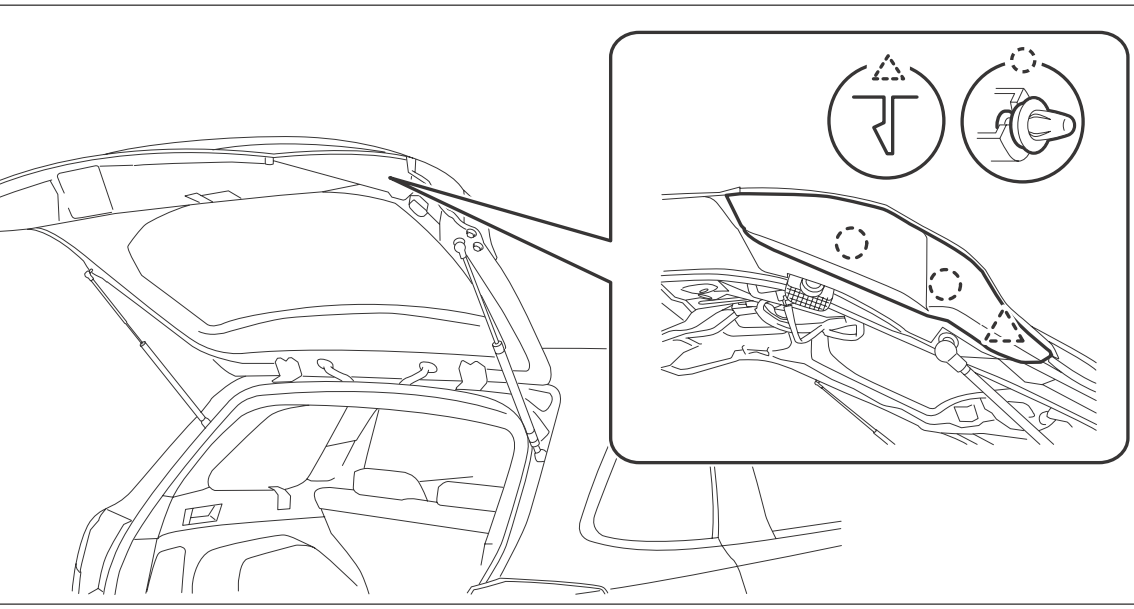
LI-01016

5) Remove the rear finisher light assembly.
   (1) Disconnect the connector.

(2) Remove the nuts and release the pin, then remove the rear finisher light assembly.

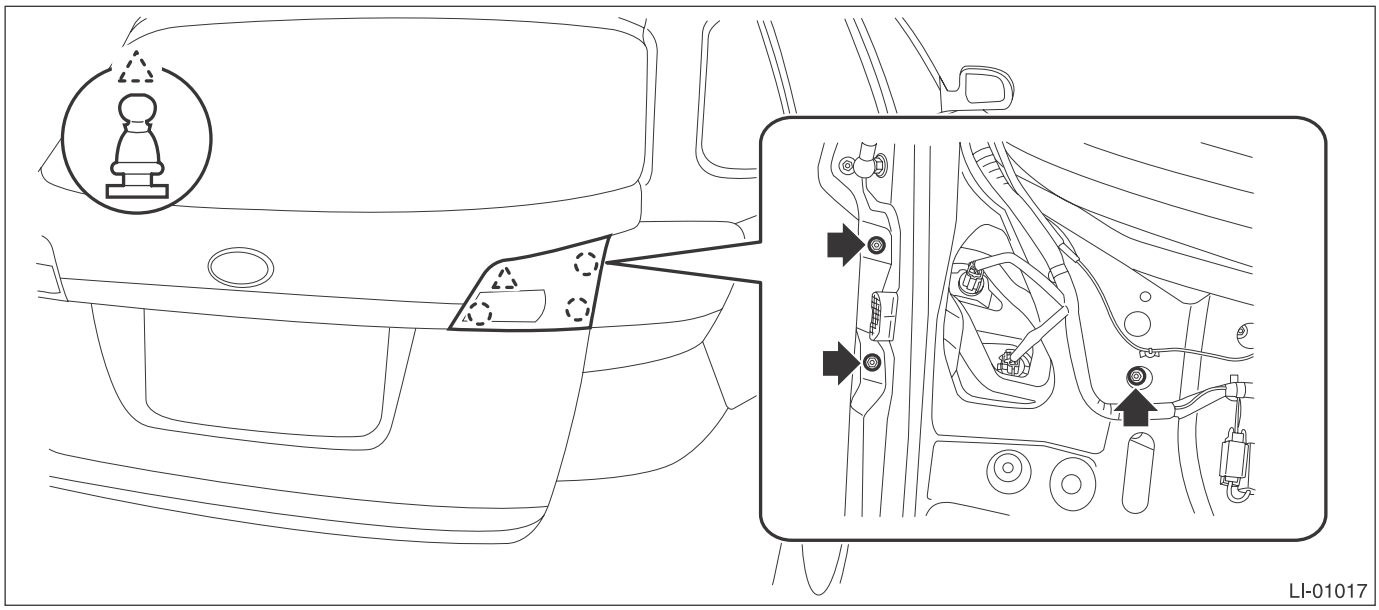

B: INSTALLATION

CAUTION:
Replace the body seal gasket with a new part.
Install each part in the reverse order of removal.

Tightening torque:
Rear finisher light assembly: 4.5 N·m (0.45 kgf-m, 3.3 ft-lb)

25.Back-up Light Bulb

A: REMOVAL

1. SEDAN MODEL

1) Disconnect the ground cable from battery.
2) Release the lock and remove the bulb inspection cover of trunk room trim.

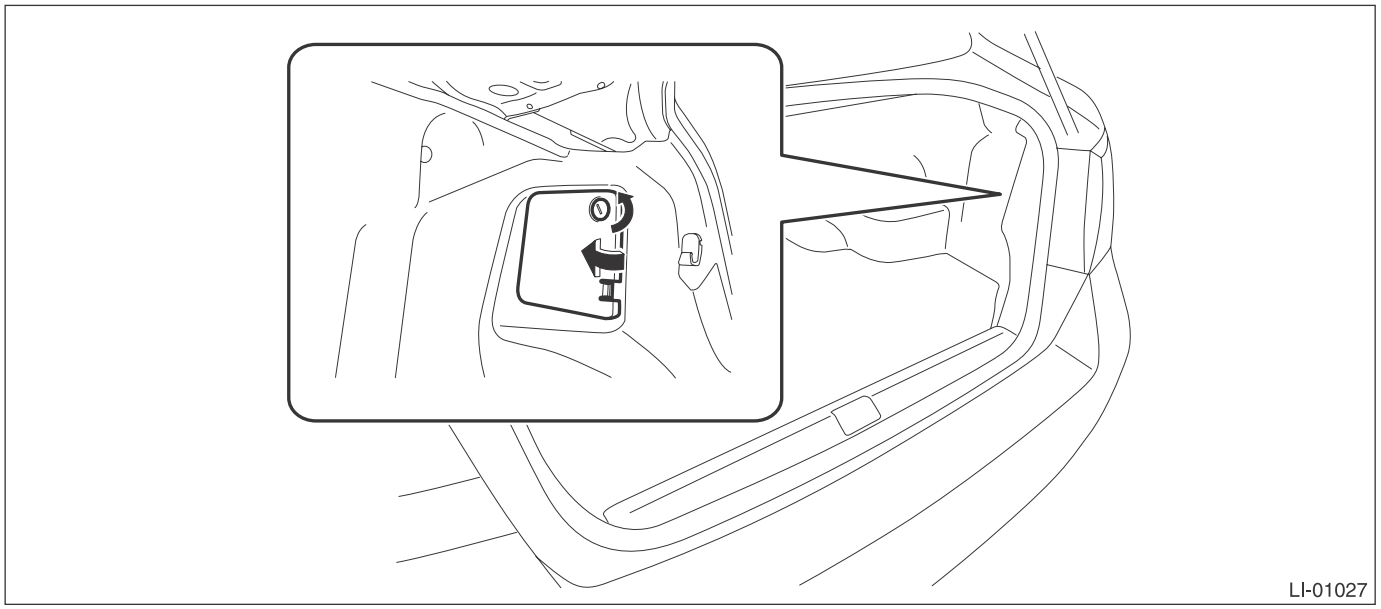

3) Remove the bulb socket and back-up light bulb.

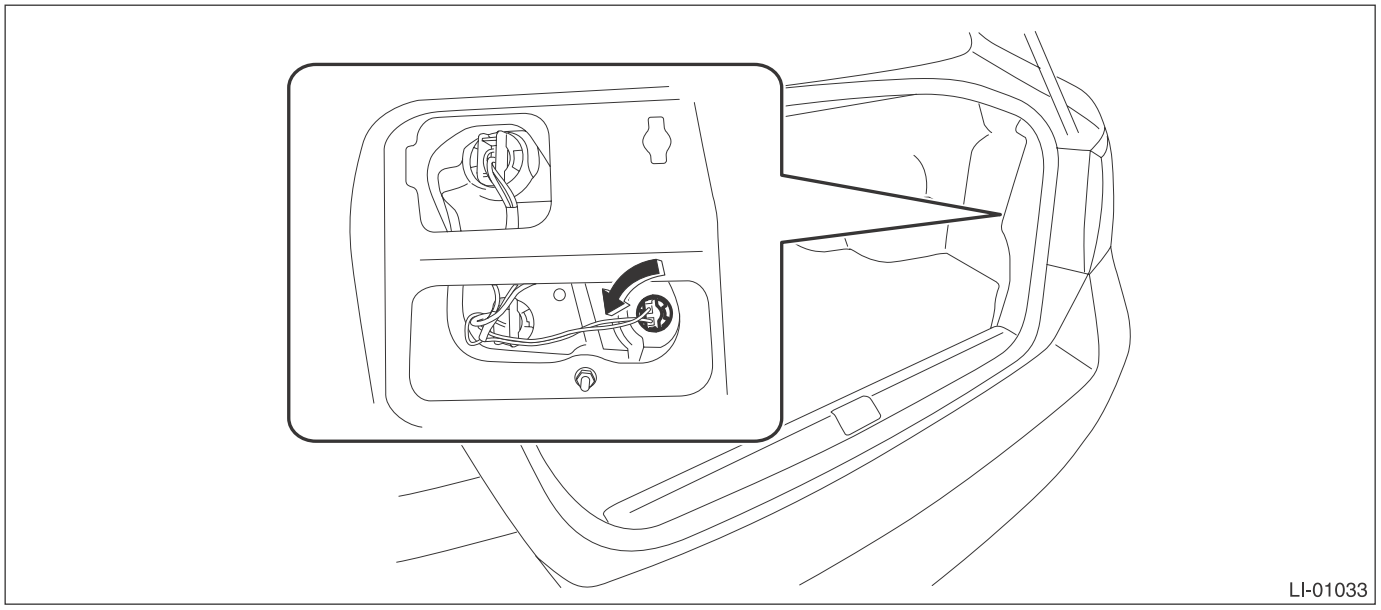

2. OUTBACK MODEL

1) Disconnect the ground cable from battery.
2) Release the claws and remove the bulb inspection cover of rear gate trim

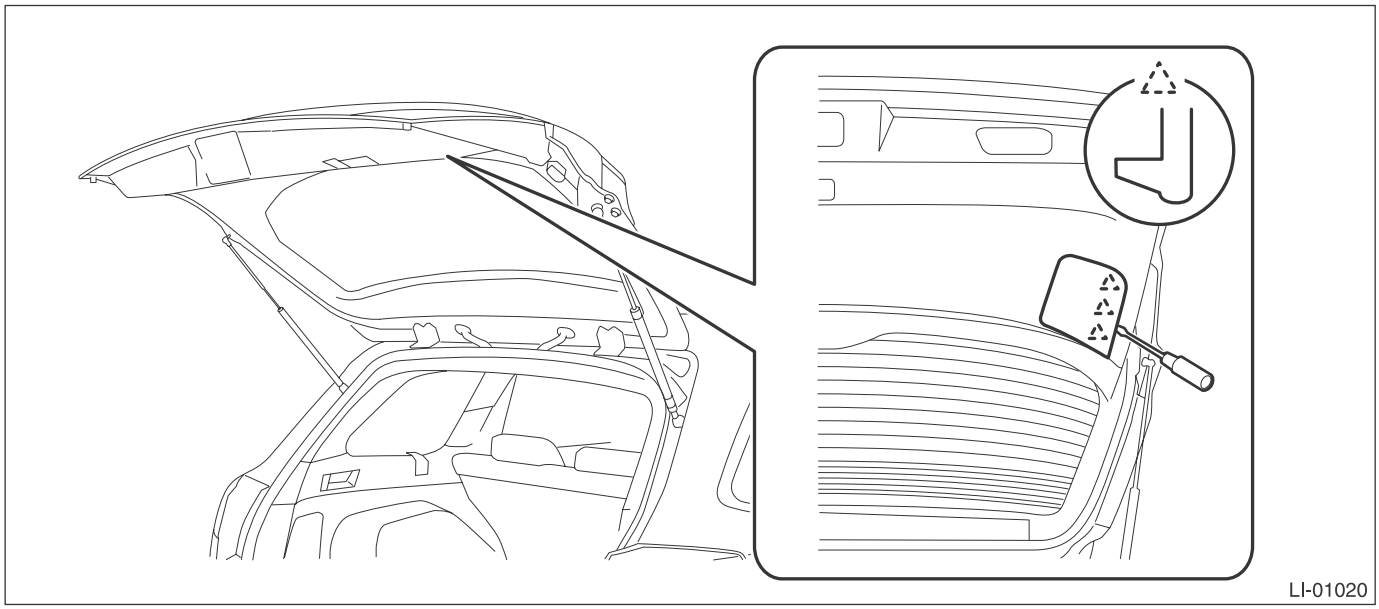

3) Remove the bulb socket and back-up light bulb.

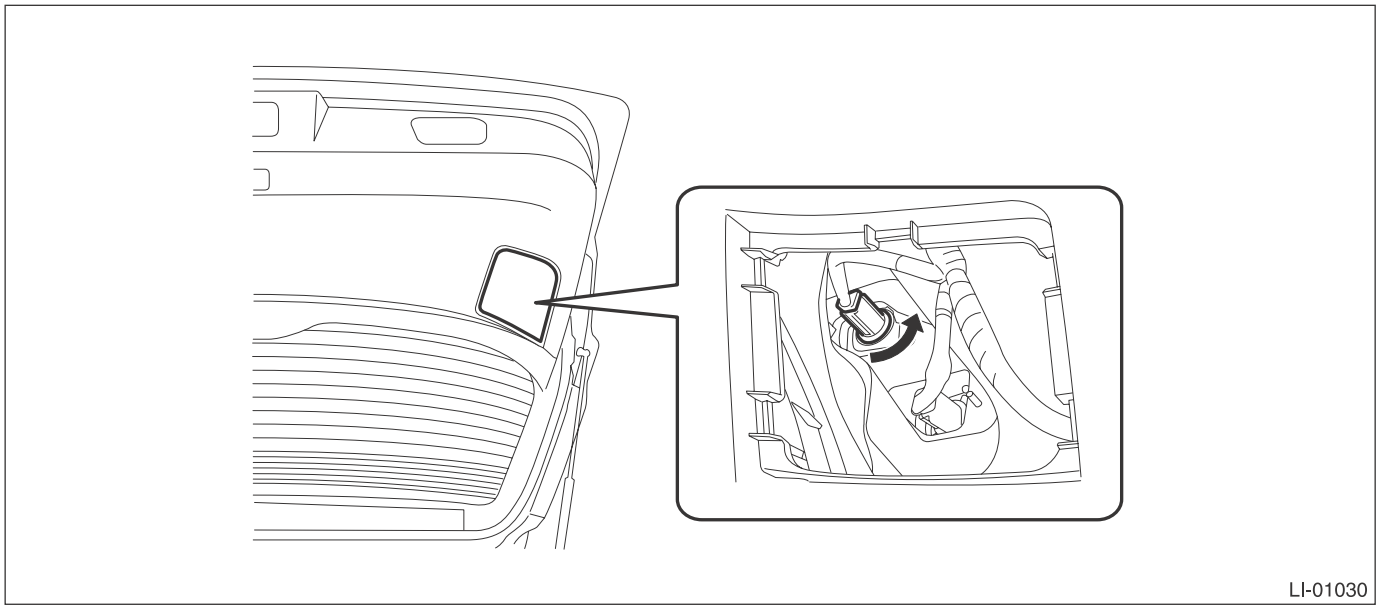

B: INSTALLATION

Install each part in the reverse order of removal.

C: INSPECTION

1) Visually check the bulb for blow out.
2) Check the bulb specification. <Ref. to LI-2, SPECIFICATION, General Description.>
3) If NG, replace the bulb with a new part.

26.License Plate Light

A: REMOVAL

1. SEDAN MODEL

1) Disconnect the ground cable from battery.
2) Remove the trunk lid trim. <Ref. to EI-127, TRUNK LID TRIM, REMOVAL, Trunk Room Trim.>
3) Remove the trunk lid garnish. <Ref. to EI-163, REMOVAL, Trunk Lid Garnish.>
4) Disconnect the connector and remove the bulb socket.

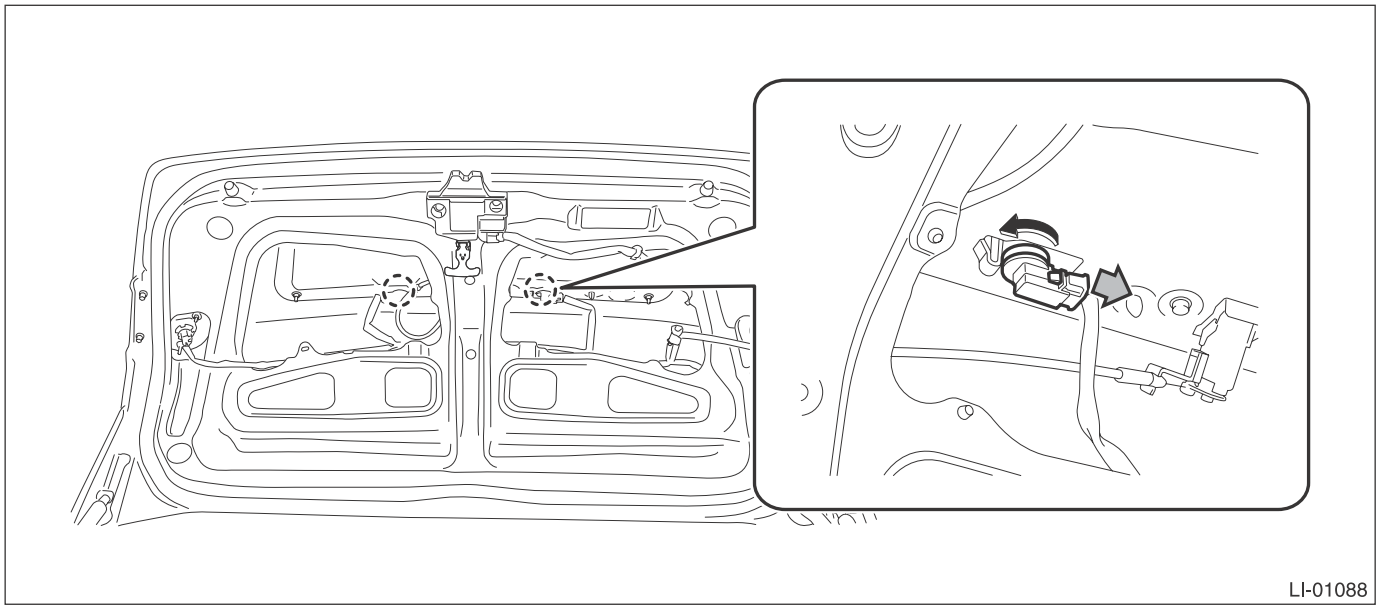

5) Remove the license plate light.

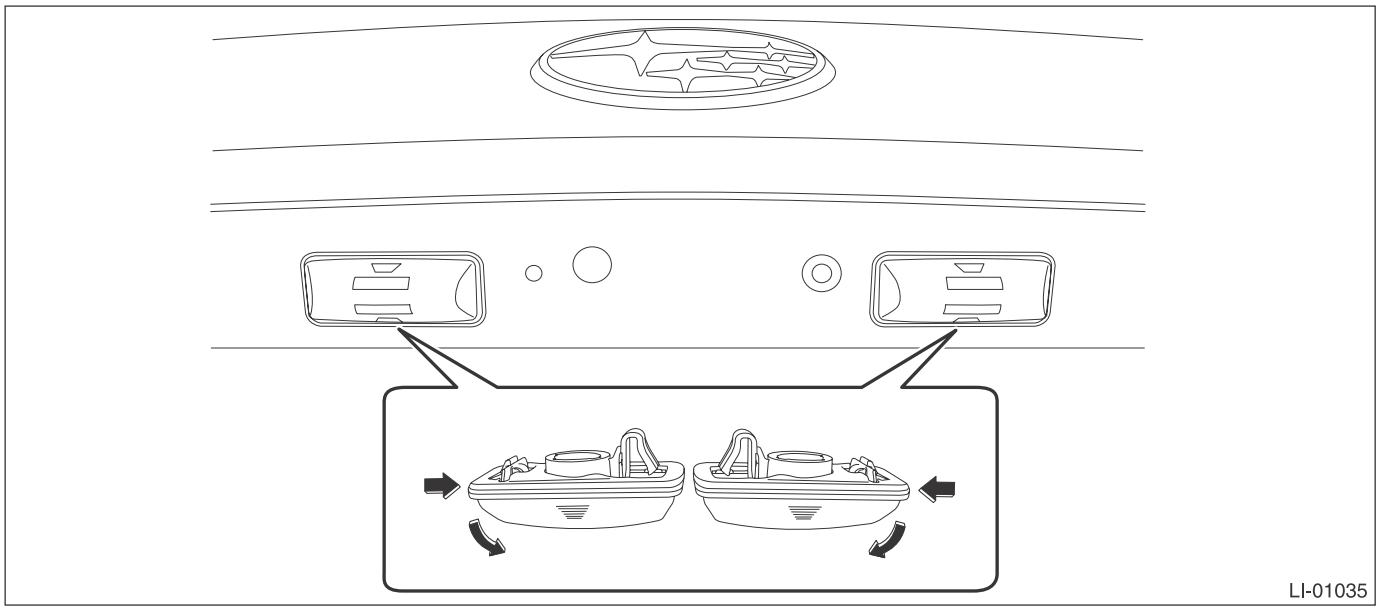

2. OUTBACK MODEL

1) Disconnect the ground cable from battery.
2) Remove the screws and remove the license plate light.

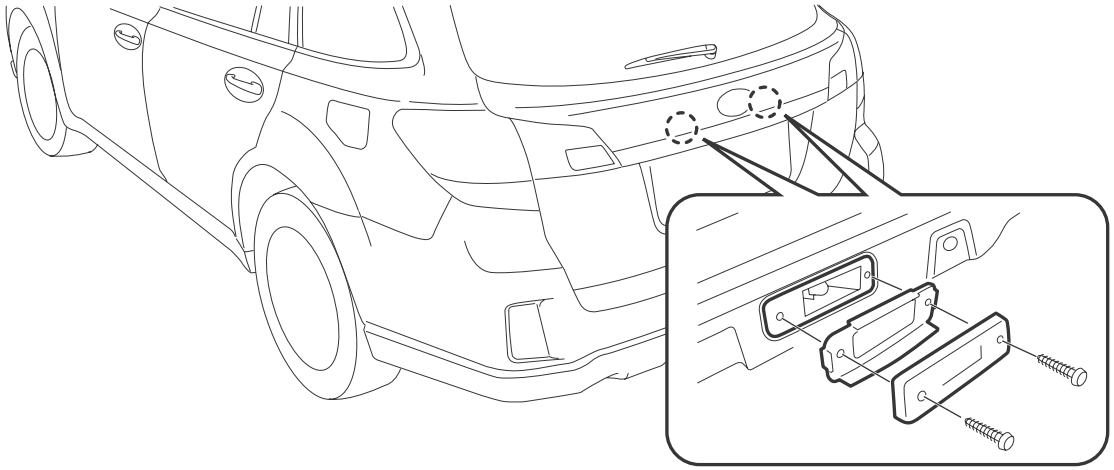

NOTE:
When removing the license plate light assembly harness, remove the following parts.
- Rear gate garnish:<Ref. to EI-164, REMOVAL, Rear Gate Garnish.>
- Rear gate opener button:<Ref. to SL-44, REMOVAL, Rear Gate Opener Button.>

B: INSTALLATION

Install each part in the reverse order of removal.

C: INSPECTION

1) Visually check the bulb for blow out.
2) Check the bulb specification. <Ref. to LI-2, SPECIFICATION, General Description.>
3) If NG, replace the bulb with a new part.

27.High-mounted Stop Light

A: REMOVAL

1. SEDAN MODEL

1) Disconnect the ground cable from battery.
2) Remove the rear shelf trim. <Ref. to EI-120, REMOVAL, Rear Shelf Trim.>
3) Remove the high-mounted stop light.
   (1) Disconnect the connector.
   (2) Remove the lock washers and remove the high-mounted stop light.

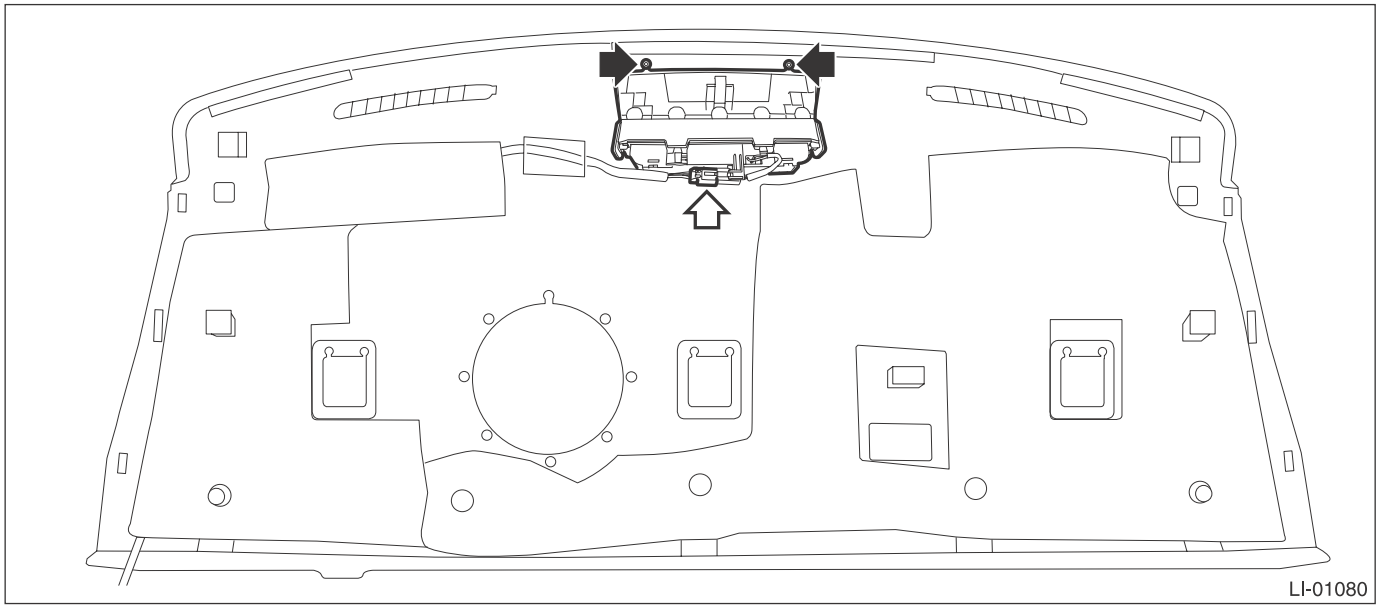

2. OUTBACK MODEL

1) Disconnect the ground cable from battery.
2) Remove the rear gate upper trim.
   (1) Release the claws in the trim end.
   (2) Disconnect the claws in the center of trim, and remove the rear gate upper trim.

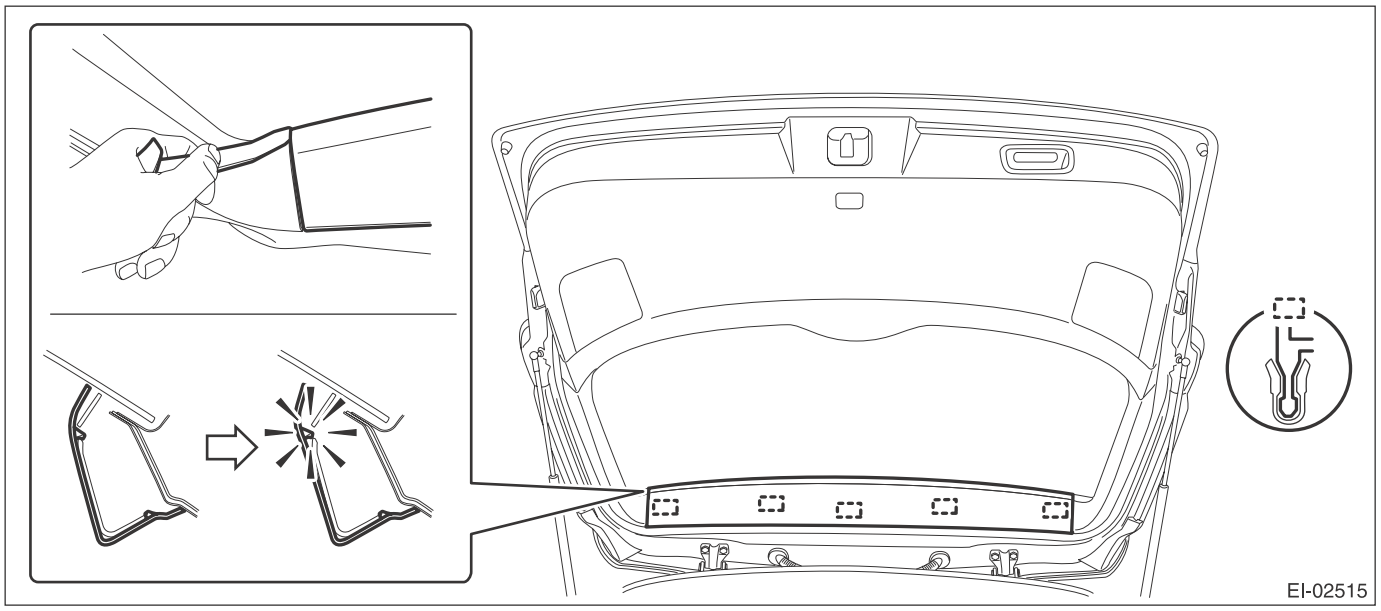

3) Remove the high-mounted stop light.

(1) Remove the nuts and take out the high-mounted stop light toward vehicle rear.

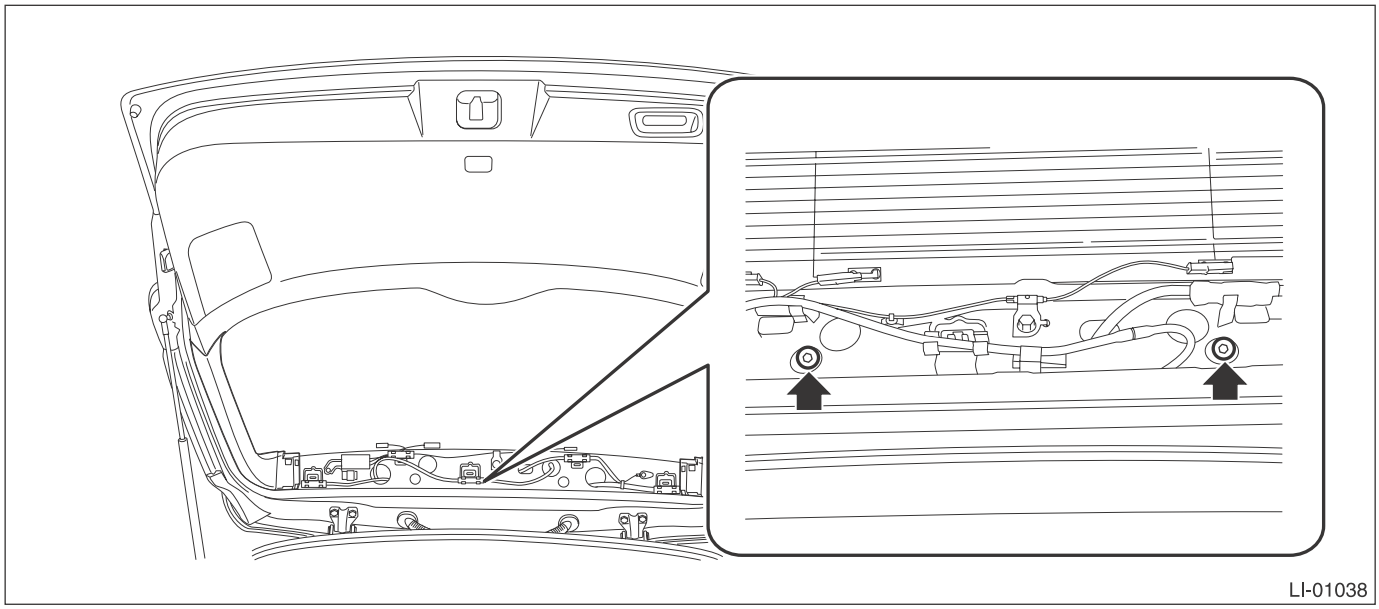
LI-01038

(2) Disconnect the connector and remove the high-mounted stop light.

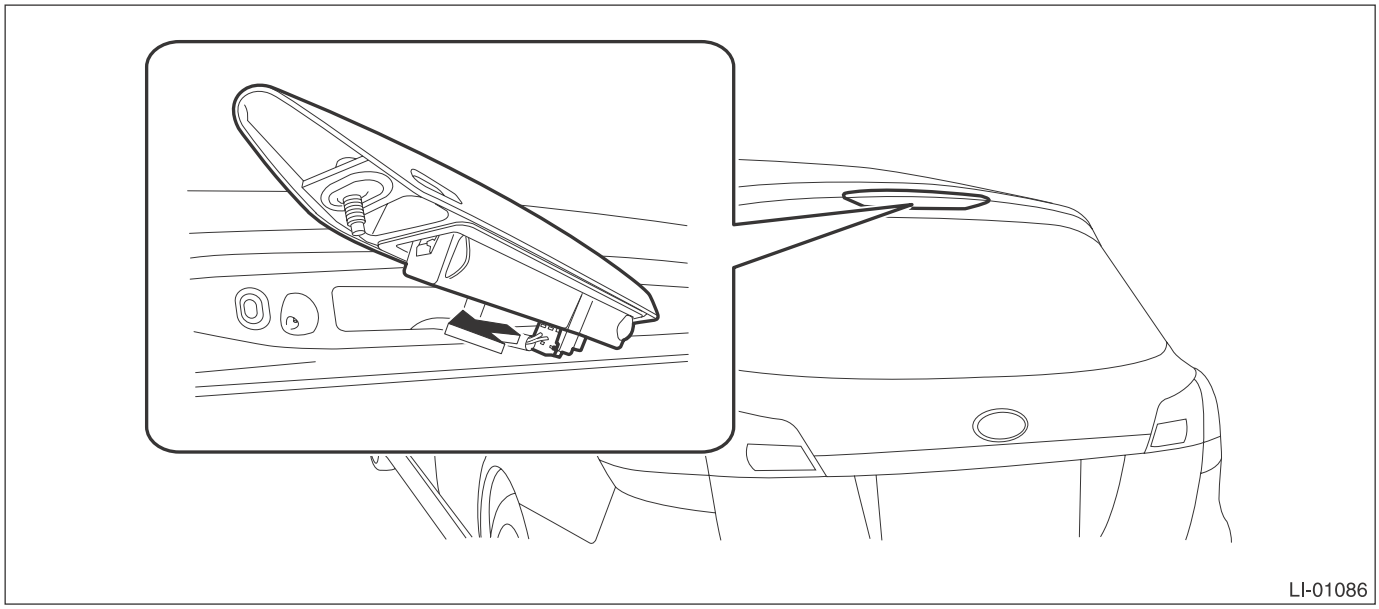
LI-01086

B: INSTALLATION

Install each part in the reverse order of removal.

Tightening torque:
High-mounted stop light: 4.5 N·m (0.46 kgf-m, 3.3 ft-lb)

C: INSPECTION

1) Install the high-mounted stop light to test if it illuminates normally.
2) If the high-mounted stop light does not illuminate, replace it with a new part.

NOTE:
Since LED (Light Emitting Diode) is used for the high-mounted stop light, replace the high-mounted stop light assembly if the LED burns out.

28.Spot Map Light

A: REMOVAL

NOTE:
The spot map light is a single unit with the overhead console.
1) Disconnect the ground cable from battery.
2) Remove the overhead console assembly.
   (1) Push and open the rear end of the overhead console lid, and remove the screws.
   (2) Remove the clips and pull out the overhead console to disconnect the connectors.

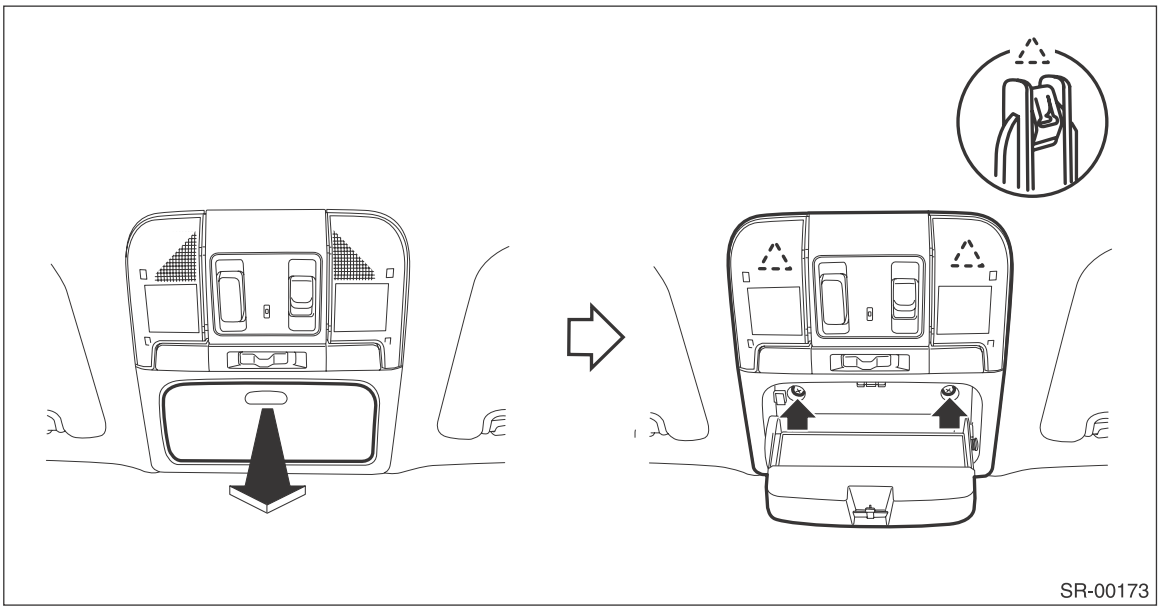

3) Release the claws, then detach the spot map light cover and bulb.

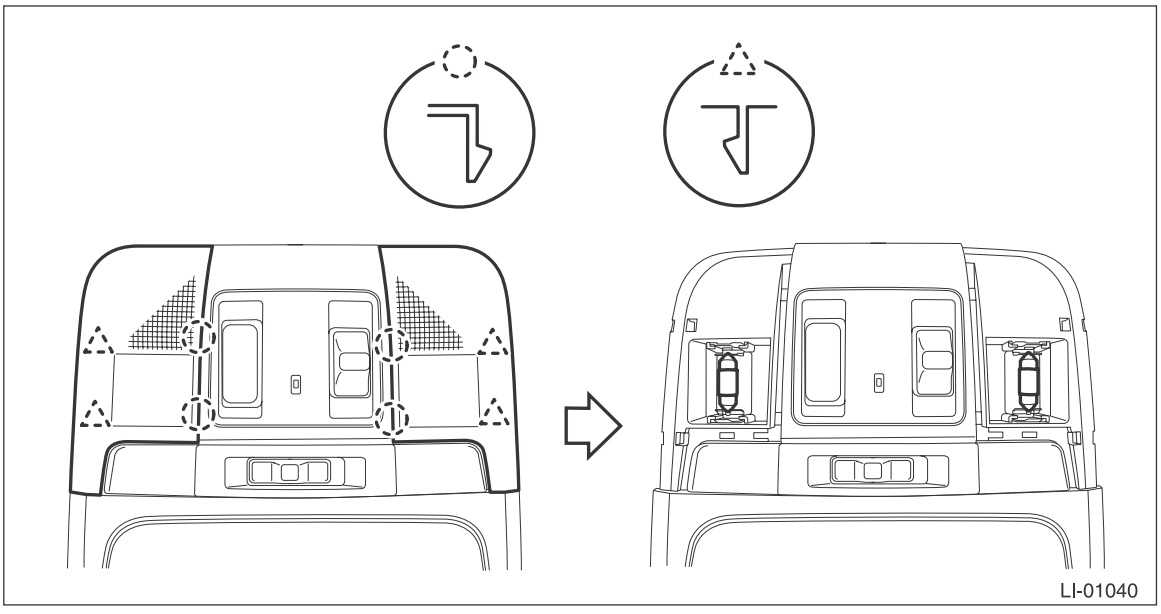

B: INSTALLATION

Install each part in the reverse order of removal.

C: INSPECTION

1. SPOT MAP LIGHT BULB

1) Visually check the bulb for blow out.
2) Check the bulb specification. <Ref. to LI-2, SPECIFICATION, General Description.>
3) Replace the bulb if it is found defective.

2. SPOT MAP LIGHT SWITCH

1) Remove the overhead console assembly.
2) Measure the resistance between spot map light switch terminals.

Preparation tool: Circuit tester

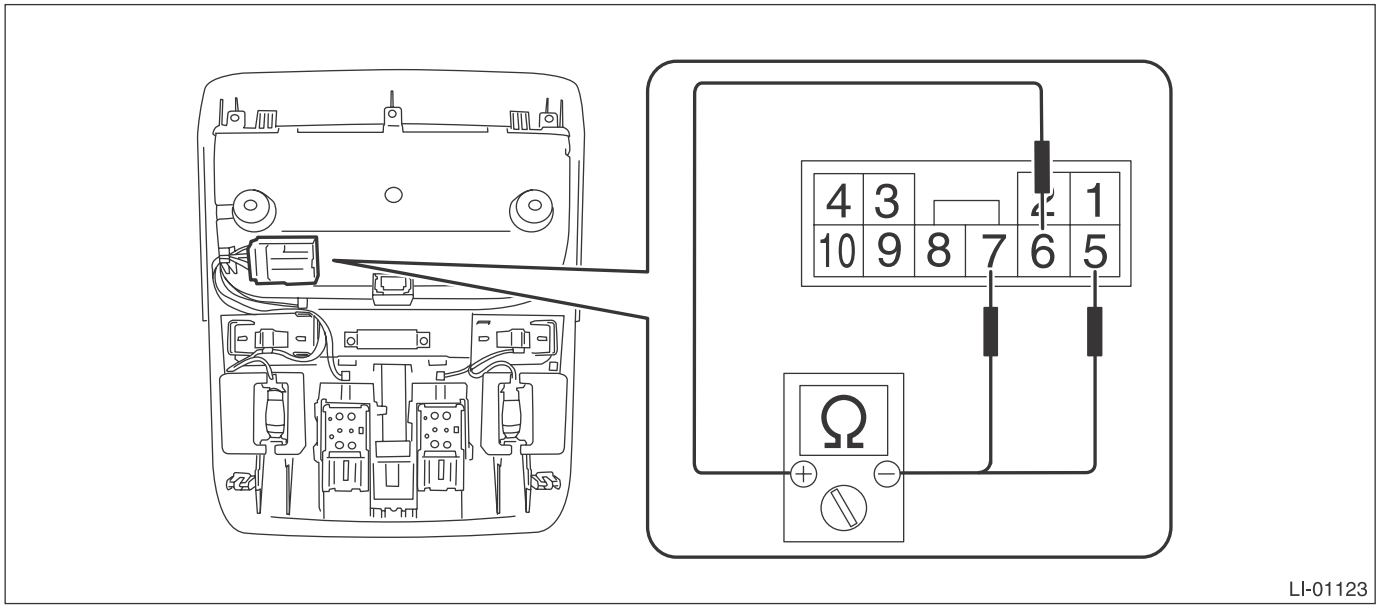

Terminal No.	Inspection Conditions	Specification
—	Switch OFF	1 MΩ or more
6 — 5	Switch ON	Less than 1 Ω
6 — 7	Switch door	Less than 1 Ω

3) Replace the overhead console assembly if the inspection result is not within the standard value.

3. OVERHEAD CONSOLE ILLUMINATION LIGHT BULB

NOTE:
Since LEDs (Light Emitting Diode) are used for the overhead console illumination light bulb, replace the overhead console assembly if an LED burns out.

29.Room Light

A: REMOVAL

1) Disconnect the ground cable from battery.
2) Remove the room light.
   (1) Release the claws and remove the cover.
   (2) Remove the screws.

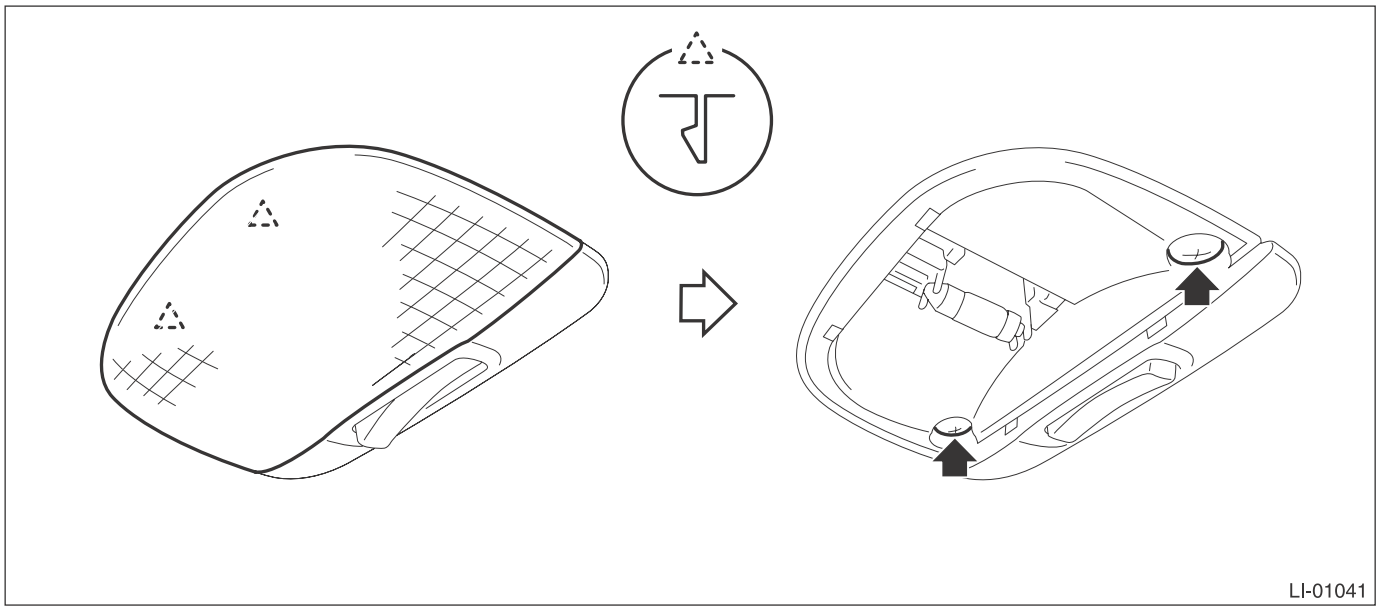

   (3) Disconnect the connector and remove the room light and bulb.

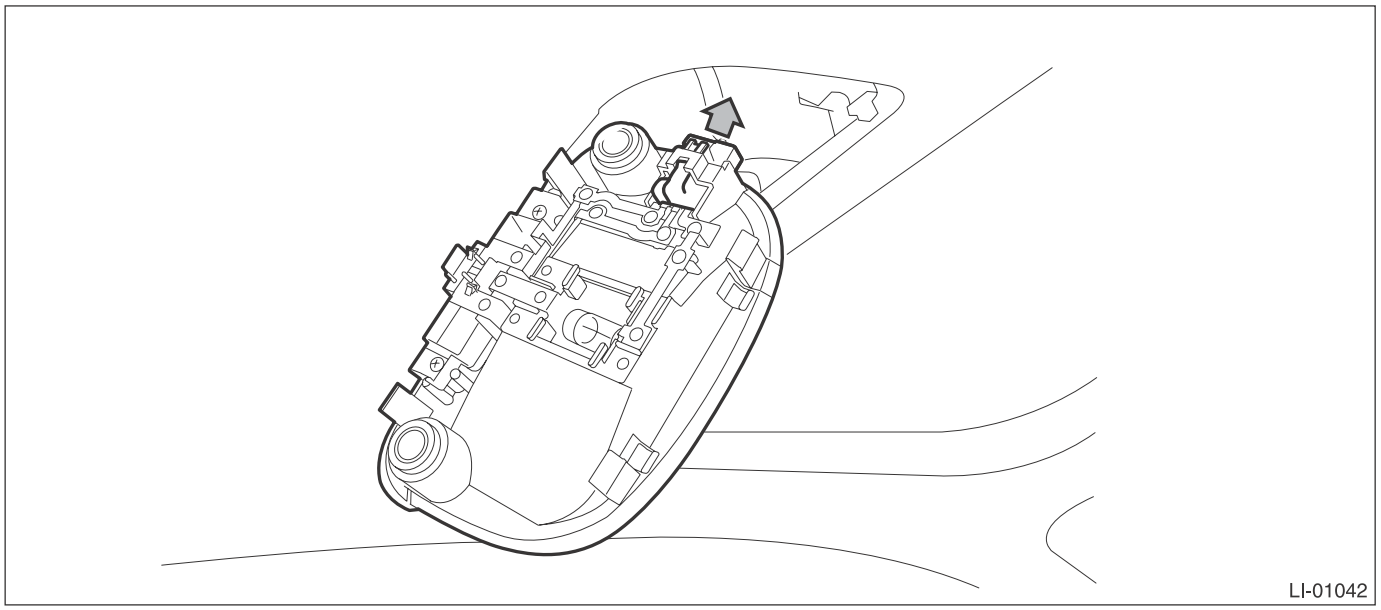

B: INSTALLATION

Install each part in the reverse order of removal.

C: INSPECTION

1. ROOM LIGHT BULB

1) Visually check the bulb for blow out.
2) Check the bulb specification. <Ref. to LI-2, SPECIFICATION, General Description.>
3) If NG, replace the bulb with a new part.

2. ROOM LIGHT SWITCH

1) Remove the room light.
2) Measure the resistance between room light switch terminals.

Preparation tool: Circuit tester

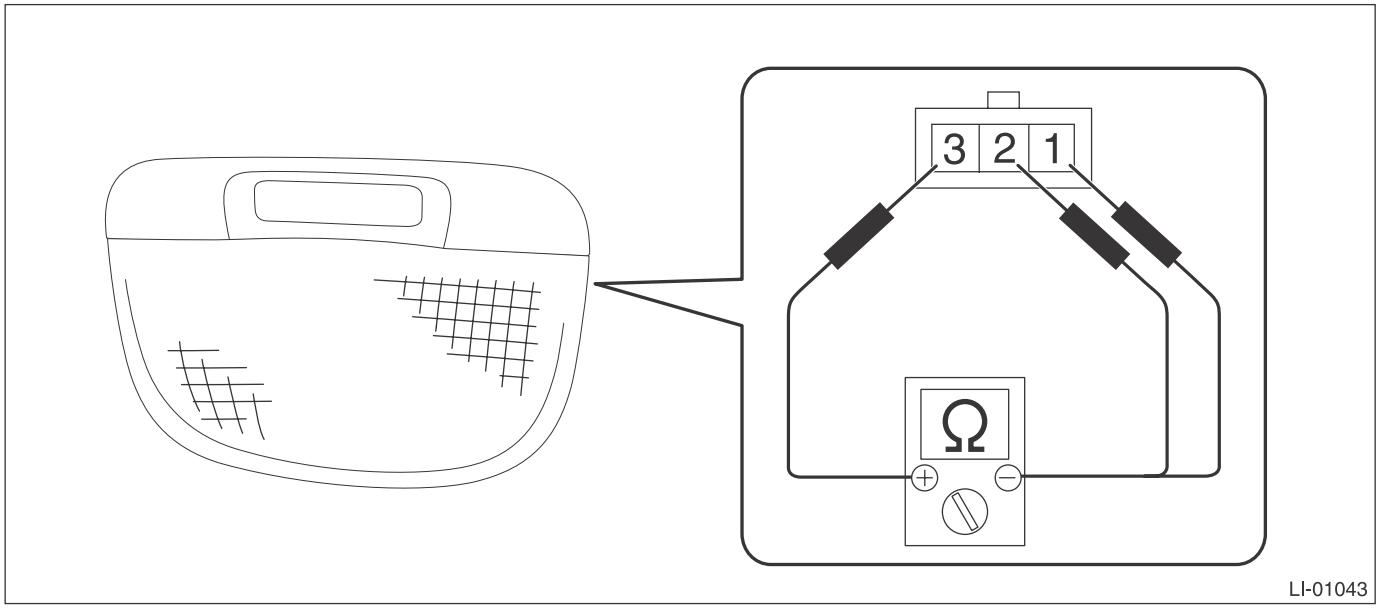

Terminal No.	Inspection Conditions	Specification
—	Switch OFF	1 MΩ or more
1 — 3	Switch ON	Less than 1 Ω
2 — 3	Switch door	Less than 1 Ω

3) Apply battery voltage to check the lighting condition of room light.

Terminal No.	Inspection Conditions	Specification
3 (+) — 1,2 (–)	Switch OFF	Light OFF
	Switch ON	Light ON
	Switch door	Light ON

4) Replace the spot map light switch if the inspection result is not within the standard value.

30.Luggage Room Light

A: REMOVAL

1) Disconnect the ground cable from battery.
2) Remove the luggage room light.
   (1) Release the claws and remove the luggage room light main body.
   (2) Disconnect the connector and remove the luggage room light.

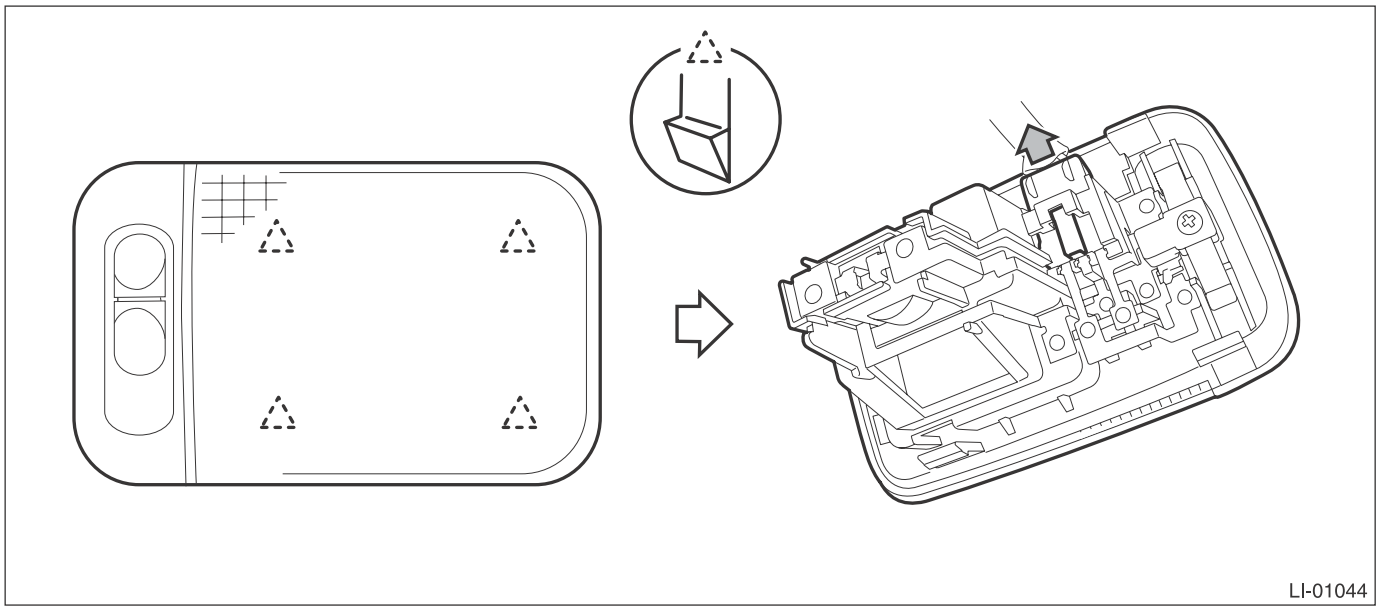

3) Release the claws, and detach the luggage room light cover and bulb.

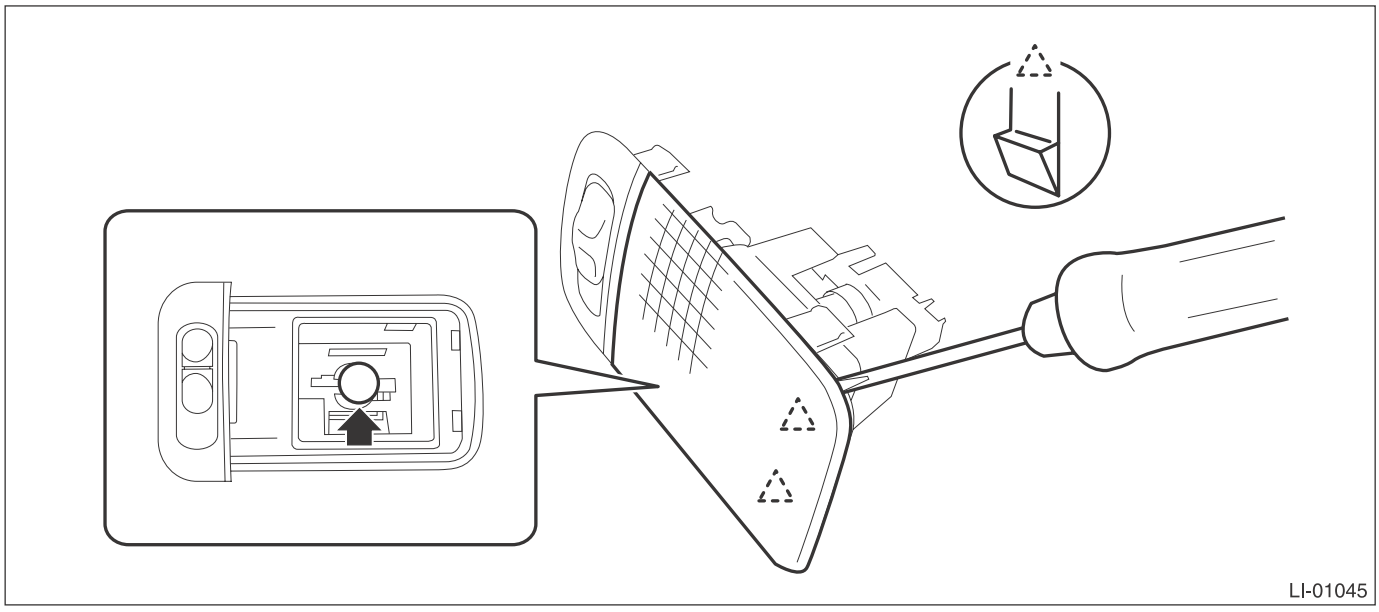

B: INSTALLATION

Install each part in the reverse order of removal.

C: INSPECTION

1. LUGGAGE ROOM LIGHT BULB

1) Visually check the bulb for blow out.
2) Check the bulb specification. <Ref. to LI-2, SPECIFICATION, General Description.>
3) If NG, replace the bulb with a new part.

2. LUGGAGE ROOM LIGHT SWITCH

1) Remove the luggage room light.
2) Measure the resistance between luggage room light switch terminals.

Preparation tool: Circuit tester

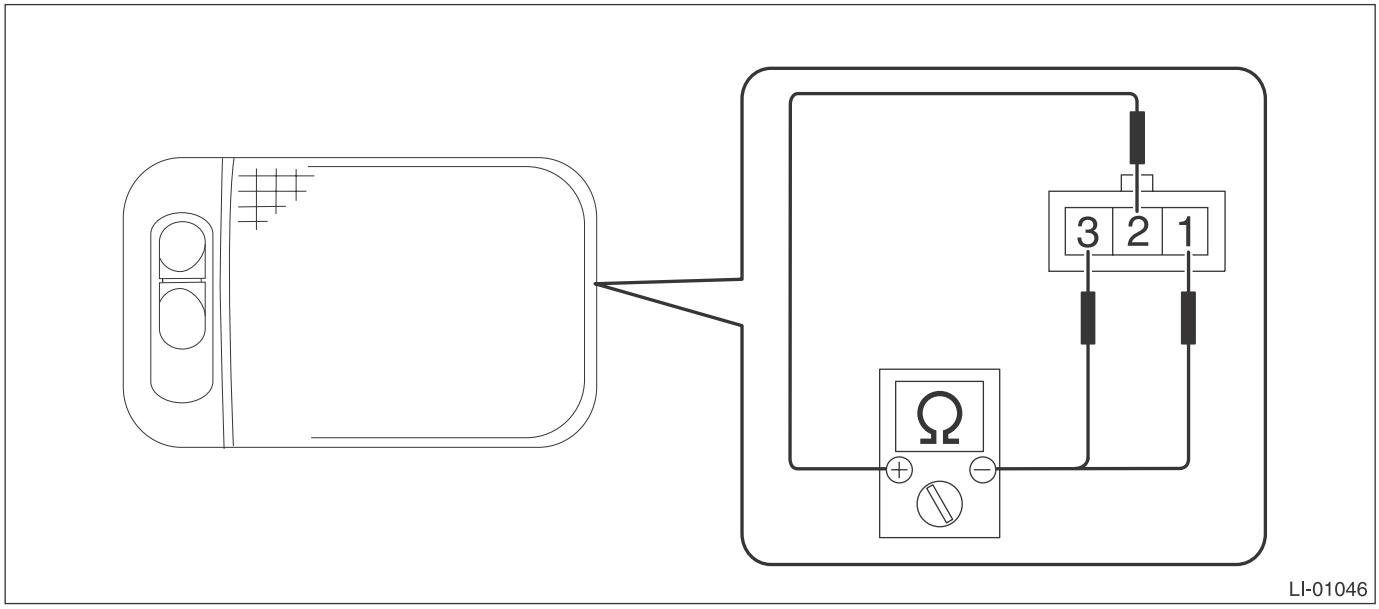

Terminal No.	Inspection Conditions	Specification
—	Switch OFF	1 MΩ or more
1 — 2	Switch ON	Less than 1 Ω
2 — 3	Switch door	Less than 1 Ω

3) Replace the luggage room light if the inspection result is not within the standard value.

31.Trunk Room Light

A: REMOVAL

1) Disconnect the ground cable from battery.
2) Remove the trunk room light
   (1) Disconnect the connector.
   (2) Turn the trunk room light counterclockwise to 60° and remove the light.

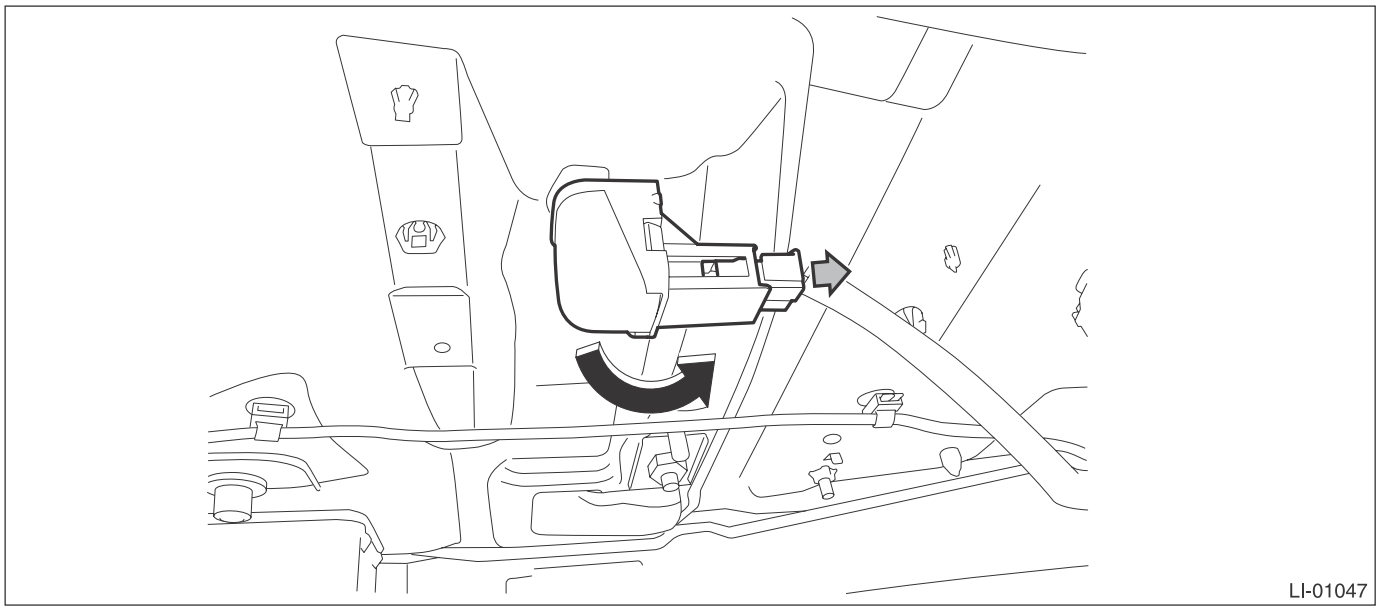

3) Release the claws, and detach the trunk room light cover and bulb.

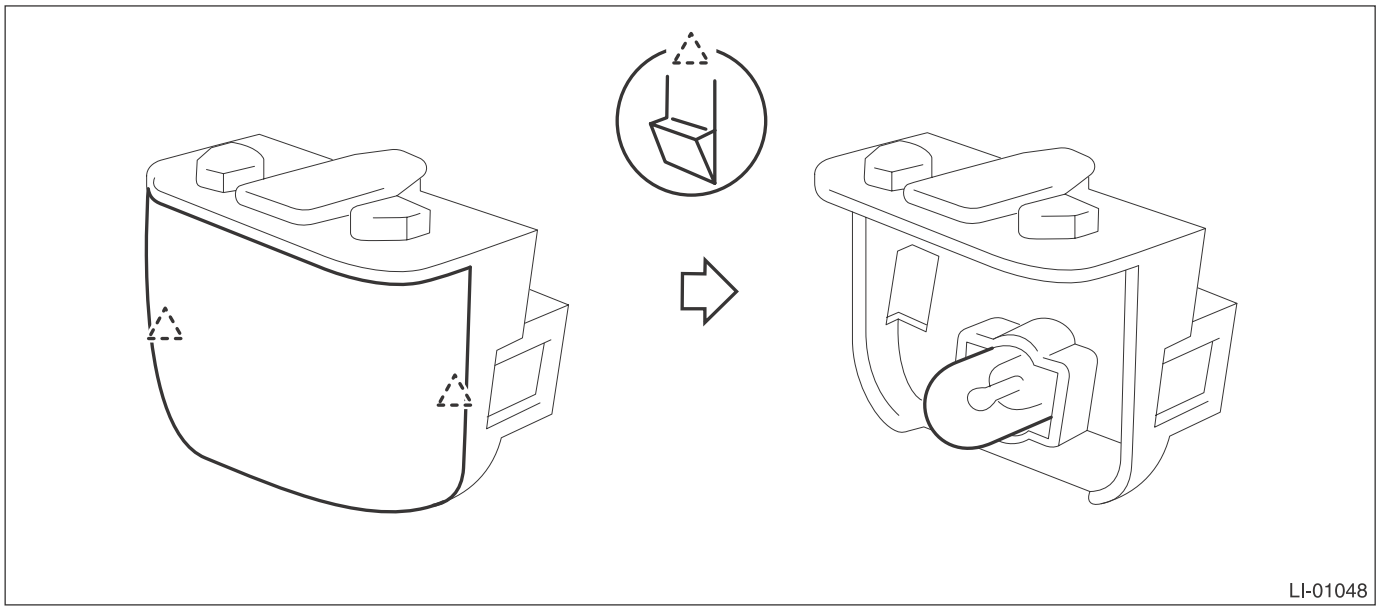

B: INSTALLATION

Install each part in the reverse order of removal.

C: INSPECTION

1) Visually check the bulb for blow out.
2) Check the bulb specification. <Ref. to LI-2, SPECIFICATION, General Description.>
3) If NG, replace the bulb with a new part.

32.Glove Box Light

A: REMOVAL

1) Disconnect the ground cable from battery.
2) Remove the glove box. <Ref. to EI-65, REMOVAL, Glove Box.>
3) Remove the glove box light from the glove box back panel.

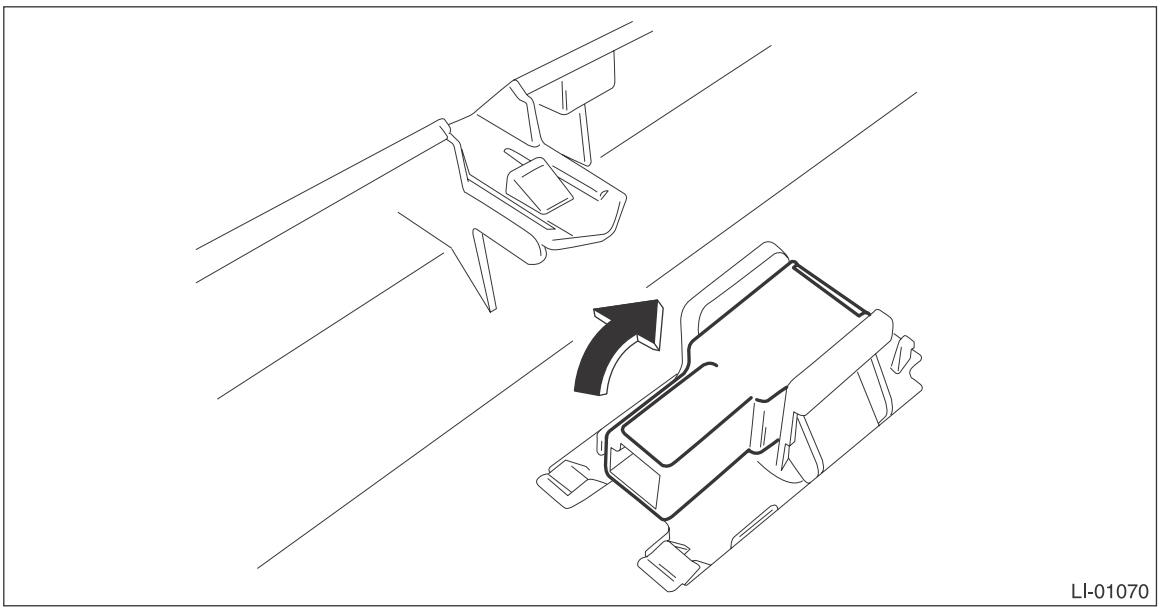

B: INSTALLATION

Install each part in the reverse order of removal.

C: INSPECTION

1) Install the glove box light and test if it illuminates normally.
2) If it is found not to illuminate normally, replace the glove box light with a new part.

NOTE:
Since LED (Light Emitting Diode) is used for the glove box light, replace the glove box light assembly if the LED burns out.

33. Door Step Light

A: REMOVAL

1) Disconnect the ground cable from battery.
2) Remove the door step light.

CAUTION:
Be careful not to damage light and door trim.

(1) Insert a flat tip screwdriver into the slit of the door step light to release the claw.
(2) Disconnect the connector and remove the door step light.

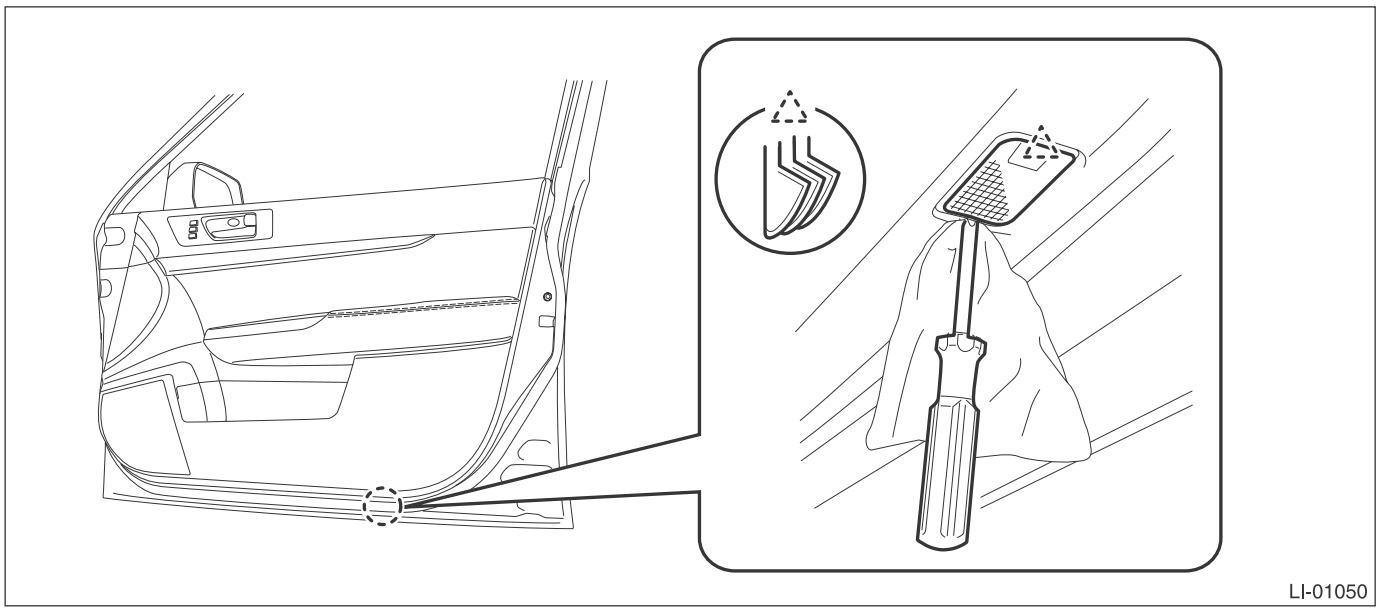

B: INSTALLATION

Install each part in the reverse order of removal.

C: INSPECTION

1) Visually check the bulb for blow out.
2) Check the bulb specification. <Ref. to LI-2, SPECIFICATION, General Description.>
3) If NG, replace the bulb with a new part.

34.Ignition Switch Illumination

A: REMOVAL

1) Disconnect the ground cable from battery.
2) Remove the steering column cover.
   (1) Remove the screws by turning the steering wheel to right and left.

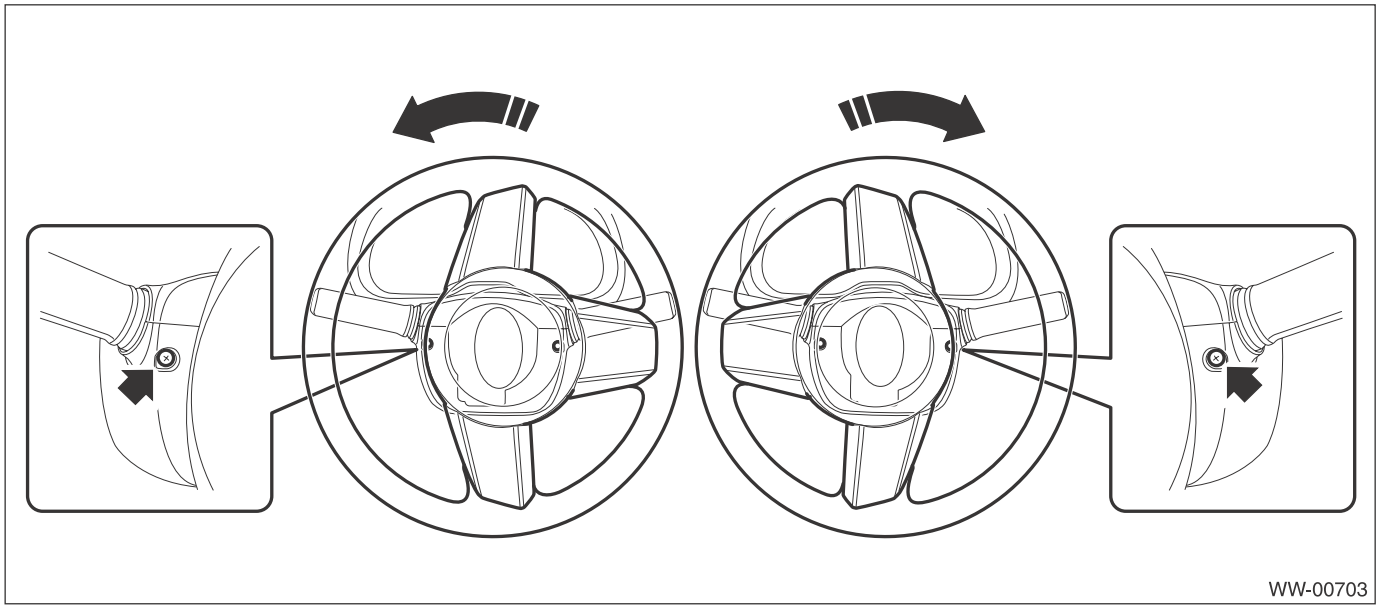

   (2) Release the claws and remove the steering column lower cover.

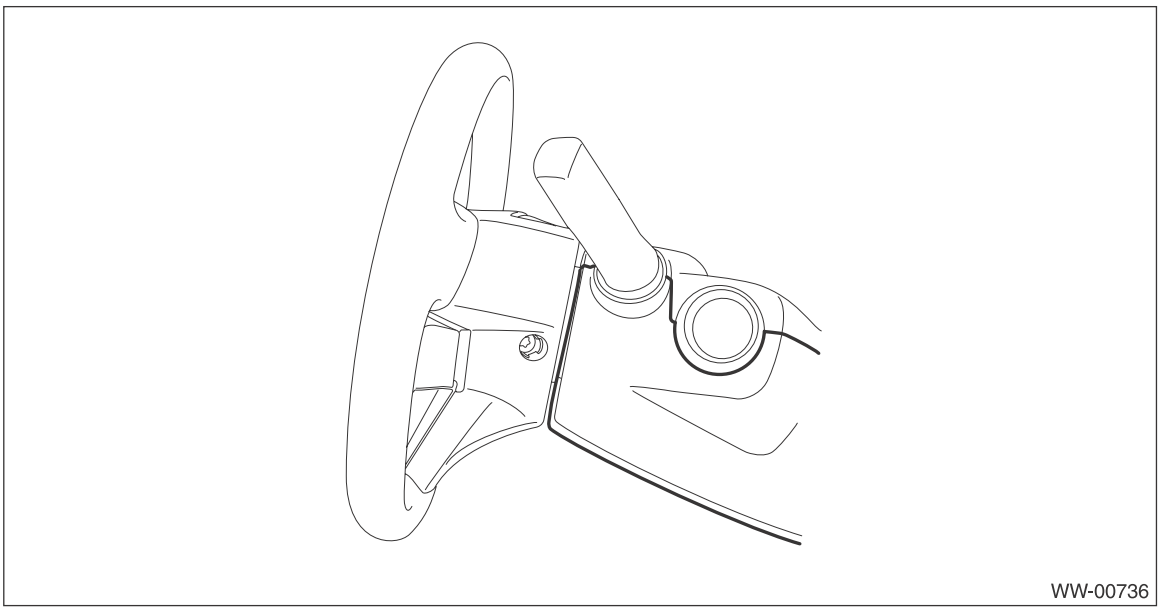

(3) Separate the steering column upper cover and steering upper cover, and remove the steering column upper cover.

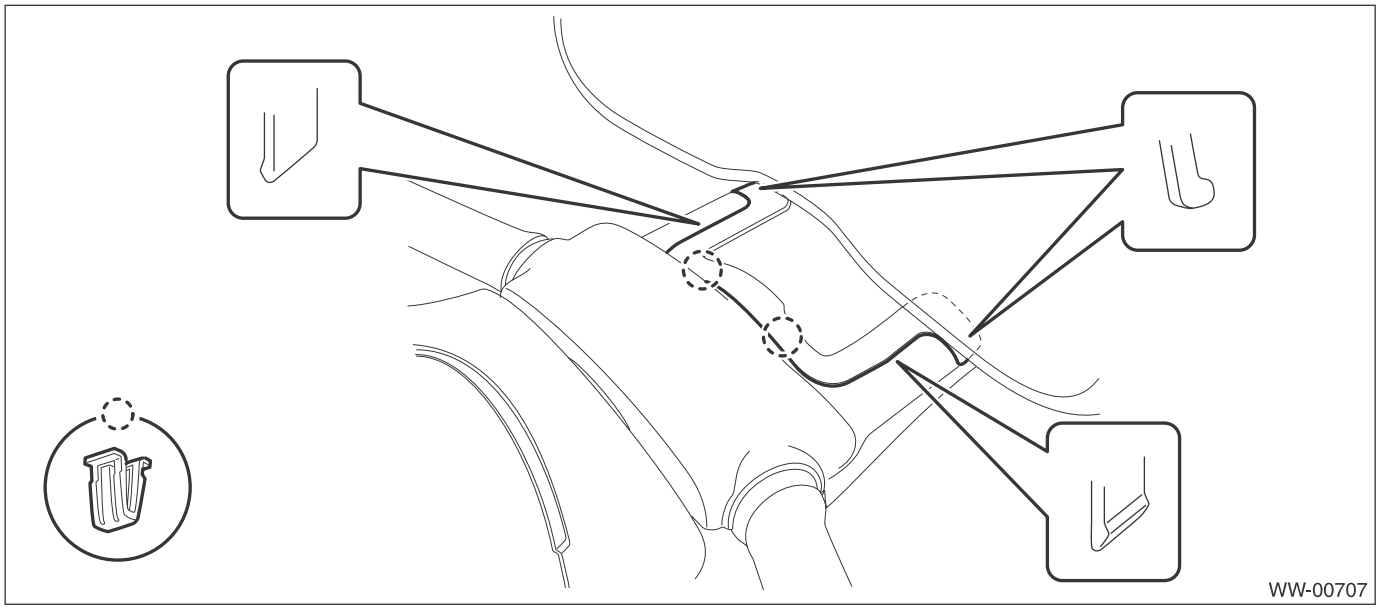

3) Remove the bulb socket and ignition switch illumination bulb.

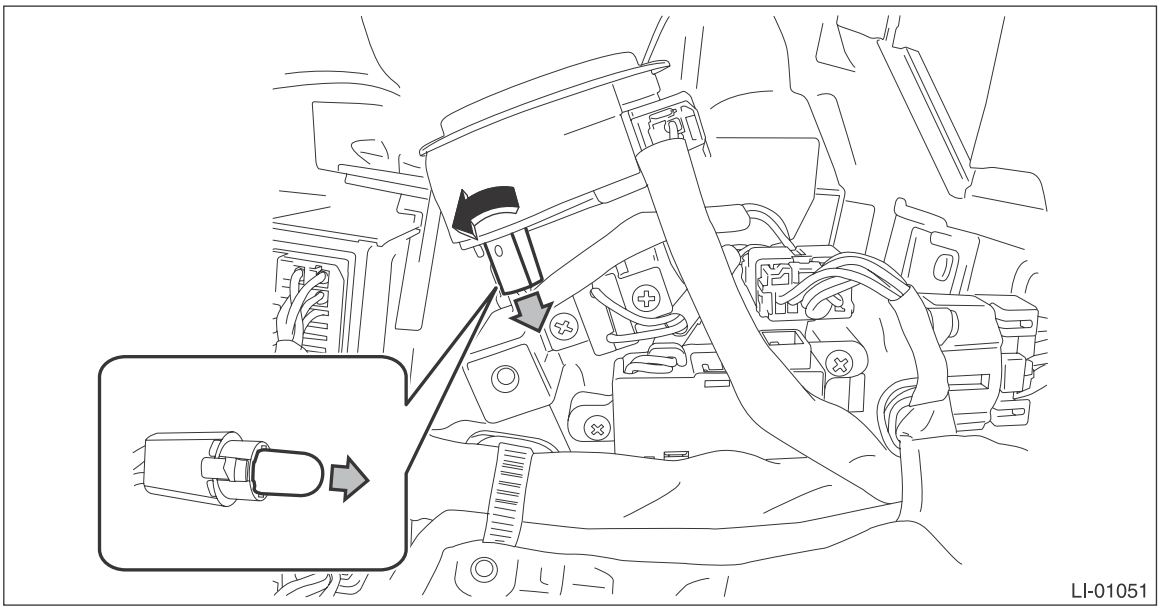

NOTE:
If the bulb socket is faulty, replace the ignition key lock. <Ref. to SL-59, Ignition Key Lock.>

B: INSTALLATION

Install each part in the reverse order of removal.

C: INSPECTION

Step		Check	Yes	No
1	**CHECK IGNITION SWITCH ILLUMINATION.** Make sure the ignition switch illumination illuminates when driver's side door is open.	Does the ignition switch illumination illuminate?	Ignition switch illumination is normal.	Go to step **2**.
2	**CHECK IGNITION SWITCH ILLUMINATION.** Make sure the ignition switch illumination blinks when the ignition switch is turned to ON.	Does the ignition switch illumination blink?	Check the function setting of the body integrated unit. <Ref. to LAN(diag)-2, Basic Diagnostic Procedure.>	Check the ignition switch illumination circuit. <Ref. to SL-26, CHECK IGNITION SWITCH ILLUMINATION, INSPECTION, Keyless Entry System.>

35. Day Time Running Resistor

A: REMOVAL

1) Remove the front bumper face assembly. <Ref. to EI-39, REMOVAL, Front Bumper.>
2) Remove the daytime running resistor.
   (1) Disconnect the connector.
   (2) Remove the bolt, and remove the daytime running resistor.

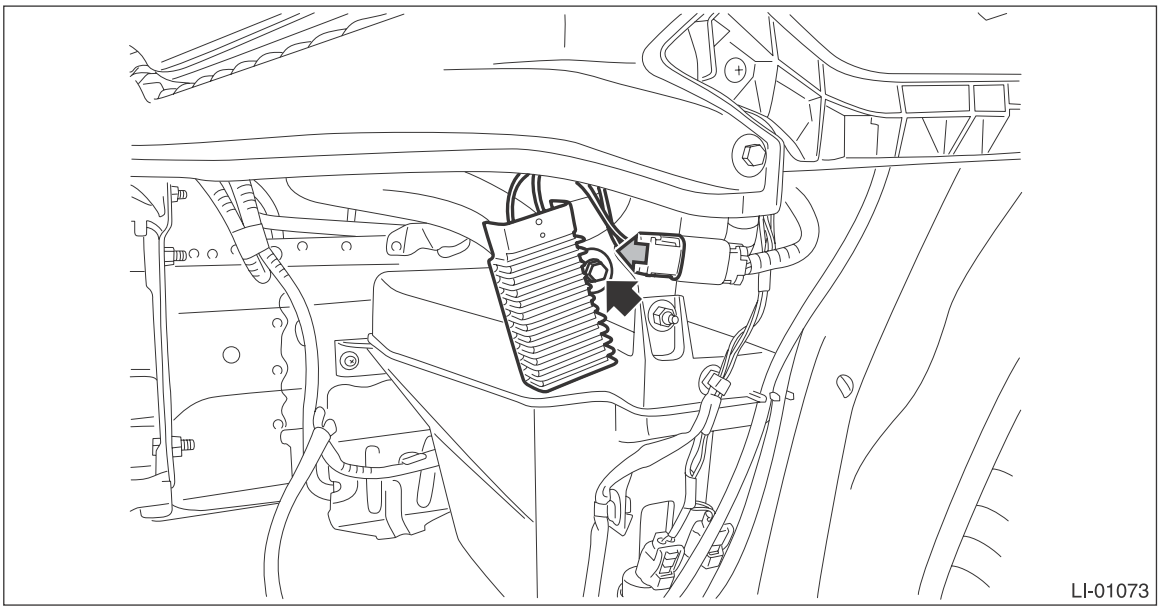

B: INSTALLATION

Install each part in the reverse order of removal.

Tightening torque:
Daytime running resistor: 7.5 N·m (0.76 kgf-m, 5.5 ft-lb)

36.Reflex Reflector

A: REMOVAL

From behind the bumper, release the claws and remove the reflex reflector.

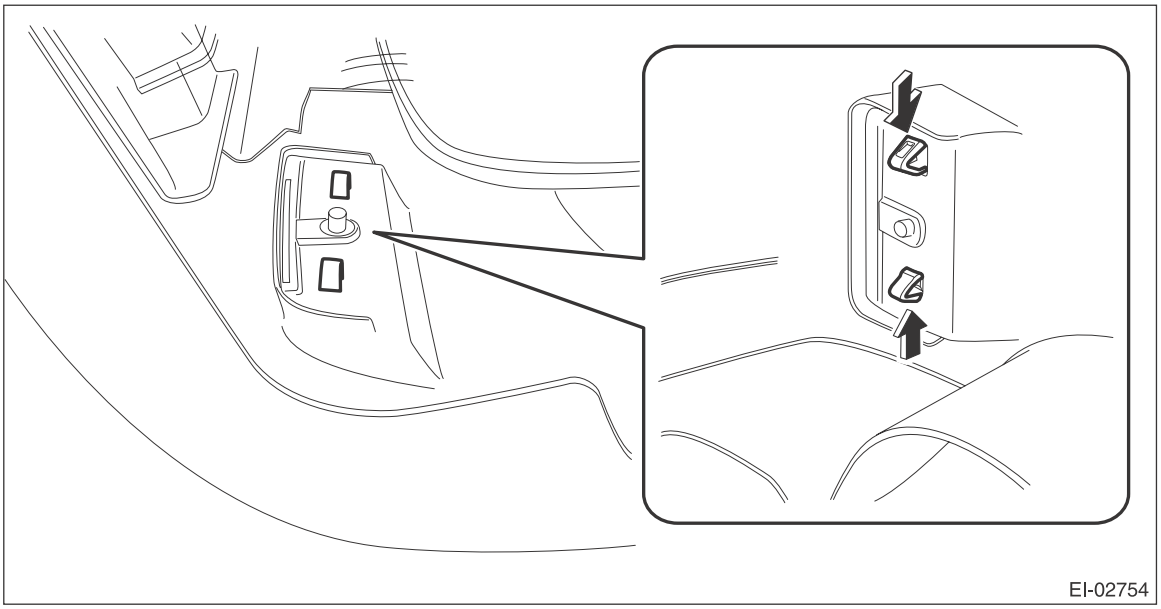

B: INSTALLATION

Install each part in the reverse order of removal.

37.Door Switch

A: REMOVAL

1) Disconnect the ground cable from battery.
2) Remove the door switch.
   (1) Remove the screws, and pull out the door switch.
   (2) Disconnect the connector and remove the door switch.

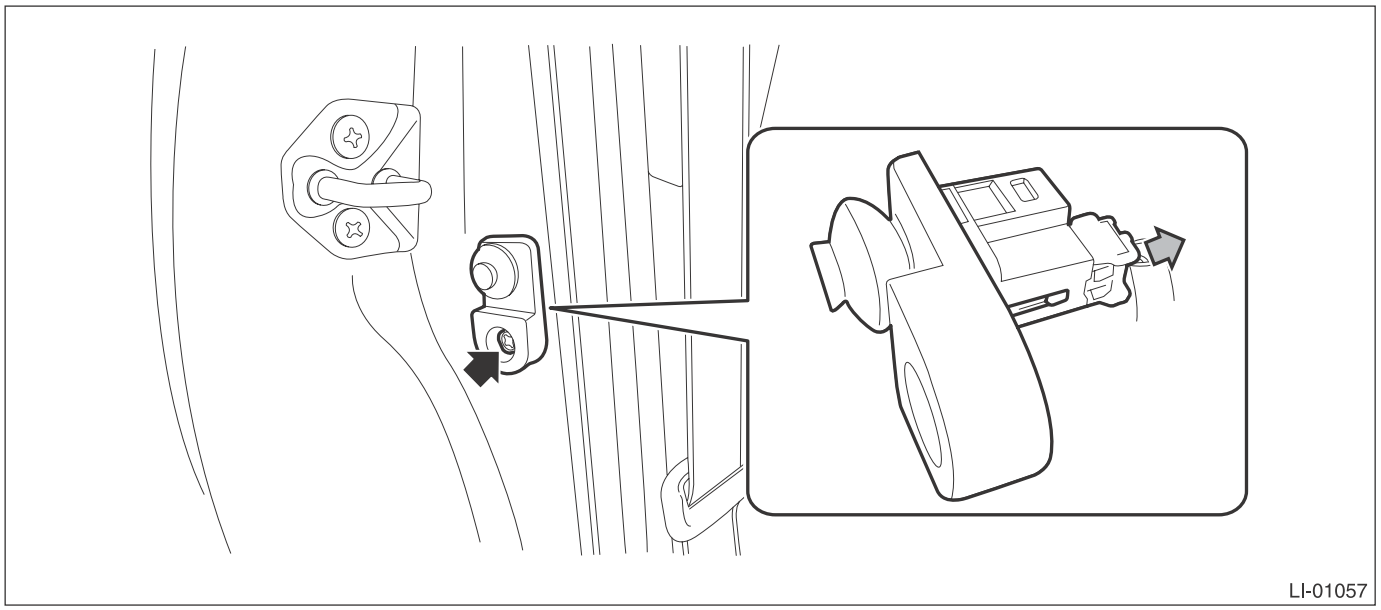

B: INSTALLATION

Install each part in the reverse order of removal.

C: INSPECTION

Refer to DOOR SWITCH CHECK of Interior Light System. <Ref. to LI-16, CHECK DOOR SWITCH., INSPECTION, Interior Light System.>

WIPER AND WASHER SYSTEMS

WW

		Page
1.	General Description	2
2.	Wiper and Washer System	7
3.	Combination Switch (Wiper)	8
4.	Wiper Blade	15
5.	Washer Tank and Motor	18
6.	Front Wiper Arm	24
7.	Front Wiper Motor and Link	26
8.	Front Washer Nozzle	32
9.	Rear Wiper Arm	36
10.	Rear Wiper Motor	38
11.	Rear Washer	43

1. General Description

A: SPECIFICATION

Front wiper motor	Input	12 V — 72 W or less
Rear wiper motor	Input	12 V — 42 W or less
Front washer motor	Pump type	Centrifugal
	Input	12 V — 36 W or less
Rear washer motor	Pump type	Centrifugal
	Input	12 V — 36 W or less

B: COMPONENT

1. FRONT WIPER

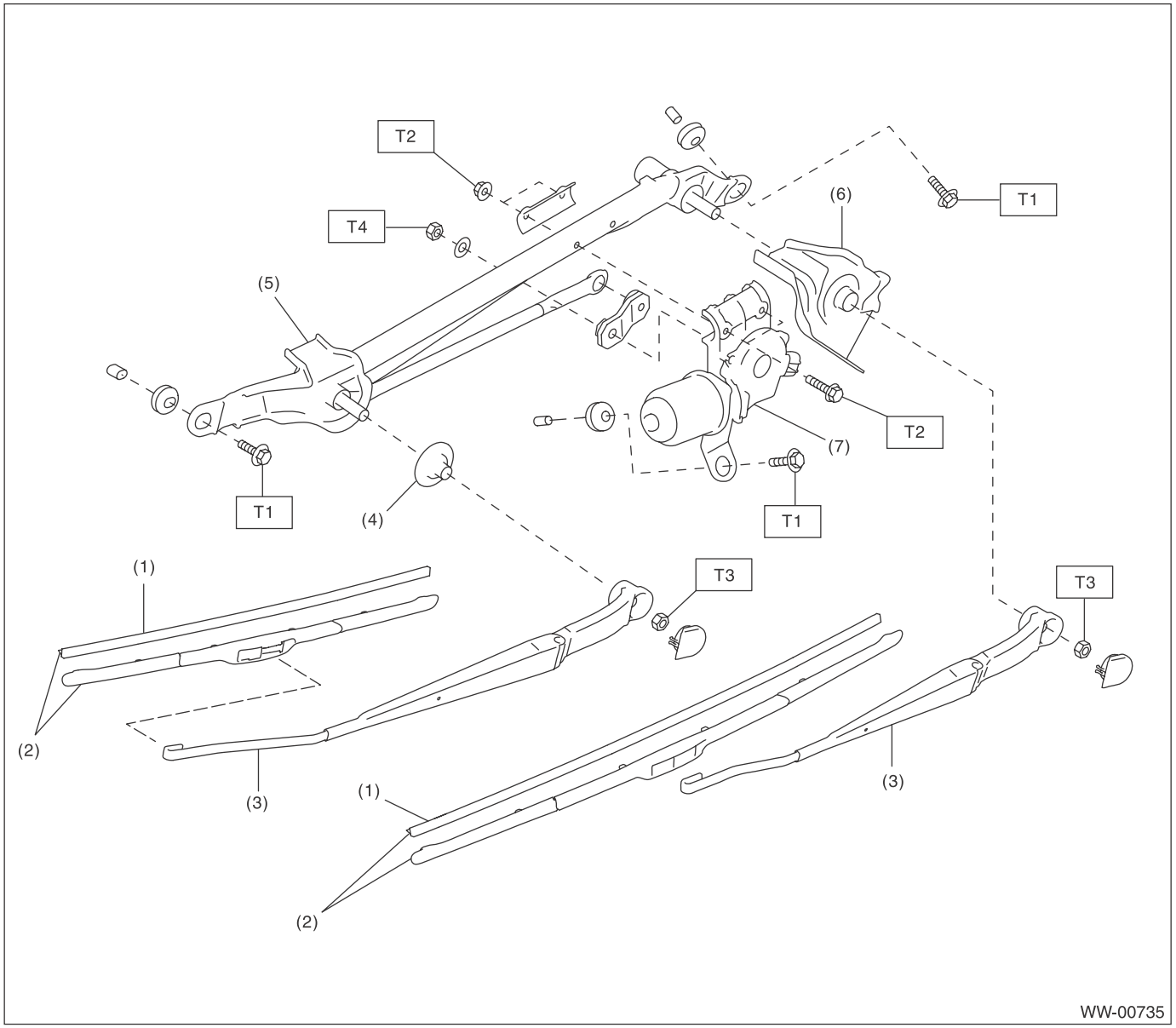

(1) Wiper rubber
(2) Wiper blade ASSY
(3) Wiper arm ASSY
(4) Pivot cover B
(5) Wiper link ASSY
(6) Pivot cover C
(7) Wiper motor ASSY

Tightening torque:N·m (kgf-m, ft-lb)
T1: 6 (0.61, 4.4)
T2: 7.5 (0.76, 5.5)
T3: 22 (2.24, 16.2)
T4: 32.1 (3.20, 23.2)

2. REAR WIPER

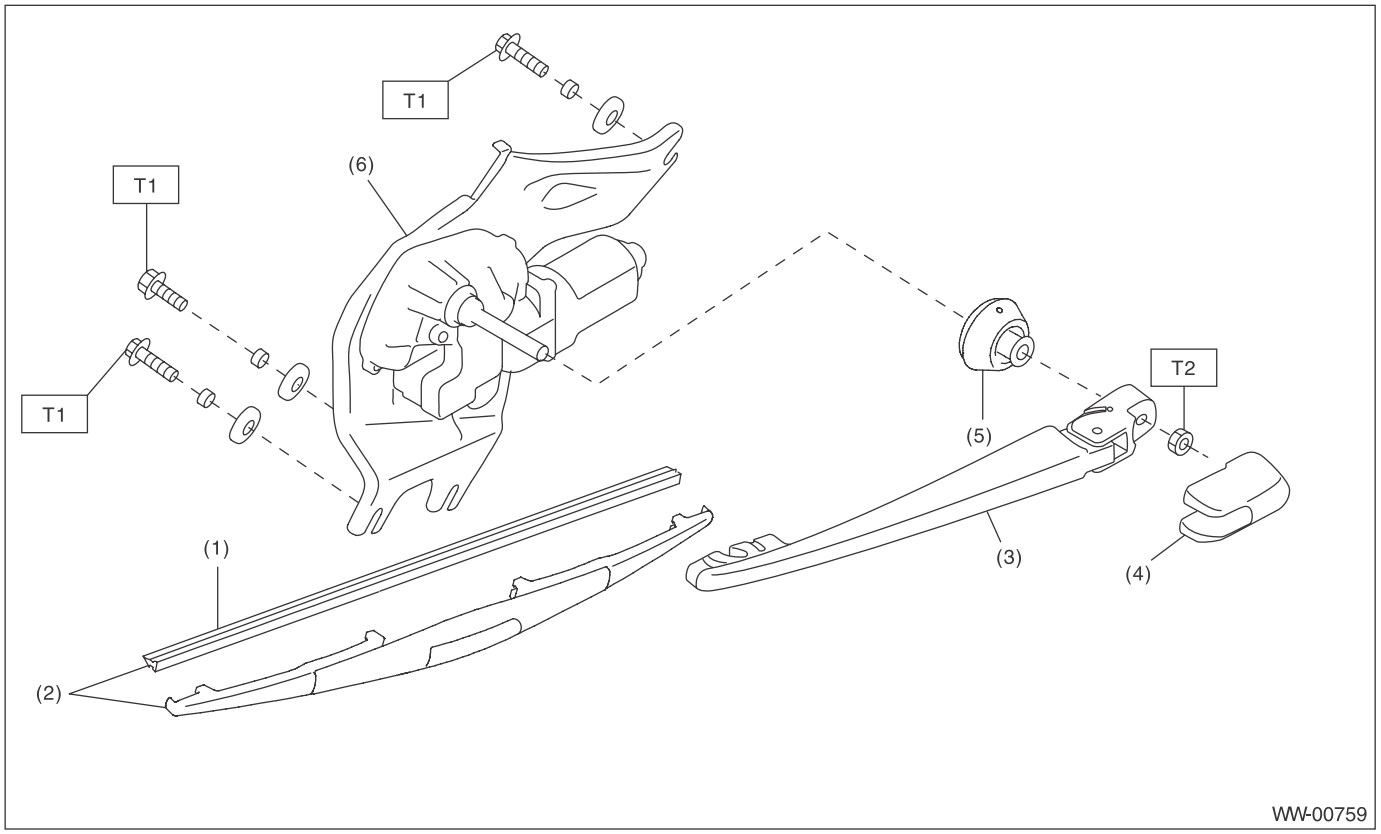

(1)	Wiper rubber	(4)	Wiper arm cover	***Tightening torque:N·m (kgf-m, ft-lb)***
(2)	Wiper blade ASSY	(5)	Pivot cap	***T1: 7 (0.71, 5.2)***
(3)	Wiper arm	(6)	Wiper motor ASSY	***T2: 8 (0.82, 5.9)***

3. WASHER TANK

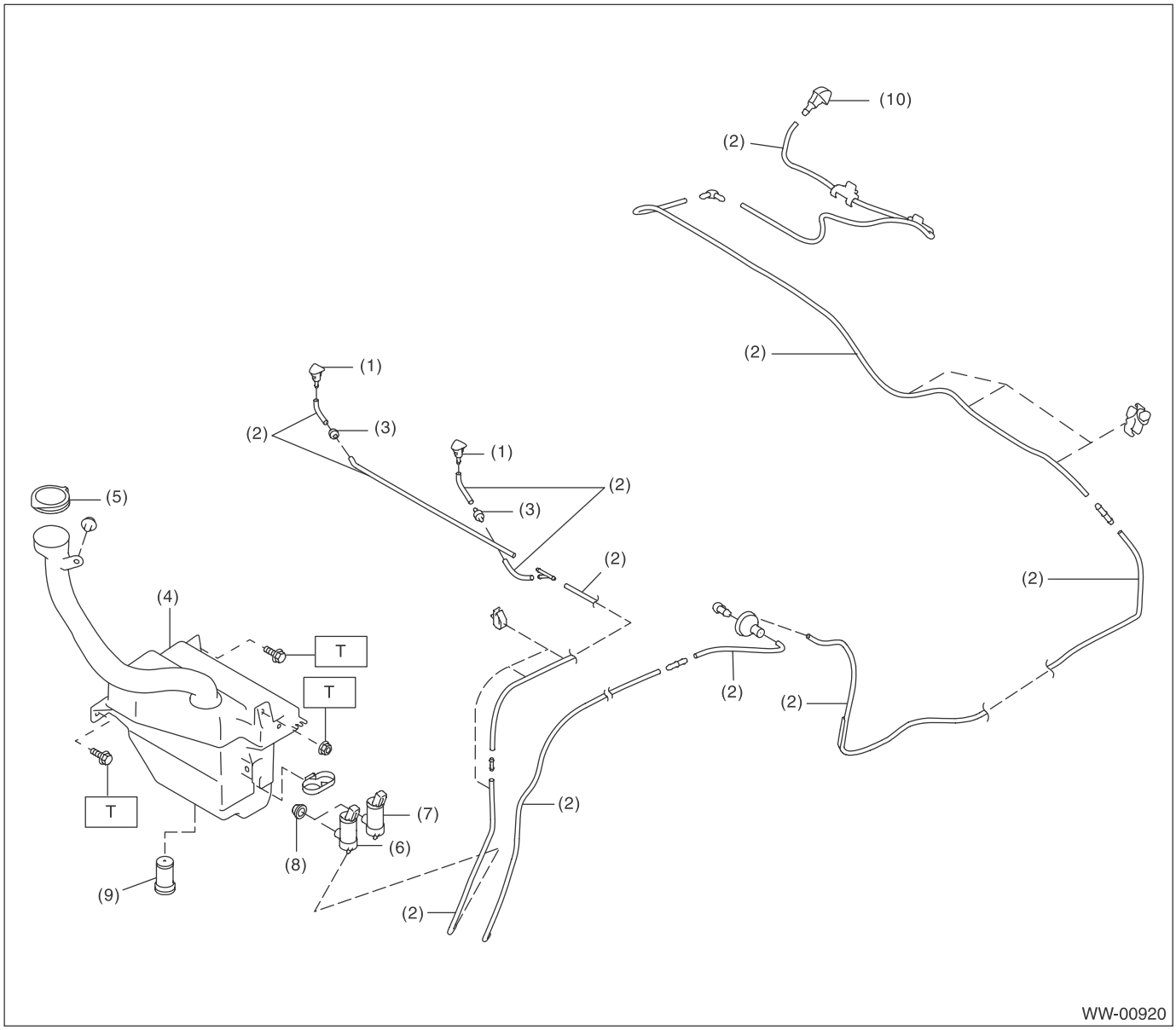

(1) Front washer nozzle
(2) Washer hose
(3) Check valve
(4) Washer tank
(5) Washer tank cap
(6) Front washer motor
(7) Rear washer motor (OUTBACK model only)
(8) Grommet
(9) Washer tank level sensor
(10) Rear washer nozzle (OUTBACK model only)

Tightening torque:N·m (kgf-m, ft-lb)
T: 6 (0.61, 4.4)

C: CAUTION

- Connect the connectors and hoses securely during reassembly.
- After reassembly, ensure each function operates properly.
- Be careful with the airbag system wiring harness which passes near electrical parts and switches.
- Yellow connectors and harnesses with yellow tapes around them are the connectors and harnesses for the airbag system. Using a tester above such circuits may cause malfunction of airbag system. Follow the cautions for the airbag system in this case. <Ref. to AB-9, CAUTION, General Description.>
- When connecting the pipe hoses, be careful not to cause bend or blockage.
- If even a small amount of silicon oil or grease enters tank and washer fluid passages, an oil film will be formed on the glass and will cause the wiper to chatter and judder. Make sure that no oil comes into contact with the system.

D: PREPARATION TOOL

1. SPECIAL TOOL

ILLUSTRATION	TOOL NUMBER	DESCRIPTION	REMARKS
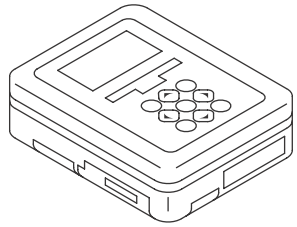 ST1B022XU0	1B022XU0	SUBARU SELECT MONITOR III KIT	Used for setting of each function and trouble-shooting for electrical system.

2. GENERAL TOOL

TOOL NAME	REMARKS
Circuit tester	Used for checking voltage and continuity.

2. Wiper and Washer System

A: WIRING DIAGRAM

1. WIPER AND WASHER (FRONT)

Refer to “Front Wiper and Washer System” in the wiring diagram. <Ref. to WI-151, WIRING DIAGRAM, Front Wiper and Washer System.>

2. WIPER AND WASHER (REAR)

Refer to “Rear Wiper and Washer System” in the wiring diagram. <Ref. to WI-196, WIRING DIAGRAM, Rear Wiper and Washer System.>

B: INSPECTION

Symptoms	Repair order
Wiper and washers do not operate.	1. Wiper fuse (F/B No. 14, 15) 2. Combination switch 3. Wiper motor assembly 4. Wiring harness
Wipers do not operate in LO or HI.	1. Combination switch 2. Wiper motor assembly 3. Wiring harness
Wipers do not operate in INT.	1. Combination switch 2. Wiper motor assembly 3. Wiring harness
Washer motor does not operate.	1. Washer switch 2. Washer motor 3. Wiring harness
Wipers do not operate when washer switch is ON.	1. Wiper motor assembly 2. Wiring harness
Washer fluid spray does not operate properly.	1. Washer motor 2. Washer hose and nozzle

C: NOTE

For operation procedures of each component of the wiper and washer system, refer to the respective sections.

- Combination switch (Wiper):<Ref. to WW-8, Combination Switch (Wiper).>
- Wiper blade:<Ref. to WW-15, Wiper Blade.>
- Front wiper arm:<Ref. to WW-24, Front Wiper Arm.>
- Front wiper motor and link:<Ref. to WW-26, Front Wiper Motor and Link.>
- Rear wiper arm:<Ref. to WW-36, Rear Wiper Arm.>
- Rear wiper motor:<Ref. to WW-38, Rear Wiper Motor.>
- Washer tank and motor:<Ref. to WW-18, Washer Tank and Motor.>
- Front washer nozzle:<Ref. to WW-32, Front Washer Nozzle.>
- Rear washer nozzle:<Ref. to WW-43, Rear Washer.>

3. Combination Switch (Wiper)

A: REMOVAL

1) Disconnect the ground cable from battery.
2) Remove the steering column cover.
   (1) Remove the screws by turning the steering wheel to right and left.

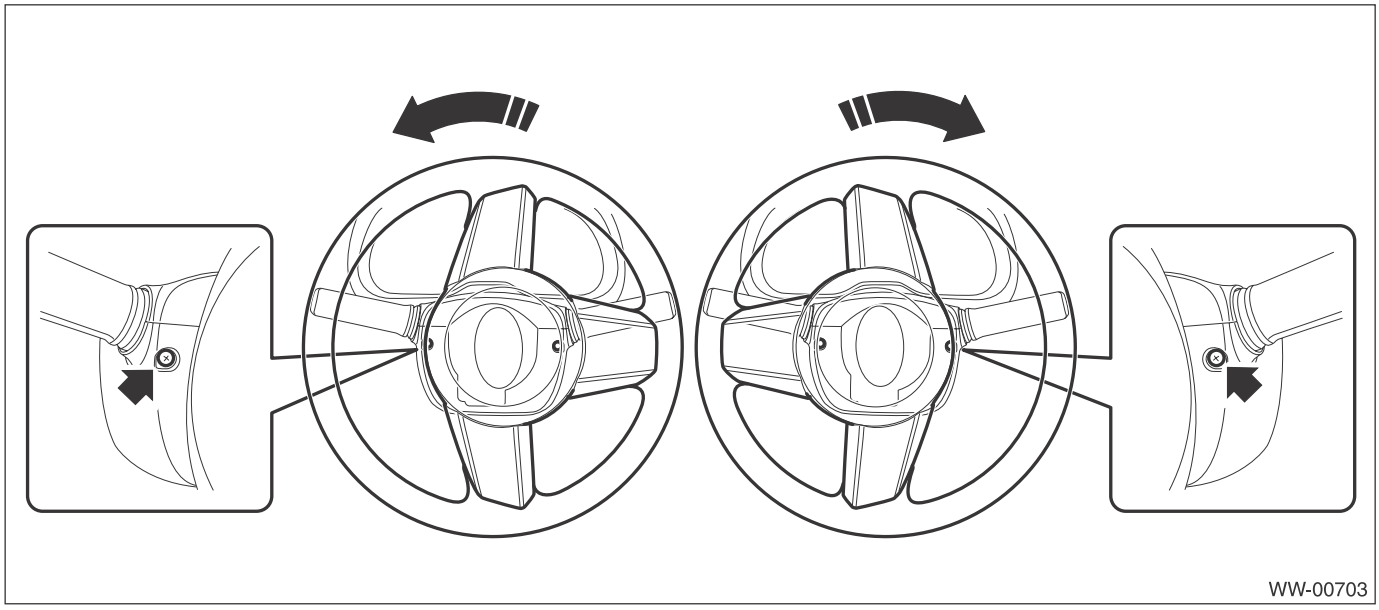

   (2) Release the claws and remove the steering column lower cover.

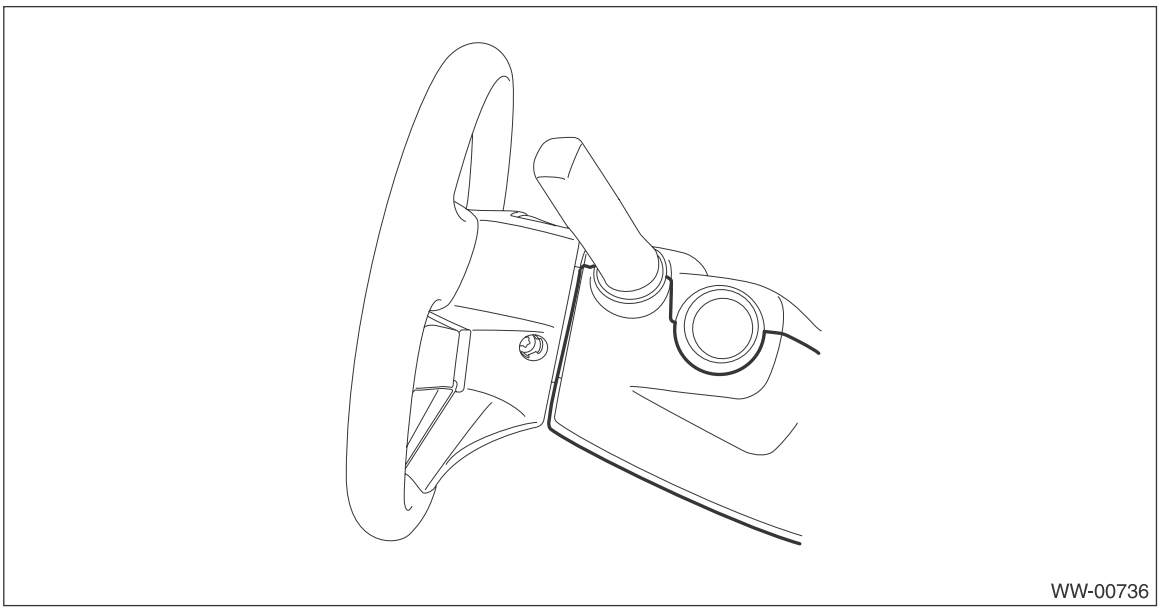

(3) Separate the steering column upper cover and steering upper cover, and remove the steering column upper cover.

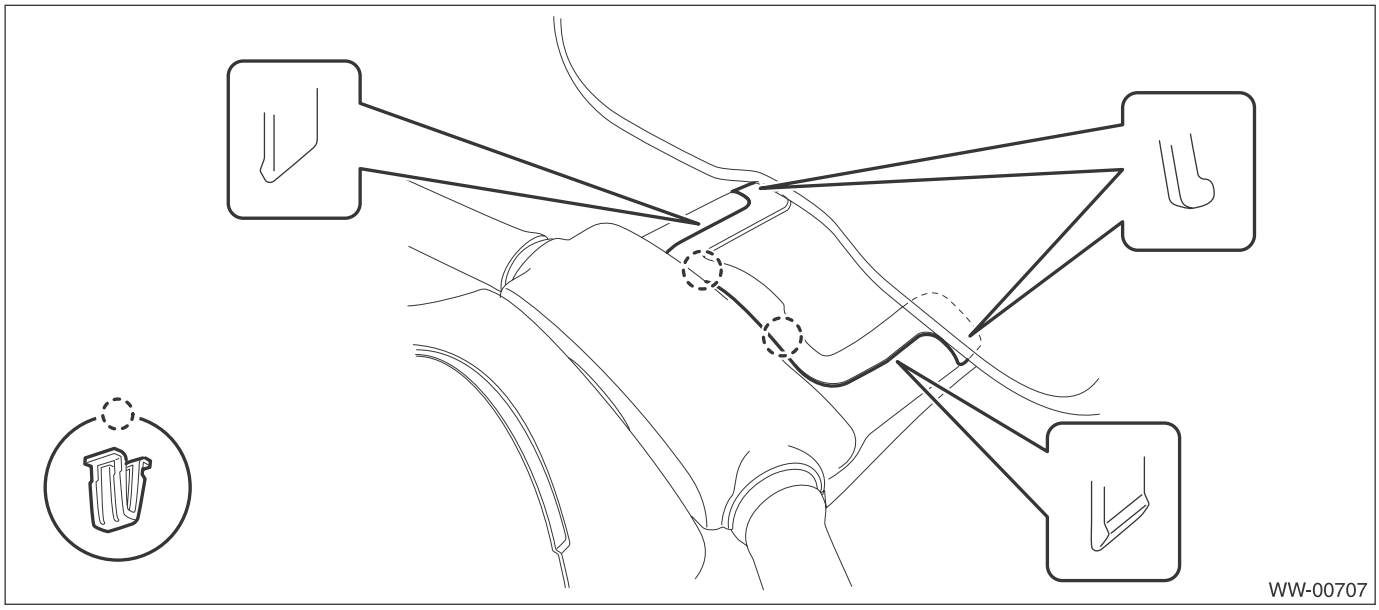

3) Remove the wiper switch assembly.
(1) Disconnect the connector from the wiper switch.
(2) Release the claws, and pull out the wiper switch assembly.

CAUTION:
Do not press the claws with excessive force. They may be damaged.

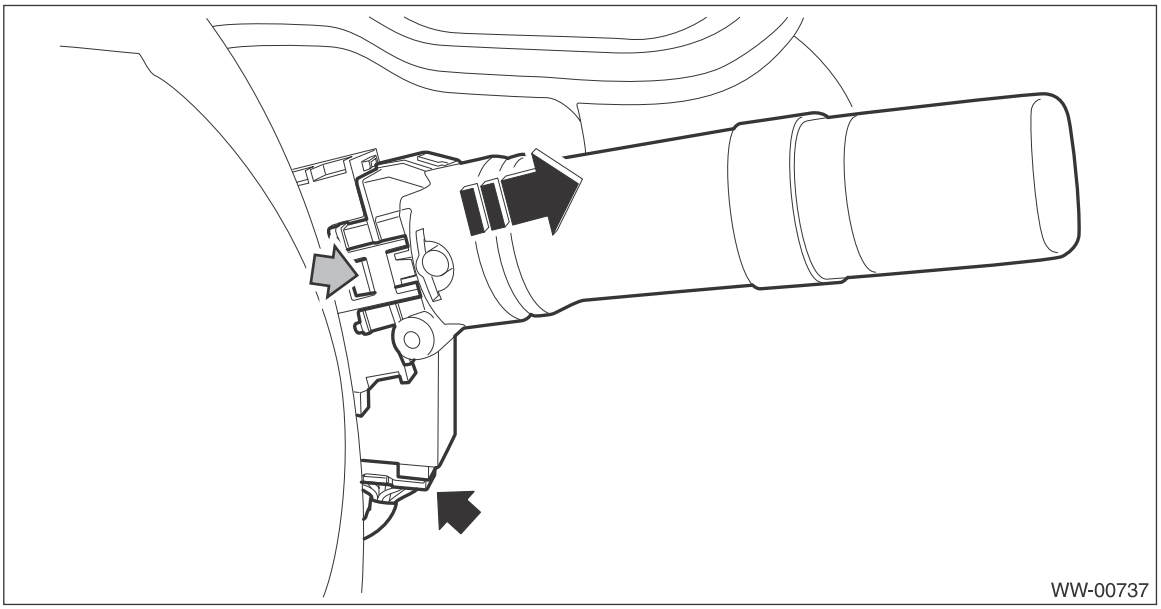

B: INSTALLATION

Install each part in the reverse order of removal.

C: INSPECTION

1. INSPECTION OF SWITCH UNIT

1) Operate the switches to check the continuity between terminals.

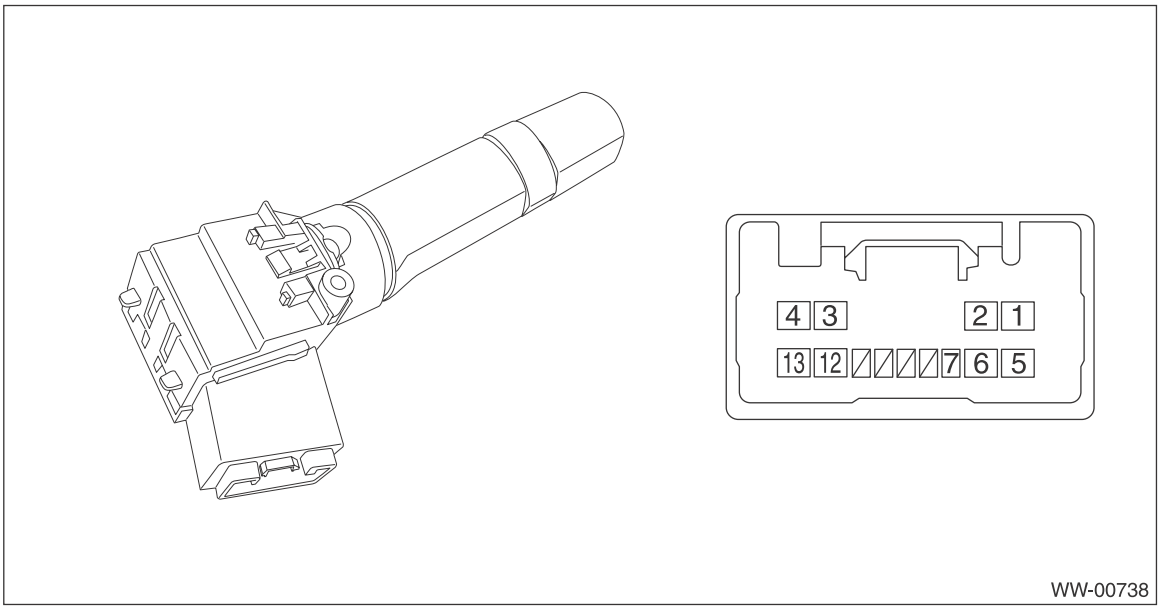

	Switch position	Terminal No.	Specification
Front	OFF	3 and 12	Less than 1 Ω
	INT	3 and 12	Less than 1 Ω
	LO	3 and 4	Less than 1 Ω
	HI	4 and 13	Less than 1 Ω
	Washer ON	1 and 2	Less than 1 Ω
REAR	OFF	5 and 2 5 and 6 2 and 6	1 MΩ or more
	ON	2 and 6	Less than 1 Ω
	INT	2 and 7	Less than 1 Ω
	Washer ON	5 and 2 5 and 6 2 and 6	Less than 1 Ω

2) Replace the switch if the inspection result is not within the standard value.

2. FRONT WIPER

1) CHECK WITH SUBARU SELECT MONITOR
   (1) Check the input signal when the front wiper switch is turned to LO or HI, using the current data display of body integrated unit.
   (2) Does the input signal change corresponding to the switch operation?
   - **Yes** → Finish the diagnosis.
   - **No** →
     1. Check the harness.
     2. Check the input voltage of body integrated unit.

Connector & terminal
(B280) No. 2 (+) — Chassis ground (–):
     3. Replace the body integrated unit. <Ref. to SL-72, Body Integrated Unit.>

2) Check the intermittent operation (inspection of the wiper switch alone)

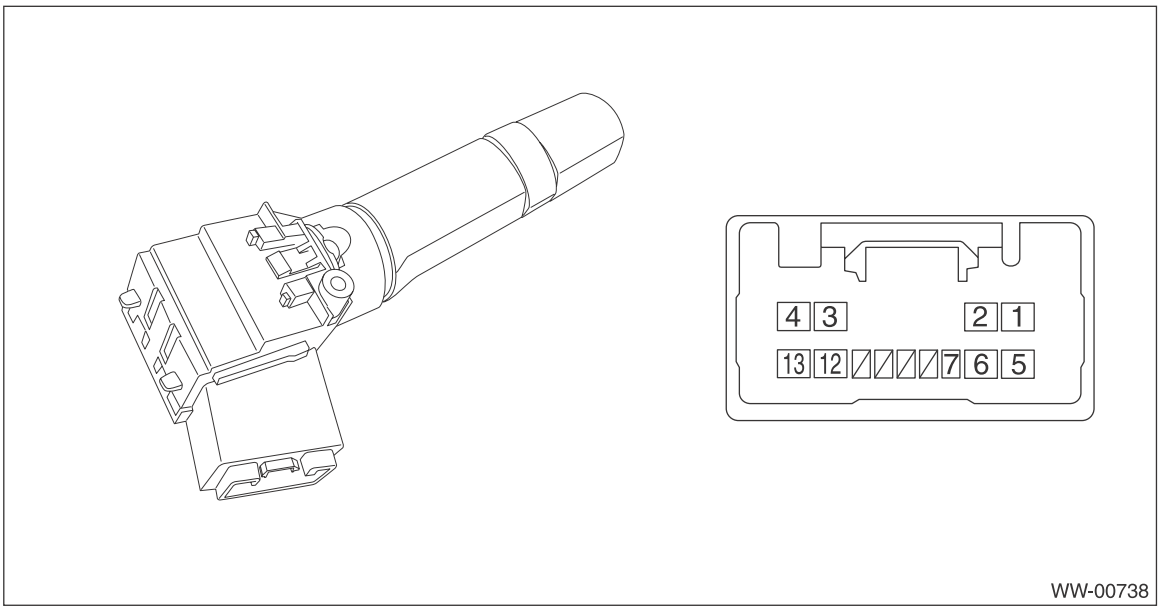

(1) Set the voltmeter between terminal No. 1 (+) — No. 8 (–).
(2) Connect the battery to connector. (terminal No. 1 (+), terminal No. 2 & No. 8 (–))
(3) Turn the front wiper switch to INT.
(4) Connect the battery (+) to the terminal No. 1 for 5 seconds.
(5) Connect the battery (–) to the terminal No. 2 and check the voltage between terminal No. 1 — terminal No. 8 during intermittent operation.
(6) Perform step (1) to (5) when intermittent control switch is in MIN or MAX, and replace the switch if the operation is not as specified.

Intermittent stationary time
MIN: Approx. 4 seconds
MAX: Approx. 19 seconds

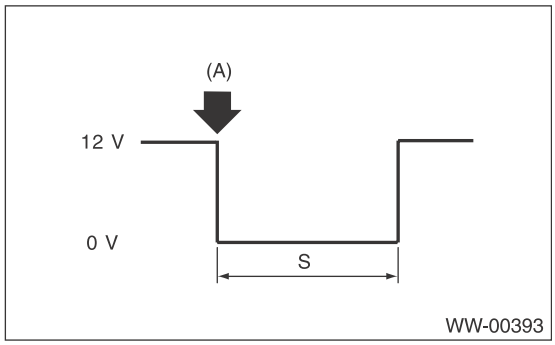

(A): Connect the battery (–) to the terminal No. 12
S: Intermittent downtime (sec.)

3. REAR WIPER

1) CHECK INPUT OF BODY INTEGRATED UNIT
Check the input signal when the rear wiper switch is operated using Subaru Select Monitor.
(1) Turn the ignition switch to ON.
(2) Operate the rear wiper switch to each position of ON, INT and Washer ON.
(3) Does the input signal change corresponding to the switch operation?
- **Yes** → Go to step 4.
- **No** → Go to step 2.

2) CHECK HARNESS.
(1) Turn the ignition switch to OFF and disconnect the ground cable from battery.
(2) Disconnect the connector of body integrated unit and wiper switch.
(3) Measure the resistance between body integrated unit and wiper switch.

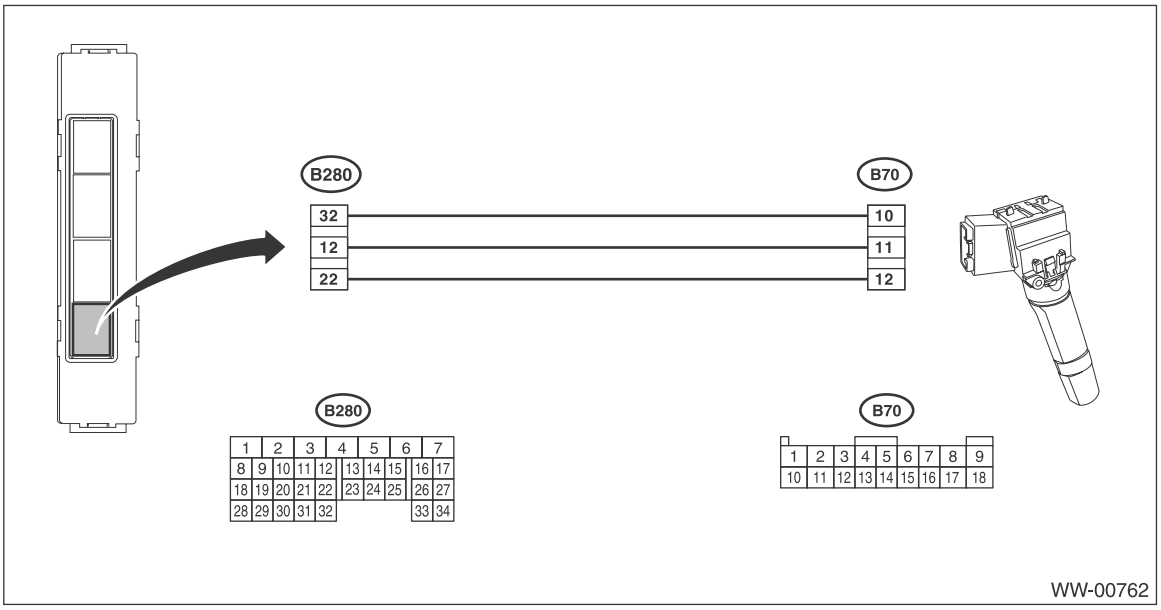

Connector & terminal
(B280) No. 32 — (B70) No. 10:
(B280) No. 12 — (B70) No. 11:
(B280) No. 22 — (B70) No. 12:
(4) Is the resistance less than 10 Ω?
- **Yes** → Go to step 3.
- **No** → Repair the harness between the body integrated unit and wiper switch.

3) CHECK INPUT VOLTAGE OF BODY INTEGRATED UNIT.
(1) Connect the ground cable to battery.
(2) Turn the ignition switch to ON and check the input voltage of body integrated unit.

Connector & terminal
(B280) No. 5 (+) — Chassis ground (–):
(i171) No. 17 (+) — Chassis ground (–):
(3) Is the voltage 10 V or more?
- **Yes** → Go to step 4.
- **No** → Check the harness and fuse.

4) CHECK OUTPUT OF BODY INTEGRATED UNIT.
Check the output signal when the rear wiper switch is operated using Subaru Select Monitor.
(1) Turn the ignition switch to ON.
(2) Operate the rear wiper switch to ON and Washer ON.
(3) When the operation in step (2) is performed, check the output signal of body integrated unit to rear wiper motor.
(4) When the rear wiper switch is set to ON, is ON output continuous? Also, when the washer is set to ON, is ON output?
- **Yes** → Go to step 5.
- **No** → Replace the body integrated unit. <Ref. to SL-72, Body Integrated Unit.>

5) CHECK OUTPUT OF BODY INTEGRATED UNIT.
Check the output signal when the rear wiper switch is operated using Subaru Select Monitor.
(1) Turn the ignition switch to ON.
(2) Set the rear wiper switch to INT.
(3) When the operation in step (2) is performed, check the output signal of body integrated unit.
(4) When the rear wiper switch is set to INT, is ON/OFF output repeated? (INT OFF time (when vehicle parked): 12 seconds)
- **Yes** → Go to step 8.
- **No** → Go to step 6.

6) CHECK HARNESS BETWEEN BODY INTEGRATED UNIT AND REAR WIPER MOTOR.
(1) Turn the ignition switch to OFF and disconnect the ground cable from battery.
(2) Disconnect the connector of body integrated unit and wiper switch.
(3) Measure the resistance between the harness connector terminals of the body integrated unit and rear wiper motor.

Connector & terminal
(B280) No. 6 — (D43) No. 2:
(4) Is the resistance less than 10 Ω?
- **Yes** → Go to step 7.
- **No** → Repair the open circuit of the harness between body integrated unit and rear wiper motor.

7) Check stop position circuit of the rear wiper motor
(1) Disconnect the harness connector of the rear wiper motor.
(2) Check the continuity of the circuit of rear wiper motor stop position.

Connector & terminal
(D43) No. 1 (+) — (D43) No. 4 (–):
(3) Is there continuity between terminals?
- **Yes** → Go to step 8.
- **No** → Replace the rear wiper motor assembly.

8) CHECK POWER SUPPLY CIRCUIT OF THE REAR WIPER MOTOR.
(1) Disconnect the harness connector of the rear wiper motor.
(2) Turn the ignition switch to ON.
(3) Measure the voltage between the rear wiper motor harness connector terminal and chassis ground.

Connector & terminal
(D43) No. 3 (+) — Chassis ground (–):
(4) Is the voltage 10 V or more?
- **Yes** → Go to step 9.
- **No** → Check the fuse (No. 27 in main fuse box).

9) CHECK GROUND CIRCUIT OF REAR WIPER MOTOR.
(1) Turn the ignition switch to OFF.
(2) Measure the resistance between the rear wiper motor harness connector terminal and chassis ground.

Connector & terminal
(D43) No. 4 — Chassis ground:
(3) Is the resistance less than 10 Ω?
- **Yes** → Go to step 10.
- **No** → Repair the open circuit of the rear wiper motor ground circuit.

10) CHECK HARNESS BETWEEN BODY INTEGRATED UNIT AND REAR WIPER MOTOR.
(1) Turn the ignition switch to OFF.
(2) Disconnect the harness connector of body integrated unit.
(3) Disconnect the harness connector of the rear wiper motor.
(4) Measure the resistance between the harness connector terminals of the body integrated unit and rear wiper motor.

Connector & terminal
(B280) No. 7 — (D43) No. 1:
(5) Is the resistance less than 10 Ω?
- **Yes** → Go to step 11.
- **No** → Repair the open circuit of the harness between body integrated unit and rear wiper motor.

11) CHECK OUTPUT OF BODY INTEGRATED UNIT.
(1) Connect the harness connector of body integrated unit.
(2) Disconnect the connector of the rear wiper motor.
(3) Turn the ignition switch to ON.
(4) Measure the voltage between rear wiper motor connector and chassis ground.

Connector & terminal
(D43) No. 2 (+) — Chassis ground (–):
(5) Is the voltage less than 1.5 V when rear wiper switch is OFF, and is the voltage 10 V or more when rear wiper switch is ON?
- **Yes** → Go to step 12.
- **No** → Replace the body integrated unit. <Ref. to SL-72, Body Integrated Unit.>

12) CHECK OPERATION OF REAR WIPER MOTOR.
(1) Remove the rear wiper motor.
(2) Check the rear wiper motor. <Ref. to WW-42, INSPECTION, Rear Wiper Motor.>
(3) Does the rear wiper motor rotate normally?
- **Yes** → Finished.
- **No** → Replace the rear wiper motor assembly.

NOTE:
Rear wiper intermittent time

Select lever position	Vehicle speed (km/h (MPH))	Intermittent stopping time (sec.)
Reverse	—	Continuous operation
Except for reverse mode	80 — (50 —)	3
	50 — 80 (31 — 50)	6
	20 — 50 (12 — 31)	9
	0 — 20 (0 — 12)	12

4. Wiper Blade

A: REMOVAL

1. FRONT

Remove the blade assembly.
1) Lift up the locking clip (A).
2) Turn the blade assembly in the arrow direction.
3) Press the arm in.
4) Pull out the arm while lifting it, and remove the blade assembly from the arm.

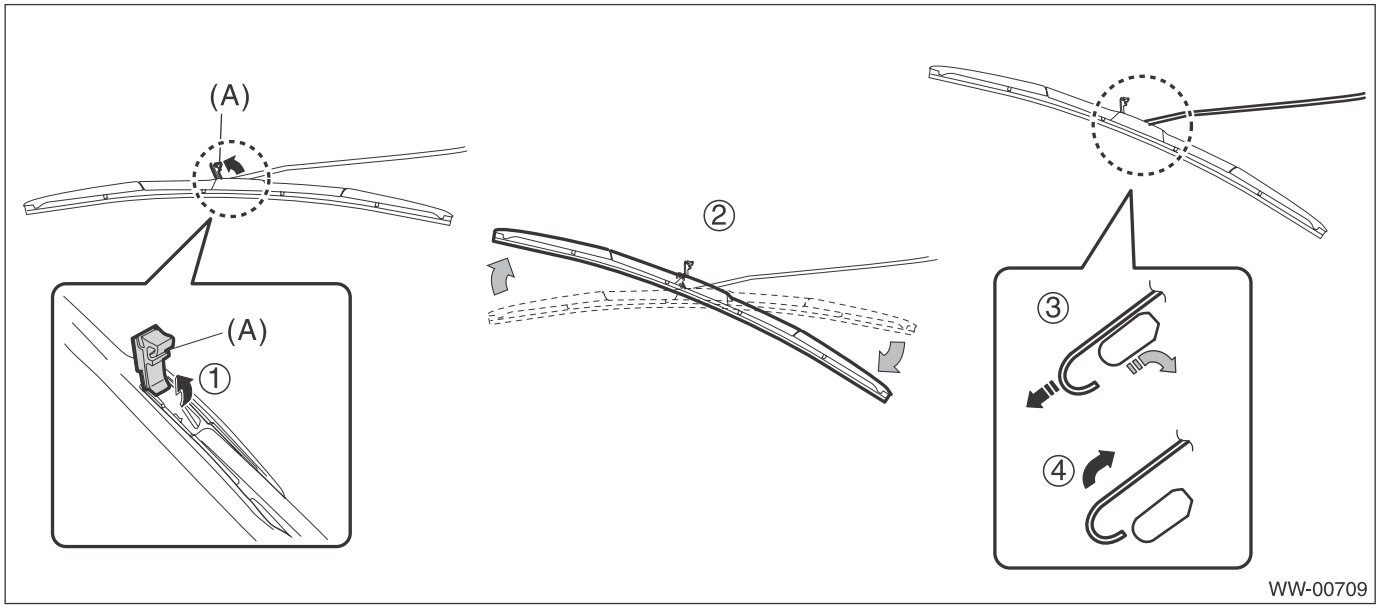

2. REAR

Turn the blade in the direction of arrow (A) and remove it from arm.

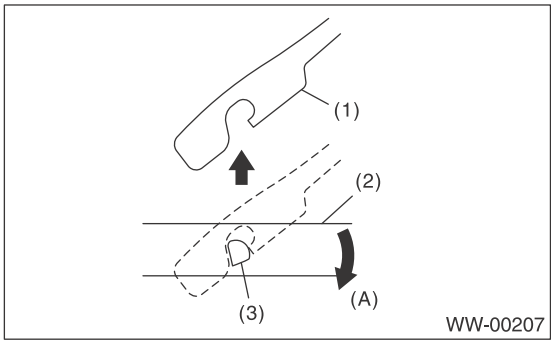

(A) Turn the wiper blade.

(1) Wiper arm
(2) Wiper blade
(3) Wiper blade attachment section

B: INSTALLATION

1) Install in the reverse order of removal.
2) Confirm that the clip is locked securely.

C: DISASSEMBLY

1. FRONT

Pull side (A) of the wiper rubber stopper and remove the rubber from the blade assembly.

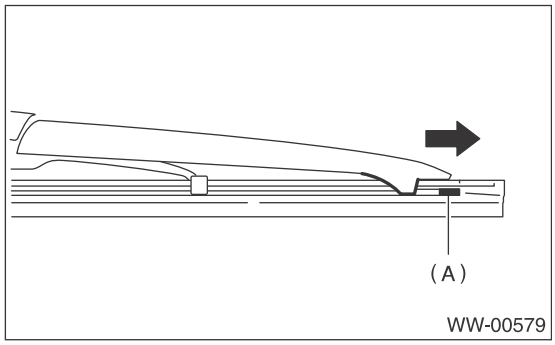

2. REAR

Pull the wiper rubber top slightly from stopper (A) and pull out completely.

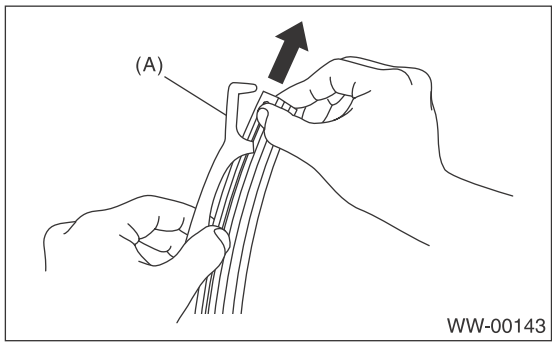

D: ASSEMBLY

1. FRONT

1) Insert the wiper rubber onto the blade so that the stopper is in the position shown in the figure.

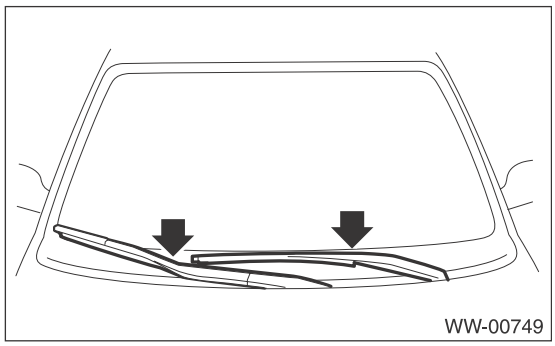

2) Make sure the wiper rubber is securely fastened to the pull stopper (A).

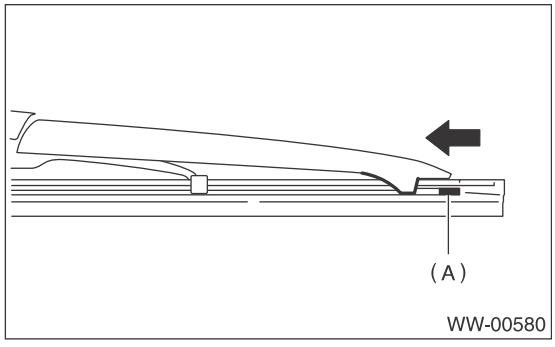

2. REAR

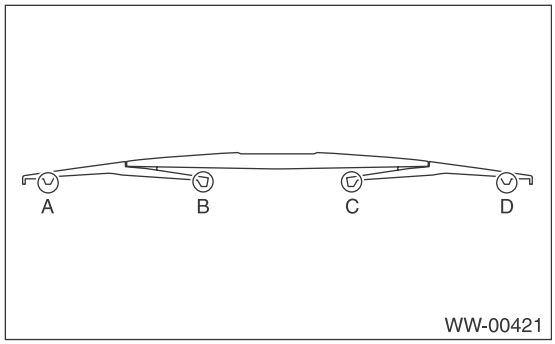

1) Insert the wiper rubber into claw (B).

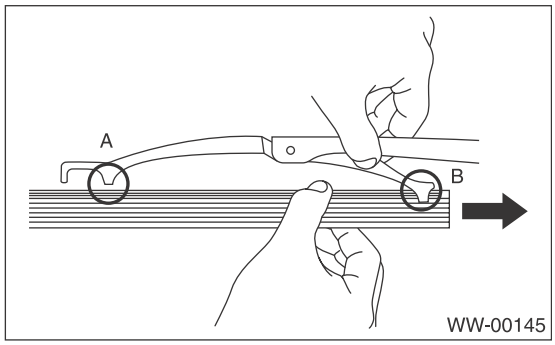

2) Insert the wiper rubber until its top end protrudes approx. 20 mm (0.79 in) from stopper (D).

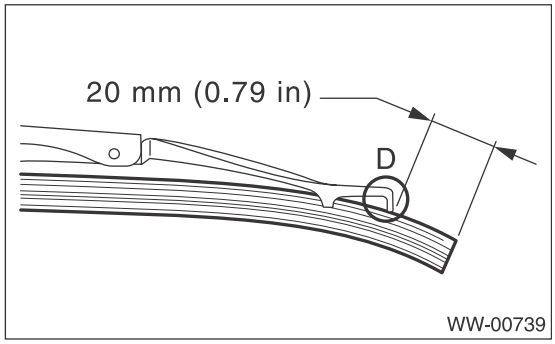

3) Insert the wiper rubber into claw (A).

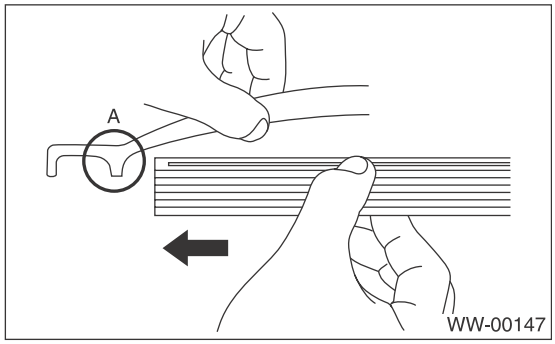

E: INSPECTION

1) When the wiper does not operate properly, inspect the following item.
- Make sure that the movable part of blade assembly moves smoothly.
- Make sure the wiper rubber is not deformed or damaged.

2) If damaged, replace with a new part.

5. Washer Tank and Motor

A: REMOVAL

1) Open the front hood.
2) Disconnect the ground cable from battery.
3) Remove the bumper face.
   (1) Remove the clips, turn over the front mud guard, and disconnect the fog light connector. (Model with fog light)

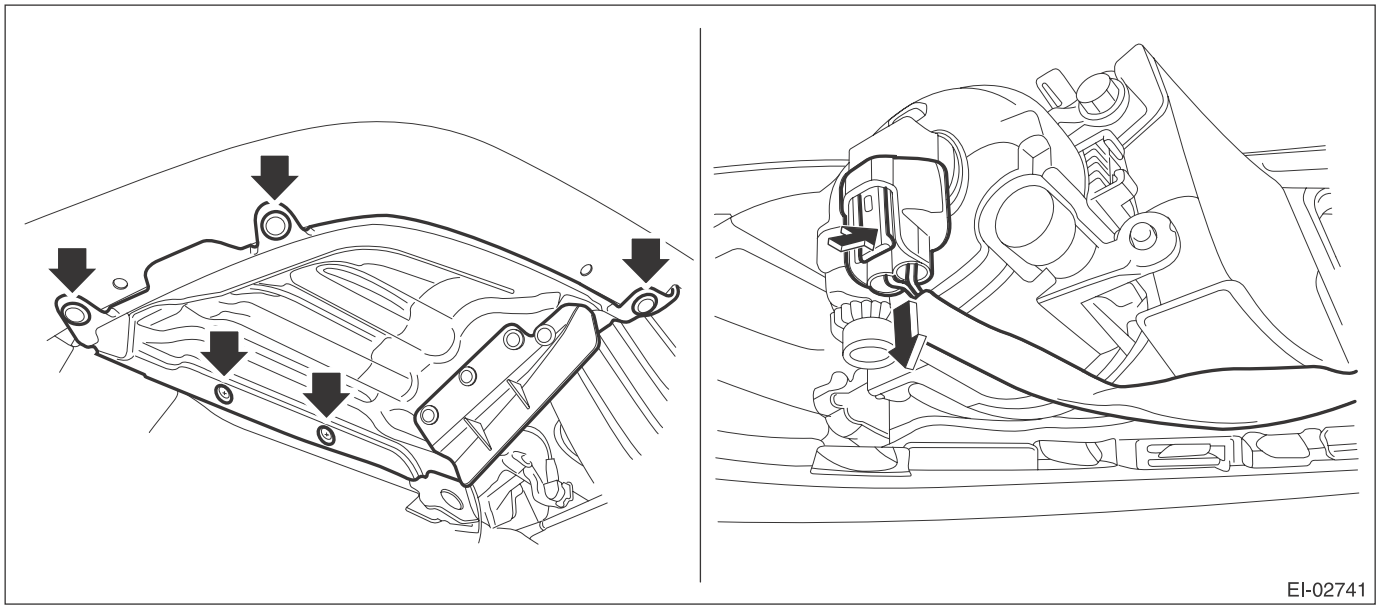

   (2) Remove the clips at the upper side of the bumper.
   (3) Remove the clips from the fender.

(4) Remove the clips at the lower side of bumper.

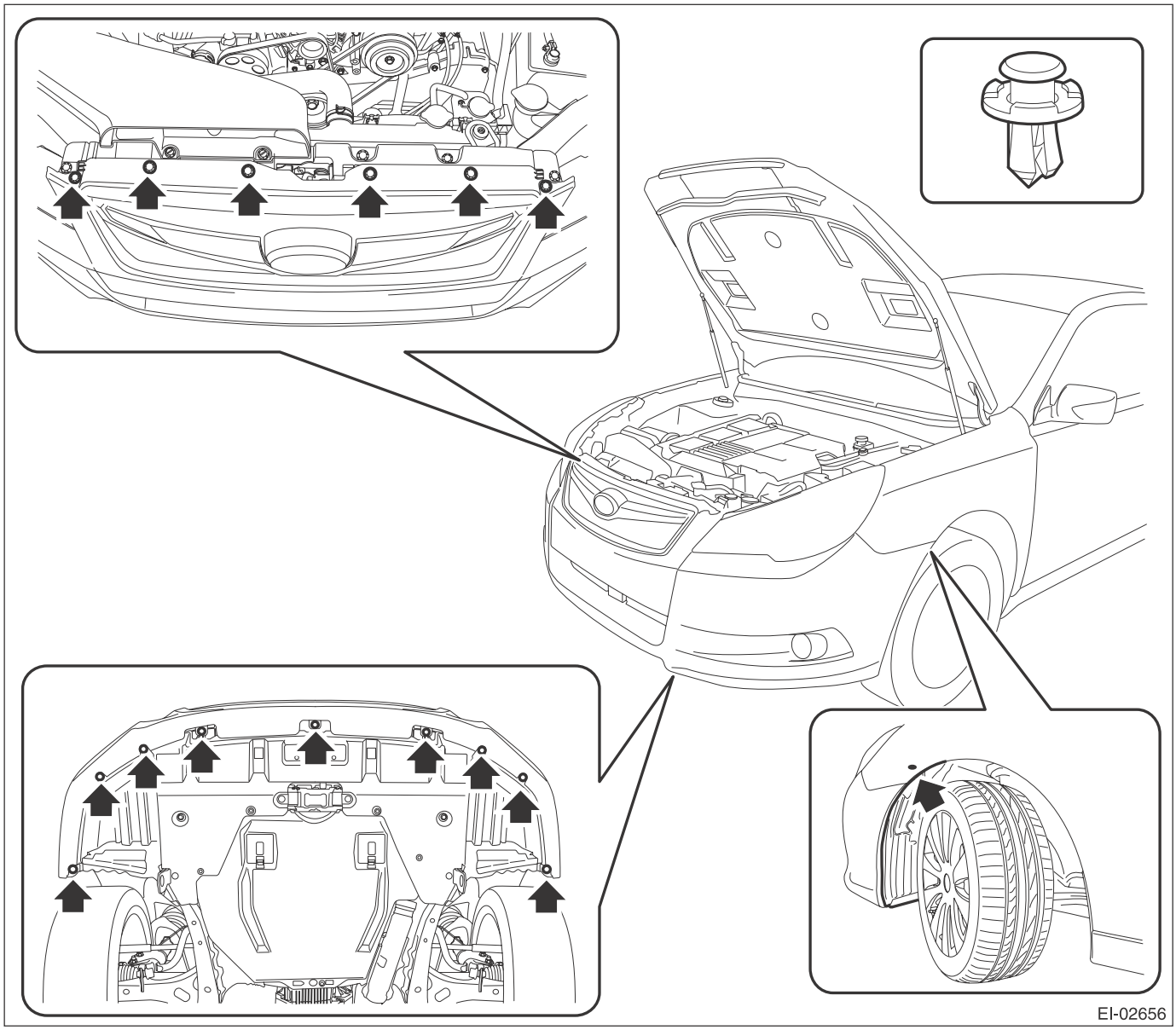

(5) Detach the flange section on the bumper face side from the bracket side front UPR.

CAUTION:
Do not pull forcibly. Doing so may damage the flange sections on the bumper face side.

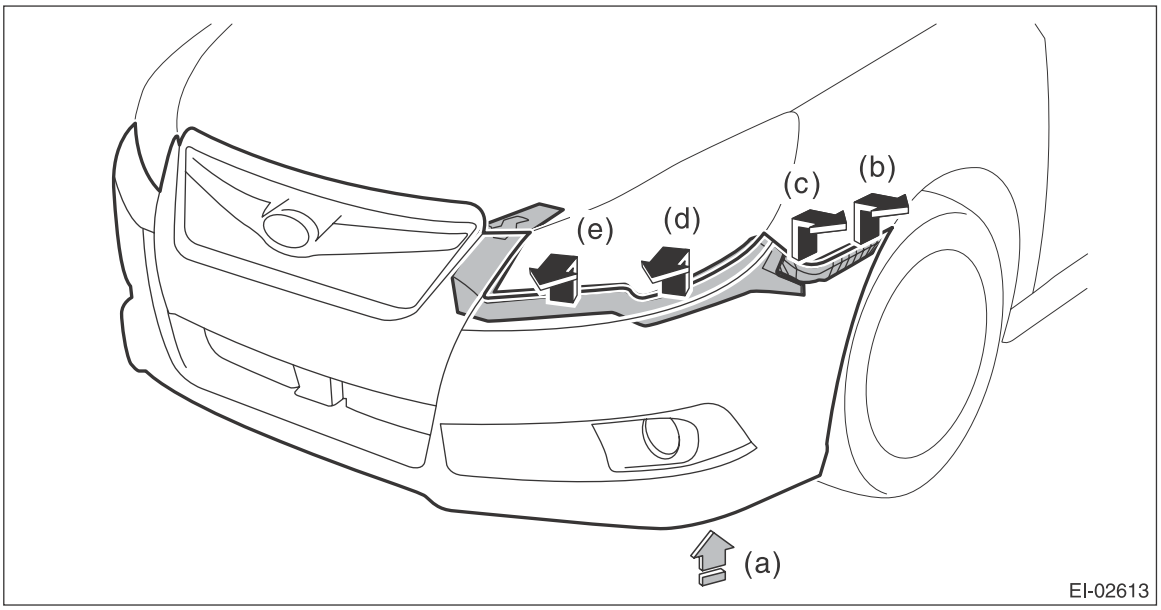

NOTE:
Pushing up the lower side (a) of the fog light, remove from (b) to (e).
Detach the opposite side in the same manner.

4) Remove the washer tank assembly.

(1) Remove the clip of the washer tank duct.

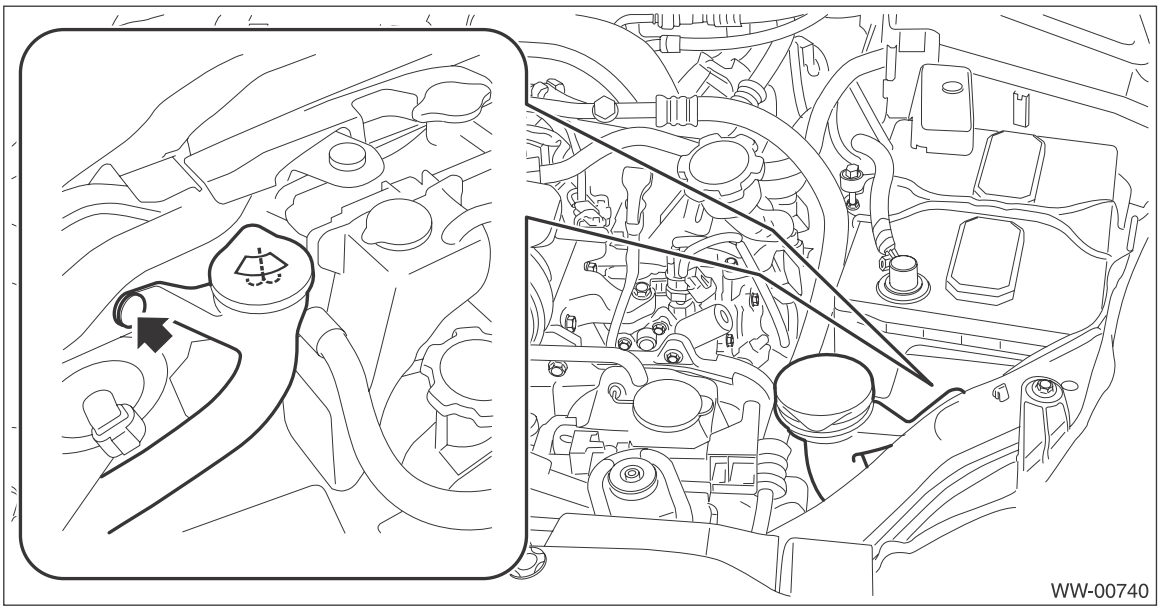

(2) Prepare a container before disconnecting the washer hose and drain all washer fluid in the tank.

(3) Disconnect the connector from the washer motor and washer tank level sensor, and then remove the harness clip.

(4) Remove the bolt and nuts and remove the washer tank assembly.

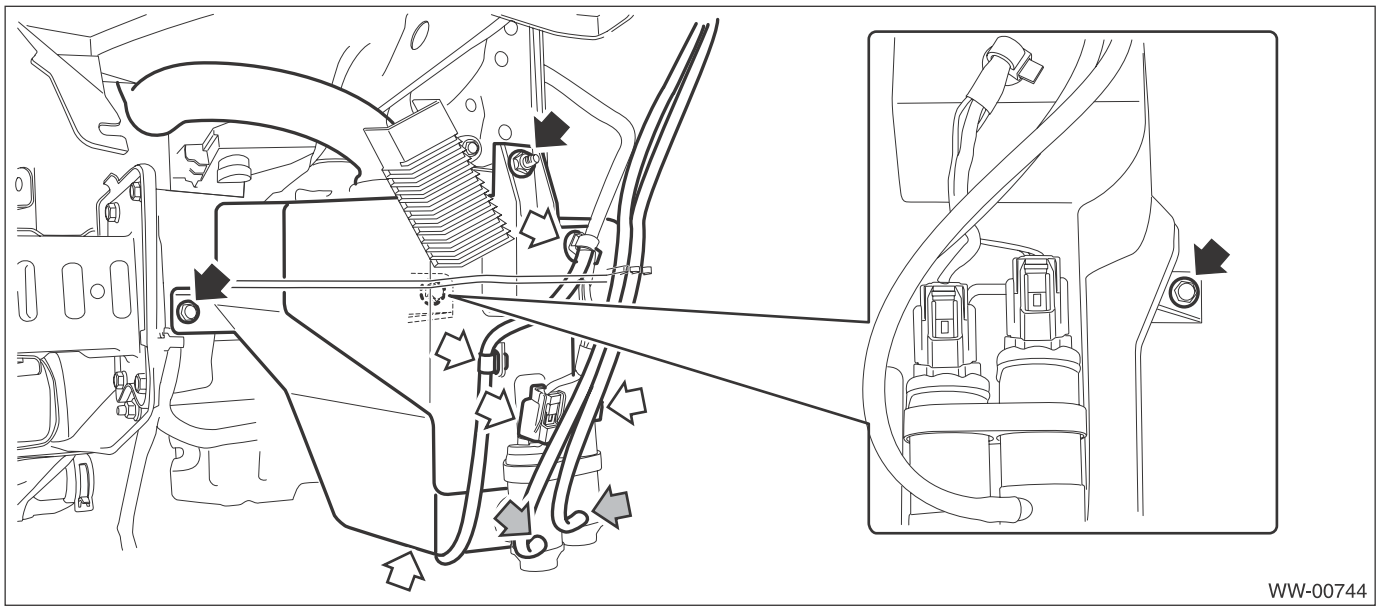

5) Remove the washer motor from the tank.

B: INSTALLATION

1) Install each part in the reverse order of removal.

CAUTION:
Install the bumper face so that the under cover front end (b) comes inside the front bumper face (a).

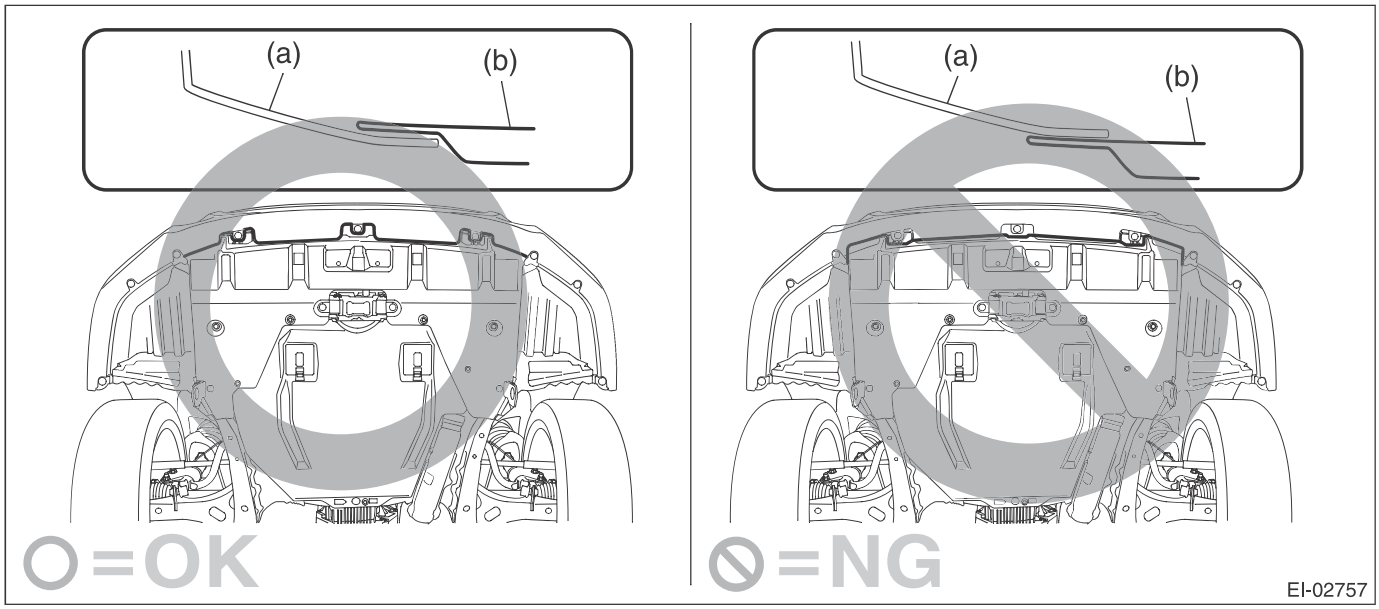

2) Add new washer fluid.

Tightening torque:
6 N·m (0.61 kgf-m, 4.4 ft-lb)

C: INSPECTION

1. WASHER MOTOR

Apply battery voltage to the connector terminal of the washer motor and make sure that the motor operates.

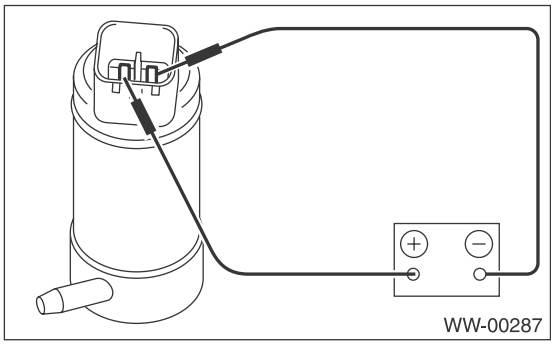

2. WASHER FLUID LEVEL SENSOR

1) Check the connection status of washer fluid level sensor connector.
2) Does the low washer fluid warning light illuminate after draining the washer fluid? And does the low washer fluid warning light go off after refilling the washer fluid?
- **Yes → Normal operation.**
- **No → Perform step 3.**

3) Using a tester, measure the voltage of the washer fluid level sensor connector.
   (1) Is the voltage approx. 8.5 V or more?
   - **Yes → Perform step 4.**
   - **No → Check harness, meter and integrated unit, and replace if necessary.**

4) Does the meter indicator illuminate if you short the washer fluid level sensor connector?
- **Yes → Perform step 5.**
- **No → Check meter and integrated unit, and replace if necessary.**

5) Using a tester, measure the resistance of the washer fluid level sensor.
   (1) Turn over the mud guard.
   (2) Measure the resistance of the washer fluid level sensor.

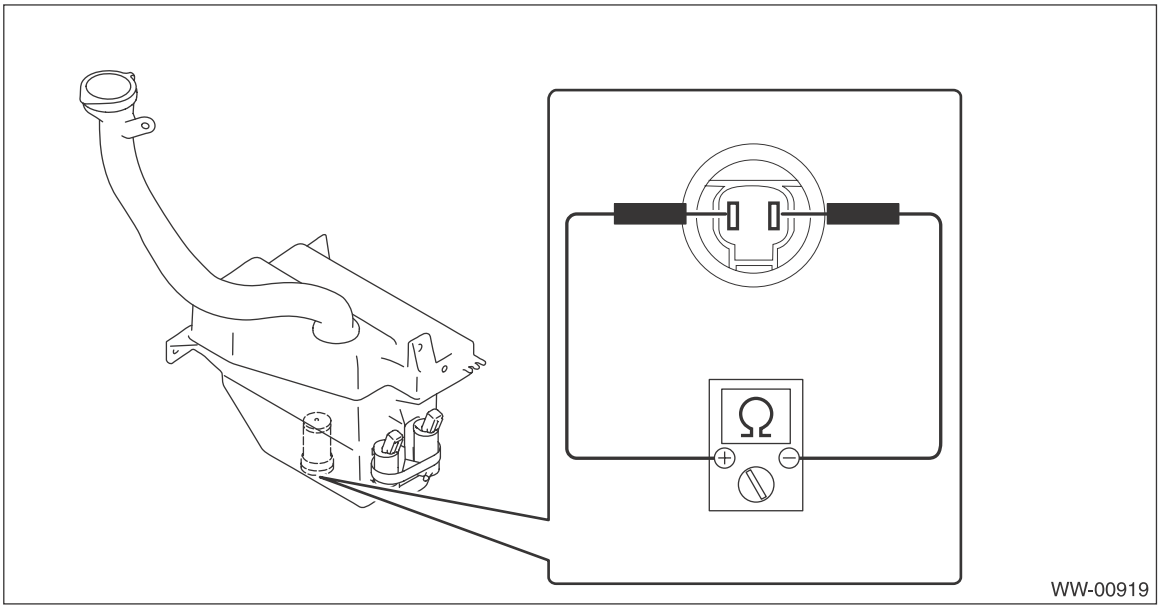

Amount of washer fluid in the tank	Standard
No remaining quantity (ON)	Less than 10 Ω
There is remaining quantity (OFF)	1 MΩ or more

(3) Is the resistance within the standard?

- **Yes → Normal operation.**
- **No → Replace the washer fluid level sensor along with the washer tank.**

6. Front Wiper Arm

A: REMOVAL

CAUTION:
Follow the steps below when standing up the wiper arm. Not following the steps may cause contacting of wiper arms and damages of wiper arms.
1. Stand up the driver's side wiper arm.
2. Stand up the passenger's side wiper arm.
Fold the wiper arms in the reverse order.
1) Open the front hood.
2) Remove the front wiper arm assembly.
   (1) Remove the cap.
   (2) Remove the nuts, and remove the front wiper arm assembly.

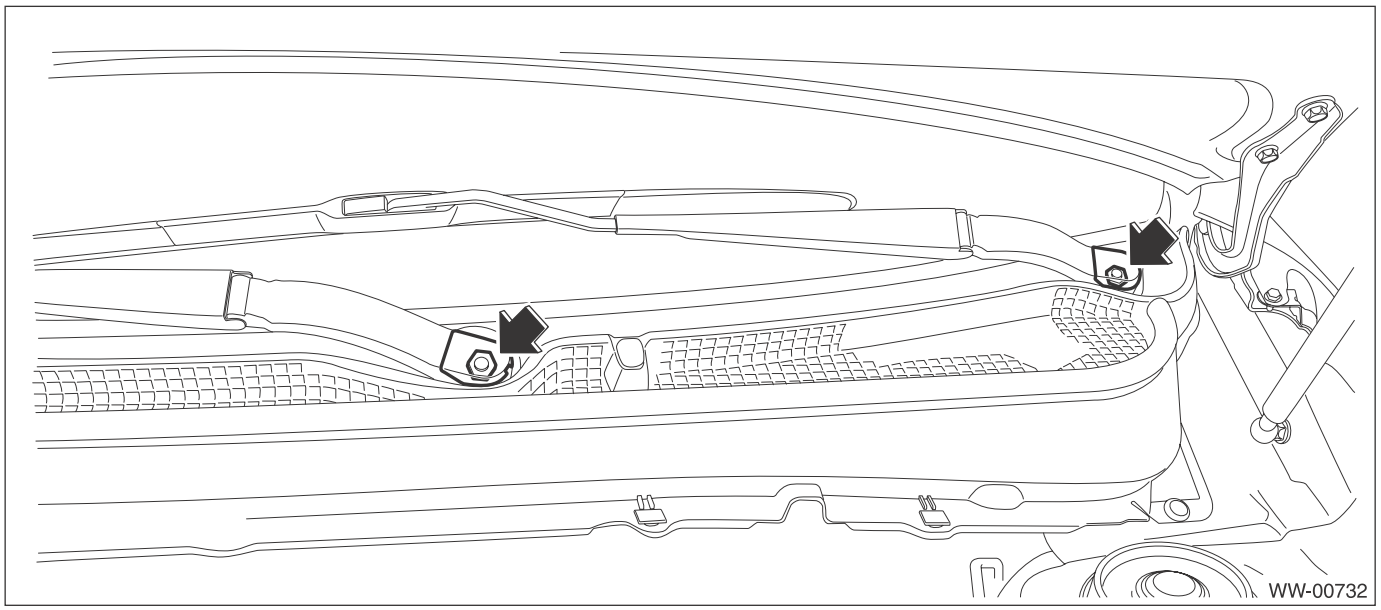

B: INSTALLATION

CAUTION:
Follow the steps below when tilting the wiper arm. Not following the steps may cause contacting of wiper arms and damages of wiper arms.

1. Tilt the passenger's side wiper arm.

2. Tilt the driver's side wiper arm.

1) Install the wiper arm assembly.

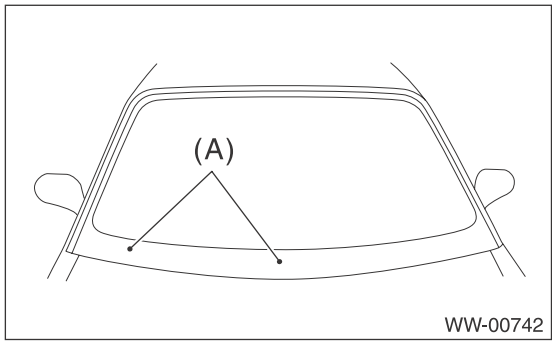

Tightening torque:
22 N·m (2.24 kgf-m, 16.2 ft-lb)

(1) Install the wiper arm assembly so that the wiper blade aligns with the ceramic print point mark (A) on windshield glass.

(2) Tighten the wiper arm assembly to specified torque and install the cap.

2) Operate the wiper to check whether the wiper blade aligns with the point mark. If not, perform installation over again.

7. Front Wiper Motor and Link

A: REMOVAL

1) Disconnect the ground cable from battery.
2) Remove the front wiper arm assembly.

CAUTION:
Follow the steps below when standing up the wiper arm. Not following the steps may cause contacting of wiper arms and damages of wiper arms.
1. Stand up the driver's side wiper arm.
2. Stand up the passenger's side wiper arm.
Fold the wiper arms in the reverse order.

(1) Remove the cap.
(2) Remove the nuts, and remove the front wiper arm assembly.

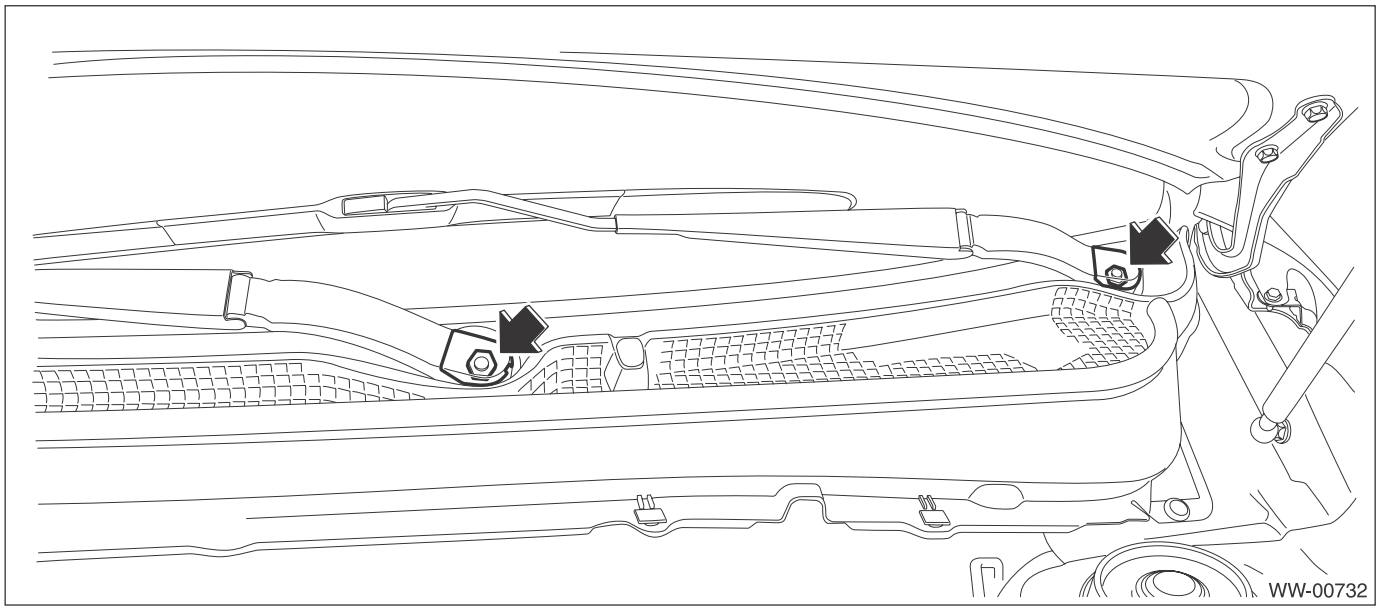

3) Remove the cowl panel side.
(1) Detach the pins of the cowl panel side.
(2) Remove the cowl panel side from inside the fender panel by pulling it.

CAUTION:
Applying excessive pulling force may damage the cowl panel side. If it is difficult to remove, use a plastic remover or equivalent tool.

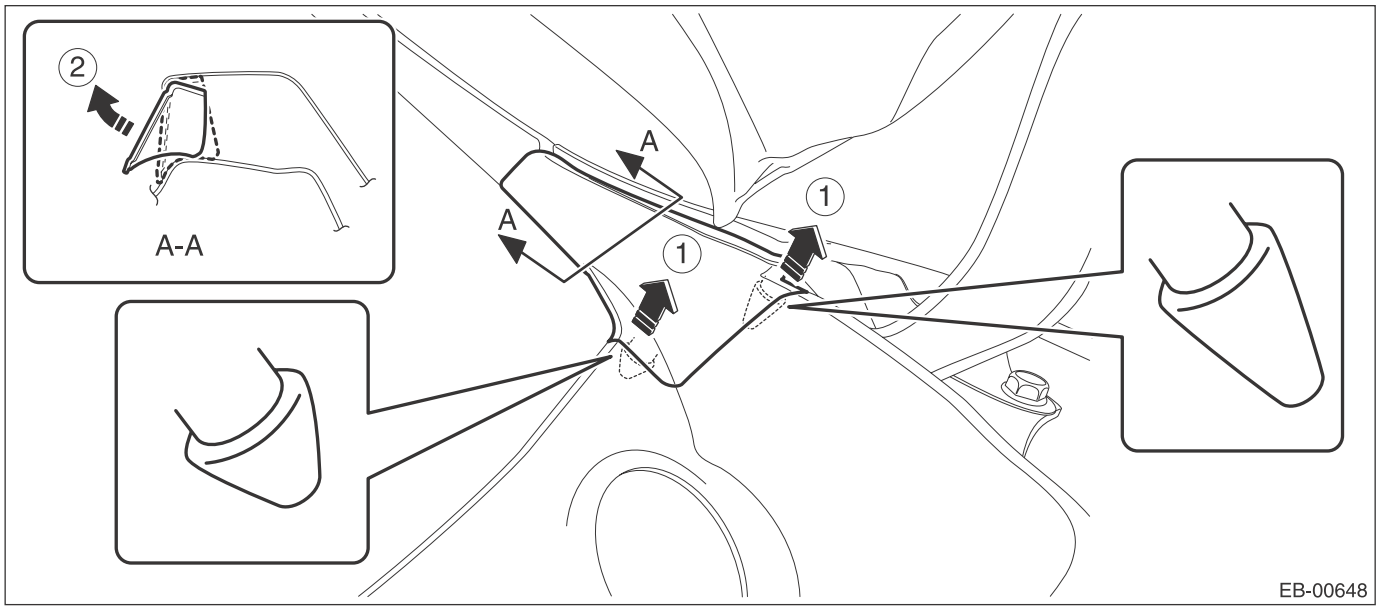

4) Remove the cowl panel.
(1) Release the clip (A).
(2) Push the claw of the clip (B) from both sides to remove it.

CAUTION:
When removing the clip (B), push the claw of the clip from both sides.
The clip may be damaged if forcibly pulled.

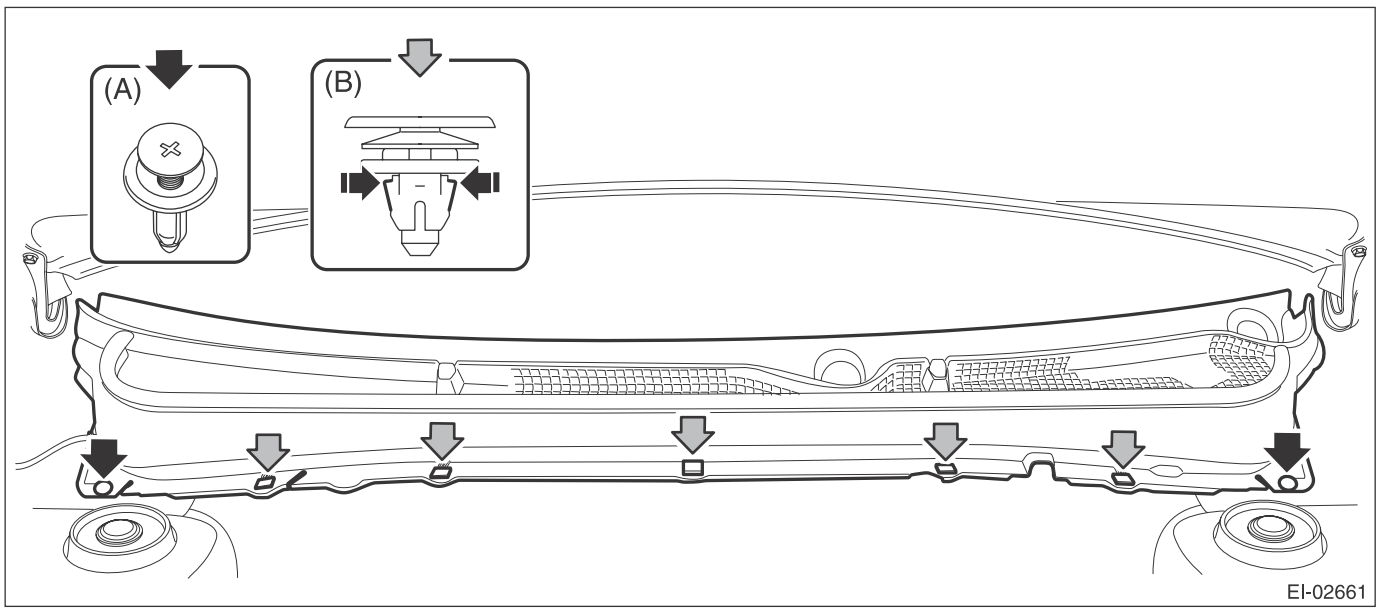

(3) Disconnect the washer hose.

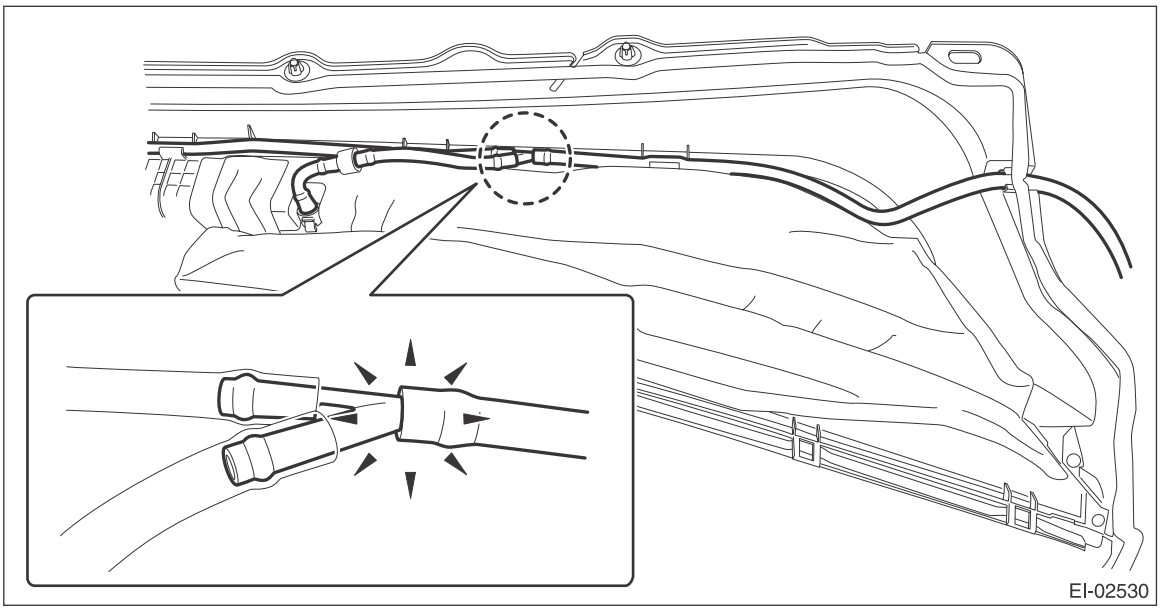

5) Remove the wiper link assembly.
(1) Disconnect the motor connector.
(2) Remove the bolts and harness clips and remove the wiper link assembly.

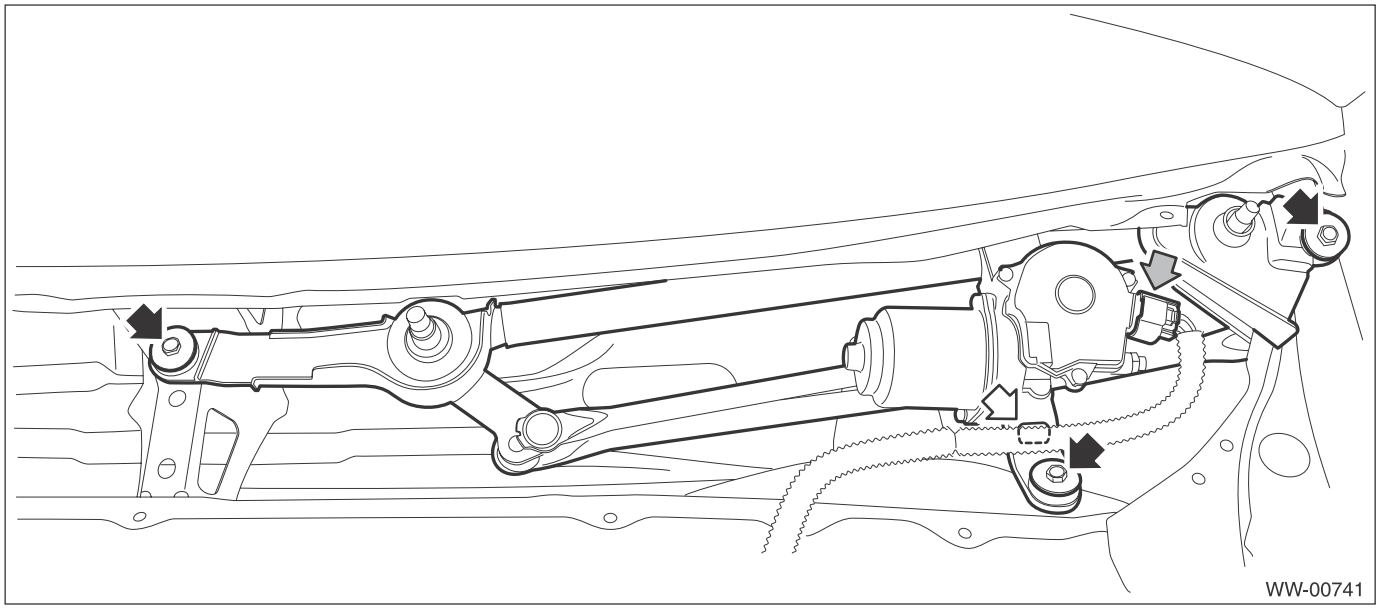

6) Remove the wiper motor assembly.
(1) Remove the nuts on the link plate and motor assembly to be disconnected from the link assembly.

(2) Remove the nuts and remove the wiper motor assembly.

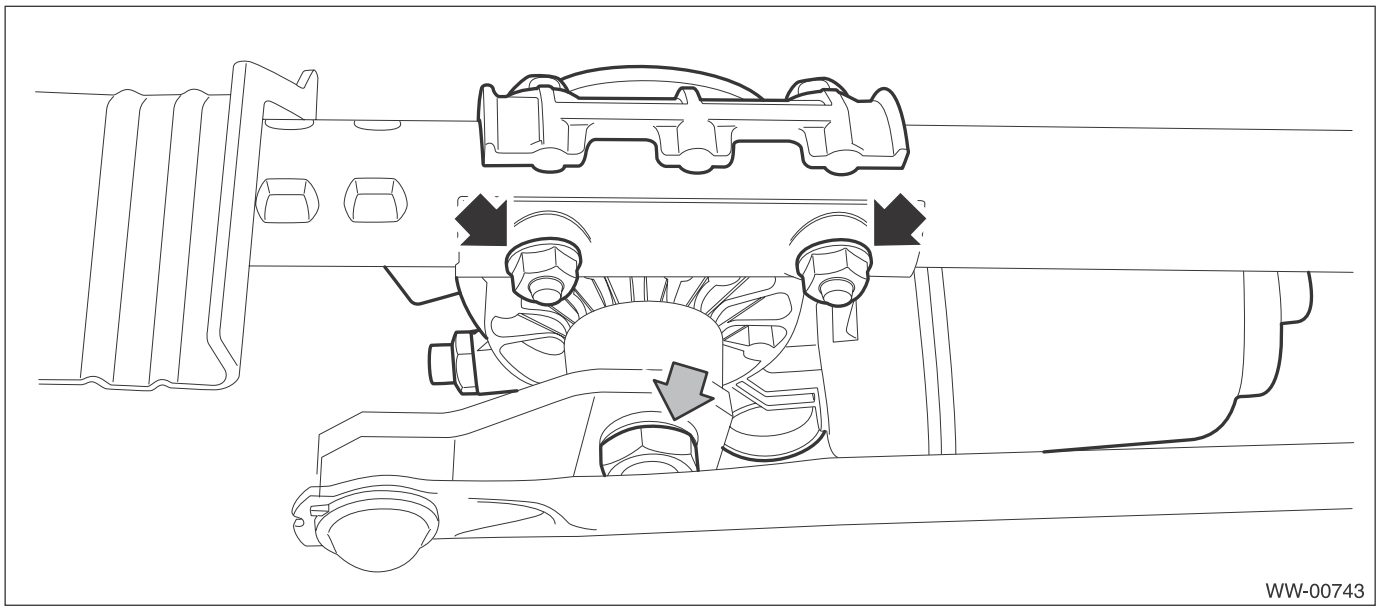

B: INSTALLATION

1) Connect the ground cable to battery.
2) To check whether the motor is at the automatic stop position, connect the harness to the motor and switch the wiper switch to ON/OFF.
3) Disconnect the ground cable from battery.
4) Install the wiper motor assembly.

CAUTION:
Tighten the nuts so that the rod (A) and link plate (B) align.

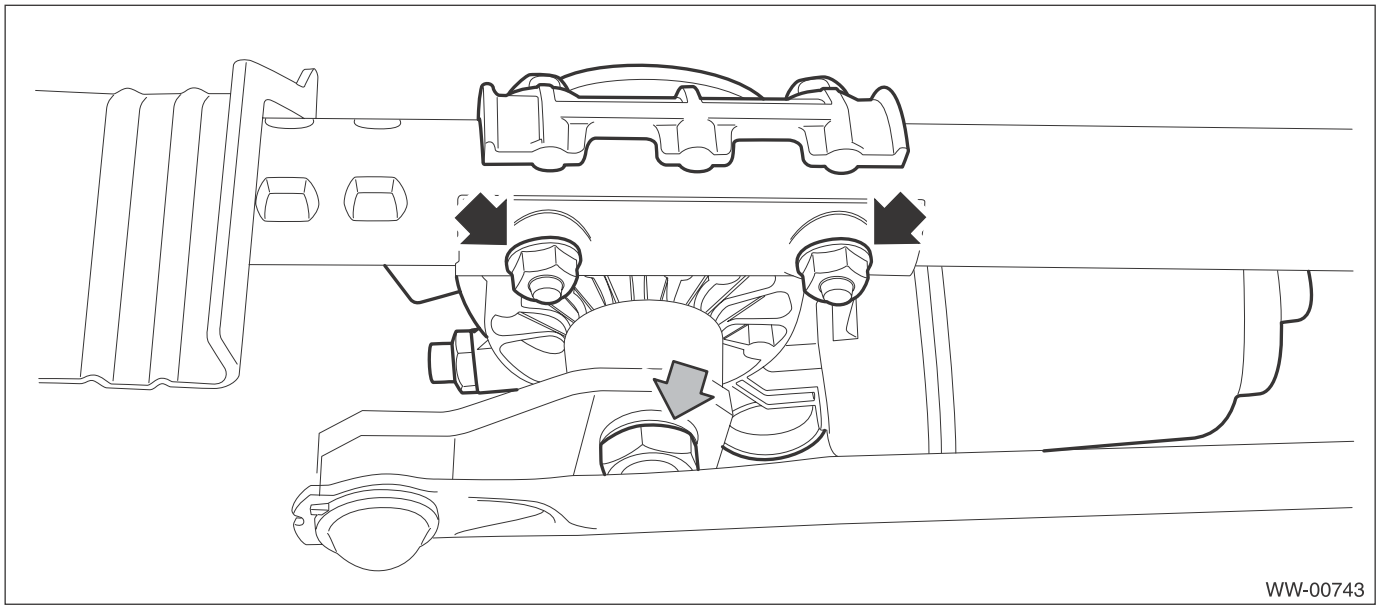

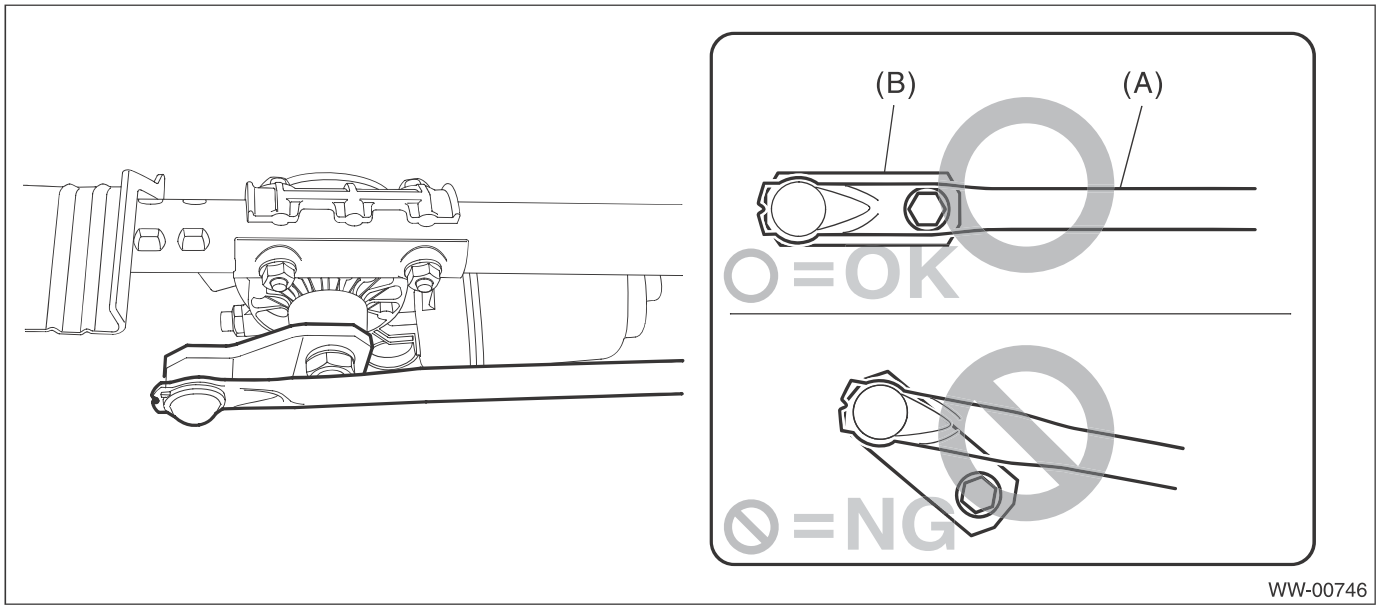

Tightening torque:
Refer to "COMPONENT" of "General Description". <Ref. to WW-3, FRONT WIPER, COMPONENT, General Description.>

5) Install the wiper link assembly and cowl panel in the reverse order of removal.

Tightening torque:
Refer to "COMPONENT" of "General Description". <Ref. to WW-3, FRONT WIPER, COMPONENT, General Description.>

C: INSPECTION

1) When the battery is connected to the terminal of connectors, confirm that the motor operates at low speed.
2) When the battery is connected to the terminal of connectors, confirm that the motor operates at high speed.
3) Connect the battery to the terminals of connector, then run the motor at low speed and disconnect the terminal in mid motion.
4) Connect the battery and confirm that the motor stops at the automatic stop position after the motor operates at low speed again.

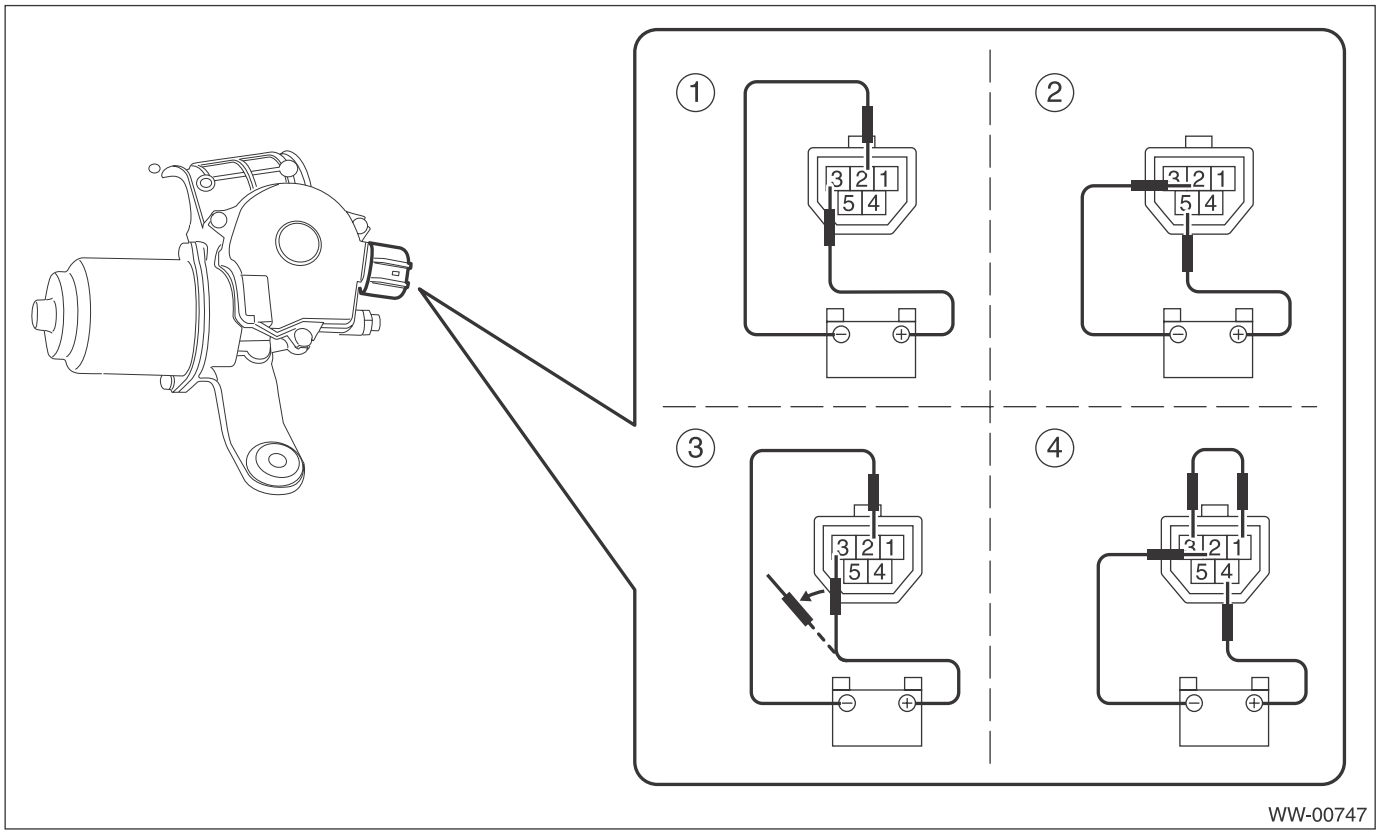

8. Front Washer Nozzle

A: REMOVAL

1) Disconnect the ground cable from battery.
2) Remove the front wiper arm assembly.

CAUTION:
Follow the steps below when standing up the wiper arm. Not following the steps may cause contacting of wiper arms and damages of wiper arms.
1. Stand up the driver's side wiper arm.
2. Stand up the passenger's side wiper arm.
Fold the wiper arms in the reverse order.

(1) Remove the cap.
(2) Remove the nuts, and remove the front wiper arm assembly.

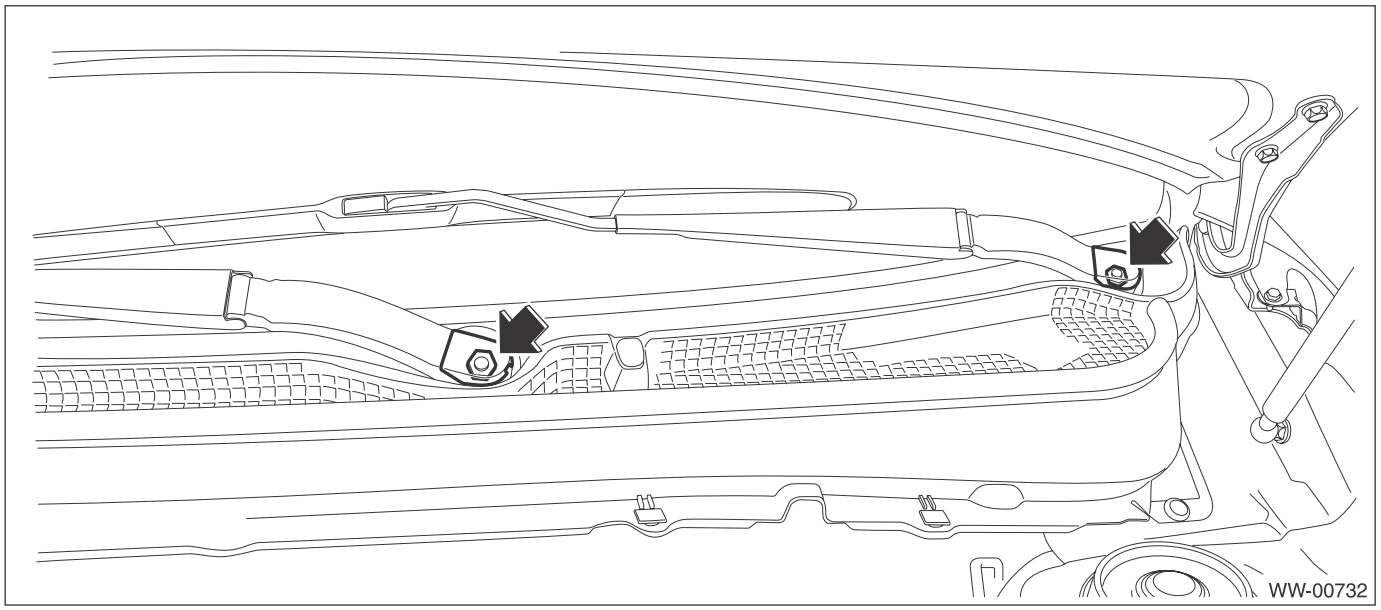

3) Remove the cowl panel side.
(1) Detach the pins of the cowl panel side.
(2) Remove the cowl panel side from inside the fender panel by pulling it.

CAUTION:
Applying excessive pulling force may damage the cowl panel side. If it is difficult to remove, use a plastic remover or equivalent tool.

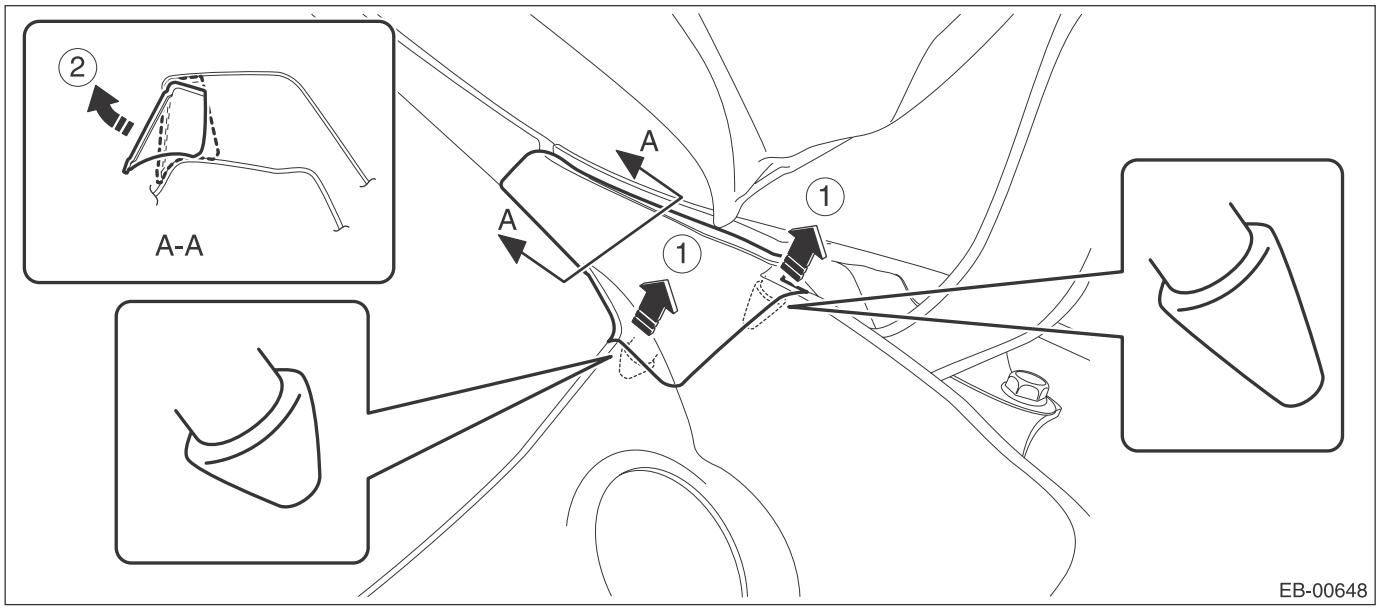

4) Remove the cowl panel.
(1) Release the clip (A).
(2) Push the claw of the clip (B) from both sides to remove it.

CAUTION:
When removing the clip (B), push the claw of the clip from both sides.
The clip may be damaged if forcibly pulled.

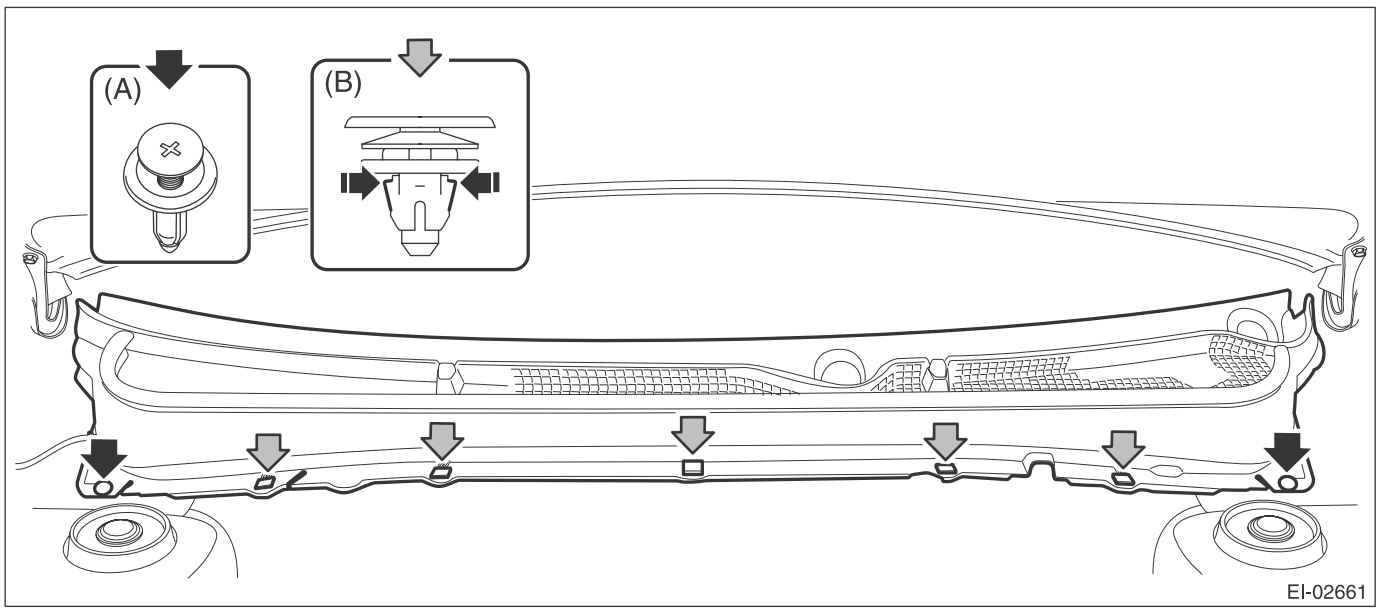

(3) Disconnect the washer hose.

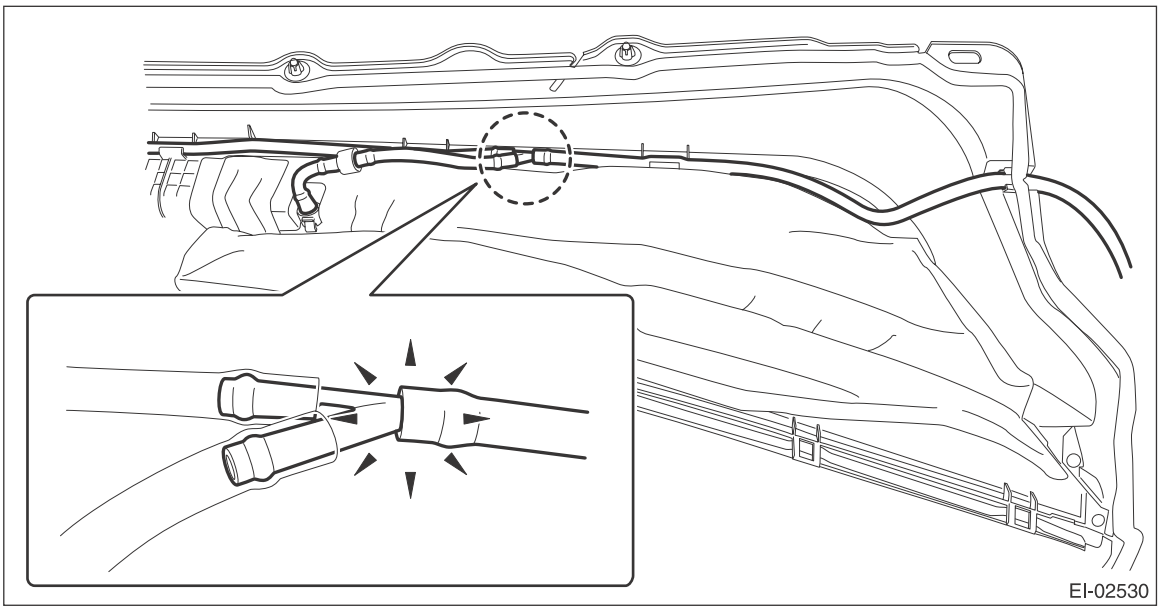

5) Remove the front washer nozzle.
(1) Push the claw using a flat tip screwdriver, etc.
(2) When the washer nozzle lifts up, pull out the nozzle using a clip remover, etc.
(3) Disconnect the washer hose and remove the washer nozzle.

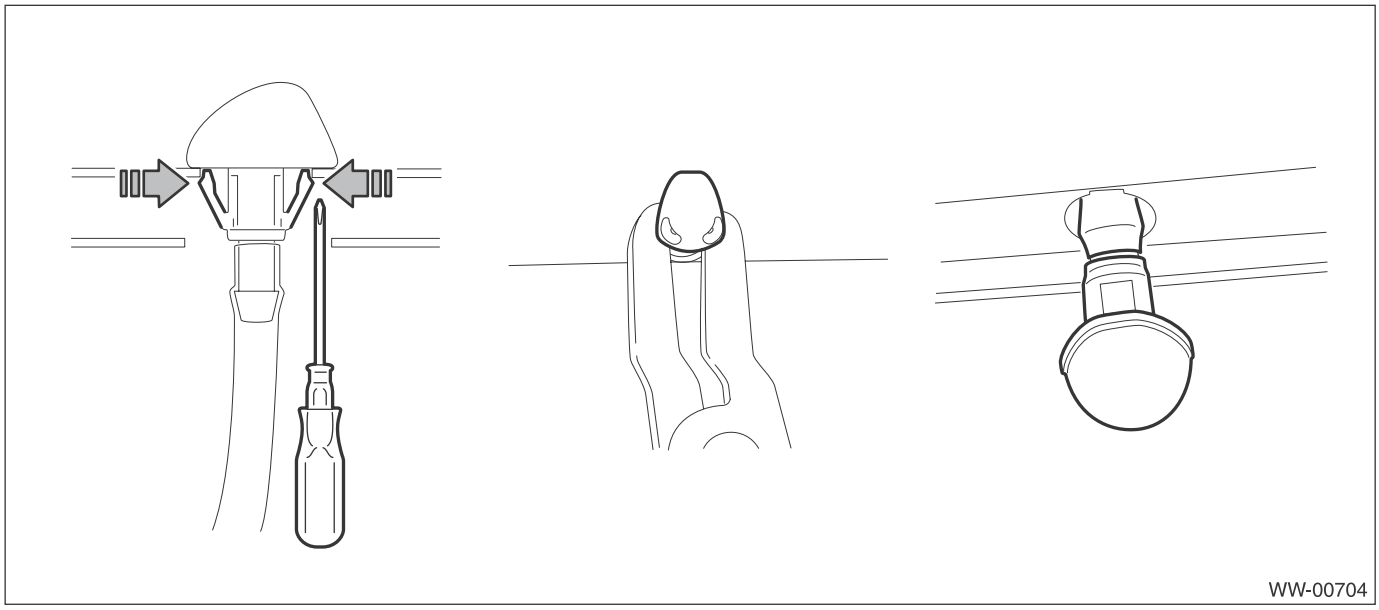

B: INSTALLATION

1) Install each part in the reverse order of removal.

Tightening torque:
Refer to "COMPONENT" of "General Description". <Ref. to WW-3, FRONT WIPER, COMPONENT, General Description.>

2) Adjust the washer nozzle position. <Ref. to WW-35, ADJUSTMENT, Front Washer Nozzle.>

C: INSPECTION

- Make sure the nozzle and hose are not clogged.
- Make sure the hose is not bent.

D: ADJUSTMENT

1) Turn the wiper switch to OFF position.
2) While the vehicle is at a standstill, adjust the washer injection position as shown in the figure.

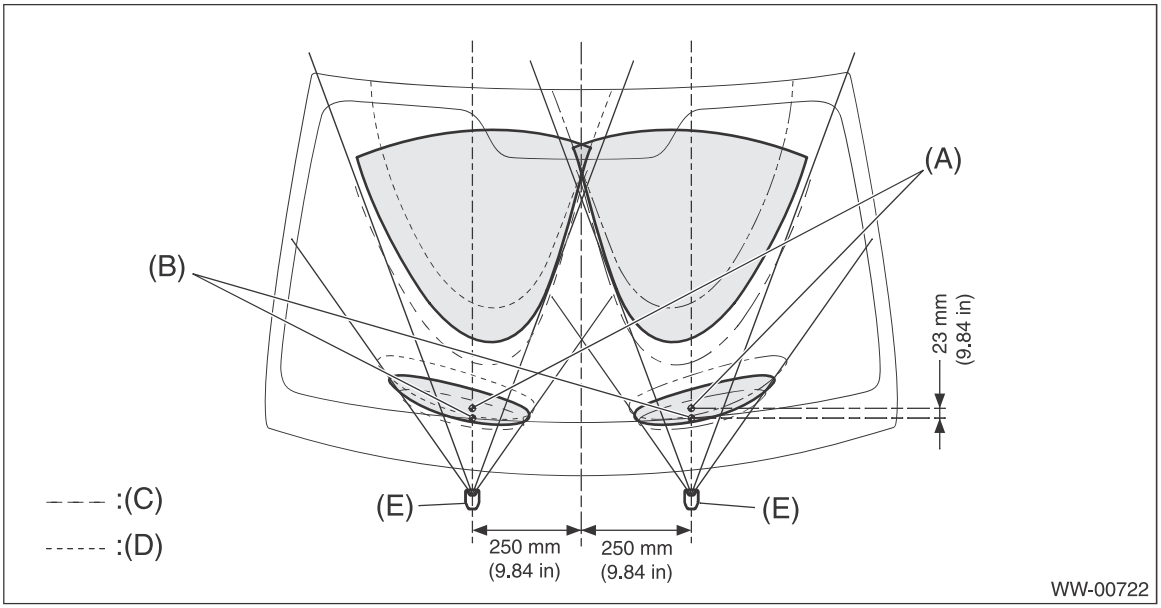

(A) Hitting point center
(B) Lower-side spray position center
(C) Washer fluid elevation angle/dispersal angle lower limit
(D) Washer fluid elevation angle/dispersal angle upper limit
(E) Upper spray nozzle center of washer nozzle

9. Rear Wiper Arm

A: REMOVAL

1) Pull up the wiper arm cover.
2) Remove the nut and remove the wiper arm.

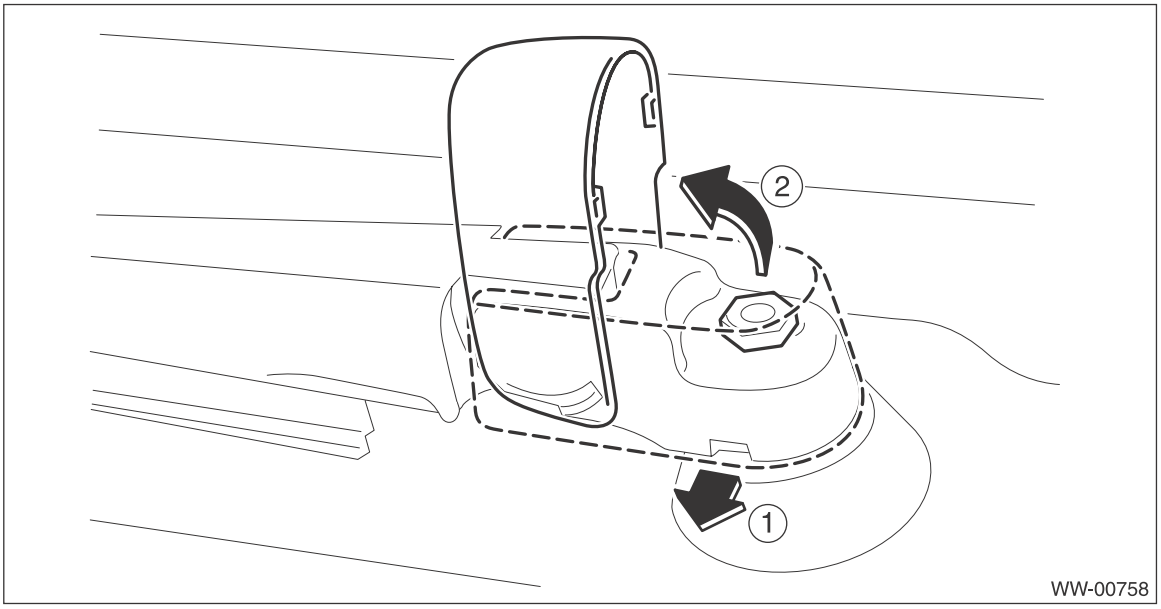

B: INSTALLATION

1) Install in the reverse order of removal.
2) Operate the rear wiper once.
3) Align the blade with the marking on the glass.

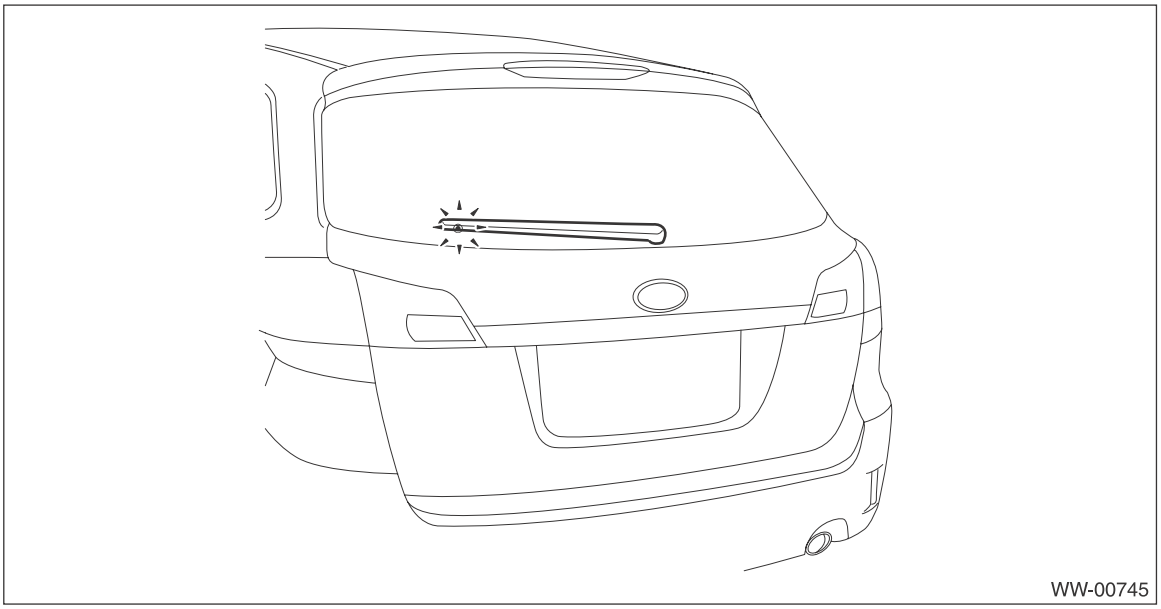

Tightening torque:
Refer to "COMPONENT" of "General Description". <Ref. to WW-4, REAR WIPER, COMPONENT, General Description.>

C: ADJUSTMENT

1) Operate the rear wiper once.
2) Align the blade with the marking on the glass.

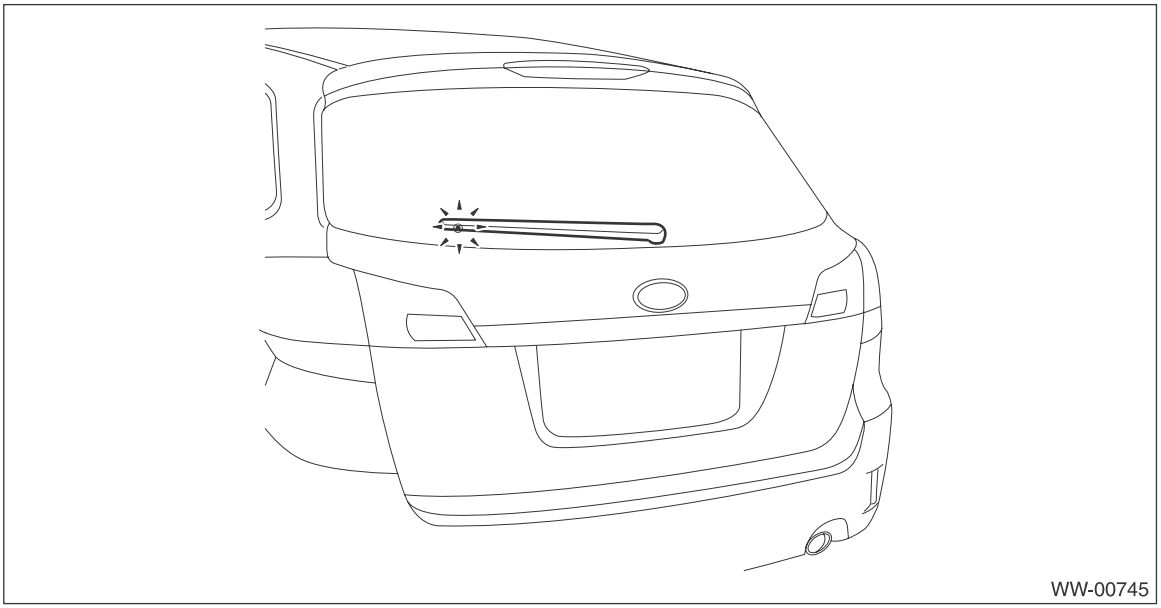

10.Rear Wiper Motor

A: REMOVAL

1) Disconnect the ground cable from battery.
2) Remove the rear wiper arm assembly.
   (1) Remove the wiper arm cover.
   (2) Remove the nut and remove the wiper arm.

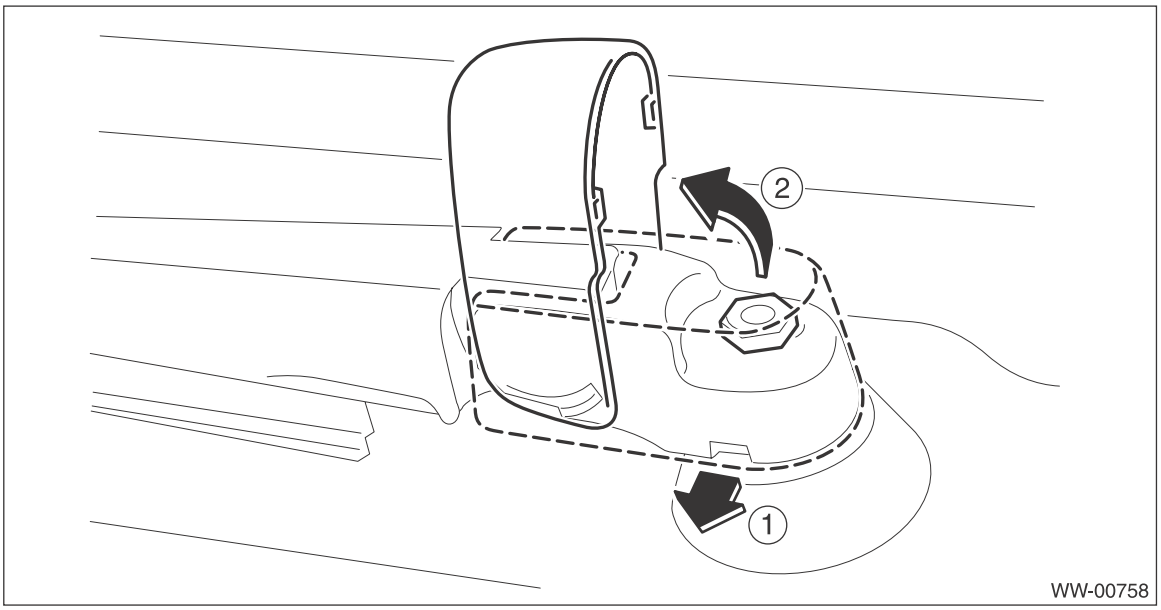

3) Remove the rear gate trim.
   (1) Remove the rear gate upper trim.
      a) Remove the claws on the trim edge.
      b) Disconnect the claws in the center of trim, and remove the rear gate upper trim.

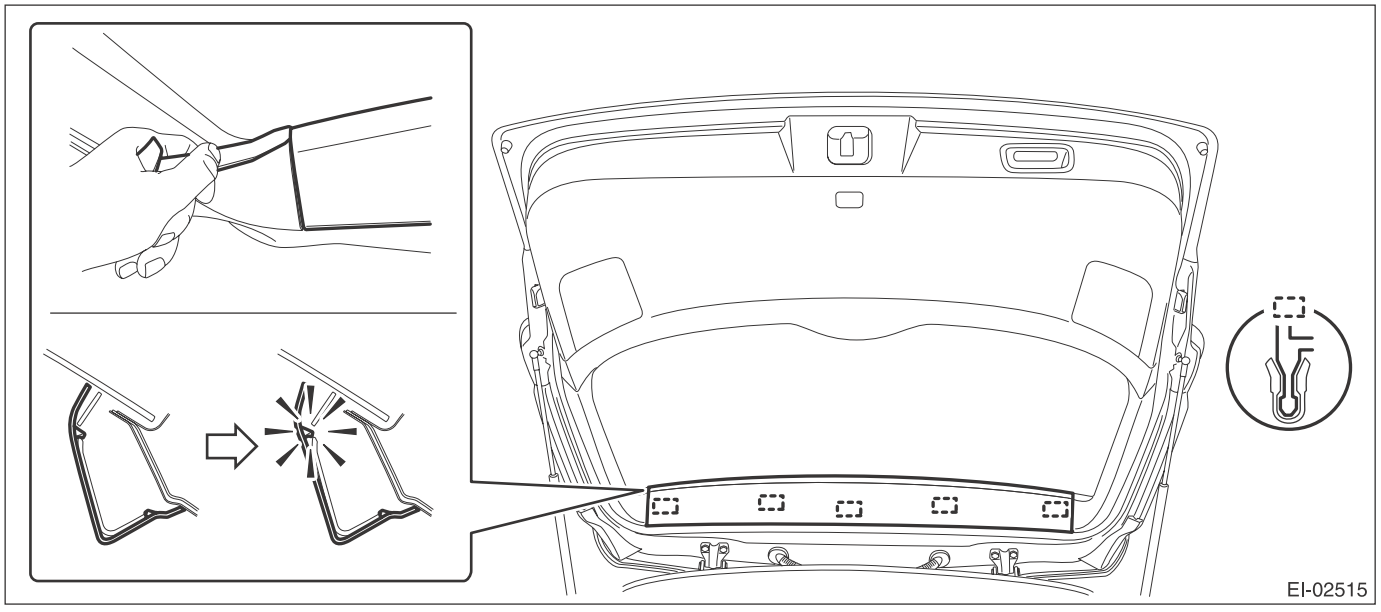

(2) Remove the rear gate pillar trim.
a) Release the claws.
b) Remove the claws on the bottom of trim, and remove the rear gate pillar trim.

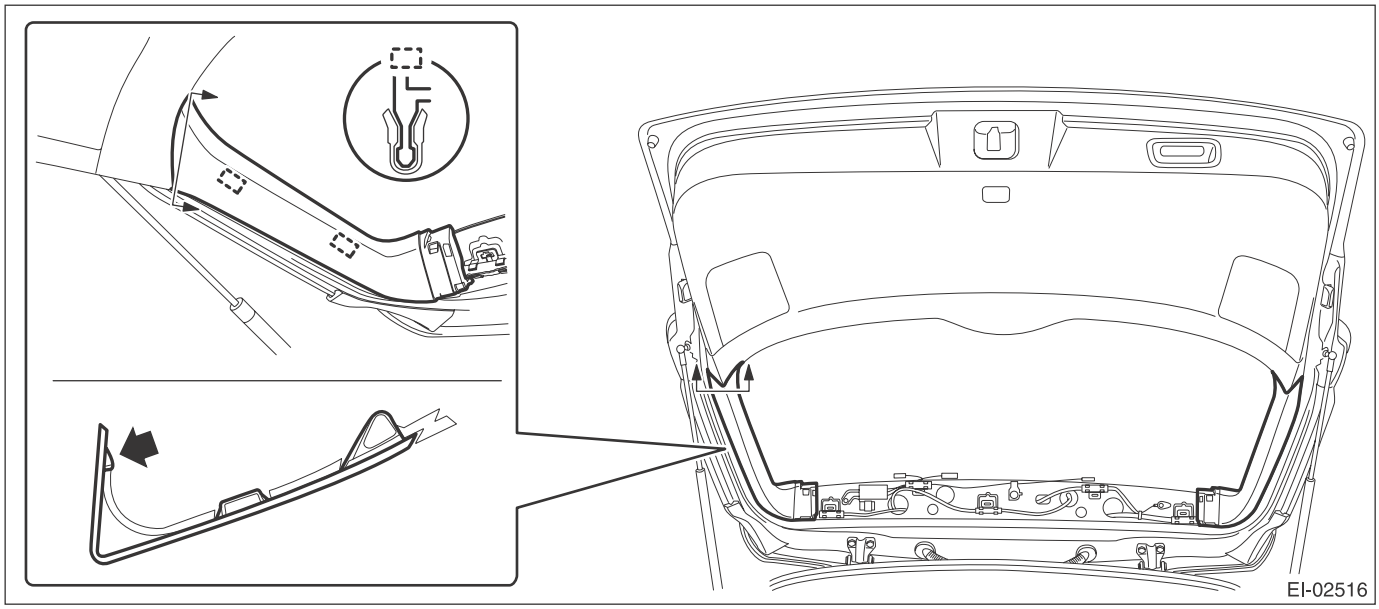

(3) Remove the hand grip of rear gate.

CAUTION:
- **Be careful not to scratch the trim.**
- **To protect the trim from damage, attach a protective tape to the tool in use.**

a) Insert a precision screwdriver (a).
b) With the screwdriver inserted, push it down to release the claw and pull it toward you.
c) Remove the screws and detach the hand grip.

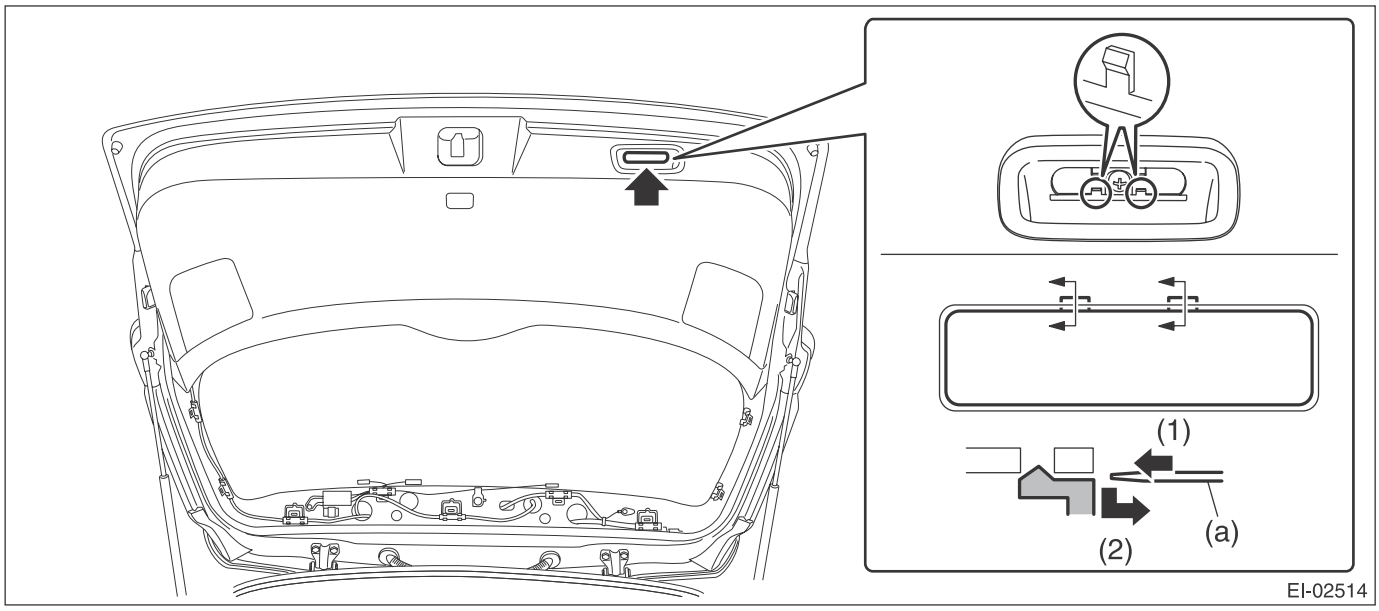

(4) Remove the rear gate lower trim.
a) Remove the clips on both ends.

b) Release the clips and remove the rear gate lower trim.

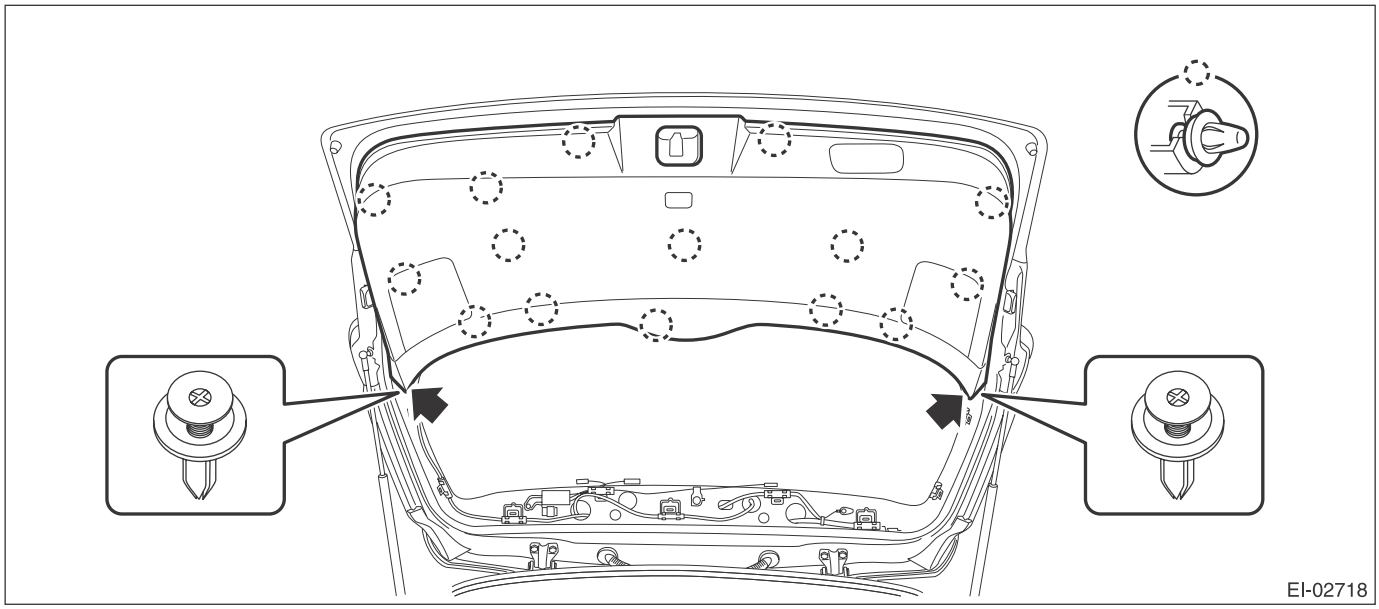

4) Remove the rear wiper motor assembly.
(1) Remove the harness clamp, and disconnect the harness connector of the wiper motor assembly.
(2) Remove the bolts, and then remove the wiper motor assembly.

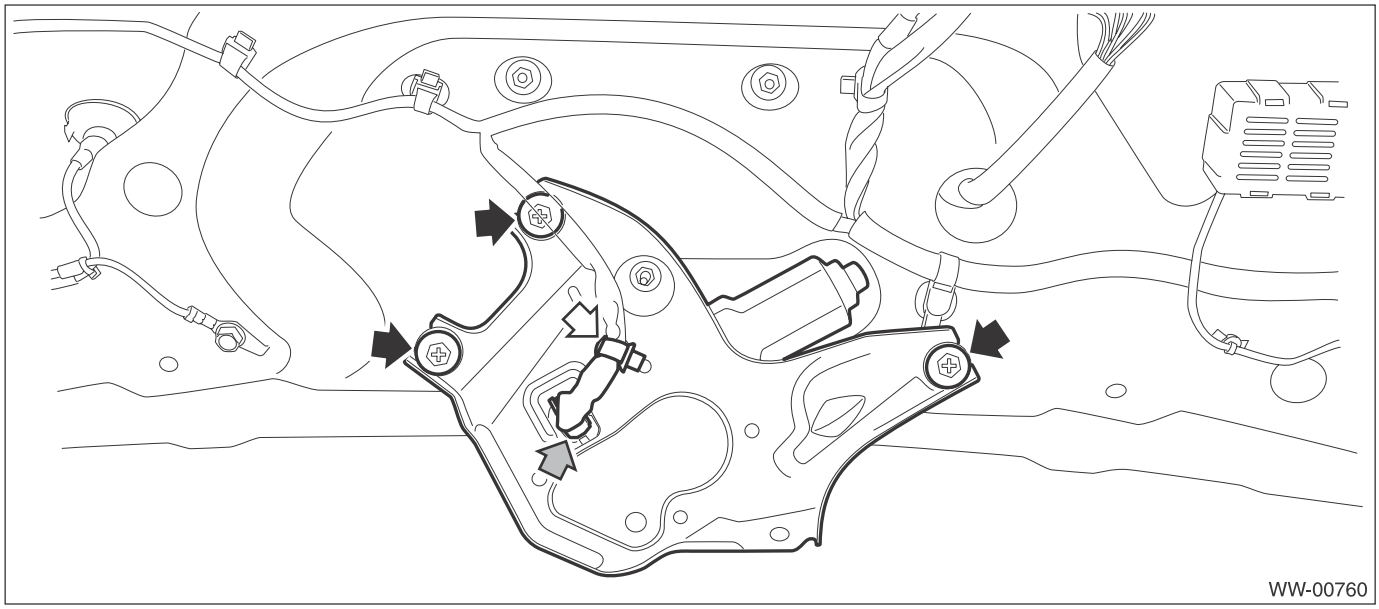

B: INSTALLATION

1) Install each part in the reverse order of removal.
2) Make sure that the ❍ mark on the pivot cap faces up, as shown in the figure.

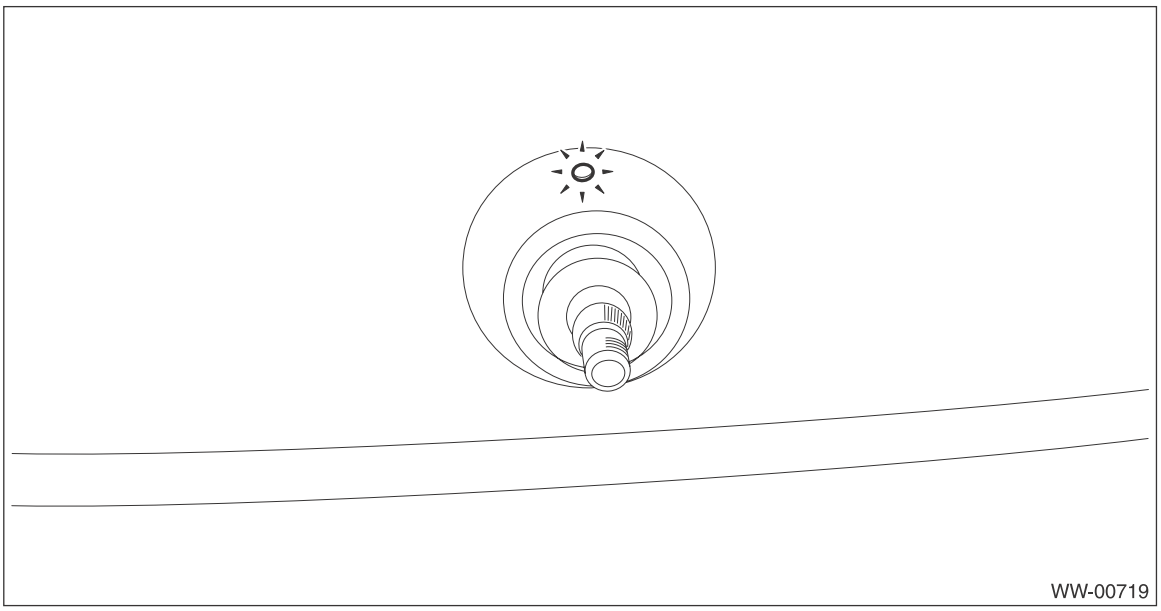

Tightening torque:
Refer to "COMPONENT" of "General Description". <Ref. to WW-4, REAR WIPER, COMPONENT, General Description.>

C: INSPECTION

1) Connect the battery to the wiper motor connector and confirm that wiper motor operates.
2) Connect the battery to the terminals of connector, then run the motor and disconnect the terminal in mid motion.
3) Connect the battery and confirm that the motor stops at the automatic stop position after the motor operates at low speed again.

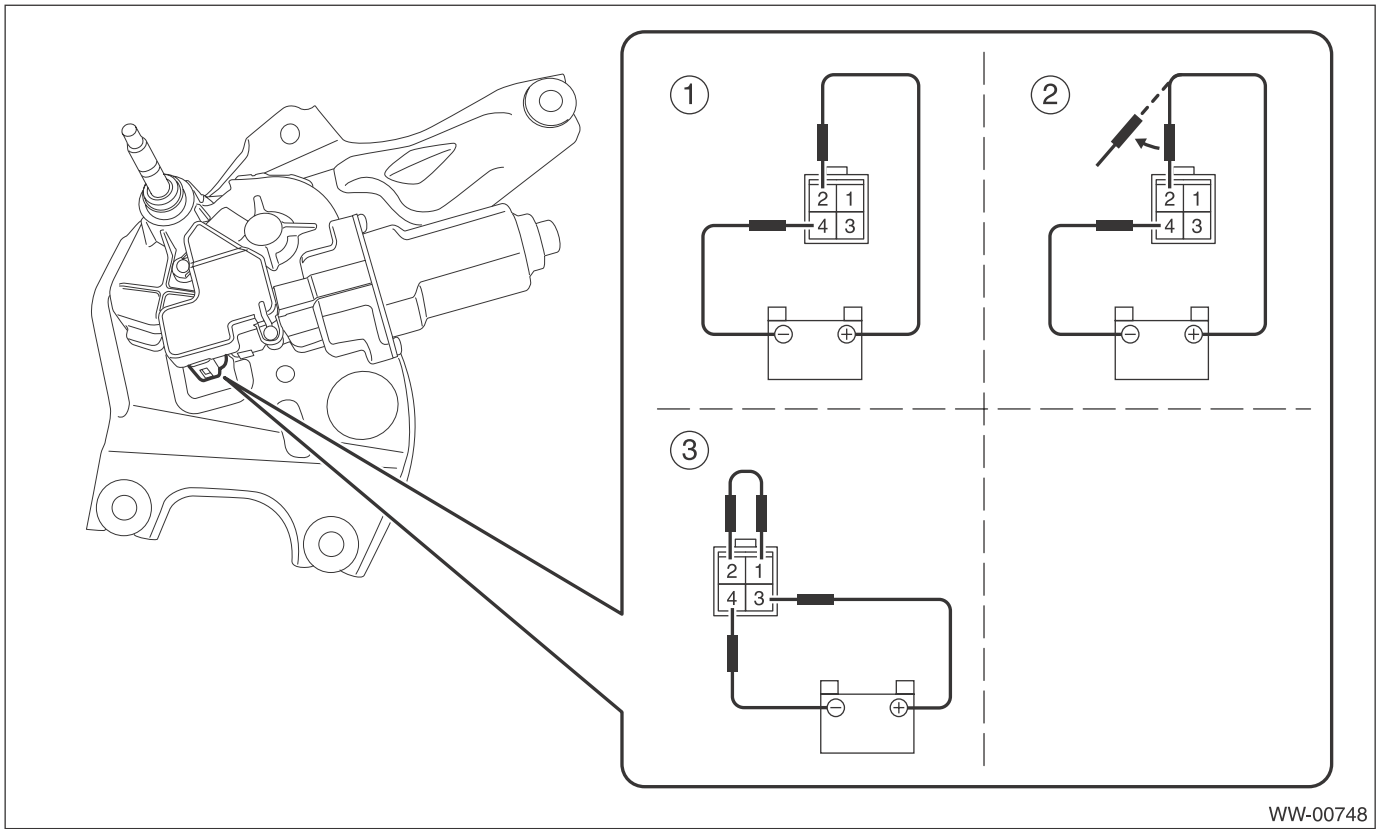

11.Rear Washer

A: REMOVAL

1) Disconnect the ground cable from battery.
2) Remove the rear gate upper trim.
   (1) Remove the claws on the trim edge.
   (2) Disconnect the claws in the center of trim, and remove the rear gate upper trim.

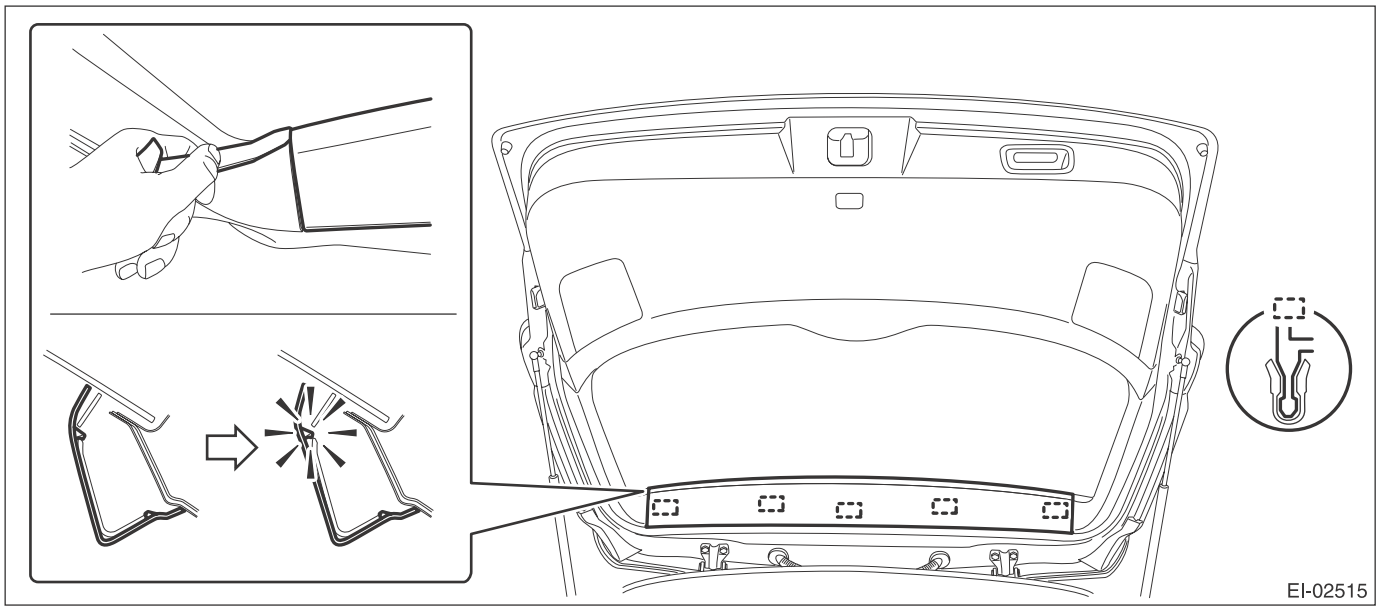

3) Remove the high-mounted stop light.
   (1) Remove the nuts.

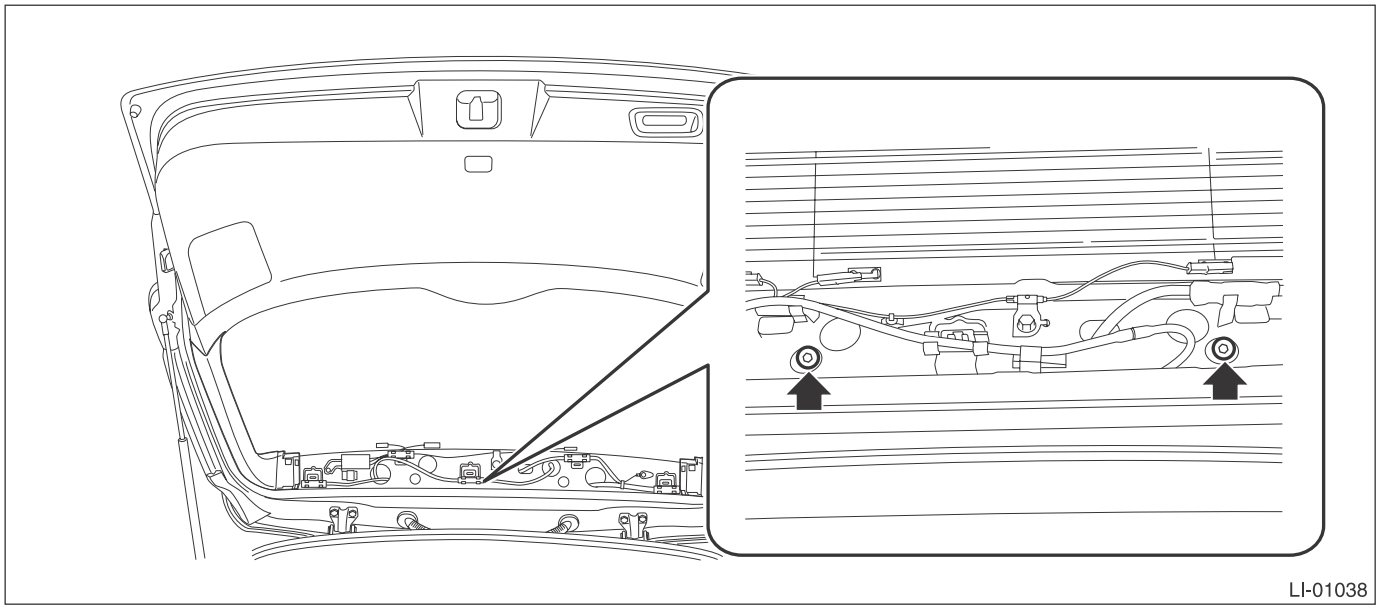

(2) Disconnect the connector and remove the high-mounted stop light.

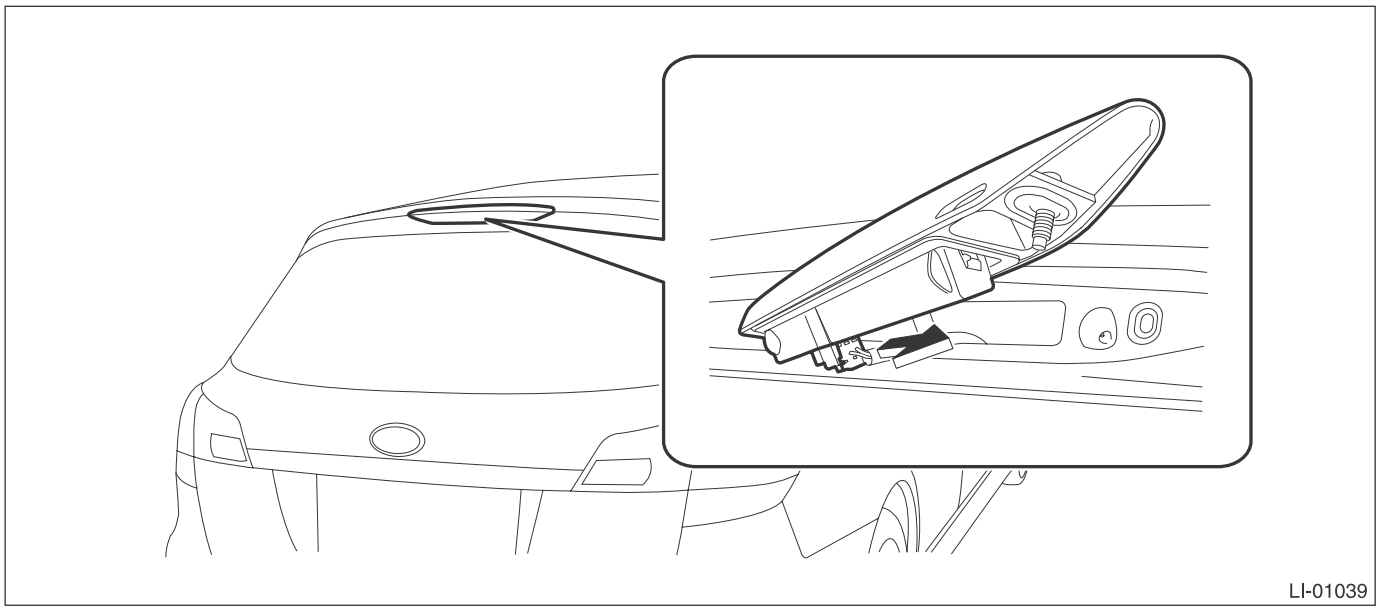

4) Remove the rear washer nozzle.

CAUTION:
Before removing, apply protective tape to the body panel and used tools not to damage the rear gate panel.

(1) Push the claw using a flat tip screwdriver, etc.
(2) When the washer nozzle lifts up, pull out the nozzle using a clip remover, etc.
(3) Disconnect the washer hose and remove the washer nozzle.

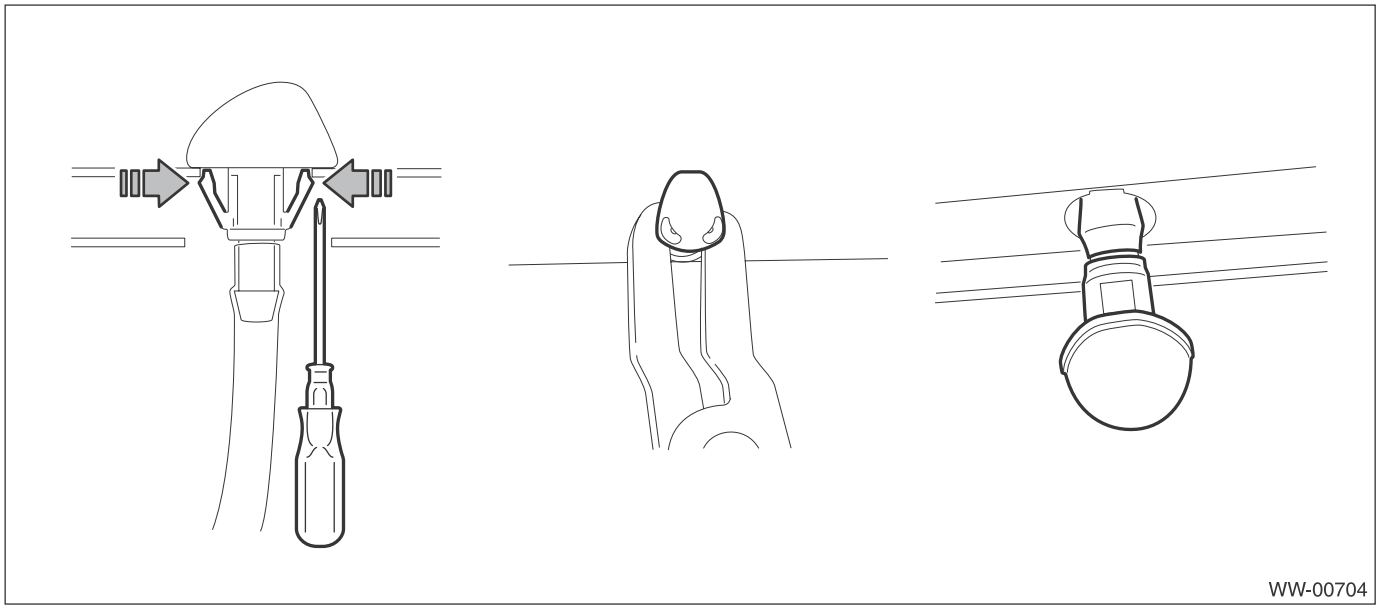

B: INSTALLATION

1) Install each part in the reverse order of removal.

Tightening torque:
High-mounted stop light assembly: 4.5 N·m (0.46 kgf-m, 3.3 ft-lb)

2) Check the washer nozzle position. <Ref. to WW-45, VISUAL INSPECTION, INSPECTION, Rear Washer.>

C: INSPECTION

1. VISUAL INSPECTION

Check for the following items, and if any malfunction is found, replace the corresponding part.
- Make sure the nozzle and hose are not clogged.
- Make sure the hose is not bent.

2. INSPECTING THE SPRAY POSITION

1) Turn the wiper switch to OFF position.
2) While the vehicle is stopped, check that the washer spray position is as shown in the figure.
3) After inspection, if the spray position is out of the specified range, adjust the position or replace with the new washer nozzle.

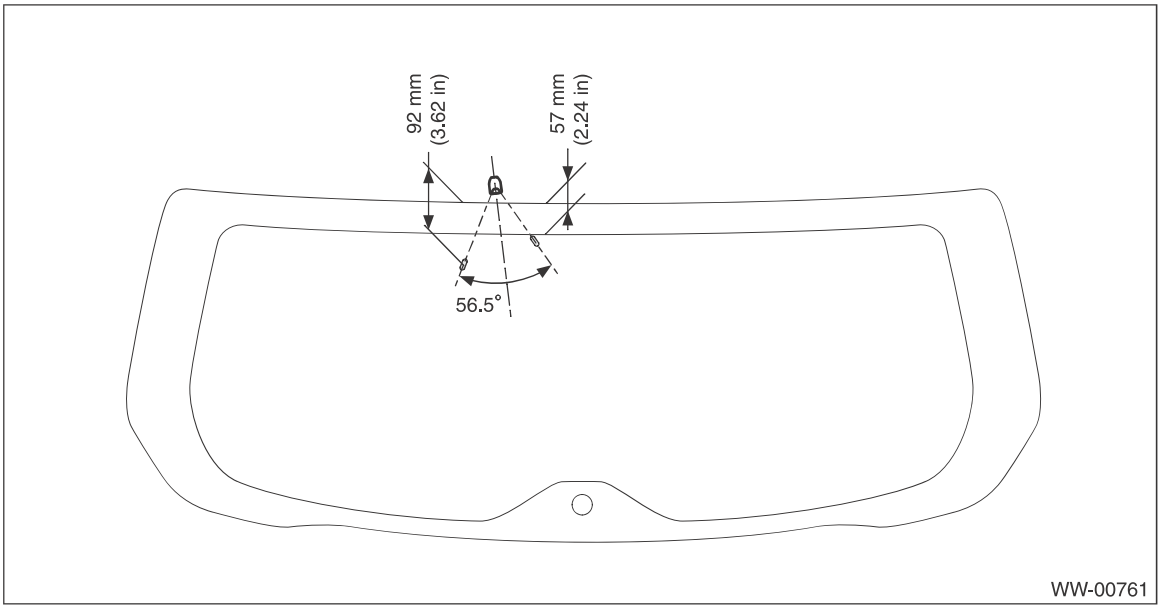

ENTERTAINMENT

ET

		Page
1.	General Description	2
2.	Audio System	3
3.	Navigation System	4
4.	Audio	8
5.	Front Speaker	10
6.	Rear Speaker	13
7.	Woofer	15
8.	Power Amplifier	17
9.	Antenna	18
10.	Noise Suppressor	26
11.	Steering Satellite Switch	28
12.	Navigation Body	33
13.	GPS Antenna	35
14.	Rearview Camera System	40
15.	Front Accessory Power Supply Socket	49
16.	Rear Accessory Power Supply Socket	53
17.	AUX Input Terminal	56

1. General Description

A: CAUTION

• Before disassembling or reassembling parts, always disconnect the battery ground cable from battery. When replacing the audio, control module and other parts provided with memory functions, record the memory contents before disconnecting the battery ground cable. Otherwise, the memory is cleared.
• Reassemble the parts in the reverse order of disassembly procedure unless otherwise indicated.
• Adjust parts to the given specifications.
• Connect the connectors securely when reassembling.
• After reassembly, make sure functional parts operate smoothly.

B: PREPARATION TOOL

1. GENERAL TOOL

DESCRIPTION	REMARKS
Circuit tester	Used for measuring resistance and voltage.
STEERING WHEEL PULLER	Used for removing the steering wheel.

2. Audio System

A: WIRING DIAGRAM

1. AUDIO

Refer to “Audio System” in the wiring diagram. <Ref. to WI-58, WIRING DIAGRAM, Audio System.>

B: INSPECTION

Symptoms	Repair order
No power coming in. (No display and no sound from speakers)	1. Check the fuse and power supply for audio. 2. Check the audio ground. 3. Remove the audio and repair them.
A specific speaker does not operate.	1. Check the speaker. 2. Check the output circuit between audio and speaker.
Audio generates noise with engine running.	1. Check the audio ground. 2. Check the generator. 3. Check the ignition coil. 4. Remove the audio and repair them.
Volume is low in AM and FM modes or interference noise occurs.	1. Check the antenna. 2. Check the antenna amplifier. 3. Check the rear window defogger. 4. Check the noise suppressor. 5. Check the audio ground. 6. Remove the audio and repair them.
Rear window defogger generates noise when it operate.	1. Check the rear window defogger.

C: NOTE

For operation procedures of each component of the audio system, refer to the respective section.

- Audio unit: <Ref. to ET-8, Audio.>
- Power amplifier: <Ref. to ET-17, Power Amplifier.>
- Front side speaker: <Ref. to ET-10, FRONT SIDE SPEAKER, REMOVAL, Front Speaker.>
- Front door speaker: <Ref. to ET-11, FRONT DOOR SPEAKER, REMOVAL, Front Speaker.>
- Rear door speaker: <Ref. to ET-13, Rear Speaker.>
- Woofer: <Ref. to ET-15, Woofer.>
- Antenna: <Ref. to ET-18, Antenna.>
- Noise suppressor: <Ref. to ET-26, Noise Suppressor.>
- Steering satellite switch: <Ref. to ET-28, Steering Satellite Switch.>

3. Navigation System

A: WIRING DIAGRAM

Refer to “Navigation System” in the wiring diagram. <Ref. to WI-167, WIRING DIAGRAM, Navigation System.>

B: INSPECTION

NOTE:
If no problems are found in “CHECK NAVIGATION OPERATION”, “CHECK EACH CONNECTION” and “CHECK EACH VEHICLE SIGNAL” as described below, check the navigation system circuit. <Ref. to WI-167, WIRING DIAGRAM, Navigation System.>

1. CHECK NAVIGATION OPERATION

Start the engine and check that the opening screen is displayed.
Standard: Opening screen is displayed.
OK: Normal.
NG: If the screen is not displayed, check the following items.

- The map disk (DVD-ROM) is set in the navigation system unit
- Check the connection of the power supply connector at the backside of the navigation unit. If wire connection is correct or has got repaired, check again that the opening screen is displayed.

If it is not displayed at this time, it indicates the navigation unit trouble.

2. CHECK EACH CONNECTION

1) Press the «Audio» key to display the AUDIO OFF screen.
2) Touch the screen in the order of (1) to (6) shown in the figure.

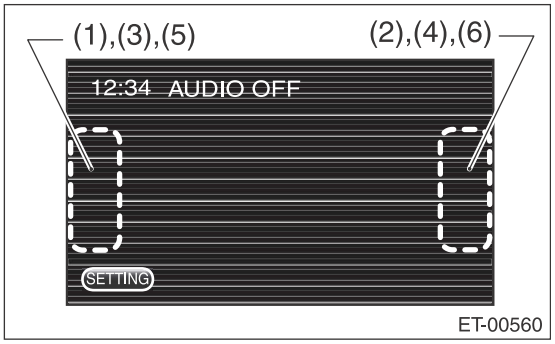

3) The display will switch to the Dealer Diag Menu screen.



• CHECK MICROPHONE, AUX AND REARVIEW CAMERA

NOTE:
Before starting inspections, check the safety around the rear end of the vehicle and then turn the ignition switch to ON.
1) Touch {Connection Info.} on the «Dealer Diag Menu» screen.
2) Check that “Connect” is displayed in all the MIC, AUX and Camera items.

NOTE:
{AUX} item is not displayed, if the suitable mini jack is not inserted in the AUX terminal in the console box.
Connect: Normal.
NC: Abnormal. Check the signal line connection. If there are no problems, the unit could be faulty.

• CHECK GPS ANTENNA

NOTE:
When checking the GPS antenna, perform the check operation outdoors to improve the receiver sensitivity.
1) Touch {Vehicle Signal Info.} on the «Dealer Diag Menu» screen.
2) Check that “Connect” is displayed in the GPS Antenna item.
Connect: Normal.
NC: Abnormal. Check the GPS antenna connection.

• CHECK UART COMMUNICATION

NOTE:
When checking the GPS antenna, perform the check operation outdoors to improve the receiver sensitivity.
1) Touch {Vehicle Signal Info.} on the «Dealer Diag Menu» screen.
2) Check that “ON” is displayed in the UART signal item.
OK: Normal.
NG: Abnormal. Check the signal line connection. If there are no problems, the unit could be faulty.

NOTE:
If the UART signal line connector is not connected, the marker line is not displayed when the rearview camera image is displayed.

3. CHECK EACH VEHICLE SIGNAL

1) Press the «Audio» key to display the AUDIO OFF screen.
2) Touch the screen in the order of (1) to (6) shown in the figure.

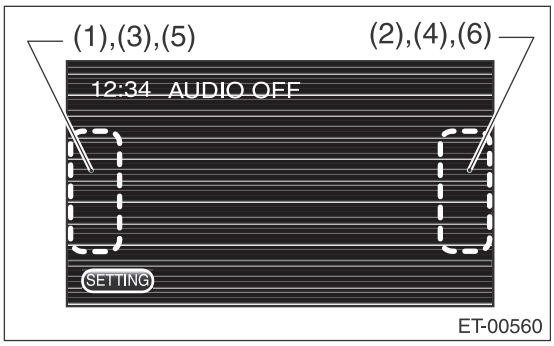

3) The display will switch to the Dealer Diag Menu screen.



• CHECK BACK SENSOR

1) Touch {Vehicle Signal Info.} on the «Dealer Diag Menu» screen.
2) Pull the parking brake and depress the brake pedal, then put the gear in reverse.
3) Make sure that “ON” is displayed in the Reverse item.
ON: Normal.
OFF: Abnormal. Check the signal line connection. If there are no problems, the unit could be faulty.

• CHECK IGNITION SWITCH

1) Touch {Vehicle Signal Info.} on the «Dealer Diag Menu» screen.
2) Make sure that “ON” lights in the IGN item and then the screen becomes dim.
ON: Normal.
OFF: Abnormal. Check the signal line connector. If there are no problems, the unit could be faulty.

• CHECK SPEED SENSOR

NOTE:
- Before starting inspections, check the safety around the vehicle.
- Lift up the vehicle as necessary.
- When the diagnostic trouble code is input in the VDC CM, perform the clear memory operation.

1) Touch {Vehicle Signal Info.} on the «Dealer Diag Menu» screen.
2) Move the vehicle 2 to 3 meters (6.6 to 9.8 ft).
3) Check that “ON” is displayed in the Speed item.
ON: Normal.
OFF: Abnormal. Check the signal line connection. If there are no problems, the unit could be faulty.

• CHECK PARKING BRAKE

Touch {Vehicle Signal Info.} on the «Dealer Diag Menu» screen.

NOTE:
Because the navigation unit does not read the parking brake signal, “OFF” is displayed constantly.

4. CHECK DVD-ROM

Insert a DVD-ROM (region code 1) into the navigation unit and play it, and the screen switches to the image from DVD.

NOTE:
Region code 1 is the code for DVD-ROM designated for United States of America and Territories of the United States, Canada, Bermuda islands. DVD-ROMs of different region code cannot be played.
Standard: DVD images are displayed.
OK: Normal.
NG: If DVD images are not displayed, check the following points. If no problems are found, the navigation unit is faulty.
- Is a DVD-ROM set in the navigation unit?
- Is the DVD-ROM set in the unit properly?
- Is a correct type of DVD (DVD-VIDEO only) used?
- Is the playing side dirty or damaged?

NOTE:
- DVD images cannot be displayed while driving or the parking brake is not applied.
- The rear entertainment system cannot play MP3 files and DVD-Audio.

5. MESSAGE LIST

Message	Cause	Action
CHECK DISC	A nonconforming or unsupported disk or a disk with no data recorded is used, or the disk cannot be read due to damage, dirt, etc.	1. Is the playing side of the disk dirty or damaged? Check whether the disk conforming to the standard is used or the disk is set properly in the unit. 2. Check whether the disk is a playable data format.
REGION CODE ERROR	DVD region code mismatch.	Use a DVD with region code 1 displayed. (United States of America and Territories of the United States, Canada, Bermuda islands = Region code 1)
PARENTAL ERROR	Cannot play due to parental level setting.	Change the parental level set in the navigation unit.
PUSH EJECT	An error (including a high temperature error) occurred in the disk playback mechanism in the navigation unit while playing a CD (CDDA, MP3 or WMA).	1. Eject the CD and then insert again. 2. Turn the ignition switch to OFF and leave the device until the temperature lowers enough. If the message still appears after the step 1. above is performed, the unit could be faulty. 3. Turn the ignition switch to ACC/ON again and start DVD. 4. If the message still appears after the above-mentioned step is performed, the unit could be faulty.
PUSH EJECT	An error occurred in the disk playback mechanism in the navigation unit while playing a DVD.	1. Eject the DVD and then insert again. 2. Turn the ignition switch to OFF and leave the device until the temperature lowers enough. If the message still appears after the step 1. above is performed, the unit could be faulty. 3. Turn the ignition switch to ACC/ON again and start DVD. 4. If the message still appears after the above-mentioned step is performed, the unit could be faulty.

C: NOTE

For operation procedures of each component of the navigation system, refer to the respective section.

- Navigation unit <Ref. to ET-33, Navigation Body.>
- GPS antenna <Ref. to ET-35, GPS Antenna.>

4. Audio

A: REMOVAL

1) Disconnect the ground cable from battery.
2) Remove the center panel assembly.

CAUTION:
Do not put your finger on the fin of the air vent grille. Doing so may damage the fin.

(1) Attach the protective tape (a) to the meter visor.

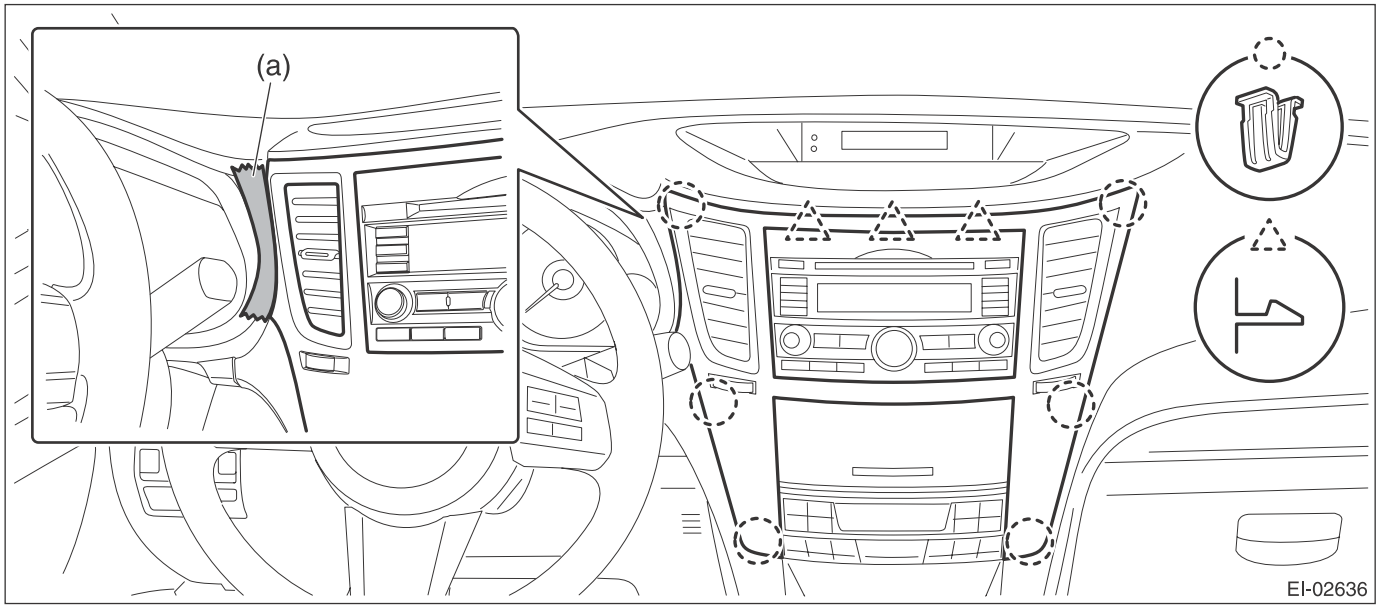

(2) Insert a finger into the air vent grille and release the left and right clips at the top of the center panel. (A), (B)
(3) Insert a finger into the air vent grille and release the left and right clips at the center of the center panel. (C), (D)

(4) Release the clips at the bottom of the center panel and remove the center panel assembly.

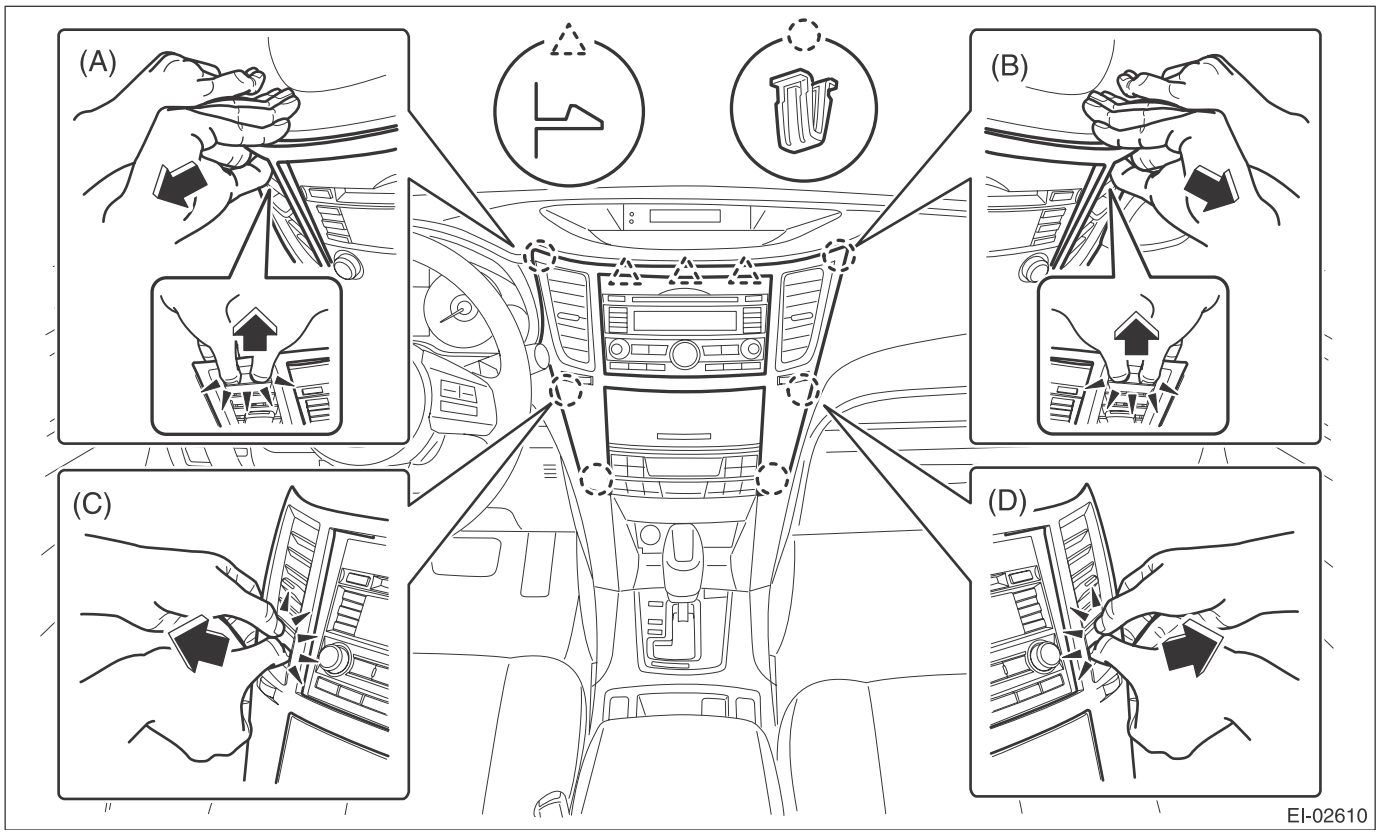

3) Remove the audio assembly.
(1) Remove the left and right screws, and partially pull the audio out from center console.
(2) Disconnect the connectors, and remove the audio assembly.

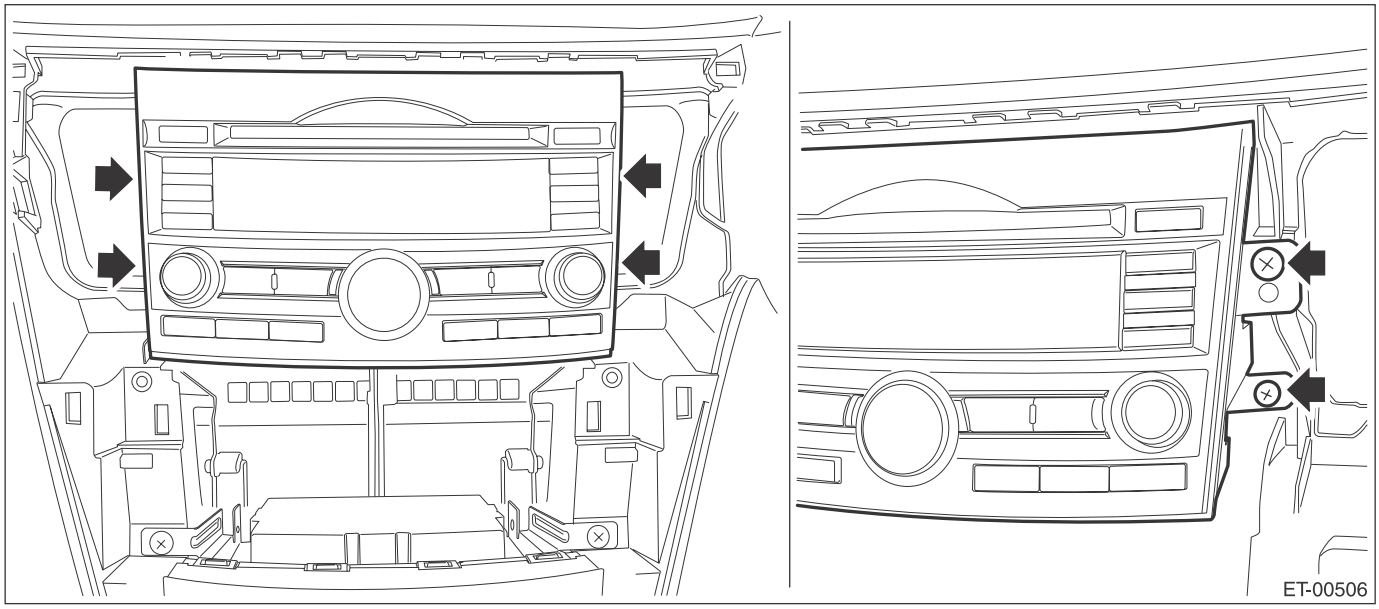

B: INSTALLATION

Install each part in the reverse order of removal.

5. Front Speaker

A: REMOVAL

1. FRONT SIDE SPEAKER

NOTE:
harman/kardon® audio system only.
1) Disconnect the ground cable from battery.
2) Remove the front side speaker.
(1) Release the clips and claws, then detach the speaker cover.

CAUTION:
Use a plastic clip remover for removal.
(2) Remove the screws.

Preparation tool: Stubby screwdriver
(3) Disconnect the connector and remove the front side speaker assembly.

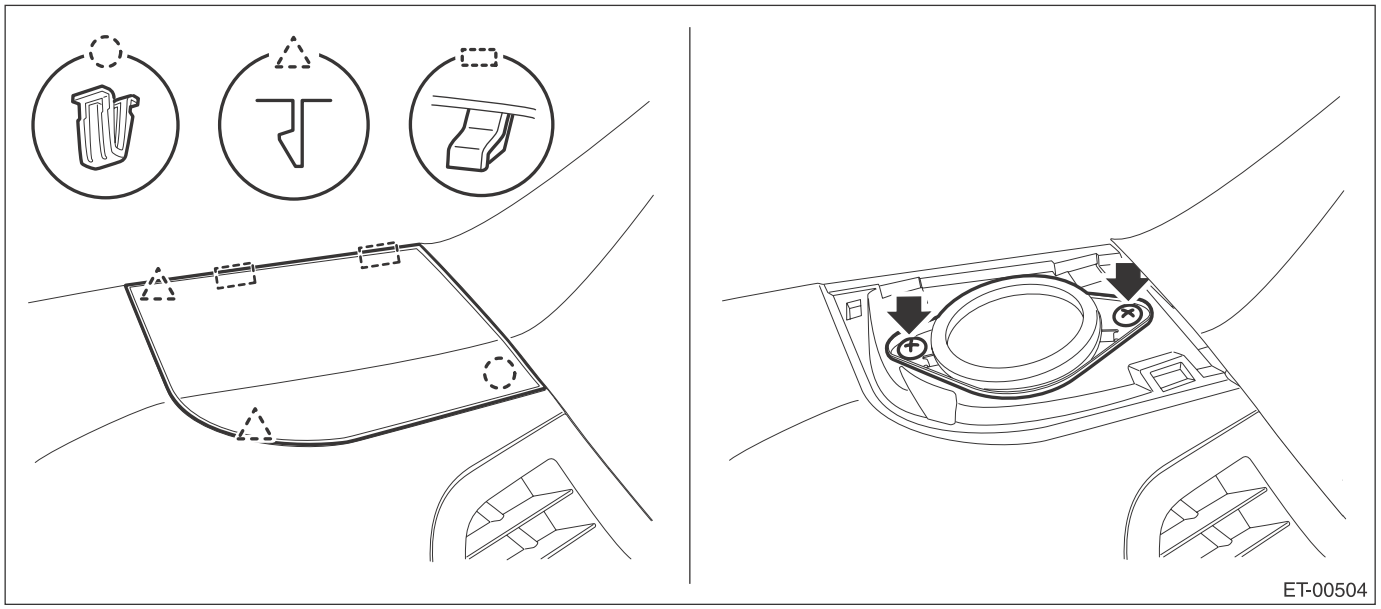

NOTE:
On the passenger's side, also disconnect the sunload sensor connector.

2. FRONT DOOR SPEAKER

1) Disconnect the ground cable from battery.
2) Remove the gusset cover.
   (1) Attach the protective tape (a) to the door trim.
   (2) Release the clips and claws, then detach the gusset cover.

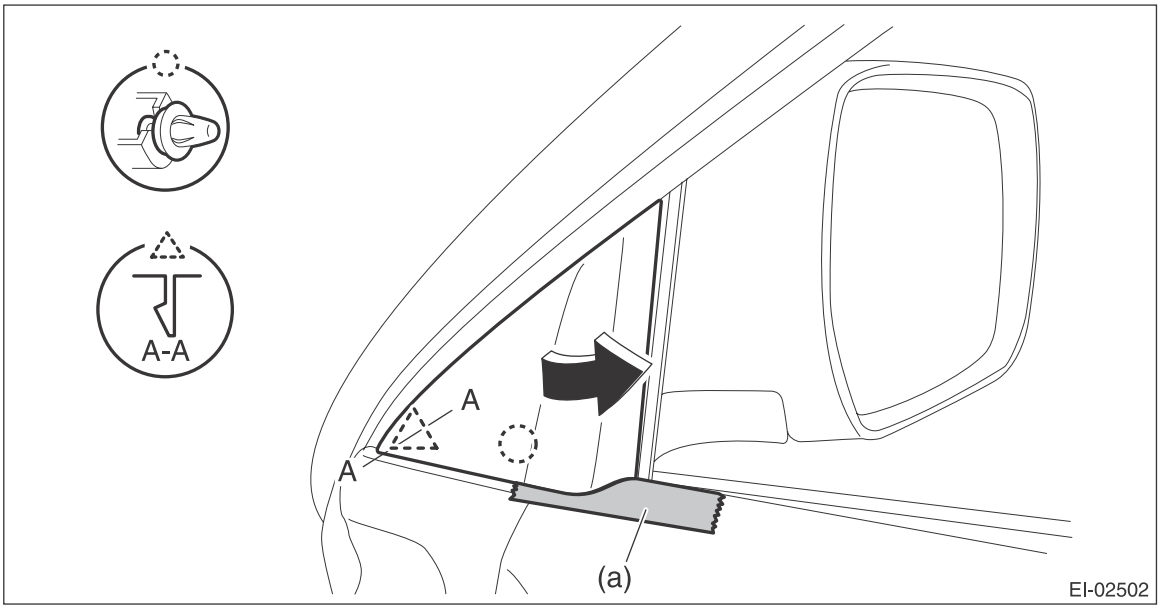

3) Remove the door trim assembly.
   (1) Open the cover and remove the screw.
   (2) Remove the clips in the order of (A) to (J) and remove the door trim assembly from the door panel.

CAUTION:
When removing the door trim, be sure to remove the clips in the correct order. Forcibly removing clips may damage the door panel assembly.

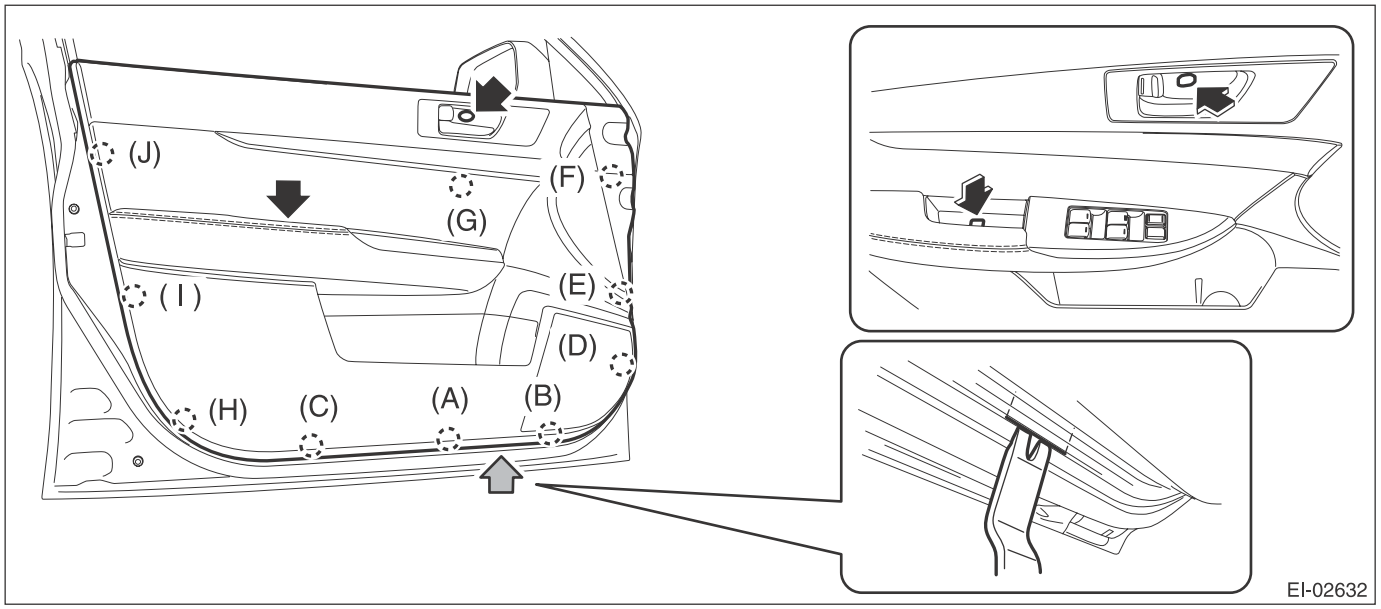

NOTE:
Insert a plastic clip remover into the slit at the bottom edge of the door trim and lift the door trim.

(3) Remove the cables (a) and (b) from the cable holder of inner remote.

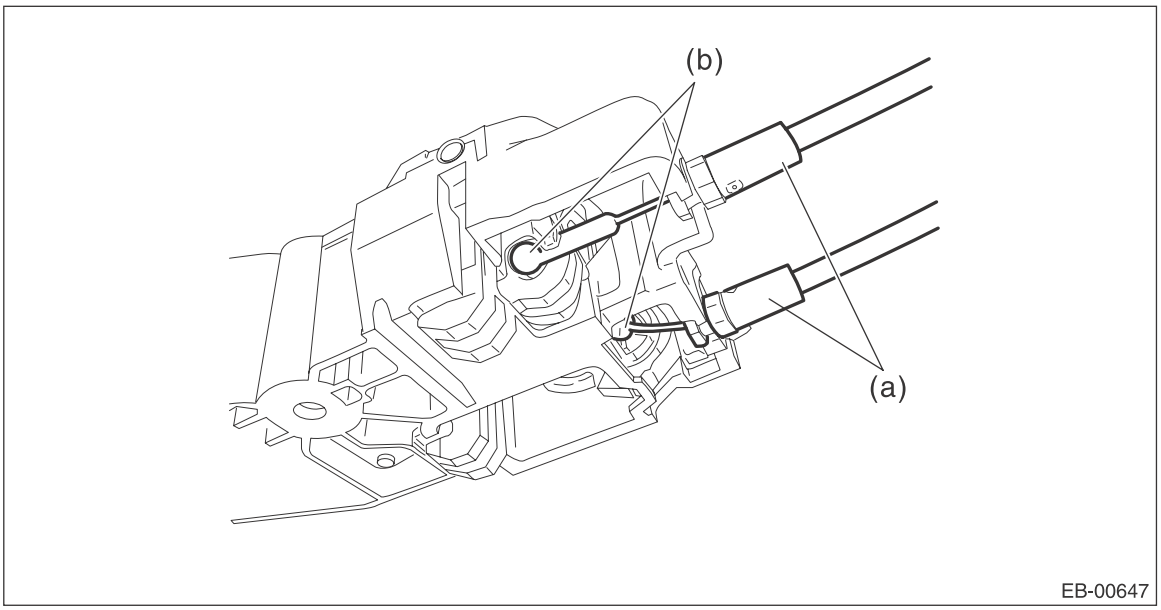

(4) Disconnect the harness connector and remove the door trim assembly.

4) Remove the front door speaker assembly.

(1) Remove the screws.

(2) Disconnect the harness connector and remove the front door speaker assembly.

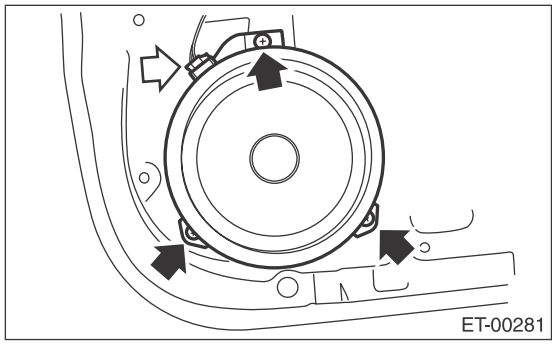

B: INSTALLATION

Install each part in the reverse order of removal.

6. Rear Speaker

A: REMOVAL

1) Disconnect the ground cable from battery.
2) Remove the door trim assembly.
   (1) Open the cover and remove the screw.
   (2) Remove the clips in the order of (A) to (H) and remove the door trim assembly from the door panel.

CAUTION:
When removing the door trim, be sure to remove the clips in the correct order. Forcibly removing clips may damage the door panel assembly.

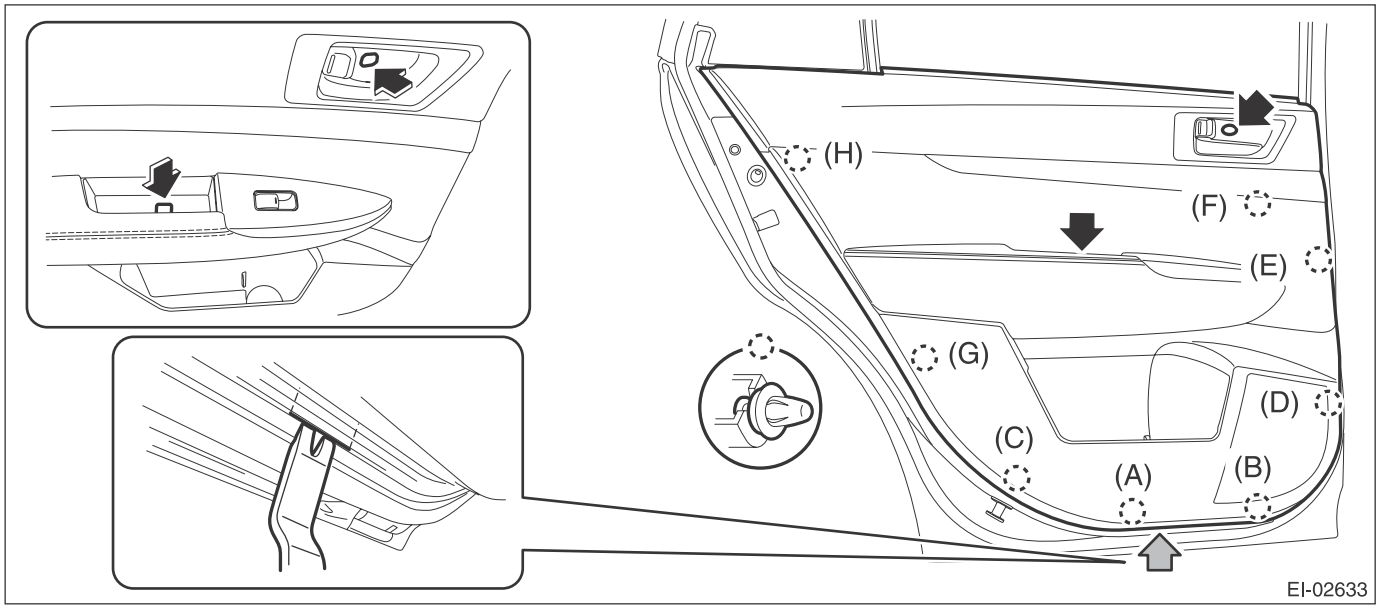

NOTE:
Insert a plastic clip remover into the slit at the bottom edge of the door trim and lift the door trim.
   (3) Remove the cables (a) and (b) from the cable holder of inner remote.

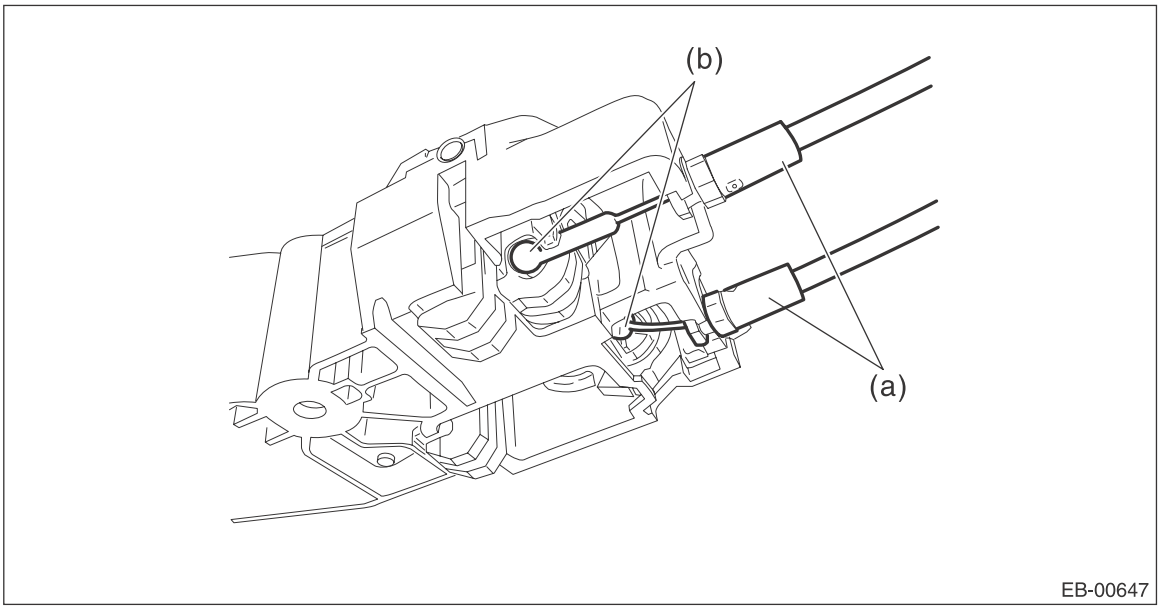

   (4) Disconnect the harness connector and remove the door trim.
3) Remove the rear speaker assembly.
   (1) Remove the screws.

(2) Disconnect the harness connector and remove the rear speaker assembly.

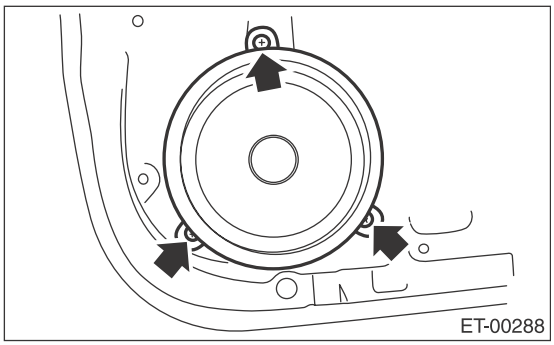

B: INSTALLATION

Install each part in the reverse order of removal.

7. Woofer

A: REMOVAL

1. SEDAN MODEL

NOTE:
harman/kardon® audio system only.
1) Disconnect the ground cable from battery.
2) Remove the rear shelf trim. <Ref. to EI-120, REMOVAL, Rear Shelf Trim.>
3) Remove the woofer.
    (1) Remove the screws.
    (2) Disconnect the harness connector and remove the woofer assembly.

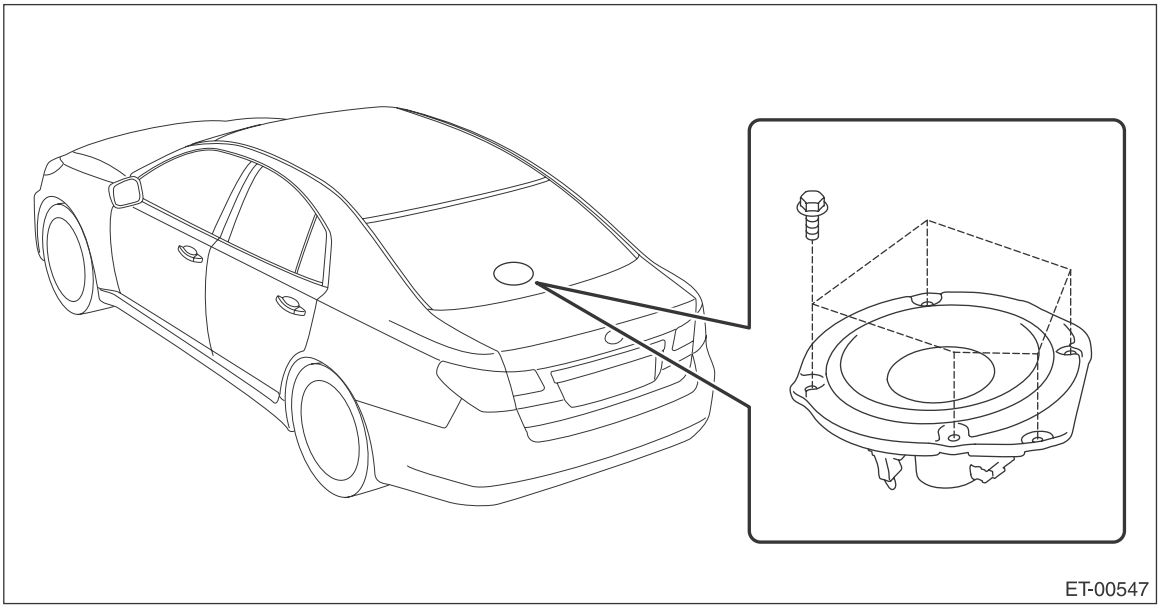

2. OUTBACK MODEL

NOTE:
harman/kardon® audio system only.
1) Disconnect the ground cable from battery.
2) Remove the rear quarter trim LWR. <Ref. to EI-114, OUTBACK MODEL, REMOVAL, Rear Quarter Trim.>
3) Remove the woofer.
   (1) Remove the woofer bracket mounting clips and screws, then remove the woofer bracket.
   (2) Disconnect the harness connector and remove the woofer assembly.

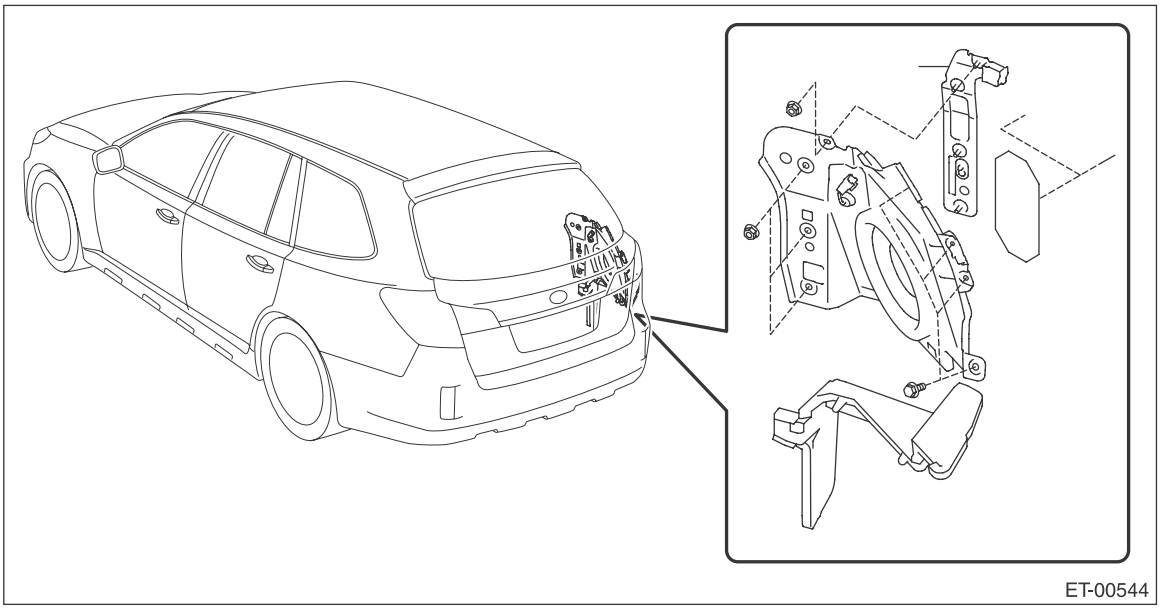

B: INSTALLATION

Install each part in the reverse order of removal.

Tightening torque:
7.5 N·m (0.76 kgf-m, 5.5 ft-lb)

8. Power Amplifier

A: REMOVAL

NOTE:
harman/kardon® audio system only.
1) Disconnect the ground cable from battery.

NOTE:
For the power seat, move the seat before removing the battery ground terminal.
2) Move the passenger's seat to the front-most position.
3) Remove the power amplifier.
   (1) Disconnect the harness connector.
   (2) Remove the nut and remove the power amplifier.

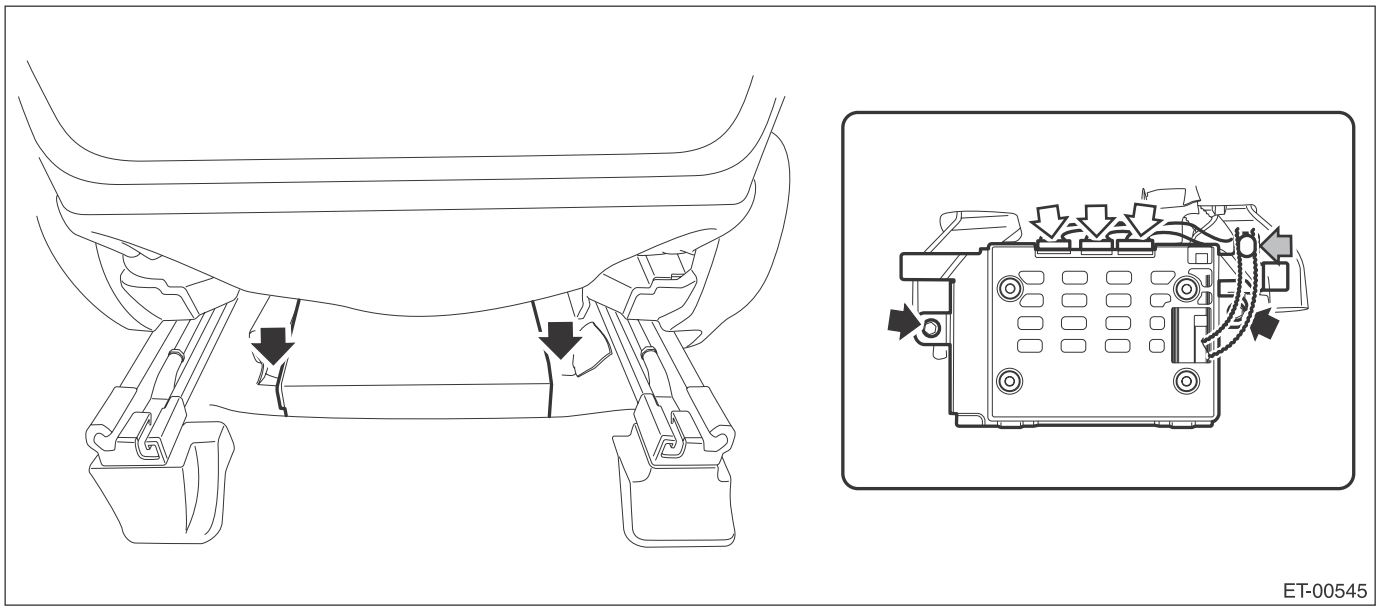

B: INSTALLATION

Install each part in the reverse order of removal.

Tightening torque:
4.5 N·m (0.46 kgf-m, 3.32 ft-lb)

9. Antenna

A: REMOVAL

1. RADIO ANTENNA AMPLIFIER

• Sedan model

1) Remove the rear quarter trim LH. <Ref. to EI-109, SEDAN MODEL, REMOVAL, Rear Quarter Trim.>
2) Remove the radio antenna amplifier assembly.
   (1) Disconnect the connector.
   (2) Remove the bolts, and then remove the radio antenna amplifier assembly.

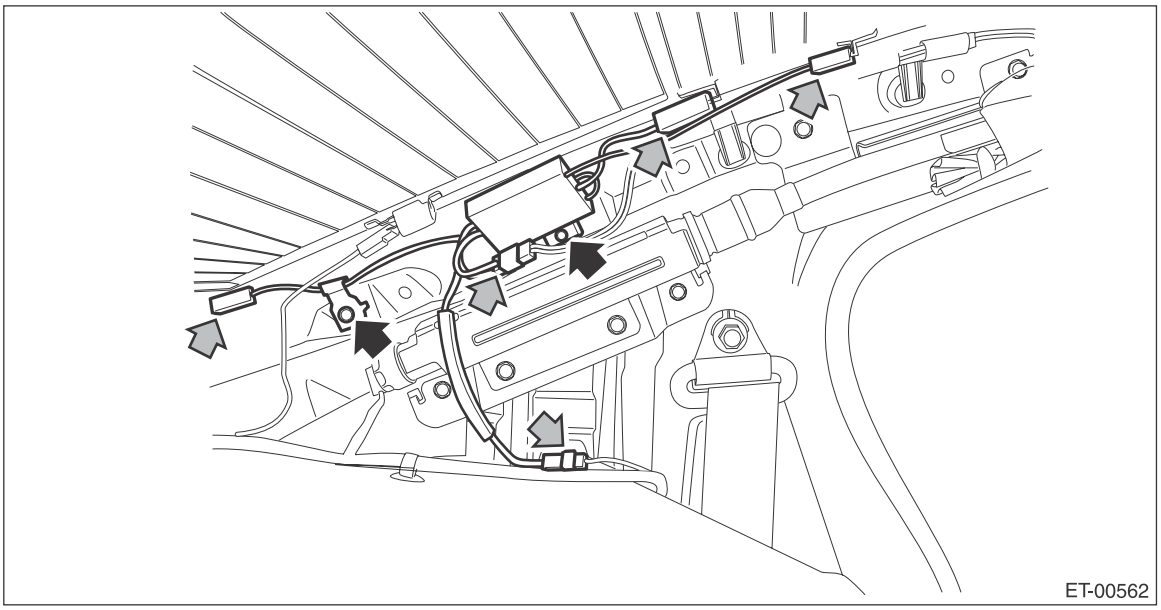

• OUTBACK model

1) Remove the rear gate upper trim.
   (1) Remove the claws on the trim edge.
   (2) Disconnect the claws in the center of trim, and remove the rear gate upper trim.

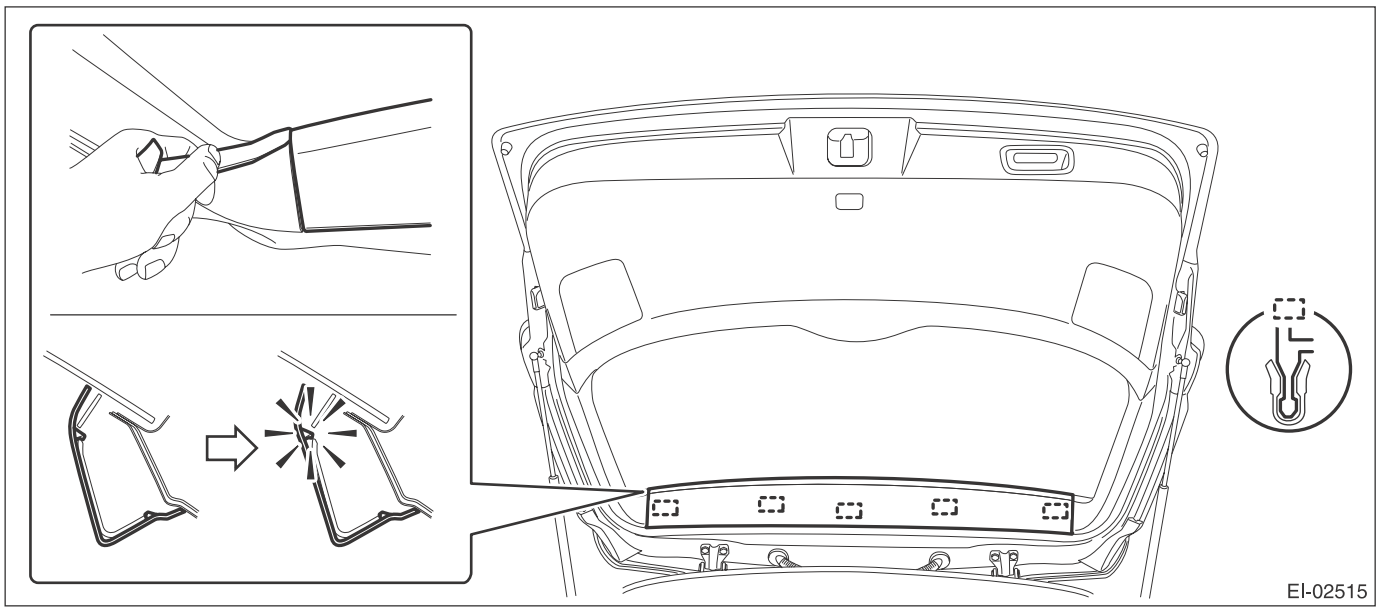

2) Remove the radio antenna amplifier assembly.
   (1) Disconnect the connector.

(2) Remove the bolts, and then remove the radio antenna amplifier assembly.

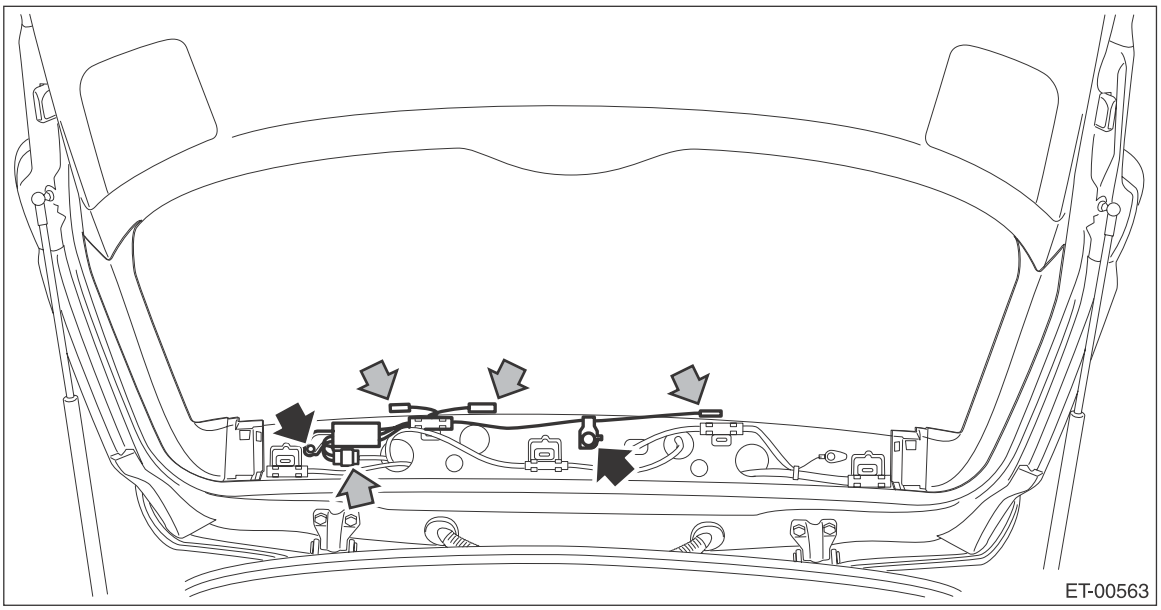

B: INSTALLATION

Install each part in the reverse order of removal.

Tightening torque:
12 N·m (1.22 kgf-m, 8.9 ft-lb)

C: INSPECTION

CAUTION:
When wiping dirt off of the glass to avoid heat wire damage, be careful of the following.
- **Use a dry and soft cloth.**
- **Move the cloth along the heat wire.**

Inspection method of antenna, it is different from printing pattern of antenna.

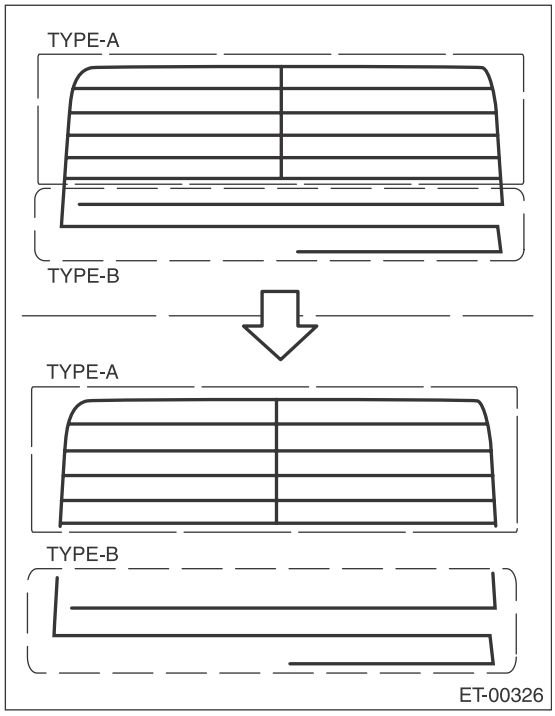

TYPE-A Printing pattern of grid
TYPE-B Printing pattern of straight

1. TYPE A

1) Disconnect the ground cable from battery.
2) Remove the trim.
Sedan model: Remove the rear quarter trim rear on both sides. <Ref. to EI-109, SEDAN MODEL, REMOVAL, Rear Quarter Trim.>
OUTBACK model: Remove the rear gate trim. <Ref. to EI-160, REMOVAL, Rear Gate Trim.>
3) Disconnect the antenna harness connector and antenna terminals.

4) Prepare the extension harness (A), (B).

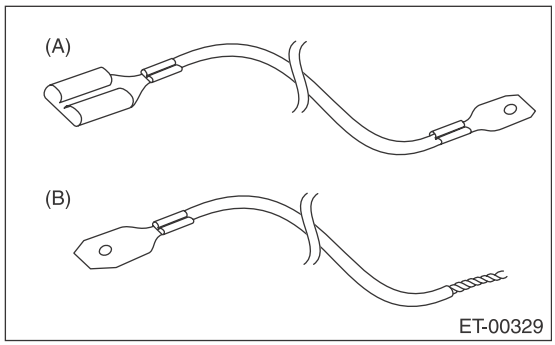

(A) Attach the flat terminals (male and female) to both ends of the harness of 2,000 mm (78.7 in) length (electrical wire unit dimensions approx. 2.0 mm^2 (0.0032 sq in)).
(B) Attach the flat terminal (female) to one side of the harness, another side to twist the harness of 2,000 mm (78.7 in) length (electrical wire unit dimensions approx. 2.0 mm^2 (0.0032 sq in)).

5) Connect the extension harness (A) to rear defogger harness (power supply side) terminal and antenna terminal.

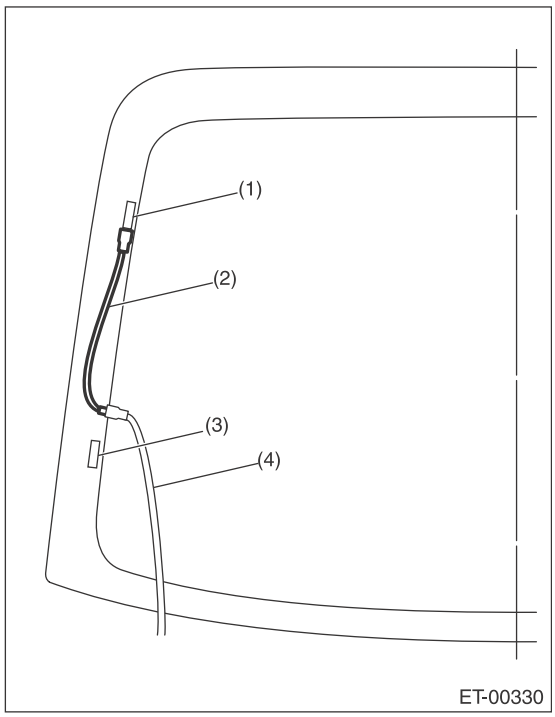

(1) Antenna terminal
(2) Extension harness (A)
(3) Rear defogger terminal
(4) Rear defogger harness (power supply side - red blue)

6) Connect the extension harness (B) to rear defogger harness (ground side) terminal.

7) Fasten the another side of extension harness (B) to end of antenna pattern of grid with tape.

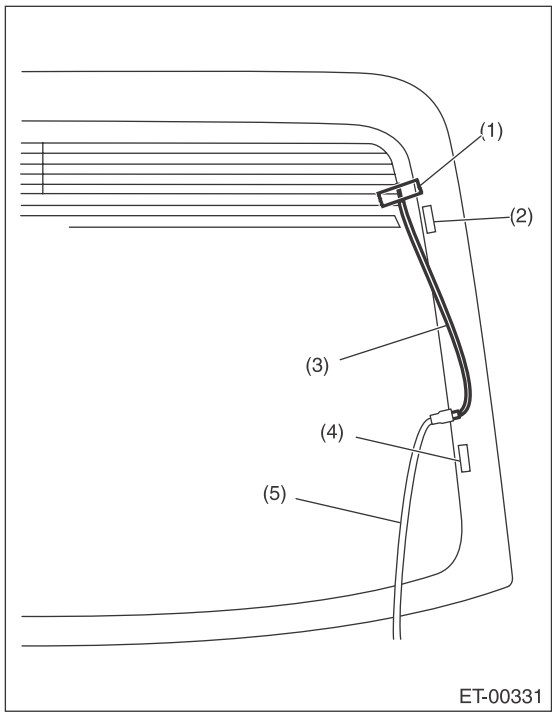

(1) Tape
(2) Antenna terminal
(3) Extension harness (B)
(4) Rear defogger terminal
(5) Rear defogger harness (ground side - black)

8) Connect the ground cable to battery.
9) Turn the ignition switch to ON.
10) Turn the rear defogger switch to ON.
11) Wrap a piece of aluminum foil around the tip of tester probe and press foil against antenna wire with your finger.

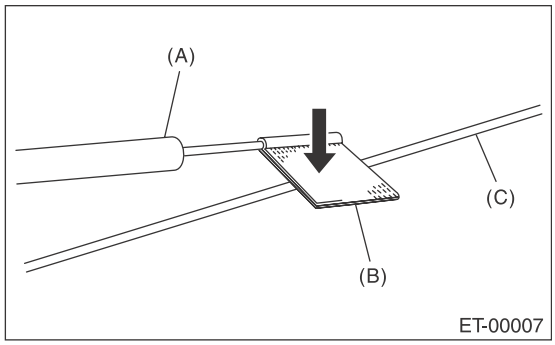

(A) Tester probe
(B) Aluminum foil
(C) Antenna wire

12) Measure the voltage around an antenna wire (a) and (b).

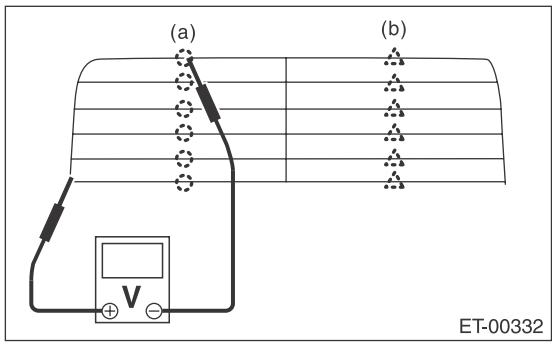

	Measured voltage value	Criteria
(a)	Approx. 3 V (standard value)	Normal
	Approx. 6 V or 0 V	Open
(b)	Approx. 9 V (standard value)	Normal
	Approx. 12 V or 6 V	Open

NOTE:
Measuring point (a)
• If the measured value is 6 V, heat wire is open between antenna wire center and positive (+) terminal of probe.
• If it is 0 V, the circuit is open between antenna wire center and ground.
Measuring point (b)
• If the measured value is 12 V, heat wire is open between antenna wire center and positive (+) terminal of probe.
• If it is 6 V, the circuit is open between antenna wire center and ground.

13) Fasten the voltmeter positive (+) side and negative (–) side to end of open harness positive side of step 12).

14) Search a point the voltage changes from 0 V, and move the negative (–) probe along antenna wire slowly.

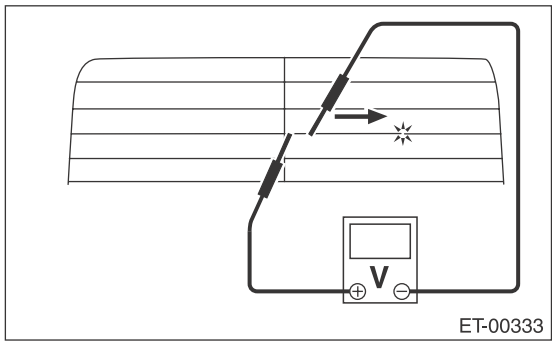

15) Repair the antenna wire if the place of the open circuit is identified. <Ref. to ET-25, REPAIR, Antenna.>

2. TYPE B

Measure the resistance between the antenna terminal and each antenna wire.

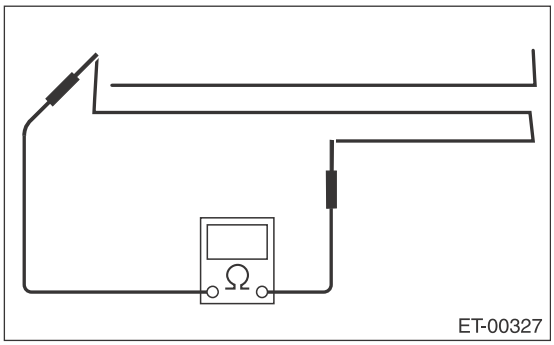

1) Disconnect the ground cable from battery.
2) Wrap a piece of aluminum foil around the tip of probe and press foil against antenna wire with your finger.

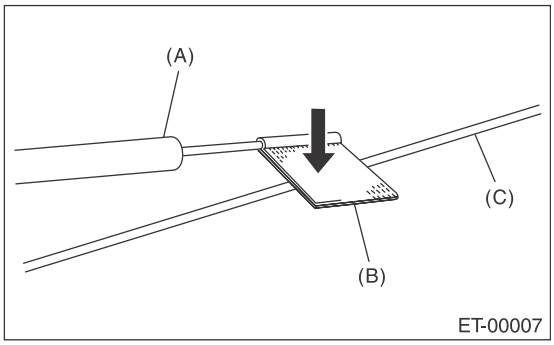

(A) Tester probe
(B) Aluminum foil
(C) Antenna wire

3) To locate the broken point, move the probe along antenna wire.

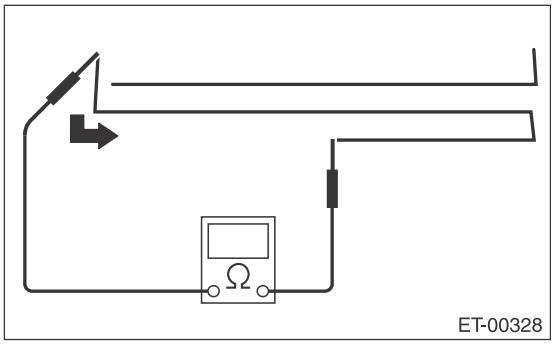

NOTE:
If an antenna wire is OK, resistance will be less than 20 Ω.
If an antenna wire is broken, resistance will be more than 1 MΩ.
4) Repair the antenna wire if the place of the open circuit is identified. <Ref. to ET-25, REPAIR, Antenna.>

D: REPAIR

1) Clean the external circumference of antenna wire and around with alcohol or white gasoline.
2) Paste a thin masking film on the glass along broken wire.
3) Apply the conductive silver composition (DUPONT No. 4817) on the broken portion with a drawing pen.

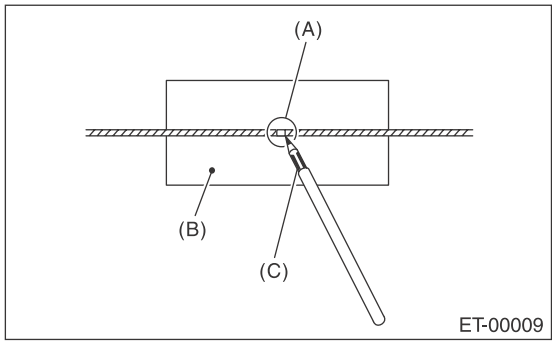

(A) Broken portion
(B) Masking film
(C) Conductive silver composition

4) Dry out the deposited portion.
5) After repair has been completed, measure the resistance in repaired wire.

10.Noise Suppressor

A: REMOVAL

1. SEDAN MODEL

1) Disconnect the ground cable from battery.
2) Remove the rear shelf trim. <Ref. to EI-120, REMOVAL, Rear Shelf Trim.>
3) Remove the noise suppressor.
   (1) Disconnect harness connector from noise suppressor.
   (2) Remove the harness clamps and bolts and detach the noise suppressor.

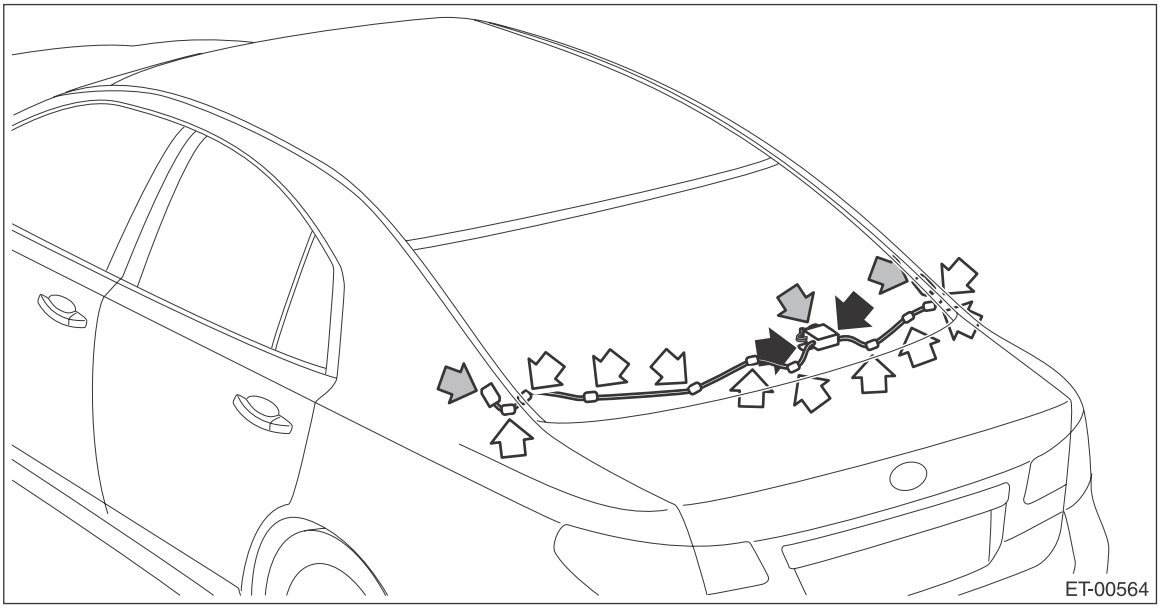

2. OUTBACK MODEL

1) Disconnect the ground cable from battery.
2) Remove the rear gate trim. <Ref. to EI-160, REMOVAL, Rear Gate Trim.>
3) Remove the noise suppressor.
   (1) Disconnect harness connector from noise suppressor.
   (2) Remove the harness clamps and bolts and detach the noise suppressor.

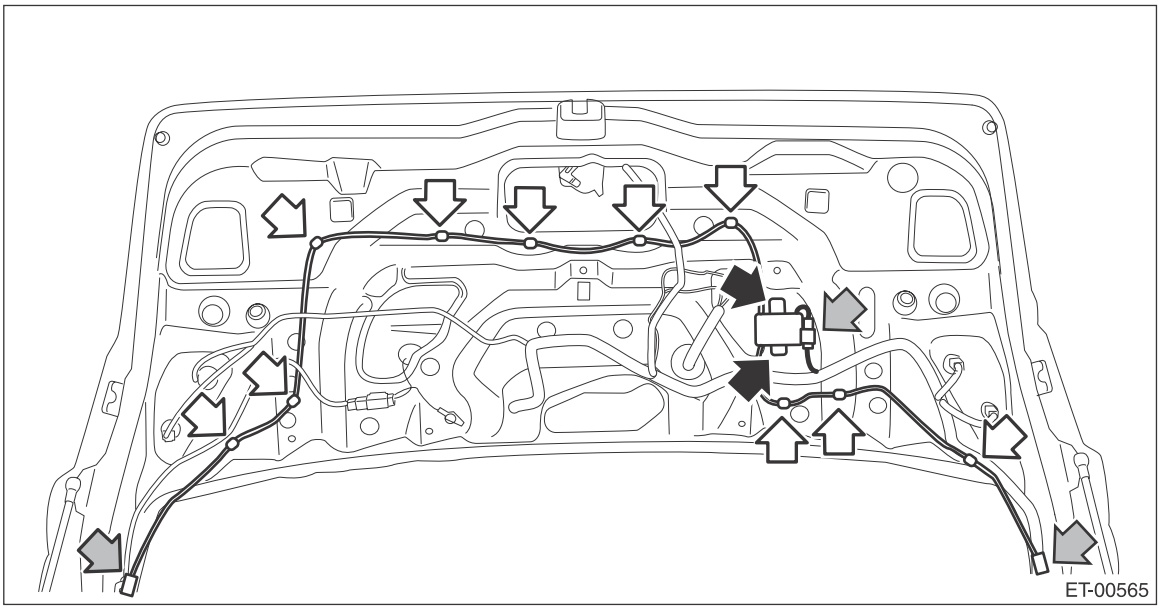

B: INSTALLATION

Install each part in the reverse order of removal.

Tightening torque:
Noise suppressor: 12 N·m (1.22 kgf-m, 8.9 ft-lb)

11.Steering Satellite Switch

A: REMOVAL

CAUTION:
Refer to "CAUTION" of "General Description" before handling the airbag module. <Ref. to AB-9, CAUTION, General Description.>

1) Position the front wheels straight ahead. (After moving a vehicle 5 m (16 ft) or more with front wheels positioned straight ahead, make sure that the vehicle moves straight ahead.)
2) Turn the ignition switch to OFF.
3) Disconnect the ground cable from battery and wait for at least 60 seconds before starting work.
4) Remove the driver's airbag module assembly.

Preparation tool: TORX® T30

(1) Loosen the TORX® bolts located on the sides of the steering wheel.

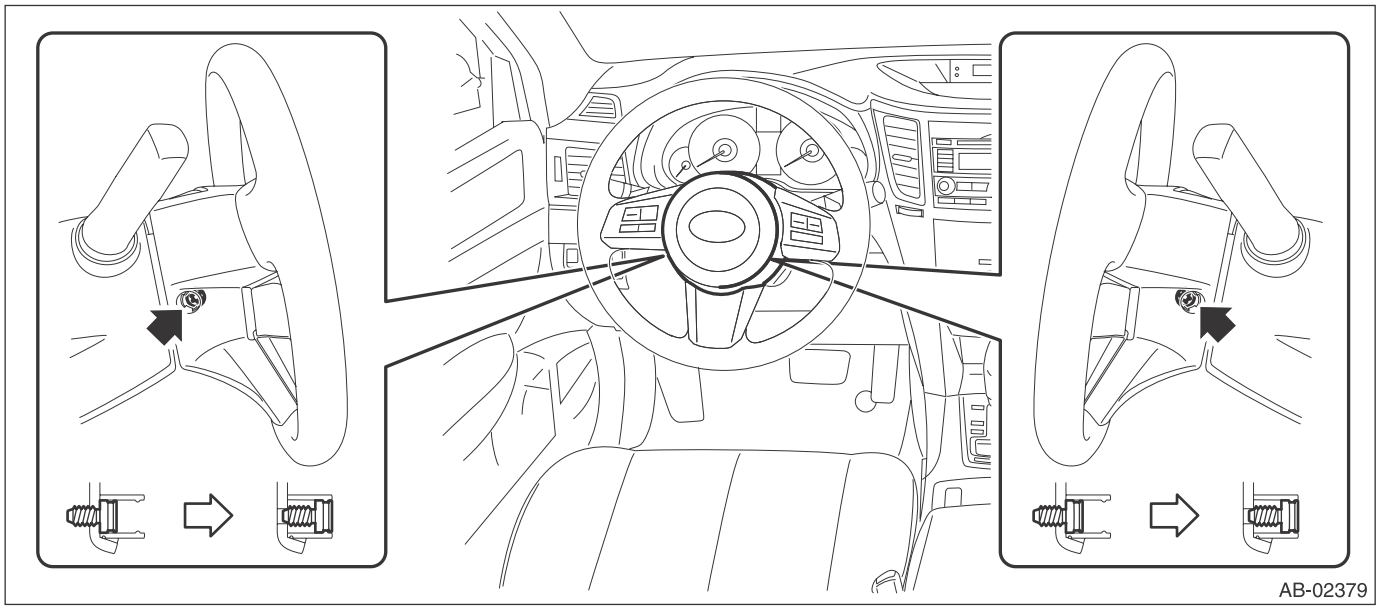

(2) Disconnect the airbag connector and remove the airbag module assembly. <Ref. to AB-18, PROCEDURE, Airbag Connector.>
(3) Disconnect the horn harness.

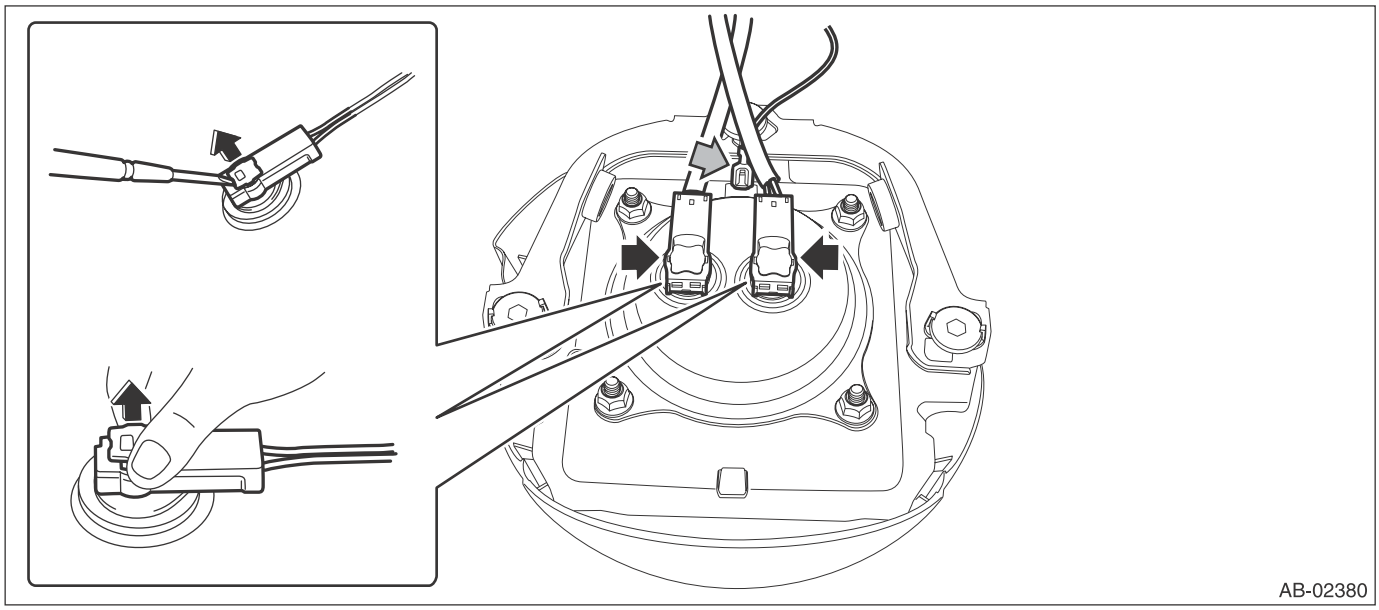

5) Remove the steering wheel.

CAUTION:
- **Always use the steering wheel puller for removal to avoid deforming the steering wheel.**
- **If the steering wheel has been removed, make sure that the roll connector is not turned from the original position.**

(1) Disconnect the connector and remove the nut.
(2) Put alignment marks and remove the steering wheel.

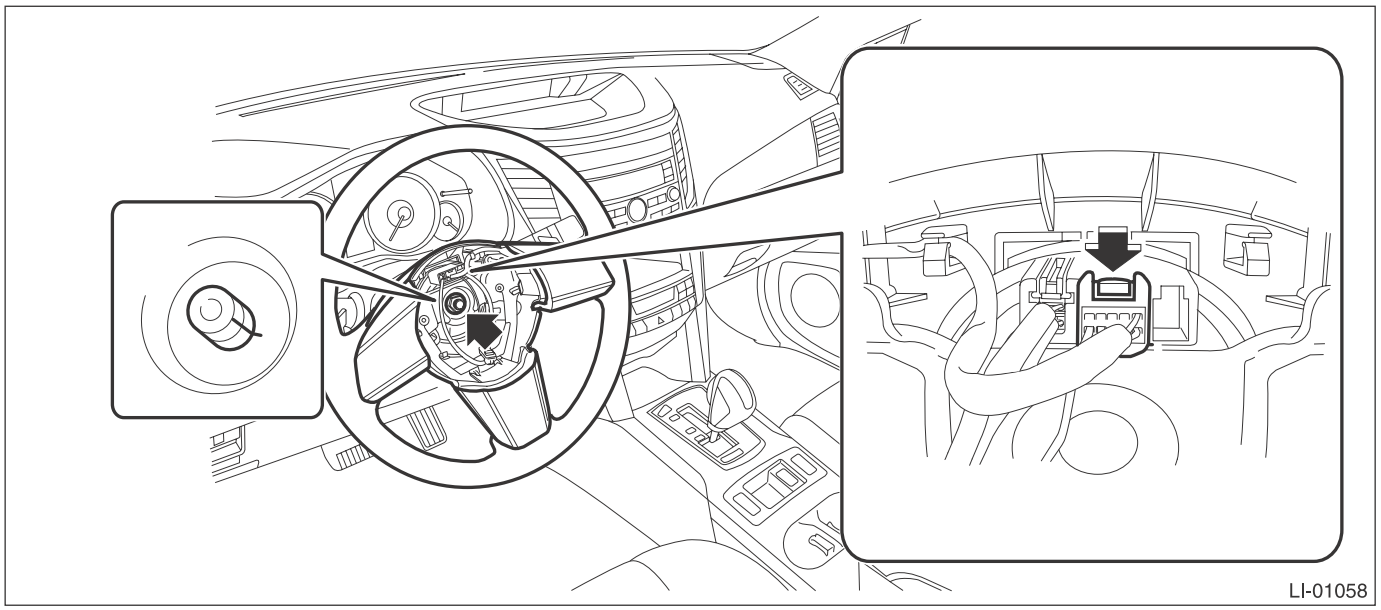

6) Remove the satellite switch.
(1) Remove the screw, disconnect the connector and remove the paddle shift switch. (Model with paddle shift)

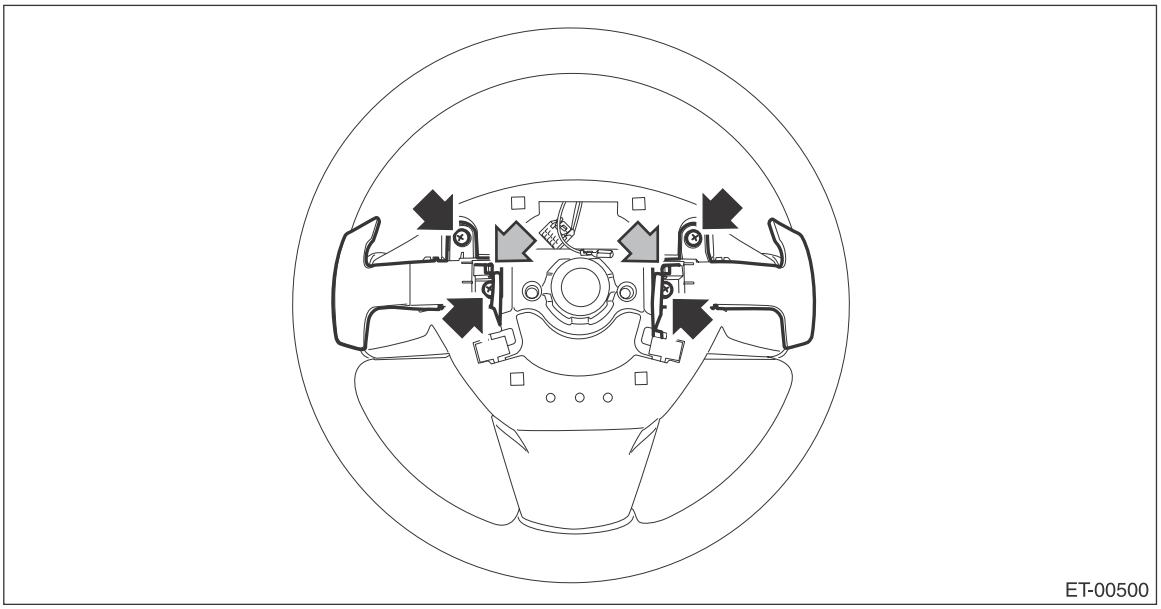

(2) Disconnect the claws and then remove the lower cover.

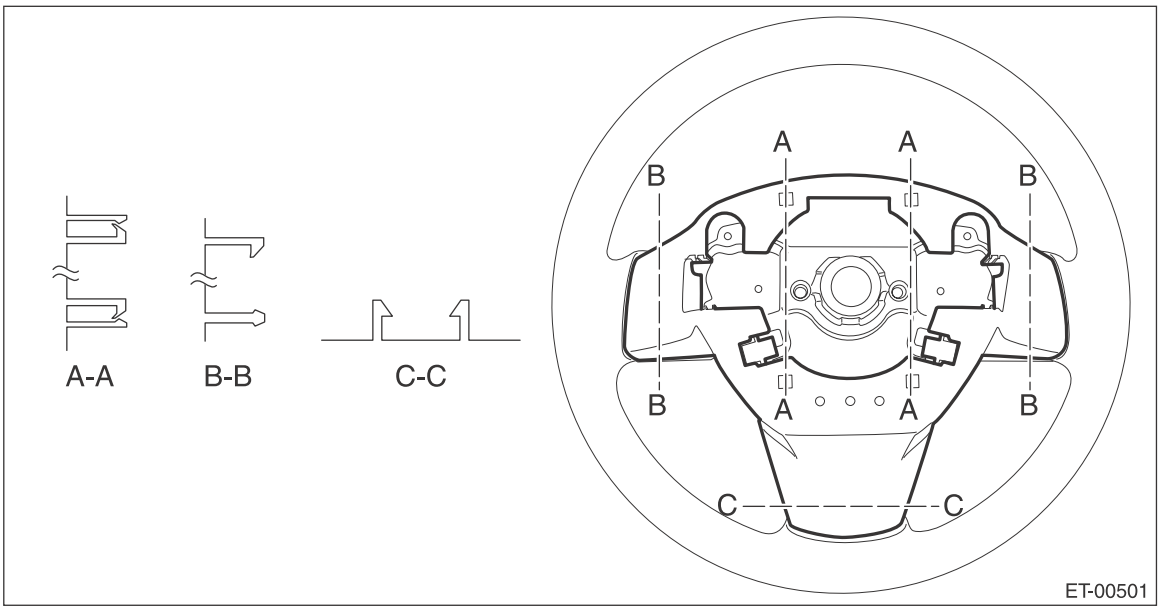

(3) Remove the screws and then remove the satellite switch assembly.

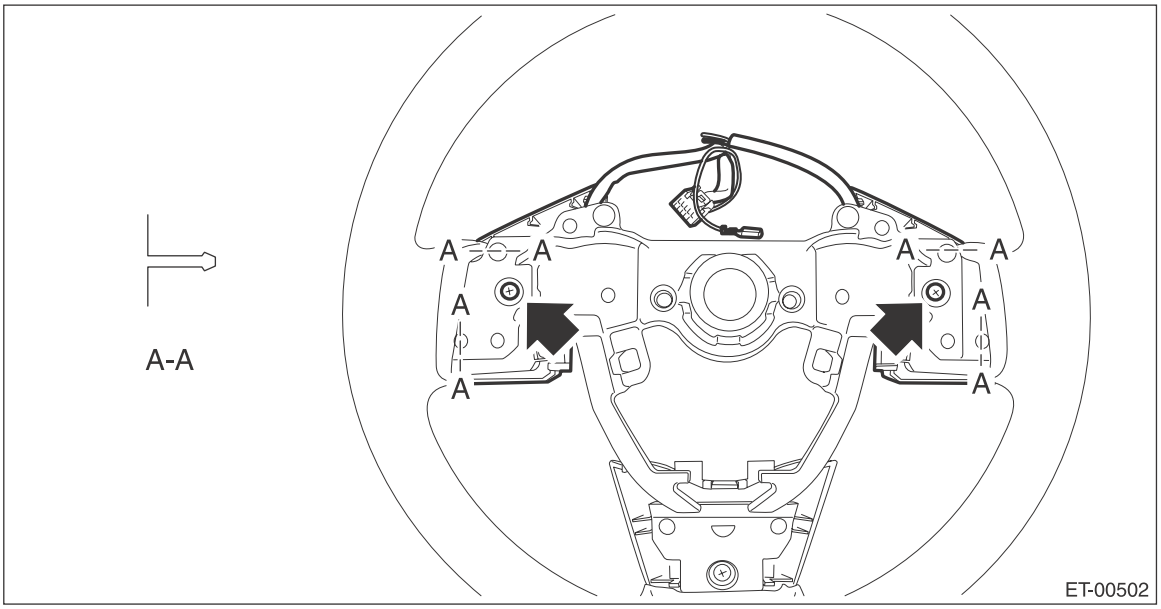

B: INSTALLATION

Install each part in the reverse order of removal.

Tightening torque:

Airbag module: 10 N·m (1.0 kgf-m, 7.4 ft-lb)
Steering wheel: 39 N·m (4.0 kgf-m, 28.8 ft-lb)
Clearance between column cover and steering wheel: 2 — 4 mm (0.08 — 0.16 in)

C: INSPECTION

1) Measure the resistance between satellite switch connector terminals.

- Audio operation

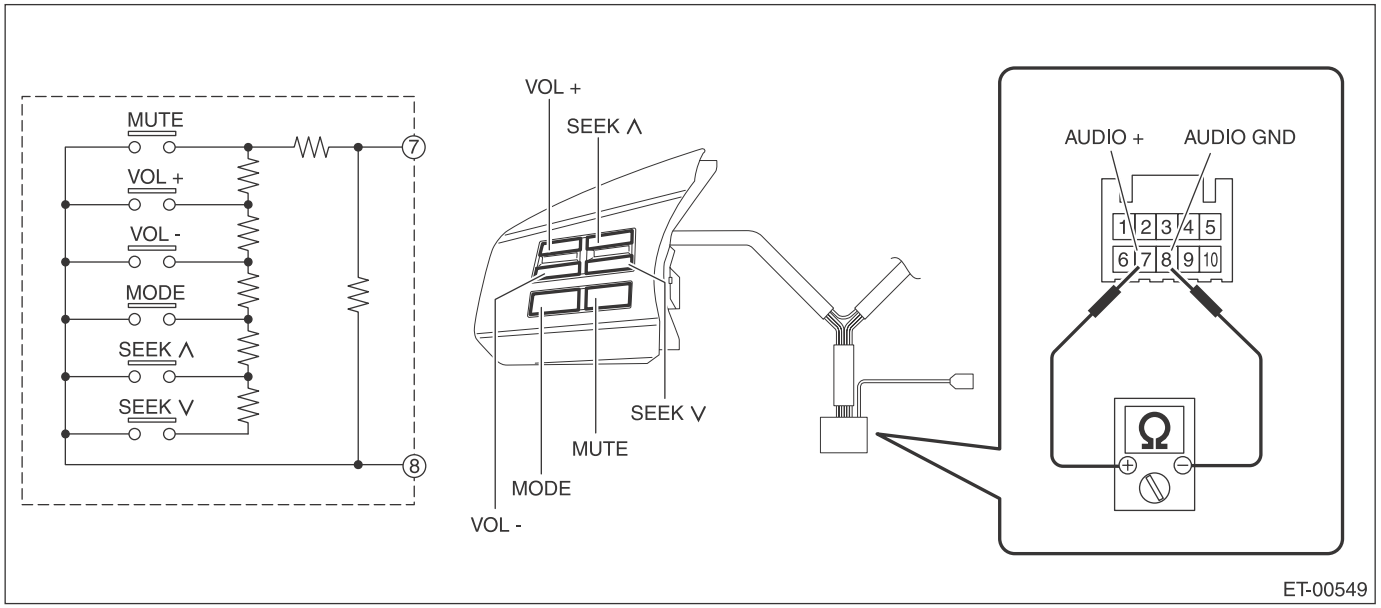

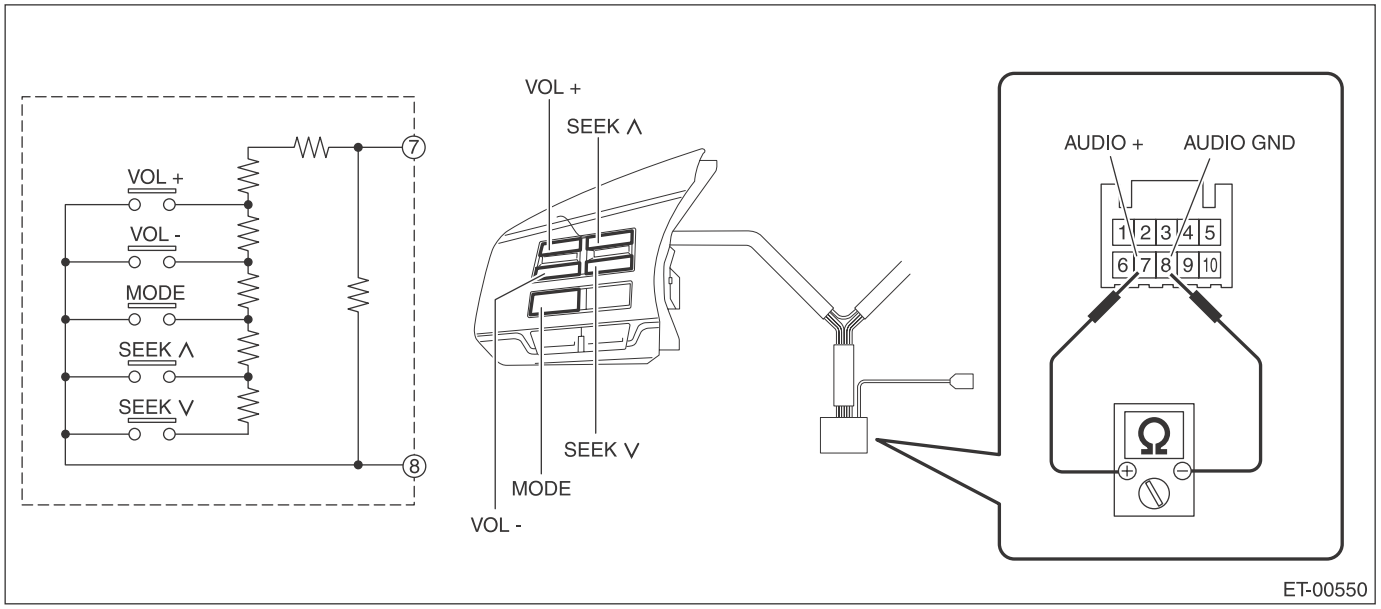

Switch	Switch operation	Terminal No.	Standard
Mute Volume (+) Volume (–) Mode Seek (/\) Seek (\/)	All OFF	7 and 8	Approx. 4.7 kΩ
Mute	ON	7 and 8	Approx. 22 Ω
Volume (+)	ON	7 and 8	Approx. 90 Ω
Volume (–)	ON	7 and 8	Approx. 200 Ω
Mode	ON	7 and 8	Approx. 360 Ω
Preset CH UP/Seek (/\)	ON	7 and 8	Approx. 690 Ω
Preset CH DOWN/Seek (\/)	ON	7 and 8	Approx. 1.5 kΩ

- Handsfree operation (Models with handsfree feature)

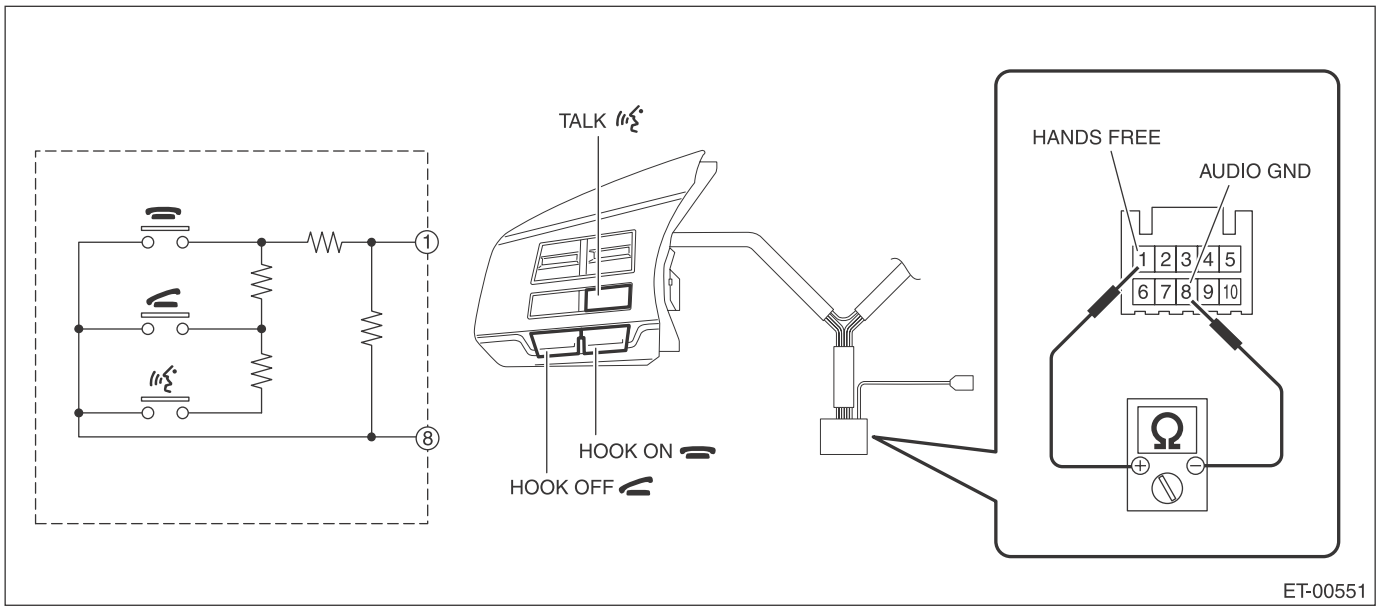

Switch	Switch operation	Terminal No.	Standard
HOOK ON HOOK OFF TALK	All OFF	1 and 8	Approx. 100 kΩ
HOOK ON	ON	1 and 8	Approx. 330 Ω
HOOK OFF	ON	1 and 8	Approx. 1 kΩ
TALK	ON	1 and 8	Approx. 3.2 kΩ

2) Replace the satellite switch if the measurement result is not within the standard value.

12.Navigation Body

A: REMOVAL

CAUTION:
• When replacing the navigation unit, be sure to replace with specified navigation unit. The marker adjustment can not be performed correctly if replacing with unspecified navigation unit.
• After replacing the navigation unit, be sure to check that the rearview camera images and the marker line are displayed.

1) Disconnect the ground cable from battery.
2) Remove the center panel assembly.

CAUTION:
Do not put your finger on the fin of the air vent grille. Doing so may damage the fin.

(1) Attach the protective tape (a) to the meter visor.

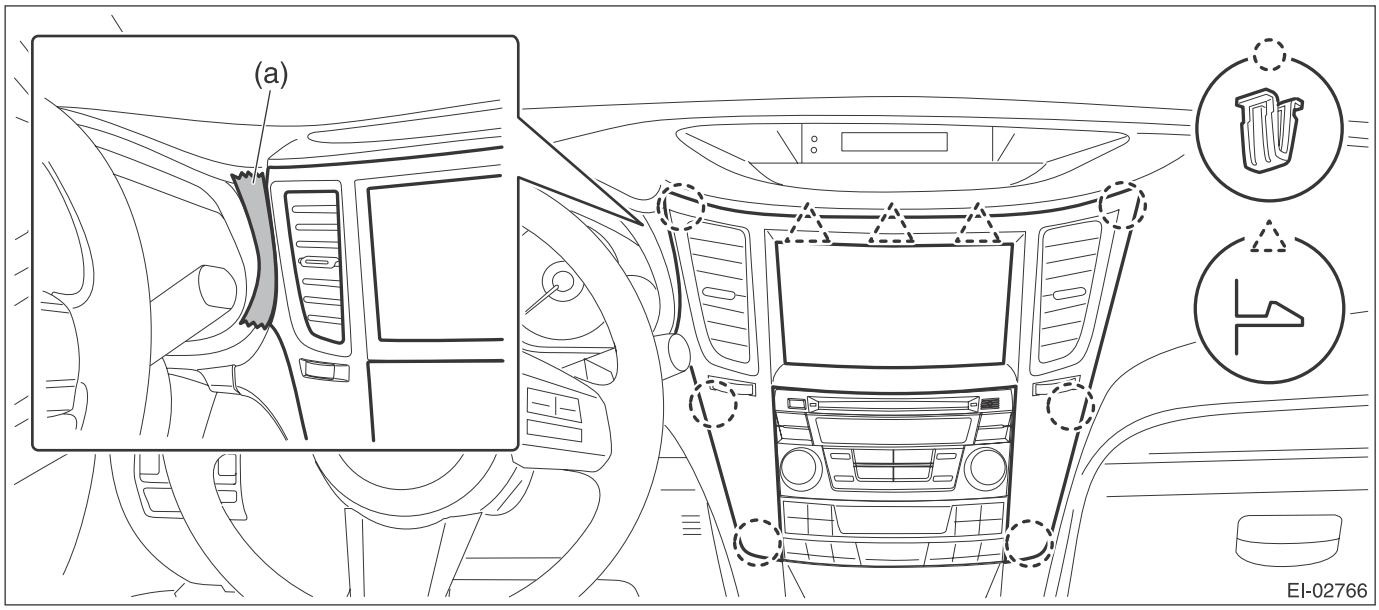

(2) Insert a finger into the air vent grille and release the left and right clips at the top of the center panel. (A), (B)
(3) Insert a finger into the air vent grille and release the left and right clips at the center of the center panel. (C), (D)

(4) Release the clips at the bottom of the center panel and remove the center panel assembly.

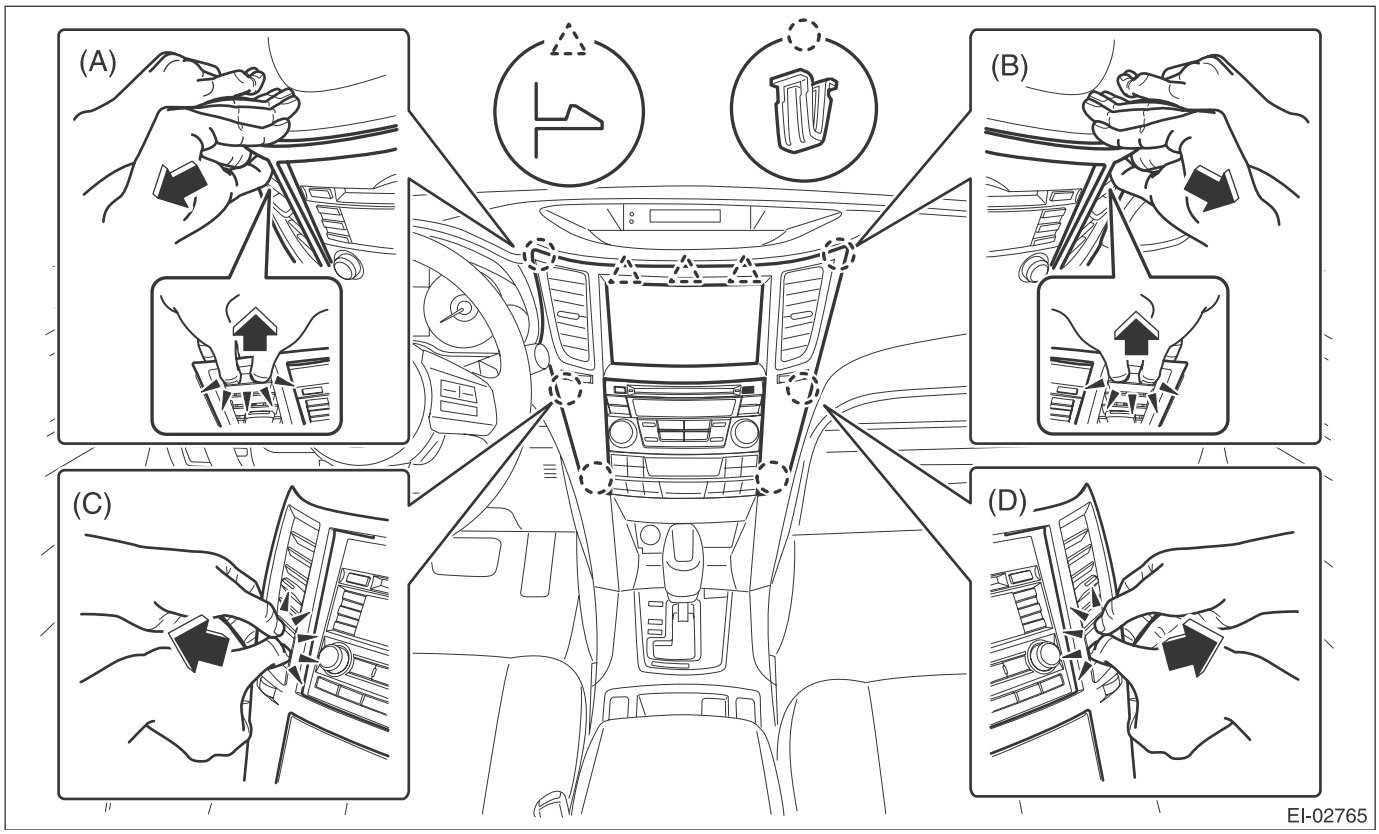

3) Remove the navigation assembly.
(1) Remove the left and right screws.
(2) Disconnect the connector and remove the navigation assembly.

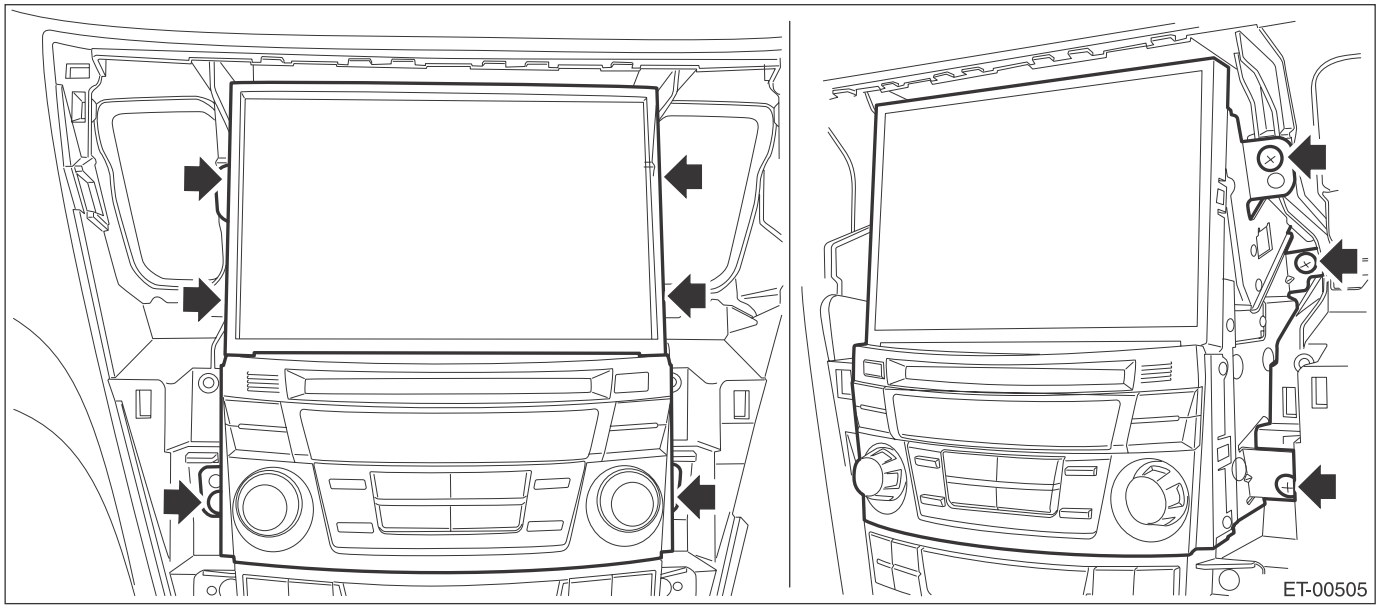

13.GPS Antenna

A: REMOVAL

1) Disconnect the ground cable from battery.
2) Remove the center panel assembly.

CAUTION:
Do not put your finger on the fin of the air vent grille. Doing so may damage the fin.

(1) Attach the protective tape (a) to the meter visor.

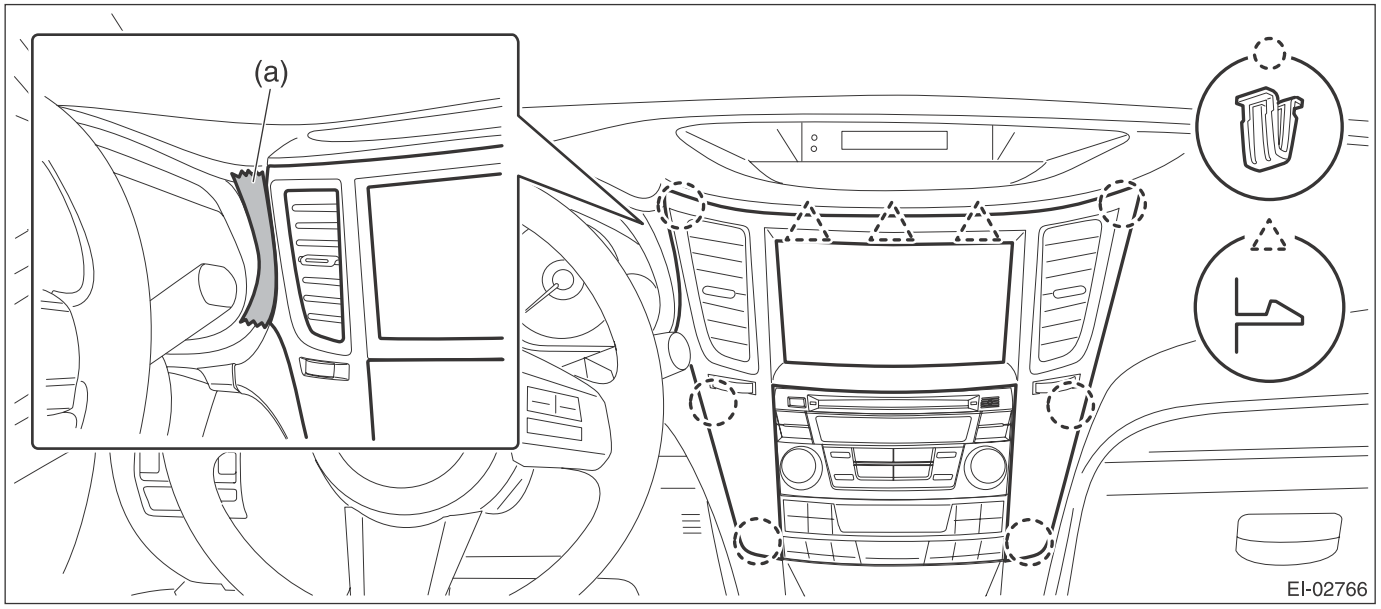

(2) Insert a finger into the air vent grille and release the left and right clips at the top of the center panel. (A), (B)
(3) Insert a finger into the air vent grille and release the left and right clips at the center of the center panel. (C), (D)

(4) Release the clips at the bottom of the center panel and remove the center panel assembly.

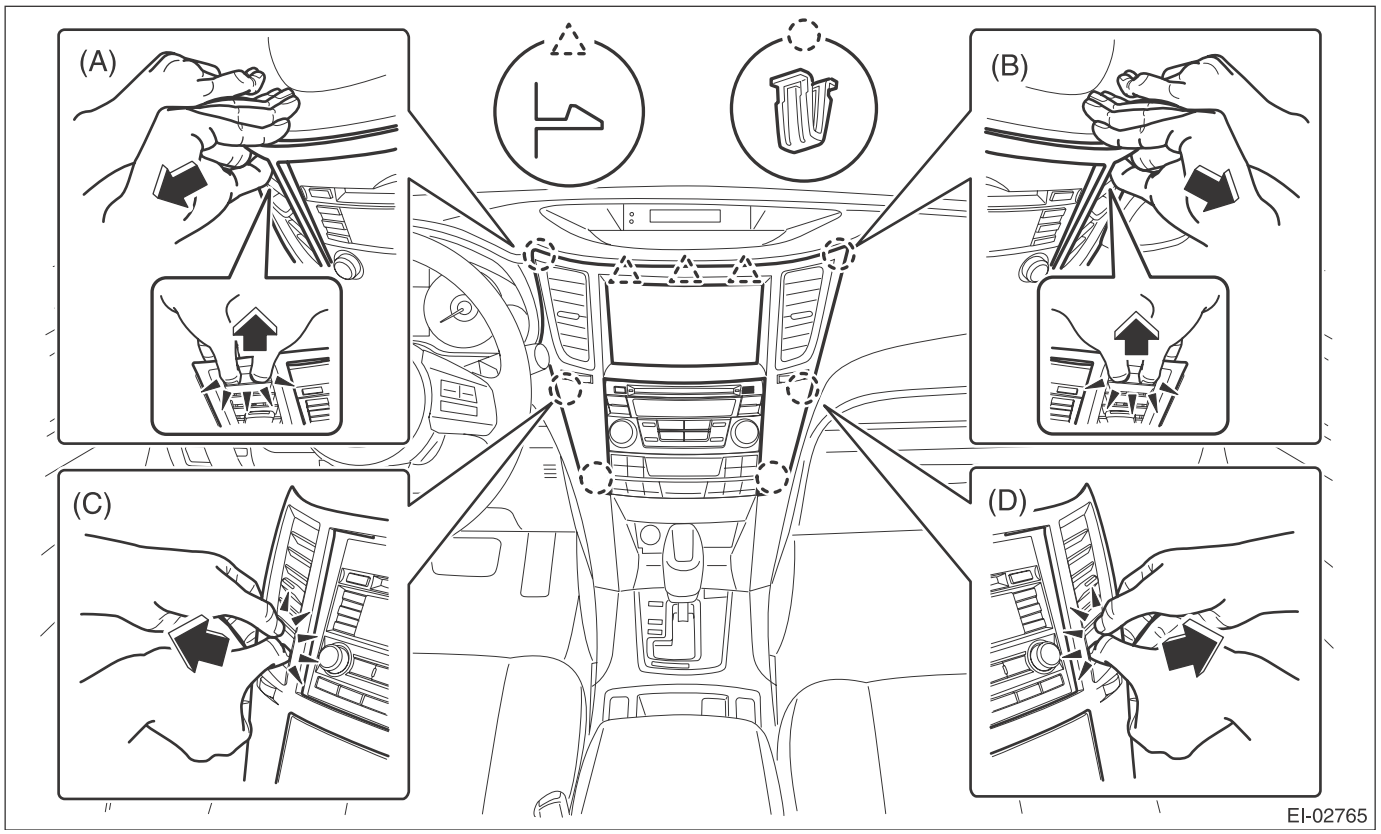

3) Remove the combination meter assembly.

CAUTION:
- **Be careful not to damage the meter or instrument panel.**
- **Pay particular attention to avoid damaging the meter glass.**

(1) Release the lock, tilt the steering column to the lowest end and fully extend the column by the telescopic system.

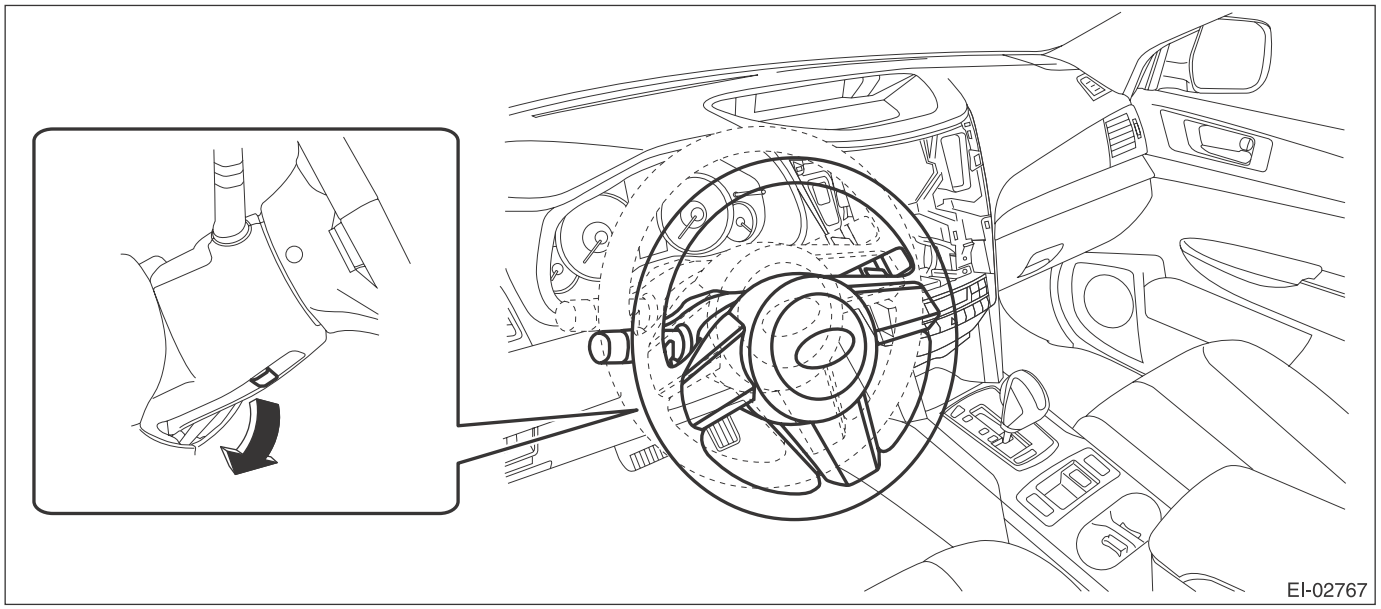

(2) Release the screws and clips, then detach the meter visor assembly.

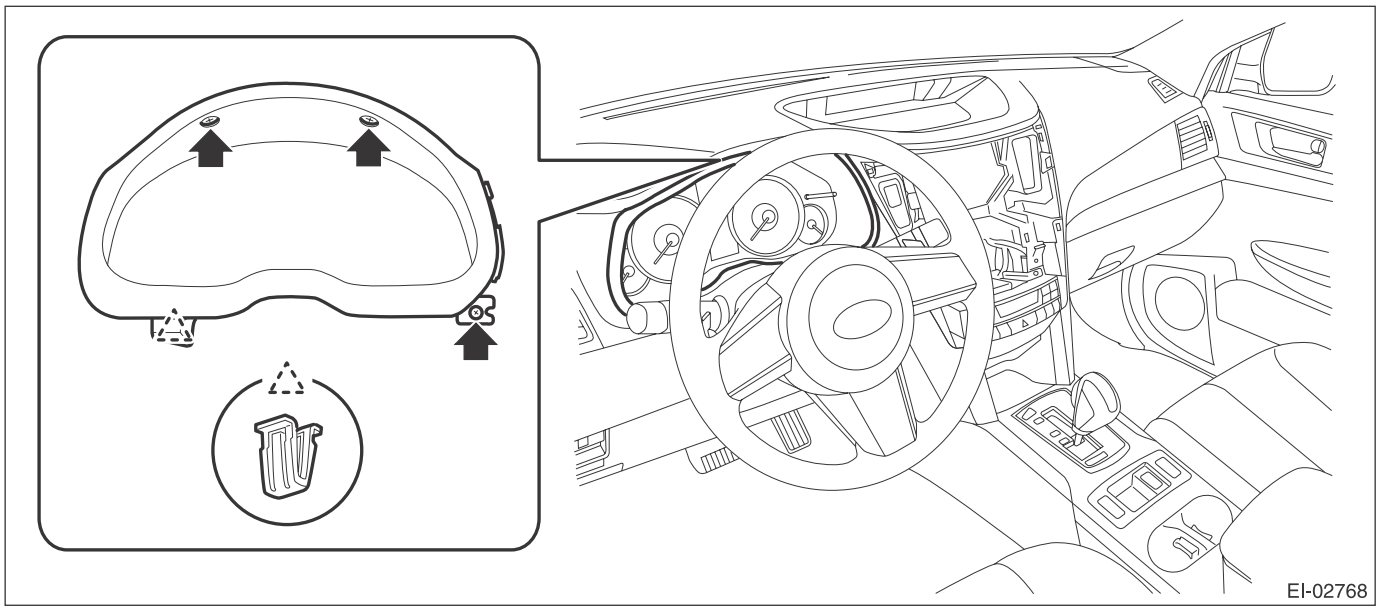

(3) Remove the screws and pull the steering COMPL upper cover toward you.

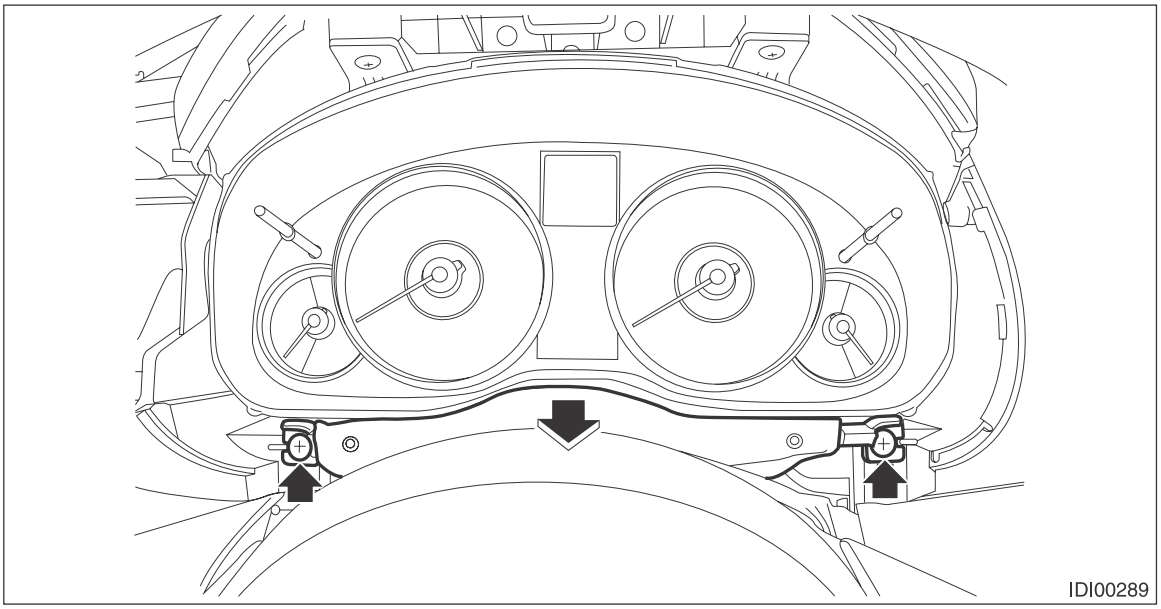

(4) Remove the screws and pull out the combination meter toward you to disconnect the connectors.

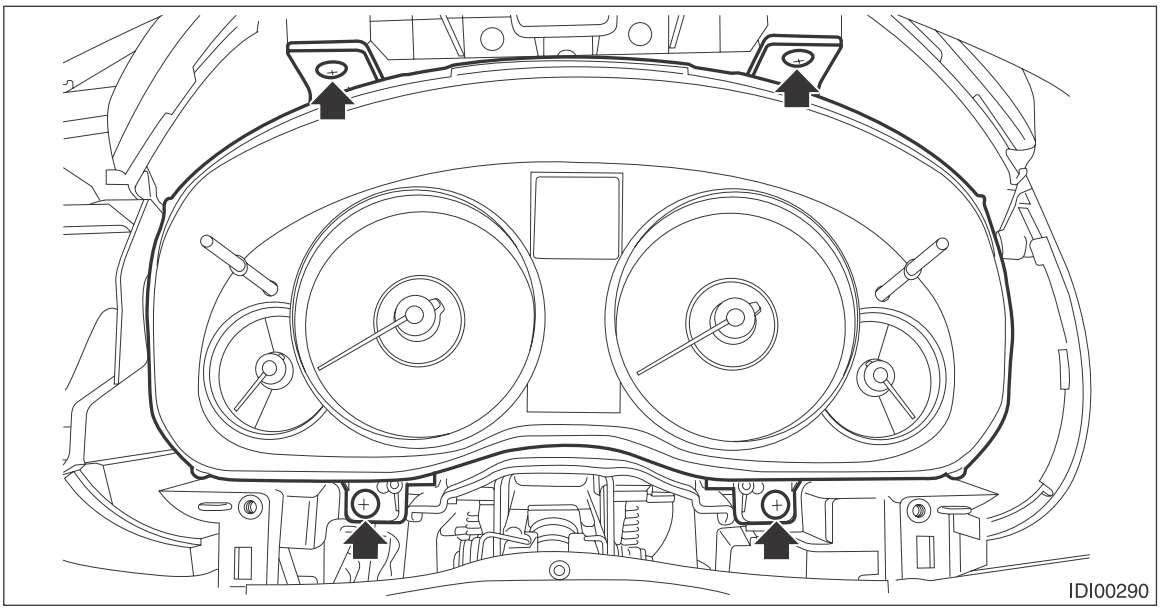

(5) Remove the combination meter assembly as shown in the figure.

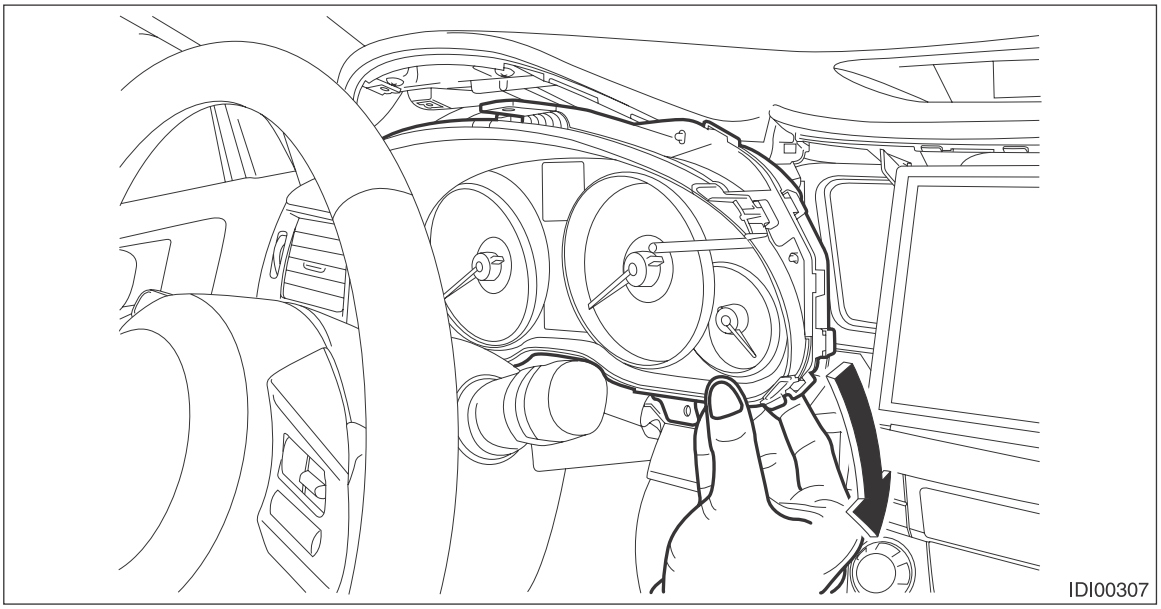

4) Remove the navigation assembly.
(1) Remove the left and right screws.

(2) Disconnect the connectors, and remove the navigation assembly.

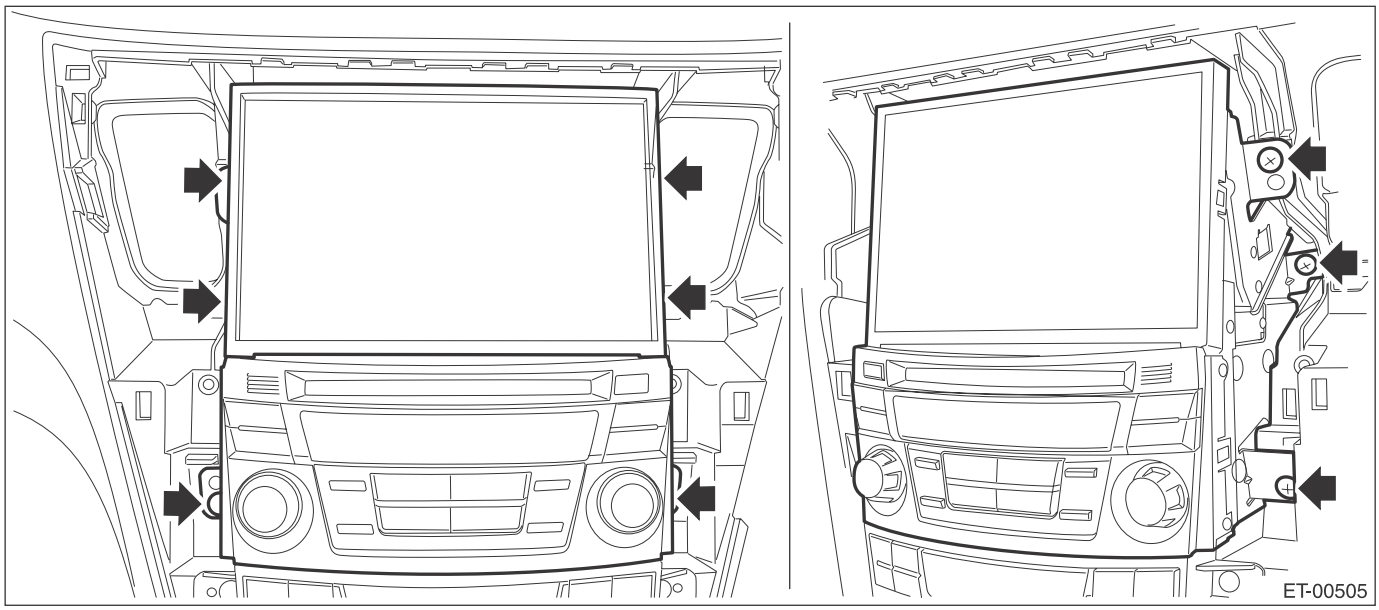

5) Remove the GPS antenna.

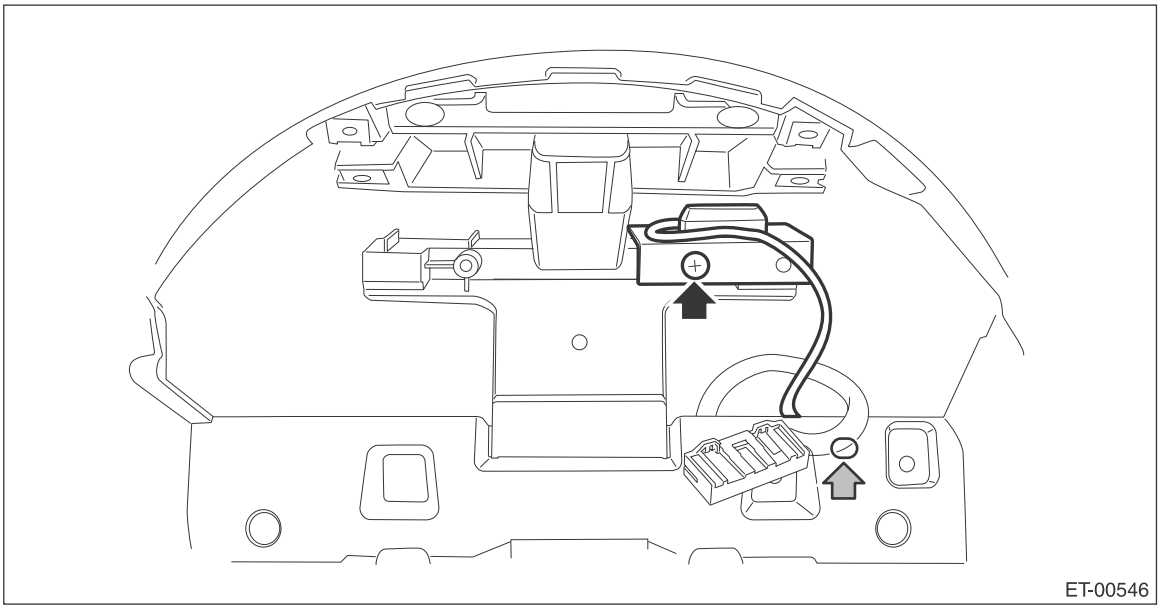

(1) Tie a string to the GPS antenna harness connector on the navigation assembly side.

NOTE:
A string makes operation easier during installation.

(2) Remove the screw and harness clamp to remove the GPS antenna.
(3) When the GPS antenna is pulled out, remove the string attached to the connector in step (1).

B: INSTALLATION

Install each part in the reverse order of removal.

14.Rearview Camera System

A: WIRING DIAGRAM

Refer to “Rearview Camera System” in the wiring diagram. <Ref. to WI-193, WIRING DIAGRAM, Rearview Camera System.>

B: REMOVAL

1. SEDAN MODEL

1) Disconnect the ground cable from battery.
2) Remove the trunk lid trim.
   (1) Remove the trunk handle.
   (2) Remove the clips and the trunk lid trim.

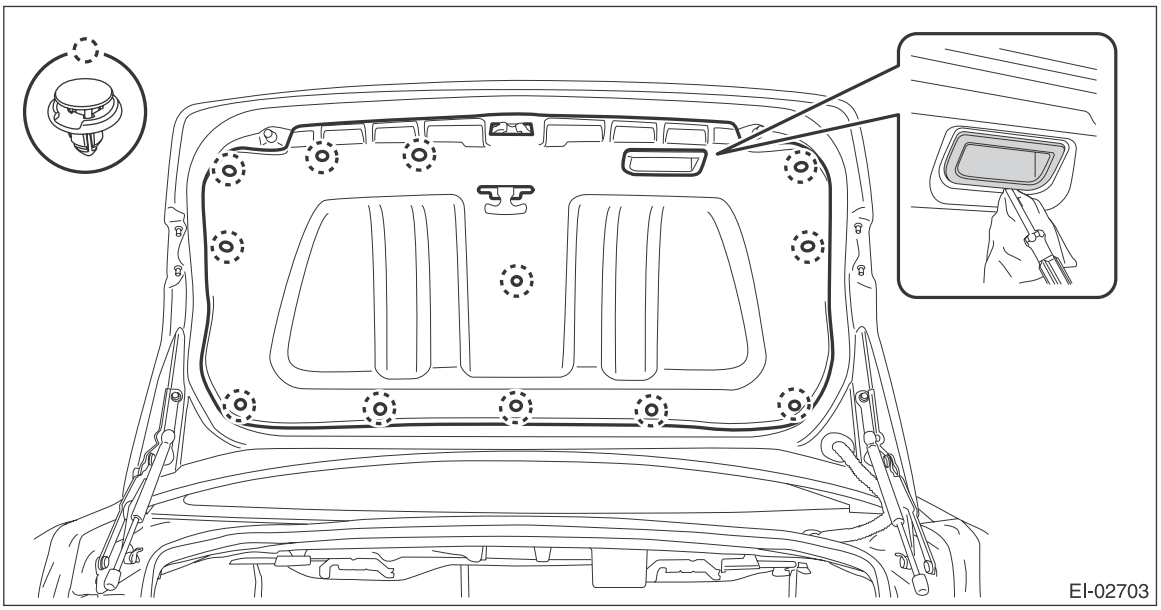

3) Remove the trunk lid garnish.
   (1) Remove the nuts.
   (2) Remove the clips and the trunk lid garnish.

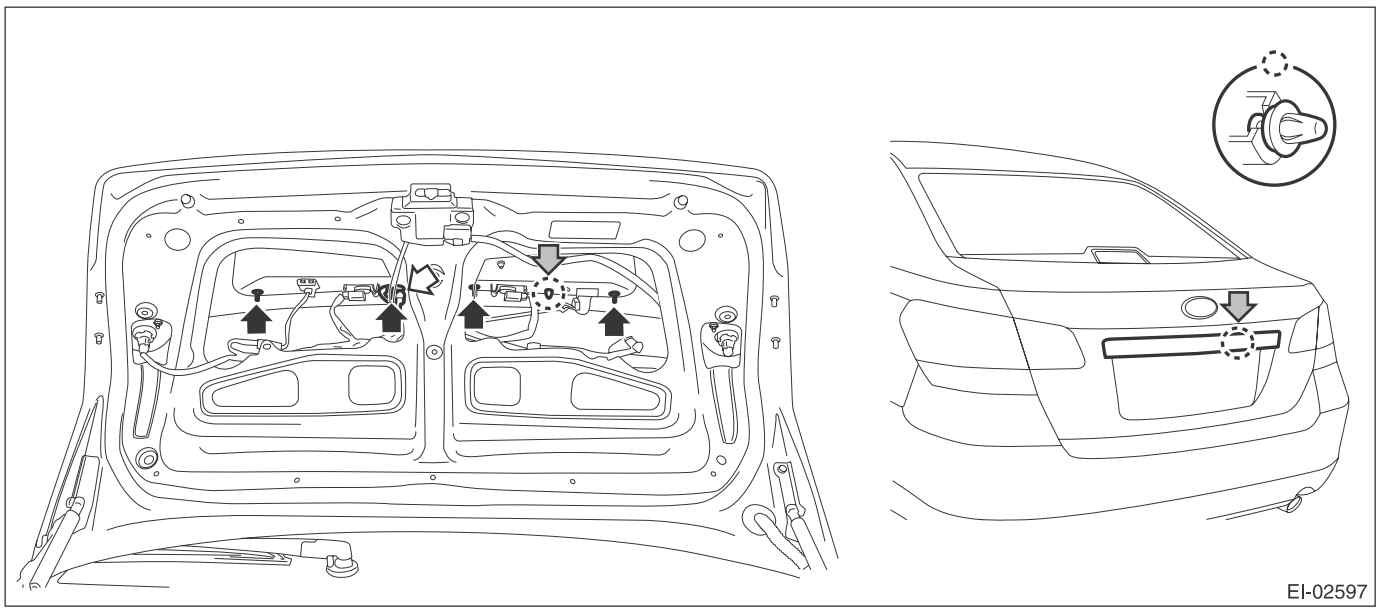

4) Remove the rearview camera.

CAUTION:
Do not drop or apply any impact to the rearview camera because it is a precision equipment.

(1) Disconnect the rearview camera connector.
(2) Remove the bolt from the face of trunk.
(3) Disconnect the claws and then remove the rearview camera assembly.

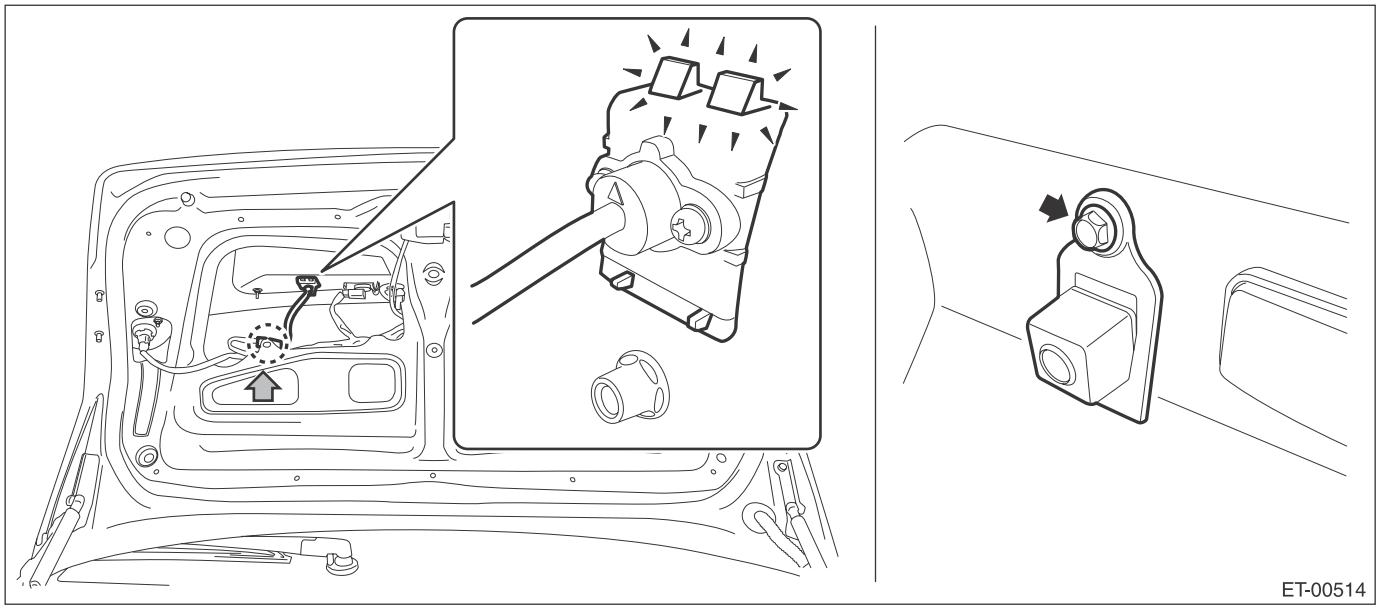

2. OUTBACK MODEL

1) Disconnect the ground cable from battery.
2) Remove the rear gate trim.
(1) Remove the rear gate upper trim.
a) Remove the claws on the trim edge.
b) Disconnect the claws in the center of trim, and remove the rear gate upper trim.

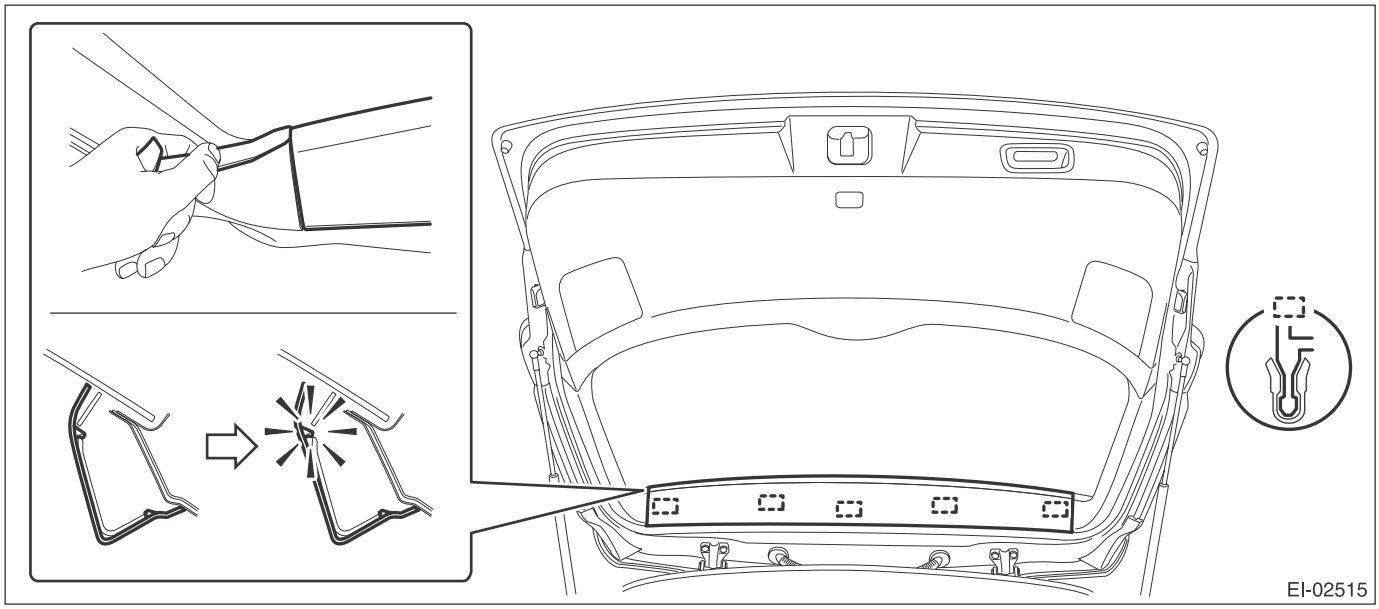

(2) Remove the rear gate pillar trim.
a) Release the claws.

b) Remove the claws on the bottom of trim, and remove the rear gate pillar trim.

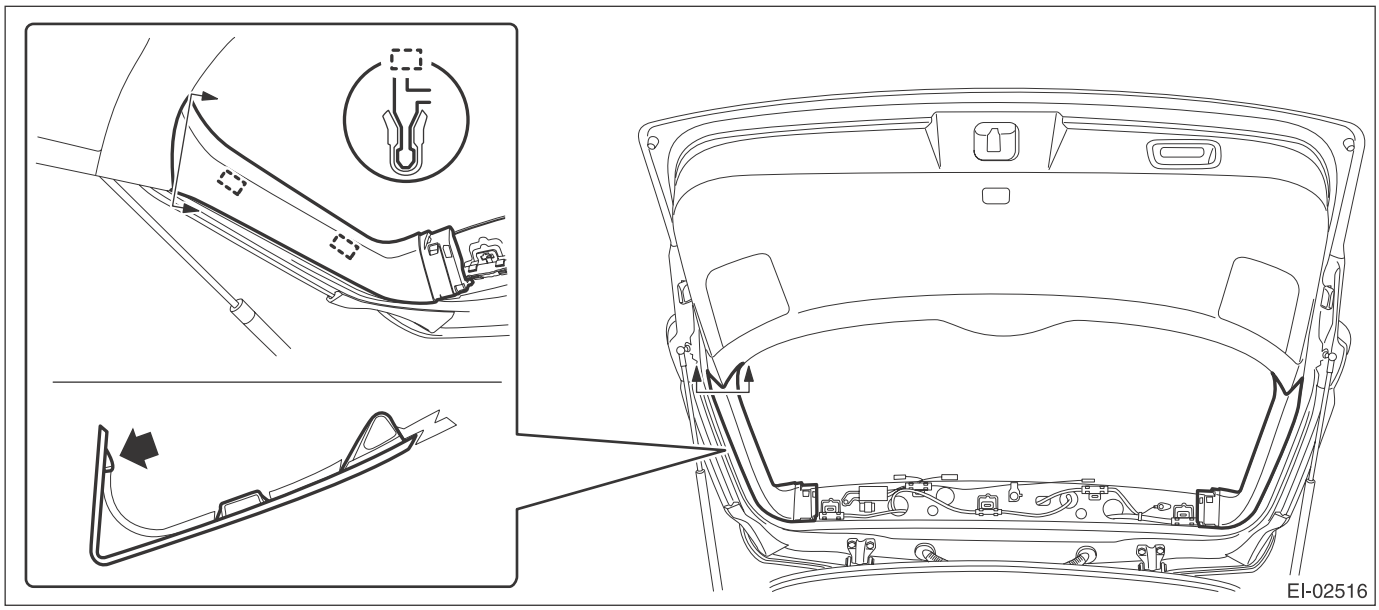

(3) Remove the hand grip of rear gate.

CAUTION:
- **Be careful not to scratch the trim.**
- **To protect the trim from damage, attach a protective tape to the tool in use.**

a) Insert a precision screwdriver (a).
b) With the screwdriver inserted, push it down to release the claw and pull it toward you.
c) Remove the screws and detach the hand grip.

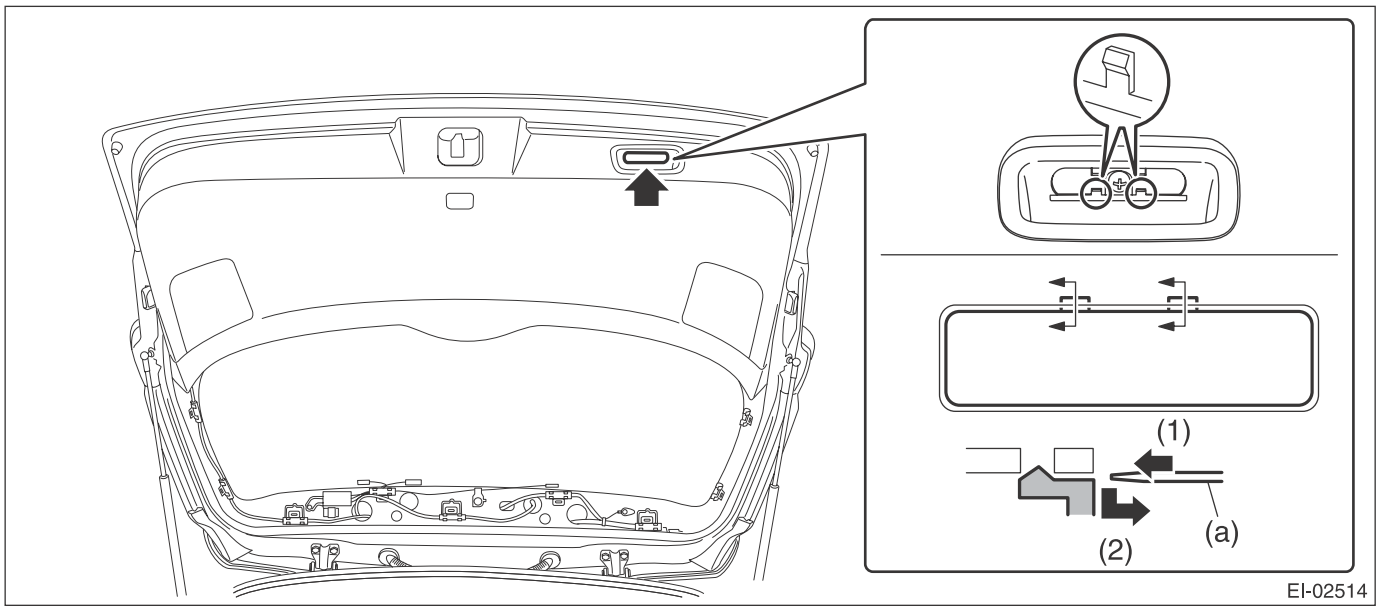

(4) Remove the rear gate lower trim.
a) Remove the clips on both ends.

b) Release the clips and remove the rear gate lower trim.

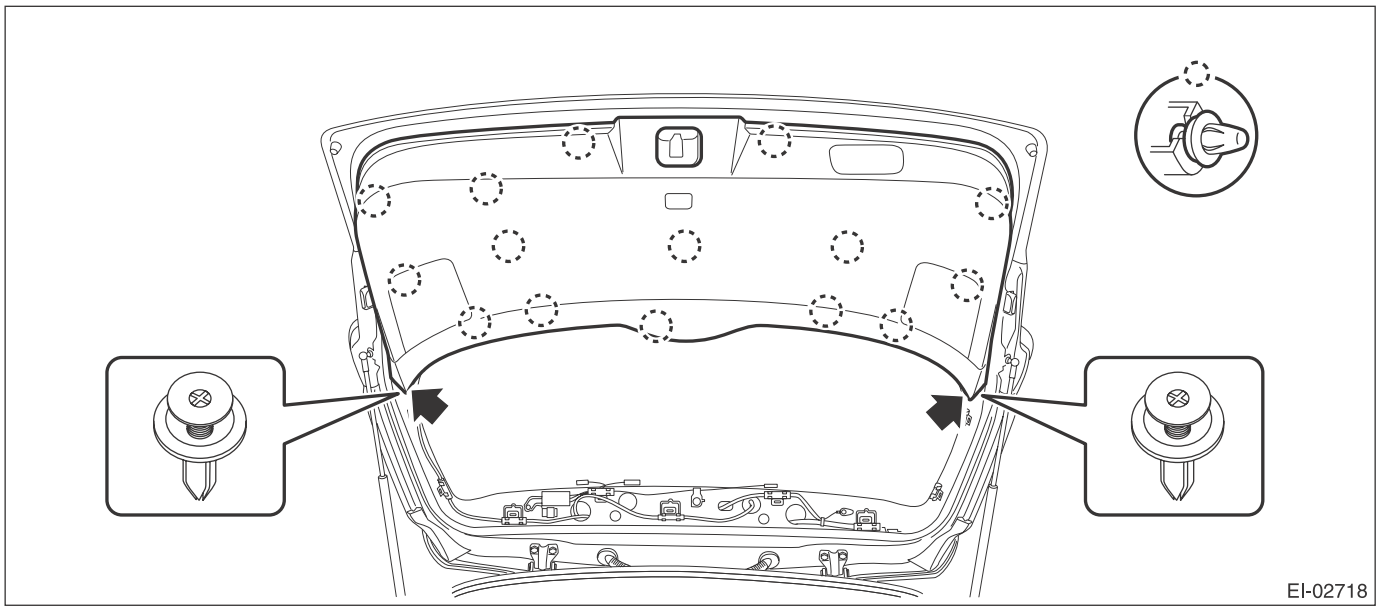

3) Remove the rear gate garnish.
(1) Release the clips and claws, then detach the rear finisher light side cover.

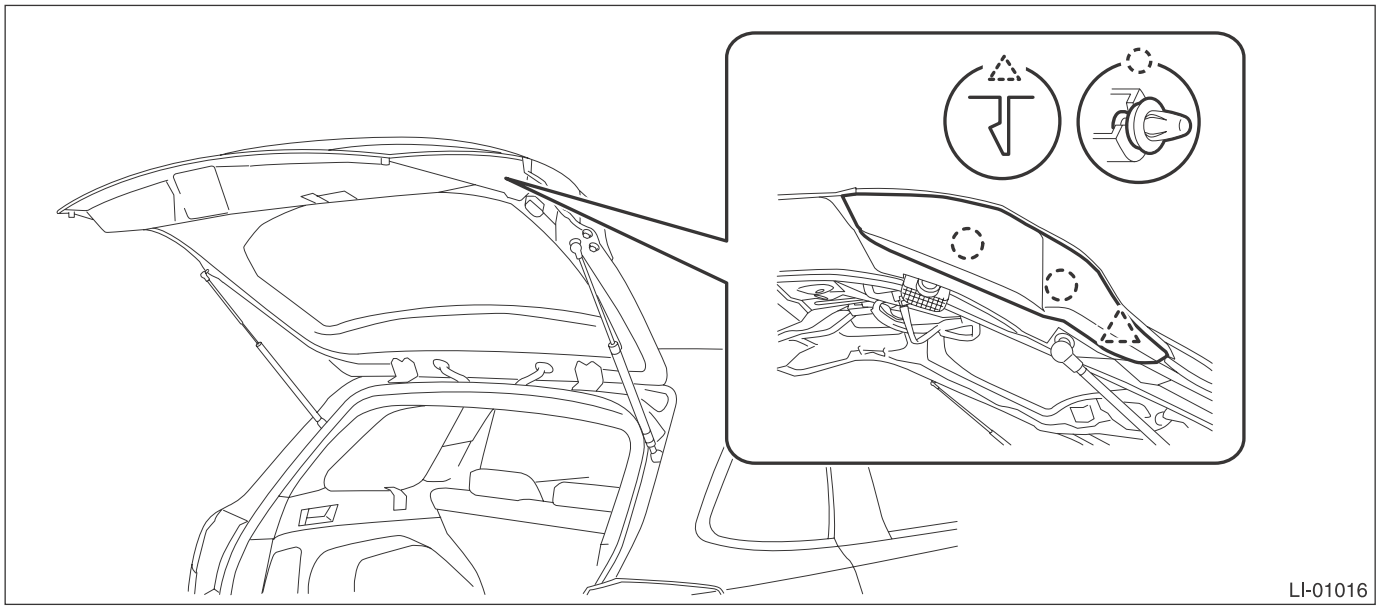

(2) Disconnect the harness connector of license plate light assembly.
(3) Remove the nuts.

(4) Remove the clips and the rear gate garnish.

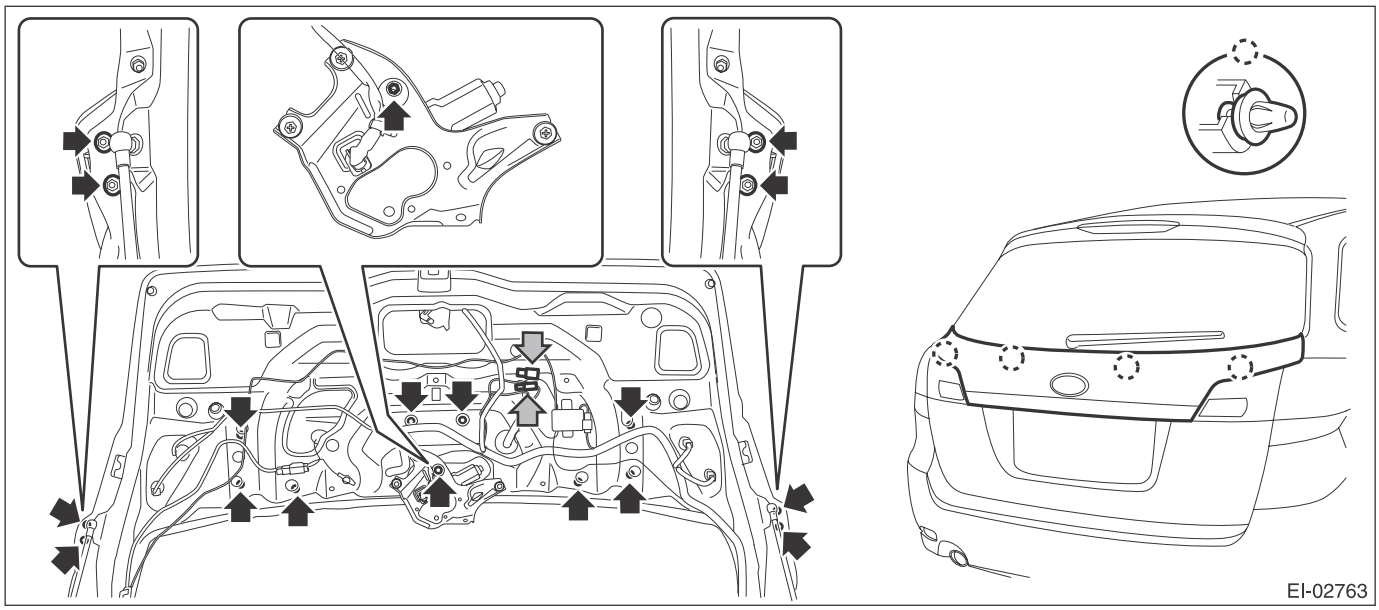

4) Remove the rearview camera assembly.

CAUTION:
Do not drop or apply any impact to the rearview camera because it is a precision equipment.

(1) Disconnect the rearview camera connector.
(2) Remove the nut and bolt on the back side of rear gate.
(3) Disconnect the claws (for temporary fastening) and remove the rearview camera assembly.

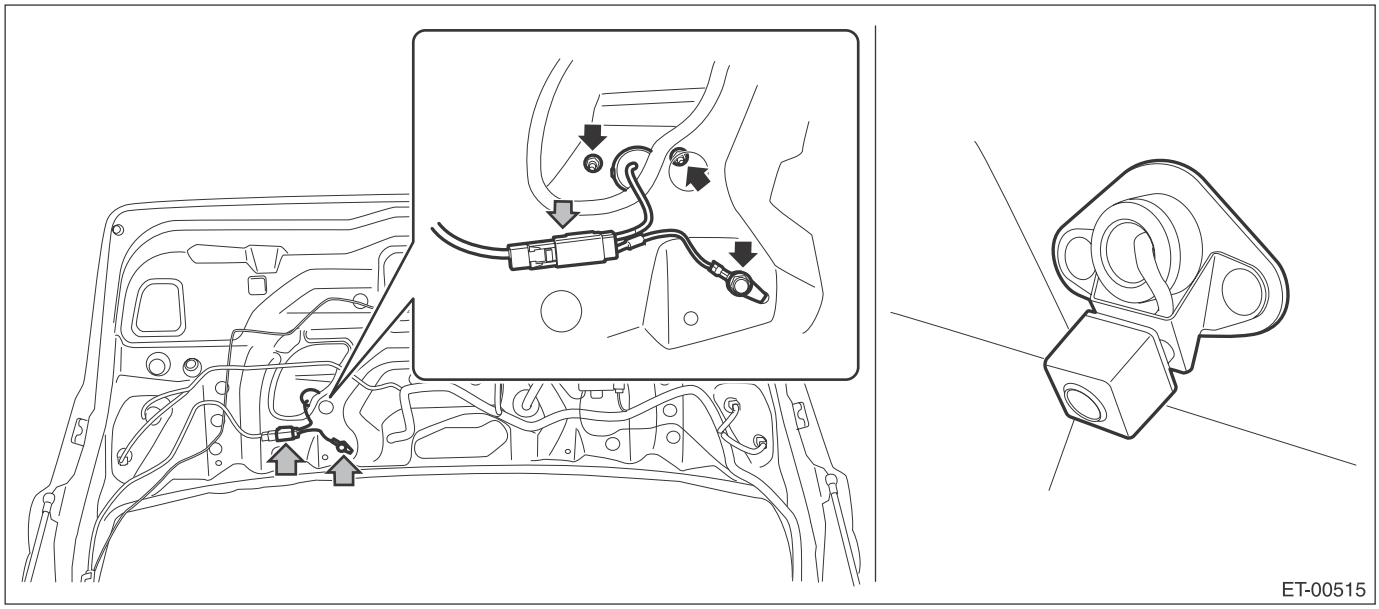

C: INSTALLATION

CAUTION:
Be sure to confirm the marker position, whenever the rearview camera is removed/installed/replaced.
Install each part in the reverse order of removal.

Tightening torque:
Sedan model
Rearview camera (bracket): 7.5 N·m (0.76 kgf-m, 5.5 ft-lb)
Trunk lid garnish: 4.5 N·m (0.46 kgf-m, 3.3 ft-lb)
OUTBACK model
Rearview camera (bracket (nut)): 4.5 N·m (0.46 kgf-m, 3.3 ft-lb)
Rearview camera (ground (bolt)): 13 N·m (1.33 kgf-m, 9.6 ft-lb)
Rear gate garnish: 4.5 N·m (0.46 kgf-m, 3.3 ft-lb)
Rear wiper motor & wiper arm: <Ref. to WW-4, REAR WIPER, COMPONENT, General Description.>

D: INSPECTION

1) Park the vehicle at the level place where there are enough area at the rear of the vehicle.
2) Attache the tape as the target point for standard at the floor rearward of the vehicle as shown in the figure below.

NOTE:
Standard tape width is about 30 — 50 mm (1.18 — 1.97 in) and brilliant color shall be used.

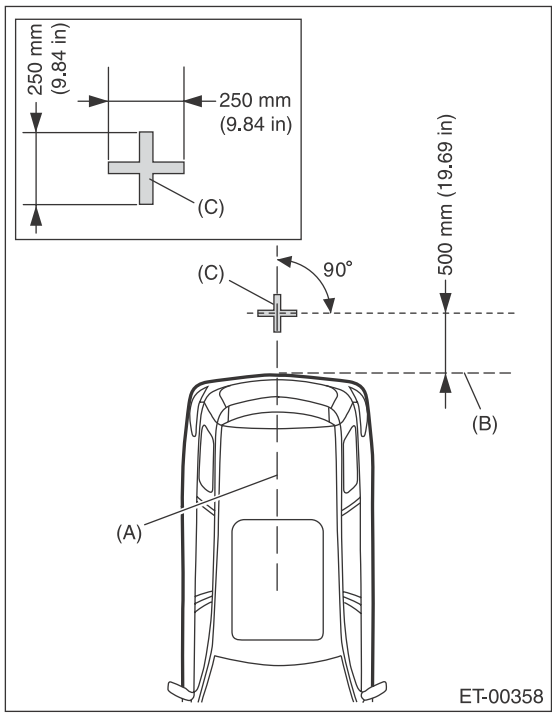

(A) Vehicle body center line
(B) Rear edge of bumper
(C) Target point

3) Confirm the following before checking the corresponding items.
- If the display is blank.

Rearview camera image is not displayed. (Navigation screen is displayed normally.)
1. Check the condition of back sensor connection. <Ref. to ET-5, CHECK EACH VEHICLE SIGNAL, INSPECTION, Navigation System.>
2. Check the condition of rearview camera connection. <Ref. to ET-4, CHECK EACH CONNECTION, INSPECTION, Navigation System.>

- If the marker is not displayed.
  1. Check the UART communication. <Ref. to ET-4, CHECK EACH CONNECTION, INSPECTION, Navigation System.>
- If the marker position is not aligned.
  1. Adjust the marker position according to the MARKER ADJUSTMENT MODE. <Ref. to ET-46, MARKER ADJUSTMENT MODE, ADJUSTMENT, Rearview Camera System.>

E: ADJUSTMENT

1. MARKER ADJUSTMENT MODE

1) Prepare the target point. <Ref. to ET-45, INSPECTION, Rearview Camera System.>
2) Display the audio OFF screen by turning the ignition switch to ON, then touch the screen in the order of (1) — (6).

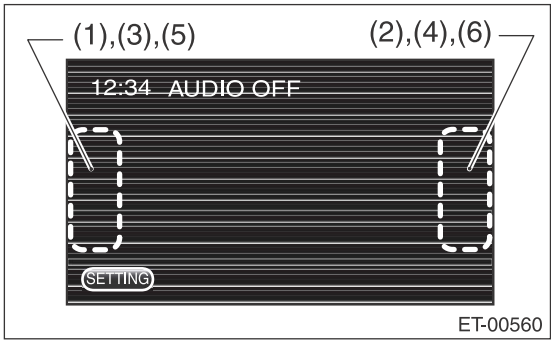

3) When the Dealer Diag menu screen is displayed, touch the “RearCamera Setup” from the items.

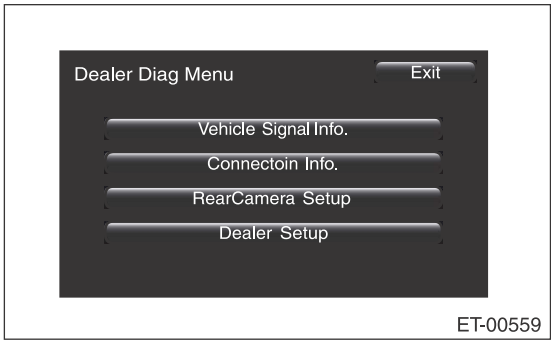

CAUTION:
Do not select the item other than “RearCamera Setup”. The navigation system can not operate normally.

4) Shift the select lever to the “R” position to display the image of the rearview camera.

5) Touch the adjustment keys on the display screen to adjust the marker line.
- Sedan model

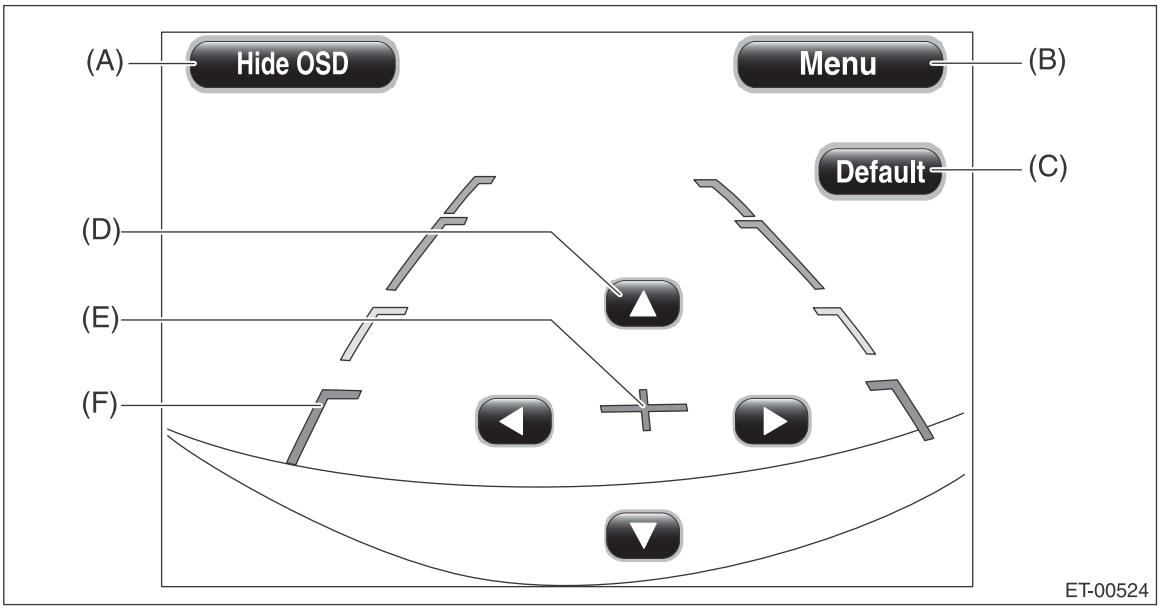

- OUTBACK model

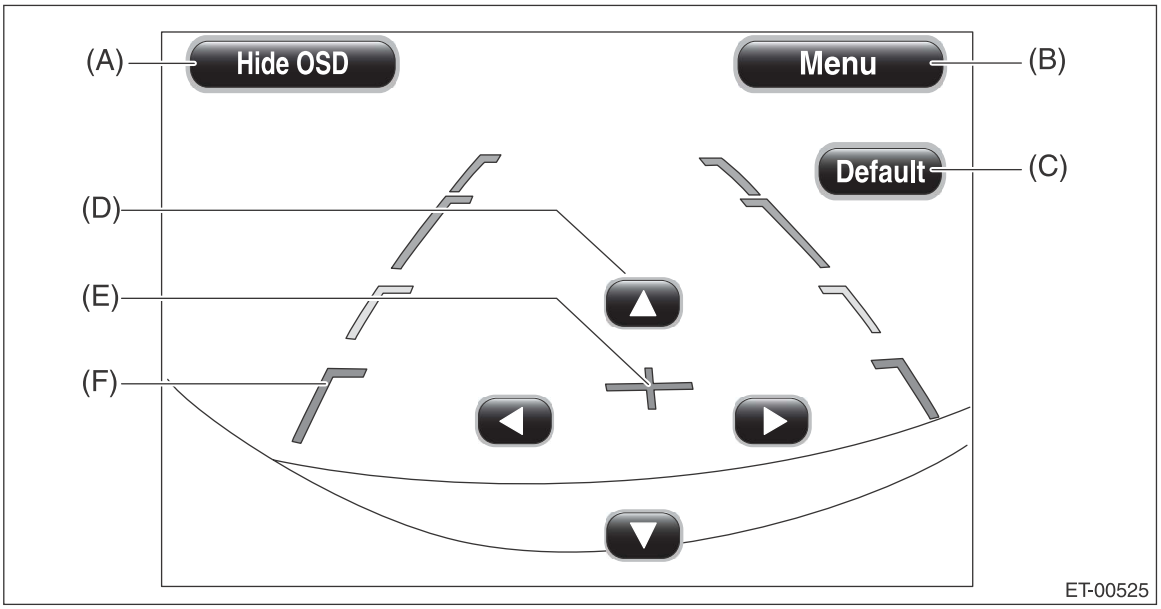

(A)	Hide OSD key	(C)	Default key	(E)	Cross line
(B)	Menu key	(D)	Adjustment keys	(F)	Vehicle width and distance reference line

(1) Confirm that the target point position in the display screen is identified.
(2) Adjust by touching the adjustment keys so that the cross line (E) and target point join together.

NOTE:
- Hide OSD key: Touching the Hide OSD key hides the operation keys. When the operation keys are not displayed, touching the display screen displays the operation keys again.
- Menu key: Touching this key shifts to the Dealer Diag Menu screen.
- Default key: Touching this key resets the adjustment values to the default condition.

6) Turn the ignition switch to OFF and wait for 60 seconds or more before turning the ignition switch to ON again.

CAUTION:
If the ignition switch is turned to OFF, be sure to wait for 60 seconds or more before turning the ignition switch to ON again.
If turning the ignition switch to ON again or disconnecting the ground cable from battery within 60 seconds after turning the ignition switch to OFF, the navigation unit data updating can not be performed correctly.

7) Shift the select lever to the “R” position to display the image of the rearview camera.
8) Confirm that the marker line position is correctly adjusted before turning the ignition switch to OFF, then finish the procedures.

15.Front Accessory Power Supply Socket

A: WIRING DIAGRAM

Refer to “Front Accessory Power Supply Socket System” in the wiring diagram. <Ref. to WI-148, WIRING DIAGRAM, Front Accessory Power Supply Socket System.>

B: REMOVAL

1) Disconnect the ground cable from battery.
2) Remove the center panel assembly.

CAUTION:
Do not put your finger on the fin of the air vent grille. Doing so may damage the fin.

(1) Attach the protective tape (a) to the meter visor.

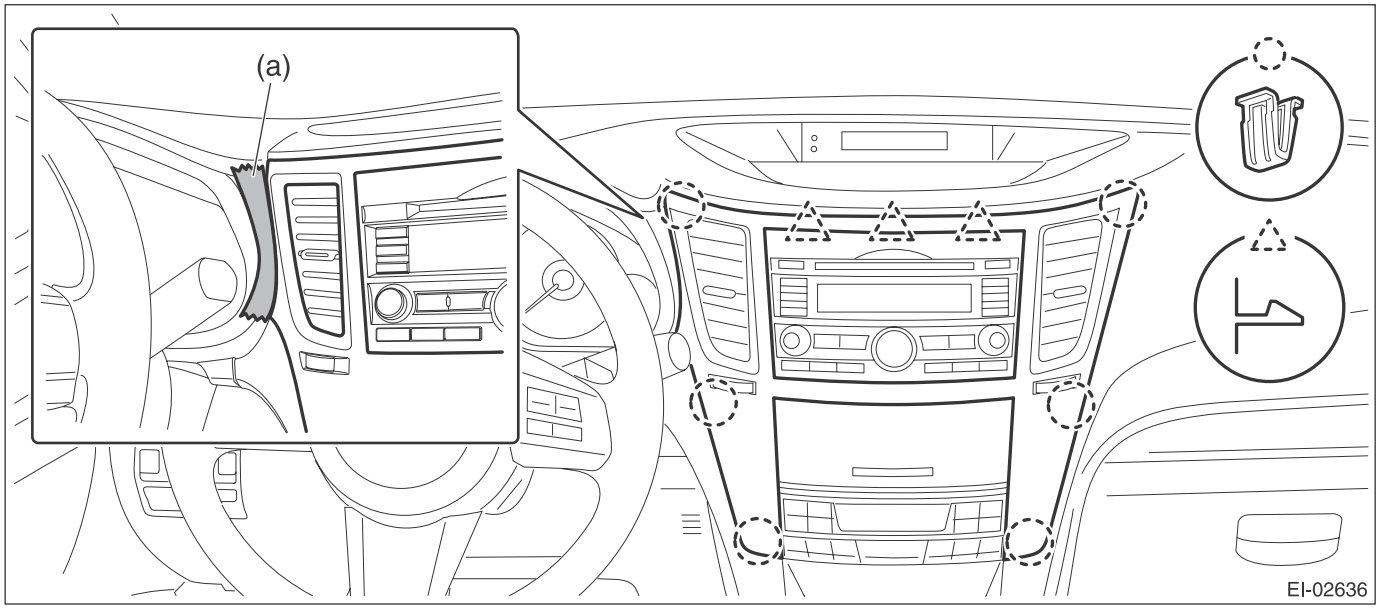

(2) Insert a finger into the air vent grille and release the left and right clips at the top of the center panel. (A), (B)
(3) Insert a finger into the air vent grille and release the left and right clips at the center of the center panel. (C), (D)

(4) Release the clips at the bottom of the center panel and remove the center panel assembly.

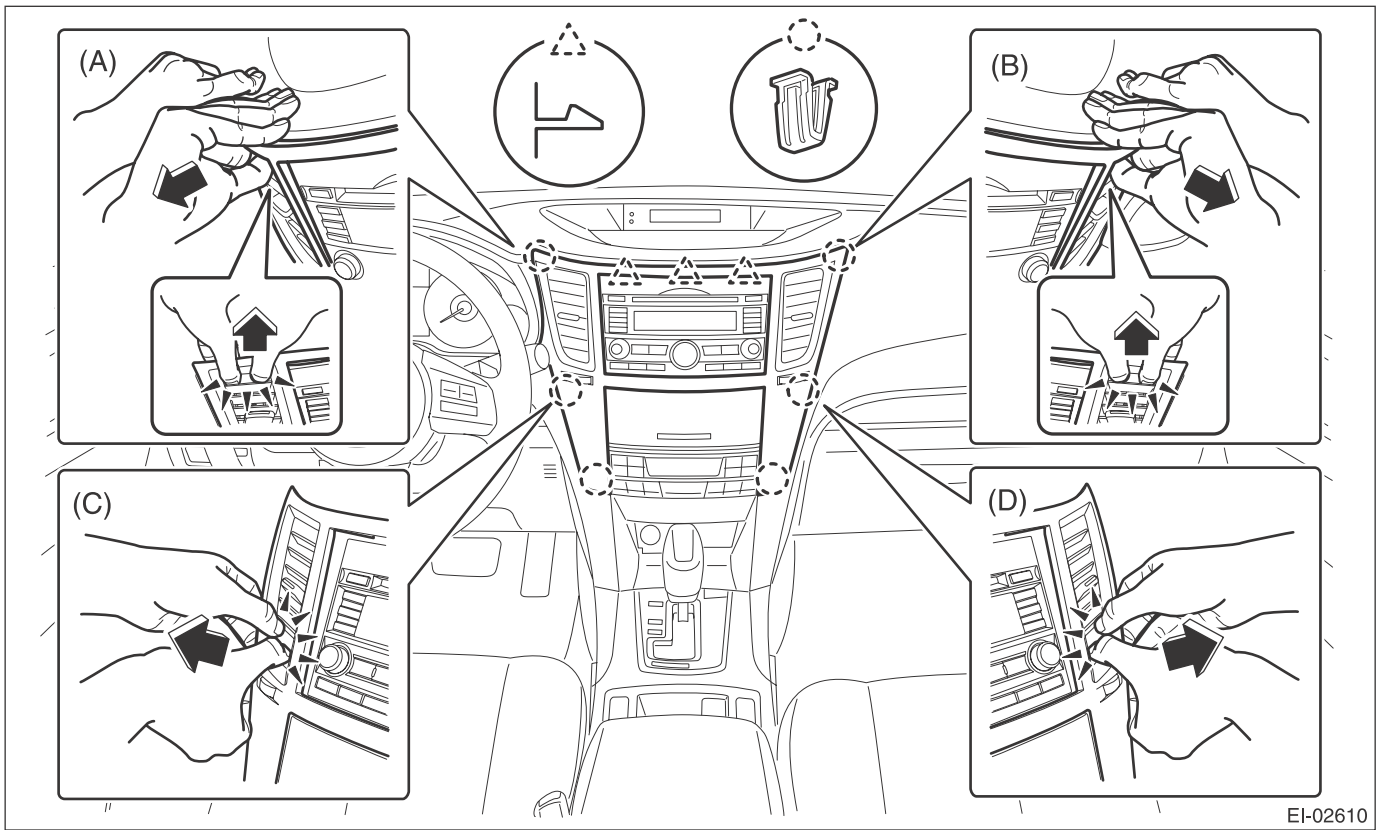

3) Remove the audio assembly.
(1) Remove the left and right screws, and partially pull the audio out from center console.
(2) Disconnect the connectors, and remove the audio assembly.

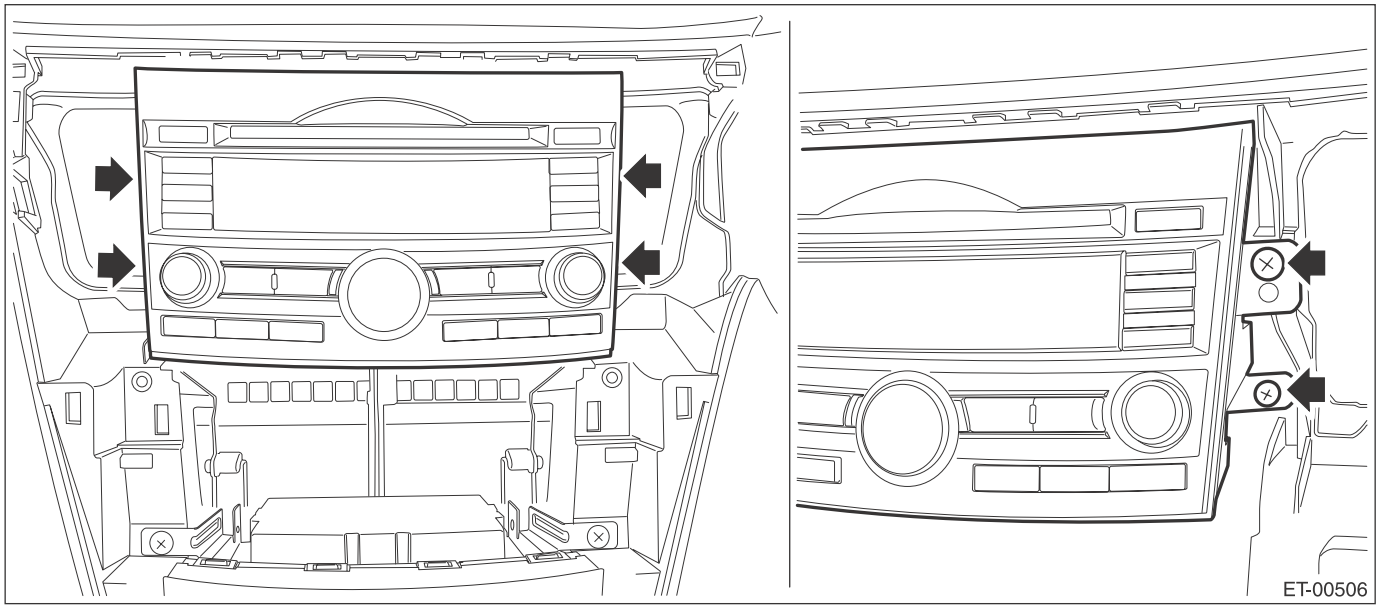

4) Remove the navigation assembly. (model with navigation)
(1) Remove the left and right screws.

(2) Disconnect the connectors, and remove the navigation assembly.

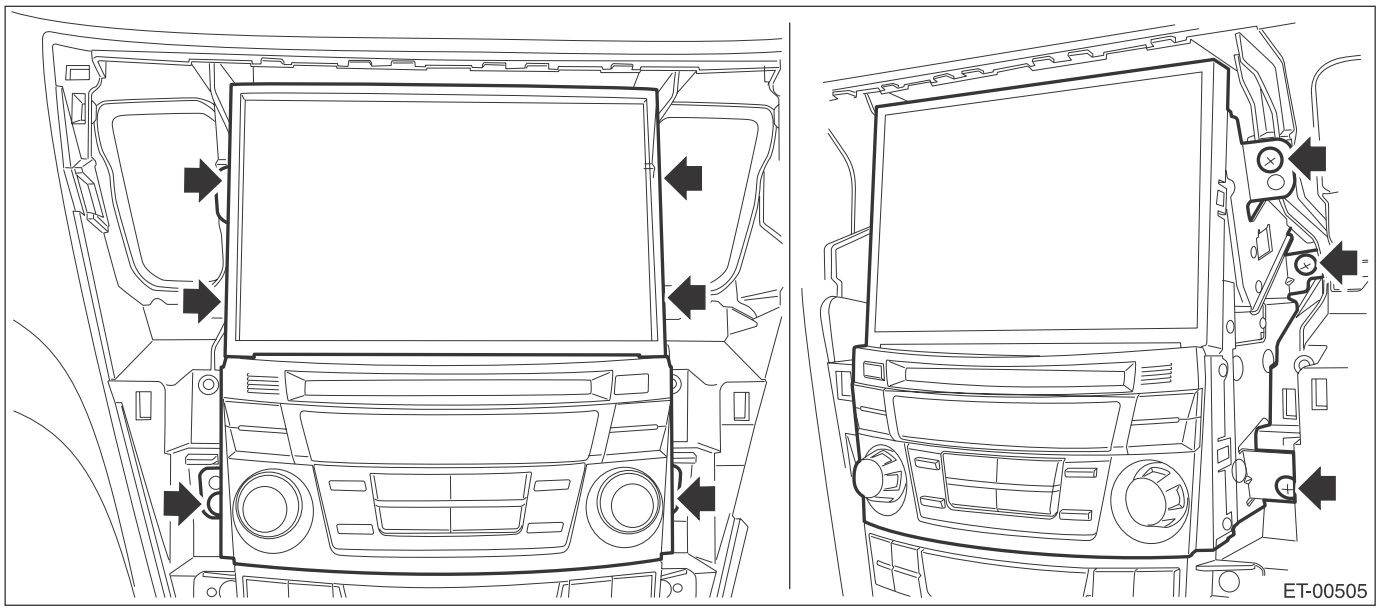

5) Remove the control panel assembly.
(1) Remove the screws, and pull out the control panel assembly toward you.
(2) Disconnect the connector, and remove the control panel assembly.

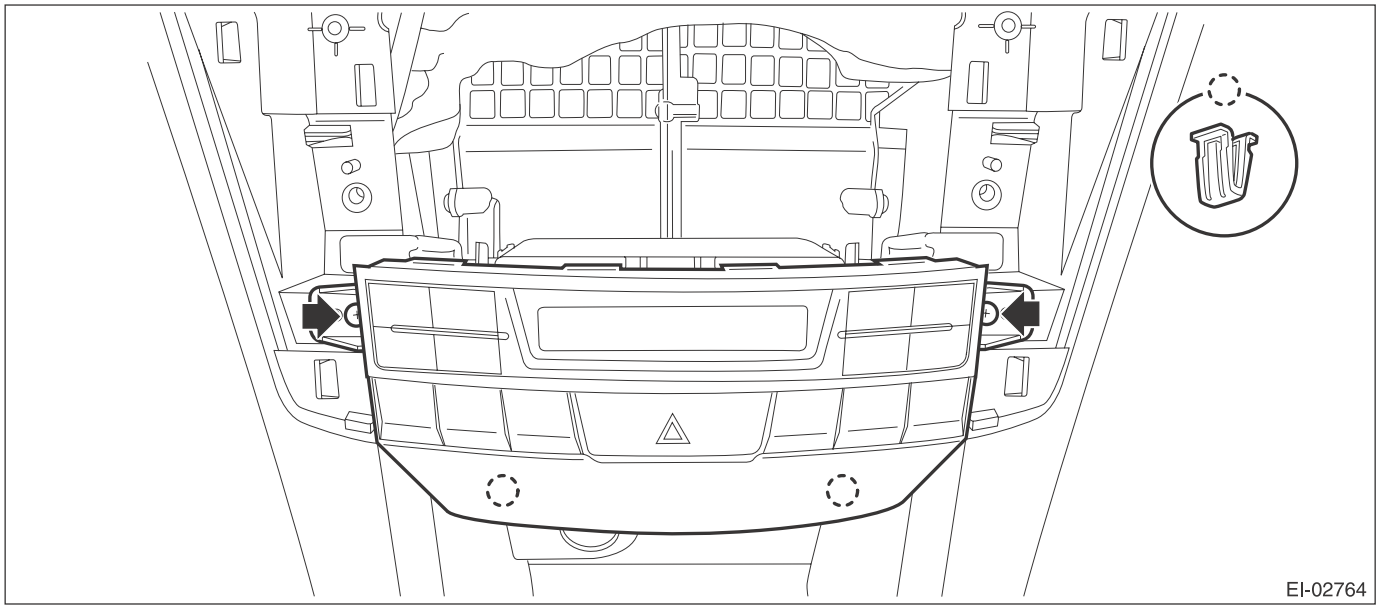

6) Remove the front accessory power supply socket.
(1) Disconnect the connector and turn the securing cover to remove it.

(2) Pull the accessory power supply socket out to remove.

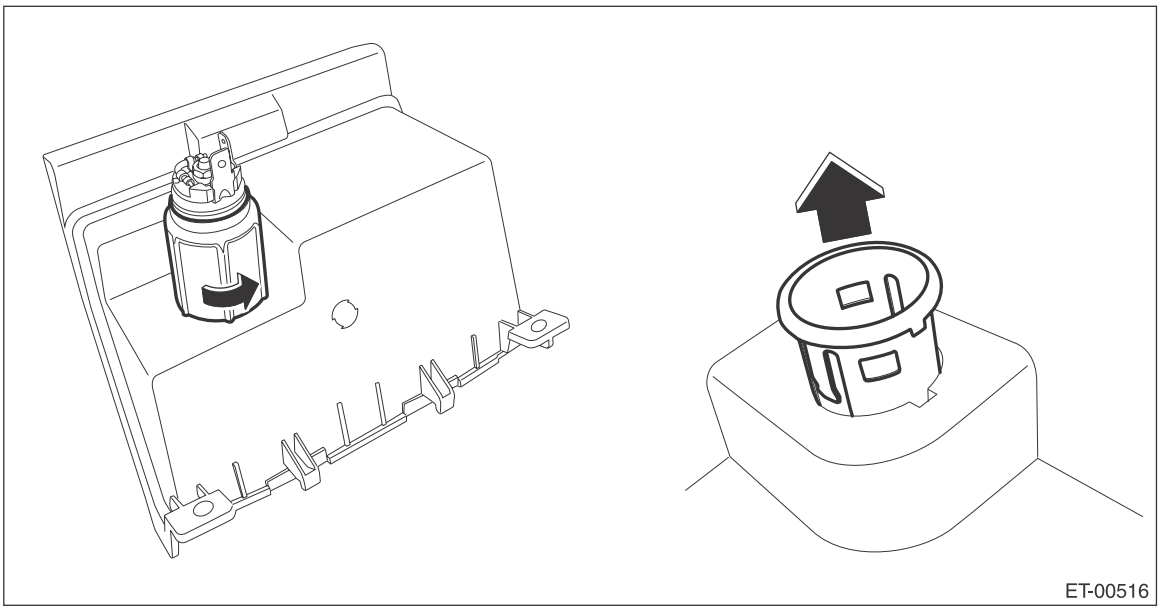

C: INSTALLATION

Install each part in the reverse order of removal.

16.Rear Accessory Power Supply Socket

A: WIRING DIAGRAM

Refer to “Rear Accessory Power Supply Socket System” in the wiring diagram. <Ref. to WI-191, WIRING DIAGRAM, Rear Accessory Power Supply Socket System.>

B: REMOVAL

1) Remove the console front cover assembly.

- MT model
  1. Remove the shift knob.
  2. Release the clips and claws, then pull up the console front cover assembly.

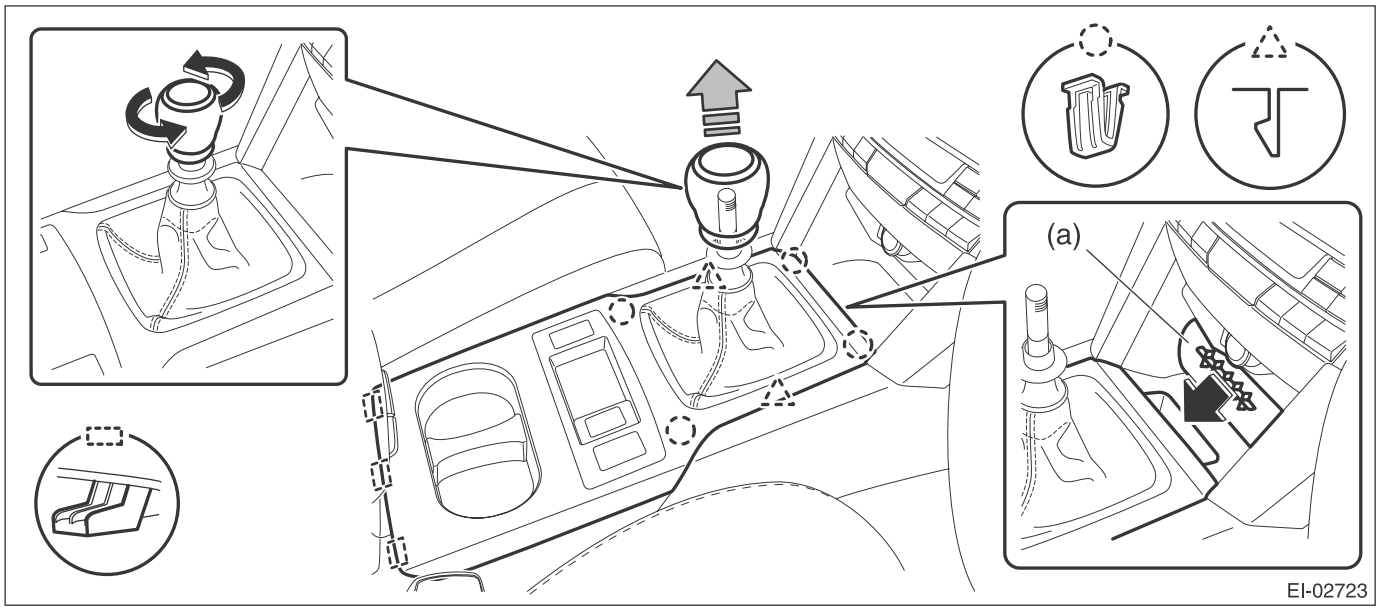

NOTE:
Turn over the front center pocket mat (a) and pull up the console front cover from the slit.

  3. Disconnect the harness connector and remove the console front cover assembly.

- AT/CVT model
  1. Remove the select lever knob.
     a. Lower the cover grip AT.
     b. Remove the clamp grip pin, then remove the select lever knob.

2. Release the clips and claws, then pull up the console front cover assembly.

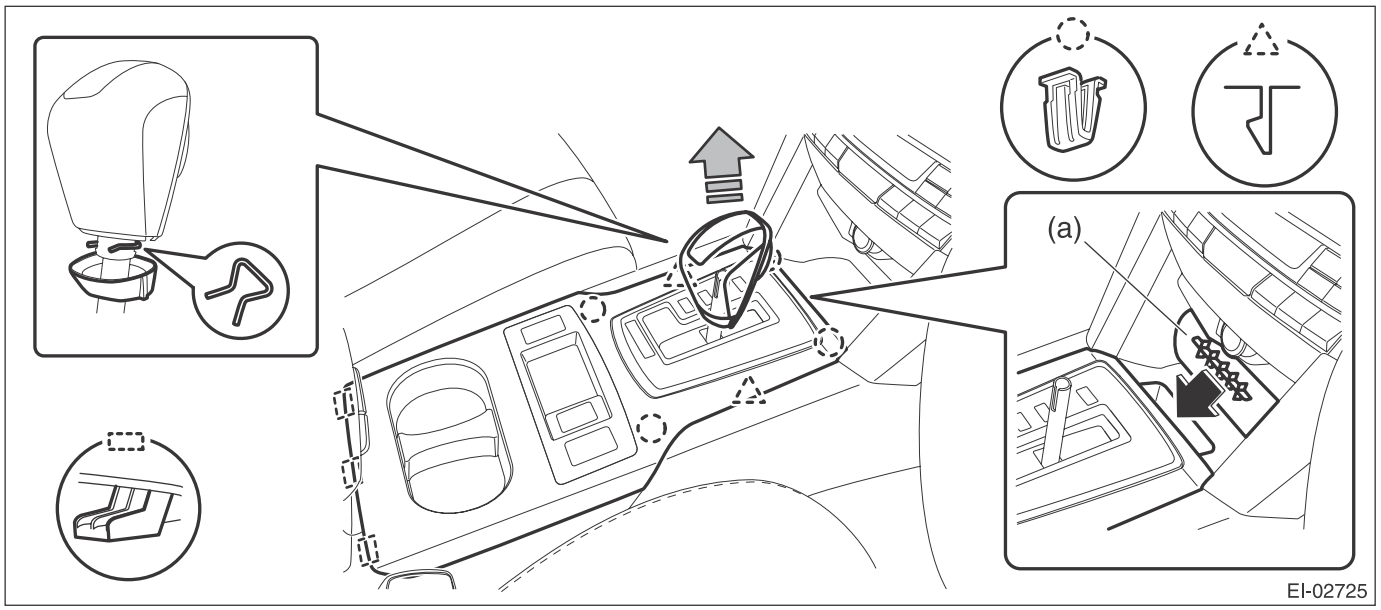

NOTE:
Turn over the front center pocket mat (a) and pull up the console front cover from the slit.

3. Disconnect the harness connector and remove the console front cover assembly.

2) Remove the console front side cover assembly.
(1) Remove the screws and release the clips (A) to (D) in order.
(2) Remove the console front side cover assembly by pulling it up.

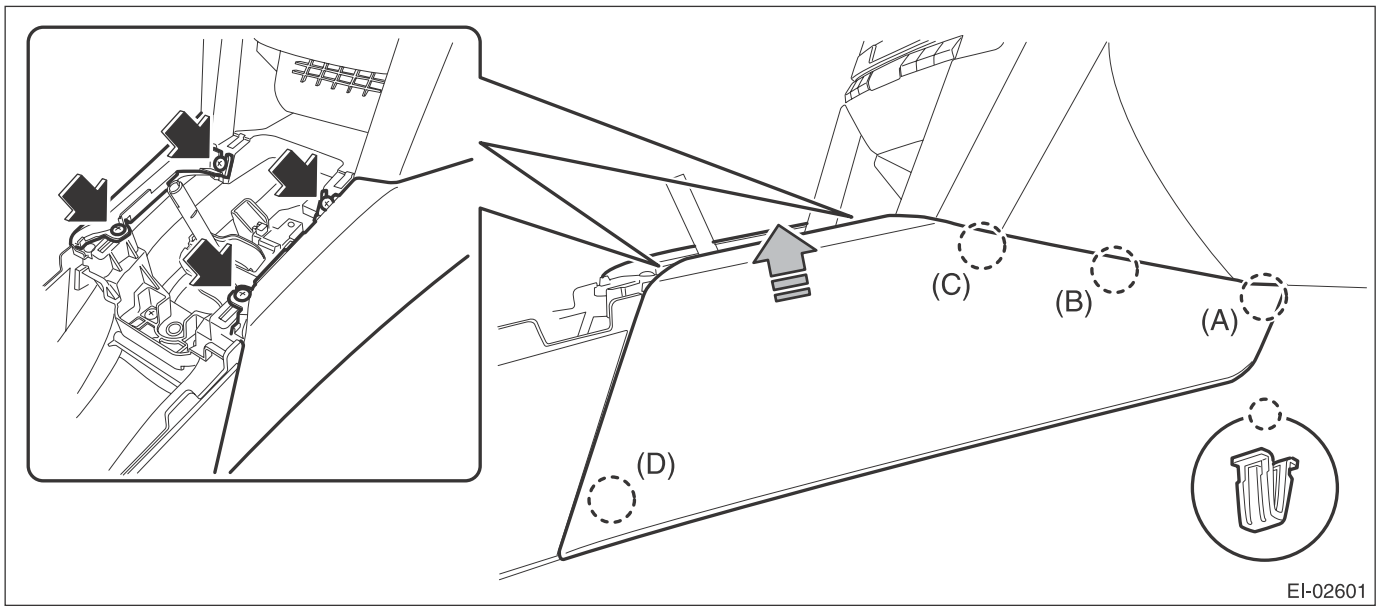

3) Remove the console box assembly.
(1) Move the seat forward, and remove the bolts after detaching the left and right caps.

NOTE:
For a model with power seat, connect the battery ground cable and move the seat. Then, disconnect the battery ground cable again and wait for 60 seconds at least before restarting the work.

(2) Remove the screws, disconnect the harness connector and remove the console box assembly.

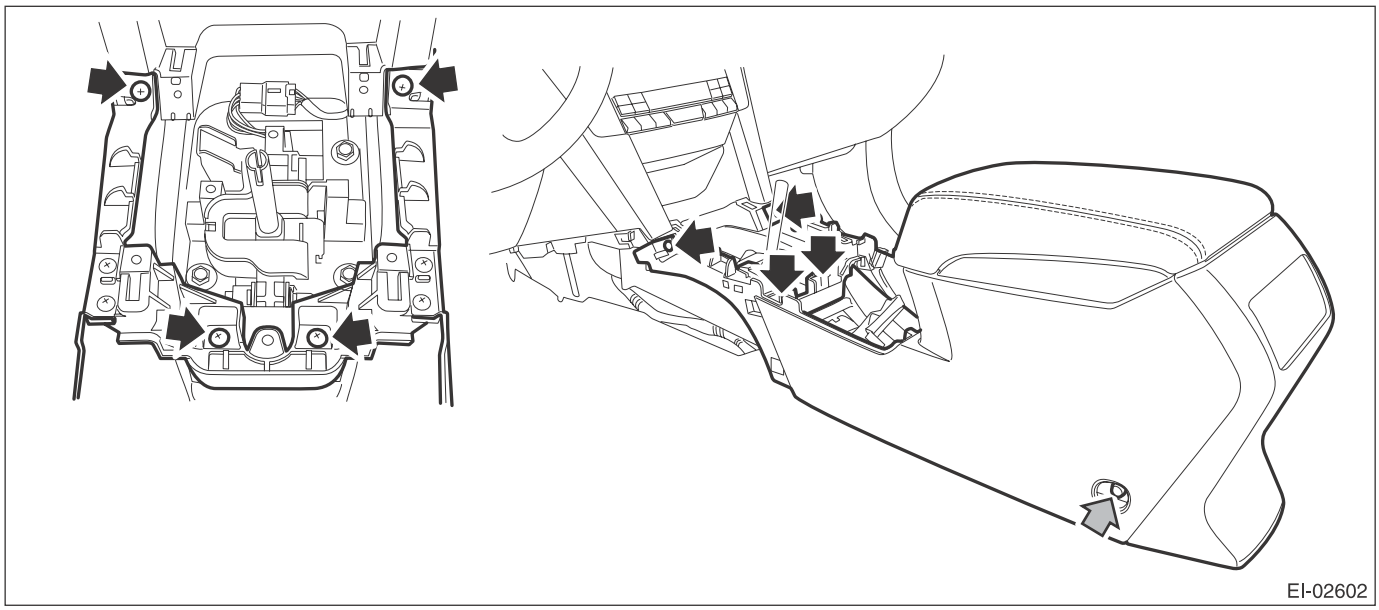

4) Remove the front accessory power supply socket.
(1) Remove the claws (two) in accessory power supply socket.
(2) Pull the accessory power supply socket out to remove.

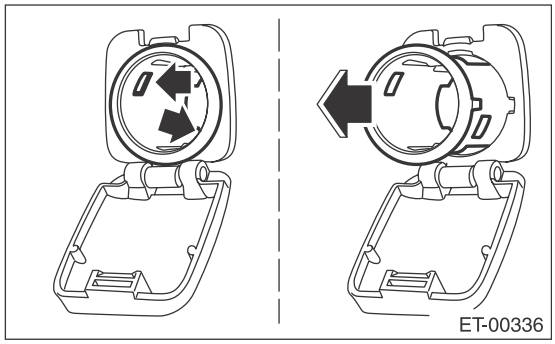

C: INSTALLATION

Install in the reverse order of removal.

Tightening torque:
Center console: 6.5 N·m (0.66 kgf-m, 4.8 ft-lb)

17.AUX Input Terminal

A: REMOVAL

1. AUX INPUT TERMINAL

1) Disconnect the ground cable from battery.
2) Remove the console front cover assembly.

- MT model
  1. Remove the shift knob.
  2. Release the clips and claws, then pull up the console front cover assembly.

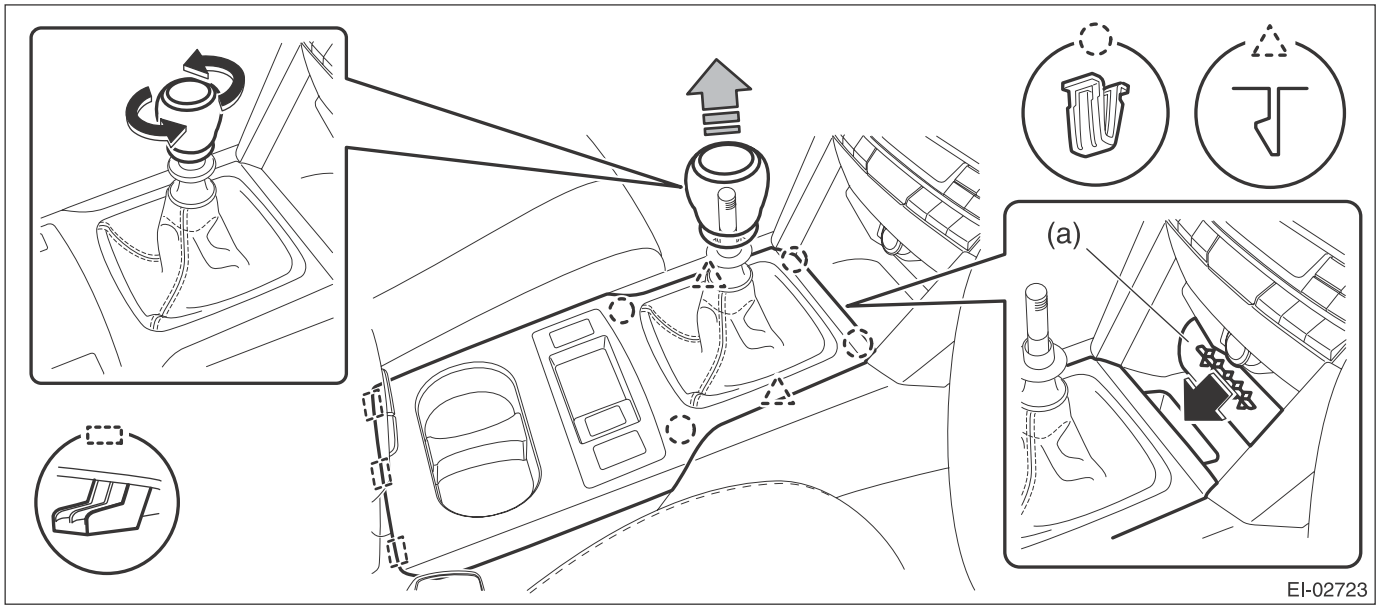

NOTE:
Turn over the front center pocket mat (a) and pull up the console front cover from the slit.

  3. Disconnect the harness connector and remove the console front cover assembly.

- AT/CVT model
  1. Remove the select lever knob.
     a. Lower the cover grip AT.
     b. Remove the clamp grip pin, then remove the select lever knob.
  2. Release the clips and claws, then pull up the console front cover assembly.

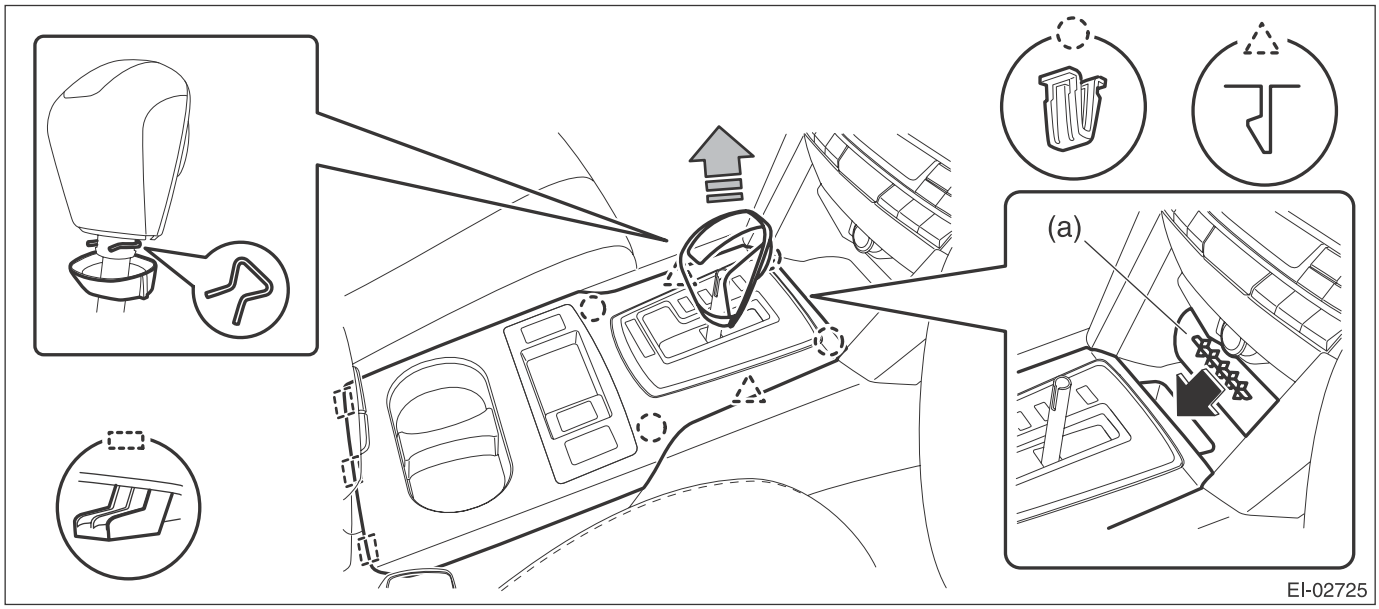

NOTE:
Turn over the front center pocket mat (a) and pull up the console front cover from the slit.

3. Disconnect the harness connector and remove the console front cover assembly.

3) Remove the console front side cover assembly.
(1) Remove the screws and release the clips (A) to (D) in order.
(2) Remove the console front side cover assembly by pulling it up.

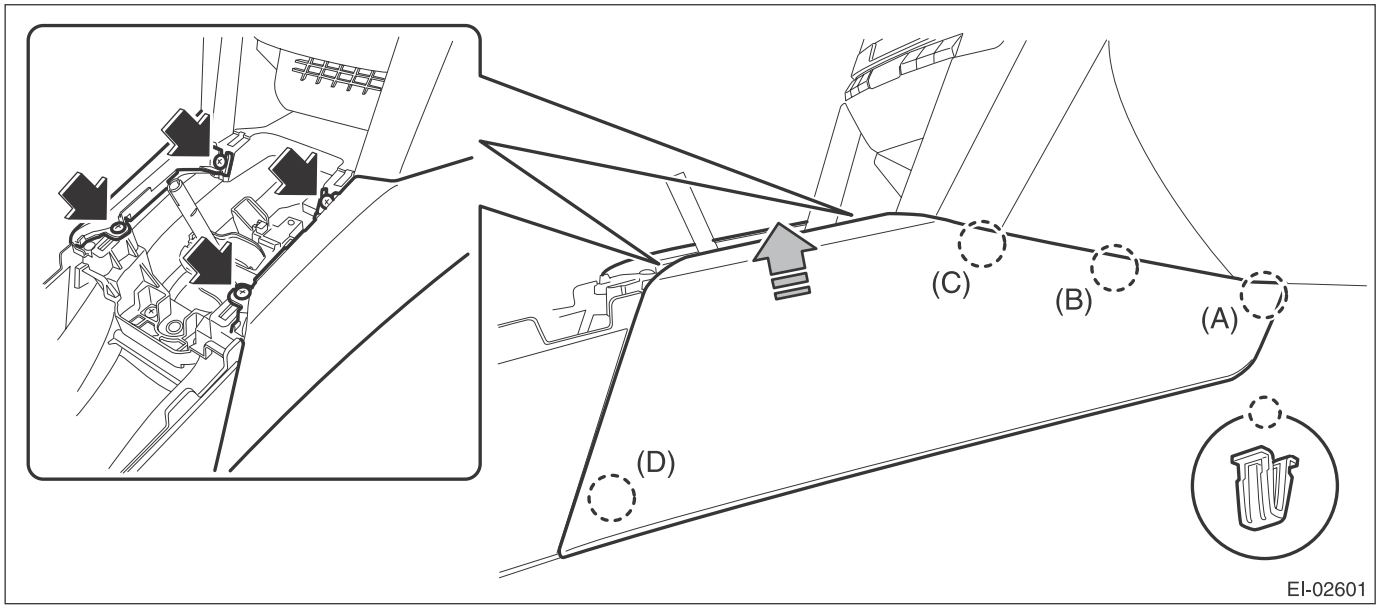

4) Remove the console box assembly.
(1) Move the seat forward, and remove the bolts after detaching the left and right caps.

NOTE:
For a model with power seat, connect the battery ground cable and move the seat. Then, disconnect the battery ground cable again and wait for 60 seconds at least before restarting the work.

(2) Remove the screws, disconnect the harness connector and remove the console box assembly.

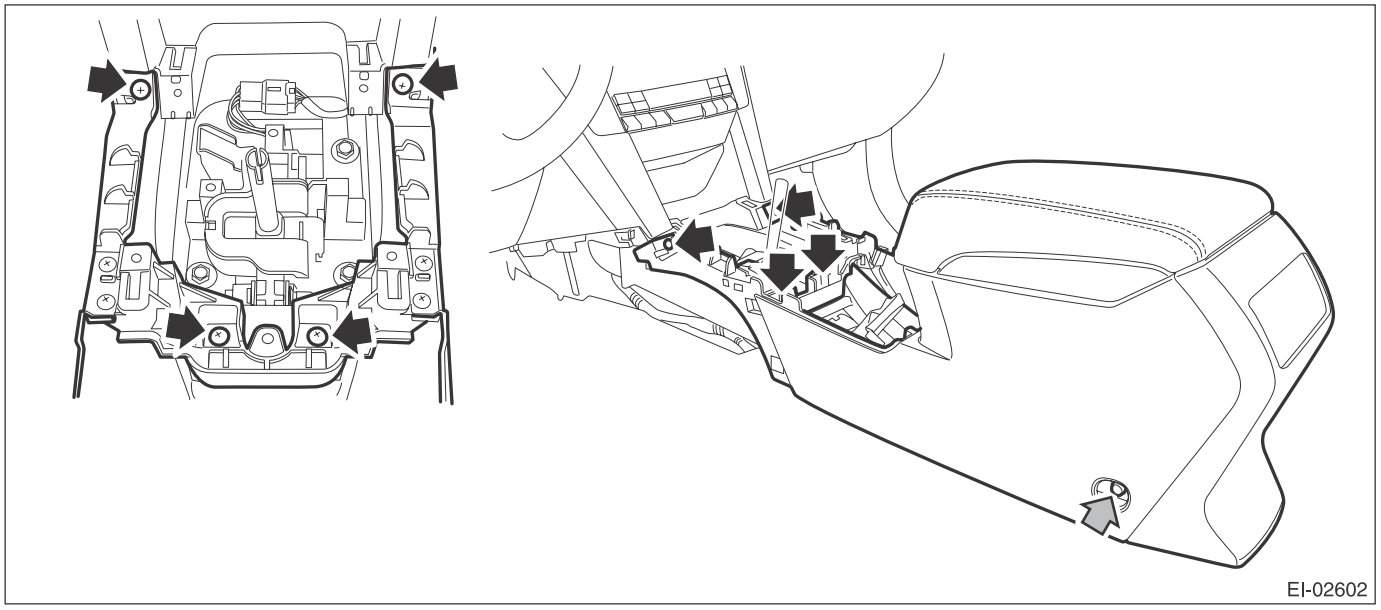

5) Remove the AUX input terminal.
(1) Remove the claws at four locations.

(2) Remove the AUX input terminal assembly by pushing it into the console box.

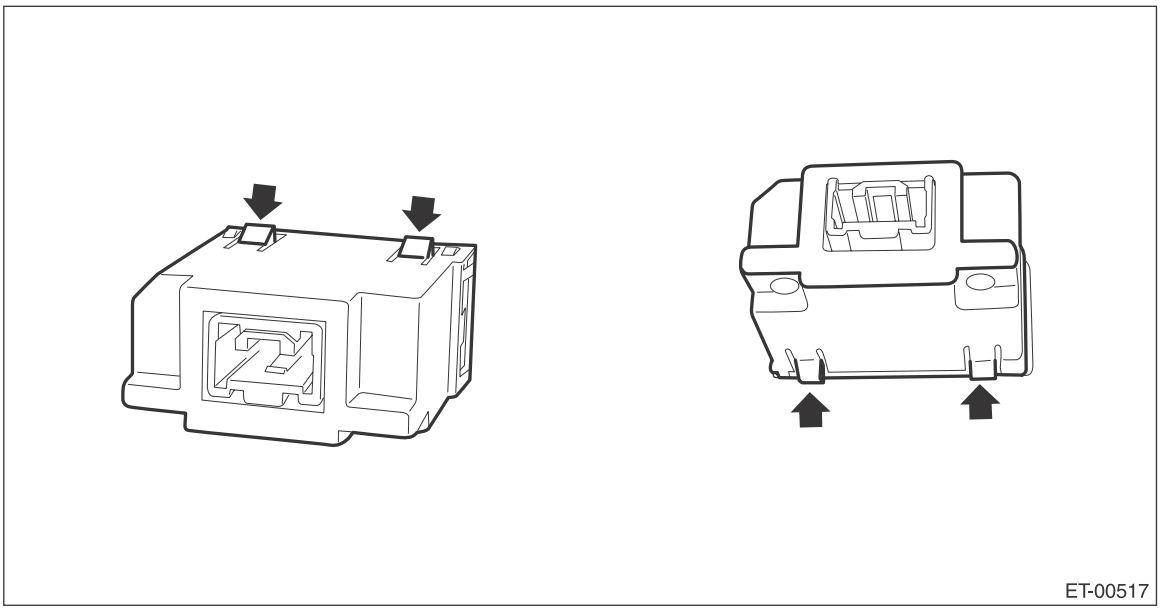

2. AUX TERMINAL HARNESS

1) Disconnect the ground cable from battery.
2) Remove the console front cover assembly.

- MT model
  1. Remove the shift knob.
  2. Release the clips and claws, then pull up the console front cover assembly.

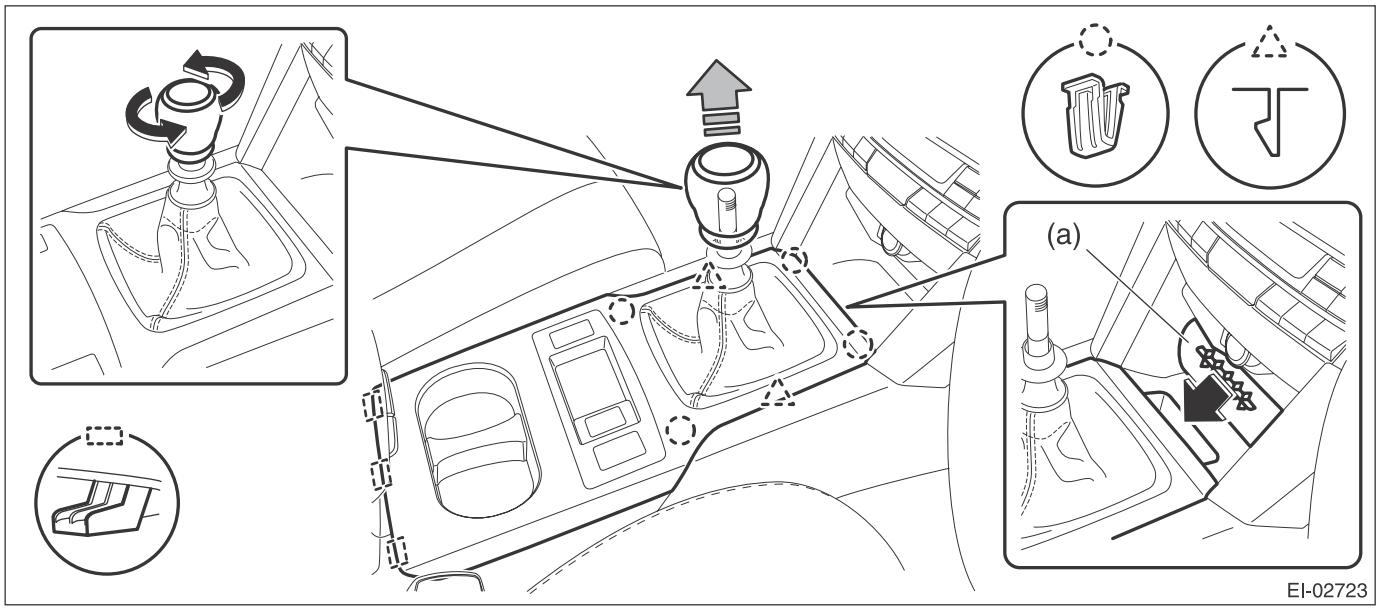

NOTE:
Turn over the front center pocket mat (a) and pull up the console front cover from the slit.

  3. Disconnect the harness connector and remove the console front cover assembly.

- AT/CVT model
  1. Remove the select lever knob.
     a. Lower the cover grip AT.
     b. Remove the clamp grip pin, then remove the select lever knob.

2. Release the clips and claws, then pull up the console front cover assembly.

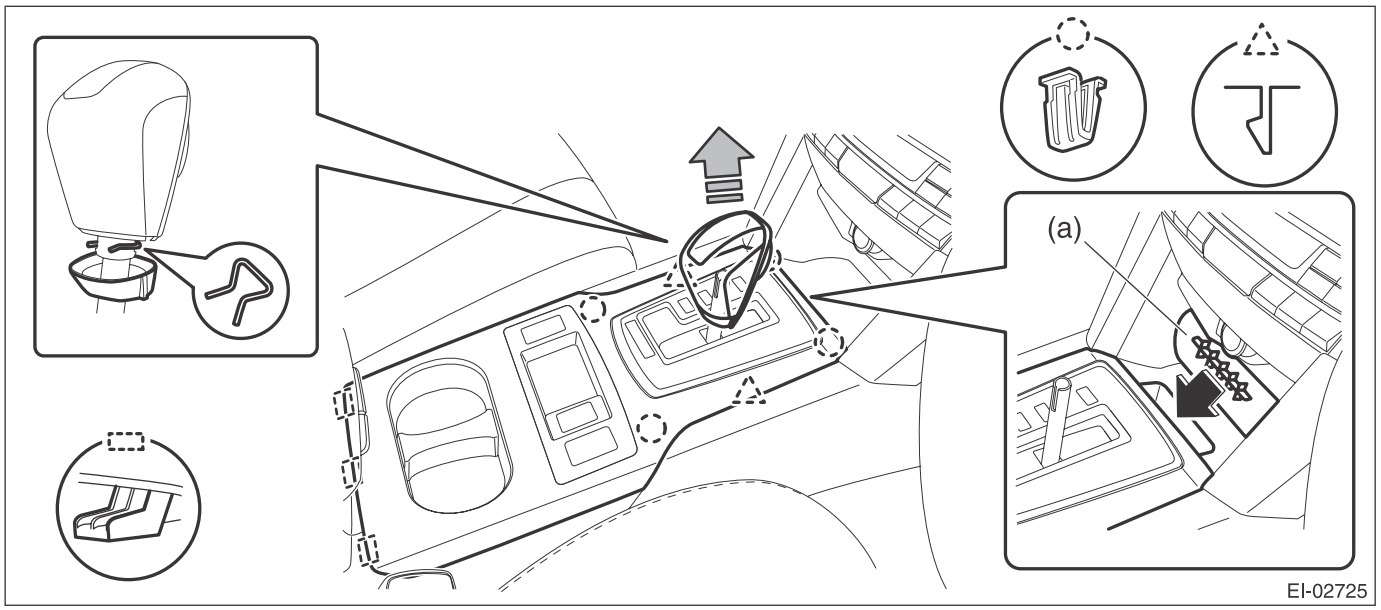

NOTE:
Turn over the front center pocket mat (a) and pull up the console front cover from the slit.

3. Disconnect the harness connector and remove the console front cover assembly.

3) Remove the console front side cover assembly LH.
(1) Remove the screws and release the clips (A) to (D) in order.
(2) Remove the console front side cover assembly by pulling it up.

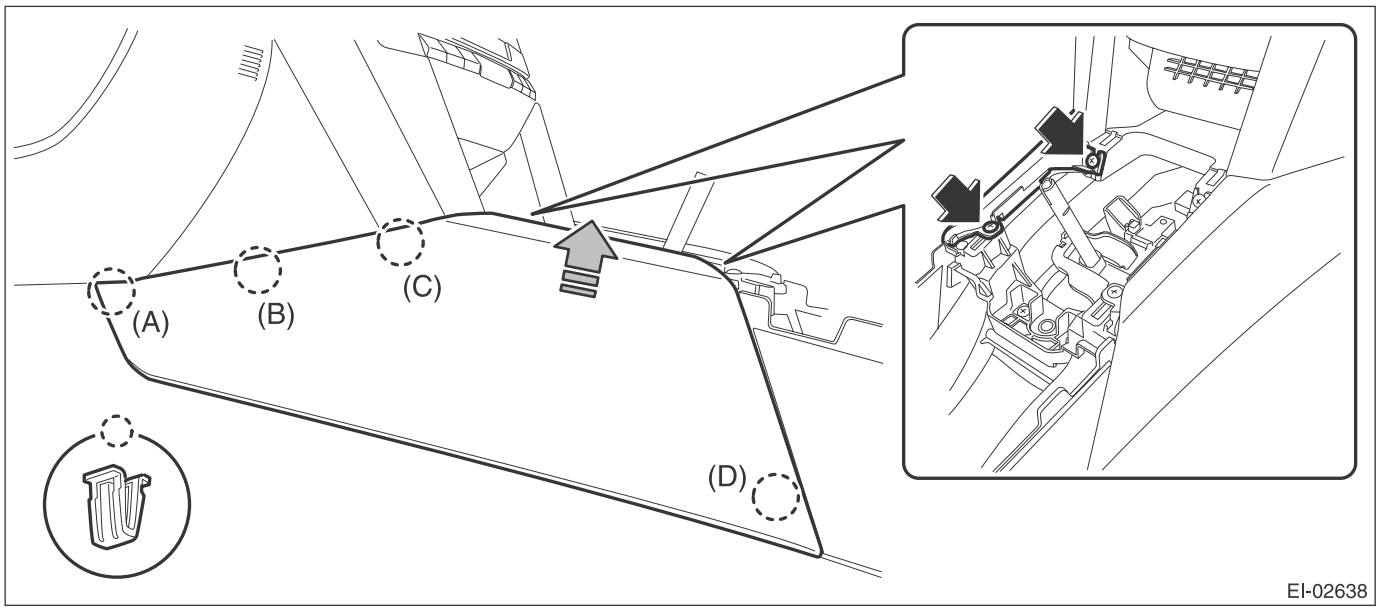

4) Remove the center panel assembly.

CAUTION:
Do not put your finger on the fin of the air vent grille. Doing so may damage the fin.

(1) Attach the protective tape (a) to the meter visor.

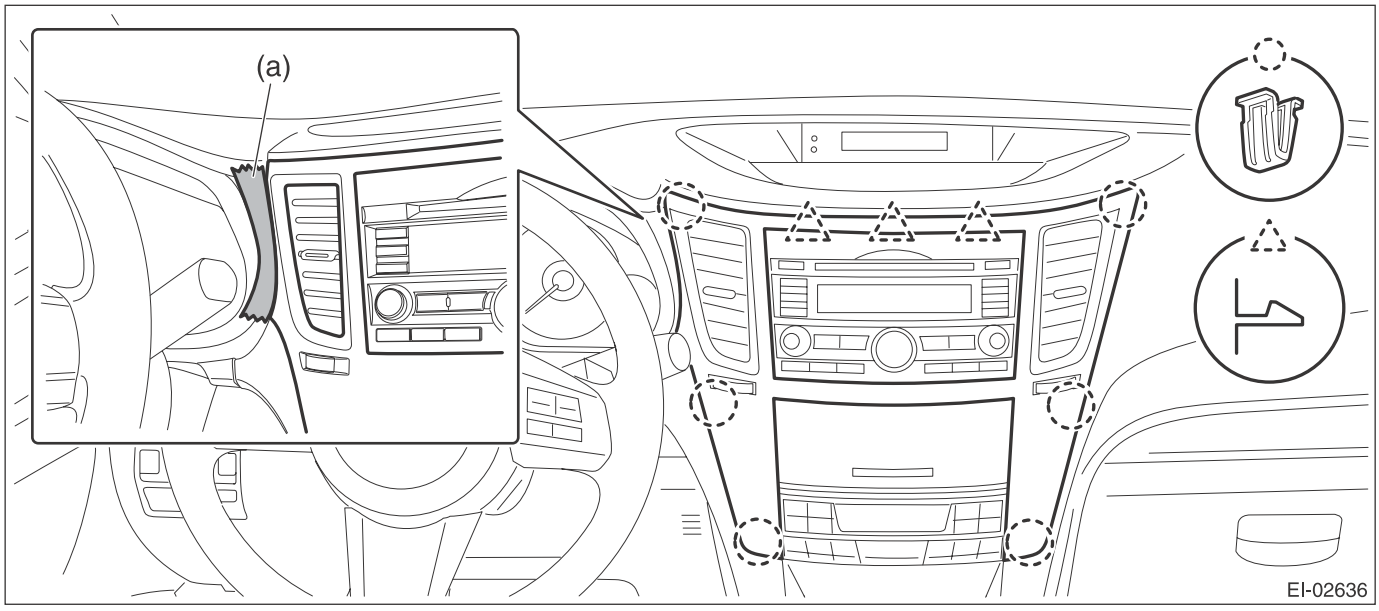

(2) Insert a finger into the air vent grille and release the left and right clips at the top of the center panel. (A), (B)
(3) Insert a finger into the air vent grille and release the left and right clips at the center of the center panel. (C), (D)
(4) Release the clips at the bottom of the center panel and remove the center panel assembly.

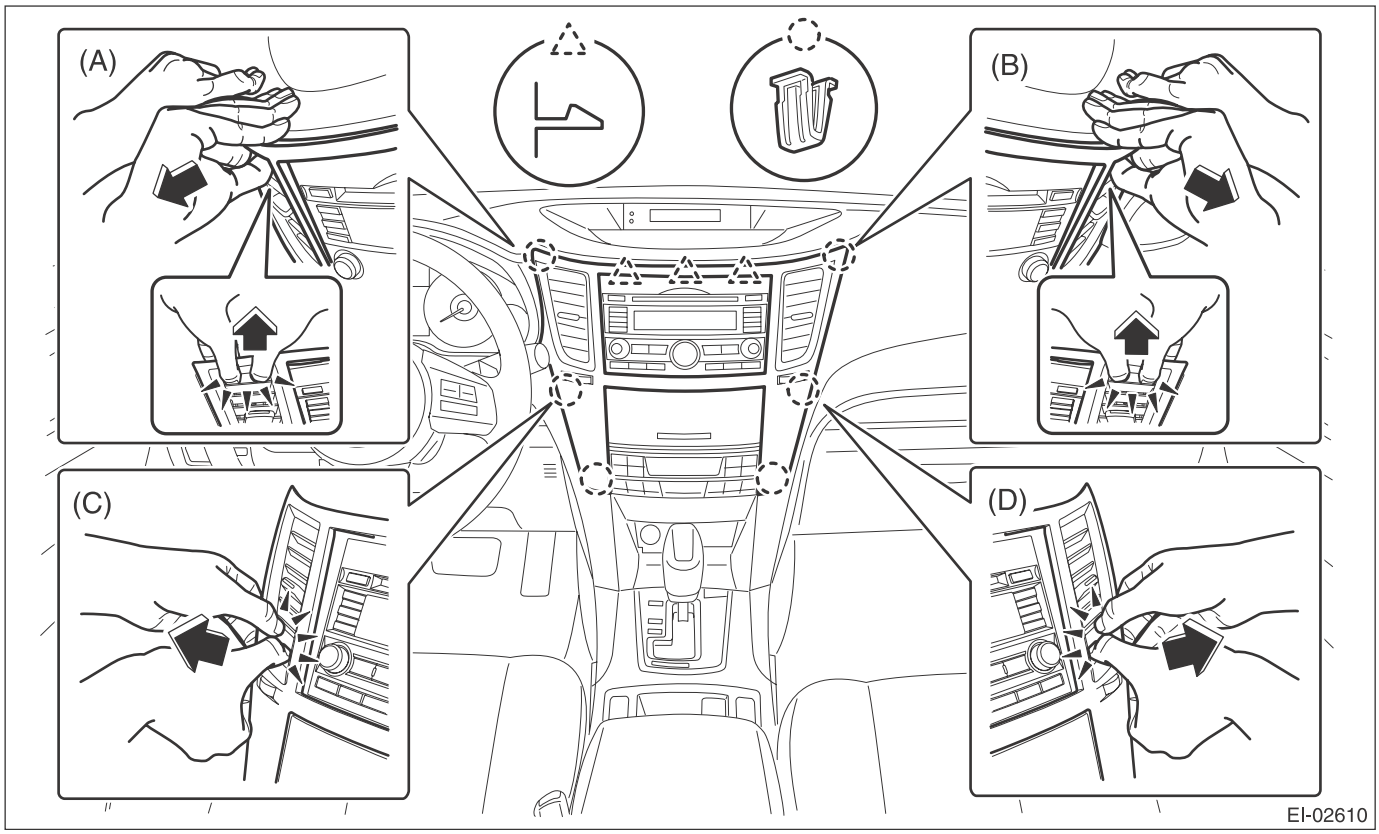

5) Remove the audio assembly.
(1) Remove the left and right screws, and partially pull the audio out from center console.

(2) Disconnect the connectors, and remove the audio assembly.

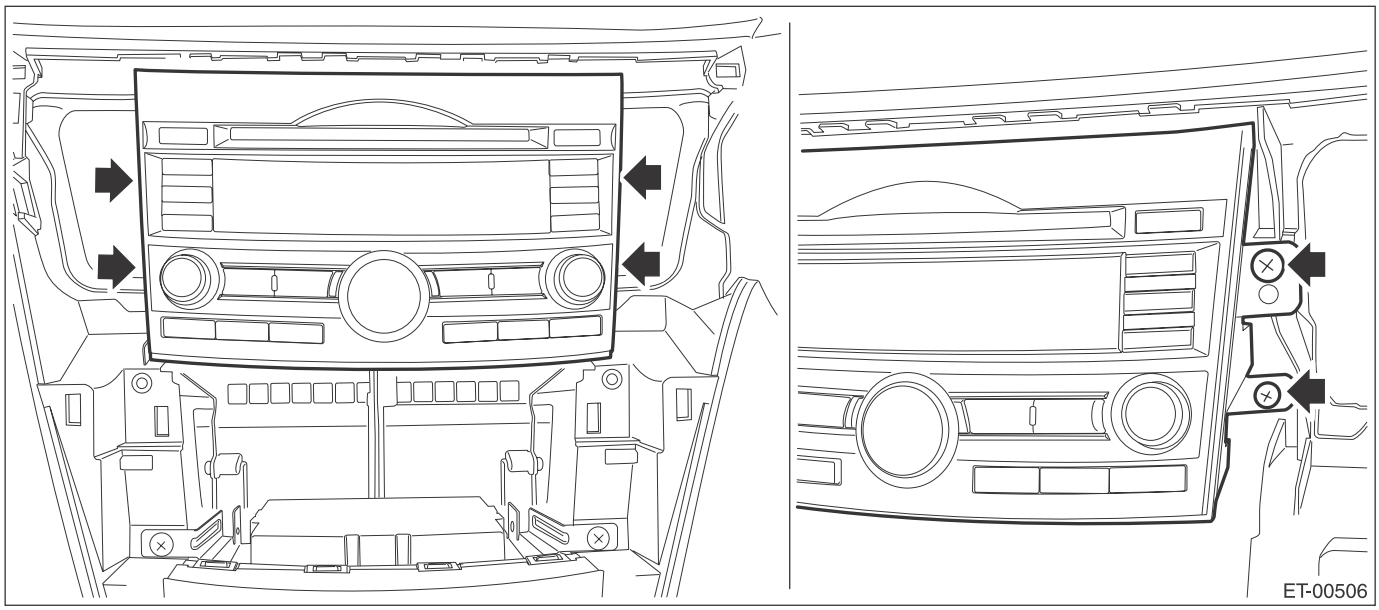

6) Remove the navigation assembly. (model with navigation)
(1) Remove the left and right screws.
(2) Disconnect the connectors, and remove the navigation assembly.

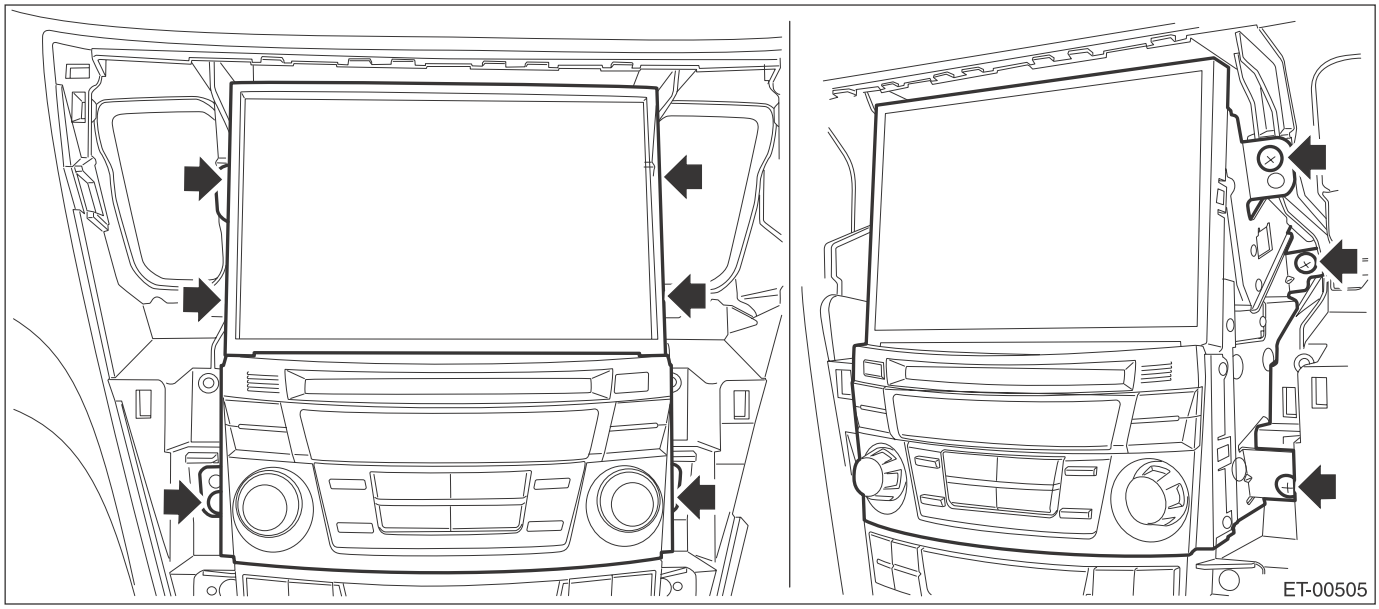

7) Remove the AUX terminal harness.
(1) Remove the harness clamp.

(2) Disconnect the connector from the AUX input terminal assembly, and remove the AUX terminal harness.

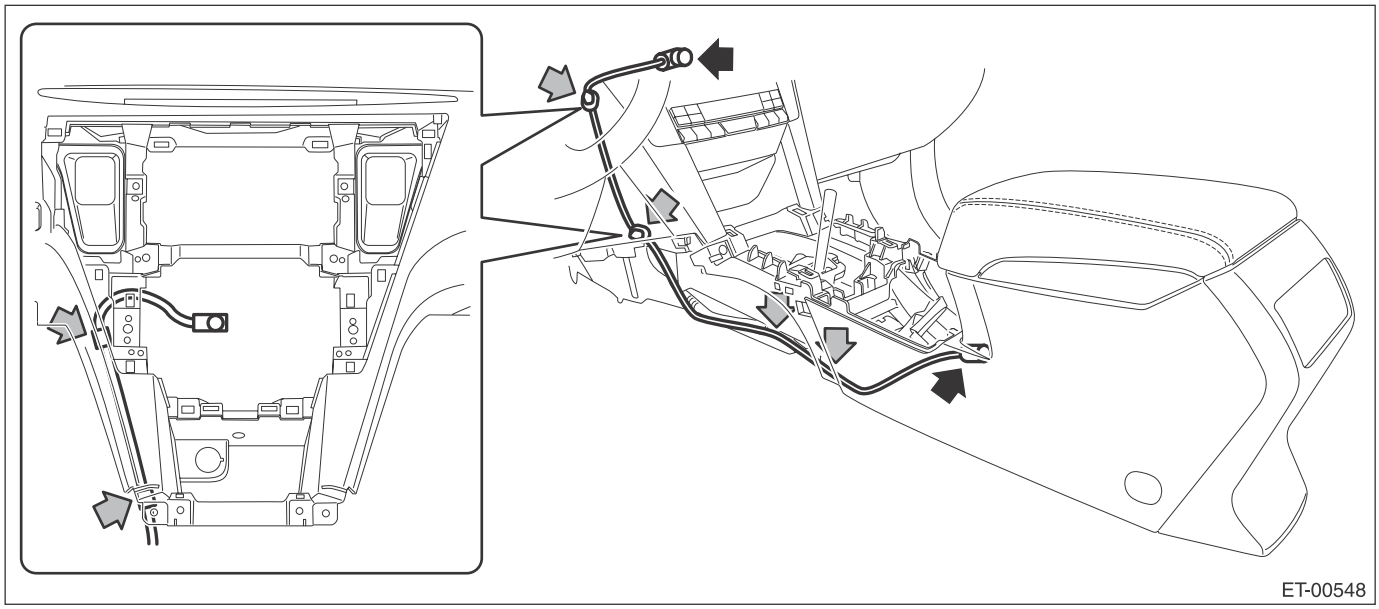

B: INSTALLATION

Install each part in the reverse order of removal.

Tightening torque:
Center console: 6.5 N·m (0.66 kgf-m, 4.8 ft-lb)

COMMUNICATION SYSTEM

COM

Page

1. General Description 2
2. Relay and Fuse 3
3. Horn System 4
4. Horn 5
5. Horn Switch 11

1. General Description

A: COMPONENT

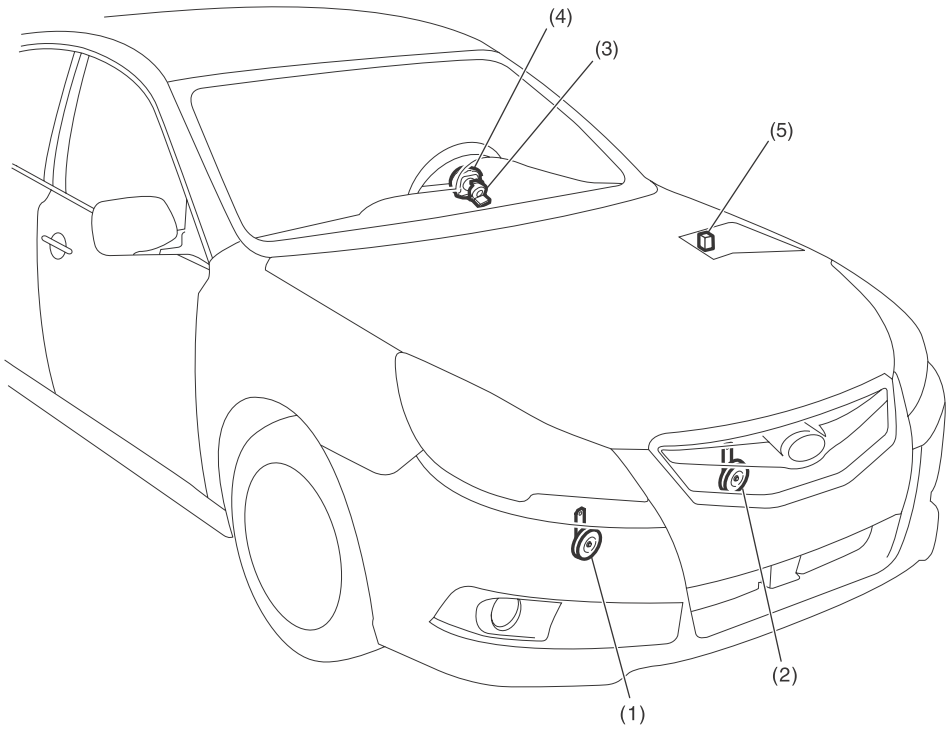

(1) Hi pitch side horn
(2) Lo pitch side horn
(3) Roll connector
(4) Horn switch (driver's airbag module ASSY)
(5) HORN RELAY

B: CAUTION

• Before disassembling or reassembling parts, always disconnect the battery ground cable from battery. When replacing the control module and other parts provided with memory functions, record the memory contents before disconnecting the battery ground cable. Otherwise, the memory is cleared.
• Reassemble the parts in the reverse order of disassembly procedure unless otherwise indicated.
• Connect the connectors securely when reassembling.
• After reassembly, make sure that the functional parts operate normally.

C: PREPARATION TOOL

1. GENERAL TOOL

TOOL NAME	REMARKS
Circuit tester	Used for measuring resistance and voltage.
TORX® T30	Used for removing/installing driver's airbag module.

2. Relay and Fuse

A: LOCATION

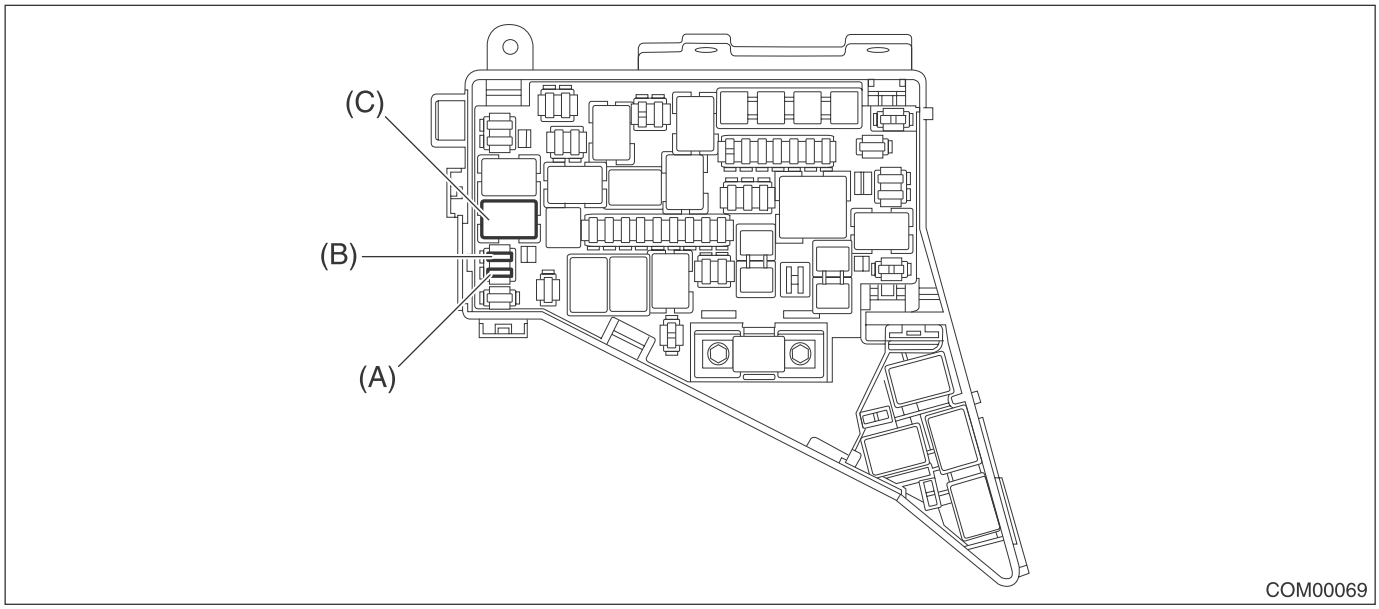

Main Fuse Box	Fuse 7.5 A (Hi pitch side horn)	(A)
	Fuse 7.5 A (Lo pitch side horn)	(B)
	HORN RELAY	(C)

B: INSPECTION

1. CHECK FUSE.

1) Remove the fuse and check visually.
2) If the fuse is blown out, replace the fuse.

2. CHECK RELAY

1) Check the resistance between relay terminals.

Terminal No.	Inspection conditions	Specification	Circuit
1 — 2	Always	1 MΩ or more	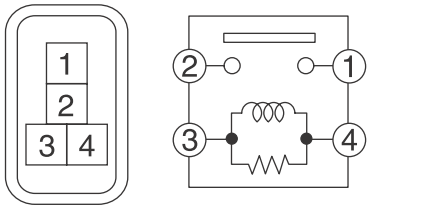 SR-00180
1 — 2	Apply battery voltage to the terminals between 4 — 3.	Less than 1 Ω	

2) Replace the relay if it is found defective.

3. Horn System

A: WIRING DIAGRAM

Refer to “Horn System” in the wiring diagram. <Ref. to WI-157, WIRING DIAGRAM, Horn System.>

B: INSPECTION

Symptoms	Inspection steps
Horn does not sound.	1. Check the fuse.
	2. Check the horn relay.
	3. Check the roll connector.
	4. Check the horn switch.
	5. Check the horn assembly.
	6. Check the harness.

C: NOTE

For operation procedures of each component of the horn system, refer to the respective section.

- Horn ASSY:<Ref. to COM-5, Horn.>
- Horn switch:<Ref. to COM-11, Horn Switch.>

4. Horn

A: REMOVAL

1) Disconnect the ground cable from battery.
2) Remove the bumper face assembly.
   (1) Remove the clips, turn over the front mud guard, and disconnect the fog light connector. (Model with fog light)

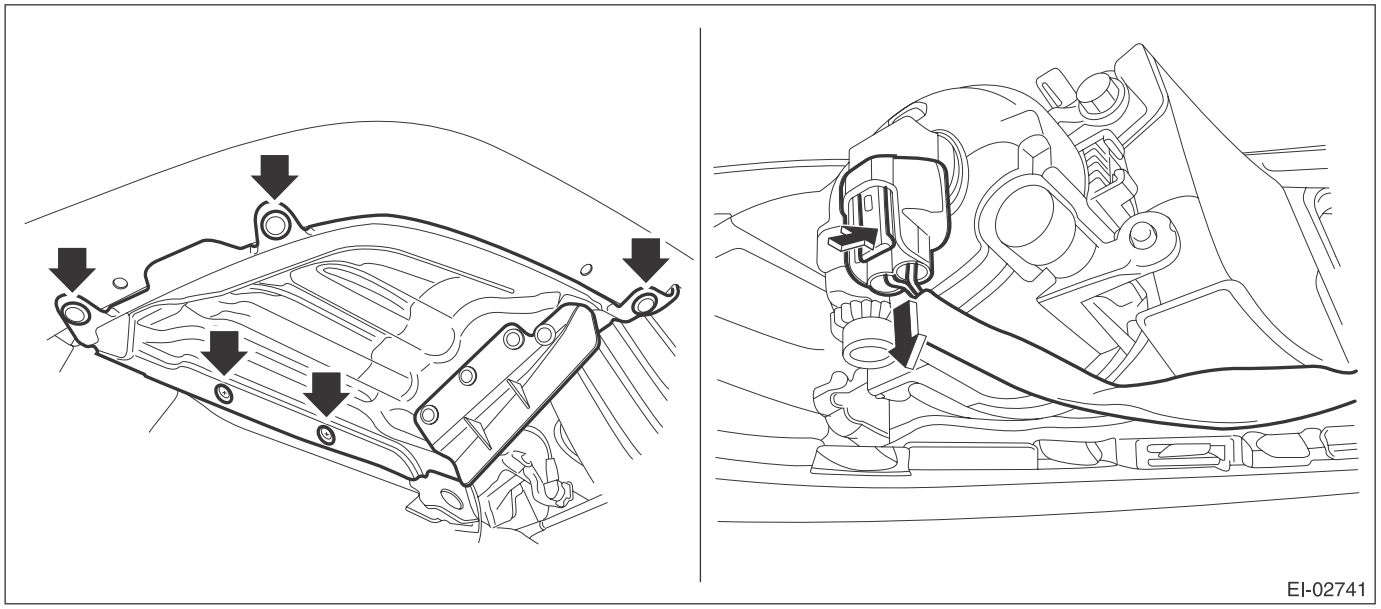

   (2) Remove the clips at the upper side of the bumper.
   (3) Remove the clips from the fender.

(4) Remove the clips at the lower side of bumper.

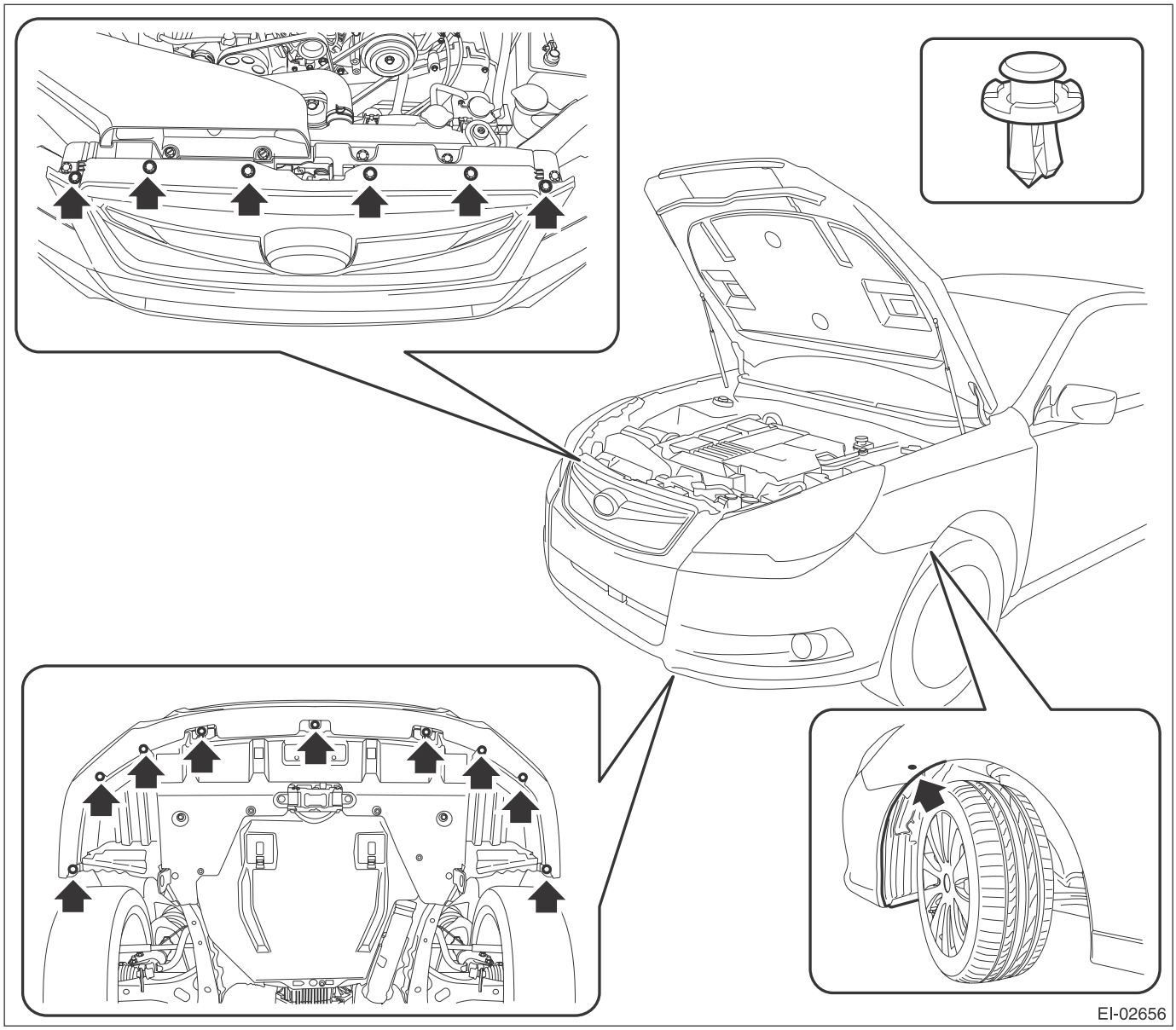

(5) Detach the flange section on the bumper face side from the bracket side front UPR.

CAUTION:
Do not pull forcibly. Doing so may damage the flange sections on the bumper face side.

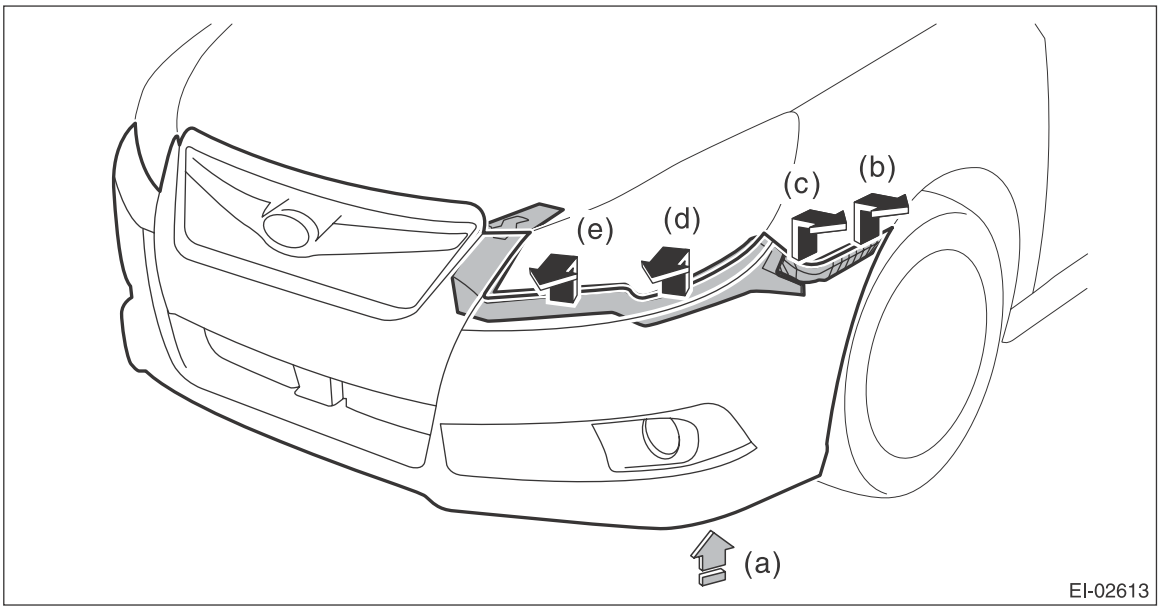

NOTE:
While pushing upward with the underside (a) of the fog light, remove (b) to (e) in order.
Detach the opposite side in the same manner.
3) Remove the clips and remove the air intake duct.

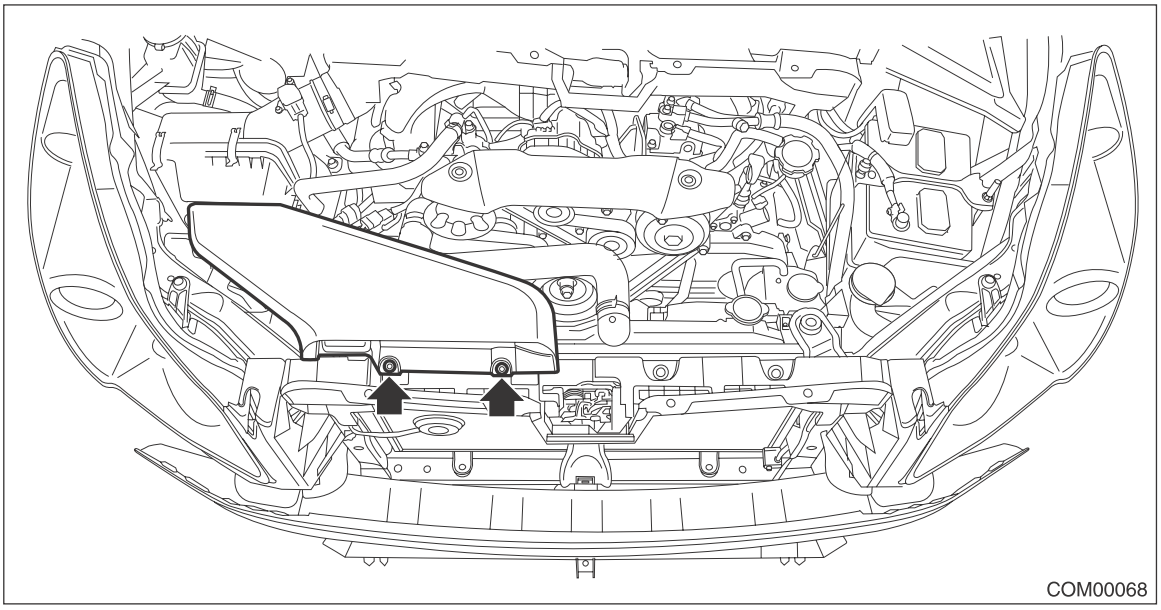

4) Remove the clips and remove the grille bracket.

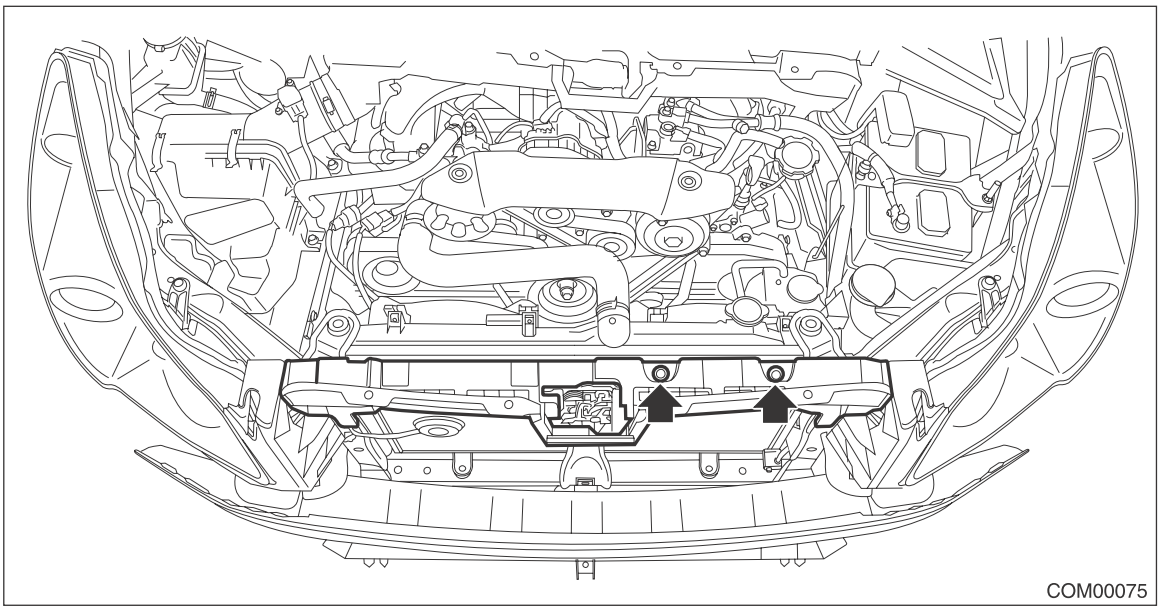

5) Remove the Lo pitch side horn.
   (1) Disconnect the connector.
   (2) Remove the horn bracket mounting bolt and remove the Lo pitch side horn.

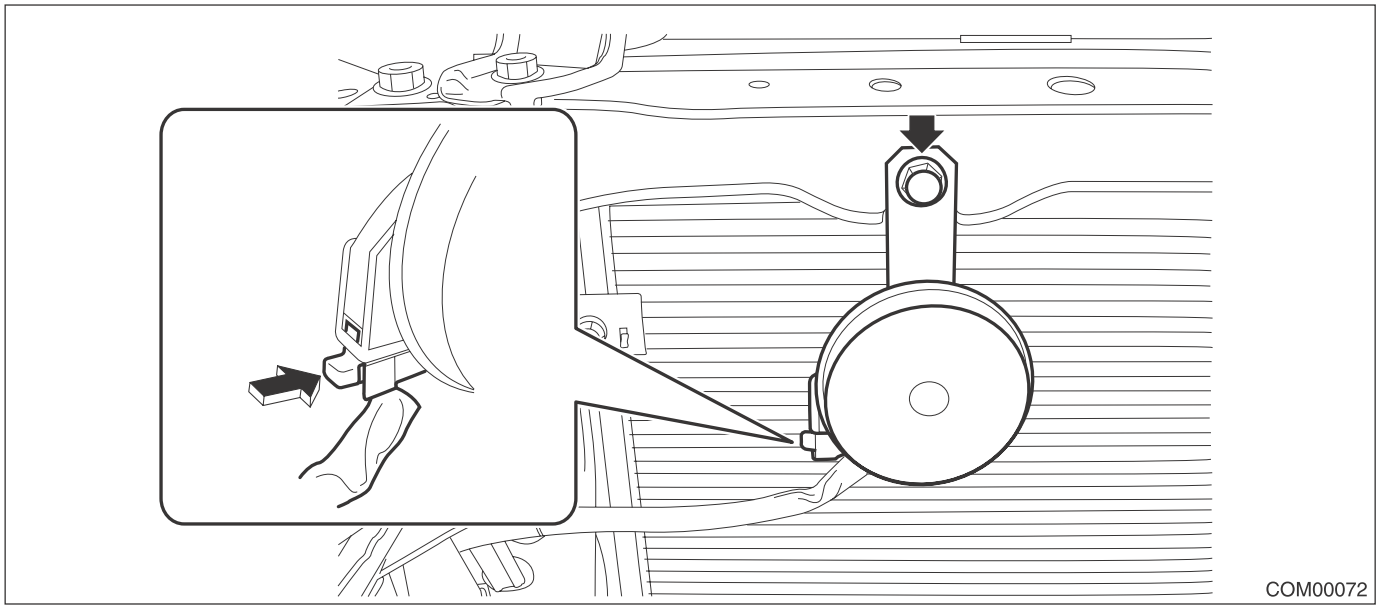

6) Remove the Hi pitch side horn.
   (1) Disconnect the connector.

(2) Remove the horn bracket mounting bolt and remove the Hi pitch side horn.

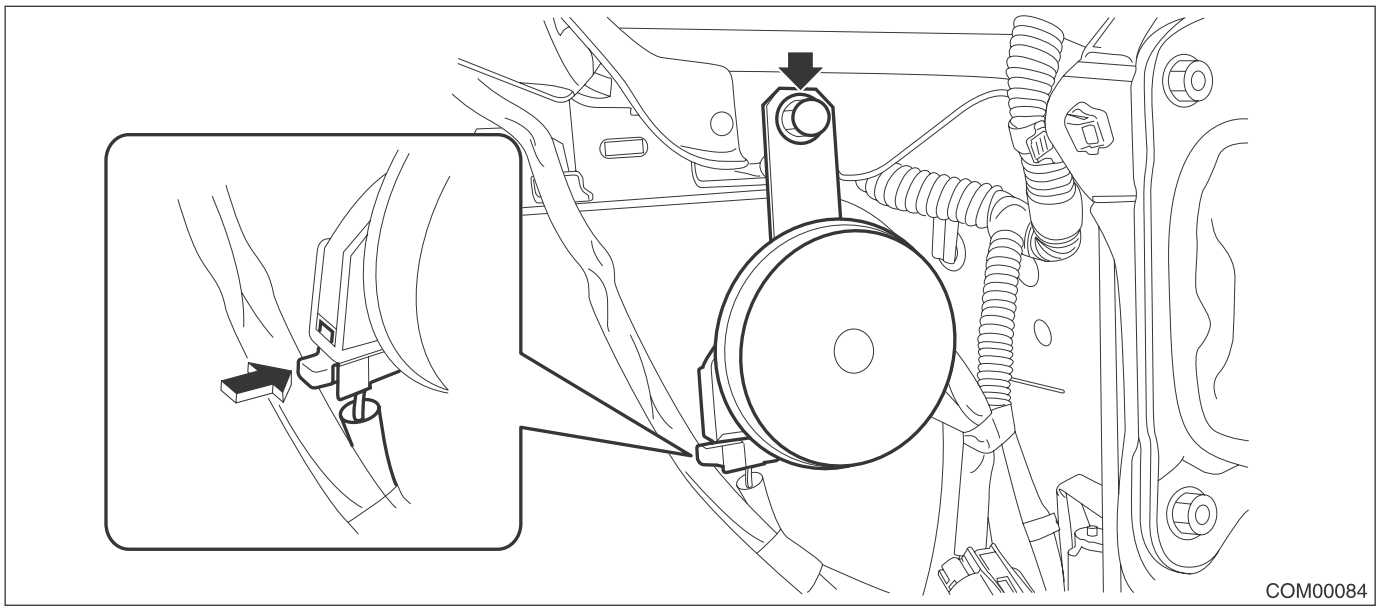

B: INSTALLATION

Install each part in the reverse order of removal.

CAUTION:
Install the bumper face so that the under cover front end (b) comes inside the front bumper face (a).

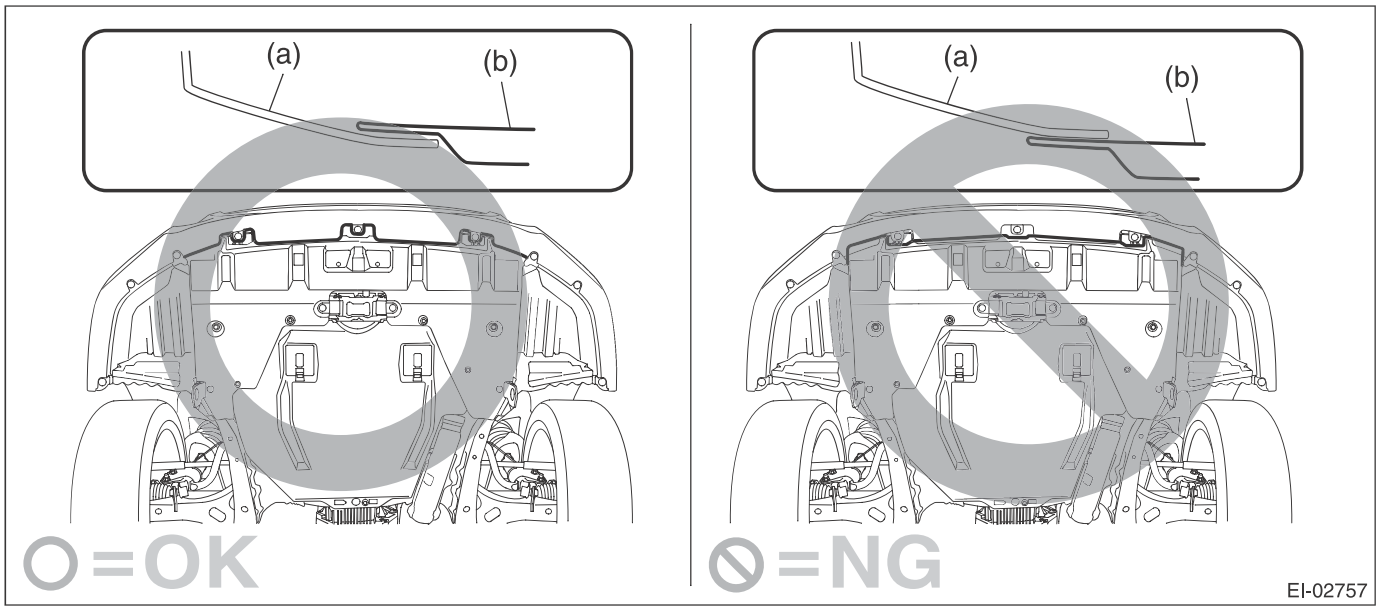

Tightening torque:
Horn assembly: 18 N·m (1.84 kgf-m, 13.3 ft-lb)

C: INSPECTION

1. CHECK HORN ASSEMBLY.

1) Remove the horn assembly (Hi pitch side and Lo pitch side). <Ref. to COM-5, REMOVAL, Horn.>
2) Check the horn sounds when applying the battery voltage to the horn assembly.

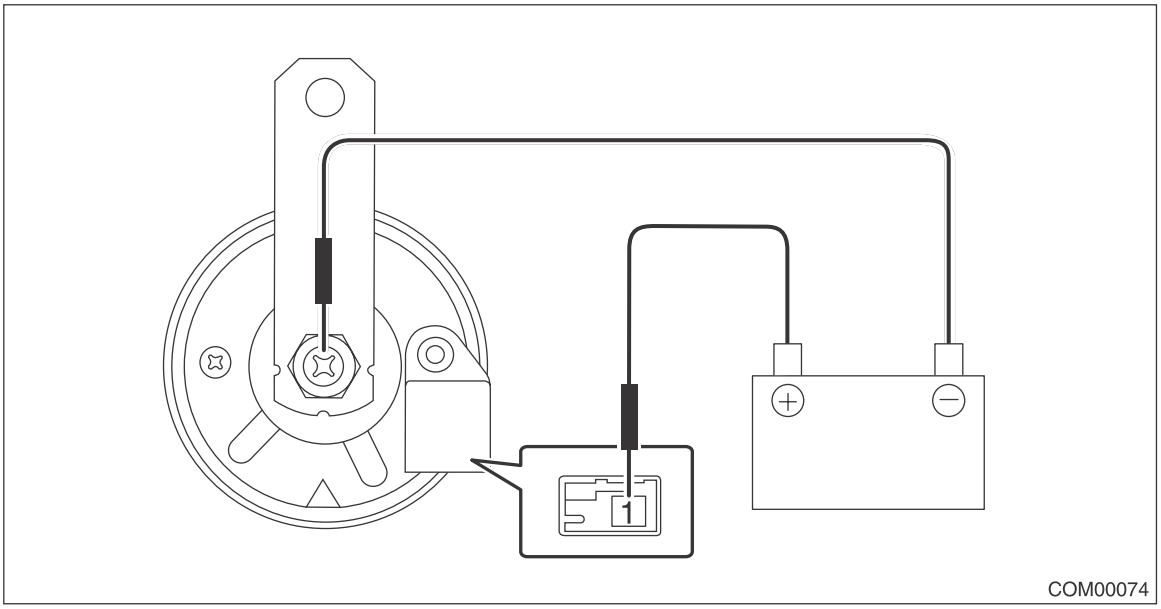

Terminal No.	Inspection conditions	Specification
1 (+) — horn case (–)	Connect battery to the terminals	Sound

3) If it does not operate normally by the inspection, replace the horn assembly.

5. Horn Switch

A: REMOVAL

CAUTION:
Refer to "CAUTION" of "General Description" before handling the airbag module. <Ref. to AB-9, CAUTION, General Description.>

NOTE:
Horn switch is a unit with the driver's airbag module.
1) Position the front wheels straight ahead. (After moving a vehicle 5 m (16 ft) or more with front wheels positioned straight ahead, make sure that the vehicle moves straight ahead.)
2) Turn the ignition switch to OFF.
3) Disconnect the ground cable from battery and wait for at least 60 seconds before starting work.
4) Remove the driver's airbag module assembly.

Preparation tool: TORX® T30

(1) Loosen the TORX® bolts located on the sides of the steering wheel.

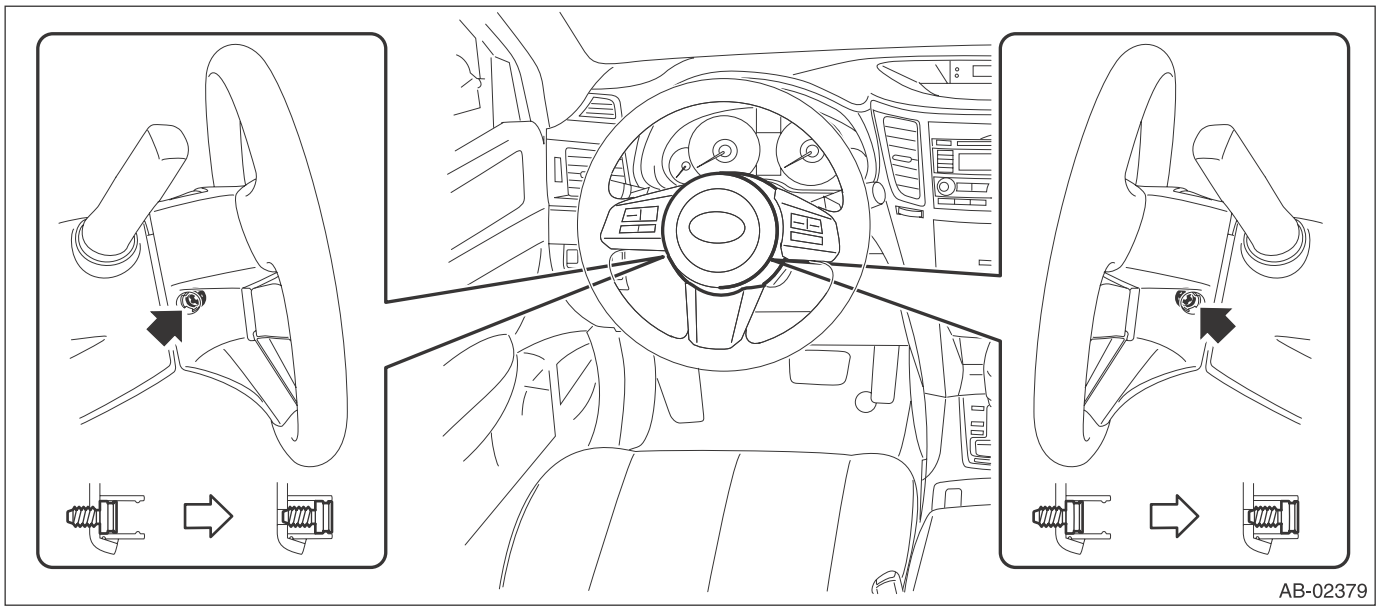

(2) Disconnect the horn harness and airbag connector and remove the airbag module assembly.

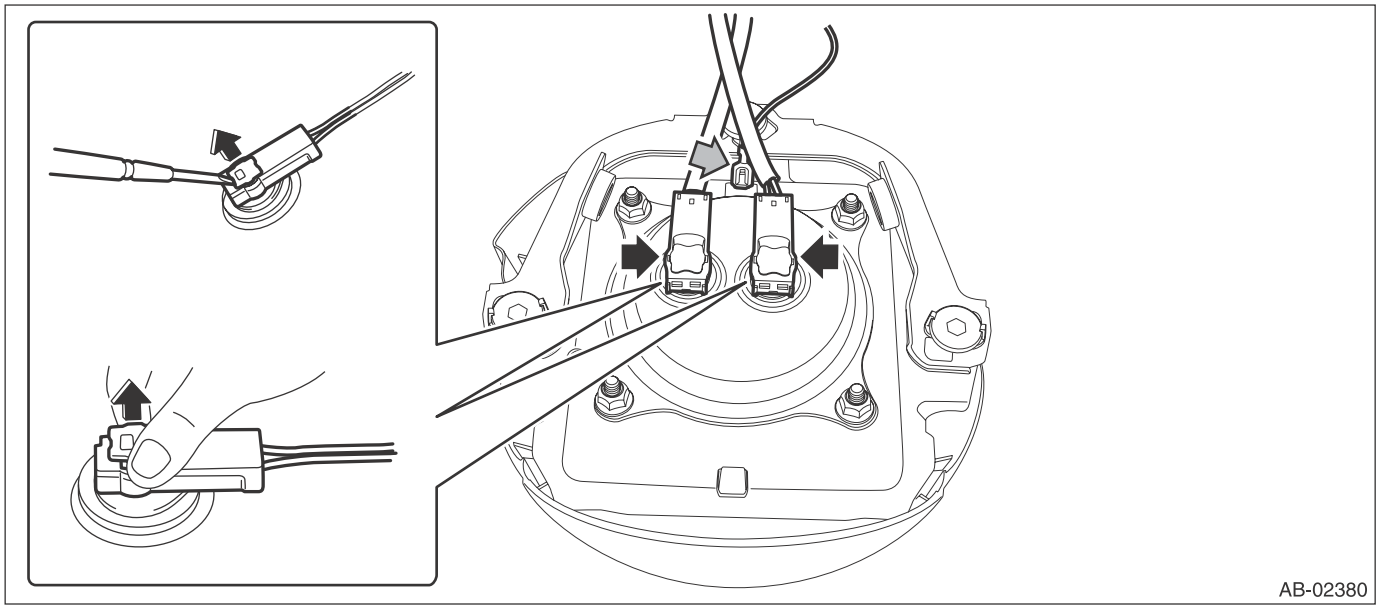

B: INSTALLATION

CAUTION:
• Refer to "CAUTION" of "General Description" before handling the airbag module. <Ref. to AB-9, CAUTION, General Description.>
• Do not allow harness and connectors to interfere or get tangled up with other parts.
1) Install the driver's airbag module. <Ref. to AB-32, INSTALLATION, Driver's Airbag Module.>
2) Install each part in the reverse order of removal.

Tightening torque:
Driver's airbag module: 10 N·m (1.02 kgf-m, 7.4 ft-lb)

C: INSPECTION

1. CHECK HORN SWITCH.

1) Remove the horn switch. <Ref. to COM-11, REMOVAL, Horn Switch.>
2) Measure the resistance between horn switch terminal and airbag module bracket.

Preparation tool: Circuit tester

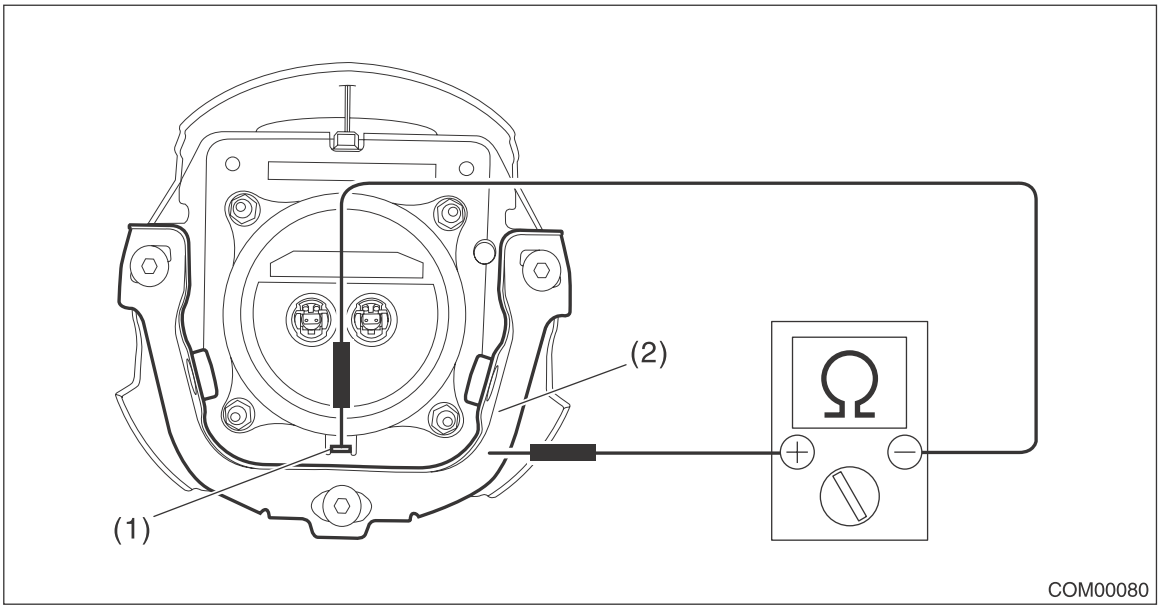

(1) Horn switch terminal (2) Airbag module bracket

Terminal No.	Inspection conditions	Specification
Horn switch terminal — airbag module bracket	The airbag module bracket being pushed	Less than 1 Ω
	The airbag module bracket being separated	1 MΩ or more

3) If it is out of the standard value by the inspection, replace the driver's airbag module.

2. CHECK ROLL CONNECTOR.

1) Remove the roll connector. <Ref. to AB-89, REMOVAL, Roll Connector.>
2) Measure the resistance between roll connector terminals.

Preparation tool: Circuit tester

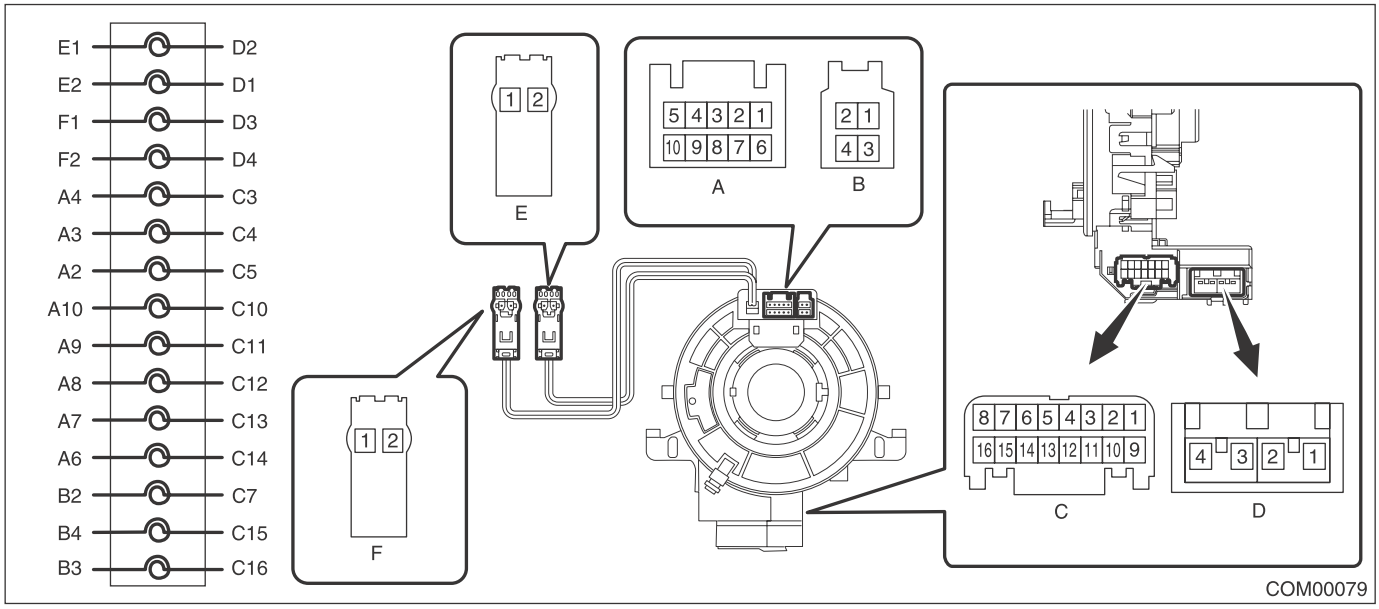

Terminal No.	Inspection conditions	Specification
A10 — C10	Always	Less than 1 Ω

3) If it is out of the standard value by the inspection, replace the roll connector.

GLASS/WINDOWS/MIRRORS

GW

		Page
1.	General Description	2
2.	Relay and Fuse	8
3.	Power Window System	9
4.	Power Window Control Switch	11
5.	Front Door Glass	16
6.	Front Regulator and Motor Assembly	18
7.	Remote Control Mirror System	20
8.	Scalp Cap	21
9.	Outer Mirror Assembly	25
10.	Outer Mirror	27
11.	Remote Control Mirror Switch	29
12.	Rear Door Glass	32
13.	Rear Regulator and Motor Assembly	34
14.	Windshield Glass	36
15.	Rear Gate Glass	44
16.	Rear Window Glass	48
17.	Rear Window Defogger System	51
18.	Rear Quarter Glass	53
19.	Rearview Mirror	55
20.	Wiper Deicer System	56

1. General Description

A: COMPONENT

1. FIXED GLASS (SEDAN MODEL)

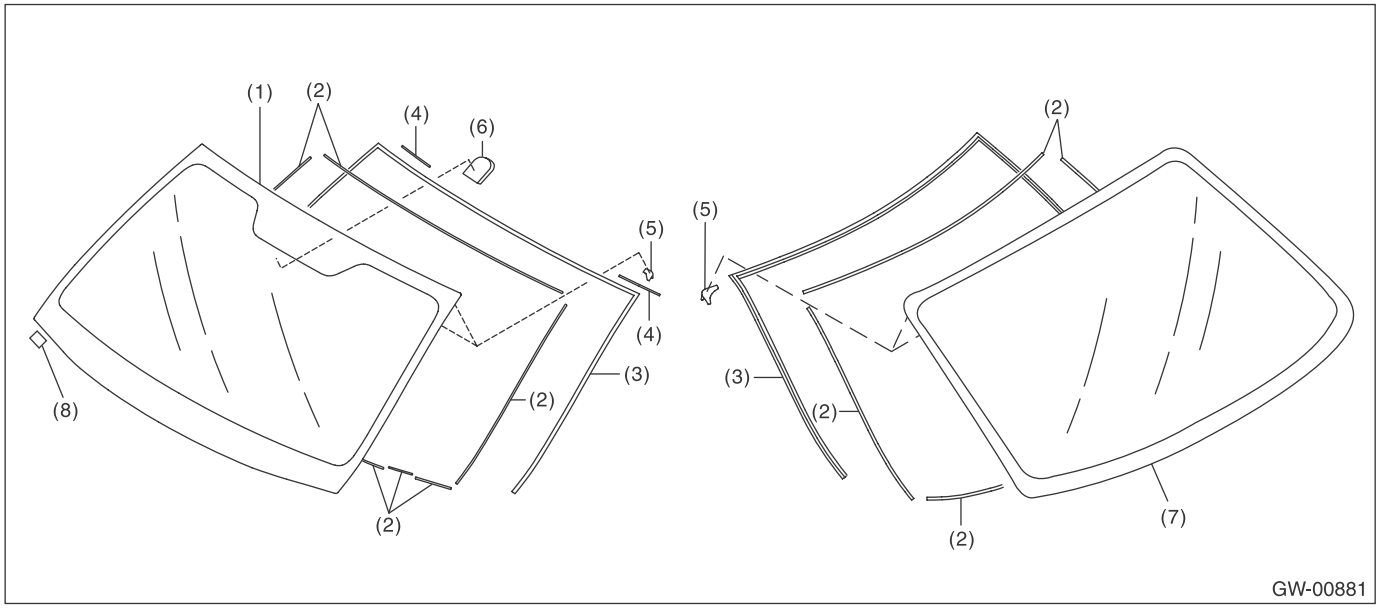

(1) Windshield glass
(2) Dam rubber
(3) Molding
(4) Seal upper side
(5) Locating pin
(6) Rearview mirror mount
(7) Rear window glass
(8) Seal A

2. FIXED GLASS (OUTBACK MODEL)

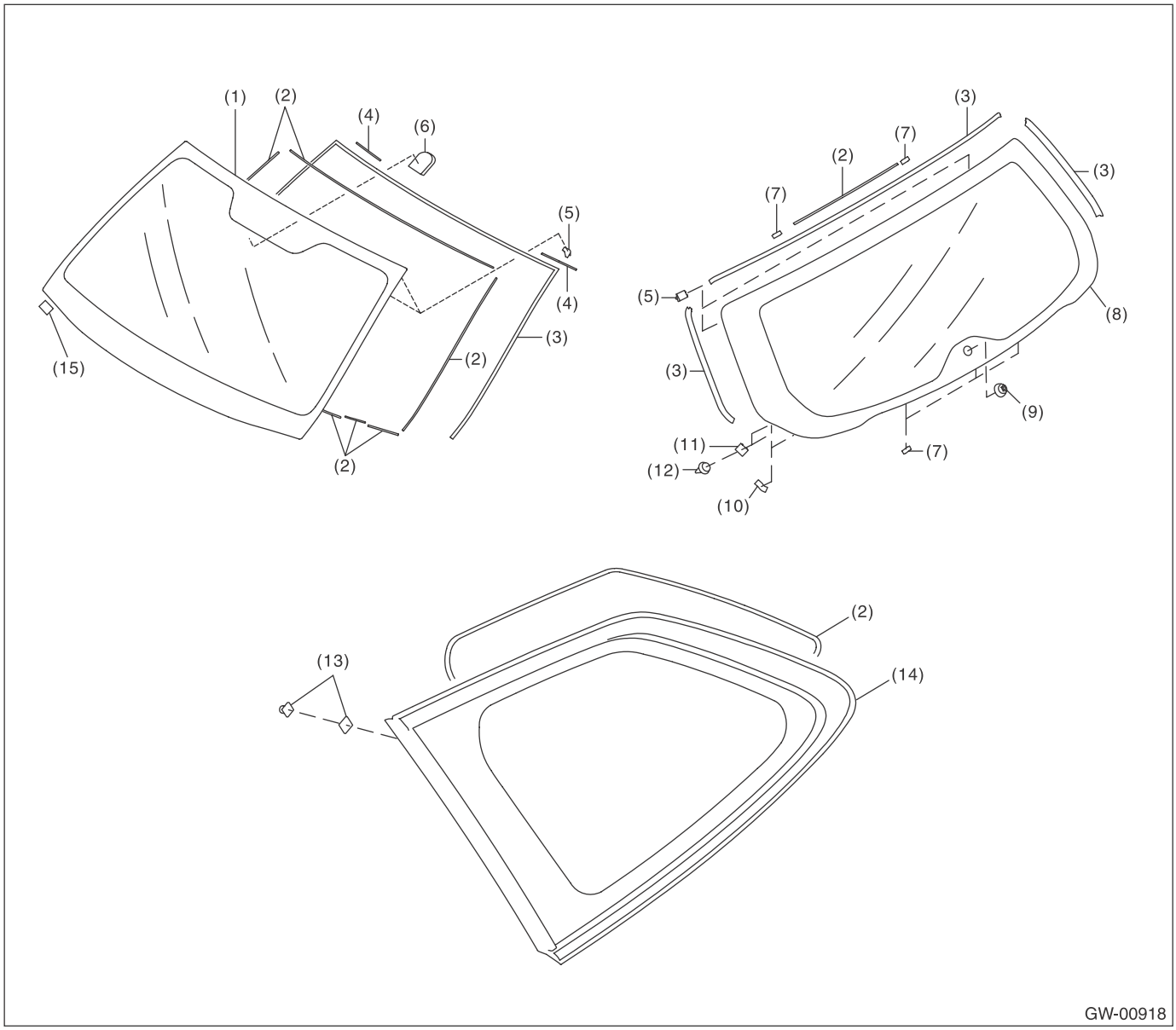

(1)	Windshield glass	(6)	Rearview mirror mount	(11)	HOLDER
(2)	Dam rubber	(7)	SPACER	(12)	Clip
(3)	Molding	(8)	Rear gate glass	(13)	Fastener
(4)	Seal upper side	(9)	Pivot	(14)	Rear quarter glass
(5)	Locating pin	(10)	EPT sealer	(15)	Seal A

3. FRONT DOOR GLASS

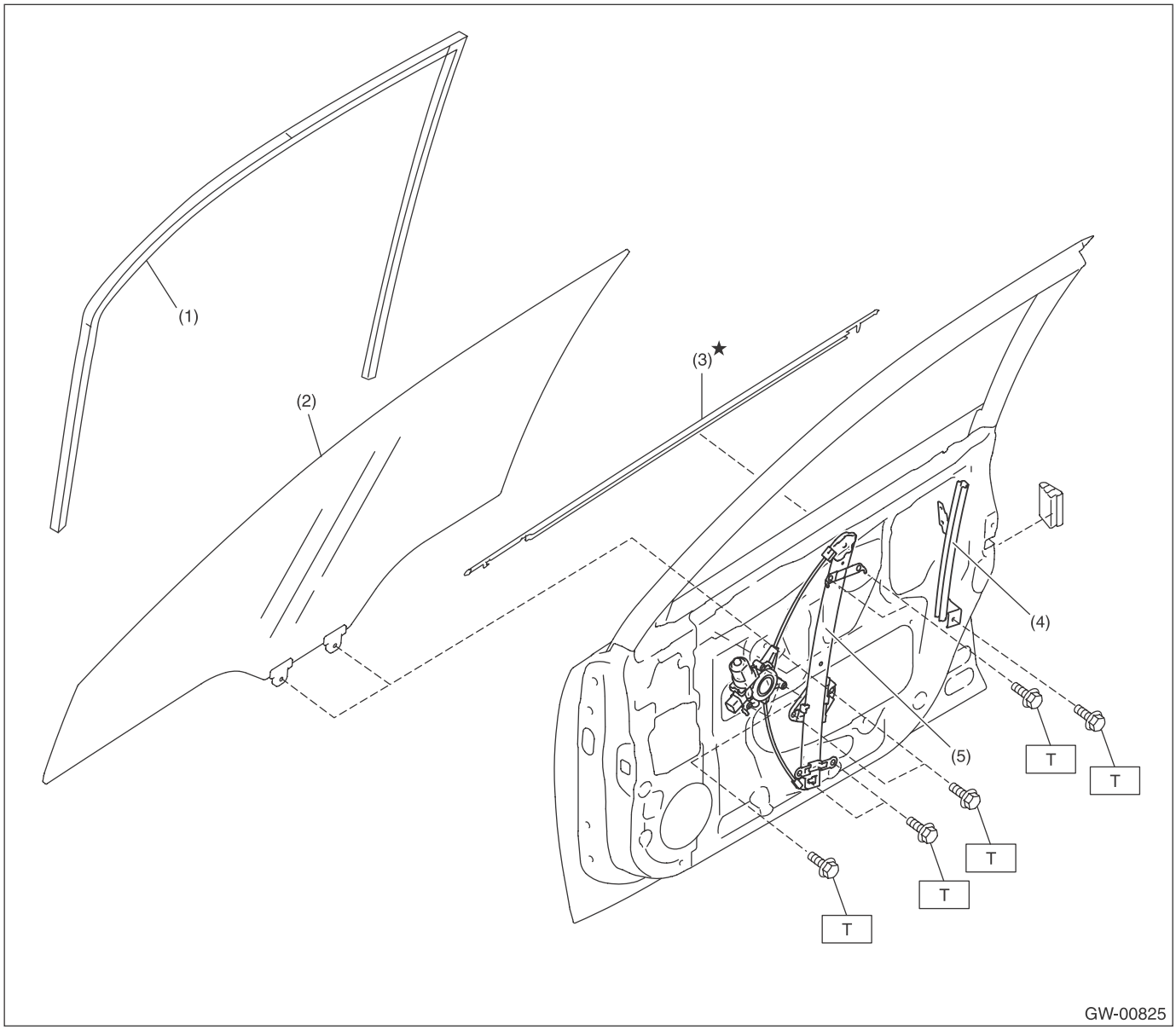

(1) Glass run rubber
(2) FRONT DOOR GLASS
(3) Weather strip outer
(4) Door sash
(5) Regulator and motor ASSY

Tightening torque:N·m (kgf-m, ft-lb)
T: 7.5 (0.76, 5.5)

4. REAR DOOR GLASS

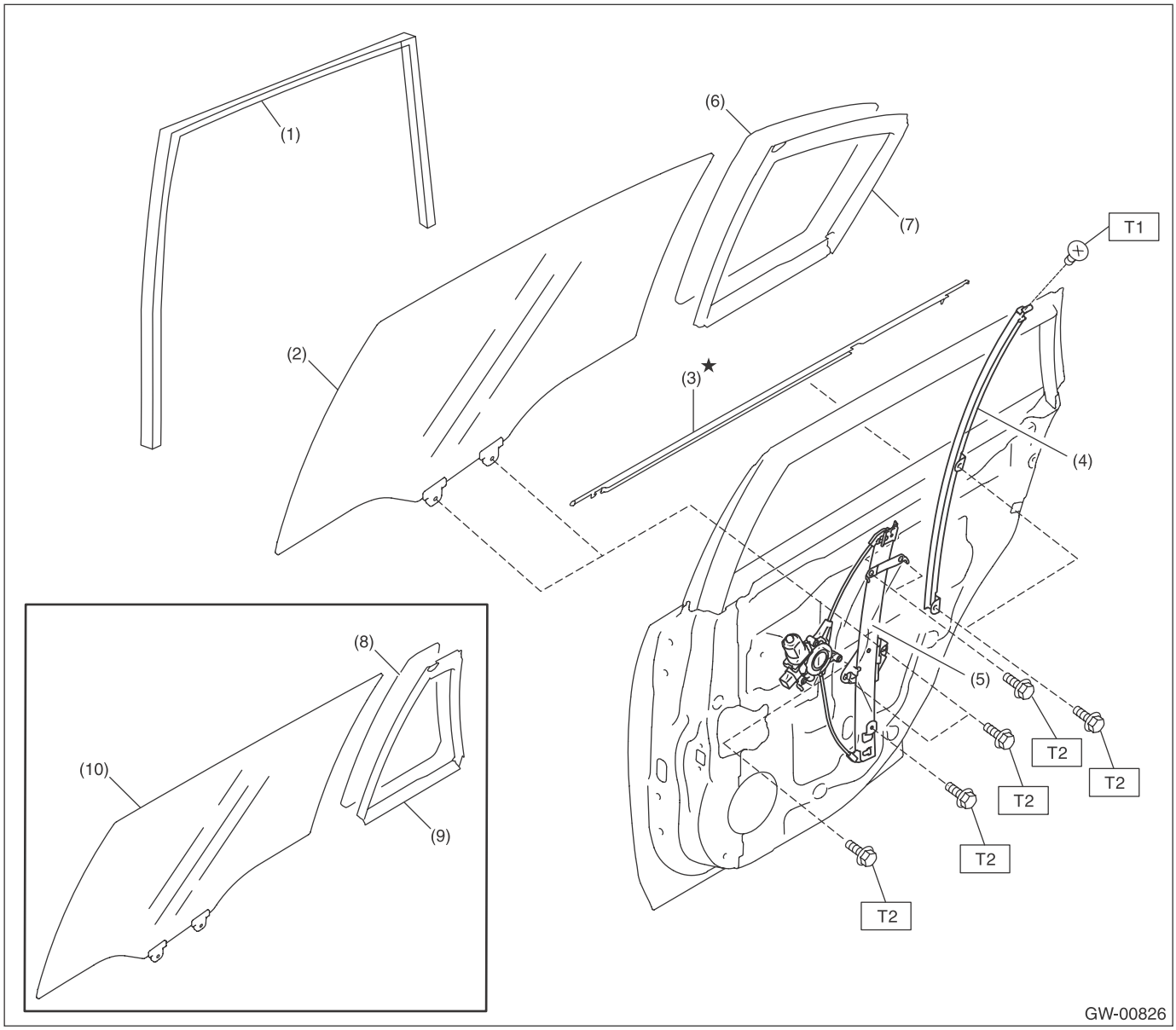

(1)	Glass run rubber	(6)	Partition glass (Sedan model)
(2)	Rear door glass (Sedan model)	(7)	Partition molding (Sedan model)
(3)	Weather strip outer	(8)	Partition glass (OUTBACK model)
(4)	Door sash	(9)	Partition molding (OUTBACK model)
(5)	Regulator and motor ASSY	(10)	Rear door glass (OUTBACK model)

Tightening torque:N·m (kgf-m, ft-lb)
T1: 2.2 (0.22, 1.6)
T2: 7.5 (0.76, 5.5)

5. MIRROR

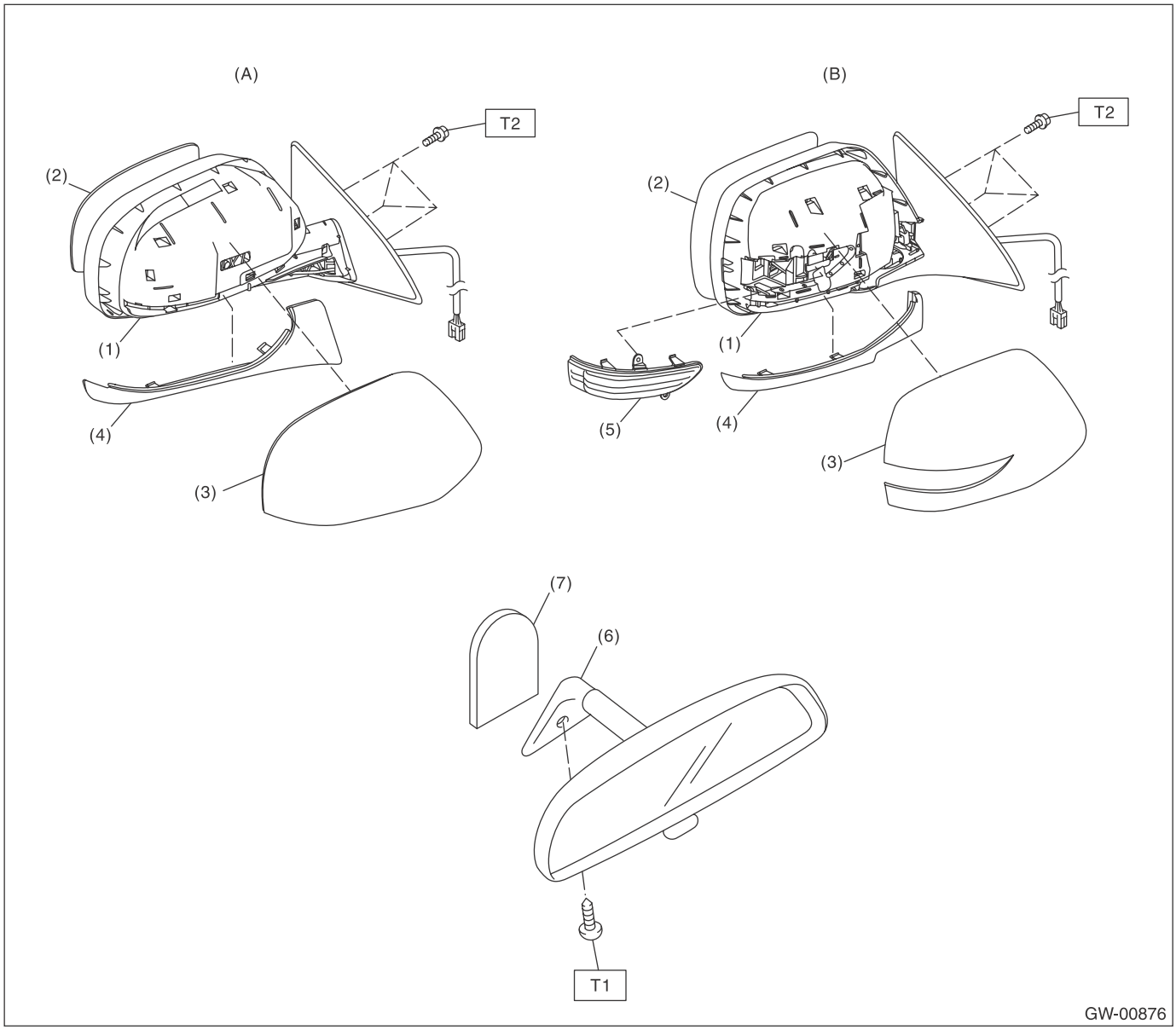

(A) Model without retractable mirror
(B) Model with retractable mirror

(1) Outer mirror
(2) MIRROR
(3) Scalp cap
(4) Outer mirror lower cover
(5) Side turn signal light
(6) Rearview mirror
(7) Mount

Tightening torque:N·m (kgf-m, ft-lb)
T1: 1.9 (0.19, 1.4)
T2: 4.5 (0.46, 3.3)

B: CAUTION

- When electrical connectors are disconnected, always conduct an operational check after connecting them again.
- Avoid impact and damage to the glass.

C: PREPARATION TOOL

1. SPECIAL TOOL

ILLUSTRATION	TOOL NUMBER	DESCRIPTION	REMARKS
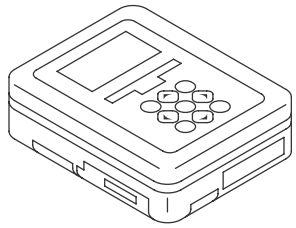 ST1B022XU0	1B022XU0	SUBARU SELECT MONITOR III KIT	Used for setting of each function and trouble-shooting for electrical system.

2. GENERAL TOOL

TOOL NAME	REMARKS
Circuit tester	Used for checking voltage and continuity.
Piano wire	Used for removing the window glass.
Cutter knife	Used for removing the window glass.
Windshield glass knife	Used for removing the window glass.
TORX® T20	Used to remove and install the rearview mirror.

2. Relay and Fuse

A: LOCATION

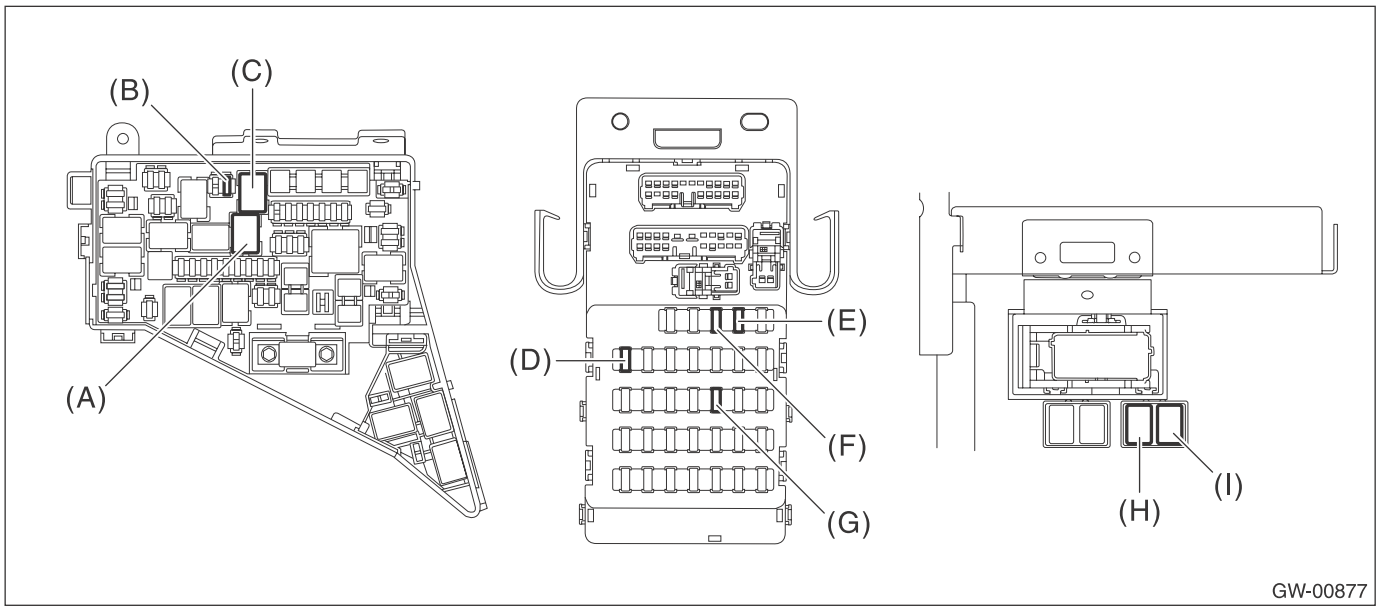

Main Fuse Box	Power window relay	(A)
	Fuse 25 A (rear defogger)	(B)
	Rear defogger relay	(C)
Relay & fuse box	Fuse 7.5 A (remote control mirror)	(D)
	Fuse 7.5 A (wiper deicer)	(E)
	Fuse 20 A (power window)	(F)
	Fuse 15 A (wiper deicer, remote control mirror)	(G)
Relay holder	Wiper deicer relay	(H)
	Mirror heater relay	(I)

B: INSPECTION

1. CHECK FUSE.

1) Remove the fuse and check visually.
2) If the fuse is blown out, replace the fuse.

2. CHECK RELAY

1) Check the resistance between relay terminals.

Terminal No.	Inspection conditions	Specification	Circuit
1 — 2	Always	1 MΩ or more	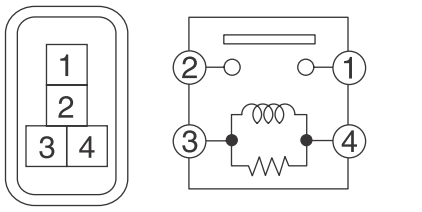 SR-00180
1 — 2	Apply battery voltage to the terminals between 4 — 3	Less than 1 Ω	

2) Replace the relay if it is found defective.

3. Power Window System

A: WIRING DIAGRAM

Refer to “Power Window System” in WI section. <Ref. to WI-180, WIRING DIAGRAM, Power Window System.>

B: INSPECTION

Symptoms	Inspection order
All power windows do not operate.	1. Check the fuse. 2. Check the power window relay. 3. Check the wiring harness.
Particular window does not operate.	1. Check the fuse. 2. Check the power window main switch. 3. Check the power window sub switch. 4. Check the power window motor. 5. Check the wiring harness.
“Window Lock” does not operate.	Check the power window main switch.
Driver’s side window moves slightly (approx. 20 mm (0.79 in)). (model with driver’s side AUTO UP function)	1. Check the power window motor. 2. Check the power window main switch. 3. Check the wiring harness.
Driver’s side window moves slightly (approx. 50 mm (1.97 in)). (model with driver’s side AUTO UP function) (This is not malfunction.)	Perform reset operation A. <Ref. to GW-10, RESET OPERATION A, OPERATION, Power Window System.>
Driver’s side window does not close completely. (model with driver’s side AUTO UP function) (After fully closed with AUTO UP, the window reverses and slightly opens.)	Perform reset operation B. <Ref. to GW-10, RESET OPERATION B, OPERATION, Power Window System.>

C: OPERATION

1. RESET OPERATION A

1) Sit in the driver's seat and close the door.
2) Turn the ignition switch to ON.
3) Operate the power window main switch to open the window glass halfway.
4) Operate the power window main switch to "UP" direction to fully close the driver's side window glass.
5) While the window glass is fully closed, hold down the power window switch to "UP" direction for one second.
6) Operate the power window main switch to "AUTO DOWN" direction to check whether the window fully opens properly.

NOTE:
If the window does not fully open properly, repeat steps 1) to 6).

2. RESET OPERATION B

1) Sit in the driver's seat and close the door.
2) Turn the ignition switch to ON.
3) Perform "AUTO UP" operation for the driver's side window glass, by fully pulling up the power window main switch to cause the reverse operation (in reverse operation, the window is repeatedly fully closed and then reversed to open it slightly.) 10 times in row.
4) Check that the "AUTO UP" does not operate.
5) Perform reset operation A.
6) Check that the window operates properly by operating the "AUTO UP" and "AUTO DOWN" switch.

NOTE:
If the window does not fully open/close properly, repeat steps 1) to 6).

D: NOTE

For operation procedures of each component of the power window system, refer to the respective sections.
- Power window control switch:<Ref. to GW-11, Power Window Control Switch.>
- Front door glass:<Ref. to GW-16, Front Door Glass.>
- Front regulator and motor assembly:<Ref. to GW-18, Front Regulator and Motor Assembly.>
- Rear door glass:<Ref. to GW-32, Rear Door Glass.>
- Rear regulator and motor assembly:<Ref. to GW-34, Rear Regulator and Motor Assembly.>

4. Power Window Control Switch

A: REMOVAL

1. MAIN SWITCH

1) Remove the front door trim. <Ref. to EI-60, FRONT DOOR, REMOVAL, Door Trim.>
2) Remove the power window switch panel.

CAUTION:
Do not damage the door trim with the switch panel.

(1) Insert a sheet of protective paper (a) between switch panel and door trim.
(2) Remove the screws and disconnect the connector.
(3) Disconnect the claws and then remove the power window switch panel.

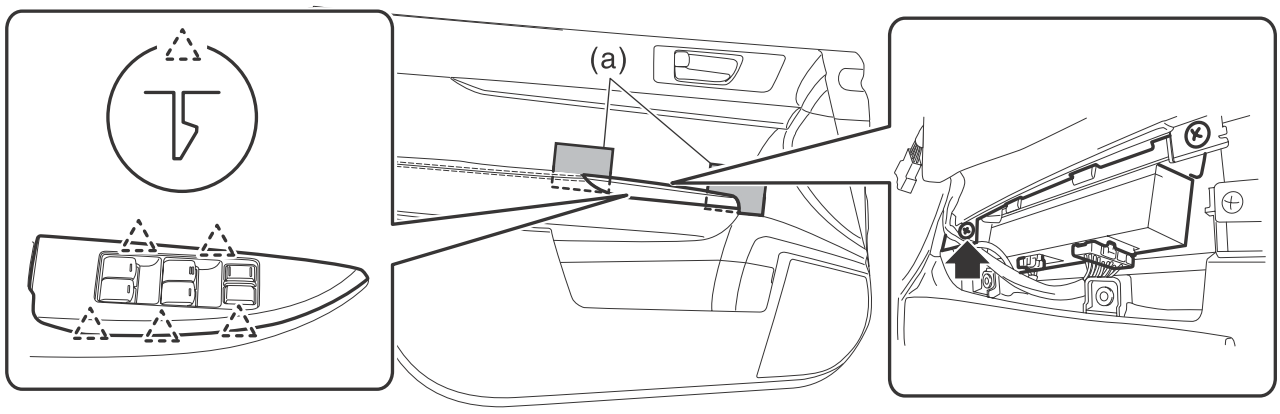

GW-00882

(4) Remove the screws and remove the power window main switch.

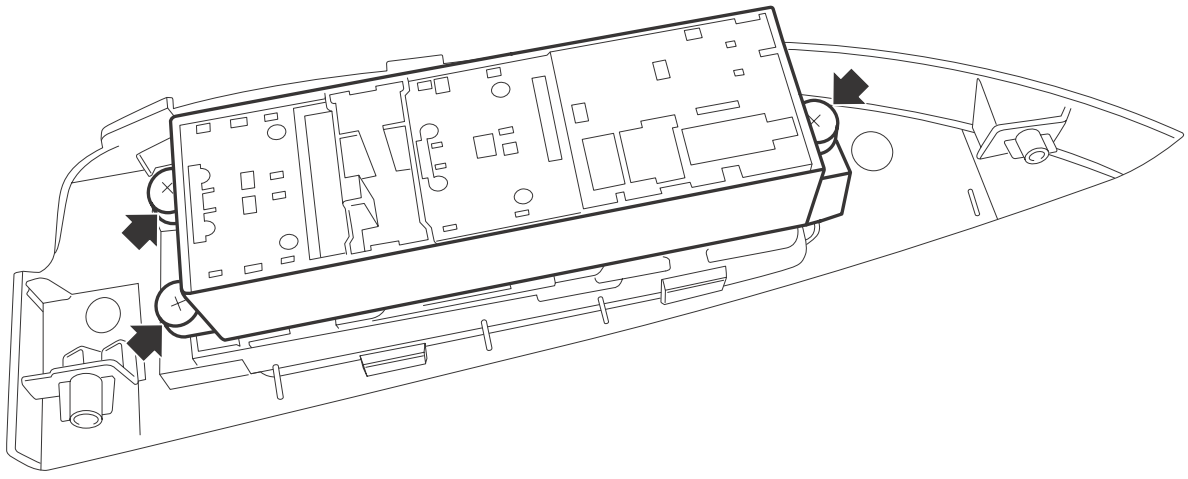

GW-00883

2. SUB-SWITCH

1) Remove the rear door trim. <Ref. to EI-61, REAR DOOR, REMOVAL, Door Trim.>
2) Remove the power window switch panel.

CAUTION:
Do not damage the door trim with the switch panel.

(1) Insert a sheet of protective paper (a) between switch panel and door trim.
(2) Remove the screws and disconnect the connector.
(3) Disconnect the claws and then remove the power window switch panel.

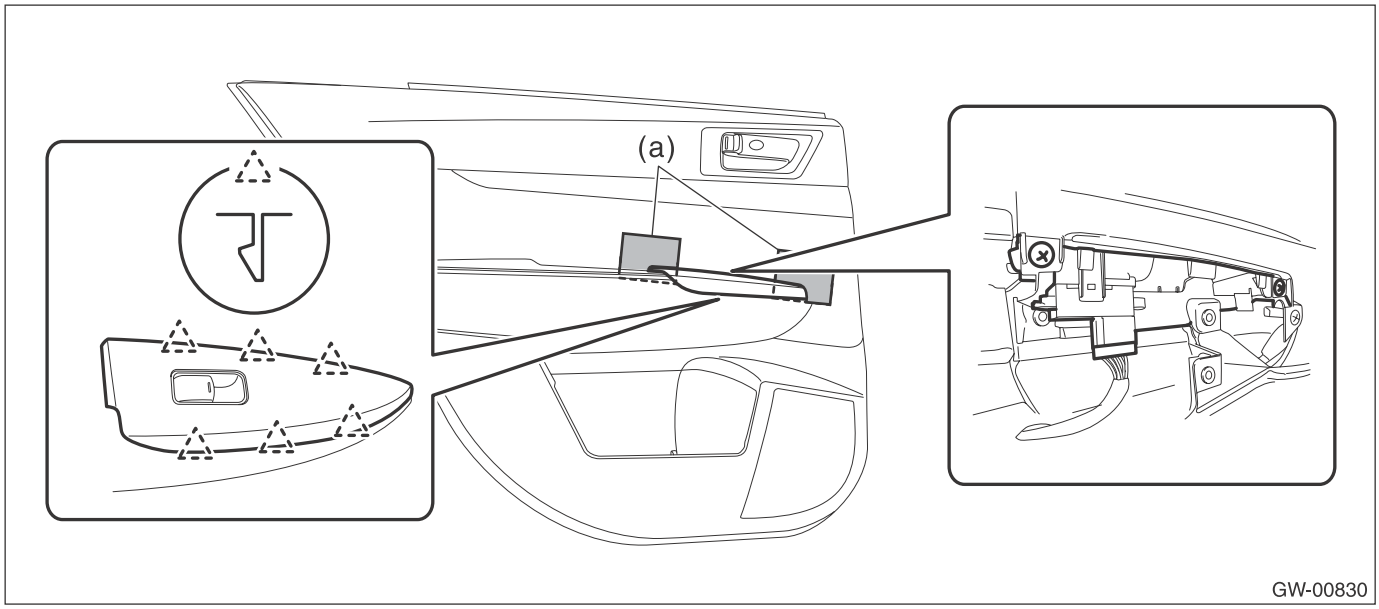

3) Disconnect the claws and then remove the power window sub switch.

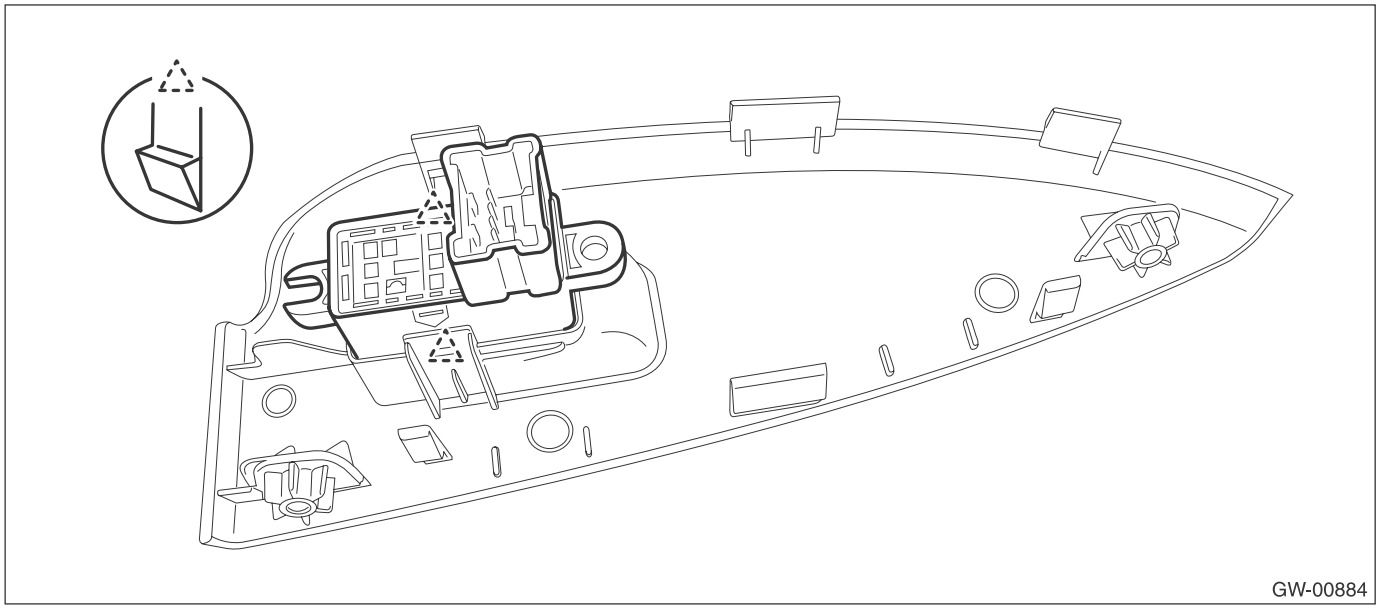

B: INSTALLATION

CAUTION:
• After installation of main switch, always perform the initial setting. (model with driver's side AUTO UP function)
Failure to do so may cause the improper activation of auto-reverse operation for pinching hazard prevention.
• Use protective paper to avoid damage to the door trim.
1) Install each part in the reverse order of removal.
2) Perform initial setting operation (reset operation A). <Ref. to GW-10, RESET OPERATION A, OPERATION, Power Window System.>

C: INSPECTION

1. MAIN SWITCH

• Driver's side

CAUTION:
Since the driver's side power window switch is controlled by CPU, do not check continuity for switch alone with the circuit tester. Performing continuity check with circuit tester may damage the driver's side power window switch circuit.
Check output from the power window main switch to driver's side motor using the oscilloscope function in the Subaru Select Monitor.
1) Remove the power window main switch.
2) Connect the battery and the Subaru Select Monitor to the power window main switch terminal.

CAUTION:
Never mix up the terminals when connecting the power window main switch connector and battery. If connected to a wrong terminal, the power window main switch may be damaged.

NOTE:
• When the battery is connected to the power window main switch terminal, the letters "AUTO" on the driver's side knob illuminates.
• For detailed procedures, refer to "Subaru Select Monitor Operation Manual".

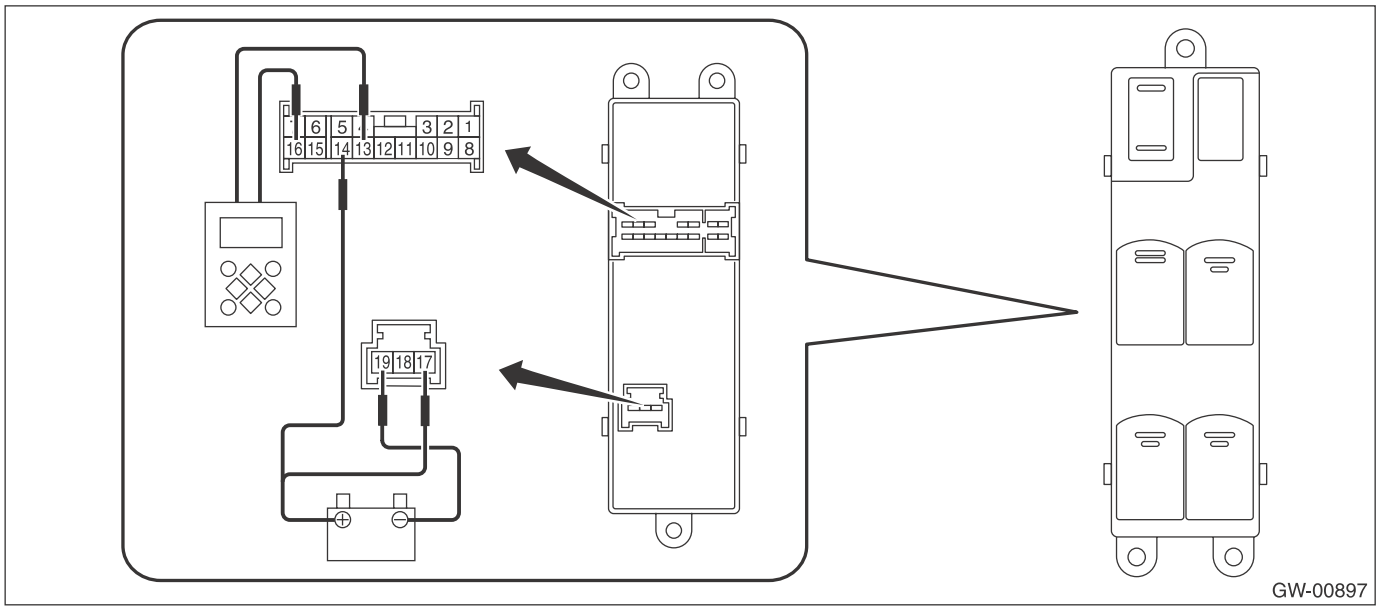

3) Operate the main switch and check the output.

NOTE:
Since output time during window UP operation is extremely short, it cannot be checked without using a measuring instrument such as oscilloscope. Output is constantly produced while the switch is operated for window DOWN operation.

Inspection conditions	Output time (model without driver's side AUTO UP function)	Output time (model with driver's side AUTO UP function)	Specification
AUTO UP	600 ms	Approx. 130 ms	Battery voltage
UP	During switch operation		
OFF	—	—	0 V
DOWN	During switch operation	During switch operation	Battery voltage
AUTO DOWN	600 ms	Approx. 300 ms	

4) Replace the power window main switch if the inspection result is not within the standard value.

- **Except for driver's seat**

1) Check the resistance between main switch terminals.

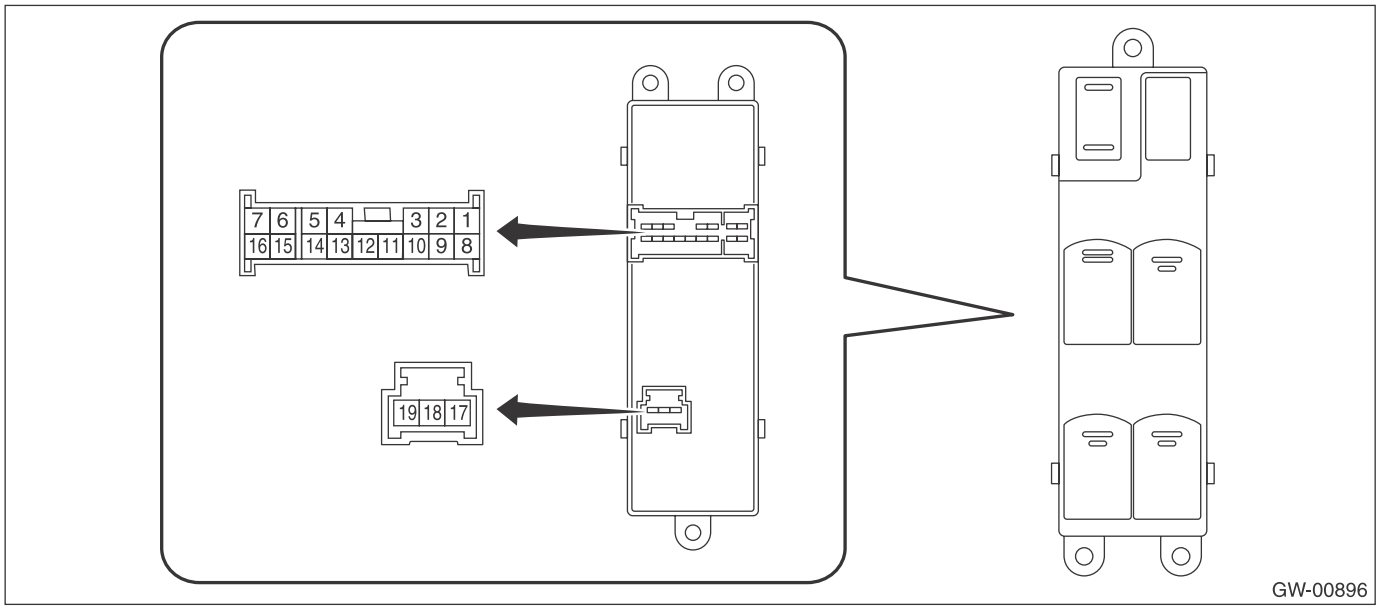

	Terminal No.	Inspection conditions	Specification
Passenger's side	14 — 8 19 — 12	UP	Less than 1 Ω
	14 — 12 14 — 8	OFF	1 MΩ or more
	19 — 8 19 — 12 8 — 12		Less than 1 Ω
	14 — 12 19 — 8	DOWN	Less than 1 Ω

	Terminal No.	Inspection conditions	Specification
Rear LH	14 — 7 19 — 5	UP	Less than 1 Ω
	14 — 7 14 — 5	OFF	1 MΩ or more
	19 — 7 19 — 5 7 — 5		Less than 1 Ω
	14 — 5 19 — 7	DOWN	Less than 1 Ω
Rear RH	14 — 1 19 — 3	UP	Less than 1 Ω
	14 — 1 14 — 3	OFF	1 MΩ or more
	19 — 3 19 — 1 3 — 1		Less than 1 Ω
	14 — 3 19 — 1	DOWN	Less than 1 Ω

2) Replace the main switch if the inspection result is not within the standard value.

2. SUB-SWITCH

1) Remove the sub switch.
2) Check the resistance between sub switch terminals.

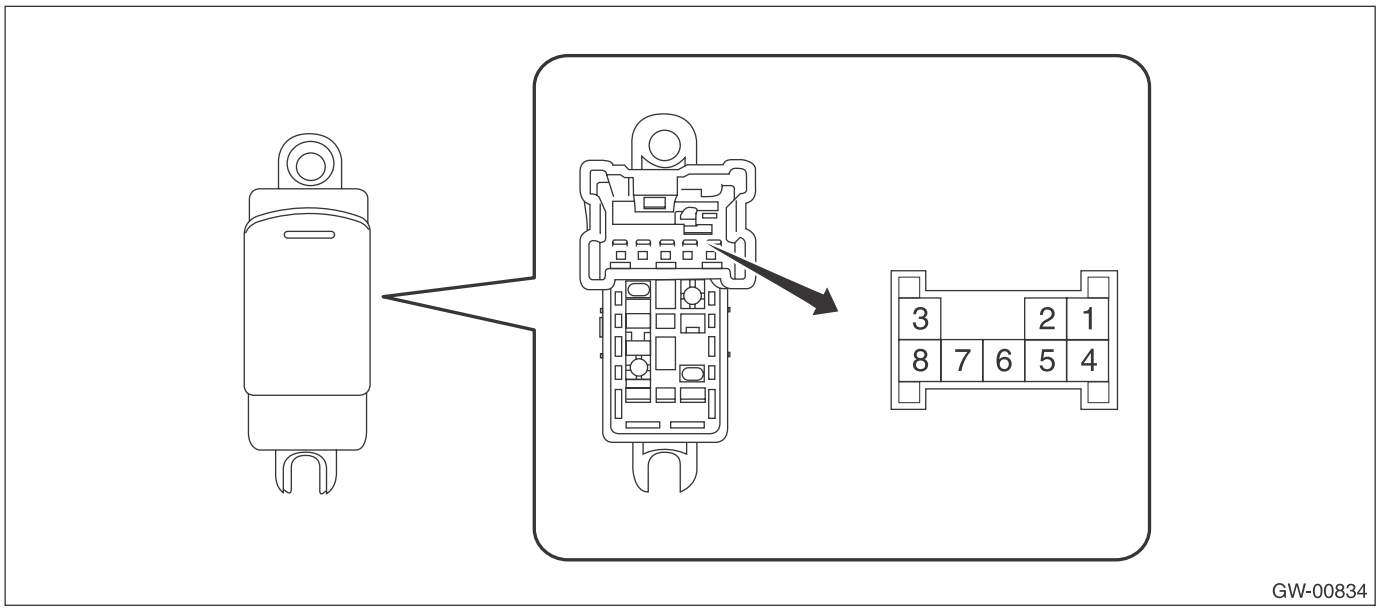

	Terminal No.	Inspection conditions	Specification
Passenger's seat, rear	4 — 5 6 — 7	UP	Less than 1 Ω
	7 — 4 8 — 4	OFF	1 MΩ or more
	5 — 8 6 — 7		Less than 1 Ω
	4 — 6 5 — 8	DOWN	Less than 1 Ω

3) Replace the sub switch if the inspection result is not within the standard value.

5. Front Door Glass

A: REMOVAL

1) Remove the front door trim. <Ref. to EI-60, FRONT DOOR, REMOVAL, Door Trim.>
2) Remove the sealing cover.

CAUTION:
- **Carefully remove the butyl tape. Excessive force will easily break the cover.**
- **If cover gets broken, replace it with a new part.**

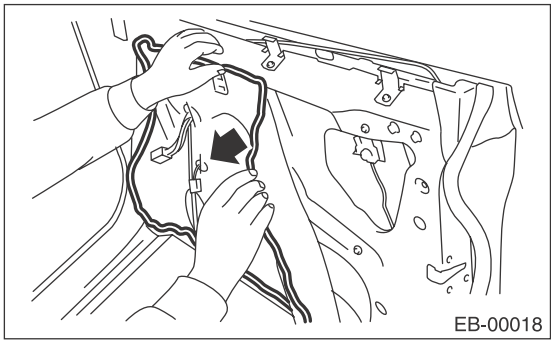

3) Attach the battery ground cable and power window switch and turn the ignition to ON.
4) Remove the front door glass.
   (1) Operate the power window switch to move the front door glass to the position where the mounting bolts can be seen.
   (2) Remove the bolt.

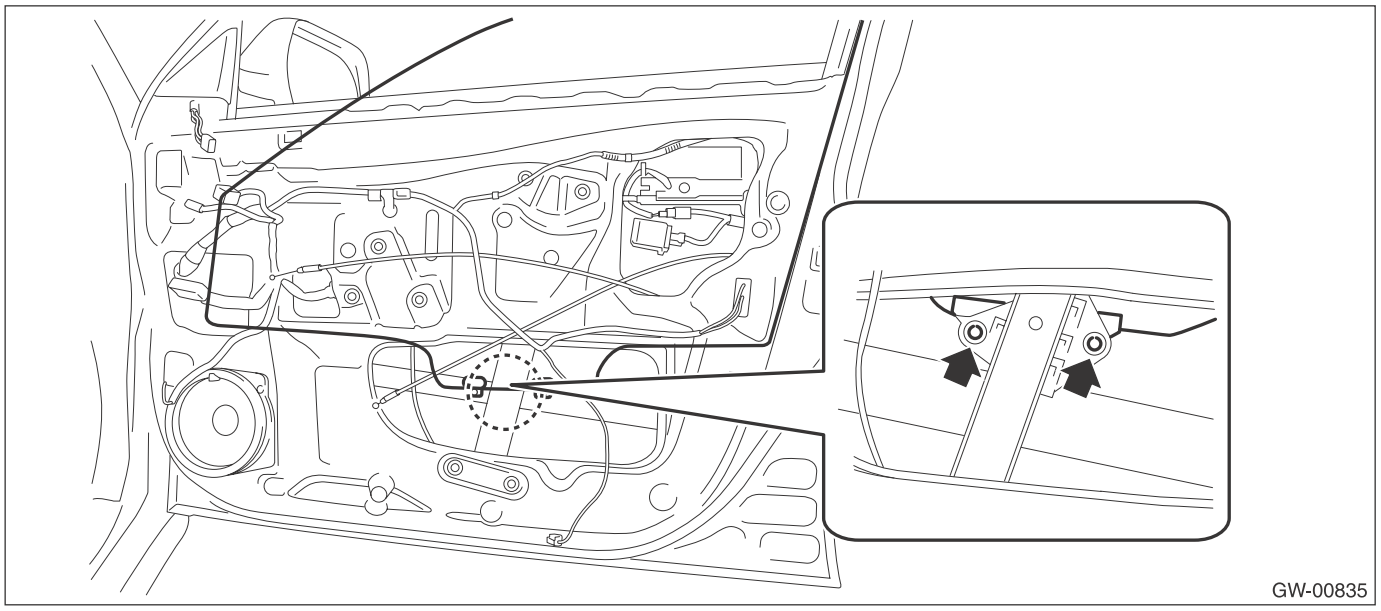

(3) While tilting the glass, remove the windshield glass.

CAUTION:
Avoid impact and damage to the glass.

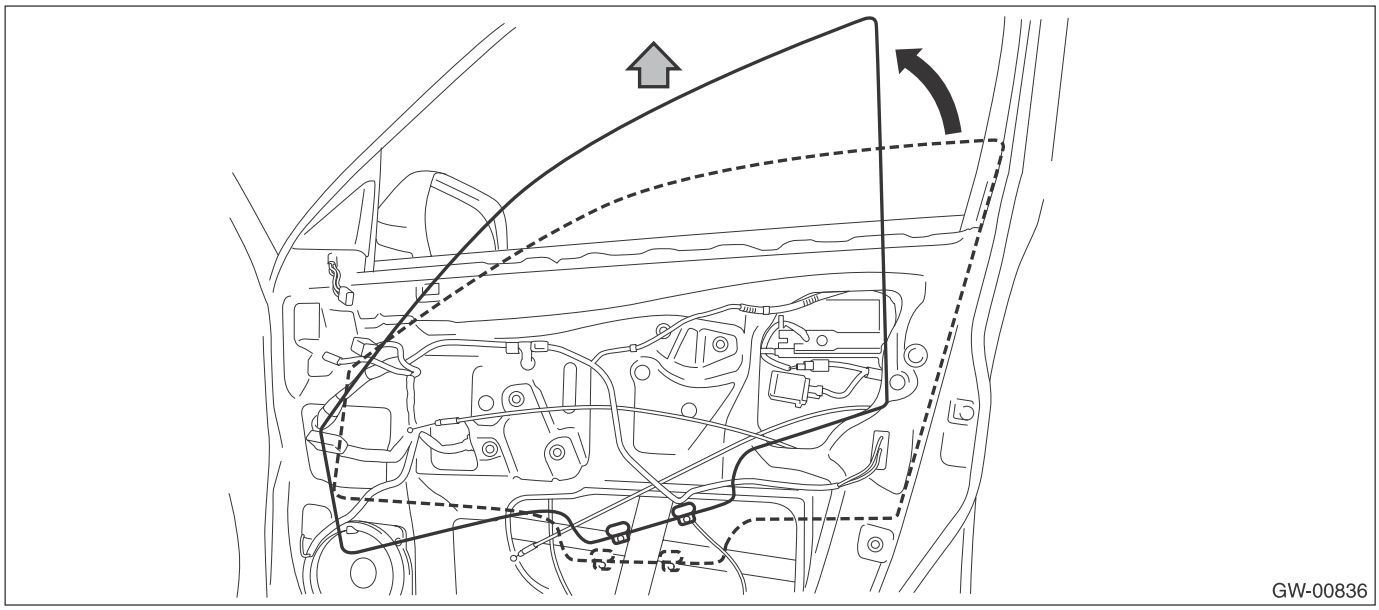

B: INSTALLATION

CAUTION:
Make sure that the glass run rubber is placed securely in the door frame and sash.
Install each part in the reverse order of removal.

Tightening torque:
Refer to "COMPONENT" of "General Description". <Ref. to GW-4, FRONT DOOR GLASS, COMPONENT, General Description.>

6. Front Regulator and Motor Assembly

A: REMOVAL

1) Remove the front door glass. <Ref. to GW-16, REMOVAL, Front Door Glass.>
2) Remove the front regulator and motor assembly.
   (1) Disconnect the connector.
   (2) Remove the bolts, and then remove the front regulator and motor assembly.

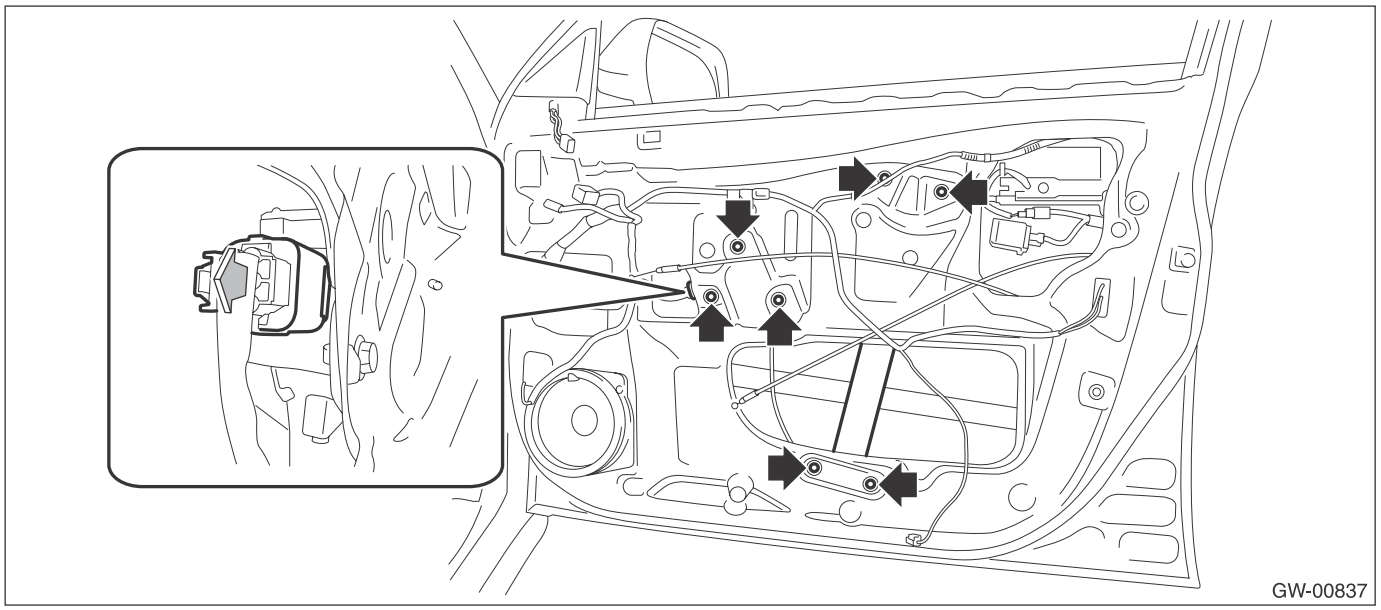

B: INSTALLATION

Install each part in the reverse order of removal.

Tightening torque:
Refer to "COMPONENT" of "General Description". <Ref. to GW-4, FRONT DOOR GLASS, COMPONENT, General Description.>

C: INSPECTION

1) Disconnect the motor connector.
2) Apply battery voltage between the motor connector terminals and check the motor operation.

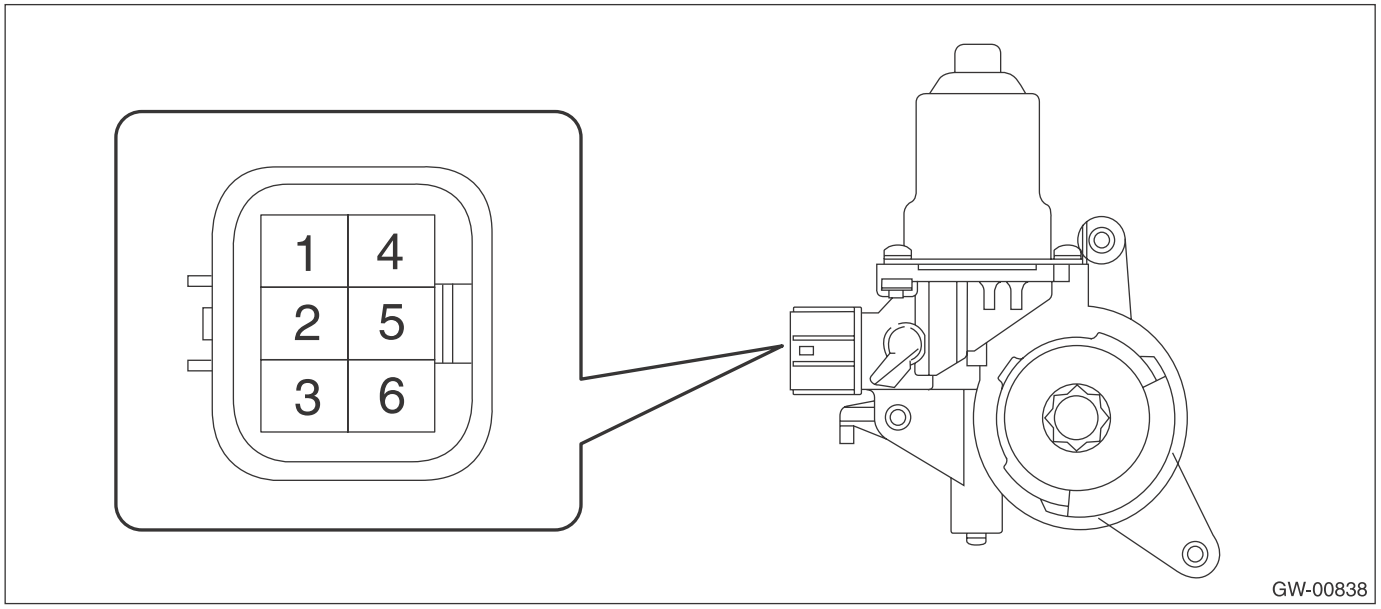

- RH side

Terminal No.	Inspection conditions	Specification
1 (+) — 4 (–)	Apply battery voltage between terminals.	Increase
4 (+) — 1 (–)	Apply battery voltage between terminals.	Decrease

- LH side

Terminal No.	Inspection conditions	Specification
3 (+) — 6 (–)	Apply battery voltage between terminals.	Increase
6 (+) — 3 (–)	Apply battery voltage between terminals.	Decrease

3) If the inspection results in improper operation, replace the front regulator and motor assembly.

7. Remote Control Mirror System

A: WIRING DIAGRAM

Refer to “Remote Control Mirror System” in the wiring diagram. <Ref. to WI-198, WIRING DIAGRAM, Remote Control Mirror System.>

B: INSPECTION

1. SYMPTOM CHART

Symptoms	Inspection order
All function does not operate.	1. Check the fuse. 2. Check the remote control mirror switch. 3. Check the wiring harness.
One side of the mirror motor does not operate.	1. Check the remote control mirror switch. 2. Check the mirror motor. 3. Check the wiring harness.
Mirror heater does not operate.	1. Check the defogger switch. 2. Check the mirror heater relay. 3. Check the mirror heater. 4. Check the wiring harness.

C: NOTE

For operation procedures of each component of the remote control mirror system, refer to the respective sections.

- Scalp cap:<Ref. to GW-21, Scalp Cap.>
- Outer mirror assembly:<Ref. to GW-25, Outer Mirror Assembly.>
- Outer mirror:<Ref. to GW-27, Outer Mirror.>
- Remote control mirror switch:<Ref. to GW-29, Remote Control Mirror Switch.>

8. Scalp Cap

A: REPLACEMENT

1. MODEL WITHOUT RETRACTABLE MIRROR

CAUTION:
• When removing the mirror, be careful not to damage the back surface of mirror with a flat tip screwdriver.
• When installing the mirror, insert the connector and clip securely.
1) Operate the remote control mirror switch to face the mirror surface upward.
2) Disconnect the ground cable from battery.
3) Remove the outer mirror.
(1) Disconnect the clips using a flat tip screwdriver.

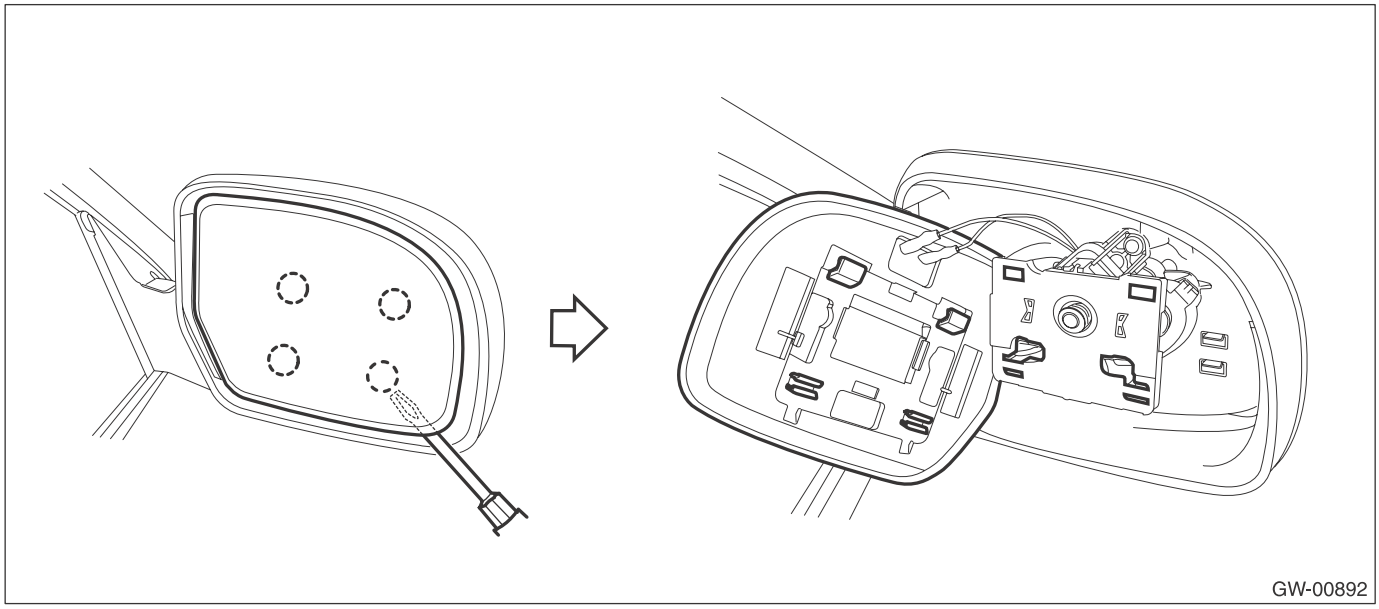
GW-00892

(2) Disconnect the mirror heater connector. (Model with mirror heater)

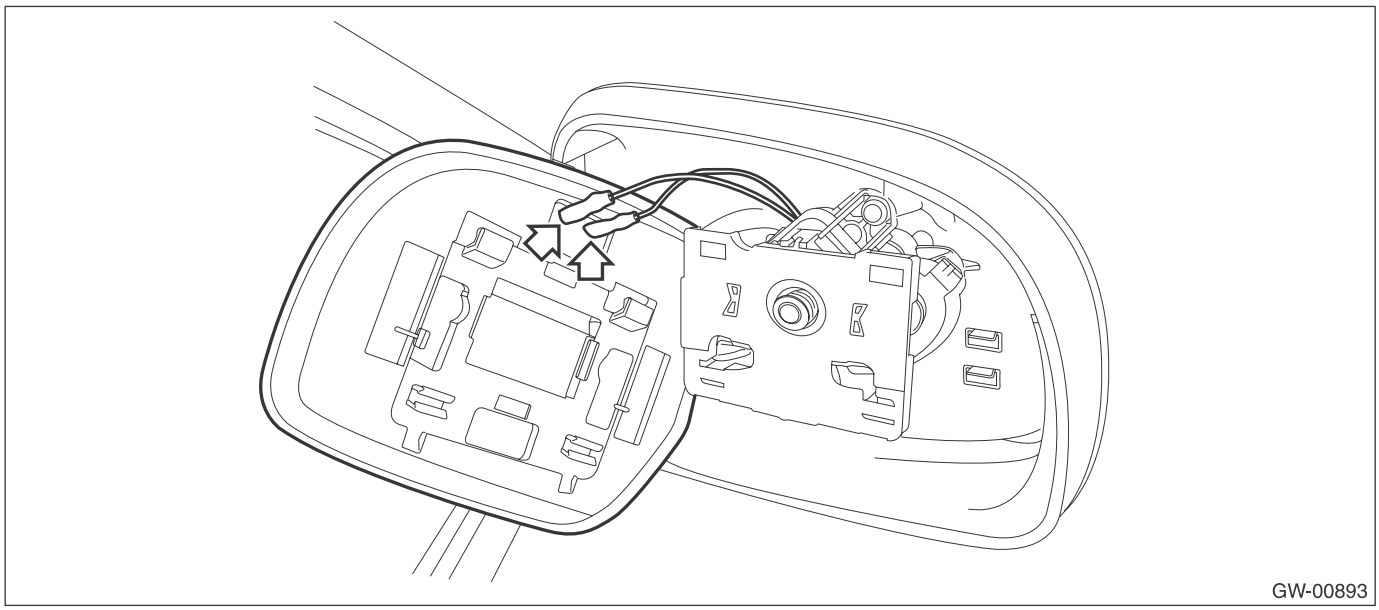
GW-00893

4) Disconnect the claws and then remove the scalp cap.

CAUTION:
Be careful not to apply excessive force when removing the scalp cap, as the lower hooks may become damaged.

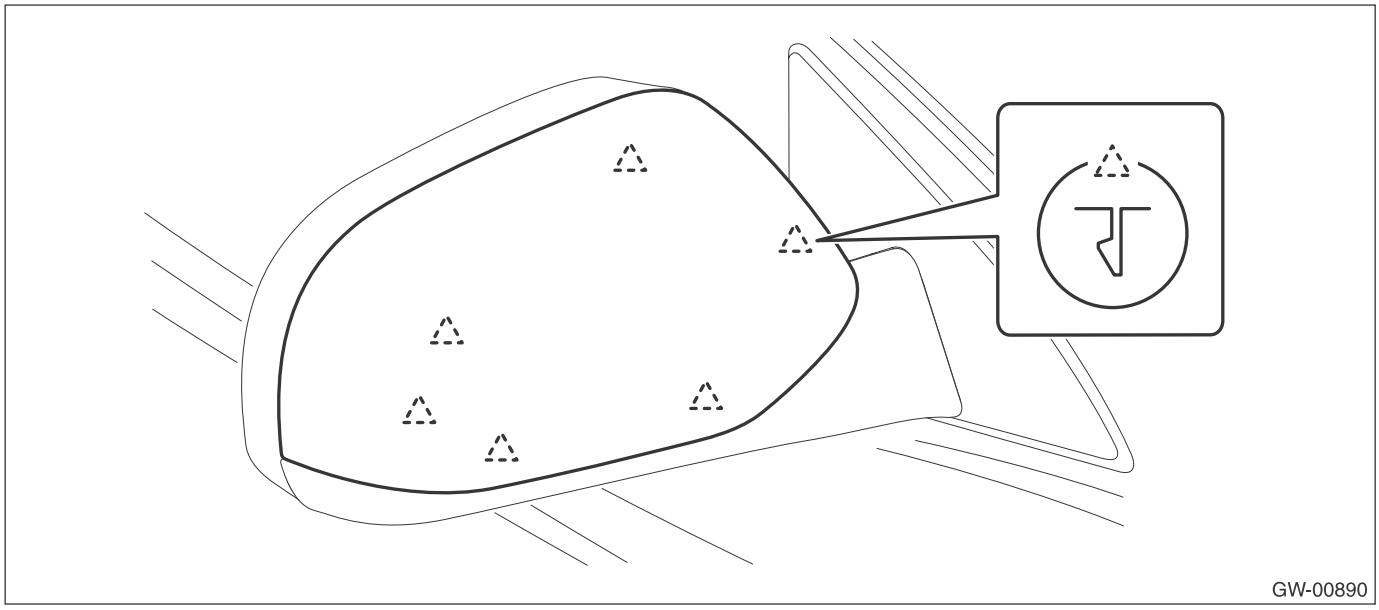

5) Engage the claws into the hole and install the scalp cap.

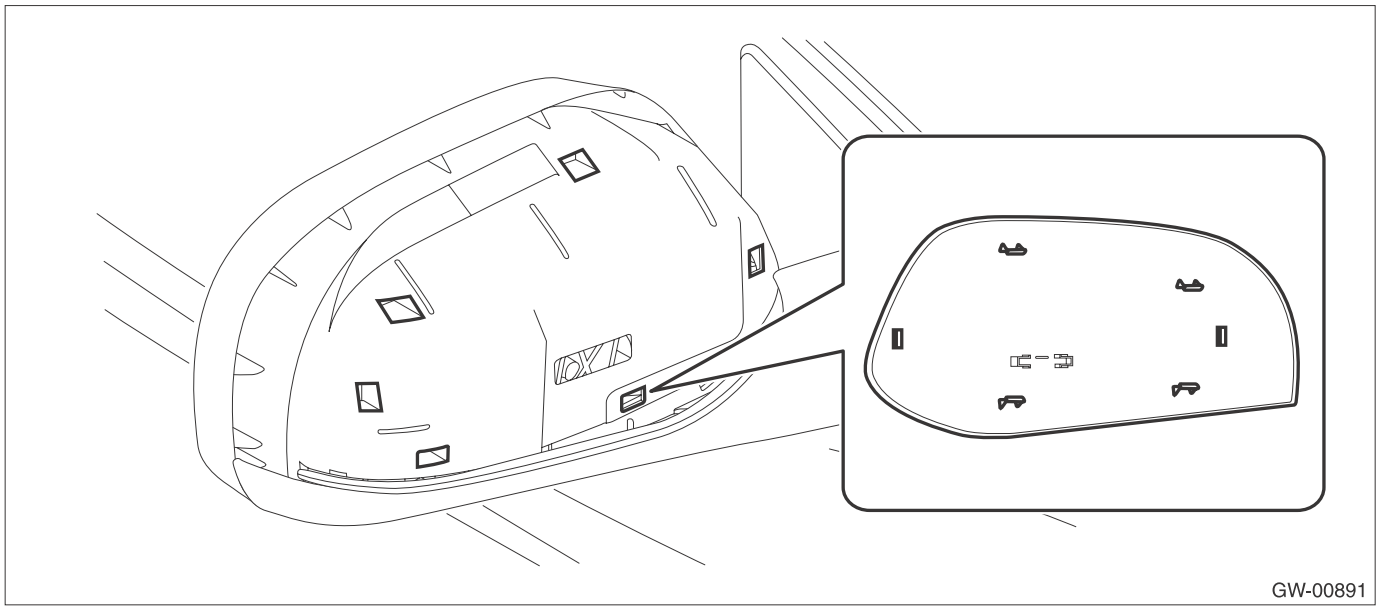

6) Check that all the claws are securely engaged.

2. MODEL WITH RETRACTABLE MIRROR

CAUTION:
- **When removing the mirror, be careful not to damage the back surface of mirror with a flat tip screwdriver.**
- **When installing the mirror, insert the connector and clip securely.**

1) Operate the remote control mirror switch to face the mirror surface upward.
2) Disconnect the ground cable from battery.
3) Remove the outer mirror.
   (1) Disconnect the clips using a flat tip screwdriver.

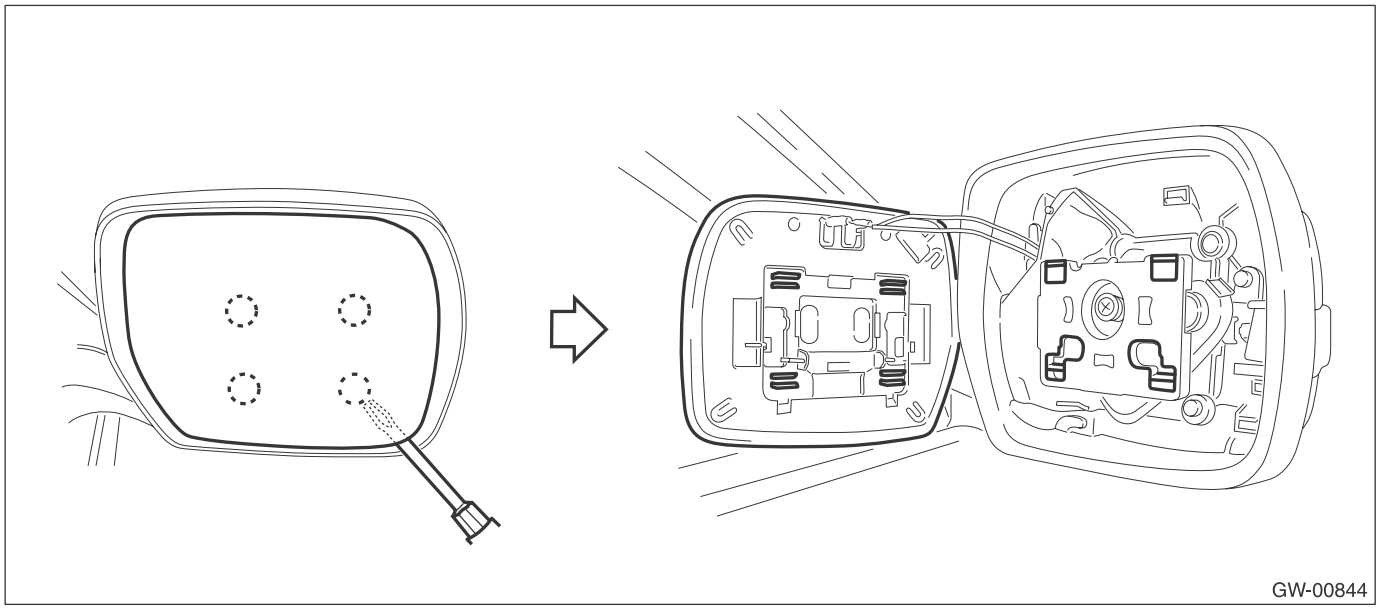

   (2) Disconnect the mirror heater connector. (Model with mirror heater)

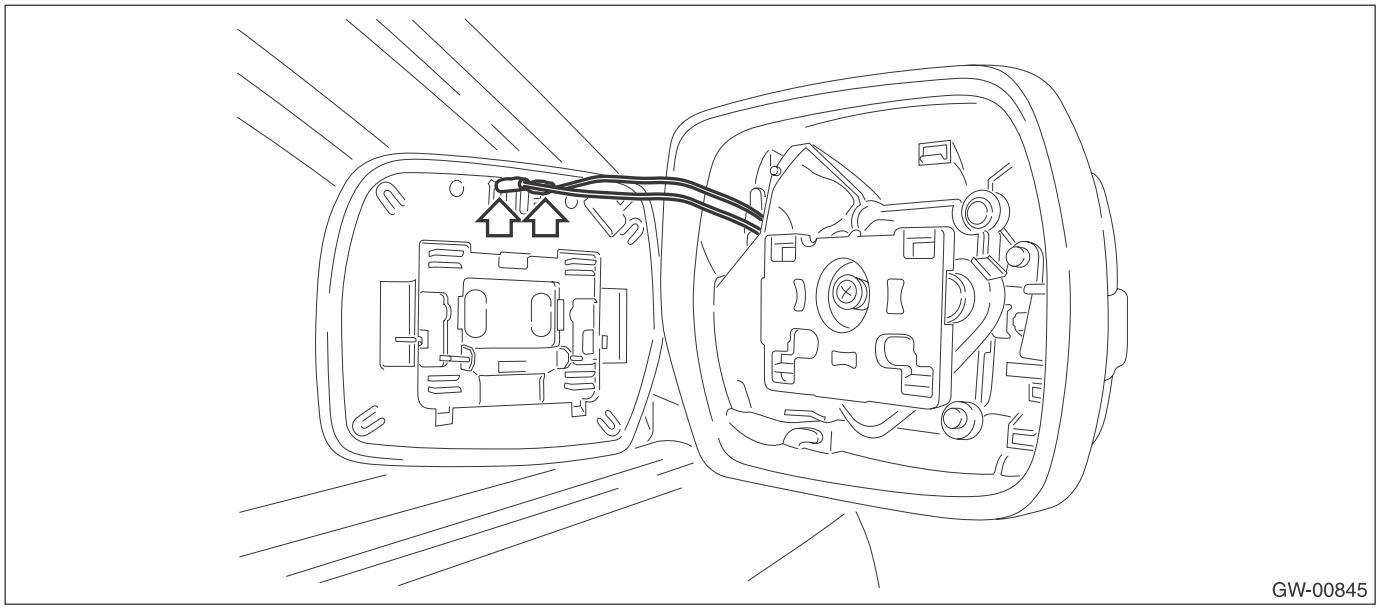

4) Disconnect the claws and then remove the scalp cap.

CAUTION:
Be careful not to apply excessive force when removing the scalp cap, as the lower hooks may become damaged.

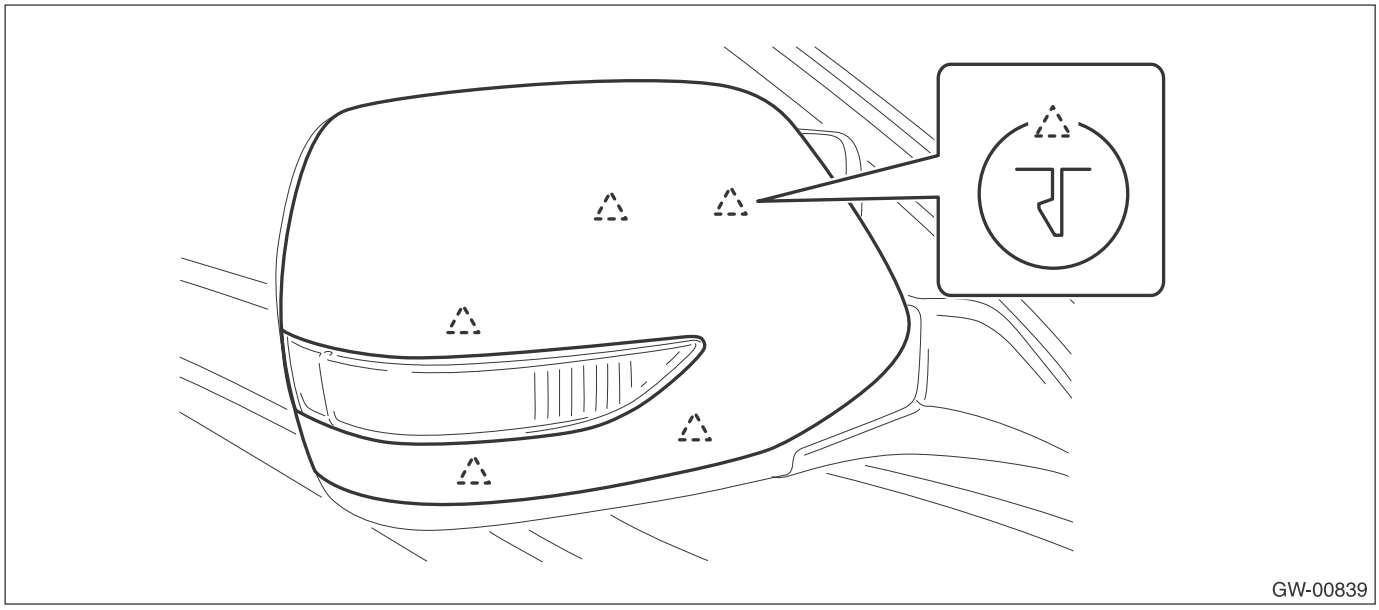
GW-00839

5) Engage the claws into the hole and install the scalp cap.

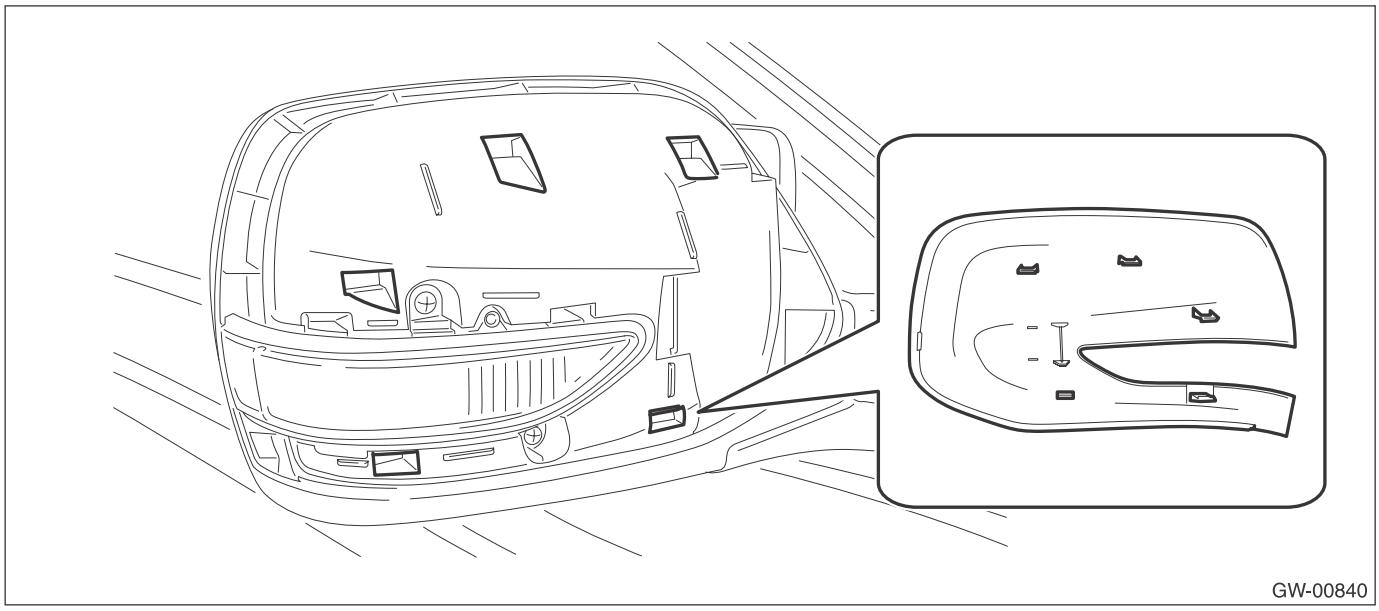
GW-00840

6) Check that all the claws are securely engaged.

9. Outer Mirror Assembly

A: REMOVAL

1) Remove the front door trim. <Ref. to EI-60, FRONT DOOR, REMOVAL, Door Trim.>
2) Remove the outer mirror assembly.
   (1) Disconnect the connector.
   (2) Remove the bolts, and then remove the outer mirror assembly.

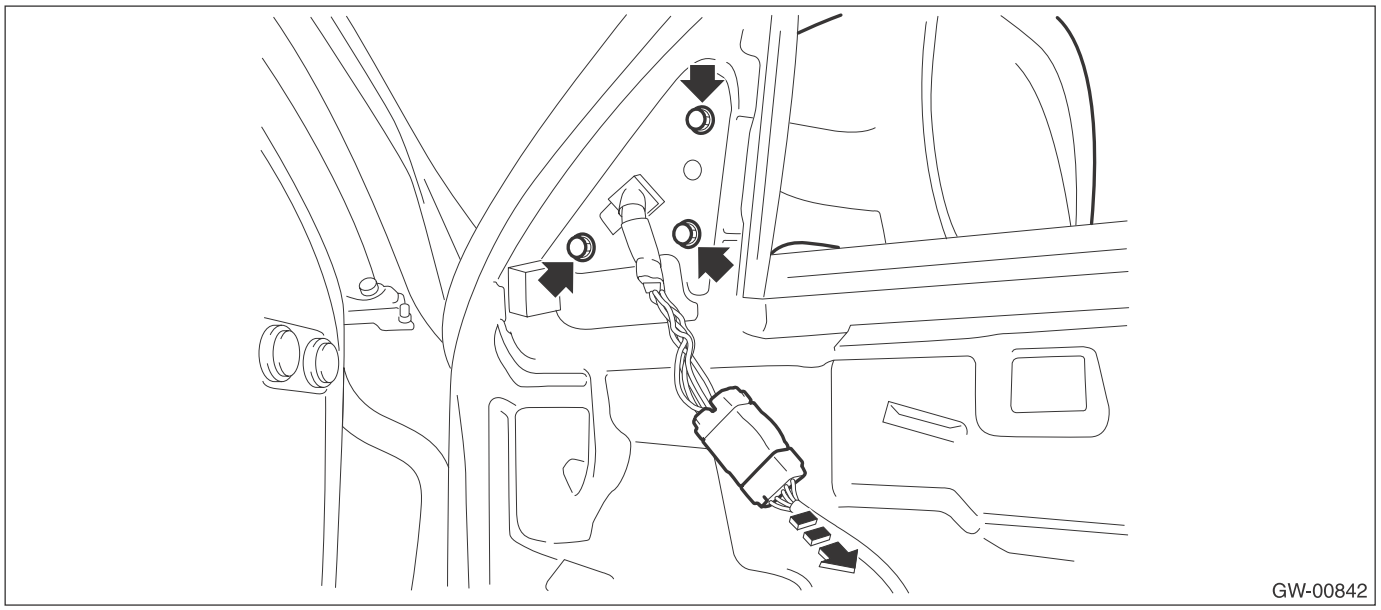

B: INSTALLATION

Install each part in the reverse order of removal.

Tightening torque:
Outer mirror assembly: 4.5 N·m (0.46 kgf-m, 3.3 ft-lb)

C: INSPECTION

1) Disconnect the outer mirror connector.
2) Apply battery voltage between the outer mirror connector terminals and check the mirror operation.

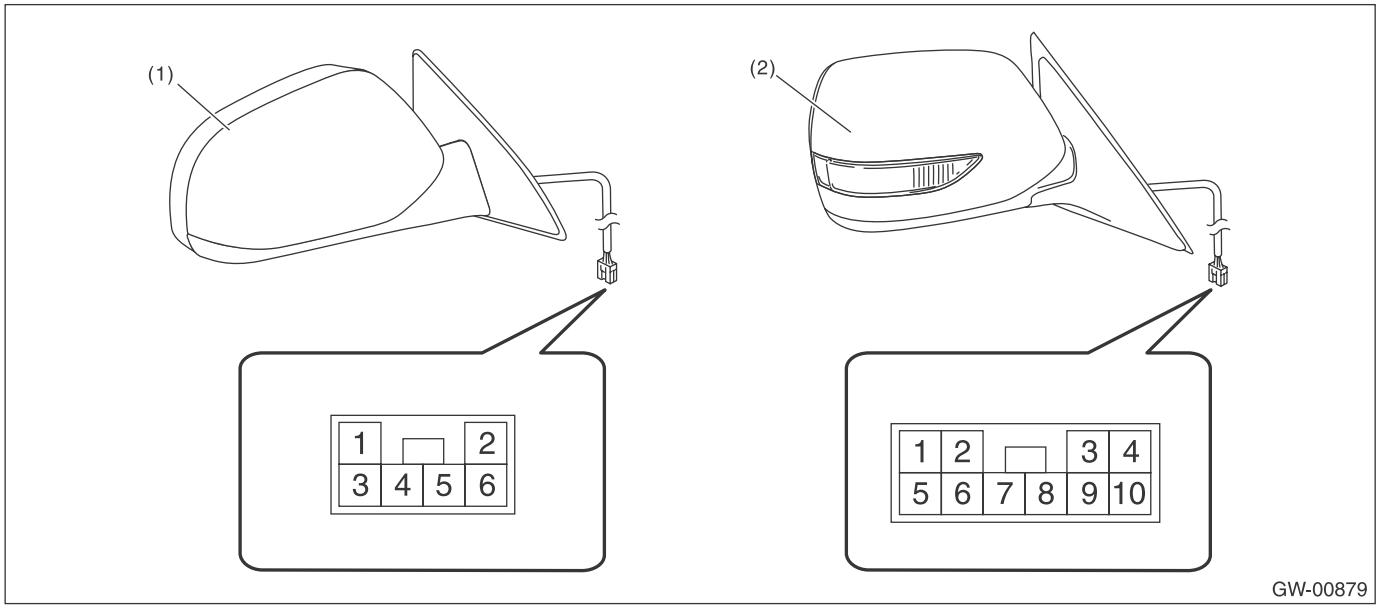

(1) Model without retractable mirror (2) Model with retractable mirror

- Model without retractable mirror

Terminal No.	Inspection conditions	Switch position
—	—	OFF
2 (+) — 5 (–)	Apply battery voltage between terminals.	UP
5 (+) — 2 (–)	Apply battery voltage between terminals.	DOWN
4 (+) — 2 (–)	Apply battery voltage between terminals.	LEFT
2 (+) — 4 (–)	Apply battery voltage between terminals.	RIGHT

- Model with retractable mirror

Terminal No.	Inspection conditions	Switch position
—	—	OFF
3 (+) — 8 (–)	Apply battery voltage between terminals.	UP
8 (+) — 3 (–)	Apply battery voltage between terminals.	DOWN
7 (+) — 3 (–)	Apply battery voltage between terminals.	LEFT
3 (+) — 7 (–)	Apply battery voltage between terminals.	RIGHT
2 (+) — 6 (–)	Apply battery voltage between terminals.	Folding
6 (+) — 2 (–)	Apply battery voltage between terminals.	Unfolding

3) If the inspection results in improper operation, replace the outer mirror.

NOTE:
There always exists a current of 1.2 mA at the electric retraction terminal.

10.Outer Mirror

A: REPLACEMENT

1. MODEL WITHOUT RETRACTABLE MIRROR

CAUTION:
- **When removing the mirror, be careful not to damage the back surface of mirror with a flat tip screwdriver.**
- **When installing the mirror, insert the connector and clip securely.**

1) Operate the remote control mirror switch to face the mirror surface upward.
2) Disconnect the ground cable from battery.
3) Remove the outer mirror.
   (1) Disconnect the clips using a flat tip screwdriver.

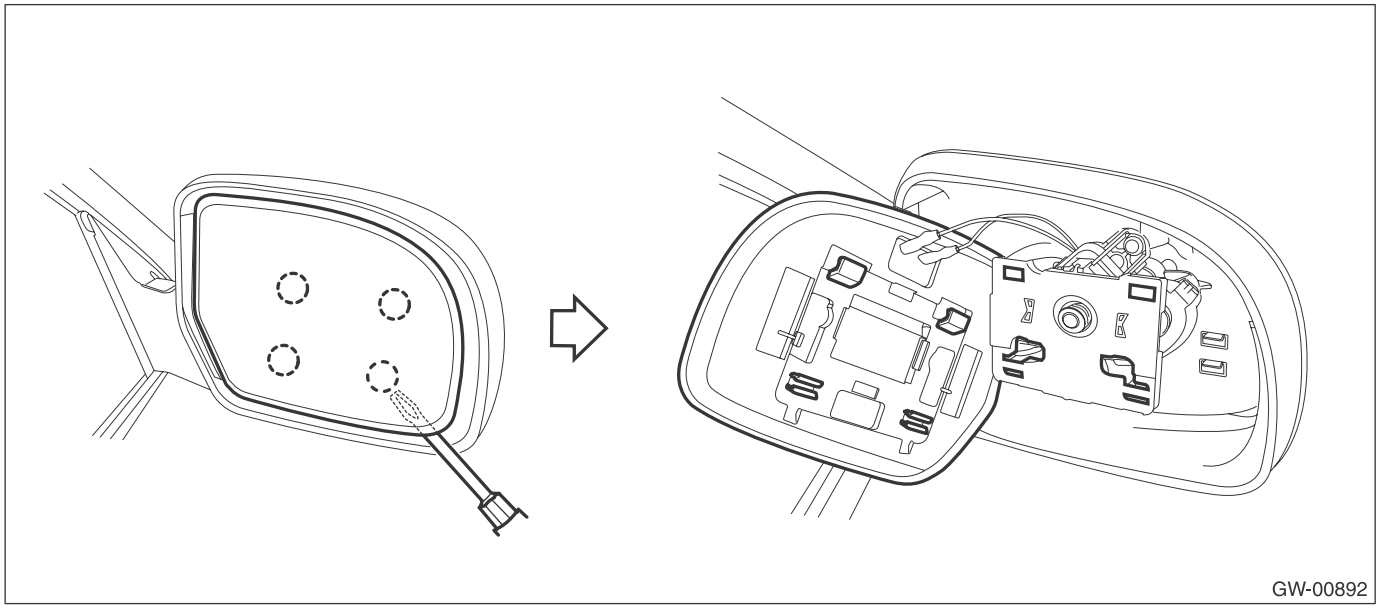

   (2) Disconnect the mirror heater connector. (Model with mirror heater)

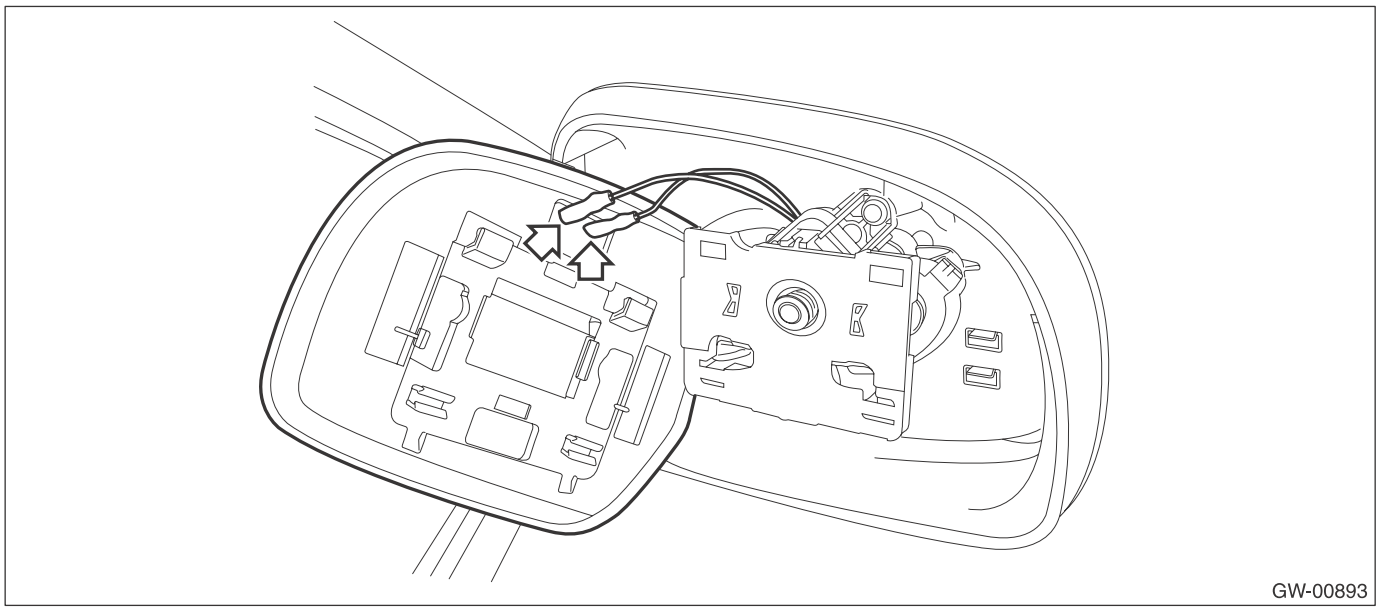

4) Install the outer mirror in the reverse order of removal.

2. MODEL WITH RETRACTABLE MIRROR

CAUTION:
- **When removing the mirror, be careful not to damage the back surface of mirror with a flat tip screwdriver.**
- **When installing the mirror, insert the connector and clip securely.**

1) Operate the remote control mirror switch to face the mirror surface upward.
2) Disconnect the ground cable from battery.
3) Remove the outer mirror.
   (1) Disconnect the clips using a flat tip screwdriver.

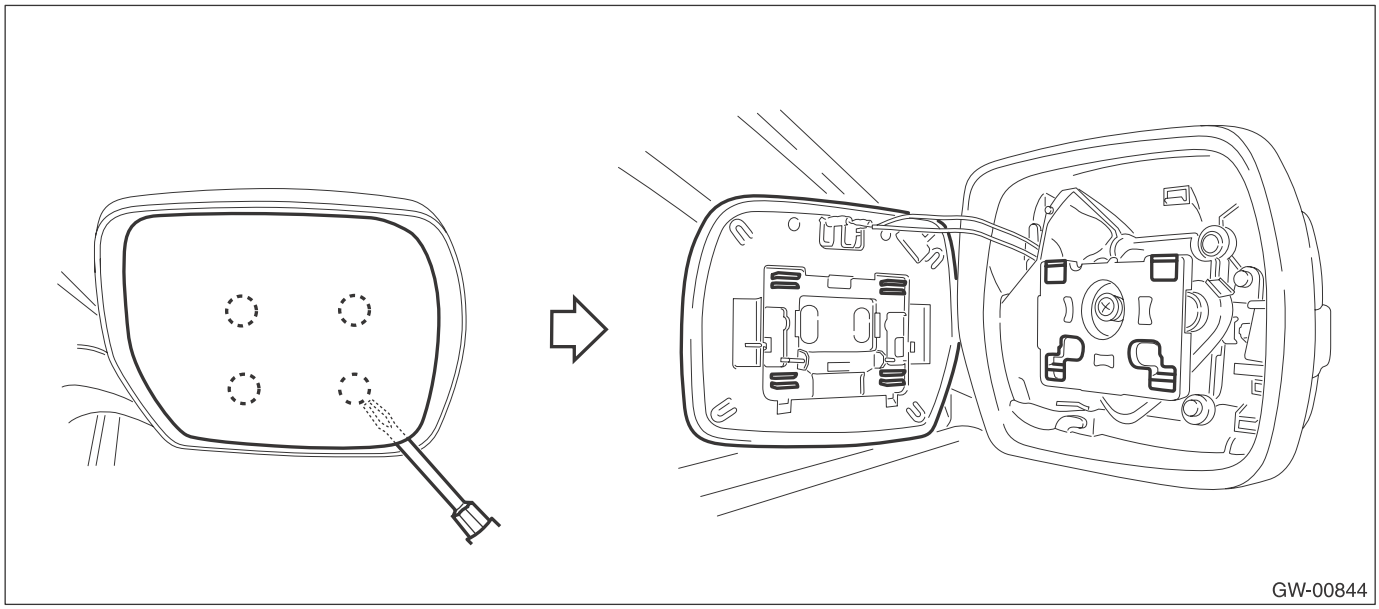
GW-00844

   (2) Disconnect the mirror heater connector. (Model with mirror heater)

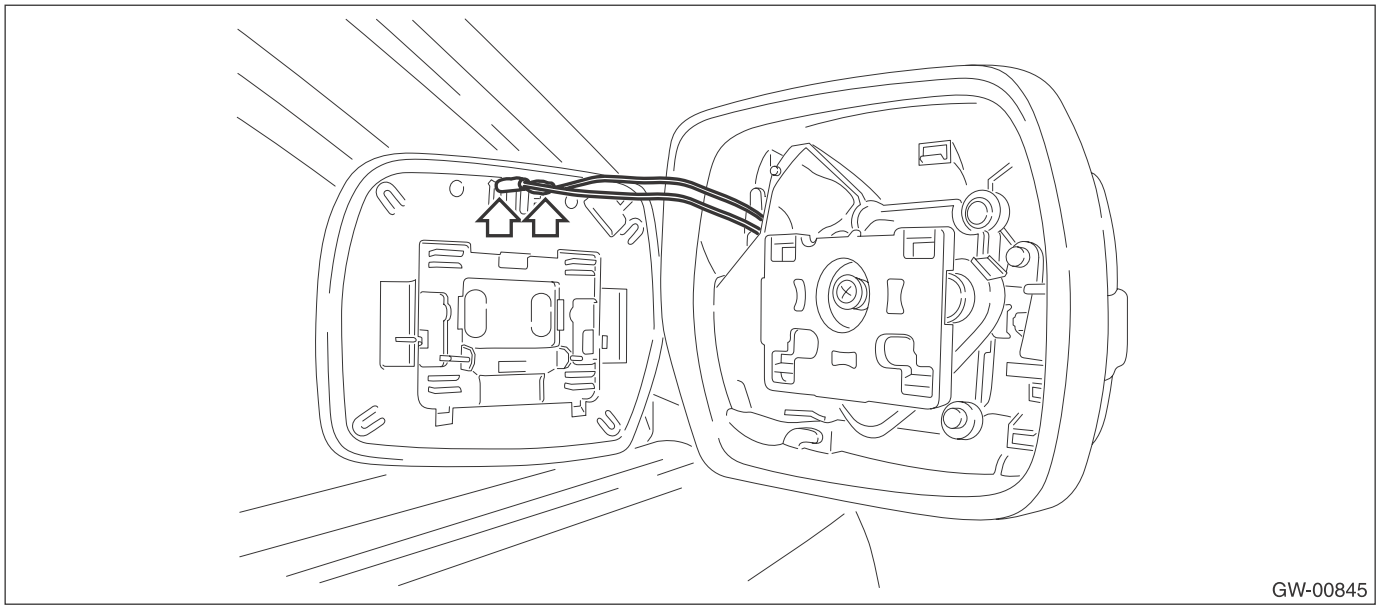
GW-00845

4) Install the outer mirror in the reverse order of removal.

11.Remote Control Mirror Switch

A: REMOVAL

1) Remove the instrument panel lower cover. <Ref. to EI-63, REMOVAL, Instrument Panel Lower Cover.>
2) Disconnect the claws and then remove the remote control mirror switch.

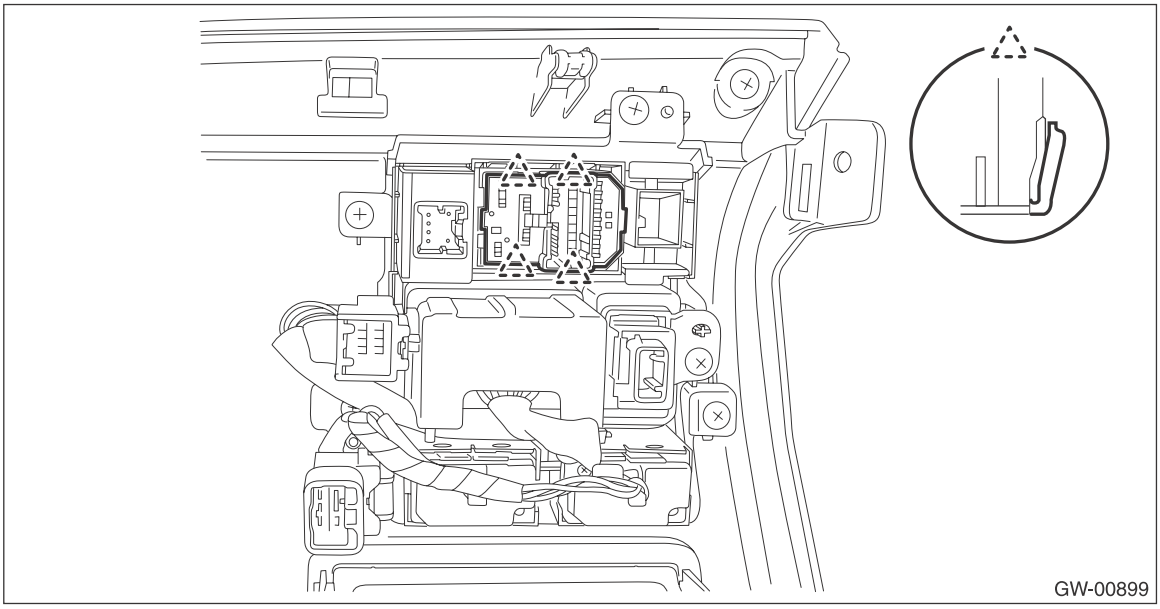

B: INSTALLATION

Install each part in the reverse order of removal.

C: INSPECTION

1) Disconnect the remote control mirror switch connector.
2) Check the resistance between remote control mirror switch terminals.

Preparation tool: Circuit tester

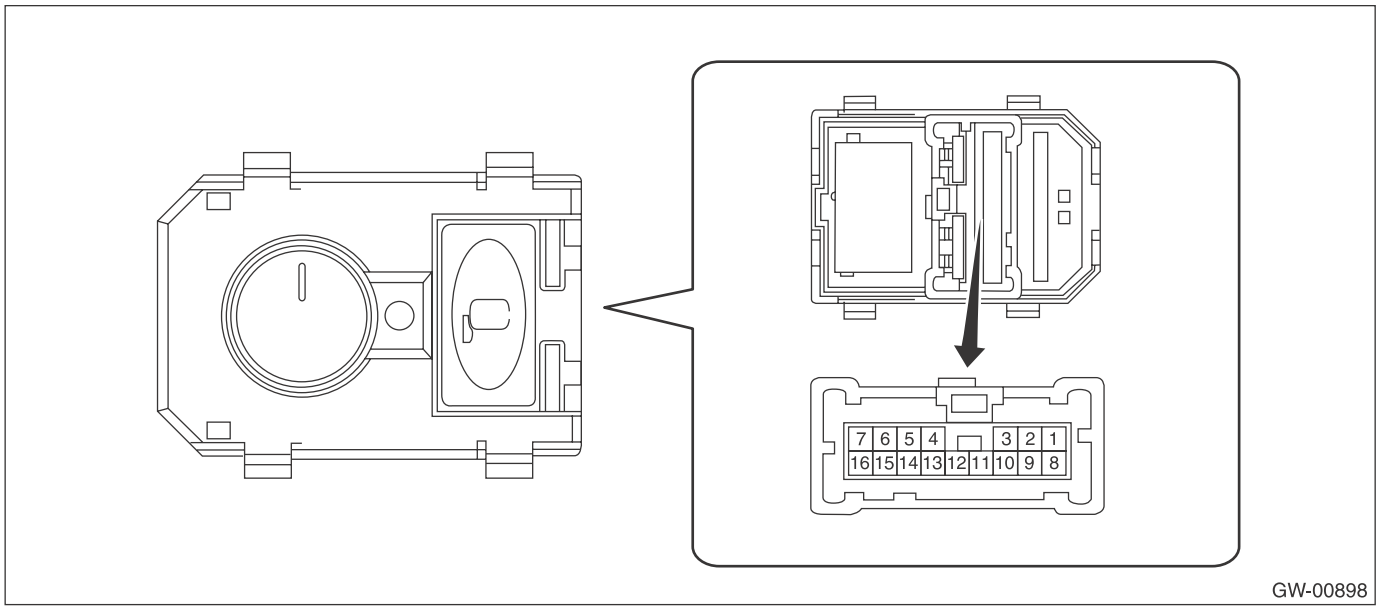

- Changeover switch RH

Terminal No.	Inspection conditions	Specification
—	OFF	1 MΩ or more
1 — 12 11 — 7	UP	Less than 1 Ω
1 — 11 12 — 7	DOWN	Less than 1 Ω
1 — 9 12 — 7	LEFT	Less than 1 Ω
1 — 12 9 — 7	RIGHT	Less than 1 Ω

- Changeover switch LH

Terminal No.	Inspection conditions	Specification
—	OFF	1 MΩ or more
1 — 14 10 — 7	UP	Less than 1 Ω
1 — 10 14 — 7	DOWN	Less than 1 Ω
1 — 8 14 — 7	LEFT	Less than 1 Ω
1 — 14 8 — 7	RIGHT	Less than 1 Ω

- Folding switch (model with retractable mirror)

Terminal No.	Inspection conditions	Specification
—	OFF	1 MΩ or more
1 — 5 2 — 7	Folding (LH)	Less than 1 Ω
1 — 6 3 — 7	Folding (RH)	Less than 1 Ω
1 — 2 5 — 7	Unfolding (LH)	Less than 1 Ω
1 — 3 6 — 7	Unfolding (RH)	Less than 1 Ω

3) Replace the remote control mirror switch if the inspection result is not within the standard value.

12.Rear Door Glass

A: REMOVAL

1) Remove the rear door trim. <Ref. to EI-61, REAR DOOR, REMOVAL, Door Trim.>
2) Remove the sealing cover.

CAUTION:
- **Carefully remove the butyl tape. Excessive force will easily break the cover.**
- **If cover gets broken, replace it with a new part.**

3) Attach the battery ground cable and power window switch and turn the ignition to ON.
4) Remove the rear door glass.
   (1) Operate the power window switch to move the rear door glass to the lowest position where the mounting bolts can be seen.
   (2) Remove the screw and bolt and remove the door sash.

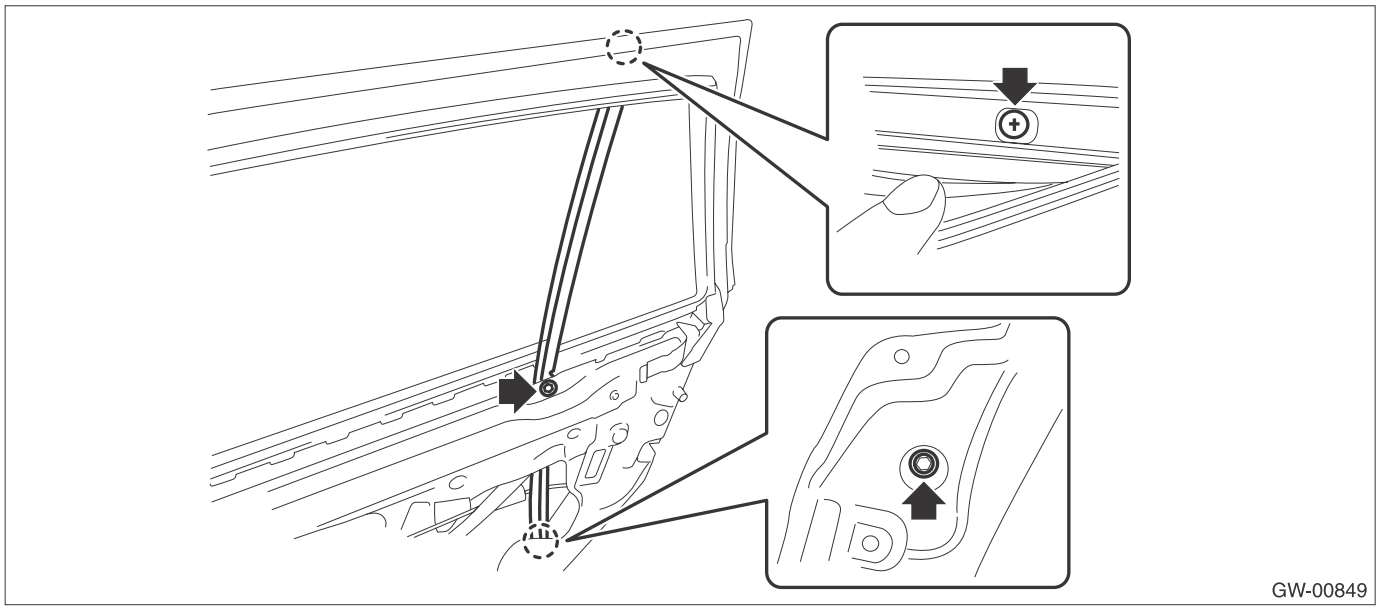
GW-00849

(3) Remove the bolt.

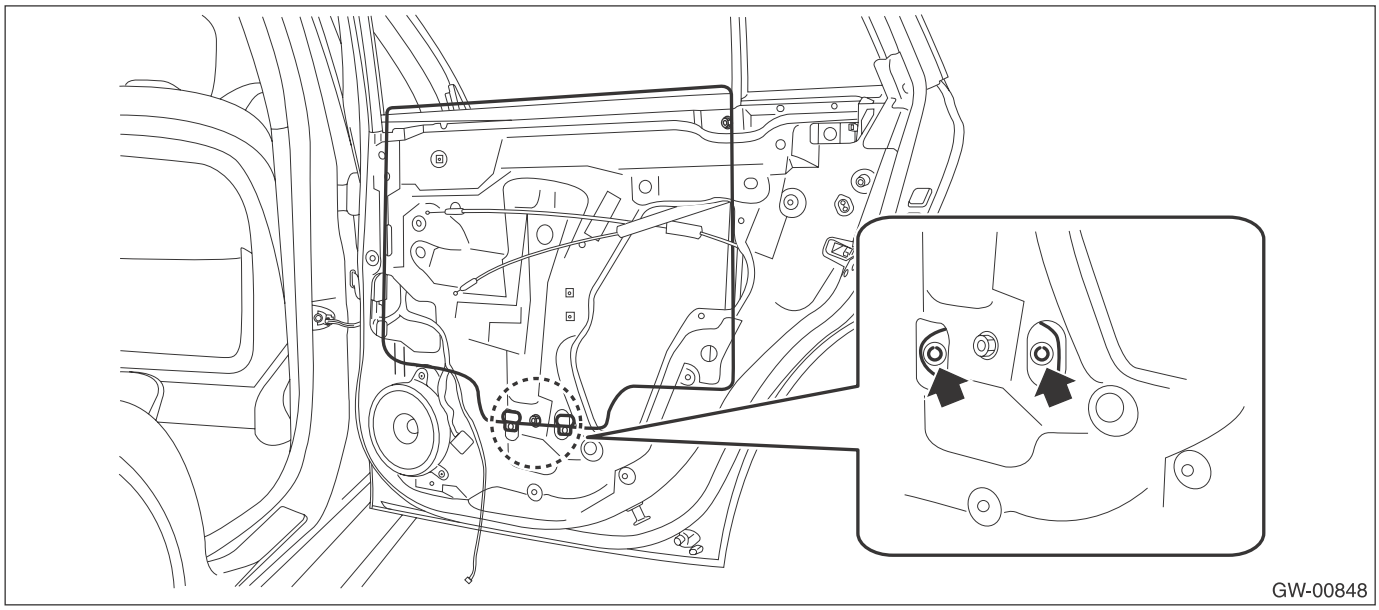
GW-00848

(4) Remove the rear door glass.

CAUTION:
Avoid impact and damage to the glass.

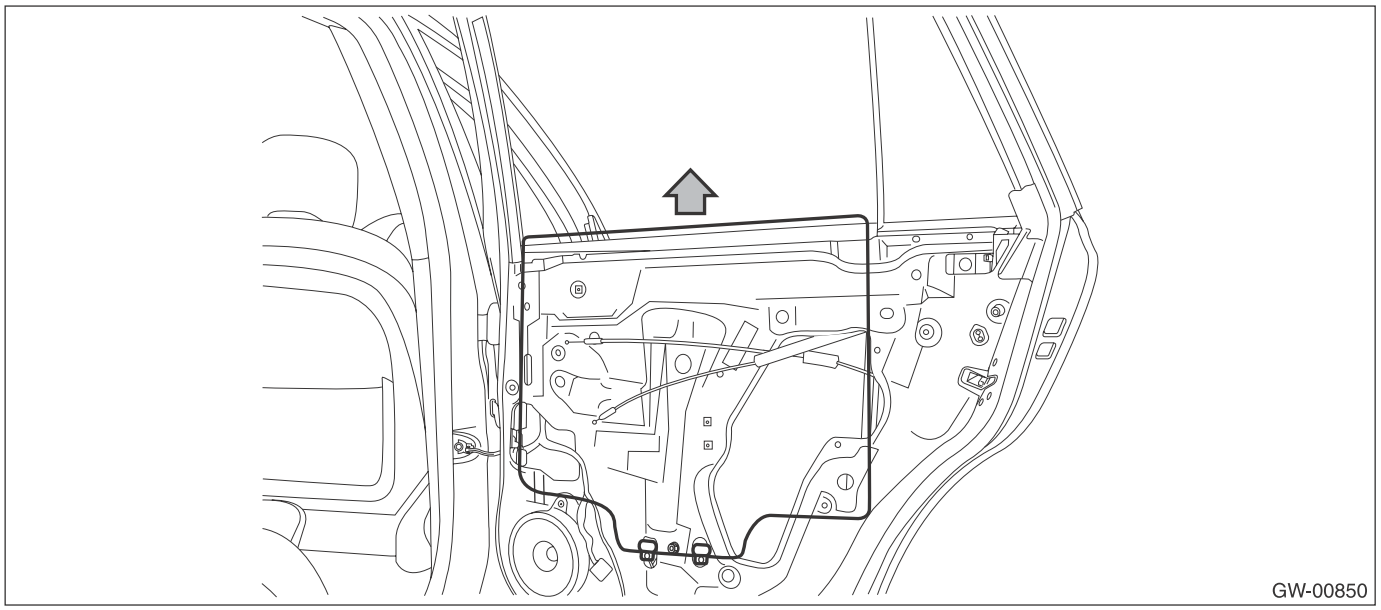

B: INSTALLATION

CAUTION:
Make sure that the glass run rubber is placed securely in the door frame and sash.
Install each part in the reverse order of removal.

Tightening torque:
Refer to "COMPONENT" of "General Description". <Ref. to GW-5, REAR DOOR GLASS, COMPONENT, General Description.>

13.Rear Regulator and Motor Assembly

A: REMOVAL

1) Remove the rear door glass. <Ref. to GW-32, REMOVAL, Rear Door Glass.>
2) Remove the rear regulator and motor assembly.
   (1) Disconnect the connector.
   (2) Remove the six bolts to remove the rear regulator and motor assembly.

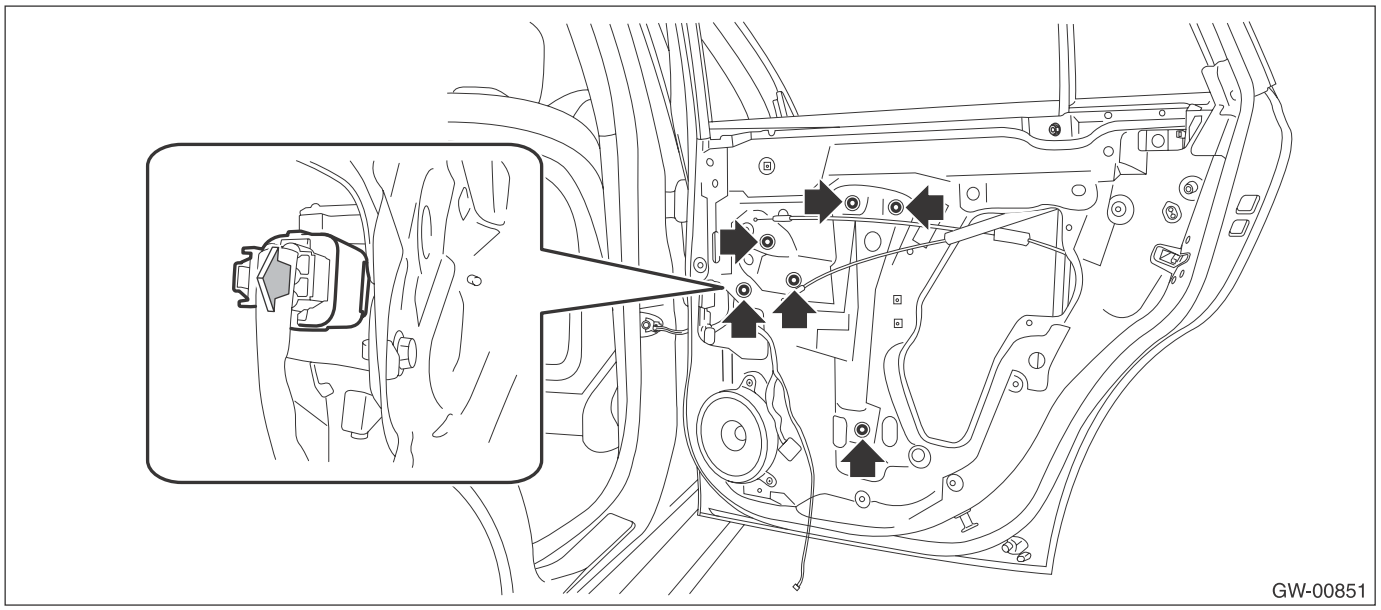

B: INSTALLATION

Install each part in the reverse order of removal.

Tightening torque:
Refer to "COMPONENT" of "General Description". <Ref. to GW-5, REAR DOOR GLASS, COMPONENT, General Description.>

C: INSPECTION

1) Disconnect the motor connector.
2) Apply battery voltage between the motor connector terminals and check the motor operation.

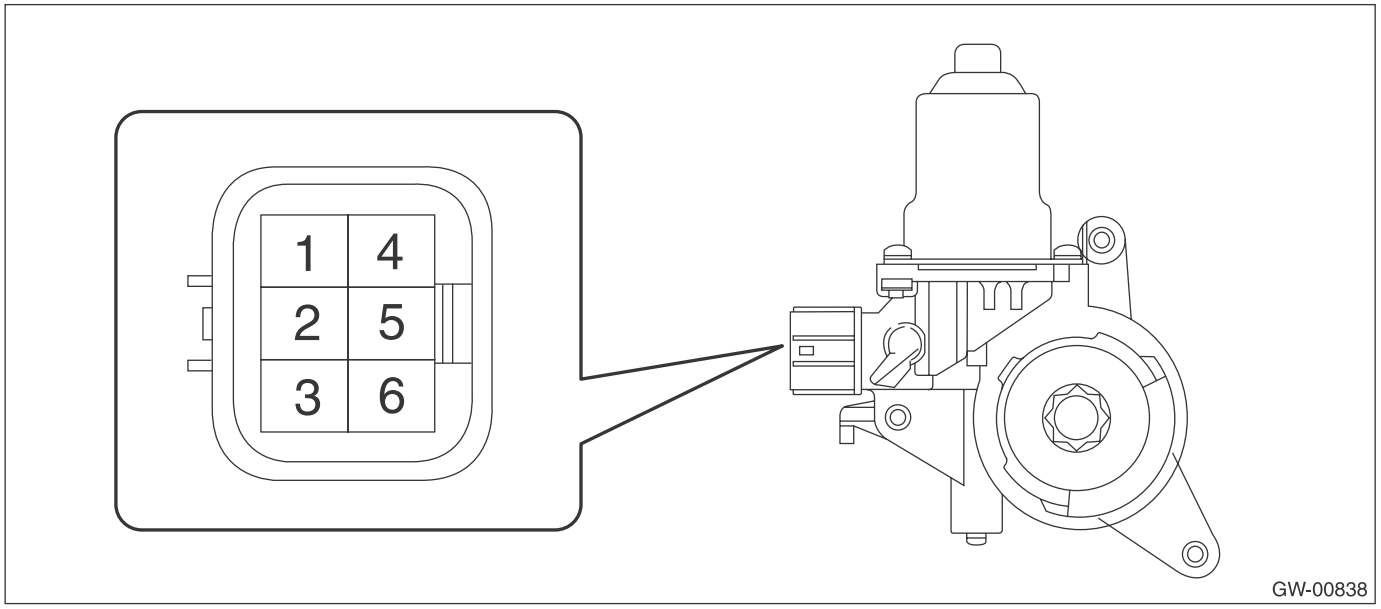

- RH side

Terminal No.	Inspection conditions	Specification
1 (+) — 4 (–)	Apply battery voltage between terminals.	Increase
4 (+) — 1 (–)	Apply battery voltage between terminals.	Decrease

- LH side

Terminal No.	Inspection conditions	Specification
3 (+) — 6 (–)	Apply battery voltage between terminals.	Increase
6 (+) — 3 (–)	Apply battery voltage between terminals.	Decrease

3) If the inspection results in improper operation, replace the rear regulator and motor assembly.

14.Windshield Glass

A: REMOVAL

1. USING WINDSHIELD GLASS KNIFE

1) Disconnect the ground cable from battery. (Models with wiper deicer)
2) Remove the front pillar trim. <Ref. to EI-101, REMOVAL, Upper Inner Trim.>
3) Disconnect the wiper deicer connector. (Models with wiper deicer)
4) Remove the cowl panel. <Ref. to EI-32, REMOVAL, Cowl Panel.>
5) Remove the molding from the glass and tape the body side of the circumference of windshield glass for protection.

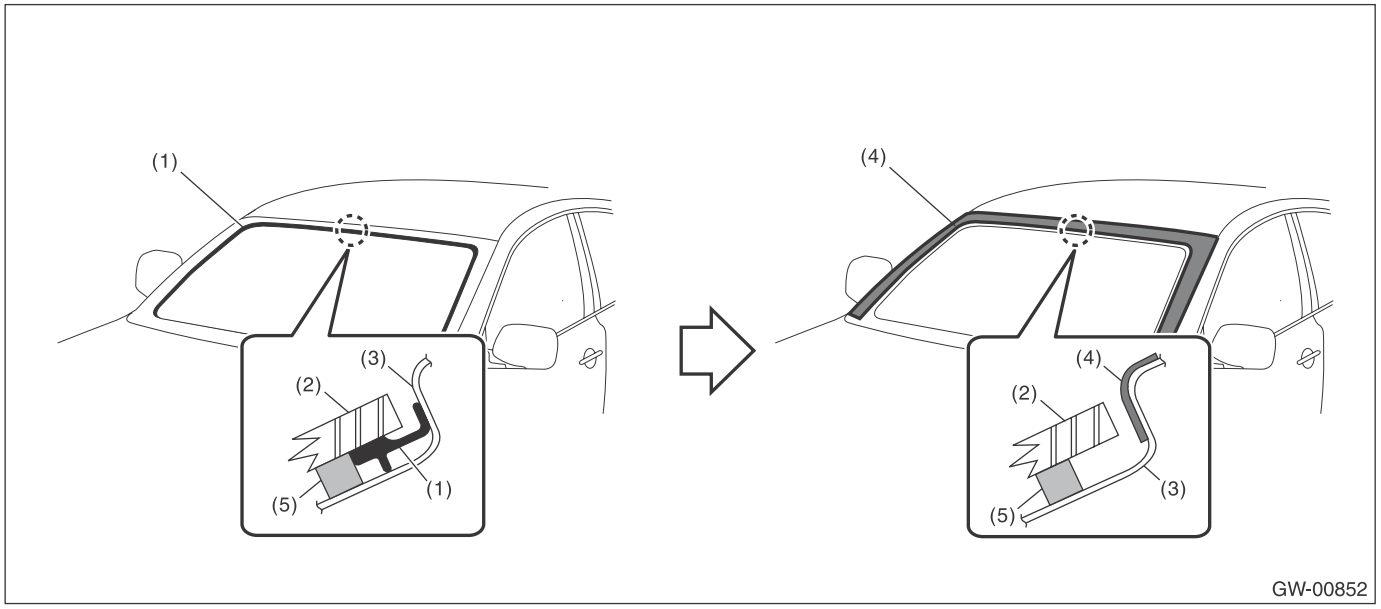

(1) Molding
(2) Windshield glass
(3) Body panel
(4) Protective tape
(5) Adhesive

6) Remove the windshield glass.
(1) Apply sufficient amount of soapy water to the adhesive part and insert the windshield glass knife.
(2) While holding the knife edge and windshield glass edge at a right angle, move the windshield glass knife parallel to the windshield glass edge along the surface and edge of windshield glass to cut the adhesive.

CAUTION:
- **Cutting of adhesive part should be started with wider gap between windshield glass and body.**
- **Never twist the windshield glass knife.**

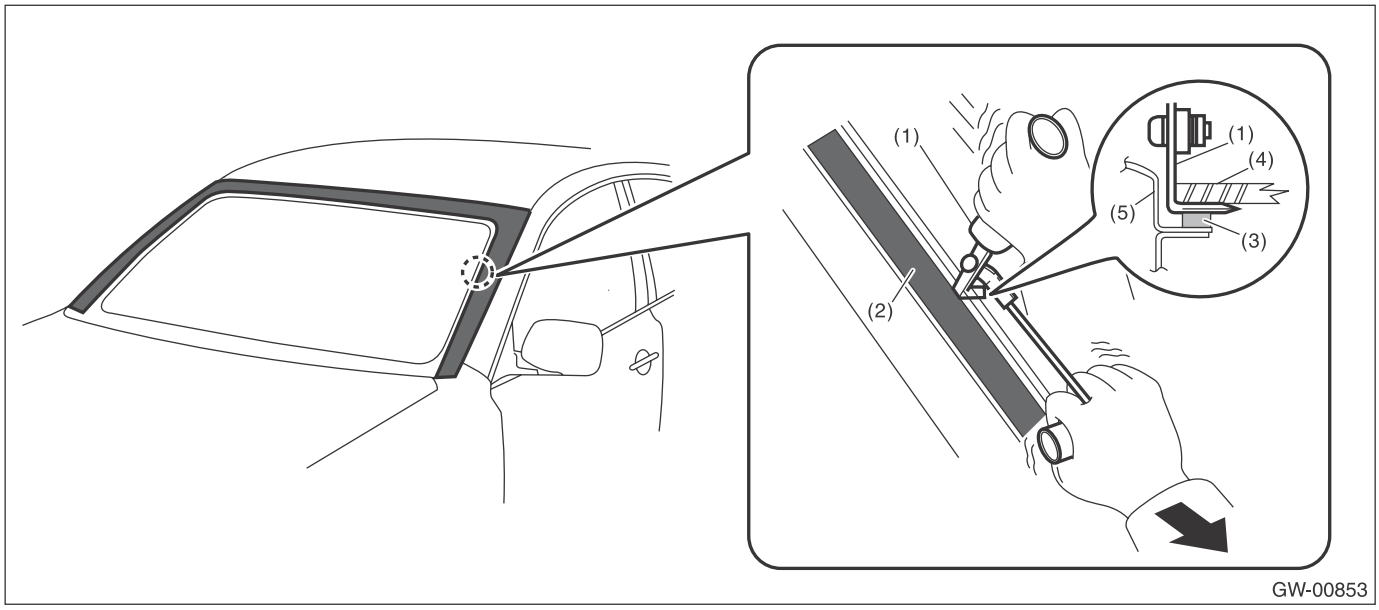

(1) Windshield glass knife
(2) Protective tape
(3) Adhesive
(4) Windshield glass
(5) Body panel

(3) Disconnect the locating pin and remove the windshield glass.

NOTE:
The locating pins are bonded to the corners of glass. Use piano wire to disconnect the pins.

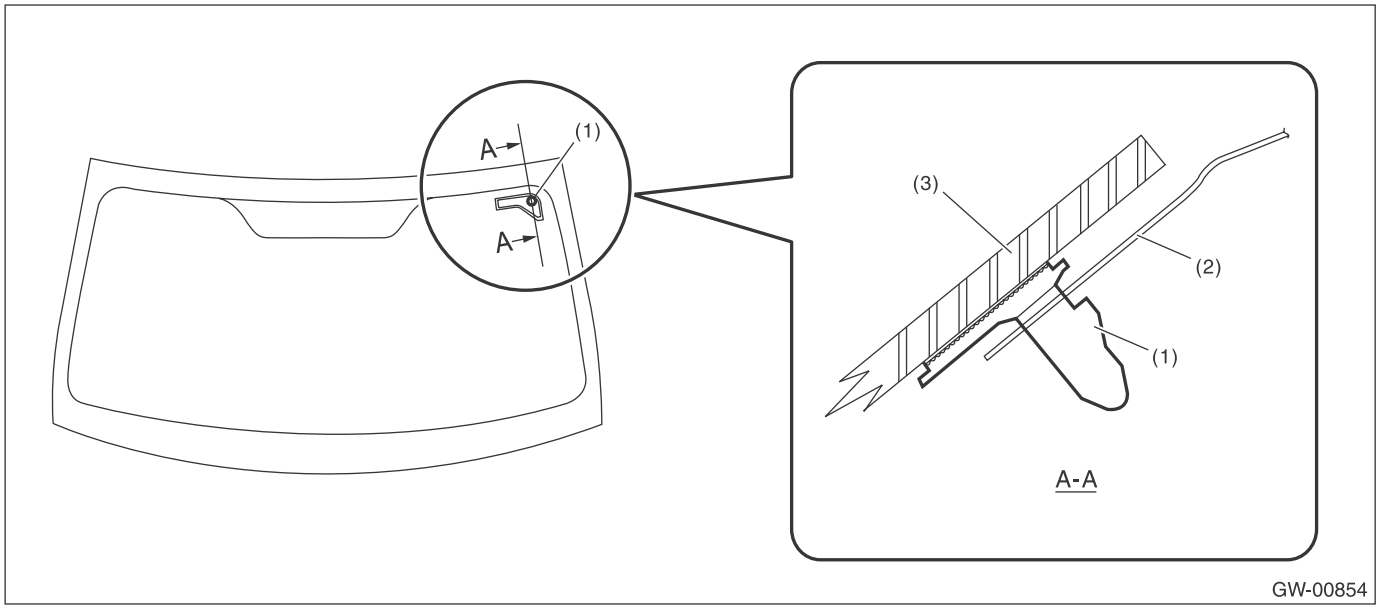

(1) Locating pin
(2) Body panel
(3) Windshield glass

2. USING PIANO WIRE

CAUTION:
- **Do not tightly pull the piano wire against the windshield glass edge.**
- **Apply protective tape, etc., and be careful not to damage interior and exterior parts.**
- **Do not cross piano wires. Otherwise they may be cut.**

1) Disconnect the ground cable from battery. (Models with wiper deicer)
2) Remove the front pillar trim. <Ref. to EI-101, REMOVAL, Upper Inner Trim.>
3) Disconnect the wiper deicer connector. (Models with wiper deicer)
4) Remove the cowl panel. <Ref. to EI-32, REMOVAL, Cowl Panel.>
5) Remove the molding from the glass and tape the body side of the circumference of windshield glass for protection.

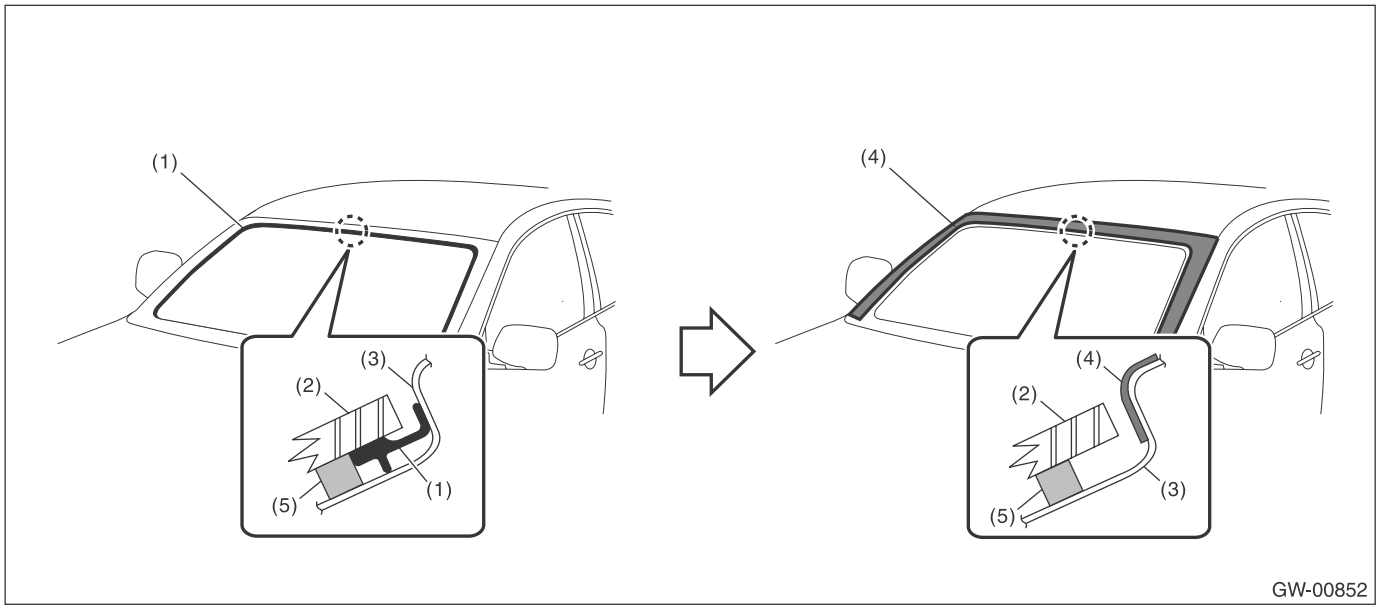

(1) Molding
(2) Windshield glass
(3) Body panel
(4) Protective tape
(5) Adhesive

6) Remove the windshield glass.
(1) Using a drill, make a hole in the adhesive part.
(2) Pass the piano wire through the hole, and pull the wire ends alternately to cut off the adhesive part and locating pin.

CAUTION:
Attach a piece of wood to both piano wire ends.

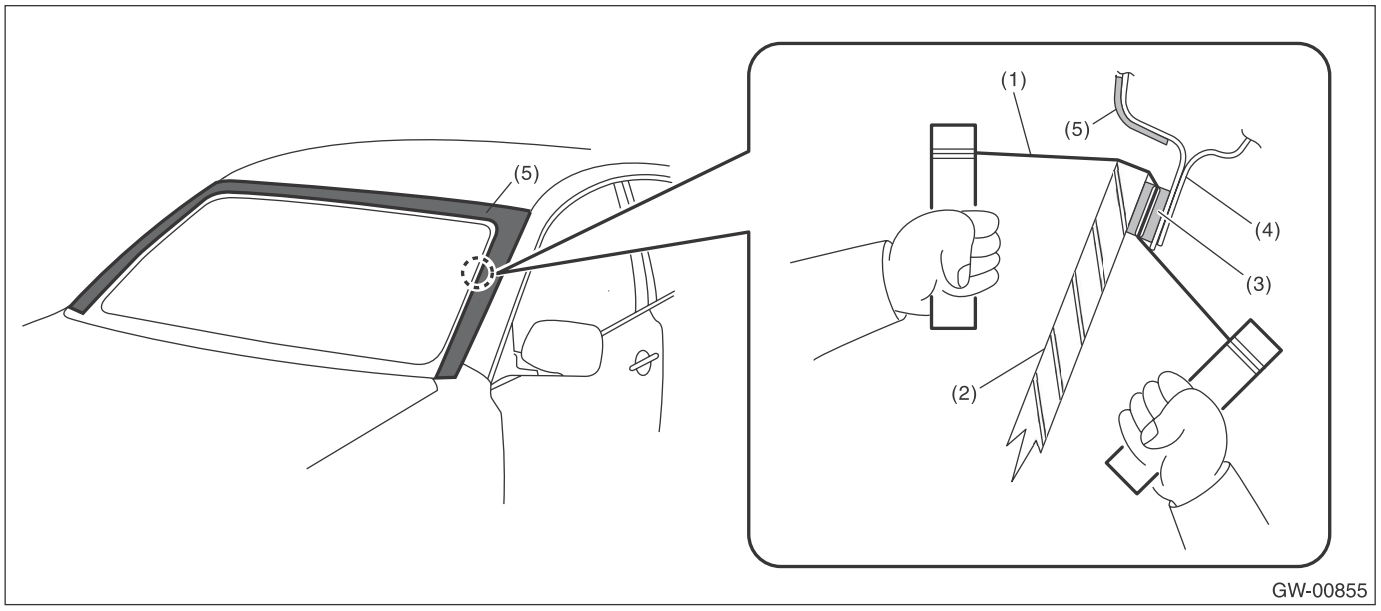

(1) Piano wire
(2) Windshield glass
(3) Adhesive
(4) Body panel
(5) Protective tape

B: INSTALLATION

1) Cut the cartridge nozzle tip as shown in the figure, and set the adhesive in the sealant gun.

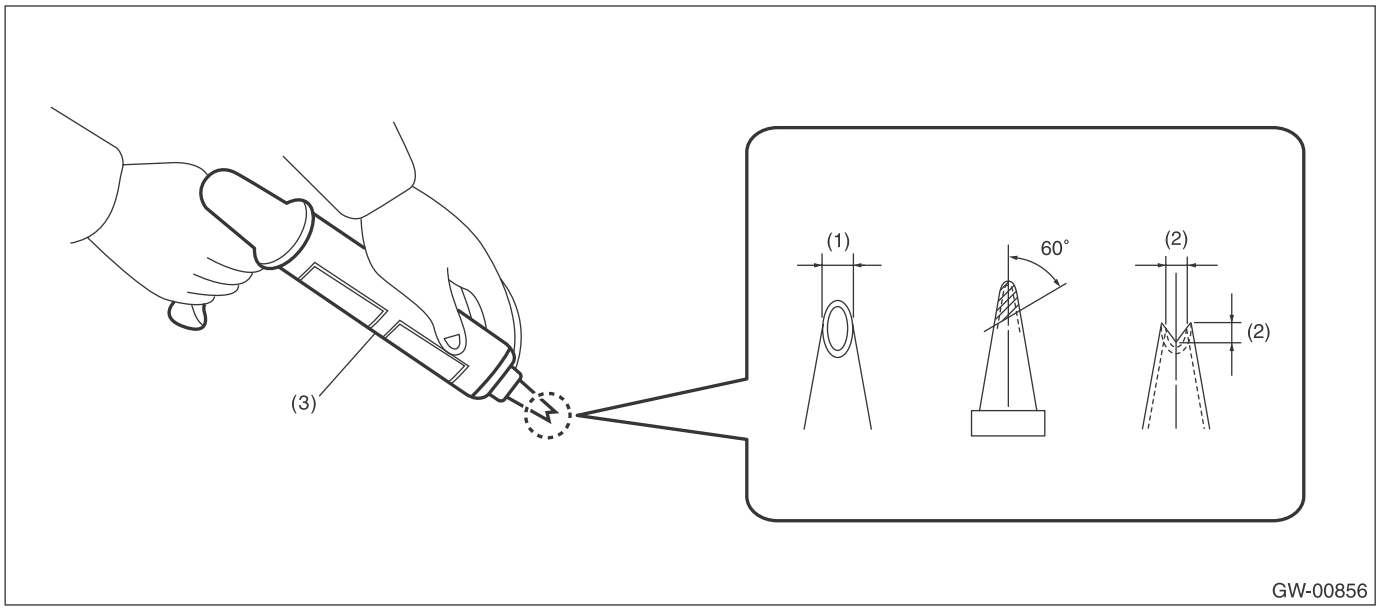

(1) 10 mm (0.39 in)
(2) 8 mm (0.31 in)
(3) Sealant gun

2) Remove the adhesive layer on the body using cutter knife to obtain smooth face of 2 mm (0.08 in) thick.

CAUTION:
- **Be careful not to damage the body and paint surface.**
- **Be sure to keep some of old adhesive.**

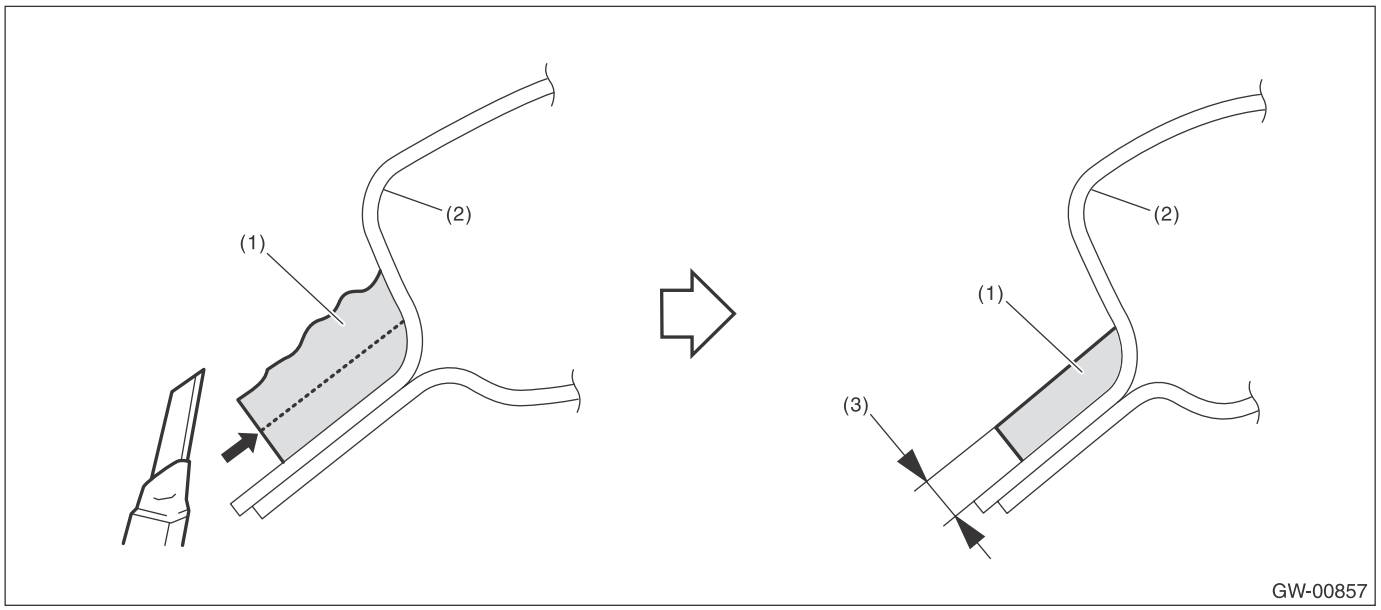

(1) Adhesive (2) Body panel (3) 2 mm (0.08 in)

3) Clean the glass and body with alcohol or white gasoline to eliminate cutting powder, dust and dirt completely.
4) Attach the dam rubber to the glass.

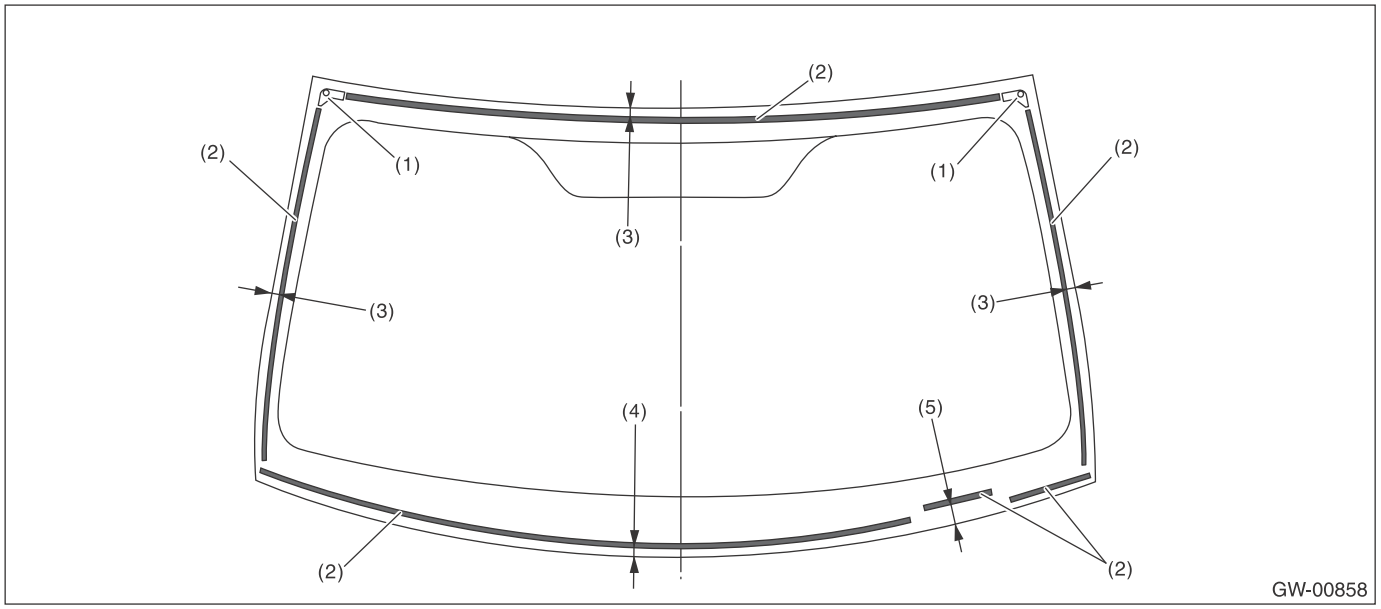

(1) Locating pin (3) 15 mm (0.59 in) (5) 23.5 mm (0.92 in)
(2) Dam rubber (4) 13.5 mm (0.53 in)

5) Attach the molding to the glass.

CAUTION:
Be careful to attach the molding so that the molding has no loose or undulating part.

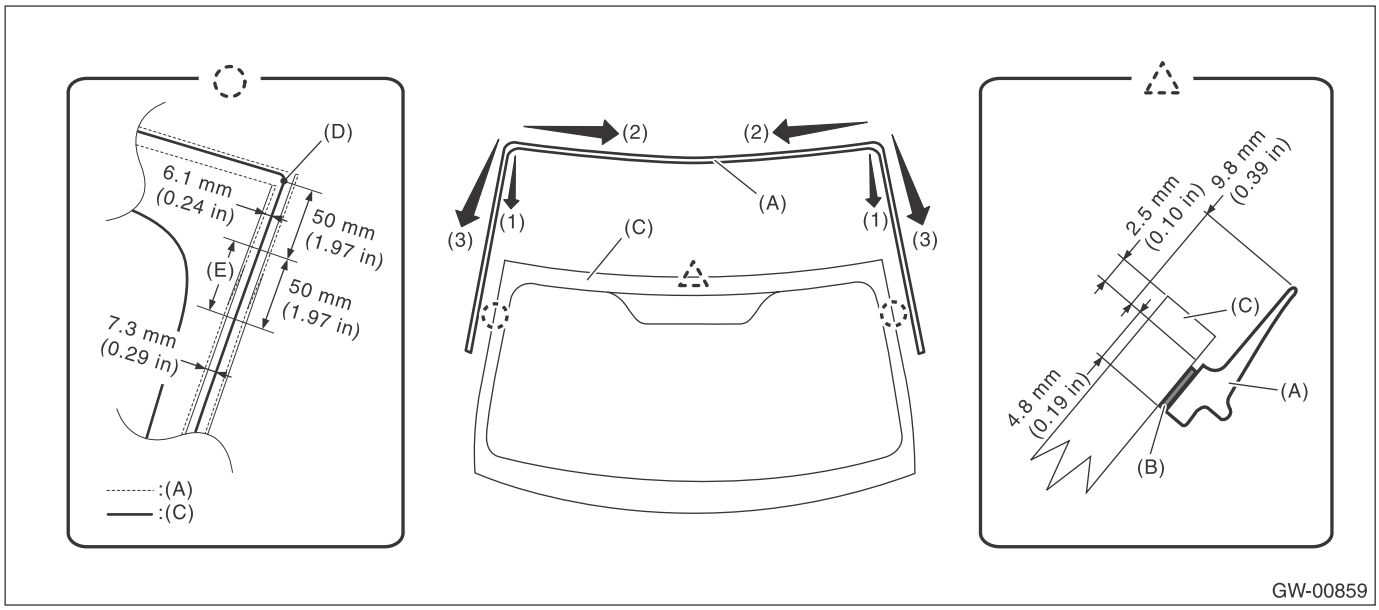

(1) Align the molding (A) to the upper ends of the windshield glass (C).
(2) Attach the molding from the upper corners towards the center.
(3) Attach the molding from the upper corners downward.

NOTE:
Change the molding installation width within the gradual change range (E) based on the curve end point on the upper end of side area (D).

(4) Firmly apply the double sided tape (B) of the molding evenly to the glass surface.

6) Install the windshield glass.
(1) Using a sponge, apply primer to the glass side and body side adhesive surfaces.

Glass primer:
Dow Automotive's
ESSEX U-401, U-402 or equivalent

Painted surface primer:
Dow Automotive's
ESSEX U-413 or equivalent

NOTE:
- Primer once attached to the painted surface of the body and internal trim is hard to wipe off. Mask the circumference of such area.
- Let primer dry for about ten minutes before installing the glass.
- Do not touch the surface coated with primer.

(2) Apply adhesive to the glass end back surface.

Adhesive:
Dow Automotive's
ESSEX U-400HV or equivalent

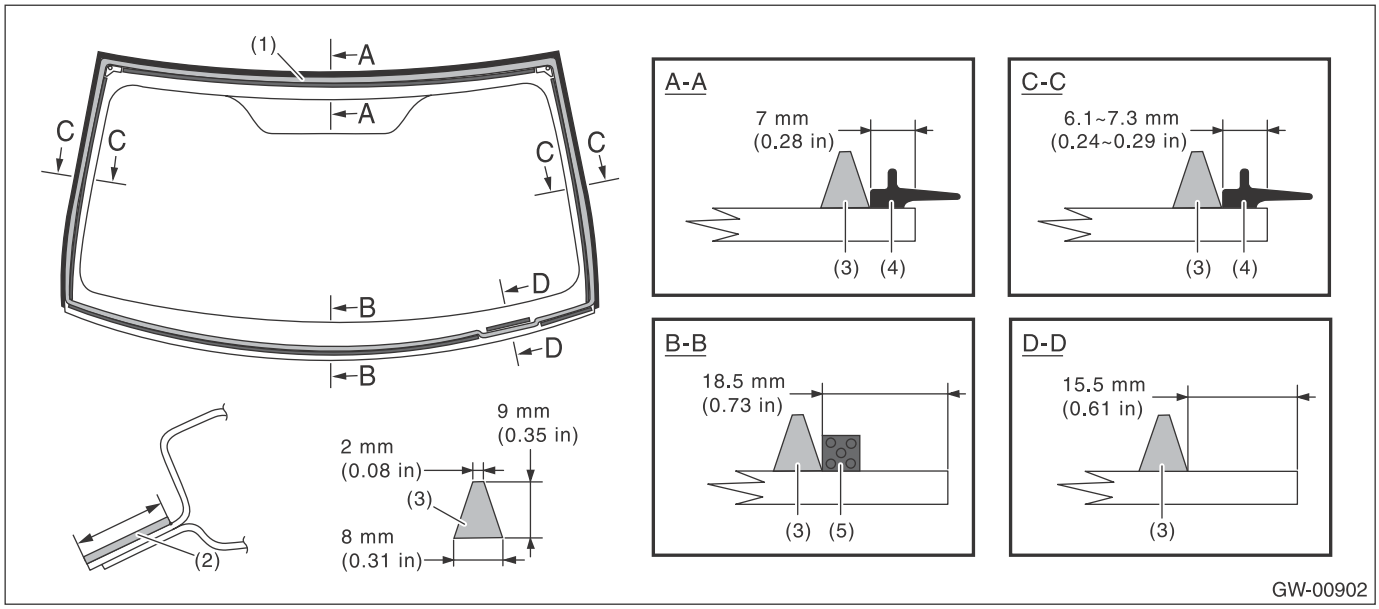

(1) Application of primer (glass side)
(2) Application of primer (body side)
(3) Adhesive
(4) Molding
(5) Dam rubber

(3) Using suction rubber cups, fit the locator pins into the body side, and attach the windshield glass.

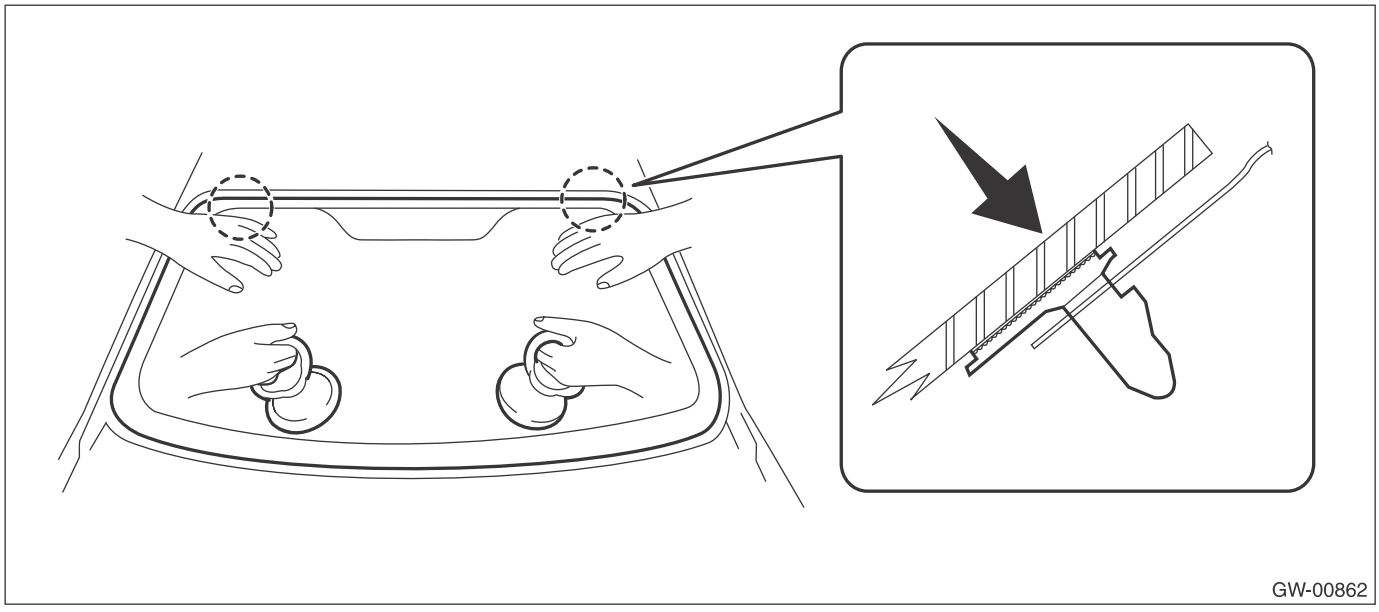

(4) Lightly press the entire perimeter of windshield glass for tight fit.
(5) Make flush the adhesive surface jutted out using spatula.

7) After completion of all work, allow the vehicle to stand for about 24 hours.

NOTE:
• When door is opened/closed after glass is bonded, always lower the door glass first, and then open/close it carefully.
• Move the vehicle slowly.
• For minimum drying time and vehicle standing time before driving after bonding, follow instructions or instruction manual from the adhesive manufacturer.

8) After curing of adhesive, pour the water on external surface of vehicle to check that there are no water leaks.

NOTE:
When a vehicle is returned to the user, tell him or her that the vehicle should not be subjected to heavy impact for at least three days.

9) Install the cowl panel. <Ref. to EI-34, INSTALLATION, Cowl Panel.>
10) Connect the wiper deicer connector. (Models with wiper deicer)
11) Install the front pillar trim. <Ref. to EI-106, INSTALLATION, Upper Inner Trim.>

15.Rear Gate Glass

A: REMOVAL

1) Disconnect the ground cable from battery.
2) Remove the rear gate trim. <Ref. to EI-160, REMOVAL, Rear Gate Trim.>
3) Remove the rear gate garnish. <Ref. to EI-164, REMOVAL, Rear Gate Garnish.>
4) Remove the rear wiper motor. <Ref. to WW-38, REMOVAL, Rear Wiper Motor.>
5) Disconnect the rear defogger connector and radio antenna connector.
6) Remove the rear gate in the same procedure as for windshield glass. <Ref. to GW-36, REMOVAL, Windshield Glass.>

B: INSTALLATION

NOTE:
When applying adhesive and installing the dam rubber and molding, refer to Ag printing as a mark.

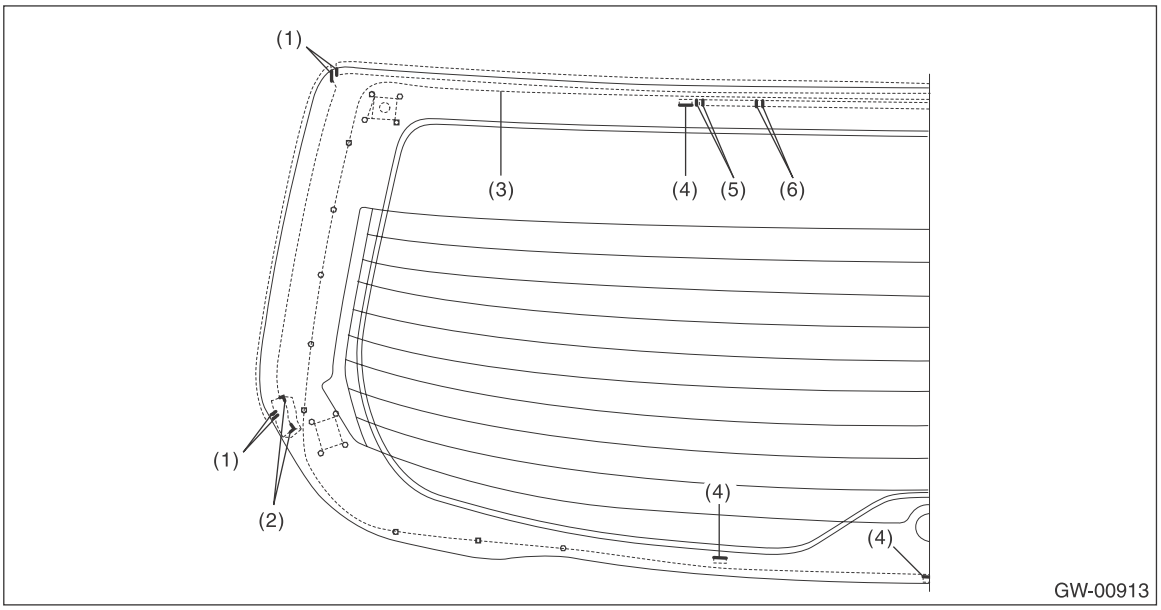

(1) Molding edge
(2) EPT SEALER edge
(3) Adhesive line
(4) Spacer edge
(5) Dam rubber edge (LH)
(6) Dam rubber edge (RH)

1) Cut the cartridge nozzle tip as shown in the figure, and set the adhesive in the sealant gun.

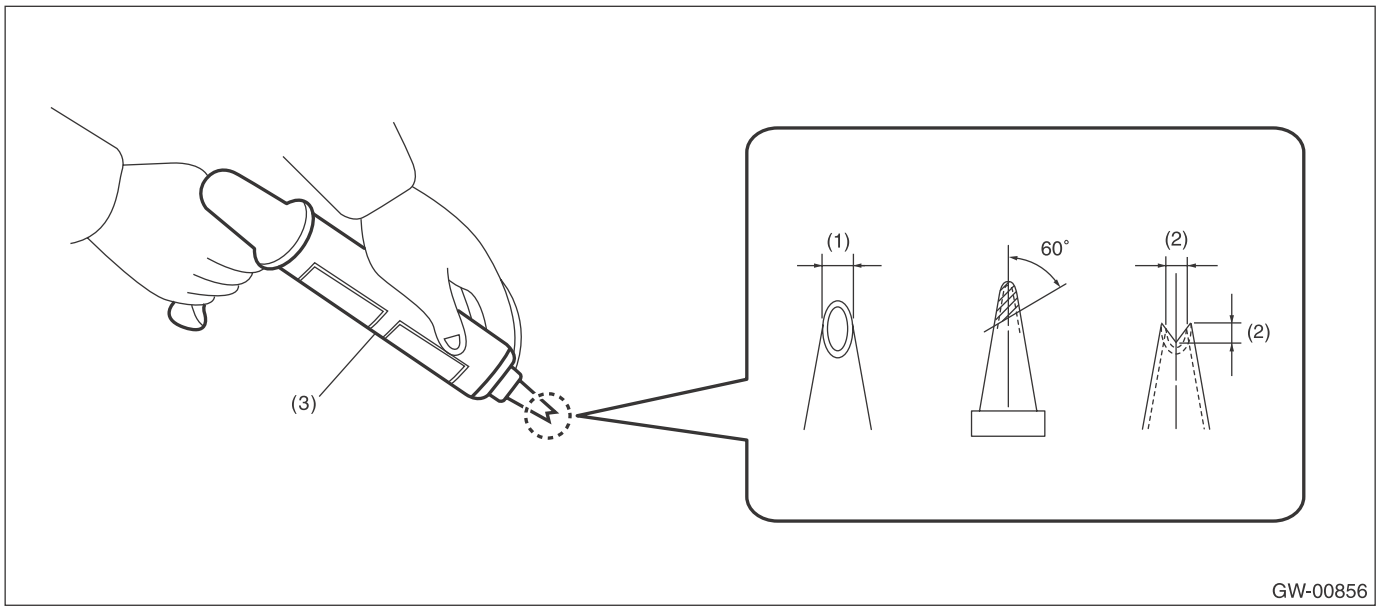

(1) 10 mm (0.39 in) (2) 8 mm (0.31 in) (3) Sealant gun

2) Prepare and clean the adhesion surfaces of the glass and body using the same procedures as for the windshield glass. <Ref. to GW-39, INSTALLATION, Windshield Glass.>
3) Attach the dam rubber to the glass.

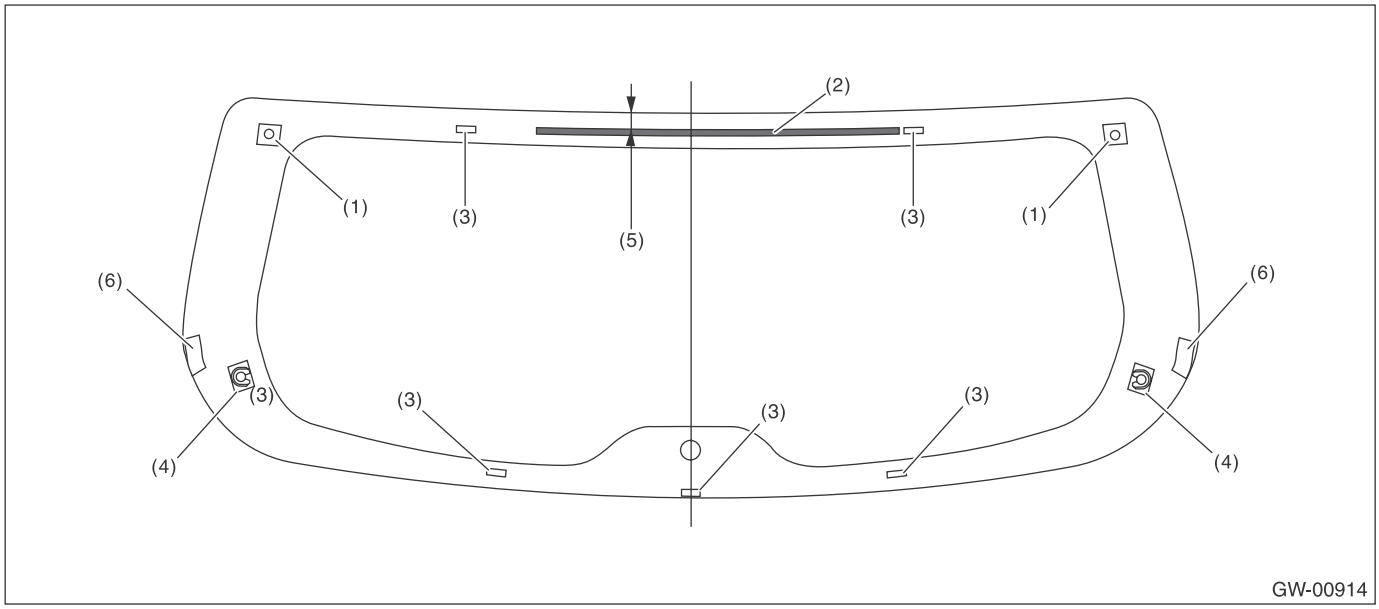

(1) Locating pin (3) SPACER (5) 15 mm (0.59 in)
(2) Dam rubber (4) HOLDER (6) EPT sealer

4) Attach the molding to the glass.

CAUTION:
Be careful to attach the molding so that the molding has no loose or undulating part.

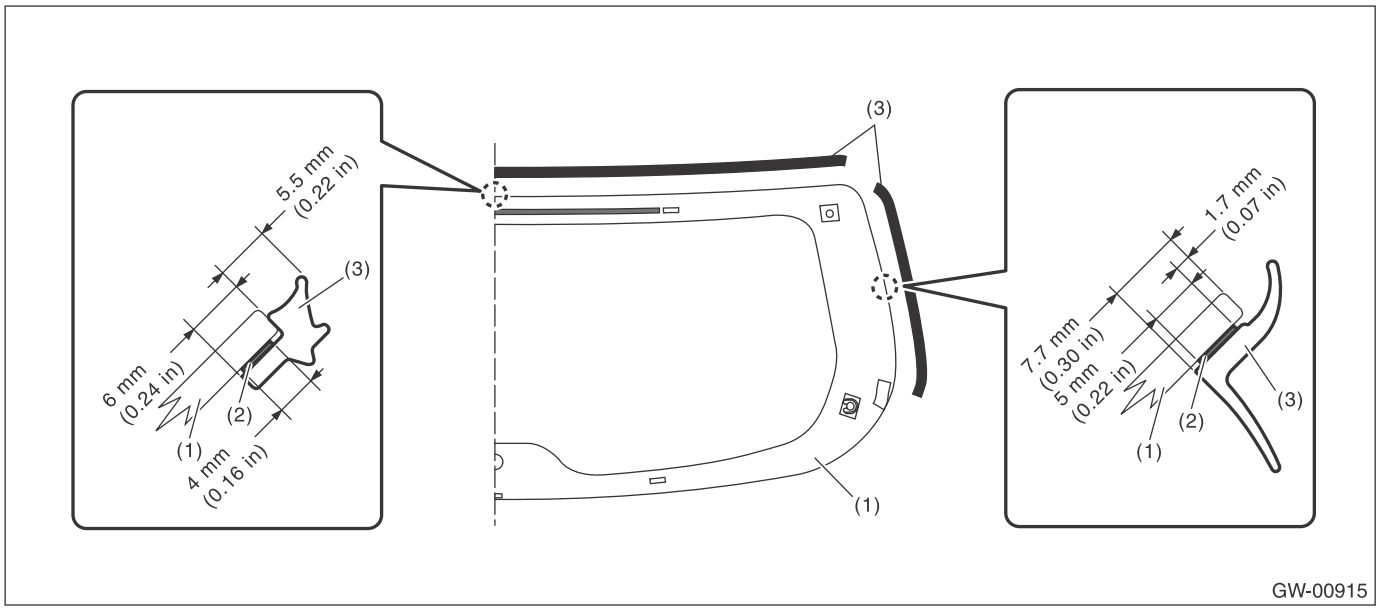

(1) Rear gate glass (2) Double-sided tape (3) Molding

5) Install the rear gate glass.
(1) Using a sponge, apply primer to the glass side and body side adhesive surfaces.
(2) Apply adhesive to the glass end back surface.

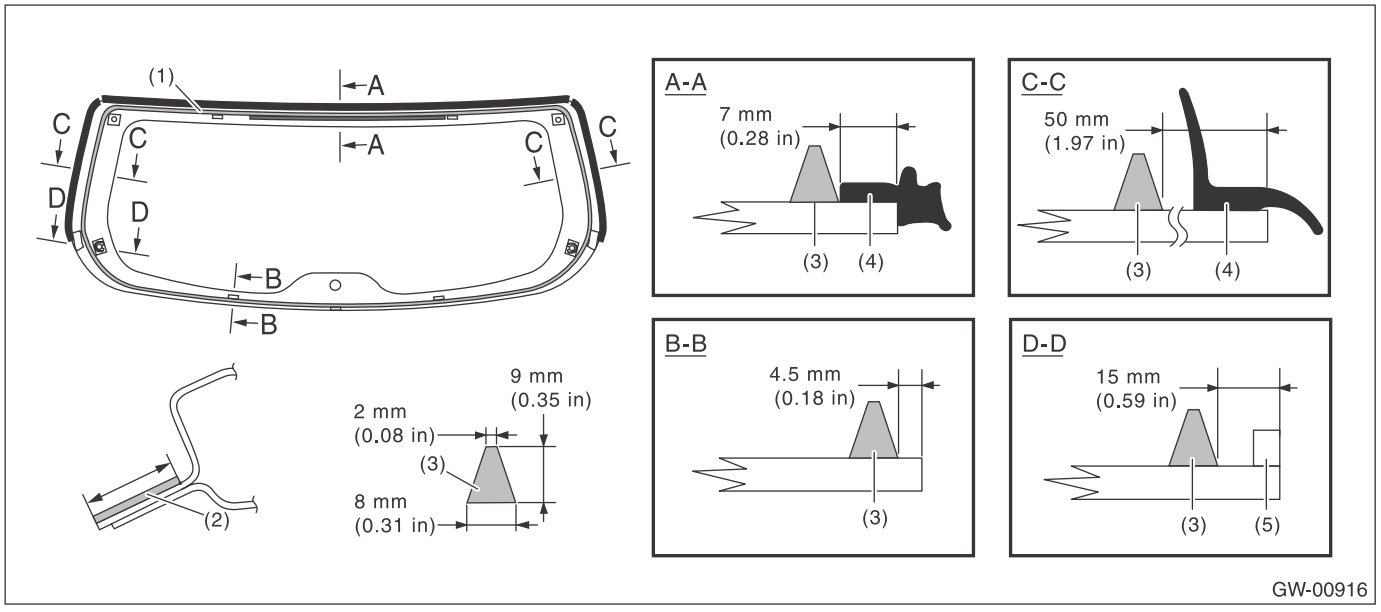

(1) Application of primer (glass side) (3) Adhesive (5) EPT sealer
(2) Application of primer (body side) (4) Molding

(3) Attach the clip to the rear gate glass holder.
(4) Insert the glass locating pins in the rear gate panel holes and install the rear gate glass.
(5) Lightly press the entire perimeter of rear gate glass for tight fit.
(6) Make flush the adhesive surface jutted out using spatula.

6) After completion of all work, allow the vehicle to stand for about 24 hours.

NOTE:
• When door is opened/closed after glass is bonded, always lower the door glass first, and then open/close it carefully.
• Move the vehicle slowly.
• For minimum drying time and vehicle standing time before driving after bonding, follow instructions or instruction manual from the adhesive manufacturer.

7) After curing of adhesive, pour the water on external surface of vehicle to check that there are no water leaks.

NOTE:
When a vehicle is returned to the user, tell him or her that the vehicle should not be subjected to heavy impact for at least three days.

8) Connect the rear defogger connector and radio antenna connector.
9) Install the rear wiper motor. <Ref. to WW-41, INSTALLATION, Rear Wiper Motor.>
10) Install the rear gate garnish. <Ref. to EI-166, INSTALLATION, Rear Gate Garnish.>
11) Install the rear gate trim. <Ref. to EI-161, INSTALLATION, Rear Gate Trim.>

16.Rear Window Glass

A: REMOVAL

1) Disconnect the ground cable from battery.
2) Disconnect the rear defogger connector and radio antenna connector.
3) Remove the glass in the same procedure as for windshield glass. <Ref. to GW-36, REMOVAL, Windshield Glass.>

B: INSTALLATION

1) Cut the cartridge nozzle tip as shown in the figure, and set the adhesive in the sealant gun.

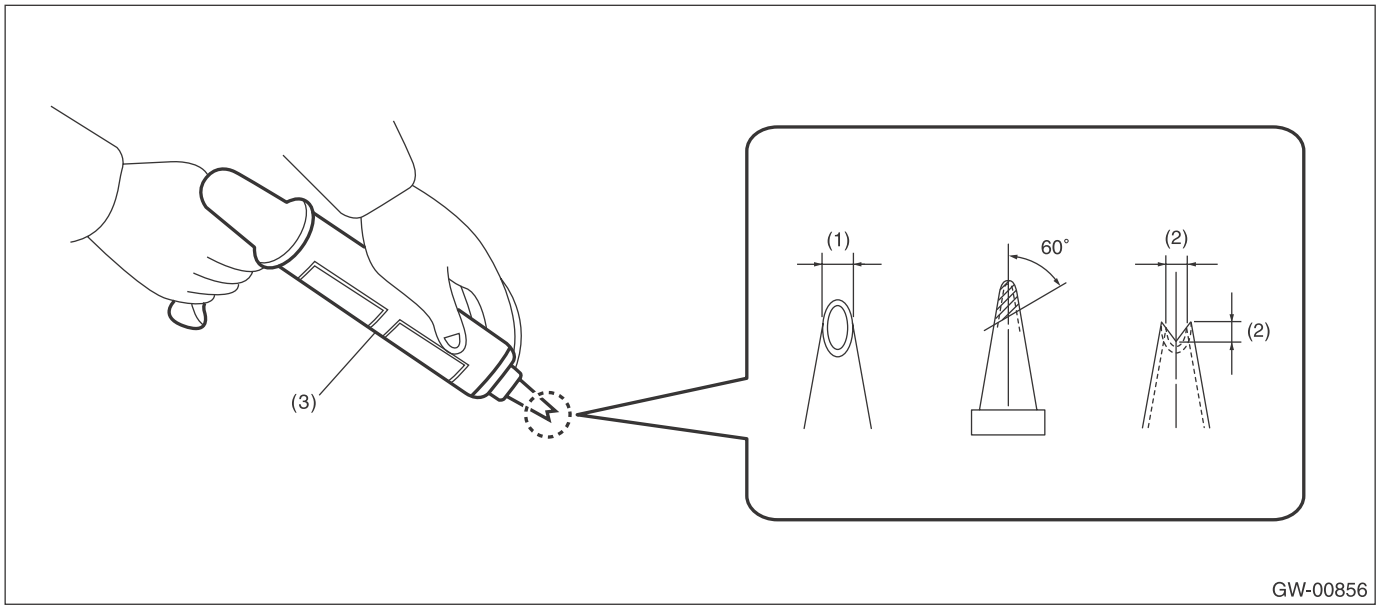

(1) 10 mm (0.39 in) (2) 8 mm (0.31 in) (3) Sealant gun

2) Prepare and clean the adhesion surfaces of the glass and body using the same procedures as for the windshield glass. <Ref. to GW-39, INSTALLATION, Windshield Glass.>
3) Attach the dam rubber to the glass.

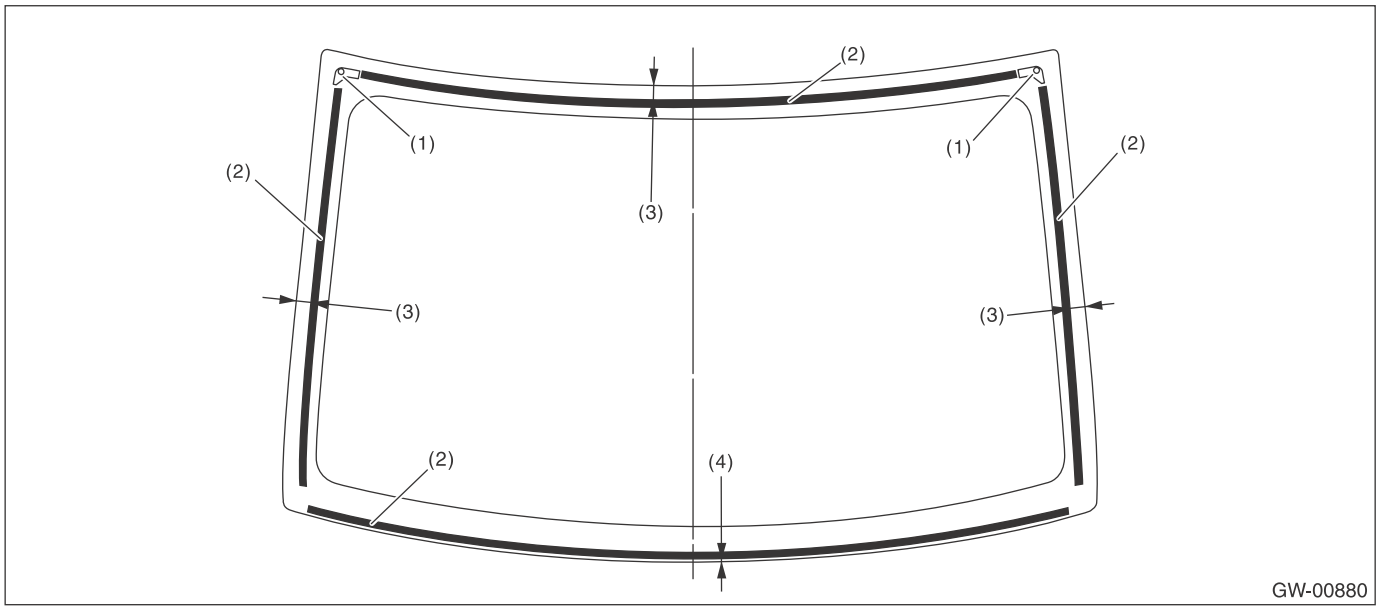

(1) Locating pin (3) 16 mm (0.63 in) (4) 1 mm (0.04 in)
(2) Dam rubber

4) Attach the molding to the glass.

CAUTION:
Be careful to attach the molding so that the molding has no loose or undulating part.

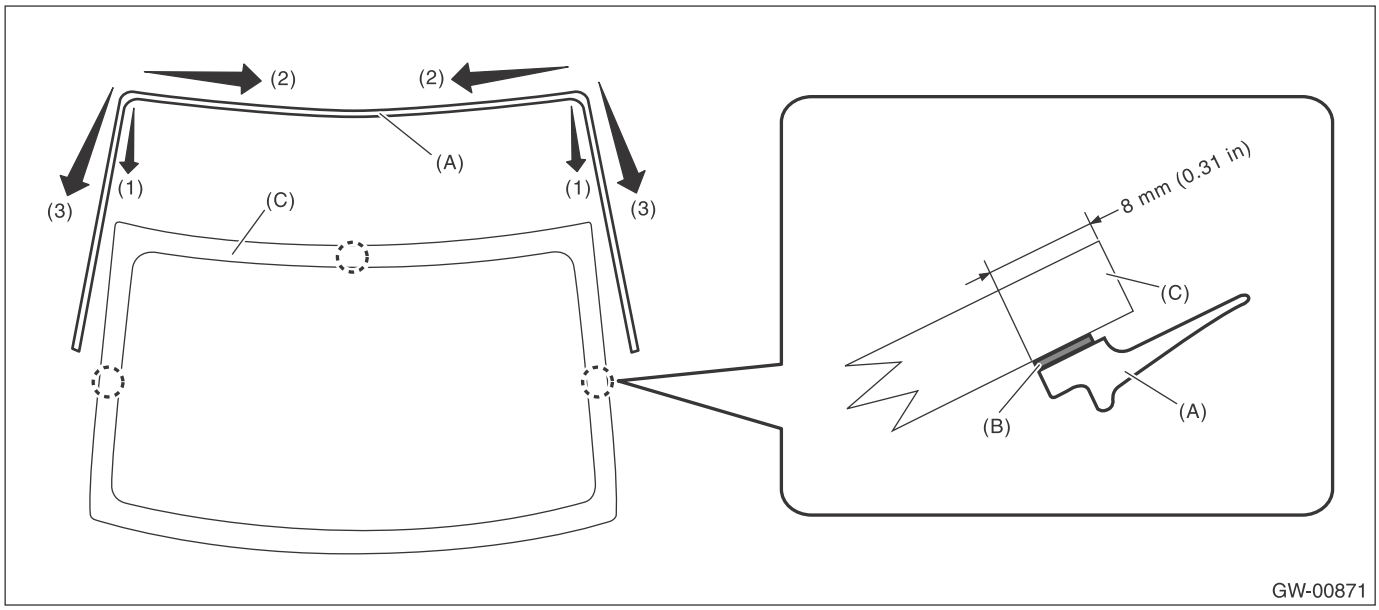

(1) Align the molding (A) to the upper ends of the glass (C).
(2) Attach the molding from the upper corners towards the center.
(3) Attach the molding from the upper corners downward.
(4) Firmly apply the double sided tape (B) of the molding evenly to the glass surface.

5) Install the rear glass in the same procedure as for windshield glass. <Ref. to GW-39, INSTALLATION, Windshield Glass.>

(1) Using a sponge, apply primer to the glass side and body side adhesive surfaces.
(2) Apply adhesive to the glass end back surface.

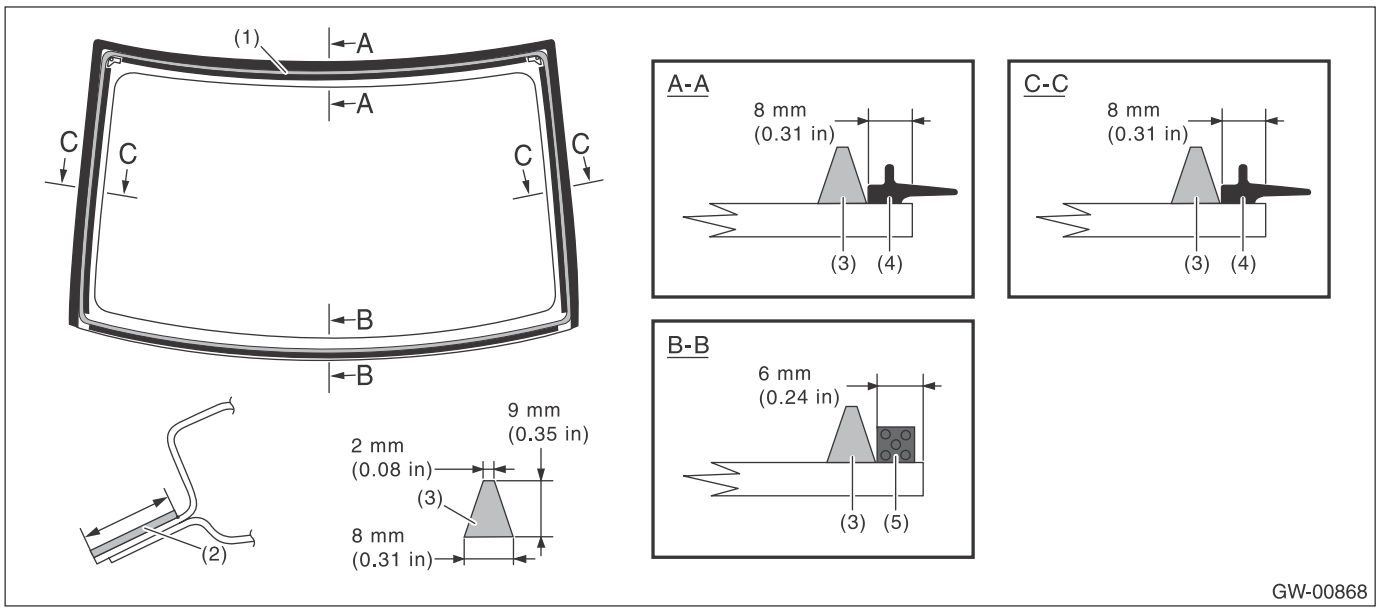

(1) Application of primer (glass side)
(2) Application of primer (body side)
(3) Adhesive
(4) Molding
(5) Dam rubber

(3) Insert the glass locating pins in the rear panel holes and install the rear glass.
(4) Lightly press the entire perimeter of rear glass for tight fit.
(5) Make flush the adhesive surface jutted out using spatula.

6) After completion of all work, allow the vehicle to stand for about 24 hours.

NOTE:
• When door is opened/closed after glass is bonded, always lower the door glass first, and then open/close it carefully.
• Move the vehicle slowly.
• For minimum drying time and vehicle standing time before driving after bonding, follow instructions or instruction manual from the adhesive manufacturer.

7) After curing of adhesive, pour the water on external surface of vehicle to check that there are no water leaks.

NOTE:
When a vehicle is returned to the user, tell him or her that the vehicle should not be subjected to heavy impact for at least three days.

8) Connect the rear defogger connector and radio antenna connector.

17. Rear Window Defogger System

A: WIRING DIAGRAM

Refer to “Rear Defogger System” in the wiring diagram. <Ref. to WI-192, WIRING DIAGRAM, Rear Defogger System.>

B: INSPECTION

1. CHECK SYSTEM

Symptoms	Inspection order
Rear window defogger does not operate.	1. Check the fuse. 2. Check the rear defogger relay. 3. Check the defogger switch. 4. Check the heat wire. 5. Check the wiring harness. 6. Check body integrated unit.

NOTE:
Rear window defogger system can be customized on the Subaru Select Monitor, when the body integrated unit customize setting {A/C ECM setting} is “support”.

System name	Initial setting	Customize setting
Rr Defogger op. mode	OFF after 15 min.	Repeat 15 min. operation and 2 min. stop.

2. CHECK WITH SUBARU SELECT MONITOR

CAUTION:
Check whether the “Rr Defogger op. mode” setting is in initial setting or customize setting before performing inspection.

1) Check the input signal when the rear window defogger switch is operated using Subaru Select Monitor.
   (1) Prepare the Subaru Select Monitor. <Ref. to GW-7, PREPARATION TOOL, General Description.>
   (2) Turn the ignition switch to ON (engine OFF) and run the “PC application for Subaru Select Monitor”.
   (3) On «System Selection Menu» display, select {Integ. unit mode}.
   (4) Select the {R Defogger output} on {Current Data Display & Save}.
   (5) Check the displayed data (ON/OFF) by operating the rear window defogger switch.
2) Check the operation with rear window defogger switch ON.
• When customize setting is set as «Continuous», it is normal if the 15-minute operation and 2-minute stop repeats.
• When customize setting is «Normal», it is normal if the operation lasts for 15 minutes and then turns OFF.
3) When the operation in 2) above fails, replace the body integrated unit.

3. HEAT WIRE INSPECTION

CAUTION:
Use a dry soft cloth to wipe off dirt on the glass along the heat wires with care not to damage the heat wires.

1) Inspect the following inspection tools.
• Liquid crystal thermograph sheet (size: approx. 300 × 300 mm (11.8 × 11.8 in), heat sensing temperature: approx. 35 — 40°C (95 — 104°F))
• Aluminum foil
2) Turn the ignition switch to ON.
3) Turn the defogger switch to ON.
4) Push the liquid crystal thermograph sheet on to the outer surface of the rear glass.

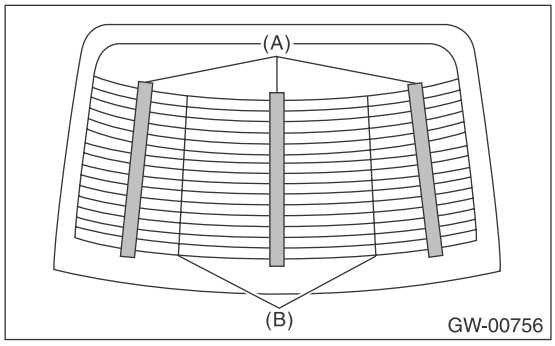

(A) Liquid crystal thermograph sheet
(B) Parting line

NOTE:
Use the liquid crystal thermograph sheet to each section divided by parting lines.
5) Check the color of the liquid crystal thermograph sheet to identify the faulty heat wire.

Liquid crystal thermograph sheet	Criteria
Changed (red → blue)	Normal operation
No change (black)	Open

NOTE:
• If the response of the liquid crystal thermograph sheet is not sufficient, try the inspection on the inner surface of the glass.
• The time until color change depends on the glass surface temperature.

6) Wrap the aluminum foil around the tip of each tester probe and push them on to the faulty heat wire.

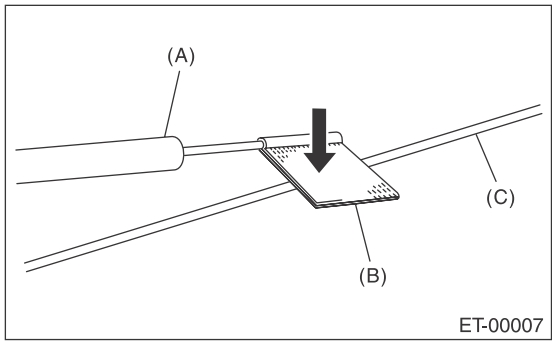

(A) Tester probe
(B) Aluminum foil
(C) Heat wire

7) To both ends of the section that has been found to include an open in the step 5), apply the tester positive (+) probe and the negative (–) probe.
8) Slowly move the negative (–) tester probe along the heat wire. While moving the tester probe, find an open point where the voltage reading changes from 0.

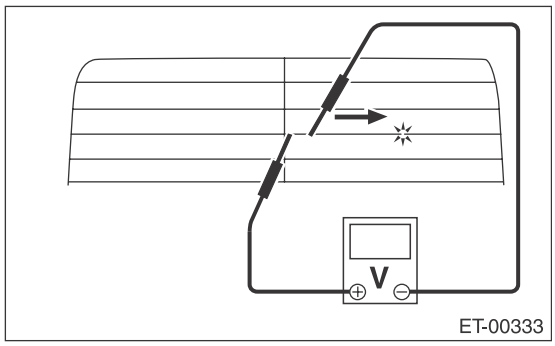

9) Repair the heat wire that determines the place of the open circuit. <Ref. to GW-52, REPAIR, Rear Window Defogger System.>

C: REPAIR

1) Clean the broken portion with alcohol or white gasoline.
2) Mask both side of wire with masking tape.
3) Apply conductive silver composition to the damaged point.

Conductive silver composition:
Permatex
QUICK GRID

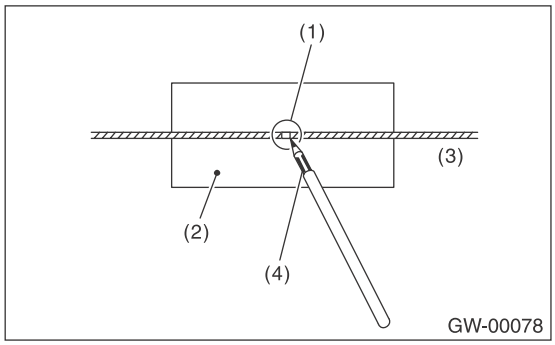

(1) Broken portion
(2) Masking tape
(3) Broken wire
(4) Conductive silver composition

4) After applying conductive silver composition, dry it using a drier.
5) After repair, check the wire.

18.Rear Quarter Glass

A: REMOVAL

1) Disconnect the ground cable from battery.
2) Remove the rear quarter trim. <Ref. to EI-114, OUTBACK MODEL, REMOVAL, Rear Quarter Trim.>
3) Remove the rear quarter glass in the same procedure as for windshield glass. <Ref. to GW-36, REMOVAL, Windshield Glass.>

B: INSTALLATION

1) Cut the cartridge nozzle tip as shown in the figure, and set the adhesive in the sealant gun.

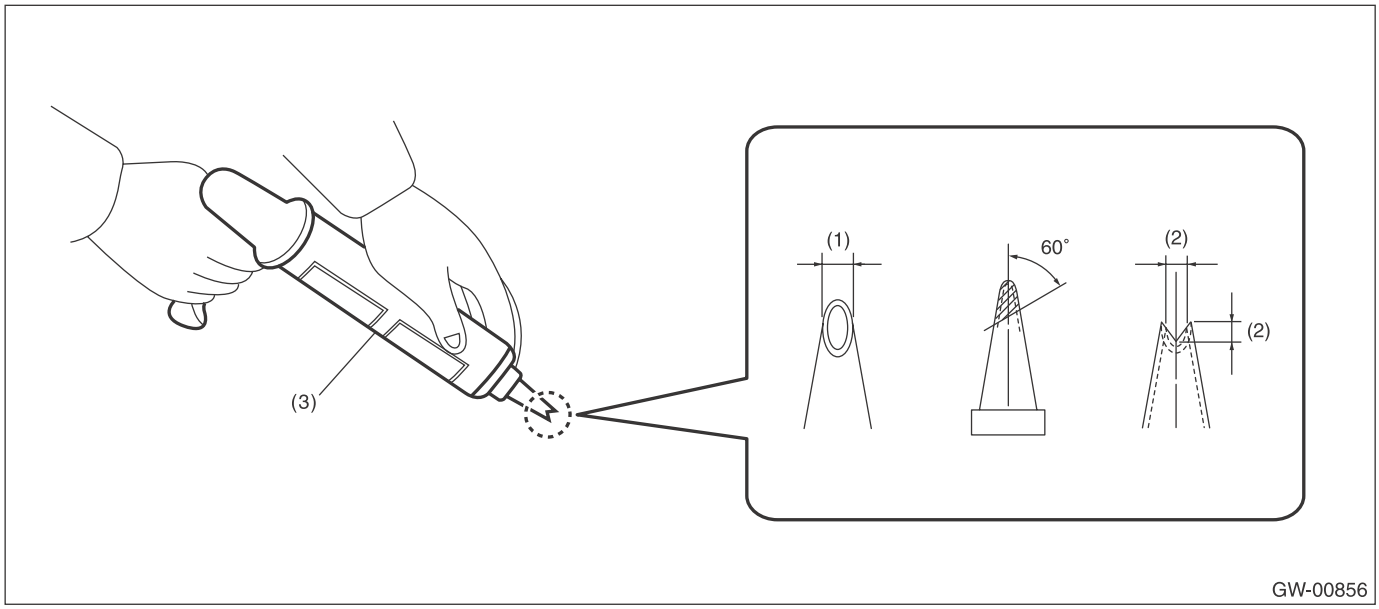

(1) 10 mm (0.39 in) (2) 8 mm (0.31 in) (3) Sealant gun

2) Prepare and clean the adhesion surfaces of the glass and body using the same procedures as for the windshield glass. <Ref. to GW-39, INSTALLATION, Windshield Glass.>
3) Attach the dam rubber to the glass.

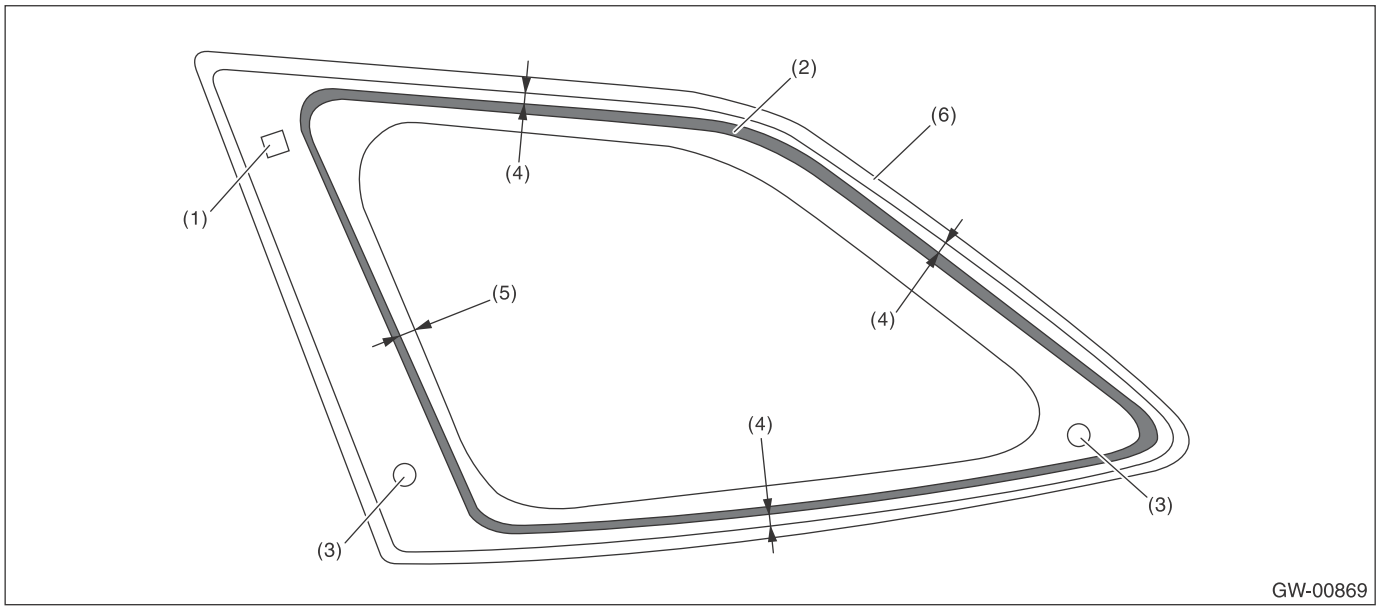

(1) Fastener (3) Clip (5) 12 mm (0.47 in)
(2) Dam rubber (4) 8 mm (0.31 in) (6) Molding

4) Install the rear quarter glass in the same procedure as for windshield glass. <Ref. to GW-39, INSTALLATION, Windshield Glass.>
(1) Using a sponge, apply primer to the glass side and body side adhesive surfaces.
(2) Apply adhesive to the glass end back surface.

NOTE:
Use the molding terminal as a reference.

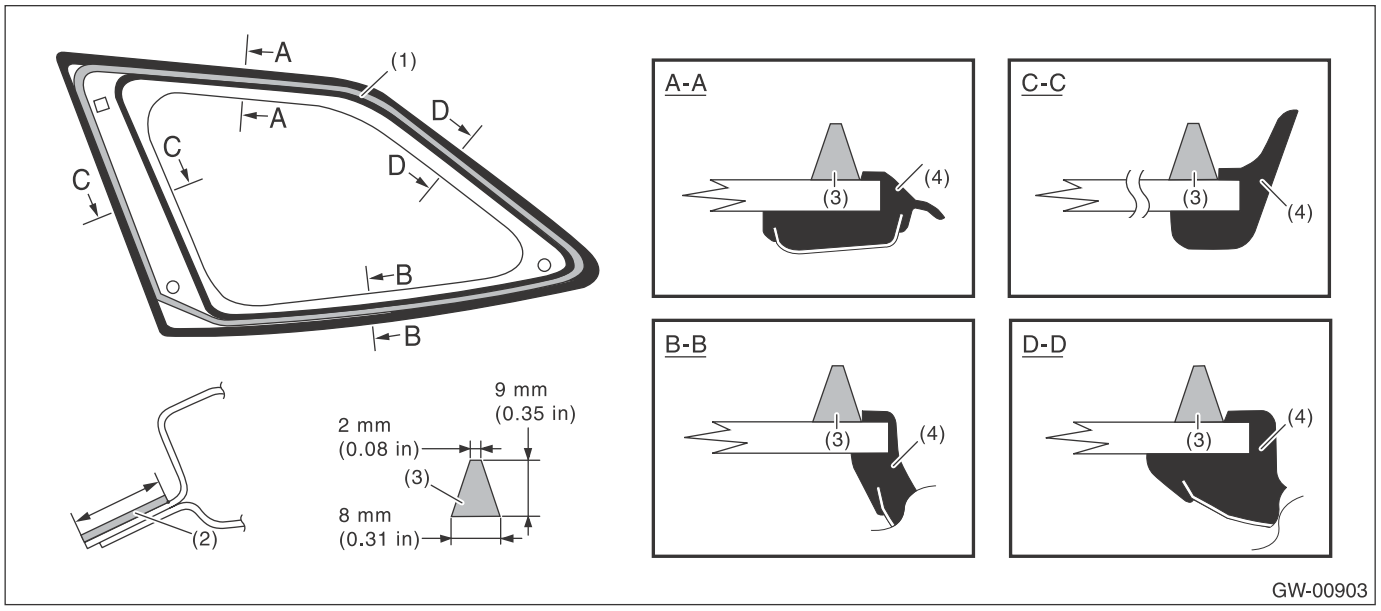

(1) Application of primer (glass side)
(2) Application of primer (body side)
(3) Adhesive
(4) Molding

(3) Attach the fastener to the body.
(4) Insert the clips in the side panel holes and install the rear quarter glass.
(5) Lightly press the entire perimeter of rear quarter glass for tight fit.
(6) Make flush the adhesive surface jutted out using spatula.

5) After completion of all work, allow the vehicle to stand for about 24 hours.

NOTE:
- When door is opened/closed after glass is bonded, always lower the door glass first, and then open/close it carefully.
- Move the vehicle slowly.
- For minimum drying time and vehicle standing time before driving after bonding, follow instructions or instruction manual from the adhesive manufacturer.

6) After curing of adhesive, pour the water on external surface of vehicle to check that there are no water leaks.

NOTE:
When a vehicle is returned to the user, tell him or her that the vehicle should not be subjected to heavy impact for at least three days.

7) Install the rear quarter trim. <Ref. to EI-119, INSTALLATION, Rear Quarter Trim.>

19.Rearview Mirror

A: REMOVAL

CAUTION:
Be careful not to damage the mirror surface and windshield glass.
1) Remove the TORX® bolt, and then slide the rear view mirror to remove.

Preparation tool: TORX® T20

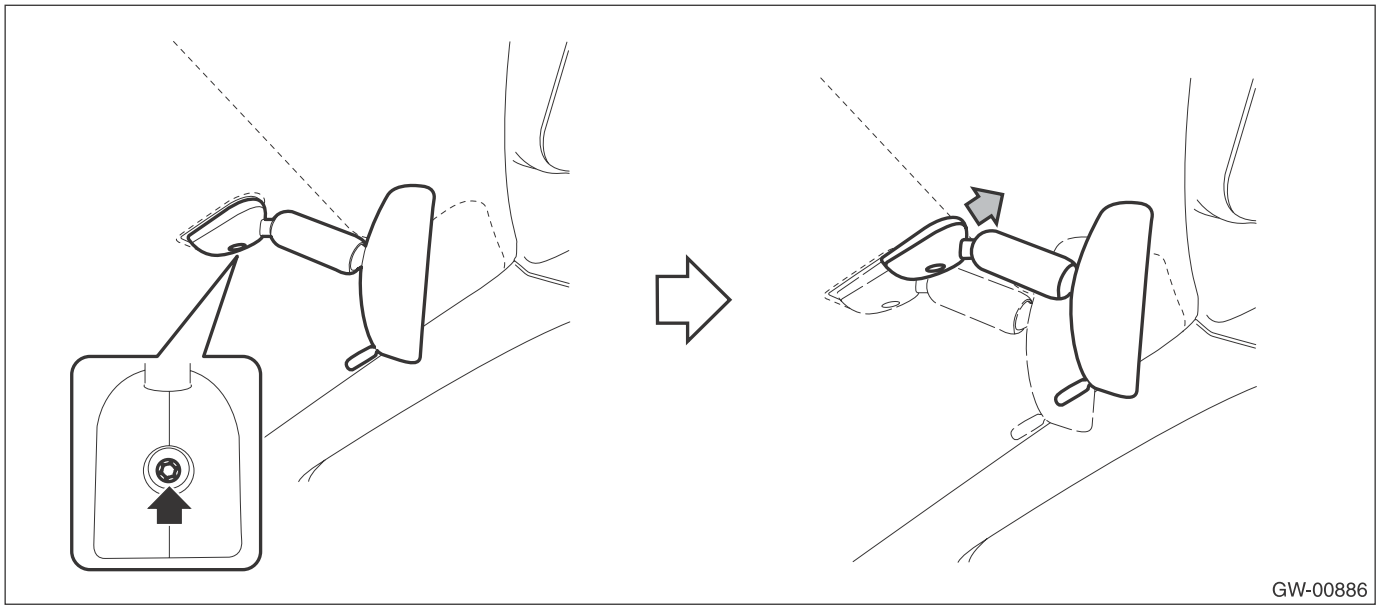

2) When the mirror mount is damaged, use something like piano wire or a spatula to remove.

B: INSTALLATION

CAUTION:
When tightening the mounting TORX® screw, be sure to observe the tightening torque. Otherwise, the mount may be damaged in over-torque conditions.
Install each part in the reverse order of removal.

Tightening torque:
Refer to "COMPONENT" of "General Description". <Ref. to GW-6, MIRROR, COMPONENT, General Description.>

NOTE:
If the mirror mount is removed, it is attached according to the following procedures.
1. Remove the old adhesive completely.
2. Attach the mirror mount by matching with the mark on the windshield glass.
3. Make sure that the mirror mount is firmly adhered.

Adhesive:
REPAIR KIT IN MR (Part No. 65029FC000) or equivalent

C: INSPECTION

Check the mirror and mirror mount for damage.

20.Wiper Deicer System

A: WIRING DIAGRAM

Refer to “Wiper Deicer System” in the wiring diagram. <Ref. to WI-226, Wiper Deicer System.>

B: INSPECTION

NOTE:
- The wiper deicer does not operate when the ambient temperature becomes 5°C (41°F) or more.
- The wiper deicer operates with the rear window defogger at the same time.
- It is possible to perform a forced operation if you keep holding the rear window defogger switch for 3 seconds or more.

1. CHECK SYSTEM

Symptoms	Inspection order
Wiper deicer does not operate.	1. Check the fuse. 2. Check the wiper deicer relay. 3. Check the wiper deicer switch. 4. Check the heat wire. 5. Check the wiring harness. 6. Check body integrated unit.

NOTE:
- Wiper deicer system can be customized on the Subaru Select Monitor, when the body integrated unit customize setting {A/C ECM setting} is “support”.
- Set the system using the “Rr Defogger op. mode”, and setting will be the same as rear defogger system setting.

System name	Initial setting	Customize setting
Rr Defogger op. mode	OFF after 15 min.	Continuous operation*

*: When one of the following conditions occurs, continuous operation is suspended and turned off after 15 minutes.
- Ambient temperature at 5°C (41°F) or more continues for 10 seconds.
- Malfunction occurs on ambient sensor.
- Vehicle speed of 15 km/h (9 MPH) or less continues 15 minutes. (OFF when conditions are met)
- Malfunction occurs in CAN communication.
- Battery voltage (10 V or less) continues for 30 seconds

2. CHECK WITH SUBARU SELECT MONITOR

CAUTION:
Before performing the inspection, check the following settings.
- **Is the “wiperdeicer” setting “support”? If “no support”, set to “support” using customize setting.**
- **“Rr Defogger op. mode” setting → Initial setting or customize setting**

1) Check the input signal when the rear window defogger switch is operated using Subaru Select Monitor.
   (1) Prepare the Subaru Select Monitor. <Ref. to GW-7, PREPARATION TOOL, General Description.>
   (2) Turn the ignition switch to ON (engine OFF) and run the “PC application for Subaru Select Monitor”.
   (3) On «System Selection Menu» display, select {Integ. unit mode}.
   (4) Select the {Wiper deicer output} on {Current Data Display & Save}.
   (5) Check the displayed data (ON/OFF) by operating the rear window defogger switch.
2) Check the operation with rear window defogger switch ON.
- When customize setting is set as «Continuous», it is normal if the 15-minute operation and 2-minute stop repeats.
- When customize setting is «Normal», it is normal if the operation lasts for 15 minutes and then turns OFF.

3) When the operation in 2) above fails, replace the body integrated unit.

3. HEAT WIRE INSPECTION

Refer to the heat wire inspection procedure of rear window defogger system. <Ref. to GW-51, HEAT WIRE INSPECTION, INSPECTION, Rear Window Defogger System.>

NOTE:
Heat wire inspection needs removing/installing procedure of instrument panel assembly.

C: REPAIR

Refer to the REPAIR of Rear Window Defogger System. <Ref. to GW-52, REPAIR, Rear Window Defogger System.>

NOTE:
Heat wire repair needs removing/installing procedure of instrument panel assembly.

BODY STRUCTURE

BS

Page
1. General Description 2

1. General Description

A: SPECIFICATION

Refer to “Body Repair Manual” for general description of body structure, reference points and reference dimensions.

INSTRUMENTATION/DRIVER INFO

IDI

		Page
1.	General Description	2
2.	Relay and Fuse	4
3.	Combination Meter System	5
4.	Clock System	16
5.	Combination Meter	20
6.	Speedometer	26
7.	Tachometer	27
8.	Fuel Gauge	28
9.	ECO Gauge	29
10.	Multi Display	30

1. General Description

A: SPECIFICATION

Combination meter	Speedometer	Stepping motor type
	Tachometer	
	ECO gauge	
	Fuel gauge	
	Malfunction indicator light	LED
	Oil pressure warning light	
	AT oil temperature warning light (except for MT model)	
	ABS warning light	
	Engine coolant temperature indicator light	
	Engine coolant temperature warning light	
	Airbag warning light	
	Seat belt warning light	
	Door open warning light	
	Brake fluid/parking brake warning light (C6 model)	
	Brake fluid/parking brake/EPB warning light (except for C6 model)	
	Low fuel warning light	
	Charge warning light	
	AWD warning light (except for MT model)	
	Hill hold warning light	
	EPB warning light (C6 model)	
	Low washer warning light	
	Low engine oil warning light	
	Tire air pressure warning light (except for C5 and C6 models)	
	VDC OFF indicator light	
	VDC warning light/VDC operation indicator light	
	Turn signal indicator light	
	High beam/passing indicator light	
	Security/immobilizer indicator light	
	Front fog light indicator light	
	Lighting indicator light	
	Meter illumination back-up light	
	LCD back light	
	Odo/trip meter	LCD
	Shift position indicator	
	AT select lever position indicator (AT model)	
	Door open/vehicle frame indicator	
	Cruise mode indicator	
Clock	Cruising distance, average fuel economy, instantaneous fuel economy, ambient temperature, current time	VFD
	Passenger's airbag ON indicator	LED
	Passenger's airbag OFF indicator	
	Passenger' seat belt warning light	

B: CAUTION

• Before disassembling or reassembling parts, always disconnect the battery ground cable from battery. When replacing the radio, control module, and other parts provided with memory functions, record the memory contents before disconnecting the battery ground cable. Otherwise, the memory is cleared.
• Reassemble the parts in the reverse order of disassembly procedure unless otherwise indicated.
• Use gloves to avoid damage and getting fingerprints on the glass surface and meter surfaces.
• Do not apply an excessive force on the printed circuit.
• Do not drop or otherwise apply impact.
• Connect the connectors securely when reassembling.
• After reassembly, make sure that the functional parts operate normally.
• When the combination meter of model with immobilizer has been replaced, be sure to perform the registration of immobilizer.

C: PREPARATION TOOL

1. SPECIAL TOOL

ILLUSTRATION	TOOL NUMBER	DESCRIPTION	REMARKS
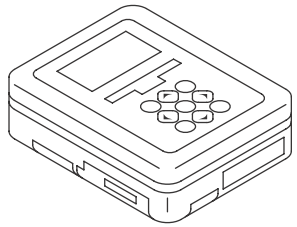 ST1B022XU0	1B022XU0	SUBARU SELECT MONITOR III KIT	Used for troubleshooting the electrical system.

2. GENERAL TOOL

TOOL NAME	REMARKS
Circuit tester	Used for measuring resistance and voltage.

2. Relay and Fuse

A: LOCATION

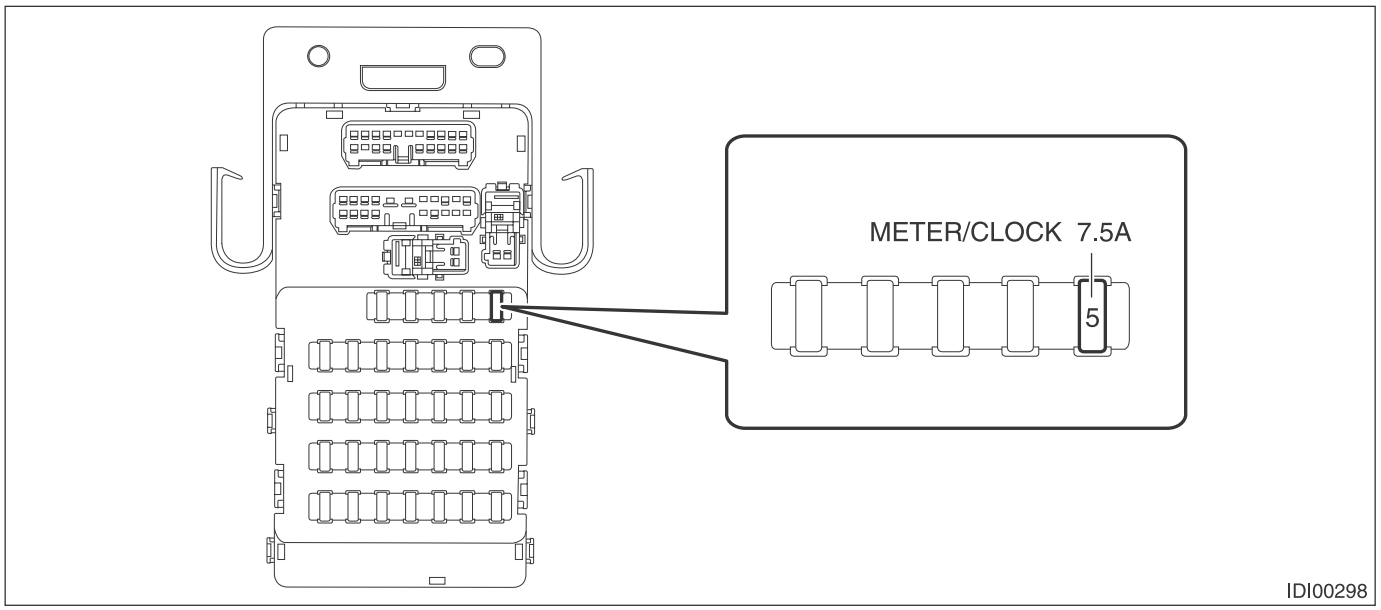

B: INSPECTION

1. CHECK FUSE.

1) Remove the fuse and check visually.
2) If the fuse is blown out, replace the fuse.

3. Combination Meter System

A: WIRING DIAGRAM

Refer to “Combination Meter System” in the wiring diagram. <Ref. to WI-81, WIRING DIAGRAM, Combination Meter System.>

B: ELECTRICAL SPECIFICATION

1. COMBINATION METER TERMINAL ARRANGEMENT

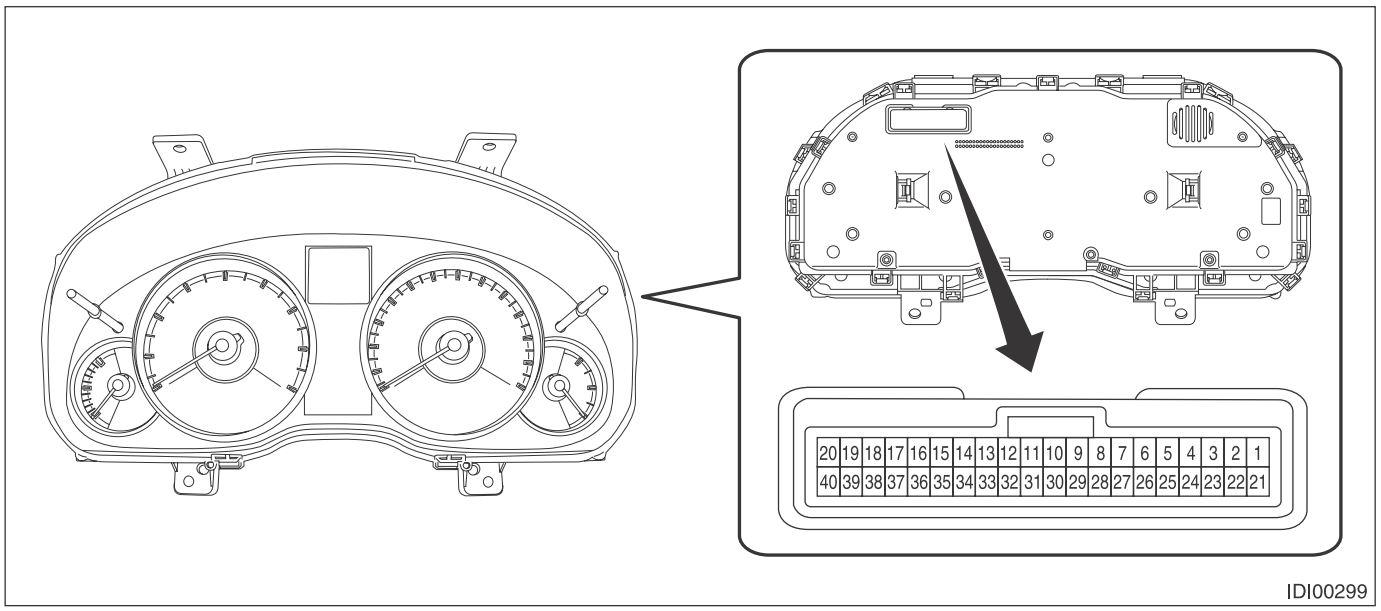

Connector

Terminal No.	Item	Measuring condition	Standard
3 (U-ART com.)	—	Cannot be measured	—
6 ← → Chassis ground	Voltage	Malfunction indicator light off → on	0 V → 10 — 14 V
7 ← → Chassis ground	Voltage	Charge warning light off → on	0 V → 10 — 14 V
8 ← → Chassis ground	Voltage	Oil pressure warning light off → on	0 V → 10 — 14 V
10 ← → Chassis ground	Voltage	LH turn indicator off → on	0 V → 10 — 14 V
11 ← → Chassis ground	Voltage	RH turn indicator off → on	0 V → 10 — 14 V
12 ← → Chassis ground	Voltage	Airbag warning light on → off	10 — 14 V → 0 V
14 ← → Chassis ground	Voltage	Auto headlight beam leveler warning light off → on	0 V → 10 — 14 V
15 ← → Chassis ground	Voltage	Security/immobilizer indicator light off → on	0 V → 10 — 14 V
19 (IG) ← → Chassis ground	Voltage	IG OFF → ON	0 V → 10 — 14 V
20 (+B) ← → Chassis ground	Voltage	Always	10 — 14 V
24 ← → Chassis ground	Voltage	Brake fluid/parking brake warning light off → on	0 V → 10 — 14 V
29 ← → Chassis ground	Waveform	Speedometer	Pulse generation
30 ← → Chassis ground	Waveform	Tachometer	Pulse generation
32 (CAN–) ← → Chassis ground	—	Cannot be measured	—
33 (CAN+) ← → Chassis ground	—	Cannot be measured	—
35 ← → Chassis ground	—	Cannot be measured	—
36 ← → Chassis ground	Voltage	Ambient sensor	0 V → 0.1 — 5 V
37 ← → Chassis ground	Resistance	Always	Less than 1 Ω
38 ← → Chassis ground	Resistance	Always	Less than 1 Ω
39 (GND) ← → Chassis ground	Resistance	Always	Less than 1 Ω

C: OPERATION

1. SELF-DIAGNOSIS DISPLAY MODE

The self-diagnosis (checking of each meter, warning light, indicator light, illumination, LCD) of combination meter can be performed in the following procedure.

CAUTION:
Perform the steps described in 1) through 4) within 10 seconds.
1) Within 3 seconds after turning the ignition switch to ON, set the lighting switch to tail light or headlight position.
2) Press the trip meter knob three times.
3) Turn the lighting switch to OFF, and press the trip meter knob three times.
4) Set the lighting switch to tail light or headlight position again, and press the trip meter knob three times.

NOTE:
• When pressing the trip meter knob four times, the display changes to DTC display mode. <Ref. to IDI-8, DTC DISPLAY MODE, OPERATION, Combination Meter System.>
• When pressing the trip meter knob five times, the display changes to dealer customize mode. <Ref. to IDI-9, DEALER CUSTOMIZE MODE, OPERATION, Combination Meter System.>
• When the self-diagnosis function operates, the warning light, indicator light, and LCD display checks are performed. After this, the buzzer will sound for 0.5 seconds every time the trip meter knob is pressed, and operation checks are performed in the order of meter indicator needle operation, meter indicator needle indication, and LCD. Turn the ignition switch to OFF to cancel the self-diagnosis function.
• When the engine starts during diagnosis, the self-diagnosis function is not cancelled, however, once the vehicle starts driving, the self-diagnosis function is deactivated automatically.
5) Move on to the “Meter Indicator Needle Operation Check”.
Check meter operation, warning light, indicator light, illumination and LCD.

Meter indicator needle	LCD display, illumination	Warning lights, indicator lights
MIN indication ↓ MAX indication	ILL1 (Min. brightness) ↓(Display for one second for each level) ILL6 (Max. brightness)	Light ON The engine coolant temperature warning light illuminates in red.
MAX indication ↓ MIN indication	ILL6 (Max. brightness) ↓(Display for one second for each level) ILL1 (Min. brightness)	

6) Press the trip meter knob once.
7) Move on to the “Meter Indicator Needle Indication Check”.
Check meter operation, warning light, indicator light, and LCD.

NOTE:
• The meter indicator needle will switch every 1.5 seconds.
• The ILL illumination level will be at the brightness it was set to when switching to the “Meter Indicator Needle Indication Check”.
• During operation, “_S_2” is displayed on the LCD trip display.

Speedometer (km/h)	Tachometer (rpm)	Fuel gauge	ECO gauge	Low fuel warning light	Warning lights, indicator lights
0	0	Lowest point	Lowest point	Light ON	Light OFF The engine coolant temperature indicator light illuminates in blue.
0	0	E	–Max	Light ON	
40	1000	1/2	0	Light OFF	
100	4000	F	+Max	Light OFF	
40	1000	1/2	0	Light OFF	
0	0	E	–Max	Light ON	

8) Press the trip meter knob once.

9) Move on to the “LCD Display Check”.
Check the LCD display.

NOTE:
- All warning lights and indicator lights turn off.
- The meter indicator needle maintains its position in the “Meter Indicator Needle Indication Check”.
- The ILL illumination level is lit at ILL6 (highest brightness).
- After No. 14 is displayed in the illumination order, display is repeated from No. 1 again.

ORDER	AT/SS	CRUISE/SET	TRIP/UNIT/ODO/ S/I/S#	DOOR/ REAR GATE/ TRUNK OPEN
1	▲ ▼	CRUISE SET	A B 888.8 888888 [S] [I] S#	
2		OFF	111.1 111111	OFF
3	▲	CRUISE	A 222.2 222222 [S]	
4		OFF	333.3 333333	OFF
5	▼	SET	B 444.4 444444 [I]	
6		OFF	555.5 555555	OFF
7	▲	CRUISE	A 666.6 666666 S#	
8		OFF	777.7 777777	OFF
9	▼	SET	B 888.8 888888 [S]	
10		OFF	999.9 999999	OFF
11	▲	CRUISE	A 000.0 000000 [I]	
12		OFF	888.8 888888	OFF
13	▼	SET	B 888.8 888888 S#	
14		OFF	888.8 888888	OFF

IDI00316

2. DTC DISPLAY MODE

The combination meter DTC can be displayed according to the following procedure.

CAUTION:
Perform the steps described in 1) through 4) within 10 seconds.
1) Within 3 seconds after turning the ignition switch to ON, set the lighting switch to tail light or headlight position.
2) Press the trip meter knob four times.
3) Turn the lighting switch to OFF, and press the trip meter knob four times.
4) Set the lighting switch to tail light or headlight position again, and press the trip meter knob four times.
5) Move on to the “DTC display mode”.

NOTE:
• If a diagnostic trouble code (DTC) is detected, an input error to meters exists. Check the harness on the body side and related parts.
• Detected diagnostic trouble code (DTC) cannot be cleared.
• When the engine starts during diagnosis, the self-diagnosis function is not cancelled, however, once ignition switch is turned OFF or the vehicle is driven, the DTC display mode is cancelled automatically.

(1) When the DTC display mode operates, the LCD displays whether diagnostic trouble code (DTC) exists.

DTC display	Item	Condition
“--”	-	Normal
“Er”	-	System error (meter error)
B900	Power supply system	When IG OFF is detected while driving
B901	Speedometer	Abnormal speed pulse value and CAN data value with engine ON
B902	Speedometer	Inconsistency between speed pulse value and CAN data value with engine ON
U116	Tachometer	Abnormal input data with engine ON
U140	Fuel meter	Abnormal input data with engine ON
U155	CAN communication	CAN communication error
U167	Immobilizer collation	Collation with body integrated unit failed
U422	Fuel meter	Abnormal input data with IG ON
U431	Fuel meter	When input data out of range is detected with engine ON

(2) If the diagnostic trouble code (DTC) is stored, ODO value at occurrence of trouble is displayed.

NOTE:
• Diagnostic trouble code (DTC) is stored for up to four cases. If diagnostic trouble code (DTC) is input exceeding four cases, the code is deleted in order starting with the oldest one.
• When there are more than one diagnostic trouble code (DTC), the code is displayed according to the following conditions and switches every time when the trip meter knob is pressed.

1. Displayed in the descending order of ODO value.

2. If the ODO value is the same, displayed in the ascending order of diagnostic trouble code (DTC) value.

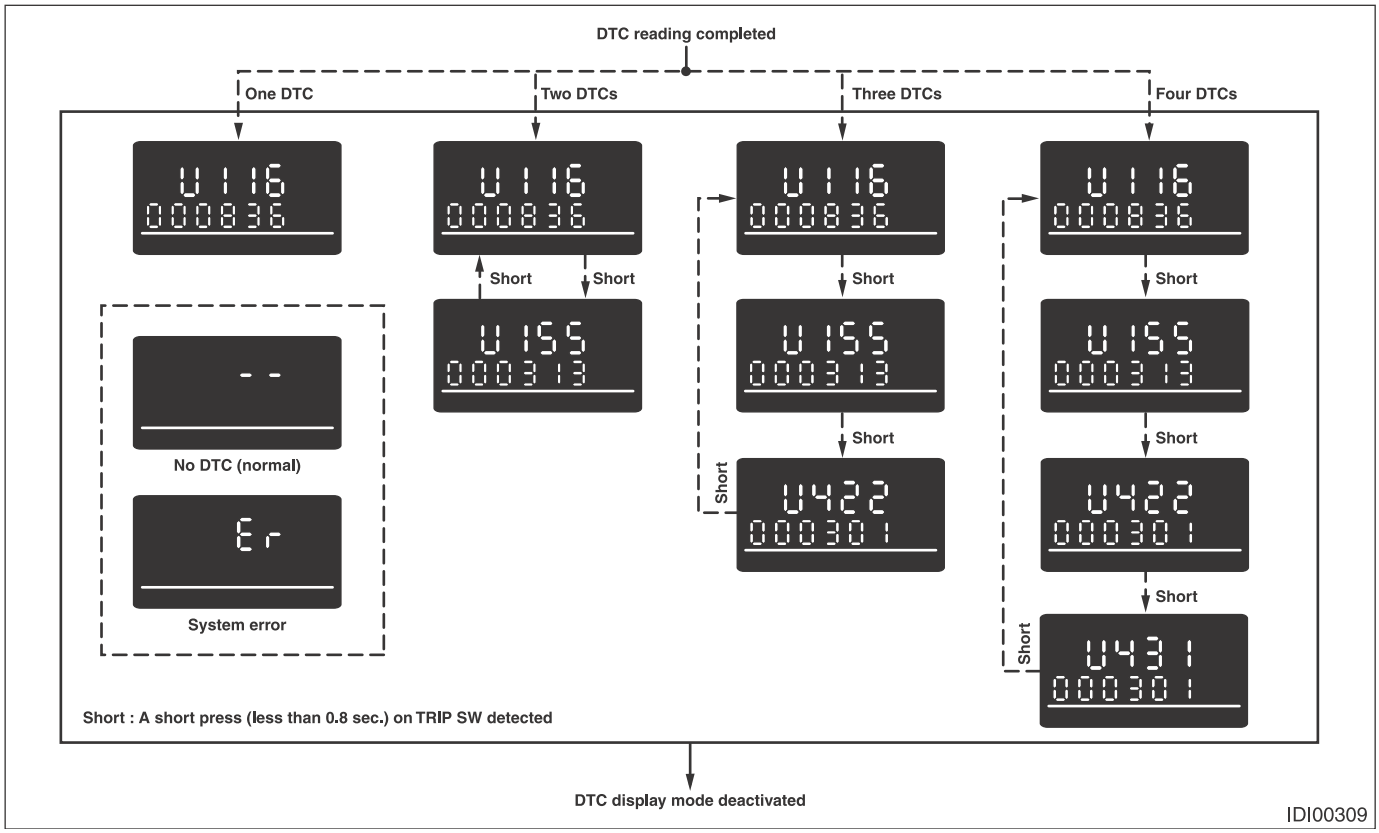

3. DEALER CUSTOMIZE MODE

The combination meter can be customized with dealer customize according to the following procedure.

CAUTION:
Perform the steps described in 1) through 4) within 10 seconds.

1) Within 3 seconds after turning the ignition switch to ON, set the lighting switch to tail light or headlight position.
2) Press the trip meter knob five times.
3) Turn the lighting switch to OFF, and press the trip meter knob five times.
4) Set the lighting switch to tail light or headlight position again, and press the trip meter knob five times.
5) Move on to the “DEALER CUSTOMIZE MODE”.

- When the dealer customize mode operates, the LCD displays each adjustment screen.
- The dealer customize mode consists of three setting screens. {Avg.F/E Correction Screen}, {Ambient Temp. Correction Screen} and {Clock Adjust. Screen} is displayed cyclically in this order every time the trip meter knob is tapped.
- Holding down the trip meter knob while each setting screen is displayed can change the setting value.

NOTE:
When ignition switch is turned OFF or the vehicle is driven, the customize mode is cancelled automatically.

No.	Customize mode	Initial value	Correction range
1	Avg.F/E Correction Screen	±0%	±10%
2	Ambient Temp. Correction Screen	±0°C	±3°C*
3	Clock Adjust. Screen	on	on or off

*: The temperature is compensated only for every 1°C (The change of 1°C corresponds to 1.8°F).

D: INSPECTION

1. SYMPTOM CHART

CAUTION:
When measuring the voltage and resistance of each control module or sensor, use a tapered pin with a diameter of less than 0.64 mm (0.03 in) in order to avoid poor contact. Do not insert the pin more than 2 mm (0.08 in).

Symptoms	Repair order	Note
Combination meter assembly does not operate.	1. Power supply 2. Ground circuit 3. Combination meter	<Ref. to IDI-10, CHECK POWER SUPPLY AND GROUND CIRCUIT, INSPECTION, Combination Meter System.>
Speedometer does not operate.	1. VDC C/M 2. Harness 3. Combination meter	<Ref. to IDI-11, CHECK VDC CONTROL MODULE, INSPECTION, Combination Meter System.>
Tachometer does not operate.	1. ECM 2. Harness 3. Combination meter	<Ref. to IDI-11, CHECK ENGINE CONTROL MODULE (ECM), INSPECTION, Combination Meter System.>
Fuel gauge does not operate.	1. Communication circuit 2. Harness 3. Body integrated unit 4. Fuel level sensor 5. Combination meter	<Ref. to IDI-12, CHECK FUEL LEVEL SENSOR, INSPECTION, Combination Meter System.>
ECO gauge does not operate.	1. Communication circuit 2. Combination meter	<Ref. to IDI-14, CHECK ECO GAUGE, INSPECTION, Combination Meter System.> NOTE: The ECO gauge does not operate unless the vehicle is driven at least 1 km after the trip meter is reset.
Warning buzzer for key left in ignition does not beep.	1. Communication circuit 2. Combination meter	<Ref. to IDI-14, CHECK WARNING BUZZER FOR KEY LEFT IN IGNITION, INSPECTION, Combination Meter System.>

2. CHECK POWER SUPPLY AND GROUND CIRCUIT

	Step	Check	Yes	No
1	**CHECK POWER SUPPLY FOR COMBINATION METER.** 1) Remove the combination meter. 2) Measure the voltage between combination meter connector and chassis ground. ***Connector & terminal*** ***(i10) No. 20 (+) — Chassis ground (–):***	Is the voltage 10 V or more?	Go to step **2**.	Check the harness for open or short between the fuse and combination meter.
2	**CHECK POWER SUPPLY FOR COMBINATION METER.** 1) Turn the ignition switch to ON. 2) Measure the voltage between combination meter connector and chassis ground. ***Connector & terminal*** ***(i10) No. 19 (+) — Chassis ground (–):***	Is the voltage 10 V or more?	Go to step **3**.	Check the harness for open or short between the ignition switch and combination meter.
3	**CHECK GROUND CIRCUIT OF COMBINATION METER.** 1) Turn the ignition switch to OFF. 2) Measure the resistance between combination meter connector and chassis ground. ***Connector & terminal*** ***(i10) No. 39 — Chassis ground:***	Is the resistance less than 10 Ω?	Replace the meter case assembly.	Repair or replace the harness.

3. CHECK VDC CONTROL MODULE

	Step	Check	Yes	No
1	**CHECK VEHICLE SPEED SIGNAL.** 1) Remove the combination meter mounting screws. 2) Lift up the vehicle and support it with rigid racks. 3) Drive the vehicle faster than 10 km/h (6 MPH). **WARNING:** **Be careful not to get caught in the running wheels.** 4) Measure the voltage between combination meter connector and chassis ground. ***Connector & terminal*** ***(i10) No. 29 (+) — Chassis ground (–):***	Is the voltage less than 1 V ←→ 5 V or more?	Replace the meter case assembly.	Go to step **2**.
2	**CHECK HARNESS BETWEEN VDC CONTROL MODULE AND COMBINATION METER.** 1) Turn the ignition switch to OFF. 2) Disconnect the VDC control module connector and combination meter connector. 3) Measure the resistance between the VDC control module connector and the combination meter connector. ***Connector & terminal*** ***(B310) No. 11 — (i10) No. 29:***	Is the resistance less than 10 Ω?	Check the VDC control module. <Ref. to VDC(diag)-2, Basic Diagnostic Procedure.>	Repair or replace the harness.

4. CHECK ENGINE CONTROL MODULE (ECM)

	Step	Check	Yes	No
1	**CHECK ECM SIGNAL.** 1) Start the engine. 2) Measure the voltage between ECM connector and chassis ground. ***Connector & terminal*** ***(B135) No. 15 (+) — Chassis ground (–):***	Is the voltage 0 ←→ 14 V or more?	Go to step **2**.	Inspect the ECM. • H4 NA model:<Ref. to EN(H4SO)(diag)-2, Basic Diagnostic Procedure.> • H4 turbo model:<Ref. to EN(H4DOTC)(diag)-2, Basic Diagnostic Procedure.> • H6 model:<Ref. to EN(H6DO)(diag)-2, Basic Diagnostic Procedure.>
2	**CHECK HARNESS BETWEEN COMBINATION METER AND ECM.** 1) Turn the ignition switch to OFF. 2) Disconnect the ECM connector and combination meter connector. 3) Measure the resistance between the ECM connector and the combination meter connector. ***Connector & terminal*** ***(B135) No. 15 — (i10) No. 30:***	Is the resistance less than 10 Ω?	Replace the meter case assembly.	Repair or replace the harness.

5. CHECK FUEL LEVEL SENSOR

	Step	Check	Yes	No
1	**CHECK COMBINATION METER.** 1) Drain fuel. 2) Check the fuel indication status in the combination meter.	Does the fuel gauge needle indicate EMPTY and is the low fuel warning light blinking?	Go to step **4**.	Go to step **2**.
2	**CHECK COMBINATION METER.** Perform the self-diagnosis of combination meter. <Ref. to IDI-6, SELF-DIAGNOSIS DISPLAY MODE, OPERATION, Combination Meter System.>	Is operation normal?	Go to step **3**.	Replace the meter case assembly. <Ref. to IDI-20, Combination Meter.>
3	**CHECK DIAGNOSTIC TROUBLE CODE (DTC).** 1) Prepare the Subaru Select Monitor kit. 2) Turn the ignition switch to ON (engine OFF) and run the “PC application for Subaru Select Monitor”. 3) On «System Selection Menu» display, select {Integ. unit mode}. 4) Select the {Diagnostic Code(s) Display}.	Is a DTC detected?	Perform the diagnosis according to DTC. <Ref. to LAN(diag)-31, LIST, List of Diagnostic Trouble Code (DTC).>	Go to step **4**.
4	**CHECK HARNESS.** 1) Disconnect the connector of body integrated unit. 2) Measure the resistance between body integrated unit connector and chassis ground. ***Connector & terminal*** ***(i84) No. 17 — Chassis ground:***	Is the resistance 2 — 96 Ω?	Go to step **5**. Go to step **9**.(If the step 1 is “Yes”)	Repair or replace the harness.
5	**CHECK COMMUNICATION BETWEEN BODY INTEGRATED UNIT AND COMBINATION METERS.** 1) Remove the fuel sub level sensor. • H4 NA model:<Ref. to FU(H4SO)-62, REMOVAL, Fuel Sub Level Sensor.> • H4 turbo model:<Ref. to FU(H4DOTC)-82, REMOVAL, Fuel Sub Level Sensor.> • H6 model:<Ref. to FU(H6DO)-71, REMOVAL, Fuel Sub Level Sensor.> 2) Attach the approx. 100 Ω resistance to the fuel sub level sensor connector terminal, and short circuit to the chassis ground. 3) Turn the ignition switch to ON. ***Connector & terminal*** ***(R59) No. 1 — Chassis ground:***	Does the meter needle indicate EMPTY?	Go to step **7**.	Go to step **6**.
6	**CHECK BODY INTEGRATED UNIT.** 1) Retain the condition in step 5. 2) Select the {Fuel level resistance} from the {Integ. unit mode} using the Subaru Select Monitor.	Is approx. 100 Ω displayed in the data?	Go to step **11**.	Replace the body integrated unit. <Ref. to SL-72, REMOVAL, Body Integrated Unit.>

Step		Check	Yes	No
7	**CHECK COMMUNICATION BETWEEN BODY INTEGRATED UNIT AND COMBINATION METERS.** 1) Remove the fuel sub level sensor. • H4 NA model:<Ref. to FU(H4SO)-62, REMOVAL, Fuel Sub Level Sensor.> • H4 turbo model:<Ref. to FU(H4DOTC)-82, REMOVAL, Fuel Sub Level Sensor.> • H6 model:<Ref. to FU(H6DO)-71, REMOVAL, Fuel Sub Level Sensor.> 2) Attach the approx. 2 — 6 Ω resistance to the fuel sub level sensor connector terminal, and short circuit to the chassis ground. 3) Turn the ignition switch to ON. ***Connector & terminal*** ***(R59) No. 1 — Chassis ground:***	Does the meter needle indicate FULL?	Go to step **9**.	Go to step **8**.
8	**CHECK BODY INTEGRATED UNIT.** 1) Retain the condition in step 7. 2) Select the {Fuel level resistance} from the {Integ. unit mode} using the Subaru Select Monitor.	Is the resistance 2 to 6 Ω?	Go to step **11**.	Replace the body integrated unit. <Ref. to SL-72, REMOVAL, Body Integrated Unit.>
9	**CHECK FUEL SUB LEVEL SENSOR.** 1) Remove the fuel sub level sensor. • H4 NA model:<Ref. to FU(H4SO)-62, REMOVAL, Fuel Sub Level Sensor.> • H4 turbo model:<Ref. to FU(H4DOTC)-82, REMOVAL, Fuel Sub Level Sensor.> • H6 model:<Ref. to FU(H6DO)-71, REMOVAL, Fuel Sub Level Sensor.> 2) Measure the resistance between the fuel sub level sensor connectors when the float is in FULL and EMPTY position. ***Connector & terminal*** ***(R59) No. 1 — No. 2:***	Is the resistance 1.0 to 3.0 Ω (FULL) and 61 to 63 Ω (EMPTY)?	Go to step **10**.	Replace the fuel sub level sensor.
10	**CHECK FUEL LEVEL SENSOR.** 1) Remove the fuel level sensor. • H4 NA model:<Ref. to FU(H4SO)-60, REMOVAL, Fuel Level Sensor.> • H4 turbo model:<Ref. to FU(H4DOTC)-80, REMOVAL, Fuel Level Sensor.> • H6 model:<Ref. to FU(H6DO)-69, REMOVAL, Fuel Level Sensor.> 2) Measure the resistance between the fuel level sensor connectors when the float is in FULL and EMPTY position. ***Connector & terminal*** ***(R58) No. 1 — No. 4:***	Is the resistance 1.0 to 3.0 Ω (FULL) and 31 to 33 Ω (EMPTY)?	Check the connection status of the harness and connector that may have a temporary poor contact.	Replace the fuel level sensor.
11	**CHECK COMBINATION METER OPERATION.** 1) Remove the combination meter. 2) Attach the combination meter to another vehicle on which the fuel gauge operates normally to check its operation.	Is the fuel gauge normal?	Replace the body integrated unit. <Ref. to SL-72, REMOVAL, Body Integrated Unit.>	Replace the meter case assembly.

6. CHECK ECO GAUGE

	Step	Check	Yes	No
1	**CHECK DIAGNOSTIC TROUBLE CODE (DTC).** 1) Prepare the Subaru Select Monitor kit. 2) Turn the ignition switch to ON (engine OFF) and run the “PC application for Subaru Select Monitor”. 3) On «System Selection Menu» display, select {Integ. unit mode}. 4) Select the {Diagnostic Code(s) Display}.	Is a DTC of high-speed CAN detected?	Perform the diagnosis according to DTC. <Ref. to LAN(diag)-31, LIST, List of Diagnostic Trouble Code (DTC).>	Go to step **2**.
2	**CHECK ECO GAUGE.** Perform the self-diagnosis of combination meter. <Ref. to IDI-6, SELF-DIAGNOSIS DISPLAY MODE, OPERATION, Combination Meter System.>	Does ECO gauge operate properly?	Check the connection status of the harness and connector that may have a temporary poor contact.	Replace the meter case assembly. <Ref. to IDI-20, Combination Meter.>

7. CHECK WARNING BUZZER FOR KEY LEFT IN IGNITION

	Step	Check	Yes	No
1	**CHECK WARNING BUZZER FOR KEY LEFT IN IGNITION.** 1) Insert the key into the ignition key lock. 2) Open the driver’s side door.	Does the buzzer from the meter sound?	Normal operation.	Go to step **2**.
2	**CHECK COMMUNICATION STATUS.** 1) Prepare the Subaru Select Monitor. 2) On «System Selection Menu» display, select {Integ. unit mode}. 3) Select the {key-lock warning SW} from {Current Data Display & Save}. 4) Insert and remove the key.	Does display switch between ON ←→ OFF?	Go to step **3**.	Check the ignition switch circuit. <Ref. to SL-60, INSPECTION, Ignition Key Lock.>
3	**CHECK COMMUNICATION STATUS.** 1) Select the {Driver’s door SW input} from {Current Data Display & Save}. 2) Open and close the door.	Does display switch between ON ←→ OFF?	Go to step **4**.	Check the door switch circuit. <Ref. to SL-11, CHECK DOOR LOCK SWITCH, INSPECTION, Door Lock Control System.>
4	**CHECK COMMUNICATION STATUS.** 1) Turn the ignition switch to ON (engine OFF) and run the “PC application help for Subaru Select Monitor”. 2) On «System Selection Menu» display, select {Integ. unit mode}. 3) Select the {Diagnostic Code(s) Display}.	Is a DTC detected?	Perform the diagnosis according to DTC. <Ref. to LAN(diag)-31, LIST, List of Diagnostic Trouble Code (DTC).>	Go to step **5**.
5	**CHECK COMBINATION METER.** The self-diagnosis of combination meter is performed. <Ref. to IDI-6, SELF-DIAGNOSIS DISPLAY MODE, OPERATION, Combination Meter System.>	Did the buzzer sound?	Go to step **6**.	Replace the meter case assembly.
6	**CHECK COMBINATION METER.** 1) Remove the combination meter. 2) Install the combination meter to another vehicle with a normally operating buzzer and check buzzer operation.	Did the buzzer sound?	Replace the body integrated unit. <Ref. to SL-72, REMOVAL, Body Integrated Unit.>	Replace the meter case assembly.

E: NOTE

For operation procedures of each component of the combination meter system, refer to the respective section.

- Combination meter:<Ref. to IDI-20, Combination Meter.>
- Speedometer:<Ref. to IDI-26, Speedometer.>
- Tachometer:<Ref. to IDI-27, Tachometer.>
- Fuel gauge:<Ref. to IDI-28, Fuel Gauge.>
- ECO gauge:<Ref. to IDI-29, ECO Gauge.>

4. Clock System

A: WIRING DIAGRAM

Refer to “Clock System” in the wiring diagram. <Ref. to WI-80, WIRING DIAGRAM, Clock System.>

B: ELECTRICAL SPECIFICATION

1. MULTI DISPLAY TERMINAL ARRANGEMENT

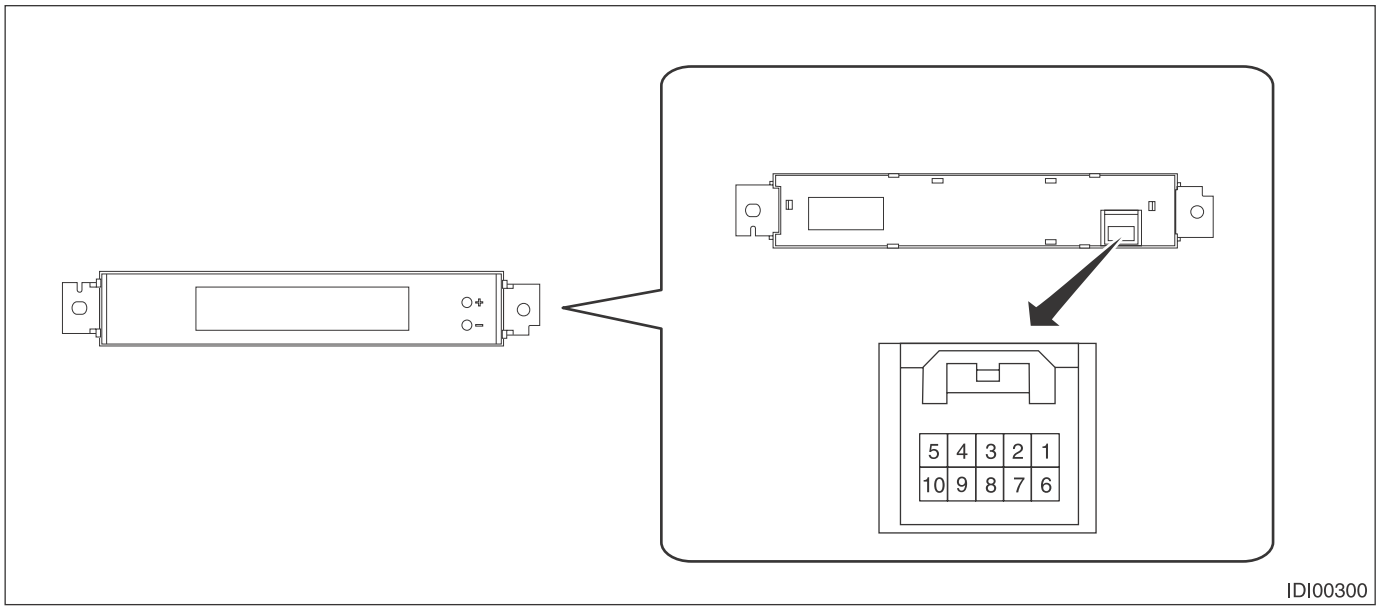

Connector

Terminal No.	Item	Measuring condition	Specification
5 (U-ART com.)	—	Cannot be measured	—
6 (GND) ←→ Chassis ground	Resistance	Always	Less than 1 Ω
8 (IG) ←→ Chassis ground	Voltage	IG OFF → ON	0 V → 10 — 14 V
10 (+B) ←→ Chassis ground	Voltage	Always	10 — 14 V

C: INSPECTION

1. SYMPTOM CHART

Symptoms	Repair order	NOTE
No display is shown.	1. Power supply 2. Ground circuit 3. Communication circuit harness 4. Multi display	<Ref. to IDI-17, CHECK POWER SUPPLY AND GROUND CIRCUIT., INSPECTION, Clock System.>
Ambient air temperature/fuel economy displays do not appear.	1. Power supply 2. Ground circuit 3. Communication circuit harness 4. Multi display	<Ref. to IDI-17, CHECK CLOCK SYSTEM COMMUNICATION CIRCUIT, INSPECTION, Clock System.>
Ambient air temperature display do not appear.	1. Power supply 2. Harness 3. Ambient sensor 4. Communication circuit 5. Multi display	<Ref. to IDI-18, CHECK AMBIENT TEMPERATURE SYSTEM COMMUNICATION CIRCUIT, INSPECTION, Clock System.>
Fuel economy display do not appear.	1. Settings 2. Communication circuit 3. Multi display	<Ref. to IDI-19, CHECK FUEL ECONOMY SYSTEM COMMUNICATION CIRCUIT., INSPECTION, Clock System.>

2. CHECK POWER SUPPLY AND GROUND CIRCUIT.

	Step	Check	Yes	No
1	**CHECK POWER SUPPLY.** 1) Disconnect the multi display connector. 2) Measure the voltage between multi display connector and chassis ground. ***Connector & terminal*** ***(i59) No. 10 (+) — Chassis ground (–):***	Is the voltage 10 V or more?	Go to step **2.**	Check the harness for open or short between the fuse and multi display.
2	**CHECK GROUND CIRCUIT.** Measure the resistance between multi display connector and chassis ground. ***Connector & terminal*** ***(i59) No. 6 — Chassis ground:***	Is the resistance less than 10 Ω?	Go to step **3.**	Repair or replace the harness.
3	**CHECK HARNESS BETWEEN MULTI DISPLAY AND COMBINATION METER.** 1) Disconnect the combination meter connector. 2) Measure the resistance between multi display connector and combination meter connector. ***Connector & terminal*** ***(i59) No. 5 — (i10) No. 3:***	Is the resistance less than 10 Ω?	Go to step **4.**	Repair or replace the harness.
4	**CHECK MULTI DISPLAY.** 1) Remove the multi display. 2) Attach the clock to another vehicle on which the clock display operates normally, and check its operation.	Is the multi display normal?	Replace the meter case assembly.	Replace the multi display.

3. CHECK CLOCK SYSTEM COMMUNICATION CIRCUIT

	Step	Check	Yes	No
1	**CHECK POWER SUPPLY.** 1) Disconnect the multi display connector. 2) Measure the voltage between multi display connector and chassis ground. ***Connector & terminal*** ***(i59) No. 8 (+) — Chassis ground (–):***	Is the voltage 10 V or more?	Go to step **2.**	Repair or replace the harness.
2	**CHECK GROUND CIRCUIT.** Measure the resistance between multi display connector and chassis ground. ***Connector & terminal*** ***(i59) No. 6 — Chassis ground:***	Is the resistance less than 10 Ω?	Go to step **3.**	Repair or replace the harness.
3	**CHECK HARNESS BETWEEN MULTI DISPLAY AND COMBINATION METER.** 1) Disconnect the combination meter connector. 2) Measure the resistance between multi display connector and combination meter connector. ***Connector & terminal*** ***(i59) No. 5 — (i10) No. 3:***	Is the resistance less than 10 Ω?	Go to step **4.**	Repair or replace the harness.
4	**CHECK MULTI DISPLAY.** 1) Remove the multi display. 2) Attach the clock to another vehicle on which the clock display operates normally, and check its operation.	Is the multi display normal?	Replace the meter case assembly.	Replace the multi display.

4. CHECK AMBIENT TEMPERATURE SYSTEM COMMUNICATION CIRCUIT

	Step	Check	Yes	No
1	**CHECK POWER SUPPLY FOR AMBIENT SENSOR.** 1) Disconnect the ambient sensor connector. 2) Turn the ignition switch to ON. 3) Measure the voltage between the ambient sensor connector and chassis ground. ***Connector & terminal*** ***(B480) No. 2 (+) — Chassis ground (–):***	Is the voltage 4 V or more?	Go to step **2**.	Check the harness for open or short between the fuse and multi display.
2	**CHECK HARNESS BETWEEN AMBIENT SENSOR AND COMBINATION METER.** 1) Disconnect the combination meter connector. 2) Measure the resistance between the ambient sensor connector and the combination meter connector. ***Connector & terminal*** ***(B480) No. 1 — (i10) No. 37:*** ***(B480) No. 2 — (i10) No. 36:***	Is the resistance less than 10 Ω?	Go to step **3**.	Repair or replace the harness.
3	**CHECK AMBIENT SENSOR.** 1) Remove the ambient sensor. <Ref. to AC-68, REMOVAL, Ambient Sensor (Auto A/C Model).> 2) Check the ambient sensor. <Ref. to AC(diag)-23, AMBIENT SENSOR, Diagnostic Procedure for Sensors.>	Is the ambient sensor operating properly?	Go to step **4**.	Replace the ambient sensor.
4	**CHECK AMBIENT TEMPERATURE DISPLAY.** 1) Connect the combination meter connector. 2) Install the 3 Ω resistance to ambient sensor connector terminal. 3) Turn the ignition switch to ON. ***Connector & terminal*** ***(B480) No. 1 — No. 2:***	Does the ambient temperature display 25°C (77°F)?	Repair the poor contact between the ambient air temperature sensor and harness connector.	Go to step **5**.
5	**CHECK AMBIENT AIR TEMPERATURE OUTPUT DATA.** 1) Prepare the Subaru Select Monitor kit. 2) Turn the ignition switch to ON (engine OFF) and run the “PC application for Subaru Select Monitor”. 3) On «System Selection Menu» display, select {Integ. unit mode}. 4) Select the {Ambient Temperature}.	Does the ambient temperature display 25°C (77°F)?	Go to step **6**.	Replace the meter case assembly. <Ref. to IDI-20, Combination Meter.>
6	**CHECK MULTI DISPLAY.** 1) Remove the multi display. 2) Attach the ambient temperature display to another vehicle on which the ambient temperature display operates normally to check its operation.	Does the ambient temperature display 25°C (77°F)?	Replace the multi display.	Replace the meter case assembly. <Ref. to IDI-20, Combination Meter.>

5. CHECK FUEL ECONOMY SYSTEM COMMUNICATION CIRCUIT.

	Step	Check	Yes	No
1	**CHECK FUEL ECONOMY DISPLAY OFF MODE.** Check that the mode display changes when the MFD changeover knob is operated. (Display changes in the following order: Cruising Distance → Average Fuel Economy → Instantaneous Fuel Economy → blank display)	Is fuel economy displayed?	Multi display is normal.	Go to step **2**.
2	**CHECK DIAGNOSTIC TROUBLE CODE (DTC).** 1) Prepare the Subaru Select Monitor kit. 2) Turn the ignition switch to ON (engine OFF) and run the “PC application for Subaru Select Monitor”. 3) On «System Selection Menu» display, select {Integ. unit mode}. 4) Select the {Diagnostic Code(s) Display}.	Is DTC detected?	Go to step **3**.	Replace the meter case assembly. <Ref. to IDI-20, Combination Meter.>
3	**CHECK MULTI DISPLAY.** 1) Remove the multi display. 2) Attach the fuel economy display to another vehicle on which the fuel economy display operates normally to check its operation.	Is the fuel economy display correct?	Replace the multi display.	Replace the meter case assembly. <Ref. to IDI-20, Combination Meter.>

D: NOTE

For operation procedures of each component of the clock system, refer to the following section:

- Multi display:<Ref. to IDI-30, Multi Display.>

5. Combination Meter

A: REMOVAL

1) Disconnect the ground cable from battery.
2) Remove the center panel assembly.

CAUTION:
Do not put your finger on the fin of the air vent grille. Doing so may damage the fin.

(1) Attach the protective tape (a) to the meter visor.

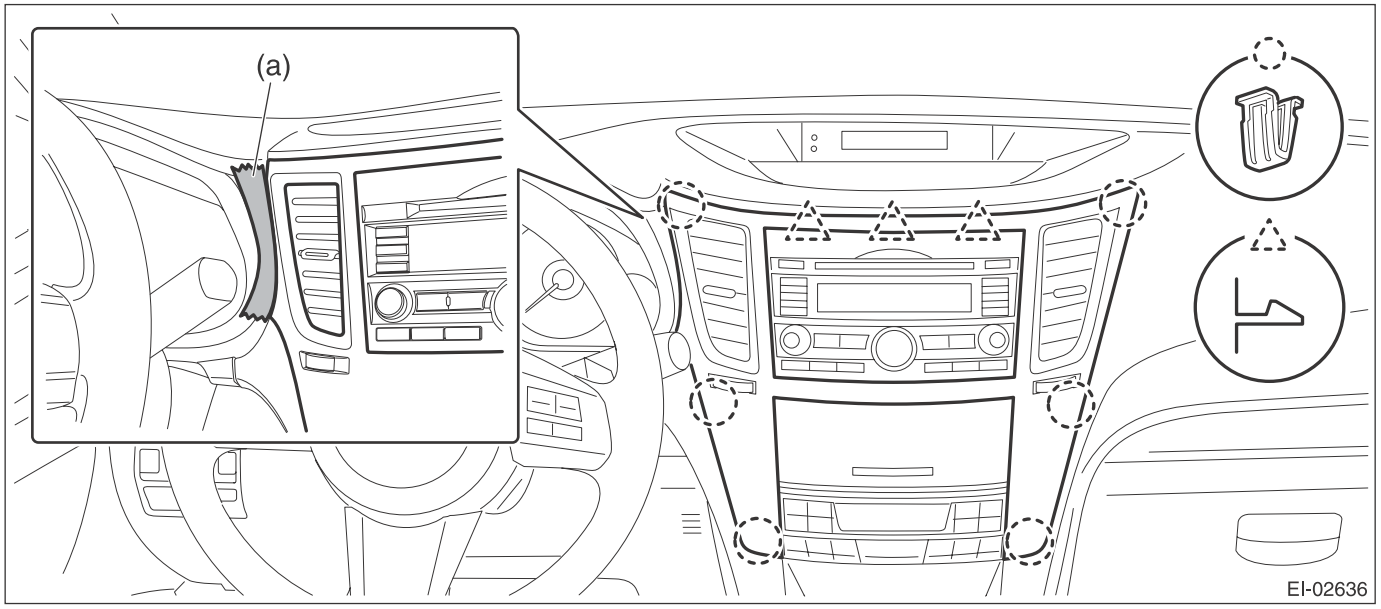

(2) Insert a finger into the air vent grille and release the left and right clips at the top of the center panel. (A), (B)
(3) Insert a finger into the air vent grille and release the left and right clips at the center of the center panel. (C), (D)

(4) Release the clips at the bottom of the center panel and remove the center panel assembly.

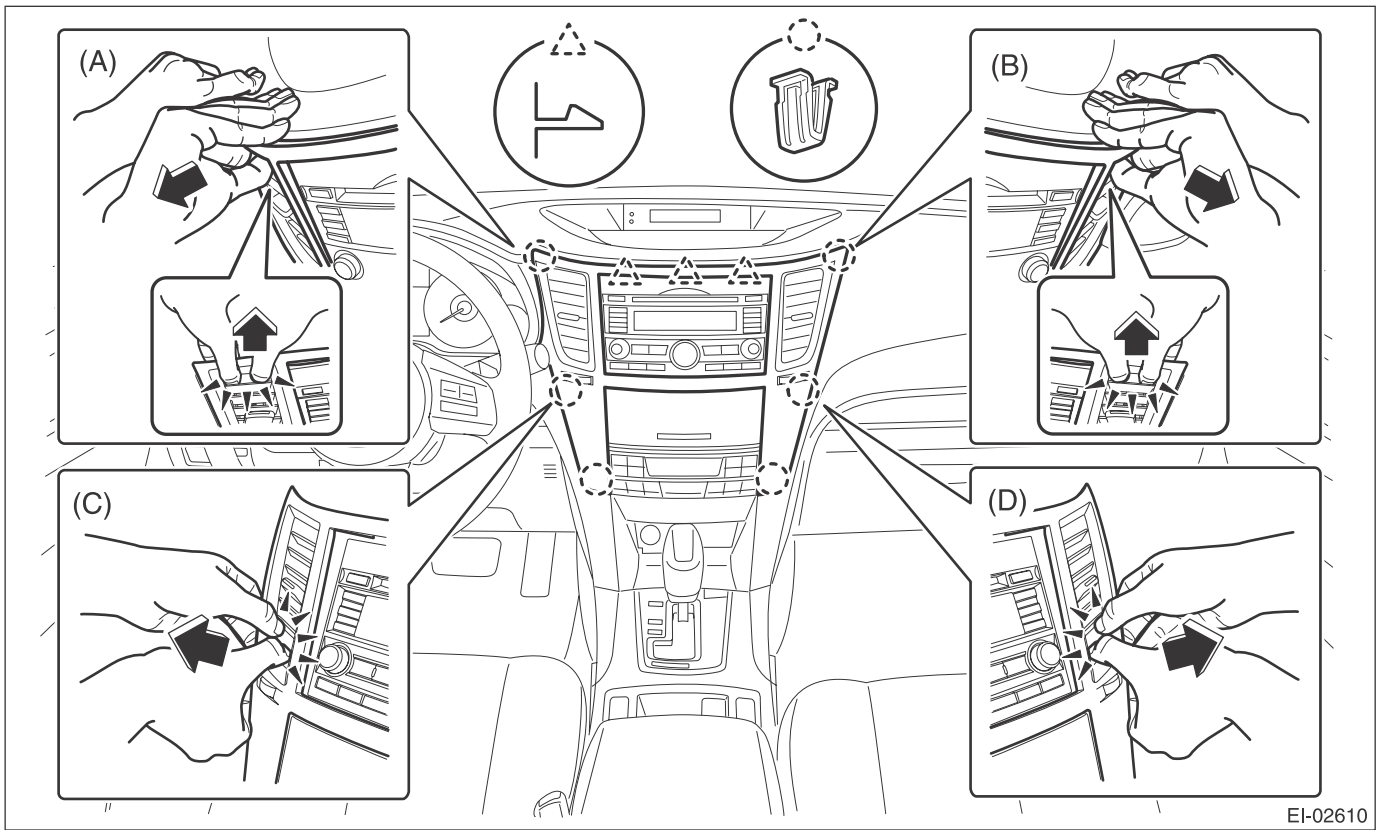

3) Remove the screw and release the claws, then detach the starter cover assembly.

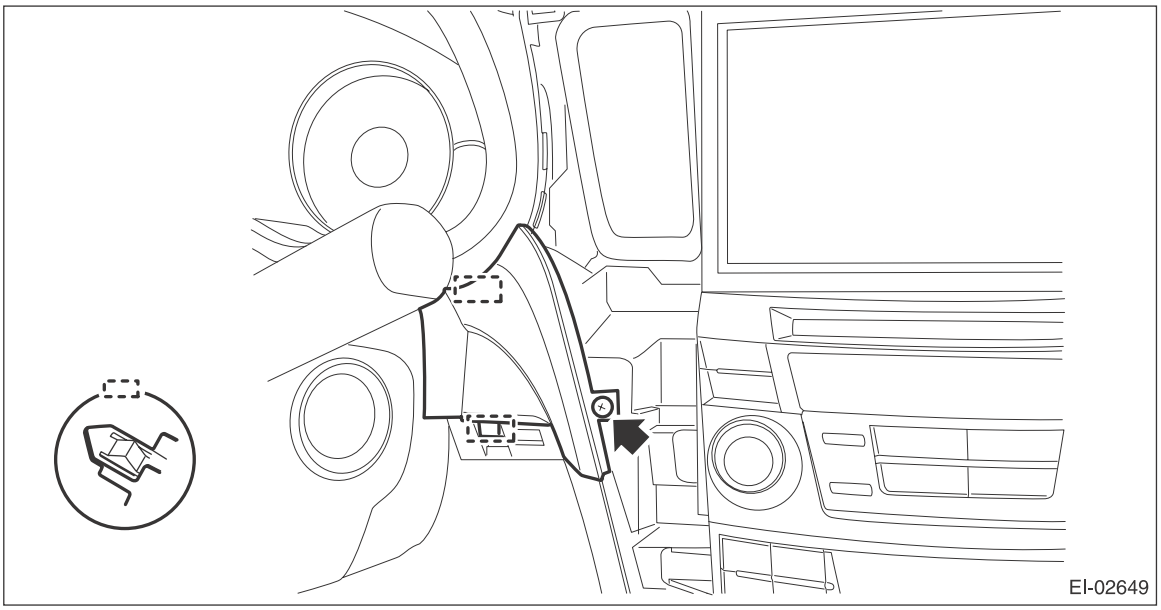

4) Release the lock, tilt the steering column to the lowest end and fully extend the column by the telescopic system.

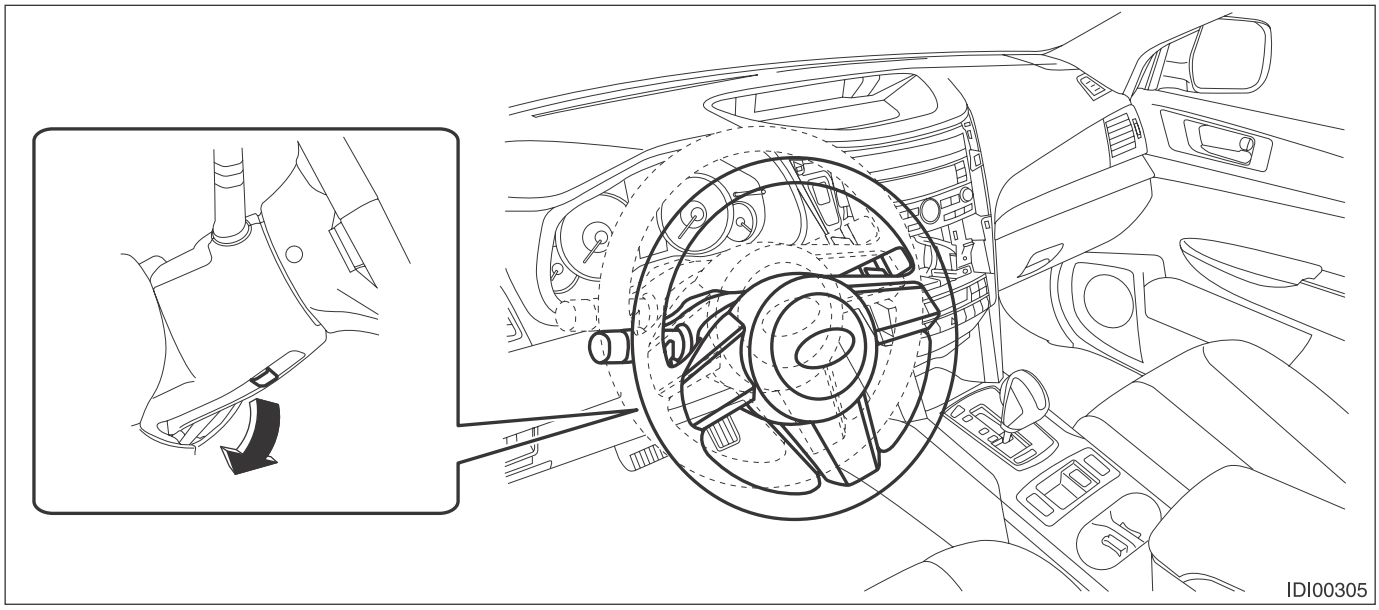

5) Release the screws and clips, then detach the meter visor assembly.

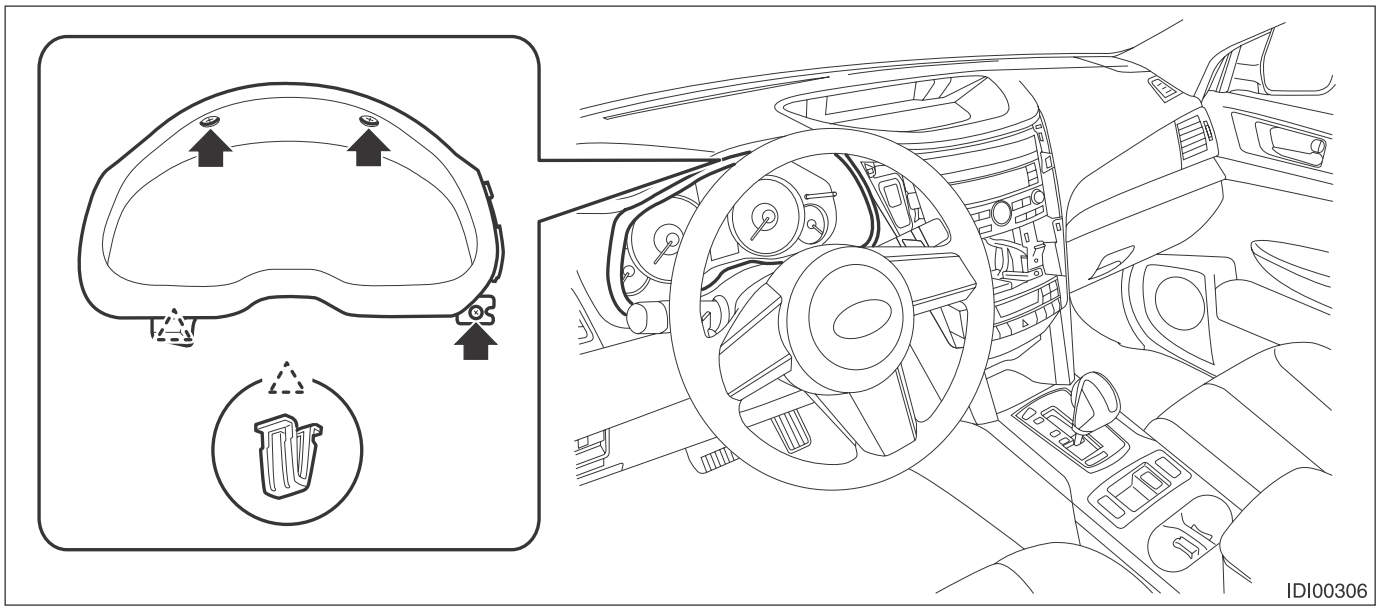

6) Remove the combination meter assembly.

CAUTION:
- **Be careful not to damage the meter or instrument panel.**
- **Pay particular attention to avoid damaging the meter glass.**

(1) Remove the screws and move the steering COMPL upper cover toward you.

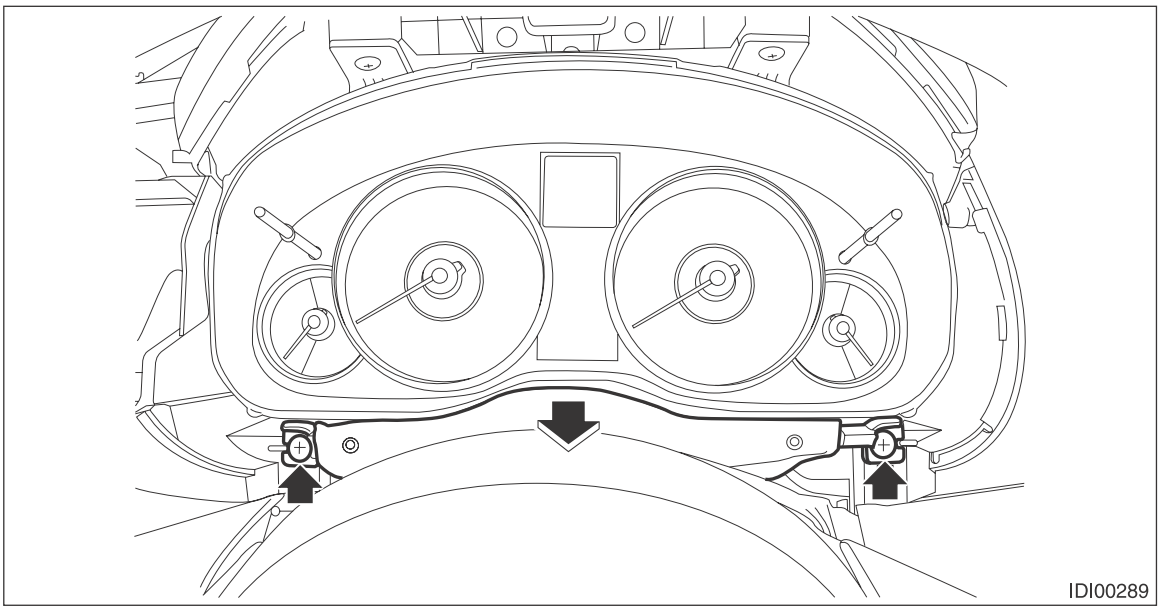

(2) Remove the screws.

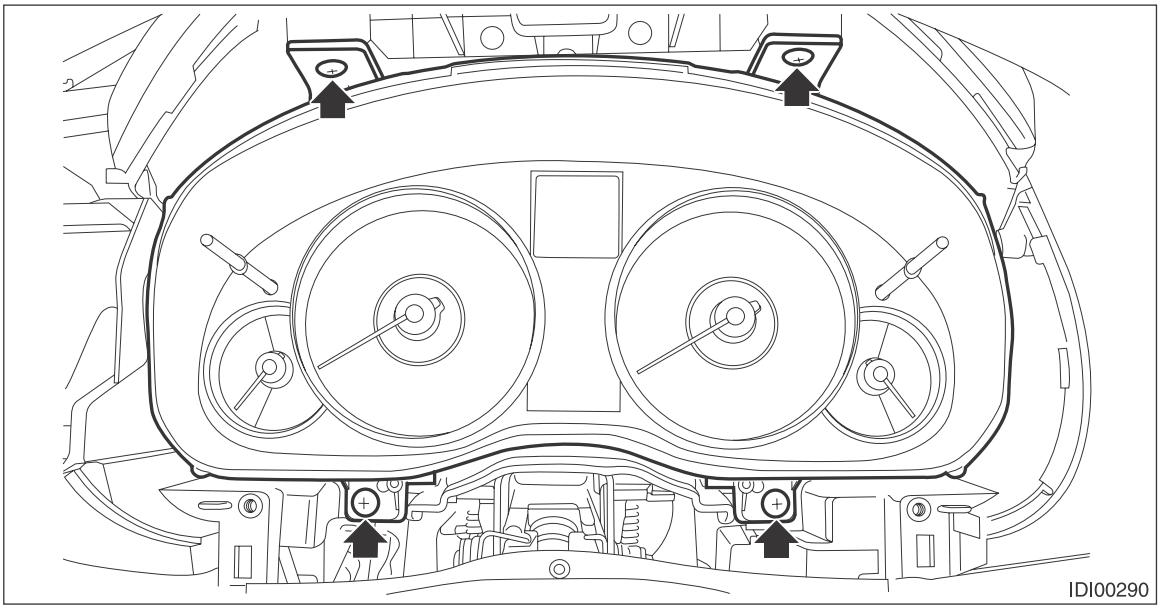

(3) Pull the combination meter toward you and disconnect the connector.

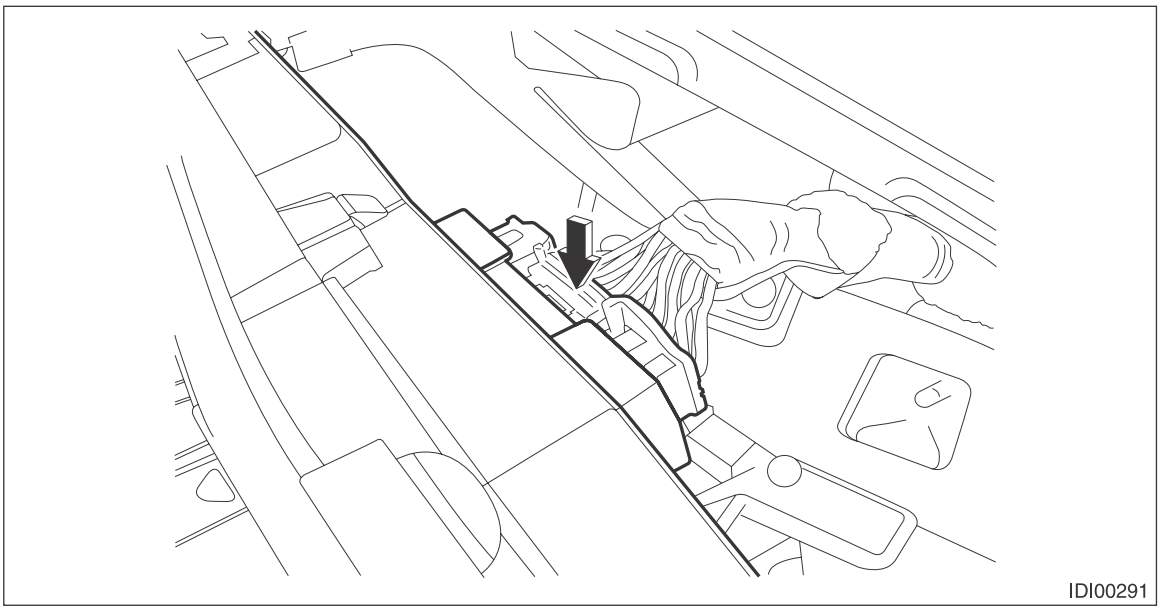

(4) Remove the combination meter assembly as shown in the figure.

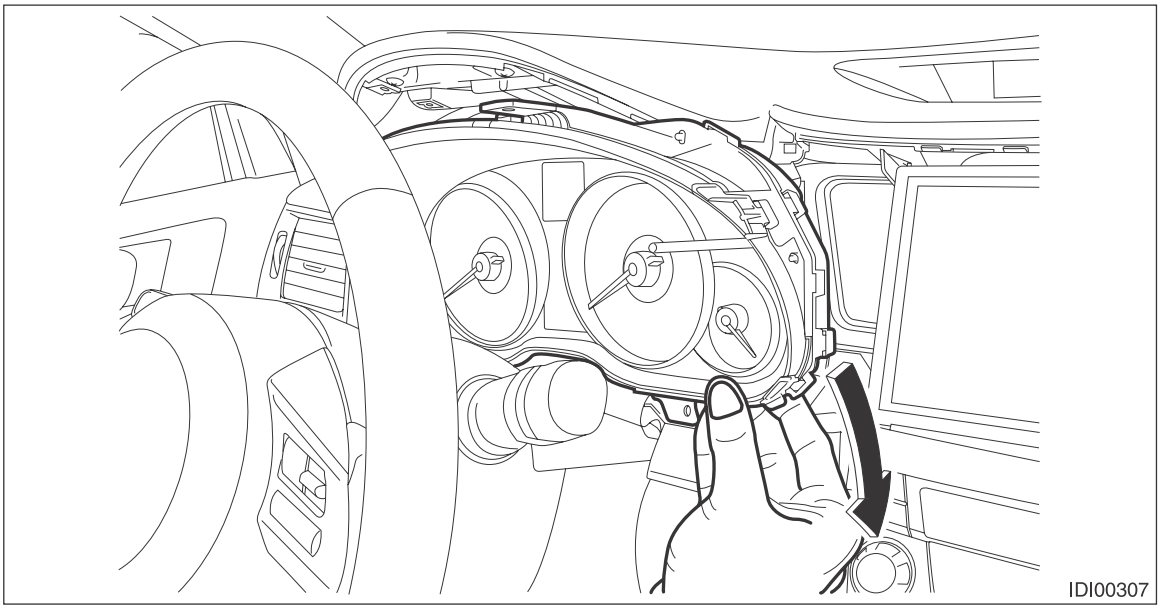

B: INSTALLATION

CAUTION:
- **Make sure the electrical connector is connected securely.**
- **Make sure that each meter operates normally.**
- **When the combination meter of model with immobilizer has been replaced, be sure to perform the registration of immobilizer.**

Install each part in the reverse order of removal.

C: DISASSEMBLY

1. DISASSEMBLY OF COMBINATION METER ASSEMBLY

CAUTION:
- **Use gloves to avoid damage and getting fingerprints on the glass surface and meter surfaces.**
- **Be careful not to apply excessive force to the trip knob.**
- **Be sure not to touch the meter indicator needle.**

Disengage the claw, and remove the meter glass (A) and meter visor (B) from the meter case assembly (C).

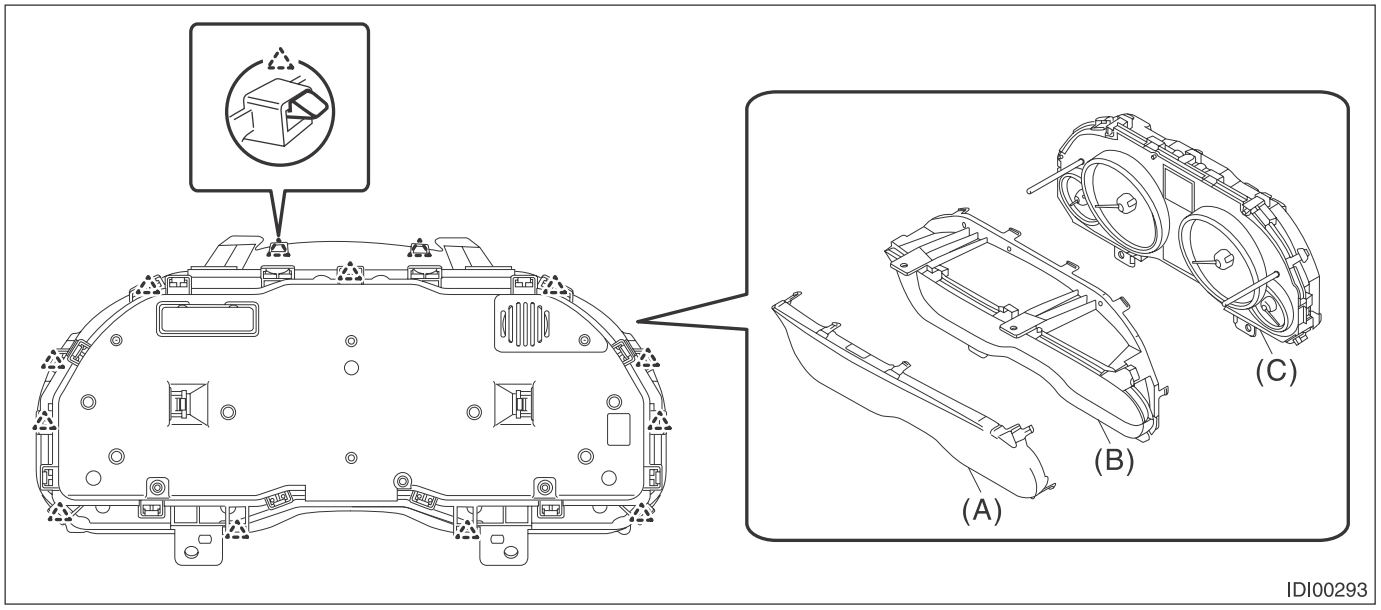

2. BULB REPLACEMENT

LEDs are used for all of warning lights and indicator lights of combination meters, replace the meter case assembly if faulty.

D: ASSEMBLY

Install each part in the reverse order of removal.

6. Speedometer

A: SPECIFICATION

Since the meter case assembly cannot be disassembled, do not remove or inspect the speedometer alone. (Do not remove the cover on the back surface.)

7. Tachometer

A: SPECIFICATION

Since the meter case assembly cannot be disassembled, do not remove or inspect the tachometer alone. (Do not remove the cover on the back surface.)

8. Fuel Gauge

A: SPECIFICATION

Since the meter case assembly cannot be disassembled, do not remove or inspect the fuel gauge alone. (Do not remove the cover on the back surface.)

9. ECO Gauge

A: SPECIFICATION

Since the meter case assembly cannot be disassembled, do not remove or inspect the ECO gauge alone. (Do not remove the cover on the back surface.)

10.Multi Display

A: REMOVAL

1) Disconnect the ground cable from battery.
2) Remove the center panel assembly.

CAUTION:
Do not put your finger on the fin of the air vent grille. Doing so may damage the fin.

(1) Attach the protective tape (a) to the meter visor.

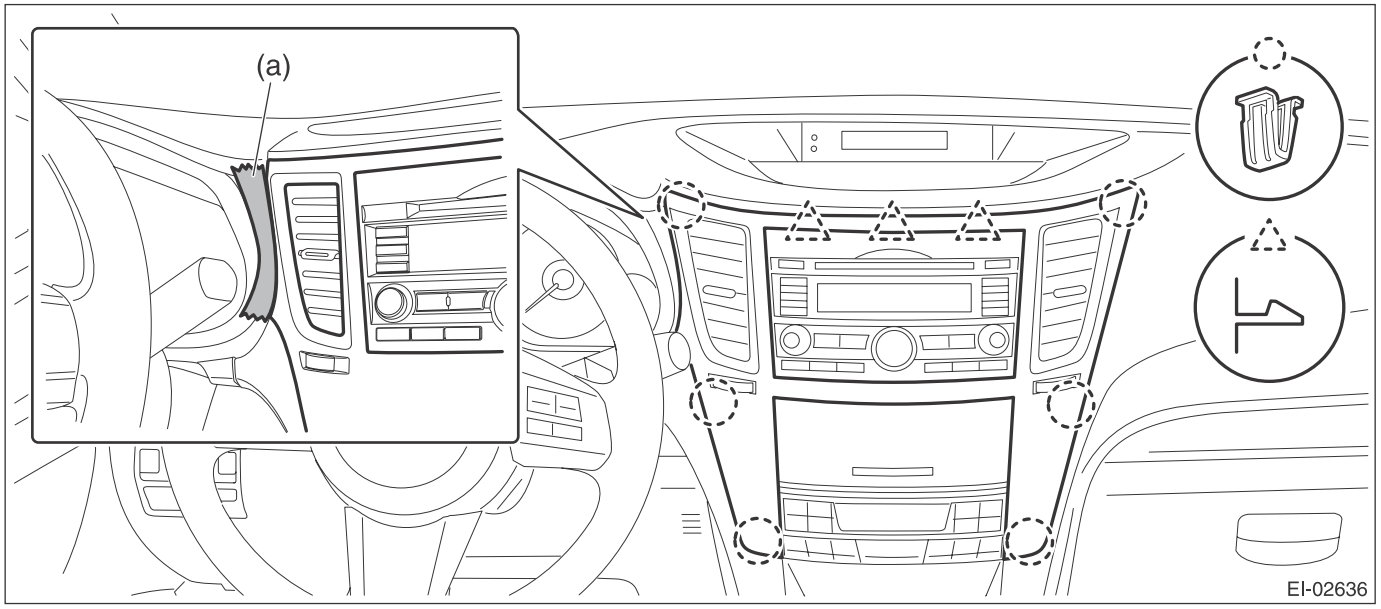

(2) Insert a finger into the air vent grille and release the left and right clips at the top of the center panel. (A), (B)
(3) Insert a finger into the air vent grille and release the left and right clips at the center of the center panel. (C), (D)

(4) Release the clips at the bottom of the center panel and remove the center panel assembly.

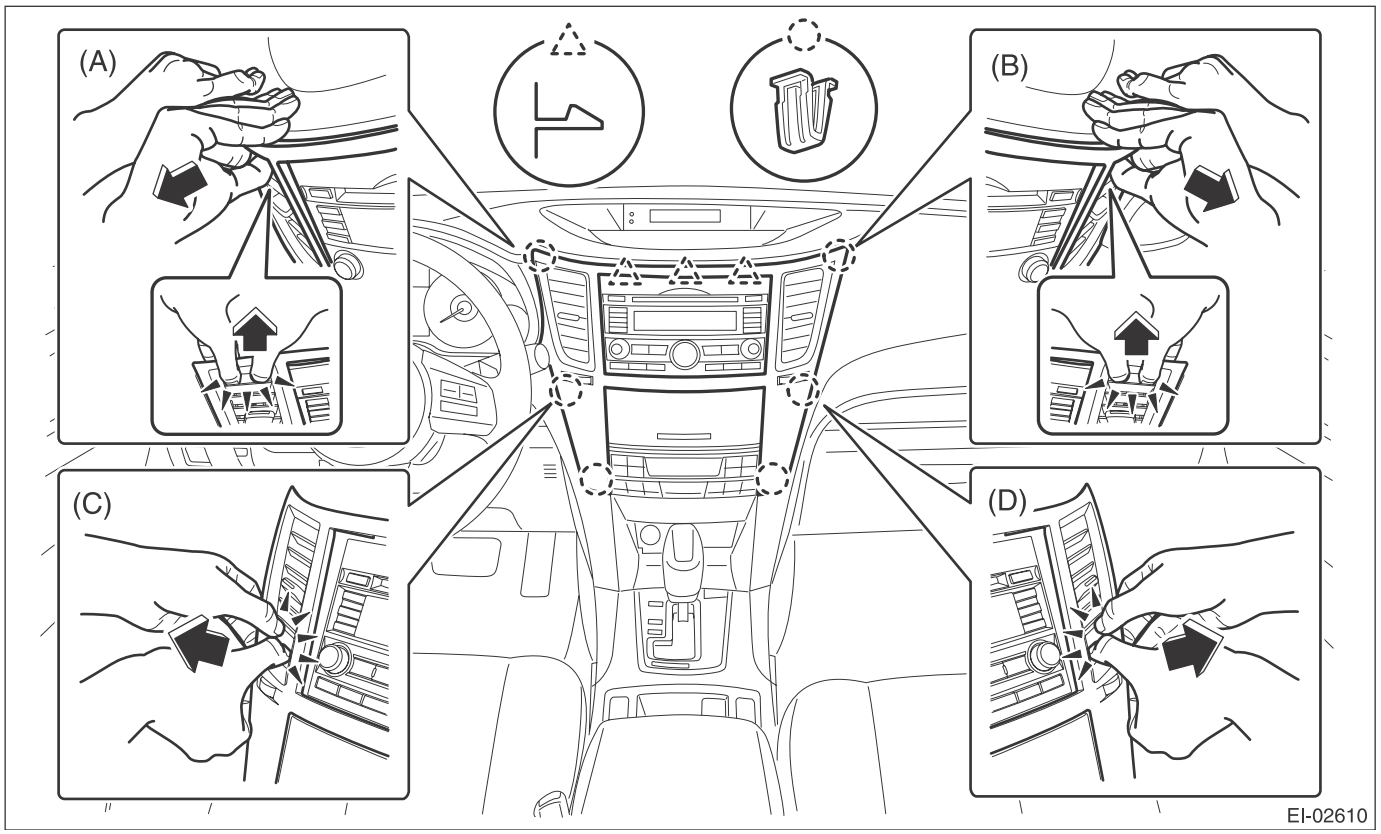

3) Remove the audio assembly.
(1) Remove the left and right screws, and partially pull the audio out from center console.
(2) Disconnect the connectors, and remove the audio assembly.

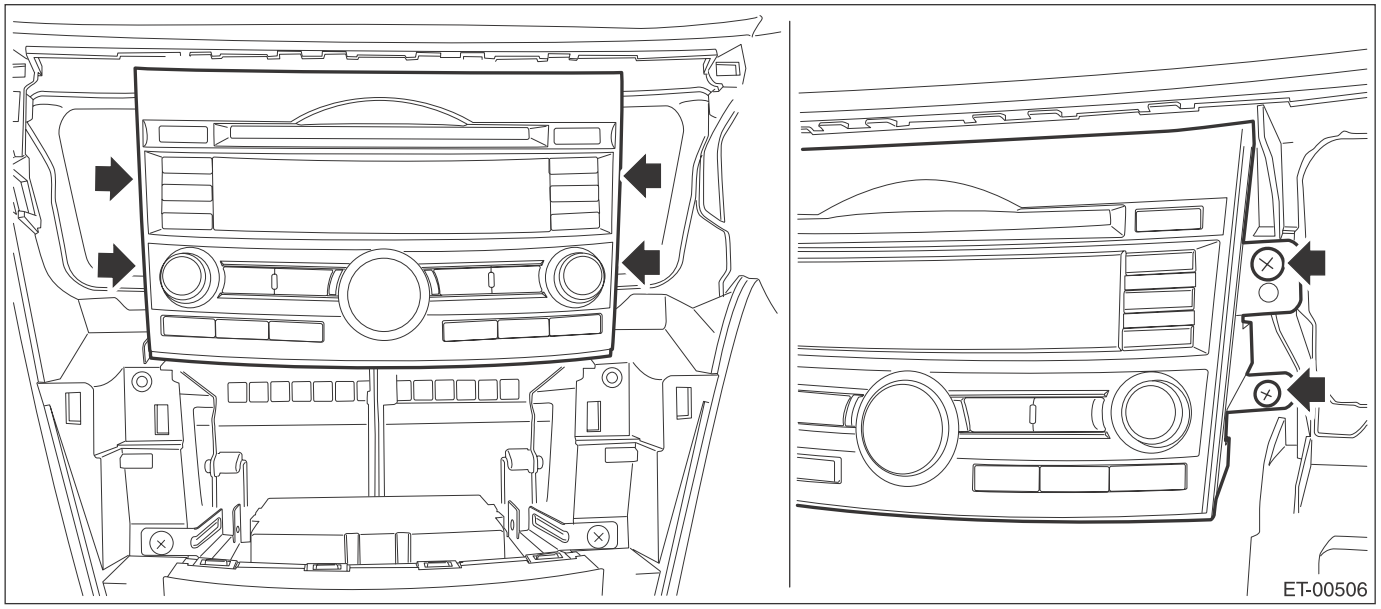

4) Remove the navigation assembly. (model with navigation)
(1) Remove the left and right screws.

(2) Disconnect the connectors, and remove the navigation assembly.

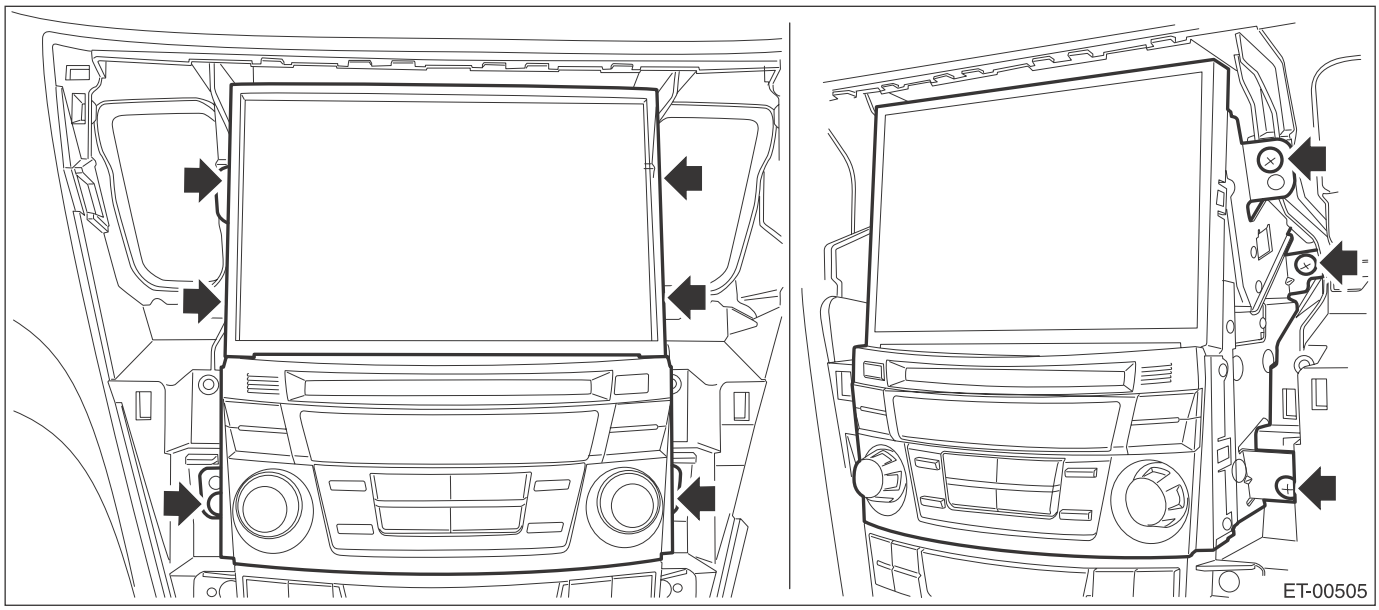

5) Remove the center speaker cover.
(1) Push up the center speaker cover from the audio space.
(2) Disconnect the claws and hooks and remove the center speaker cover.

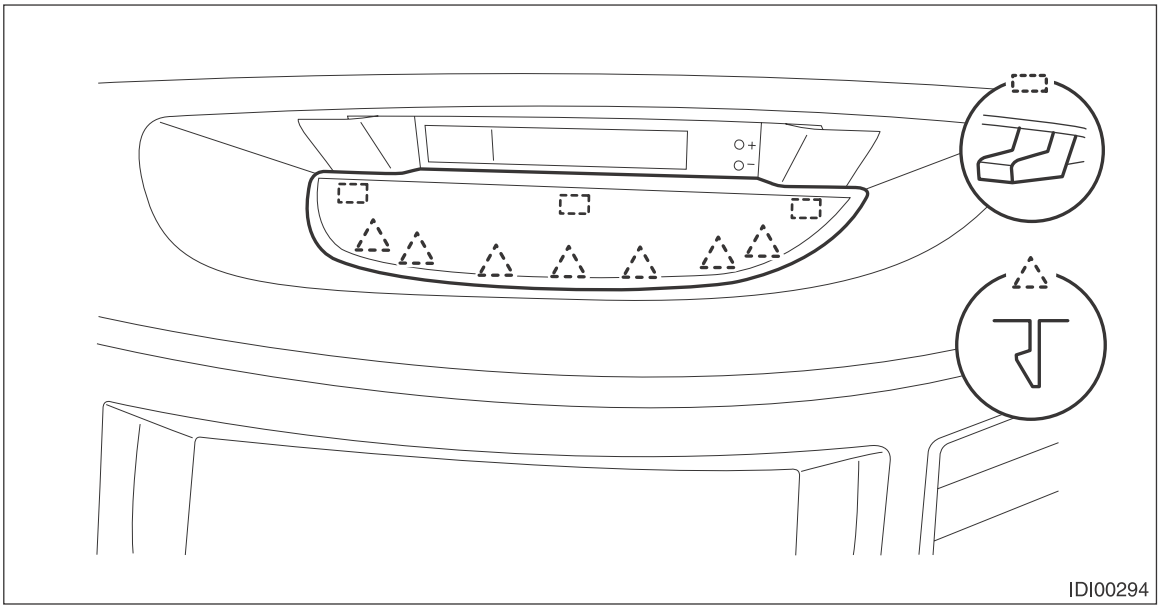

6) Remove the multi display.

CAUTION:
Be careful not to damage the multi display or instrument panel.
(1) Release the clips and claws, detach the multi display panel LWR.

(2) Remove the screws and pull out the multi display toward you to disconnect the connectors.

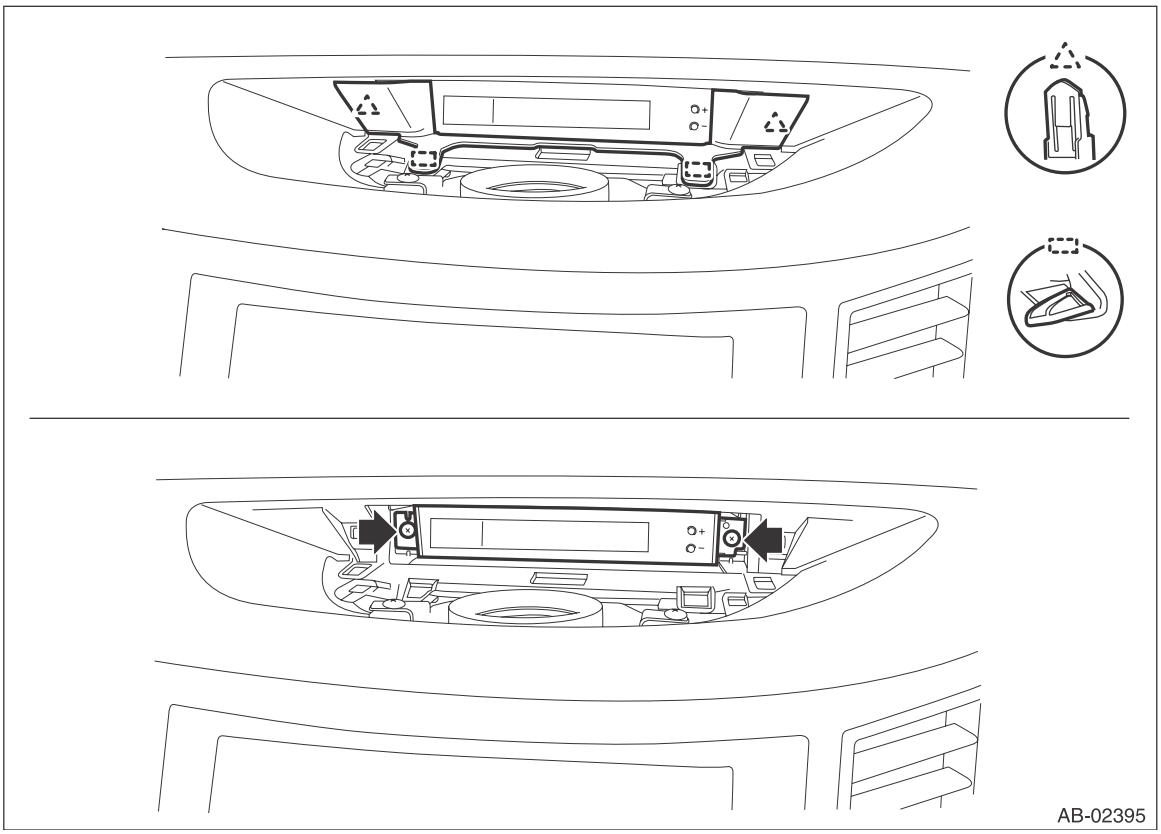

B: INSTALLATION

CAUTION:
- **Make sure the electrical connector is connected securely.**
- **Make sure that the multi display operates normally.**

Install each part in the reverse order of removal.

SEATS

SE

Page

1. General Description 2
2. Front Seat 10
3. Rear Seat 32
4. Power Seat System 54
5. Seat Heater System 63

1. General Description

A: COMPONENT

1. FRONT SEAT

- Manual seat LH

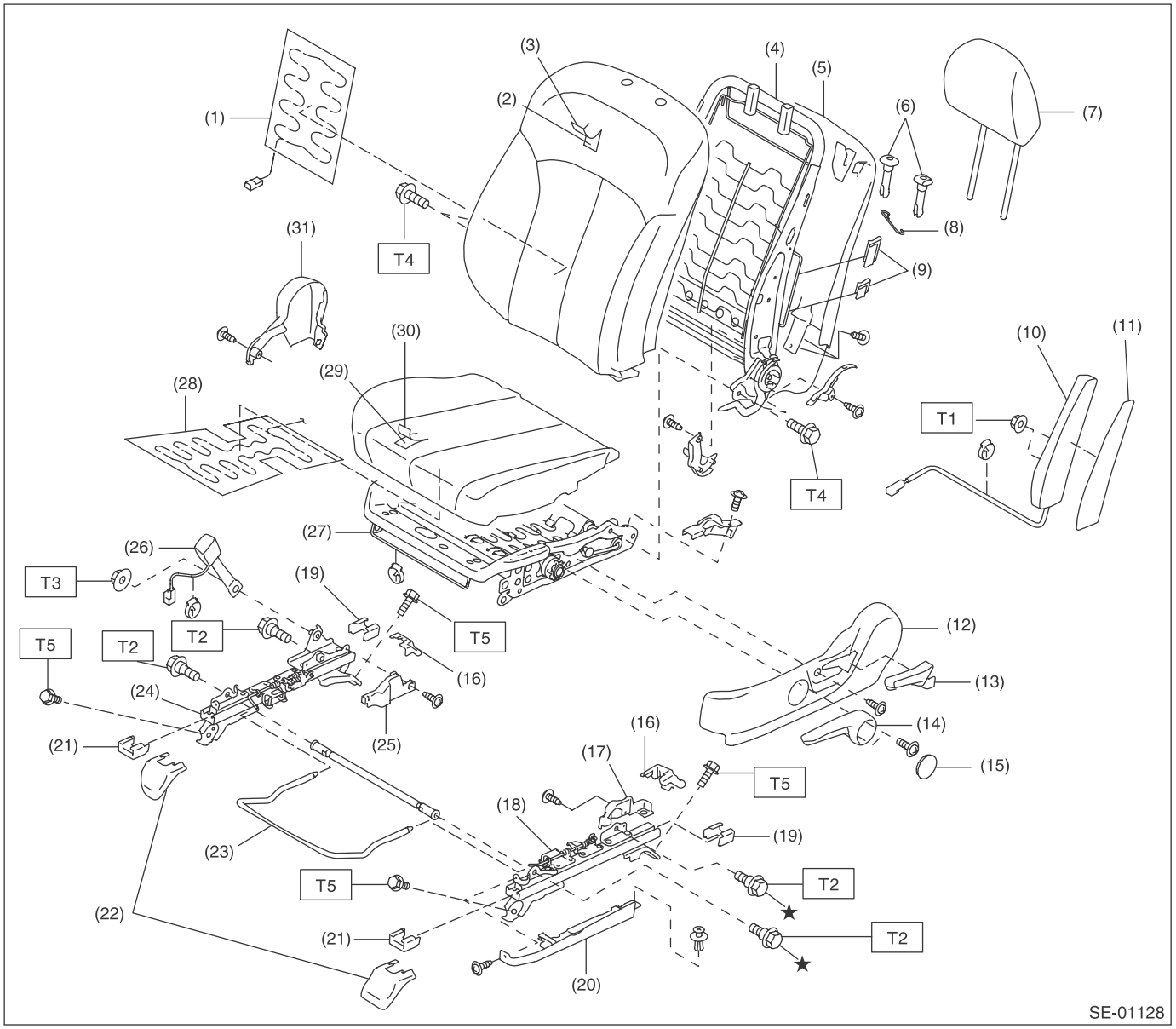

(1) Backrest heater ASSY
(2) Backrest pad
(3) Backrest cover
(4) Backrest frame ASSY
(5) Backrest back cover
(6) Headrest bushing
(7) Headrest ASSY
(8) Flat mat hook
(9) S hook
(10) Side airbag module ASSY
(11) Side airbag tape
(12) Seat side cover OUT
(13) Reclining lever
(14) Lifter lever
(15) Lifter lever cap
(16) Rear bolt cover
(17) Riser cover INN LH
(18) Slide rail ASSY LH
(19) Rail end cap rear
(20) Riser cover OUT
(21) Rail end cap front
(22) Front bolt cover
(23) Sliding adjust bar
(24) Slide rail ASSY RH
(25) Riser cover INN RH
(26) Inner seat belt ASSY
(27) Cushion frame ASSY
(28) Cushion heater ASSY
(29) Cushion pad
(30) Cushion cover
(31) Seat side cover IN

Tightening torque:N·m (kgf-m, ft-lb)

T1: 6 (0.61, 4.4)
T2: 18 (1.84, 13.3)
T3: 38 (3.87, 28.0)
T4: 52 (5.3, 38.4)
T5: 53 (5.4, 39.1)

- Power seat LH

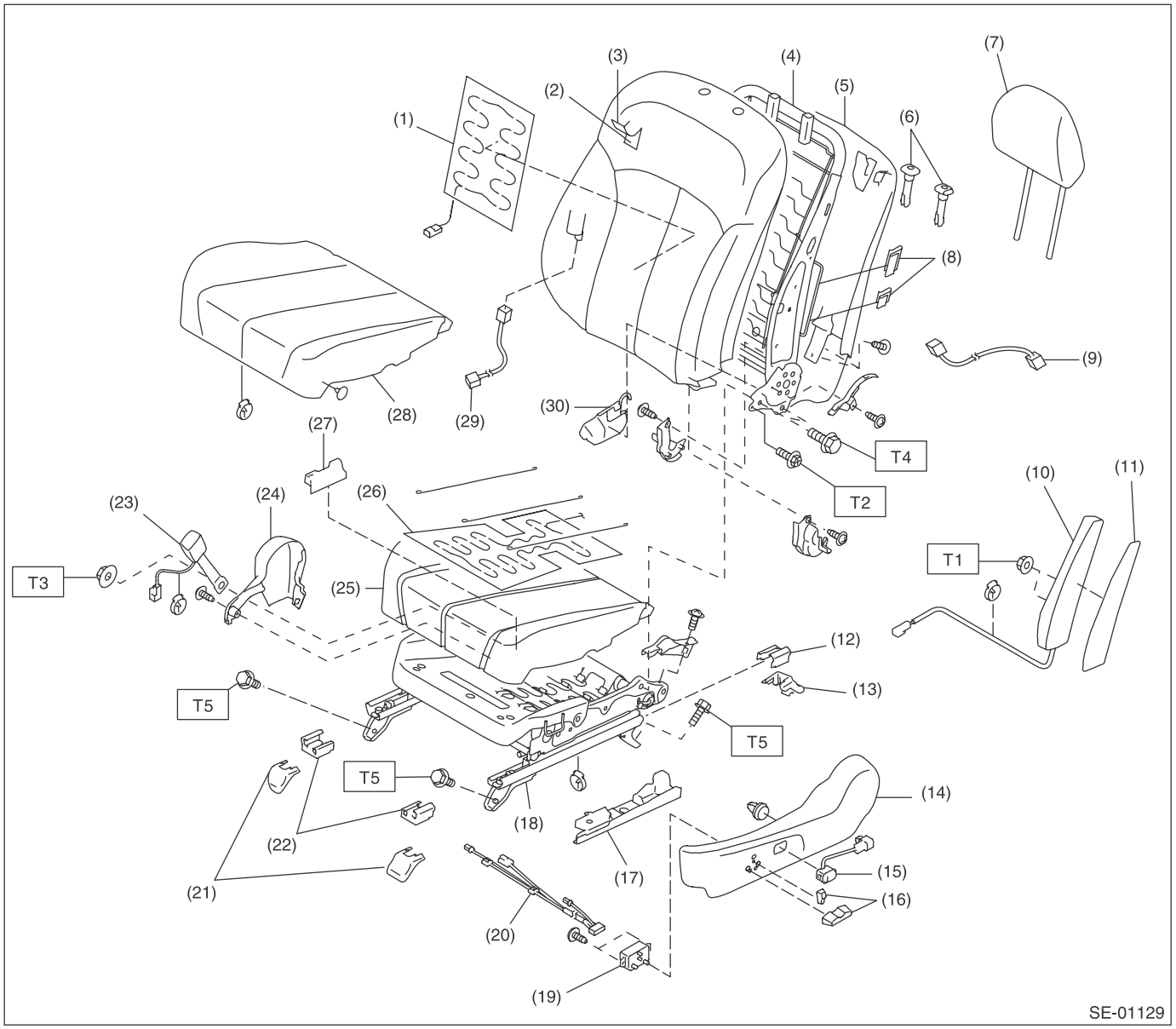

(1) Backrest heater ASSY
(2) Backrest pad
(3) Backrest cover
(4) Backrest frame ASSY
(5) Backrest back cover
(6) Headrest bushing
(7) Headrest ASSY
(8) S hook
(9) Reclining motor harness
(10) Side airbag module ASSY
(11) Side airbag tape
(12) Rail end cap rear
(13) Rear bolt cover
(14) Seat side cover OUT
(15) Lumber switch ASSY
(16) Power seat switch knob
(17) Riser cover OUT LH
(18) Seat cushion frame ASSY
(19) Power seat switch ASSY
(20) Power seat switch harness
(21) Front bolt cover
(22) Rail end cap front
(23) Inner seat belt ASSY
(24) Seat side cover IN
(25) Cushion pad
(26) Cushion heater ASSY
(27) Riser cover INN RH
(28) Cushion cover
(29) Lumber motor harness
(30) Backrest inner cover

Tightening torque:N·m (kgf-m, ft-lb)
T1: 6 (0.61, 4.4)
T2: 18 (1.84, 13.3)
T3: 38 (3.87, 28.0)
T4: 52 (5.3, 38.4)
T5: 53 (5.4, 39.1)

- Manual seat RH

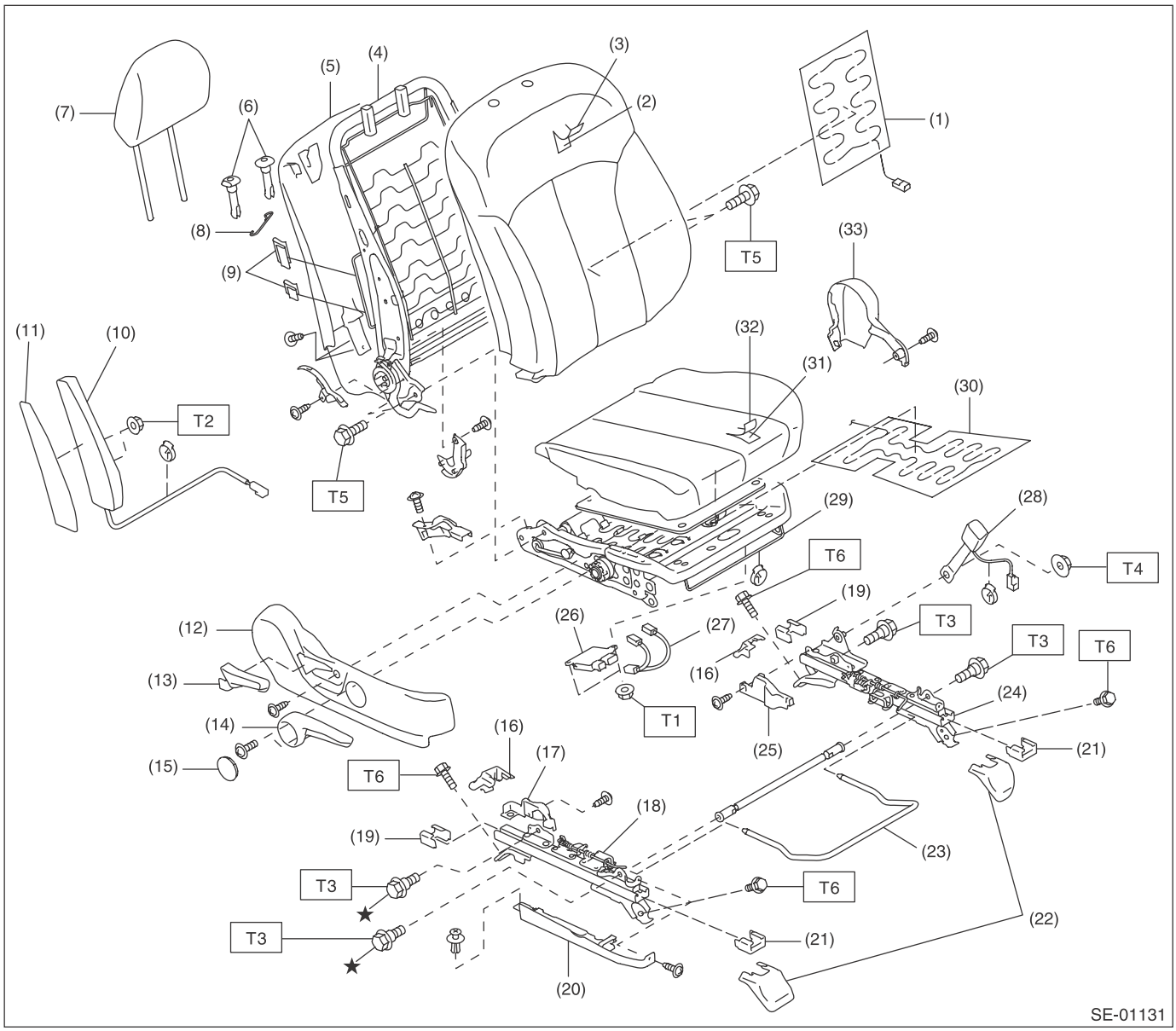

(1)	Backrest heater ASSY	(15)	Lifter lever cap	(29)	Cushion frame ASSY
(2)	Backrest pad	(16)	Rear bolt cover	(30)	Cushion heater ASSY
(3)	Backrest cover	(17)	Riser cover INN RH	(31)	Cushion pad
(4)	Backrest frame ASSY	(18)	Slide rail ASSY RH	(32)	Cushion cover
(5)	Backrest back cover	(19)	Rail end cap rear	(33)	Seat side cover IN
(6)	Headrest bushing	(20)	Riser cover OUT		
(7)	Headrest ASSY	(21)	Rail end cap front		
(8)	Flat mat hook	(22)	Front bolt cover		
(9)	S hook	(23)	Sliding adjust bar		
(10)	Side airbag module ASSY	(24)	Slide rail ASSY LH		
(11)	Side airbag tape	(25)	Riser cover INN LH		
(12)	Seat side cover OUT	(26)	Occupant detection control module		
(13)	Reclining lever	(27)	Occupant detection control module harness		
(14)	Lifter lever	(28)	Inner seat belt ASSY		

Tightening torque:N·m (kgf-m, ft-lb)

T1: 5.9 (0.6, 4.4)

T2: 6 (0.61, 4.4)

T3: 18 (1.84, 13.3)

T4: 38 (3.87, 28.0)

T5: 52 (5.3, 38.4)

T6: 53 (5.4, 39.1)

- Power seat RH

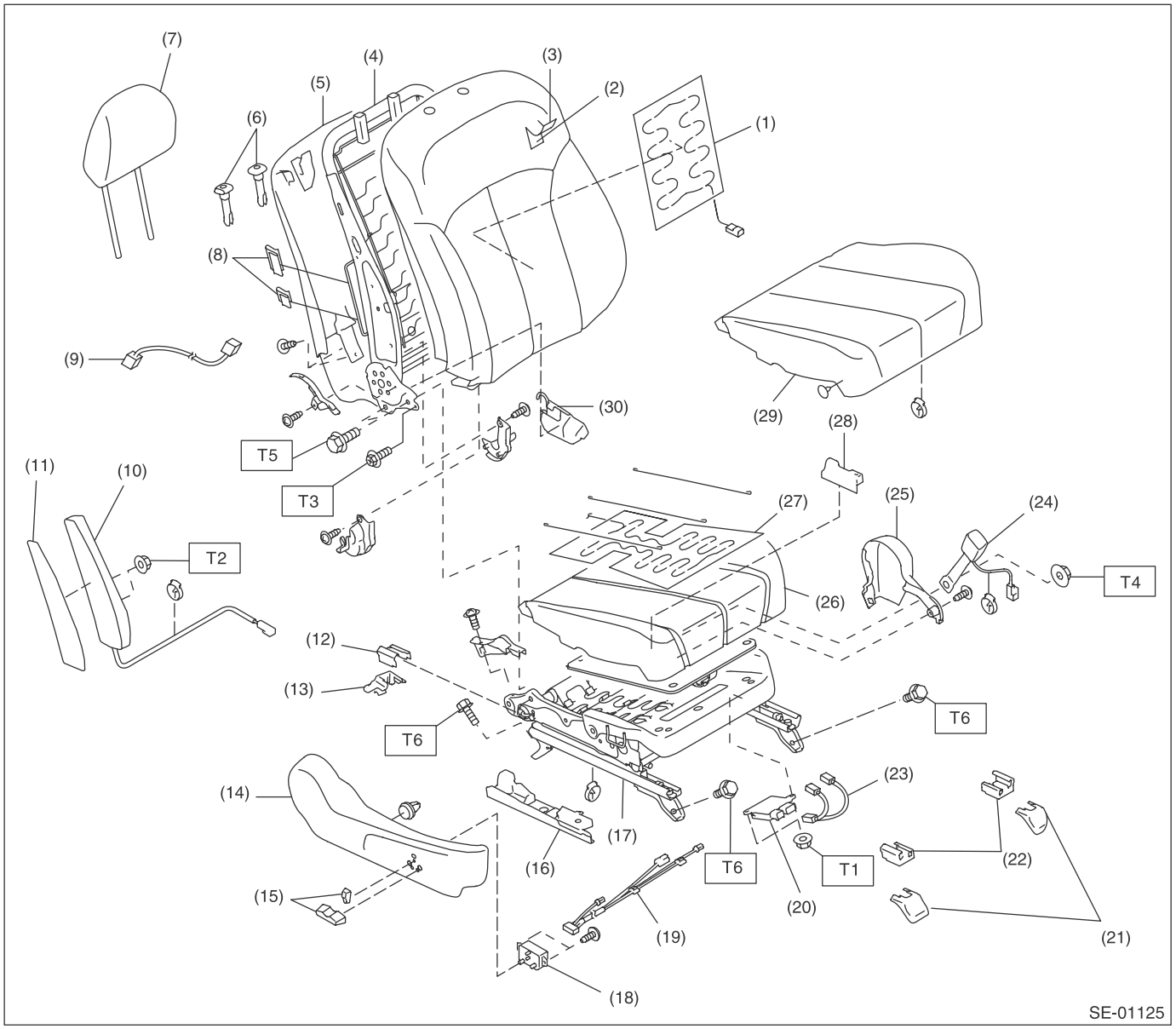

(1)	Backrest heater ASSY	(14)	Seat side cover OUT	(27)	Cushion heater ASSY
(2)	Backrest pad	(15)	Power seat switch knob	(28)	Riser cover INN RH
(3)	Backrest cover	(16)	Riser cover OUT LH	(29)	Cushion cover
(4)	Backrest frame ASSY	(17)	Seat cushion frame ASSY	(30)	Backrest inner cover
(5)	Backrest back cover	(18)	Power seat switch ASSY		
(6)	Headrest bushing	(19)	Power seat harness	***Tightening torque:N·m (kgf-m, ft-lb)***	
(7)	Headrest ASSY	(20)	Occupant detection control module	***T1:***	***5.9 (0.6, 4.4)***
(8)	S hook	(21)	Front bolt cover	***T2:***	***6 (0.61, 4.4)***
(9)	Reclining motor harness	(22)	Rail end cap front	***T3:***	***18 (1.84, 13.3)***
(10)	Side airbag module ASSY	(23)	Occupant detection control module harness	***T4:***	***38 (3.87, 28.0)***
(11)	Side airbag tape	(24)	Inner seat belt ASSY	***T5:***	***52 (5.3, 38.4)***
(12)	Rail end cap rear	(25)	Seat side cover IN	***T6:***	***53 (5.4, 39.1)***
(13)	Rear bolt cover	(26)	Cushion pad		

2. REAR SEAT (SEDAN MODEL)

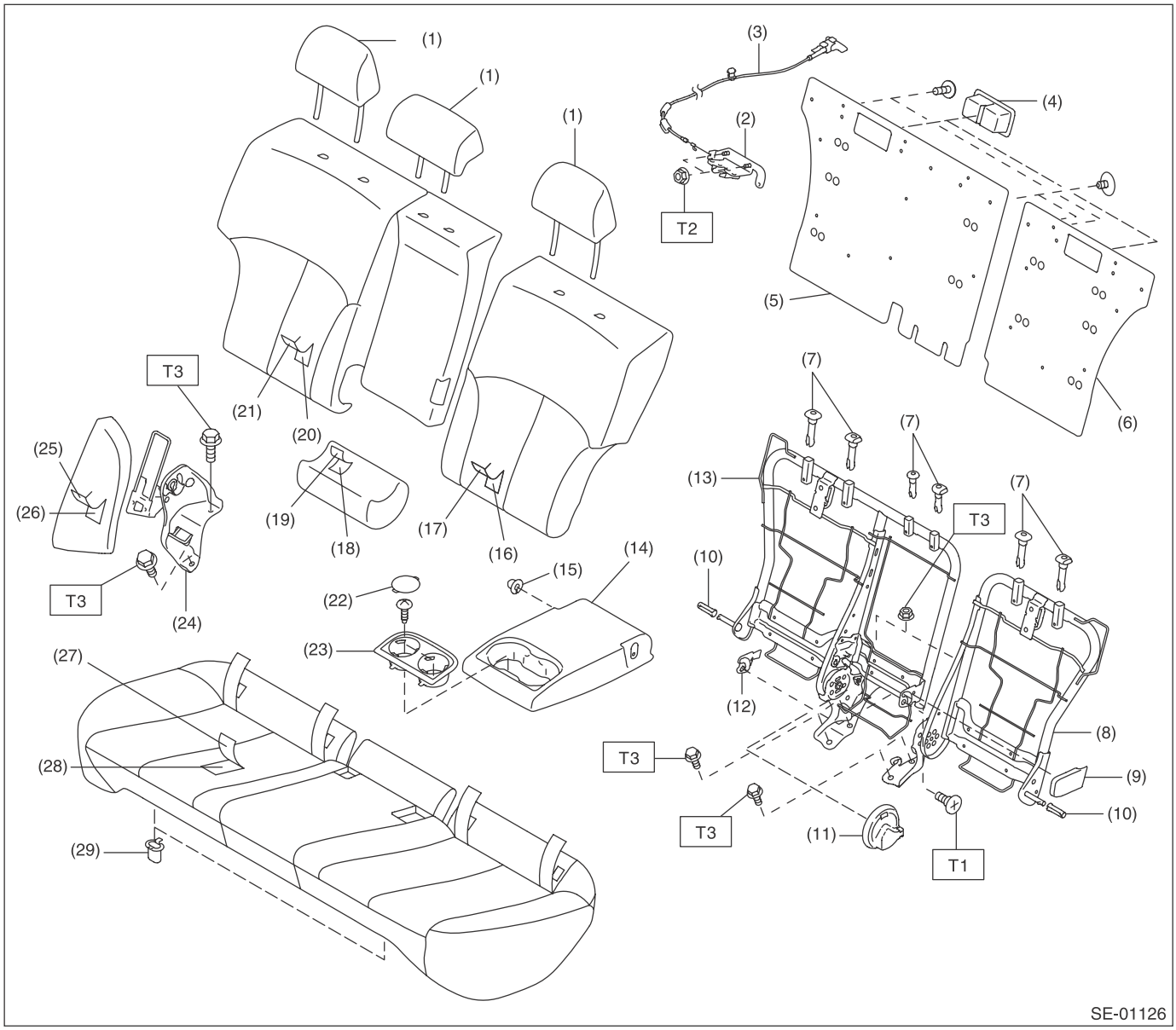

(1) Headrest ASSY
(2) Backrest lock ASSY
(3) Release lever ASSY
(4) Backrest back board RH
(5) Backrest striker cover
(6) Backrest back board LH
(7) Headrest lock bushing
(8) Backrest frame ASSY LH
(9) Armrest hinge cover
(10) Backrest hinge bushing
(11) Reclining hinge cover RH
(12) Armrest hinge bushing
(13) Backrest frame ASSY RH
(14) Armrest ASSY
(15) Armrest bushing
(16) Backrest pad LH
(17) Backrest cover LH
(18) Seat center pad
(19) Seat center cover
(20) Backrest pad RH
(21) Backrest cover RH
(22) Cup holder rubber
(23) Cup holder ASSY
(24) Hinge ASSY
(25) Backrest side cover
(26) Backrest side pad
(27) Seat cushion cover
(28) Seat cushion pad
(29) Hook

Tightening torque:N·m (kgf-m, ft-lb)
T1: 9.8 (1.0, 7.2)
T2: 24.5 (2.5, 18.1)
T3: 53 (5.4, 39.1)

3. REAR SEAT (OUTBACK MODEL)

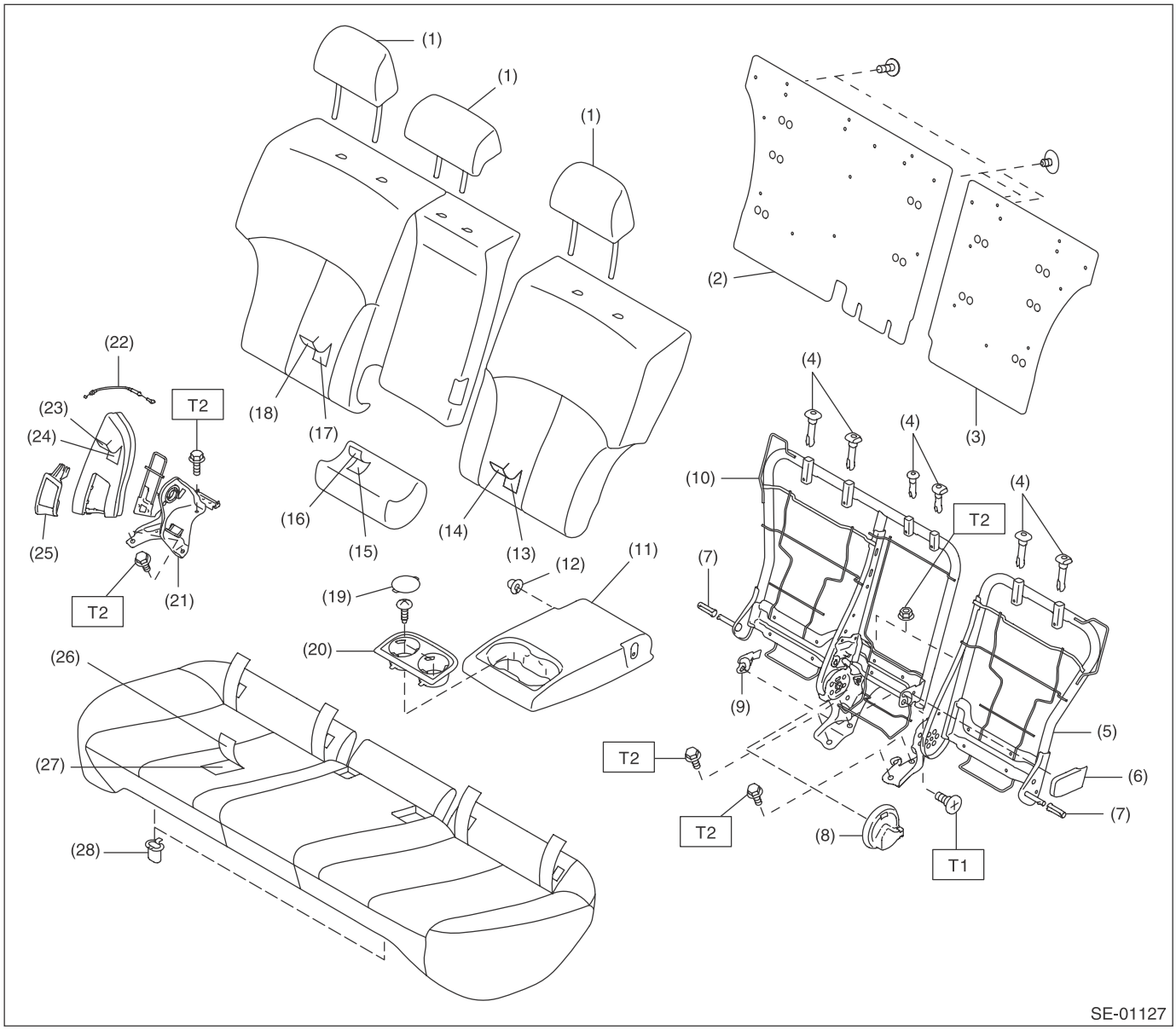

(1) Headrest ASSY
(2) Backrest back board RH
(3) Backrest back board LH
(4) Headrest lock bushing
(5) Backrest frame ASSY LH
(6) Armrest hinge cover
(7) Backrest hinge bushing
(8) Reclining hinge cover RH
(9) Armrest hinge bushing
(10) Backrest frame ASSY RH
(11) Armrest ASSY
(12) Armrest bushing
(13) Backrest pad LH
(14) Backrest cover LH
(15) Seat center pad
(16) Seat center cover
(17) Backrest pad RH
(18) Backrest cover RH
(19) Cup holder rubber
(20) Cup holder ASSY
(21) Hinge ASSY
(22) Reclining cable
(23) Backrest side cover
(24) Backrest side pad
(25) Reclining lever ASSY
(26) Seat cushion cover
(27) Seat cushion pad
(28) Hook

Tightening torque:N·m (kgf-m, ft-lb)
T1: 24.5 (2.5, 18.1)
T2: 53 (5.4, 39.1)

B: CAUTION

When removing the front seat from a vehicle, follow the safety instructions given in the airbag section.

C: PREPARATION TOOL

1. GENERAL TOOL

TOOL NAME	Remarks
Long nose plier	Used for removing the hog ring.
Hog ring pliers	Used for installing the hog ring.
Circuit tester	Used for checking voltage and continuity.

2. Front Seat

A: REMOVAL

CAUTION:
The airbag system is fitted with a backup power supply. After disconnecting the battery ground cable, the airbag may deploy if you do not wait for 60 seconds before starting the service of airbag system.

1) Remove the headrest.
2) Disconnect the ground cable from battery and wait for at least 60 seconds before starting work.

NOTE:
For the power seat, remove the slide rail installing bolt before removing the battery ground terminal.

3) Remove the bolts from the slide rail.
   (1) Tilt the backrest forward and move the seat to the front most position.
   (2) Remove the rear bolt cover (A) and remove the two bolts.
   (3) Move the seat to the rearmost position.
   (4) Remove the front bolt cover (B) and remove the two bolts.

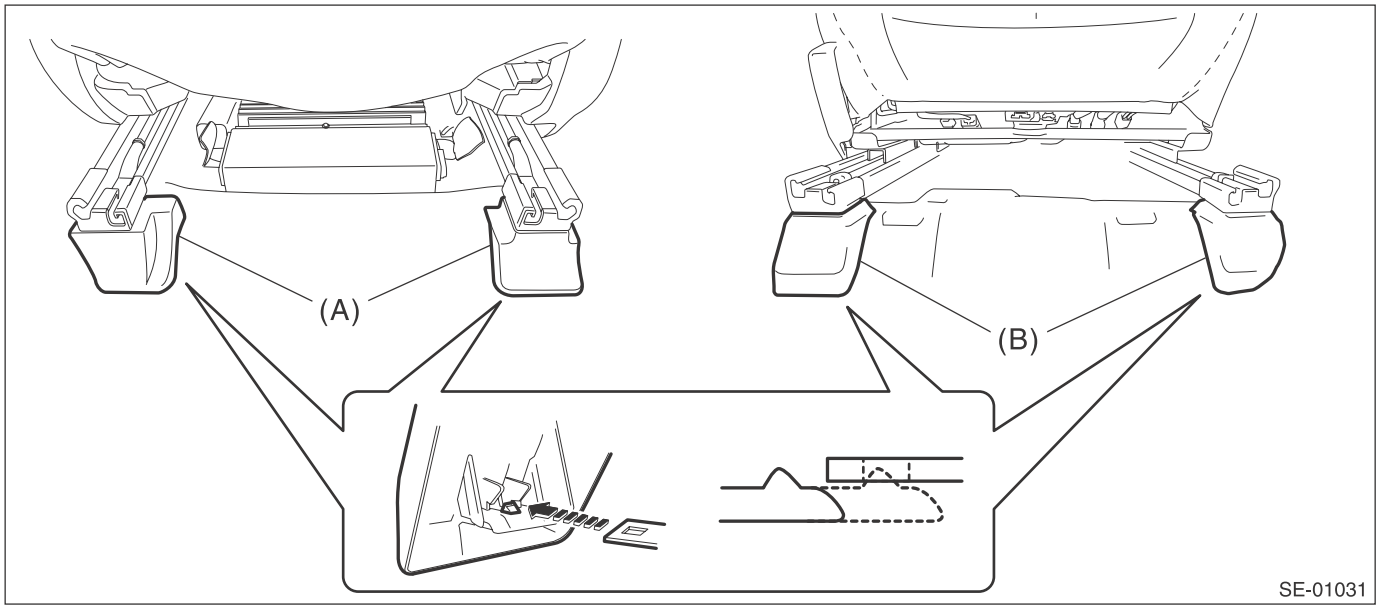

4) Disconnect the connector under the seat.

CAUTION:
Disconnect the ground cable from battery, and wait 60 seconds before disconnecting the connector.

- Seat belt warning light connector (driver's seat)
- Occupant detection system harness connector (passenger's seat)
- Side airbag connector
- Seat heater connector (model with seat heater)
- Power seat connector (model with power seats)

5) Remove the front seat from vehicle.

B: INSTALLATION

Install each part in the reverse order of removal.

CAUTION:

• The seat mounting bolts differ between the front mounting points and the rear mounting points. Make sure that you are using correct bolts at correct positions.

• Tighten the slide rail installing bolt gradually in several steps to the specified torque in the order as shown in the figure.

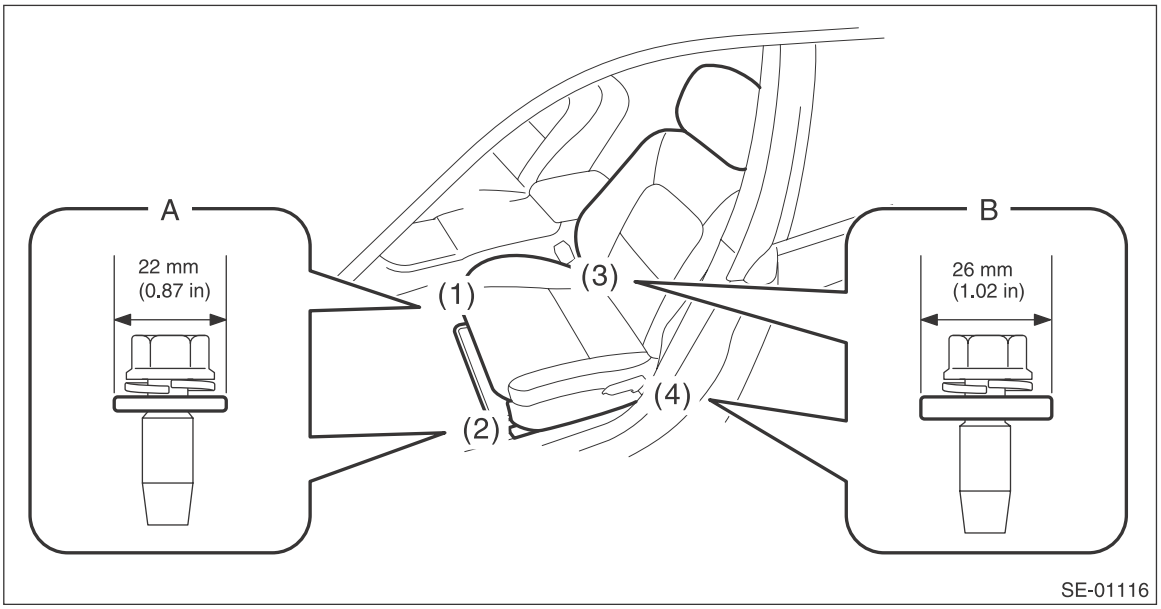

- **Front (bolt A): Washer diameter 22 mm (0.87 in)**
- **Rear (bolt B): Washer diameter 26 mm (1.02 in)**

Tightening torque:

Front seat assembly: 53 N·m (5.4 kgf-m, 39.1 ft-lb)

C: DISASSEMBLY

1. DRIVER SEAT (MANUAL SEAT)

CAUTION:
Make sure how the harnesses of the side airbag and inner seat belt are routed before assembling to avoid misarranging. Incorrect harness routing during assembly can result in pinched harnesses or short circuits.

1) Remove the seat from vehicle. <Ref. to SE-10, REMOVAL, Front Seat.>
2) Remove the seat lifter lever.
   (1) Using a flat tip screwdriver, remove the seat lifter lever cover (a).
   (2) Remove the screw and remove the seat lifter lever.

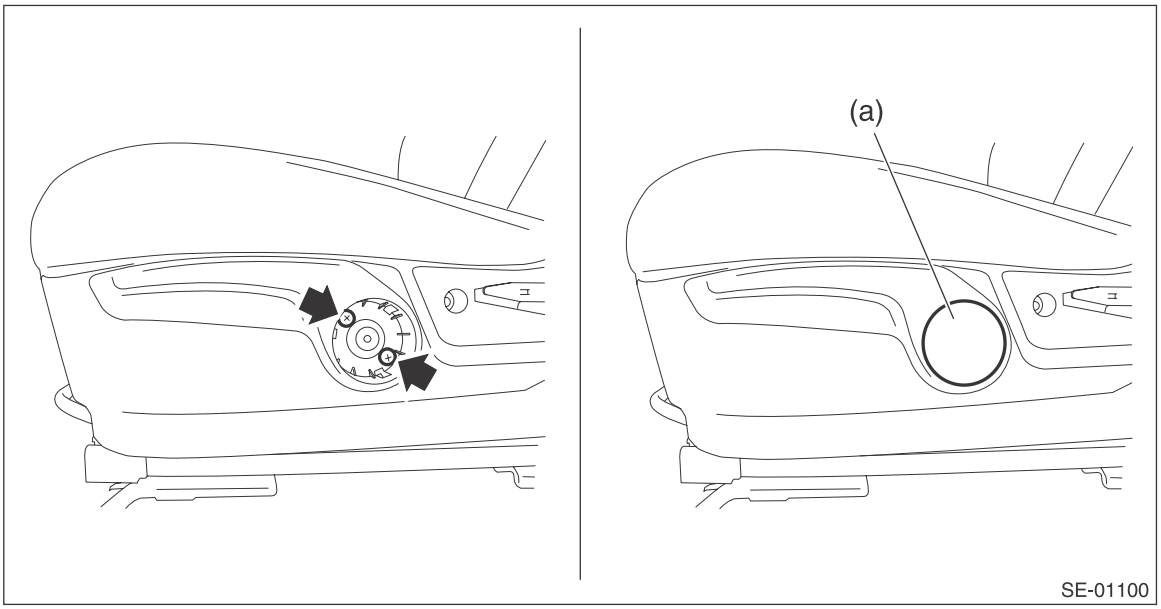

3) Remove the reclining lever cover.
   (1) Pull up the reclining lever and release the claws on the back.
   (2) Pull out the reclining lever cover.

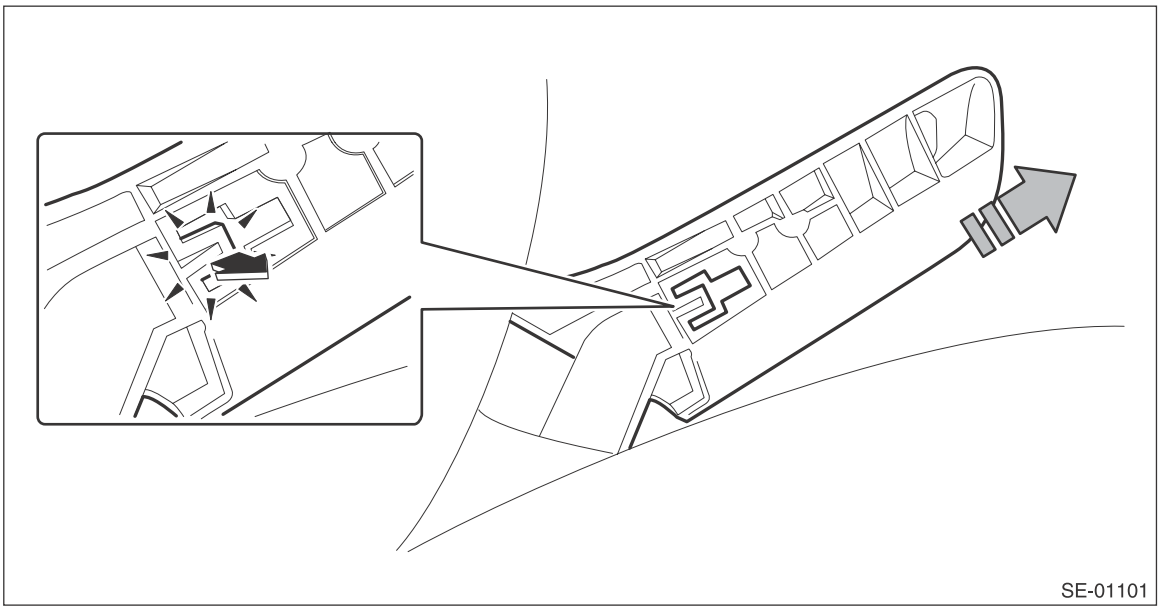

4) Remove the seat side cover OUT.
   (1) Remove the screws.
   (2) Release the claw in the upper section of the seat side cover.
   (3) Release the claw in the rear section of the seat side cover.

(4) Release the claw in the front section of the seat side cover, then remove the seat side cover OUT.

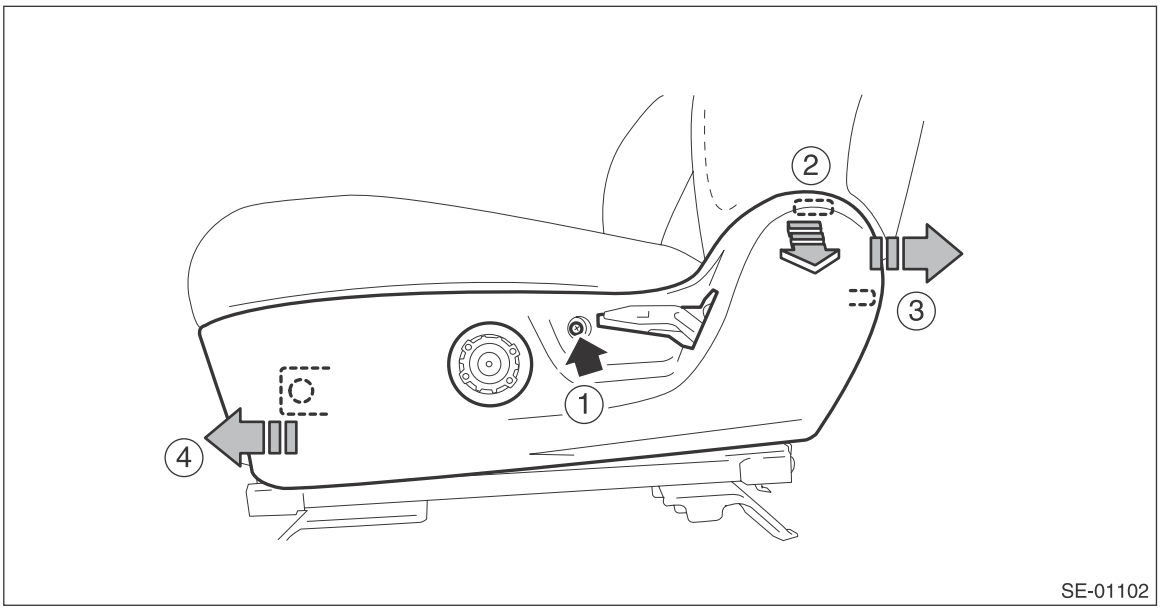

5) Remove the inner seat belt assembly.
(1) Remove the nut and remove the inner seat belt assembly.
(2) Remove the clip for the inner seat belt harness located under the seat cushion.

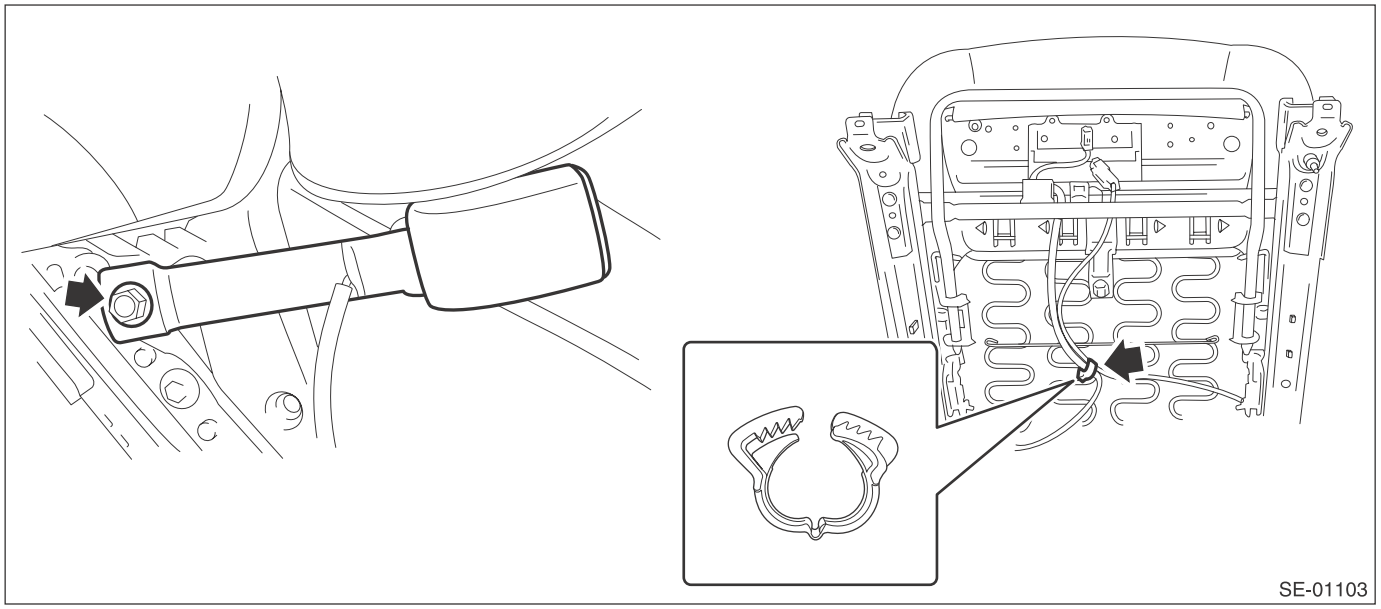

6) Remove the seat side cover IN.
(1) Remove the screws.
(2) Release the claw in the upper section of the seat side cover.

(3) Release the claw in the rear section of the seat side cover, then remove the seat side cover IN.

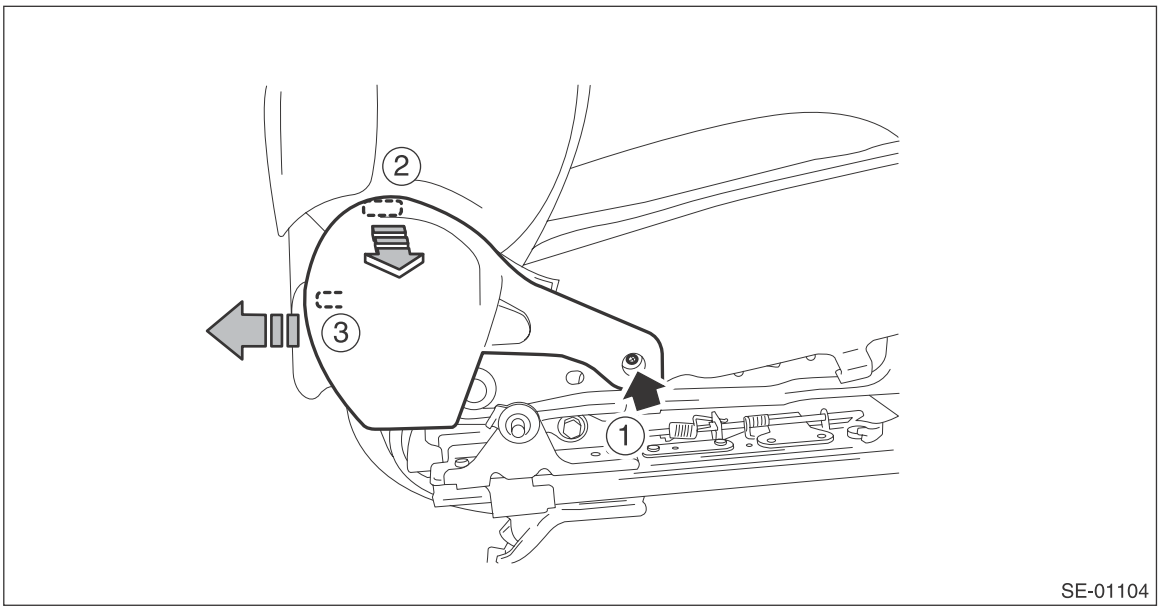

7) Separate the backrest assembly and the seat cushion assembly.
(1) Remove the clip for the side airbag harness located under the seat cushion. (seat with side airbag)
(2) Remove the bolts from the right and left reclining hinges.
(3) While taking care not to damage the airbag harness, separate the backrest assembly and the seat cushion assembly.

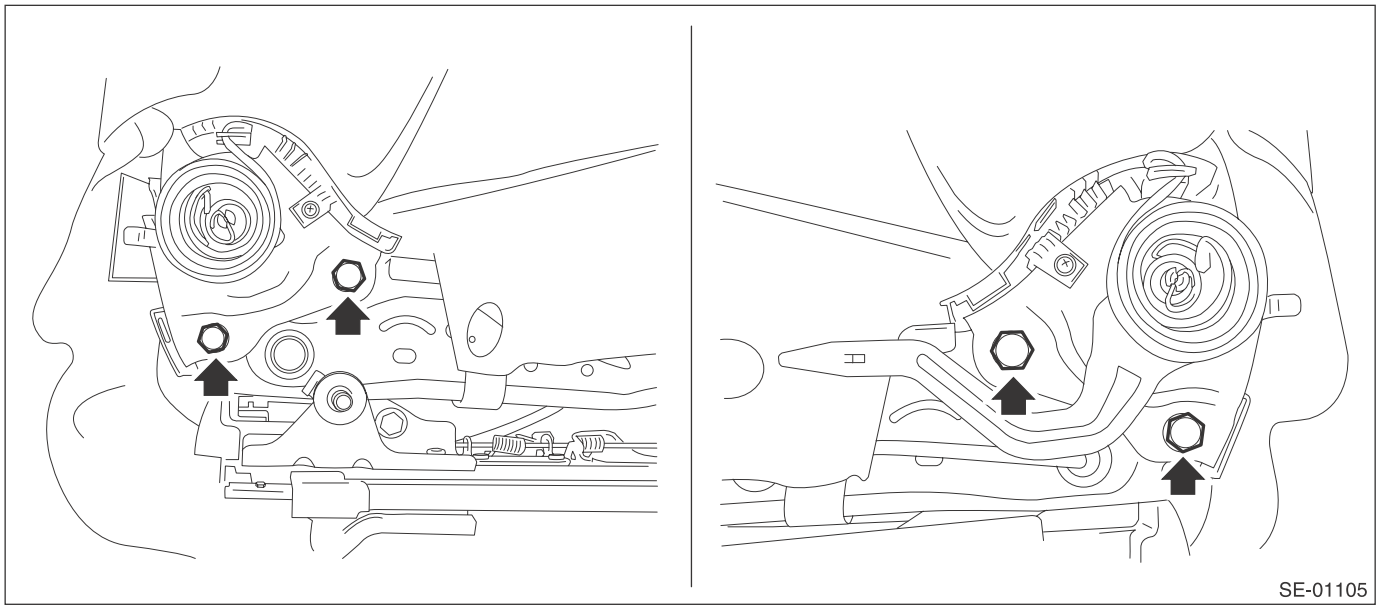

8) Remove the sliding adjuster bar.
(1) Remove the left and right spring locks.

(2) Pull out the sliding adjust bar.

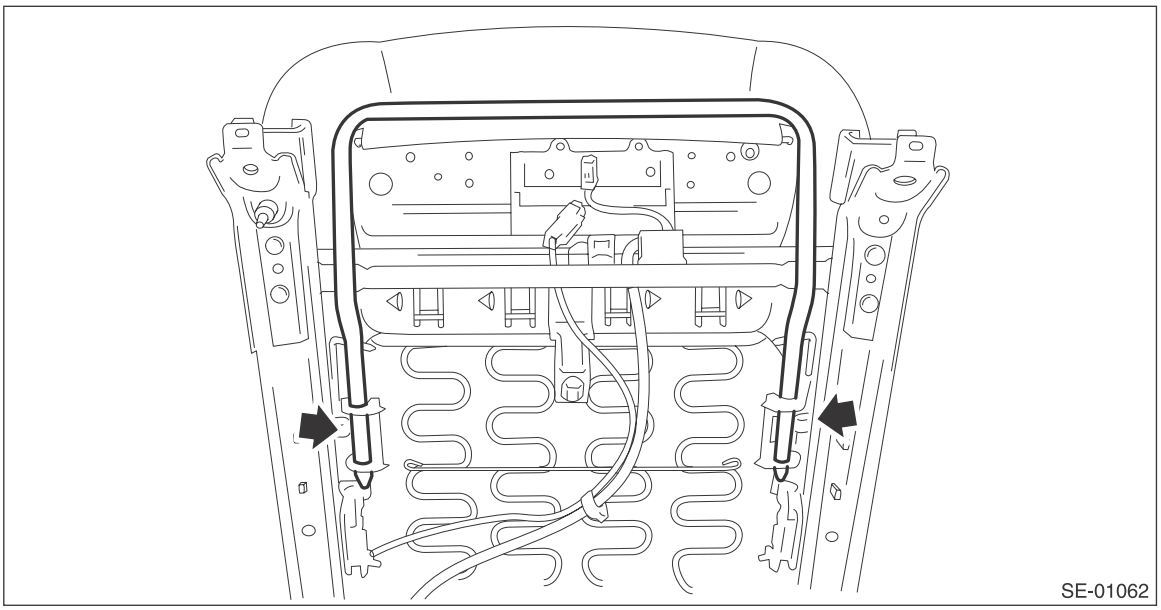

9) Remove the riser cover OUT.
(1) Remove the clip.
(2) Remove the hook, and detach the riser cover OUT.

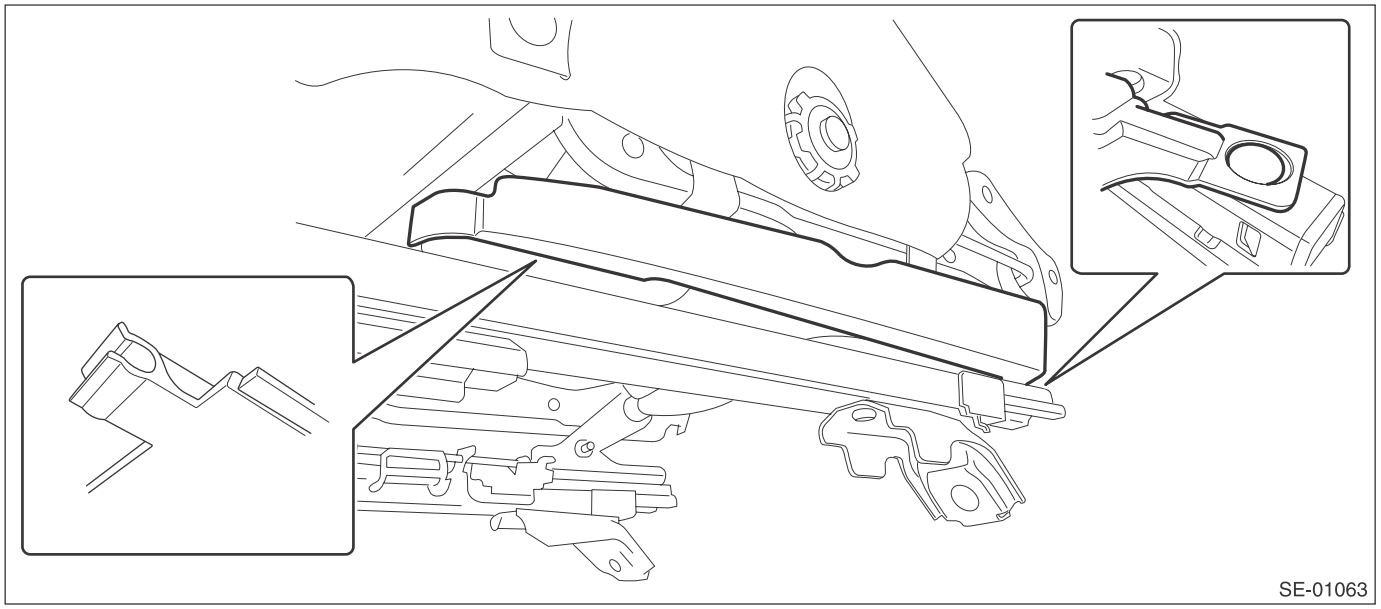

10) Remove the screws and remove the riser cover INN LH and RH.

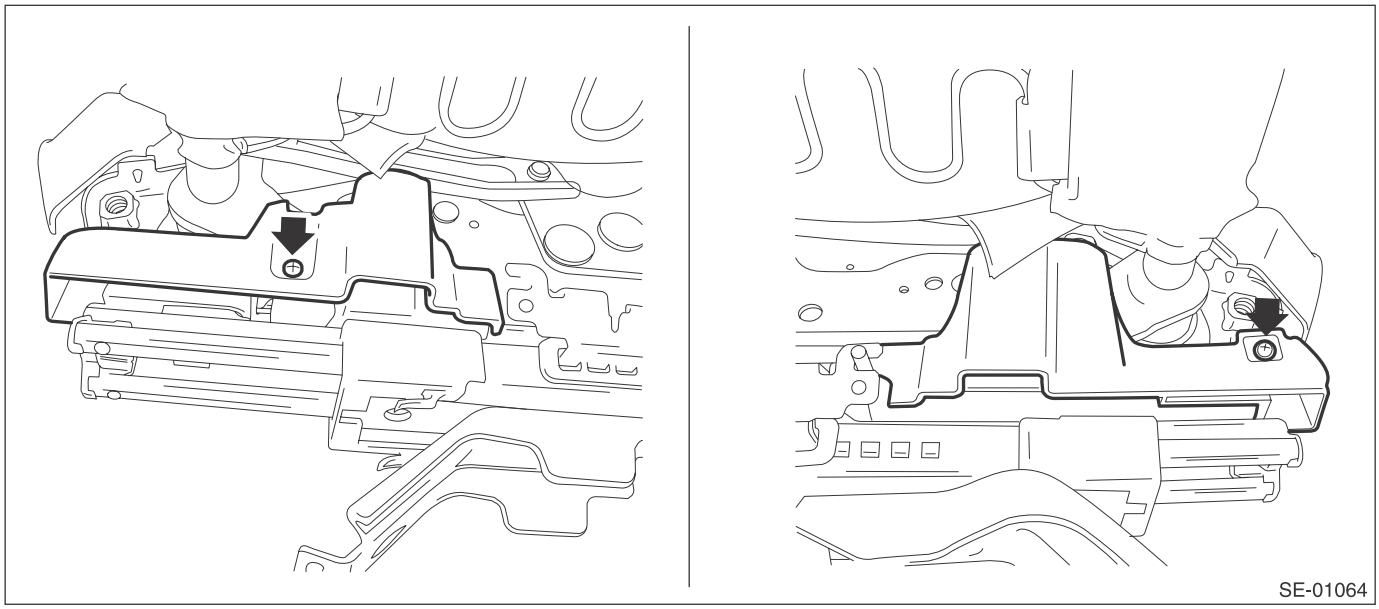

11) Remove the bolts and bushings on the seat cushion assembly (left and right) sides, and remove the slide rail assembly.

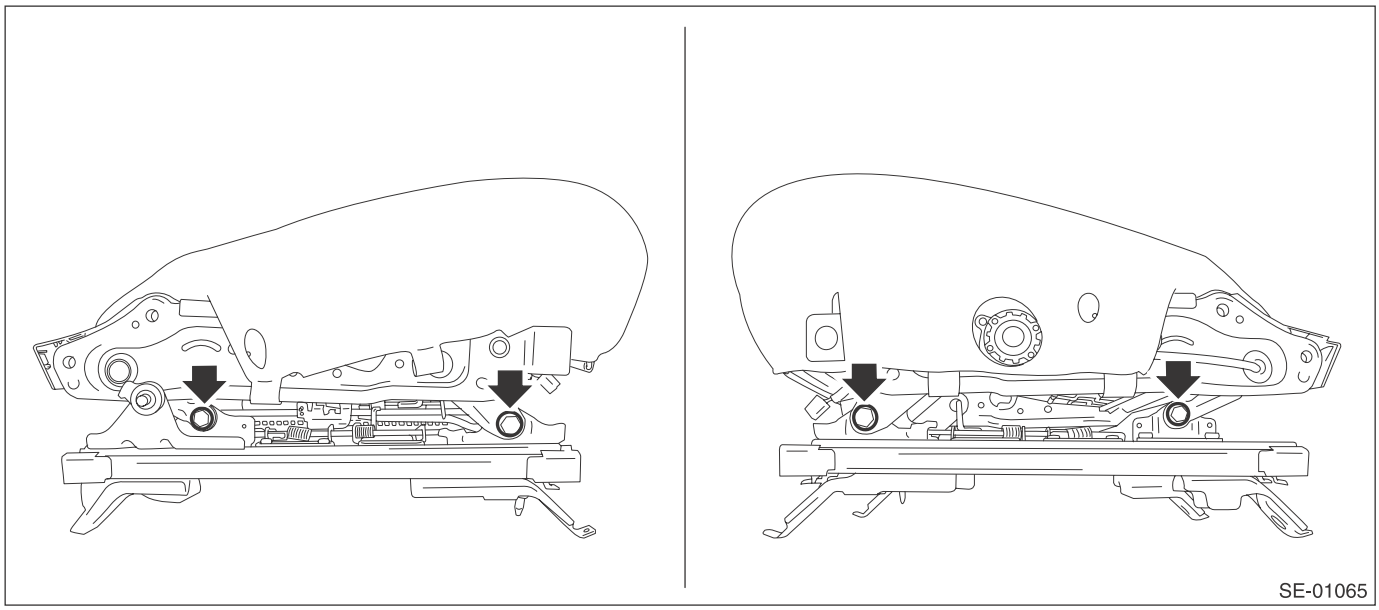

NOTE:
To remove the front bolt, use a spanner.

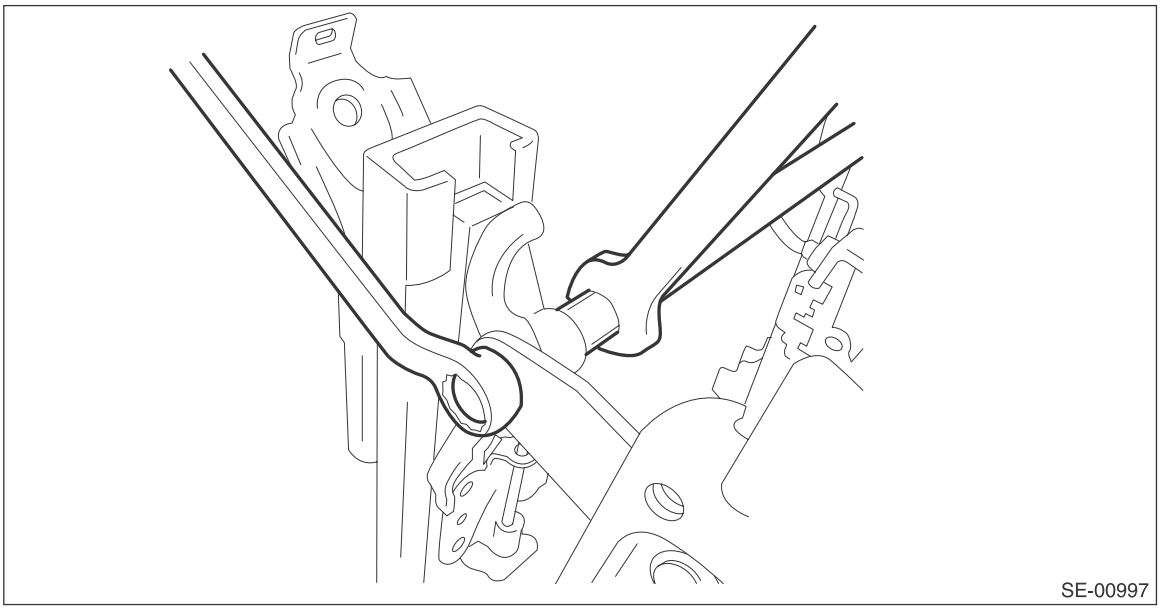
SE-00997

12) Remove the seat cushion pad & cover.
(1) Remove the hooks and hog rings.
(2) Remove the seat cushion pad & cover from seat cushion assembly.

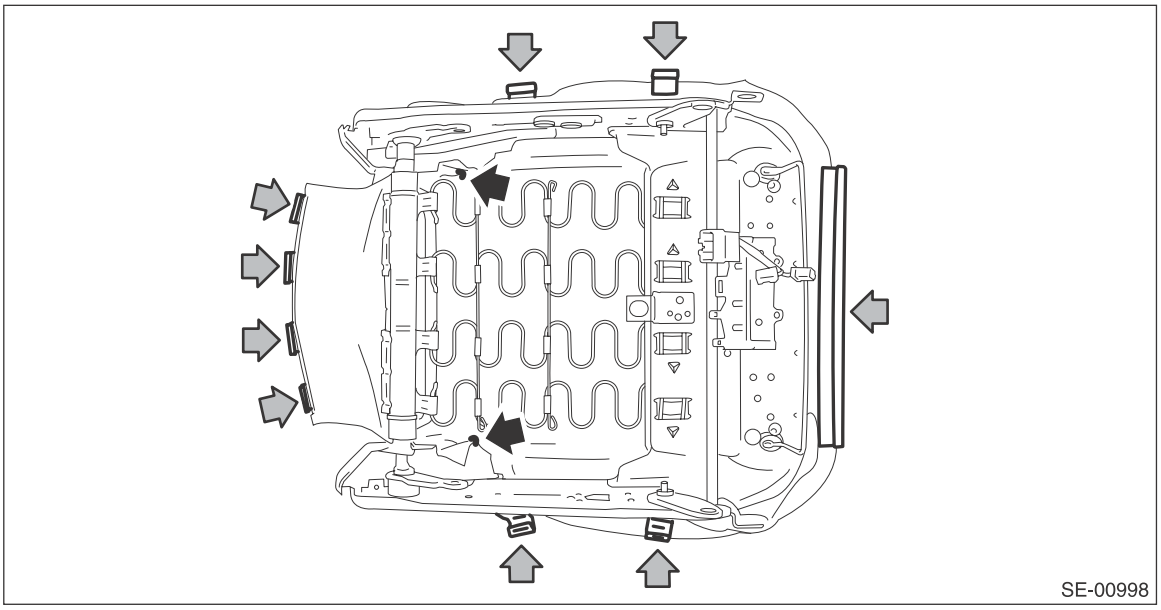
SE-00998

13) Remove the seat cushion cover.
(1) Remove the hog ring (A).

(2) Pull out the seat cushion pad from the seat cushion cover.

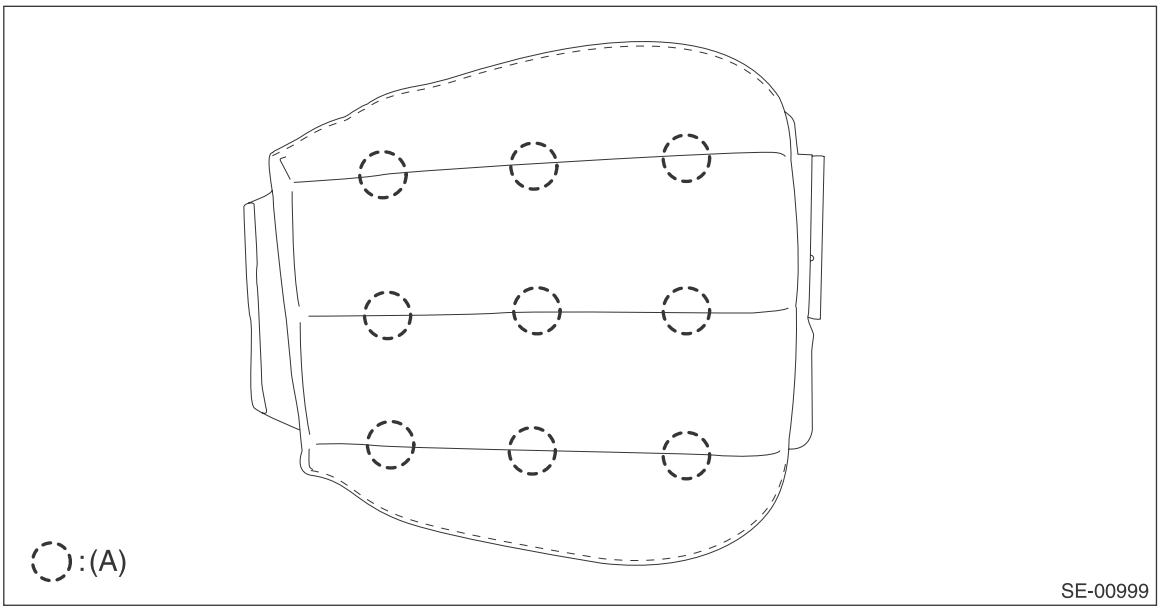

14) Remove the backrest back cover.
(1) Remove the screws.
(2) Release the hooks by pulling down the back cover and remove the backrest back cover.

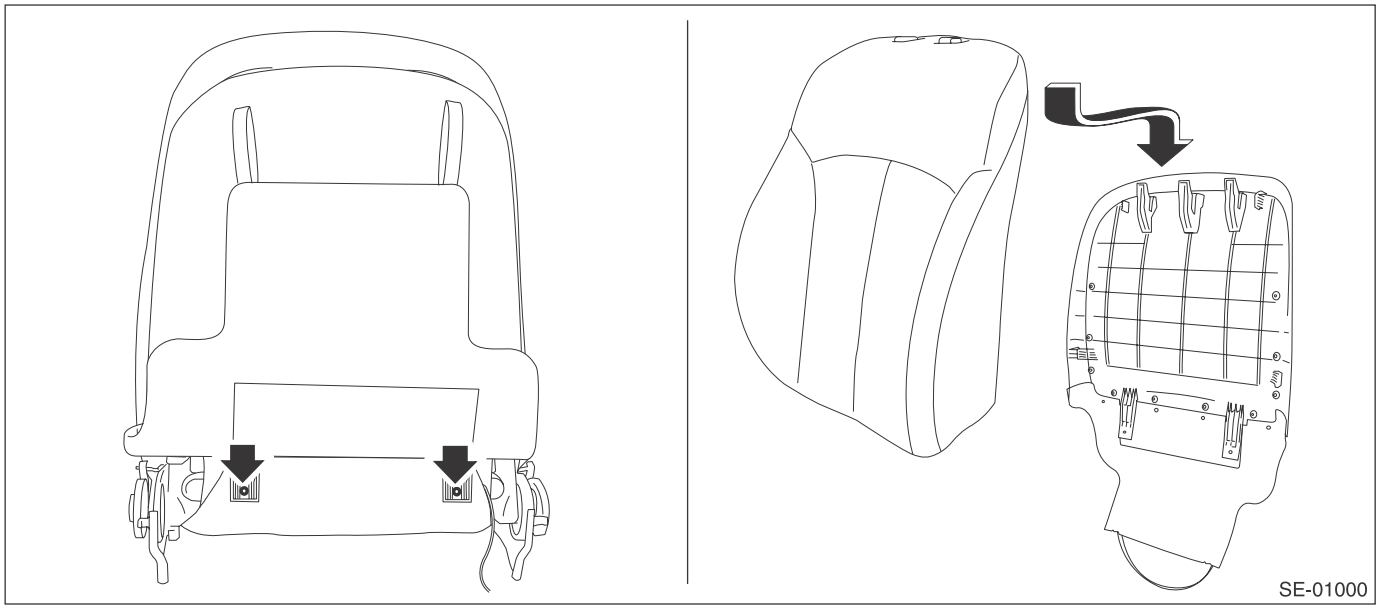

15) Remove the backrest pad & cover.
(1) Remove the hooks and hog rings.

(2) Remove the backrest pad & cover from backrest assembly.

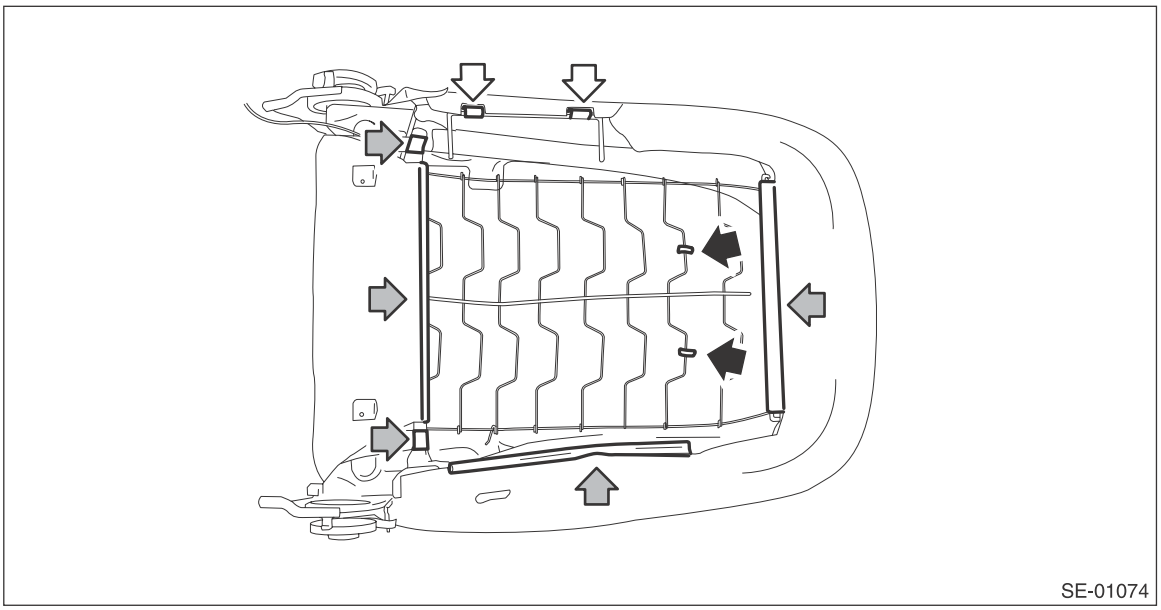

16) Remove the side airbag module assembly.

CAUTION:
Do not open the (plastic) protective cover of the airbag. If any damage is present in the protective cover (such as airbag module cloth coming out), replace the side airbag module assembly with a new one.

(1) Remove the S hook.
(2) Remove the mounting nuts of the side airbag module.

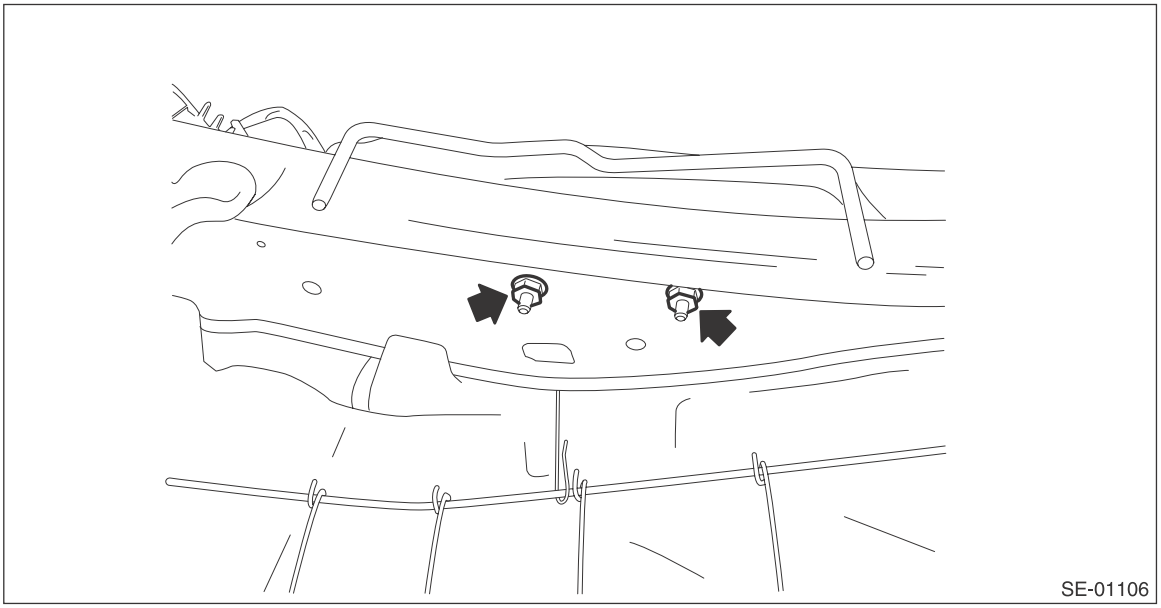

(3) Remove the side airbag harness from backrest frame assembly.
(4) While taking care not to damage the airbag (plastic) protective cover, remove the side airbag module assembly.

17) Remove the headrest bushing.

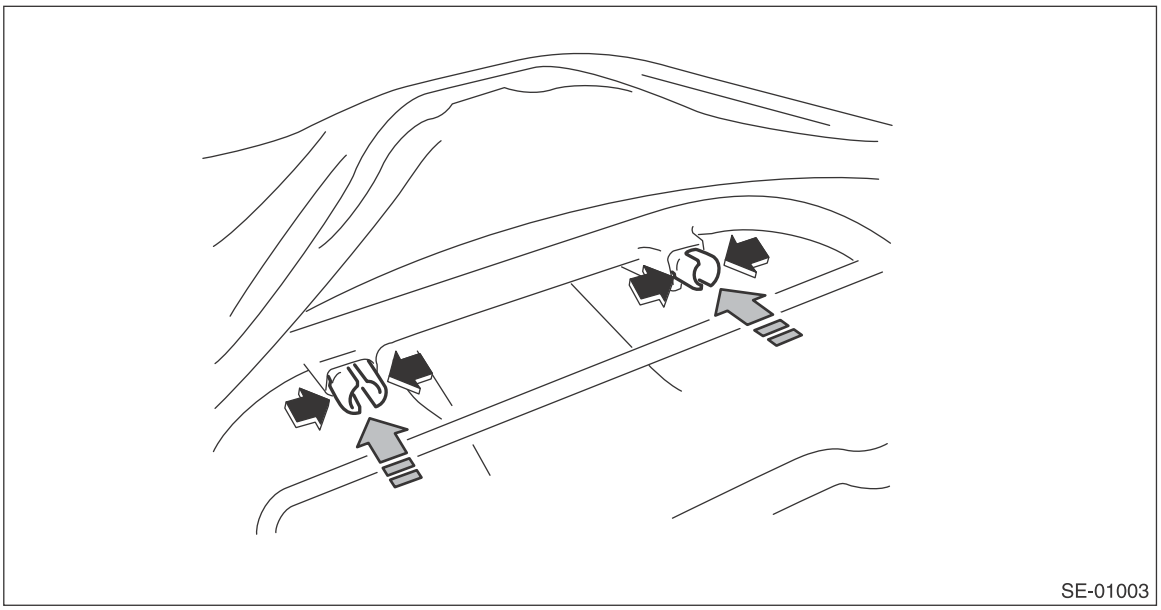

NOTE:
Catch the tip of headrest bushing with pliers and push it from inside seat to outside to remove it.

18) Pull out the backrest frame.

19) Remove the backrest cover.
(1) Remove the hog ring (A).
(2) Pull out the backrest pad from the backrest cover.

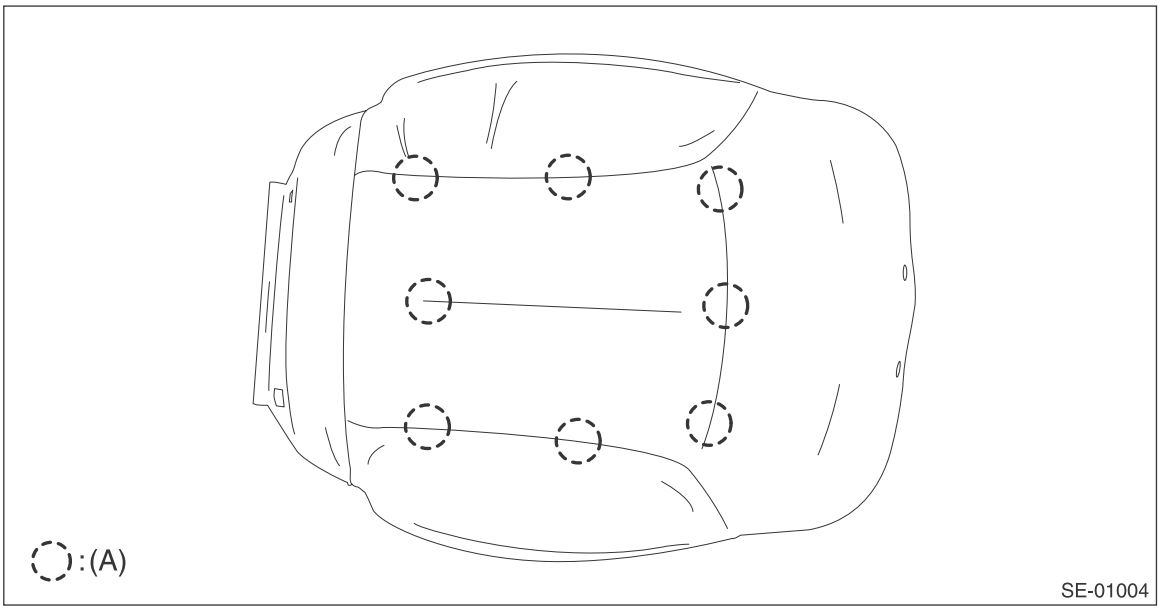

2. DRIVER SEAT (POWER SEAT)

CAUTION:
• Make sure how the harnesses of the side airbag and inner seat belt are routed before assembling to avoid misarranging. Incorrect harness routing during assembly can result in pinched harnesses or short circuits.
• Do not disassemble the backrest assembly, and seat cushion frame and slide rail assembly.

1) Remove the seat from vehicle. <Ref. to SE-10, REMOVAL, Front Seat.>

NOTE:
Before removing the seat, lift the seating face.

2) Disconnect the connector for reclining motor from the backside of seat cushion.

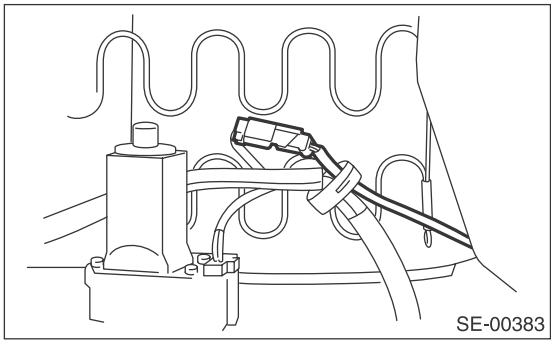

3) Remove the seat side cover OUT.
(1) Release the claw in the rear section of the seat side cover.
(2) Release the claw in the upper section of the seat side cover.
(3) Remove the clip and release the claw in the front section of the seat side cover
(4) Disconnect the power seat switch and lumber switch connectors and remove the seat side cover OUT.

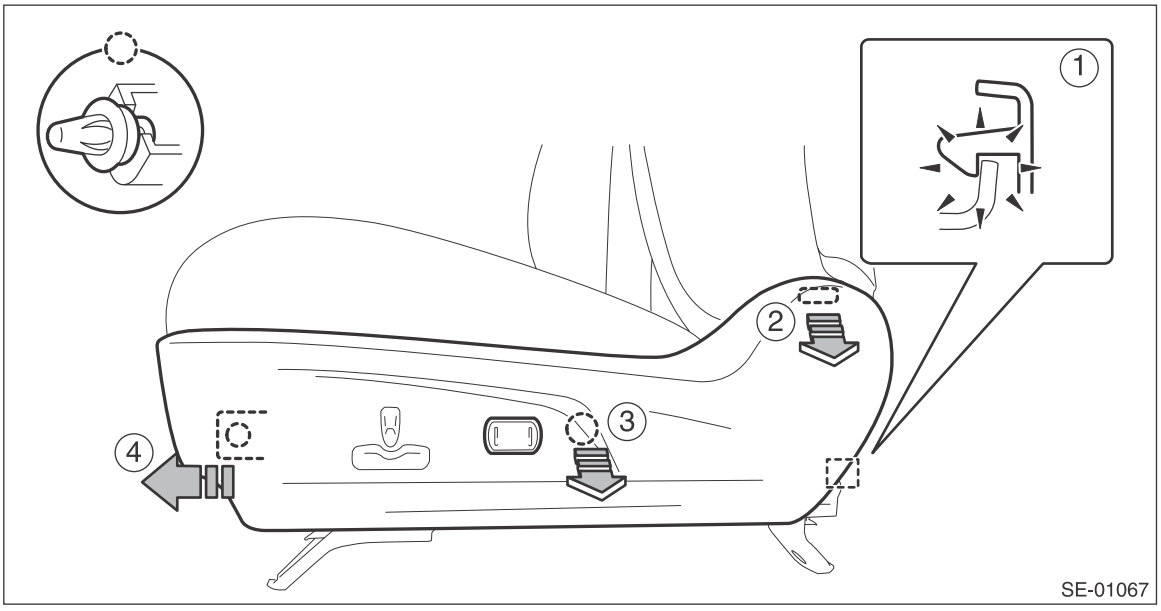

4) Remove the inner seat belt assembly.
(1) Remove the nut and remove the inner seat belt assembly.

(2) Disconnect the connector of the inner seat belt harness located under the seat cushion.

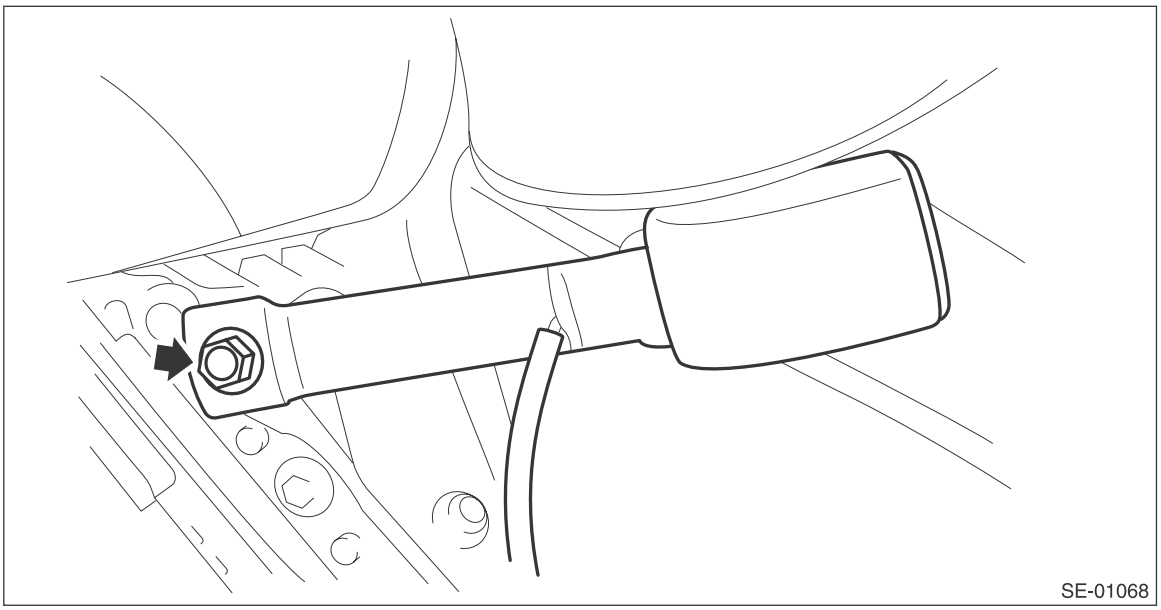

5) Remove the seat side cover IN.
(1) Remove the screws.
(2) Release the claw in the rear section of the seat side cover.
(3) Release the claw in the upper section of the seat side cover, then remove the seat side cover IN.

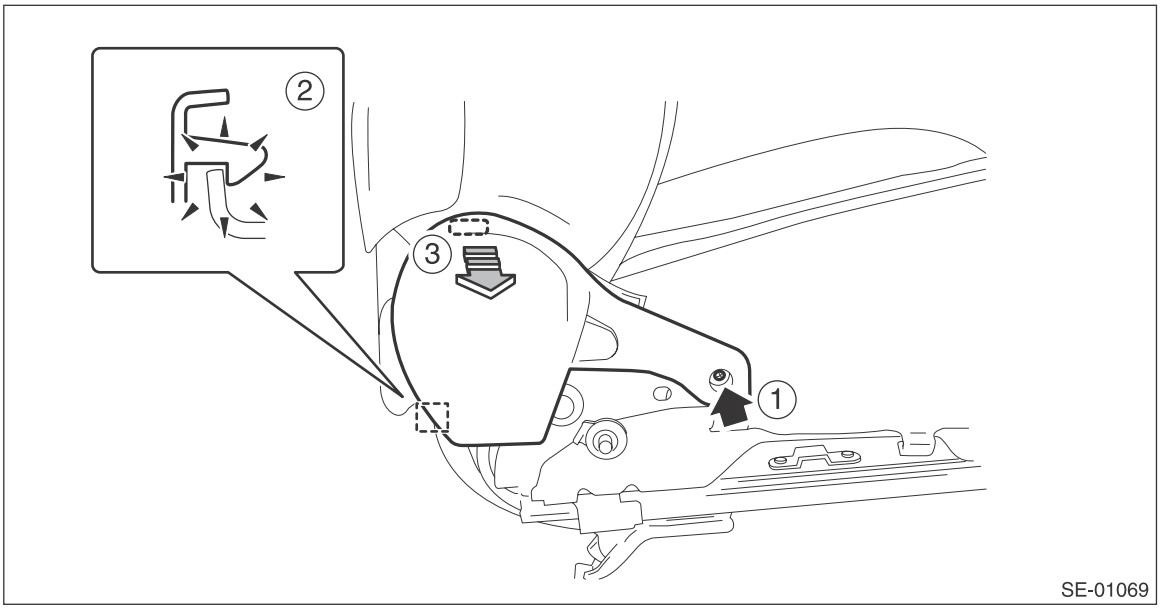

6) Separate the backrest assembly and the seat cushion assembly.
(1) Remove the clip for the side airbag harness located under the seat cushion. (seat with side airbag)
(2) Remove the bolts from the right and left reclining hinges.

(3) While taking care not to damage the airbag harness, separate the backrest assembly and the seat cushion assembly.

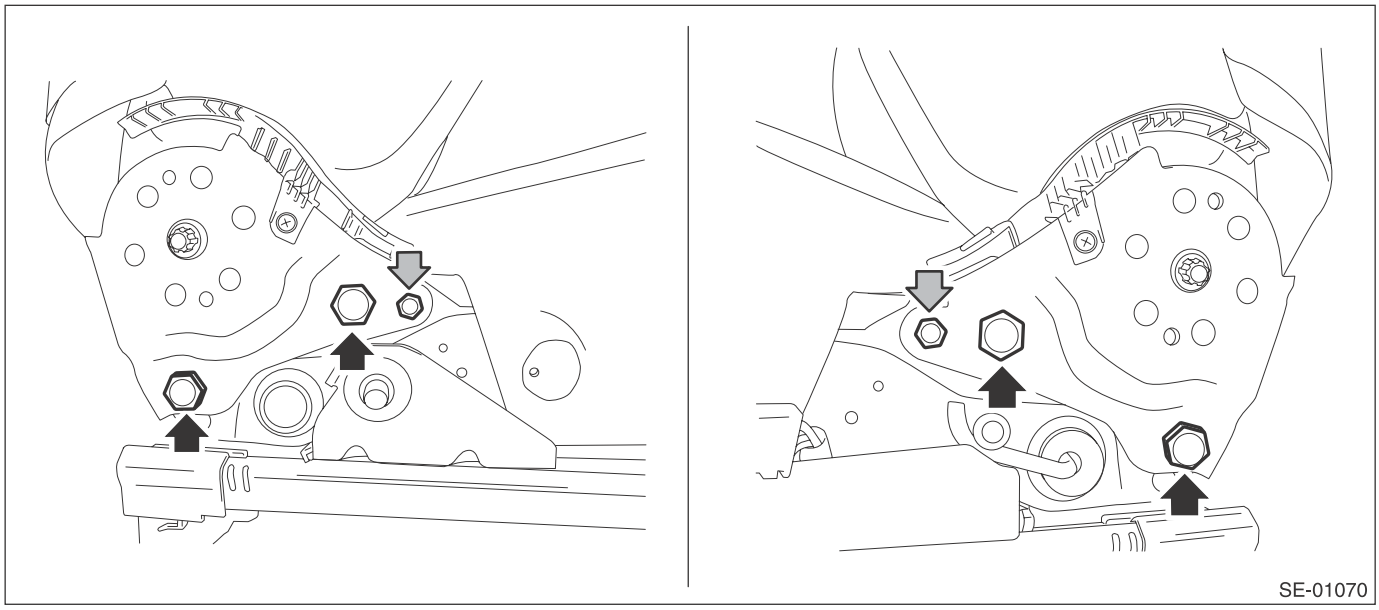

7) Remove the riser covers LH and RH as well as slide rail end cover.
(1) Remove the clips and remove the riser covers LH and RH.
(2) Remove the hook, and then remove the slide rail end cover.

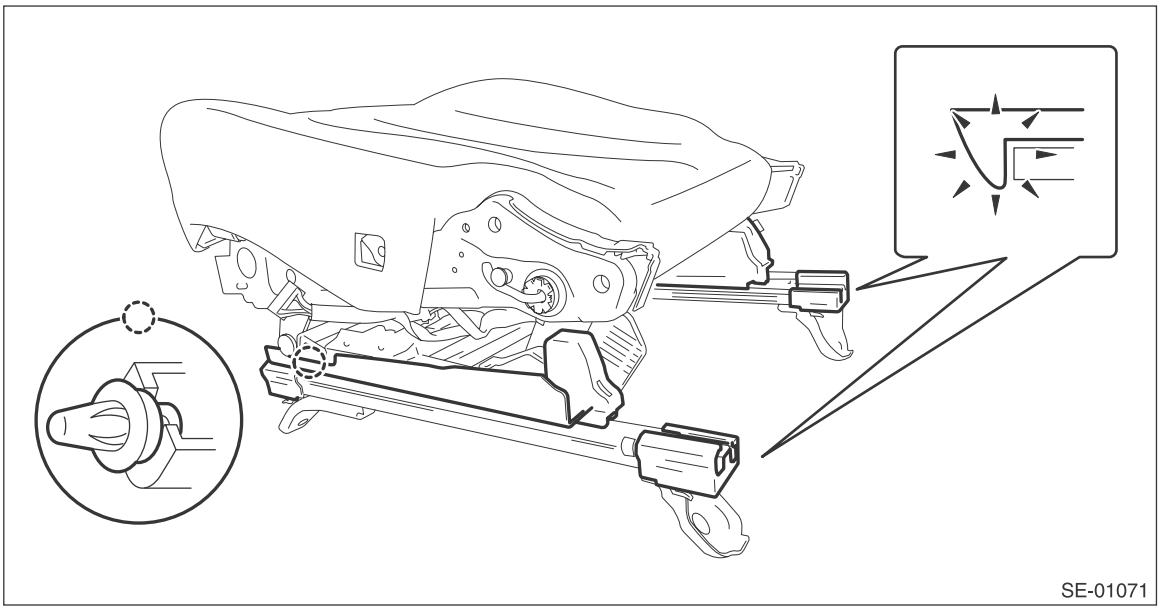

8) Remove the seat cushion pad & cover.
(1) Remove the hooks and hog rings.

(2) Remove the seat cushion pad & cover from seat cushion assembly.

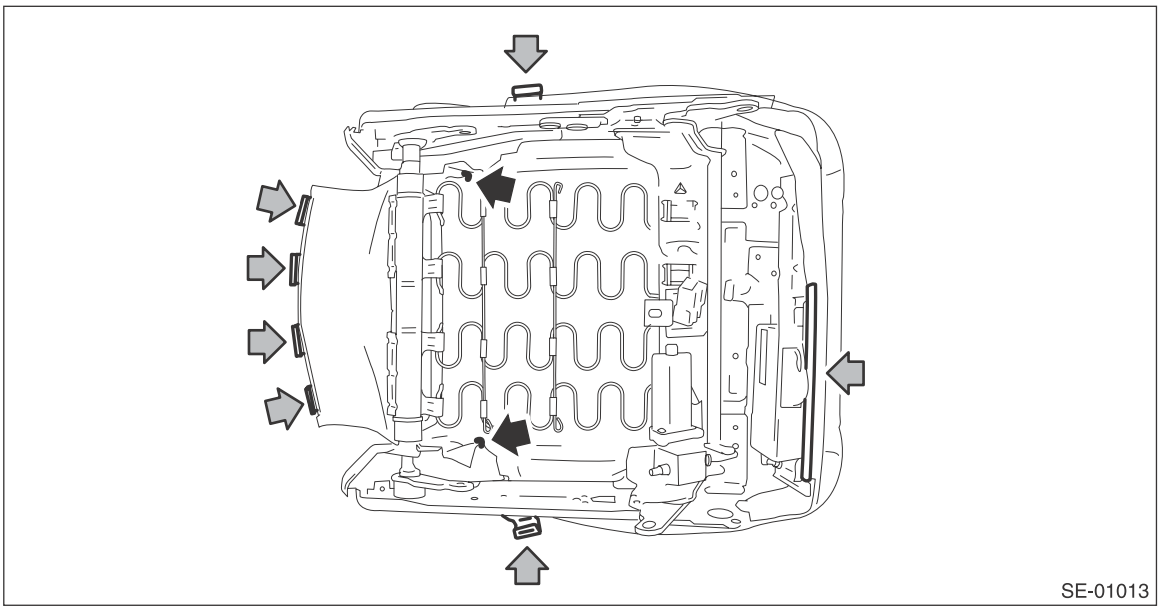

9) Remove the seat cushion cover.
(1) Remove the hog ring (A).
(2) Pull out the seat cushion pad from the seat cushion cover.

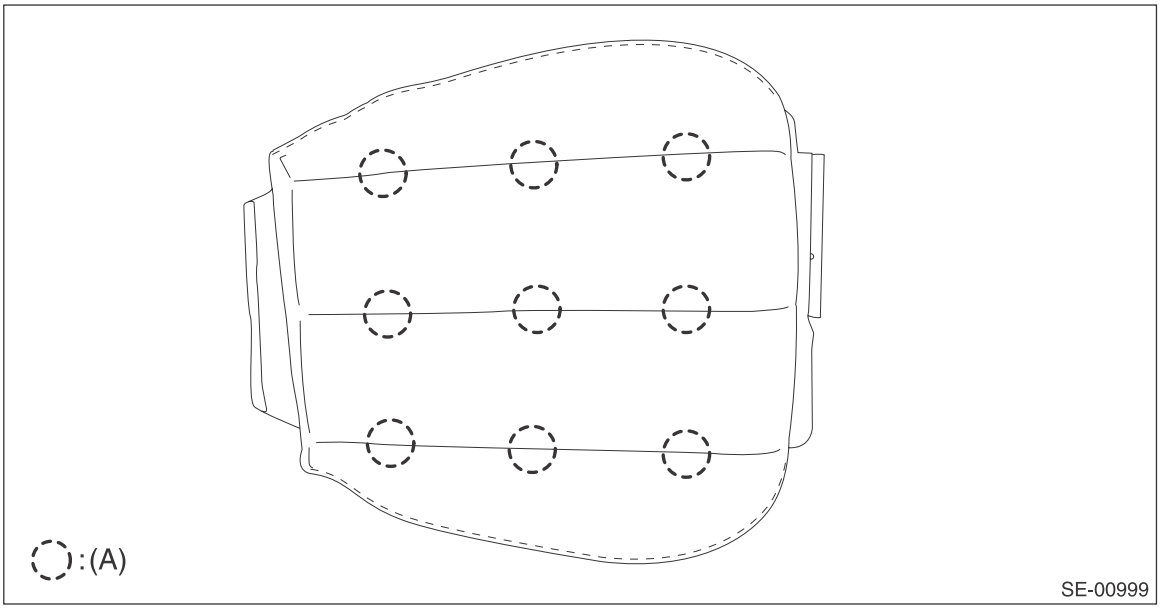

10) Remove the backrest back cover.
(1) Remove the screws.

(2) Release the hooks by pulling down the back cover and remove the backrest back cover.

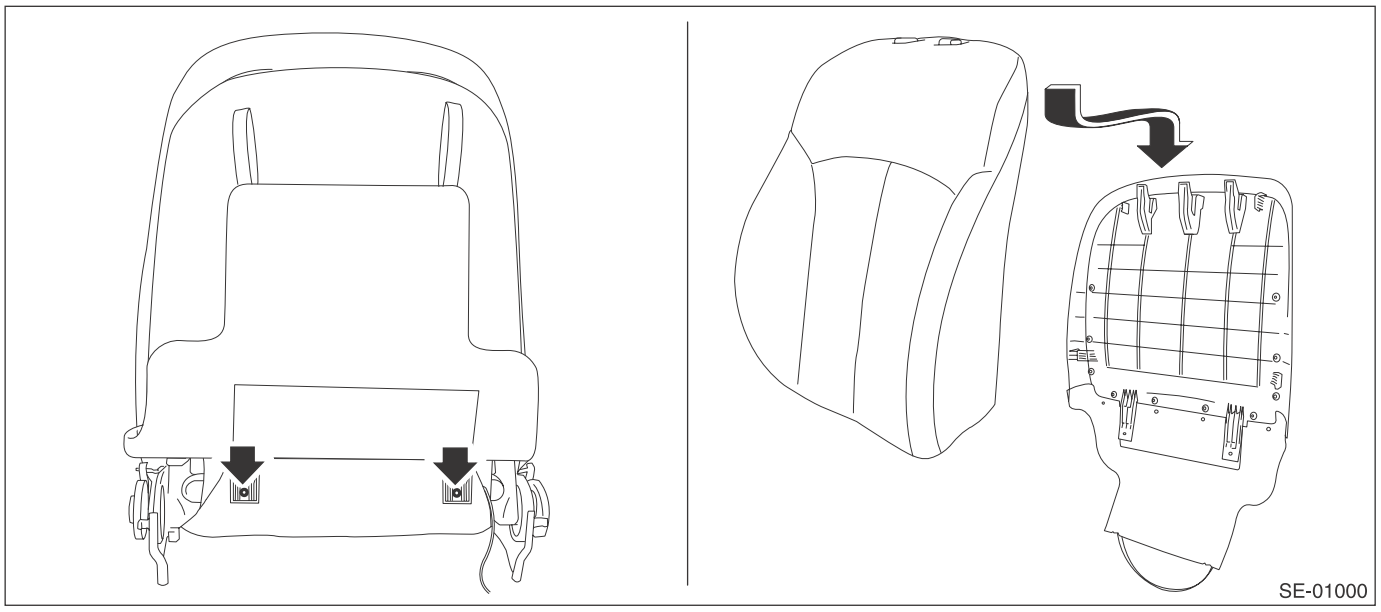

11) Remove the backrest pad & cover.
(1) Remove the hooks, hog rings, and metal clips.
(2) Remove the backrest pad & cover from backrest assembly.

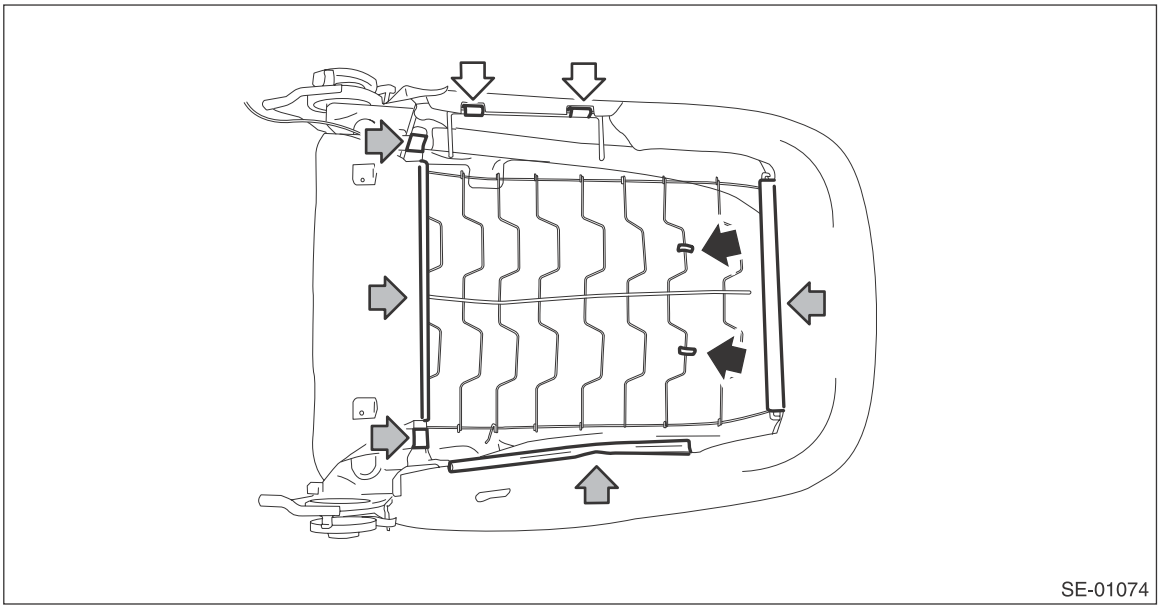

12) Remove the side airbag module assembly.

CAUTION:
Do not open the (plastic) protective cover of the airbag. If any damage is present in the protective cover (such as airbag module cloth coming out), replace the side airbag module assembly with a new one.

(1) Remove the S hook.

(2) Remove the mounting nuts of the side airbag module.

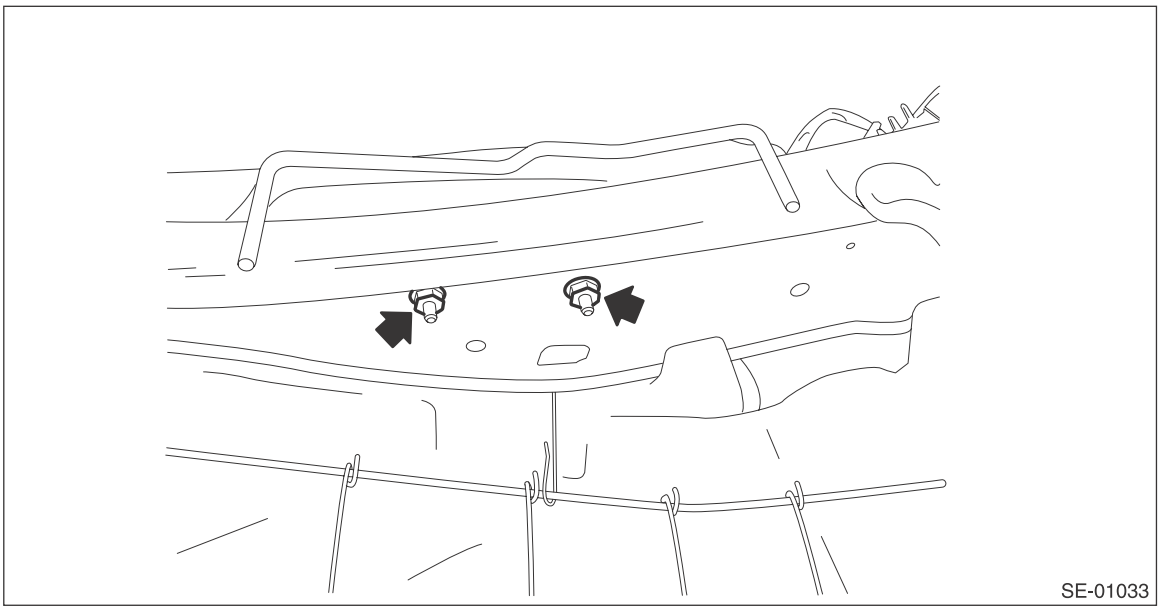

(3) Remove the side airbag harness from backrest frame assembly.
(4) While taking care not to damage the airbag (plastic) protective cover, remove the side airbag module assembly.

13) Remove the headrest bushing.

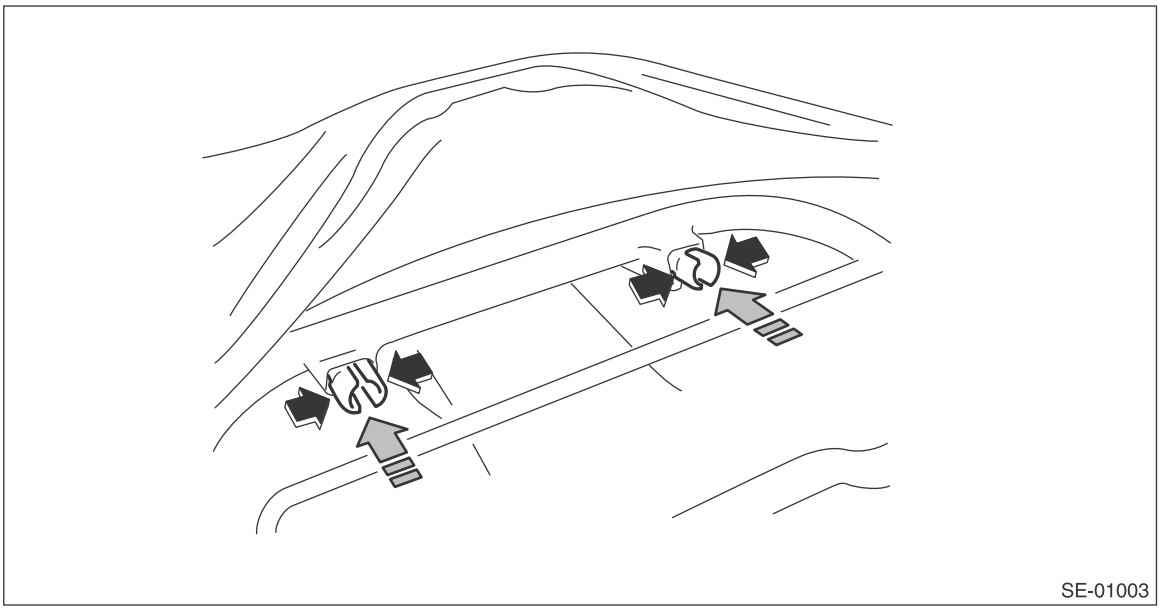

NOTE:
Catch the tip of headrest bushing with pliers and push it from inside seat to outside to remove it.

14) Pull out the backrest frame.
15) Remove the backrest cover.
(1) Remove the hog ring (A).

(2) Pull out the backrest pad from the backrest cover.

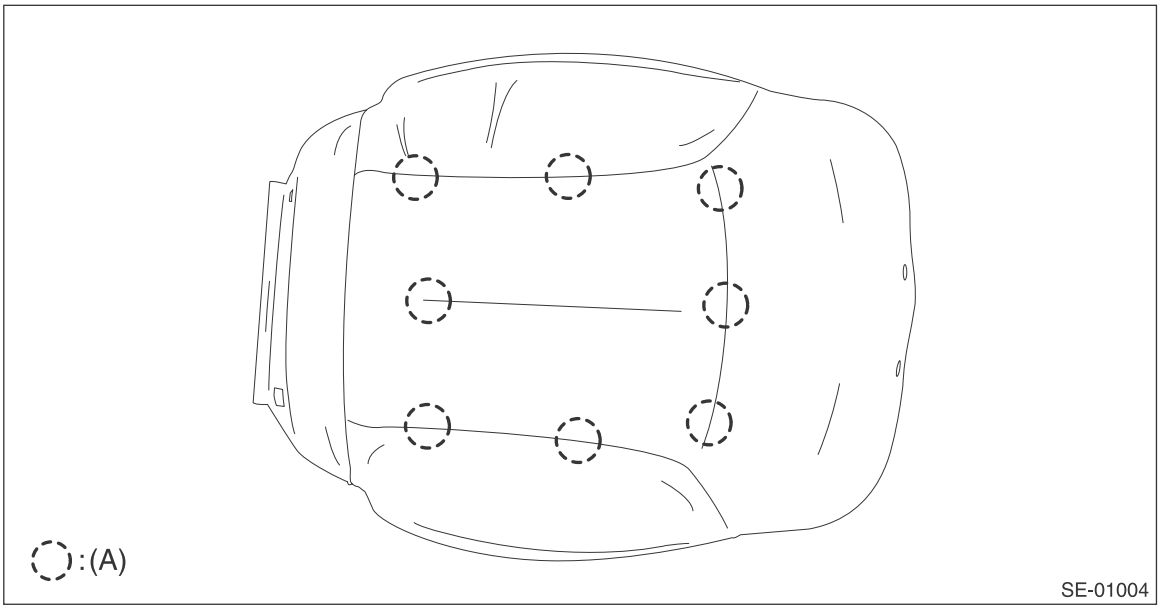

3. PASSENGER'S SEAT

CAUTION:

• When removing or replacing the seat cushion cover, be sure to perform the system calibration for the occupant detection system after installing the seat. <Ref. to OD(diag)-15, OPERATION, System Calibration (Rezeroing).>

If system adjustment is not performed, the passenger's airbag may not function properly.

• Only for passenger's seat, the occupant detection control module, occupant detection sensor, seat cushion pad and seat cushion frame are integrated in the seat cushion pad & frame assembly. Do not remove the occupant detection control module and occupant detection sensor from the seat cushion frame.

• When removing the seat cushion cover, be sure to replace the sling wire of seat cushion cover side with new one.

• When installing the seat cushion cover, be careful to install the hog ring on the back side of seat cushion pad so that it does not interfere with the occupant detection sensor. If the hog ring interferes with the occupant detection sensor, the occupant detection system may not operate properly.

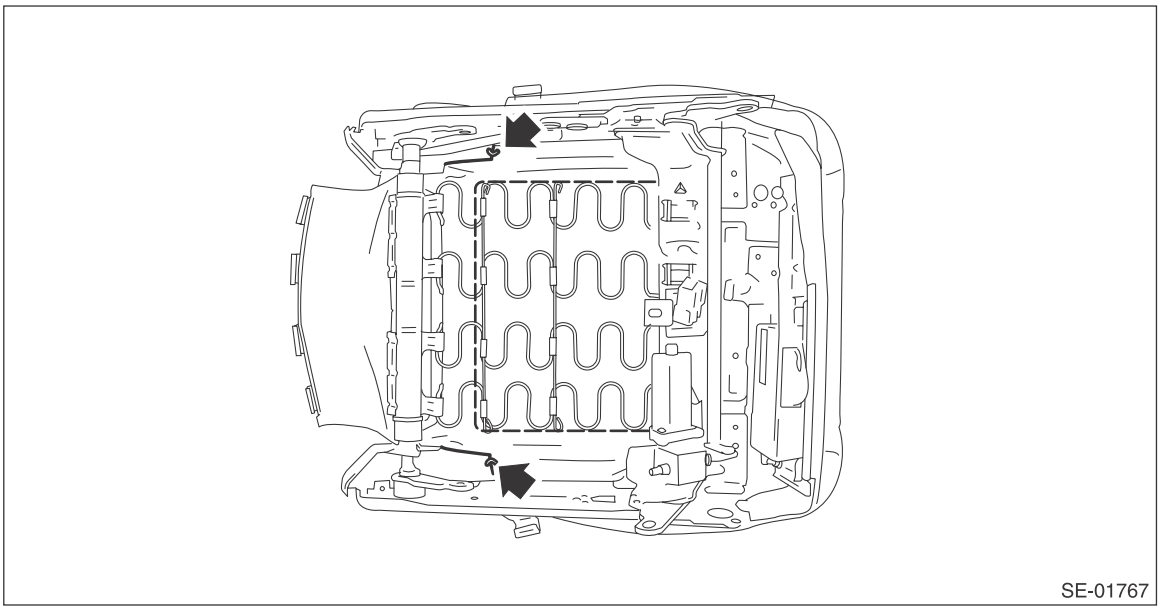

1) Remove the seat from vehicle. <Ref. to SE-10, REMOVAL, Front Seat.>

NOTE:
For power seat, lift the seating face before removing the seat.
2) Refer to the disassembly procedure of the driver's seat.
- MANUAL SEAT <Ref. to SE-12, DRIVER SEAT (MANUAL SEAT), DISASSEMBLY, Front Seat.>
- POWER SEAT <Ref. to SE-21, DRIVER SEAT (POWER SEAT), DISASSEMBLY, Front Seat.>

CAUTION:
The occupant detection control module, occupant detection sensor, seat cushion pad and seat cushion frame are integrated in the seat cushion pad & frame assembly. Do not remove the occupant detection control module and occupant detection sensor from the seat cushion frame.

D: ASSEMBLY

CAUTION:
- **Make sure that the wire harnesses such as side airbag harness and inner seat belt harness are laid out correctly. Incorrect harness routing during assembly can result in pinched harnesses or short circuits.**
- **If the flat mat hood of backrest frame assembly is deformed or detached, replace it with a new hook.**

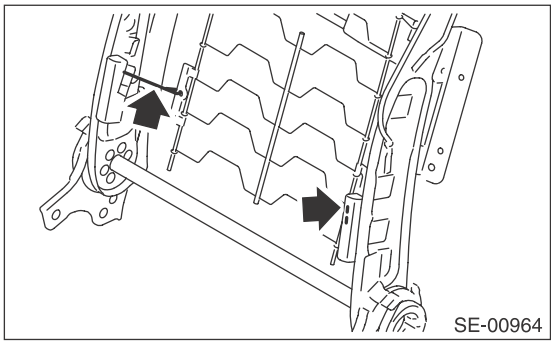

- **Make sure that the side airbag module assembly is installed as shown in the figure.**

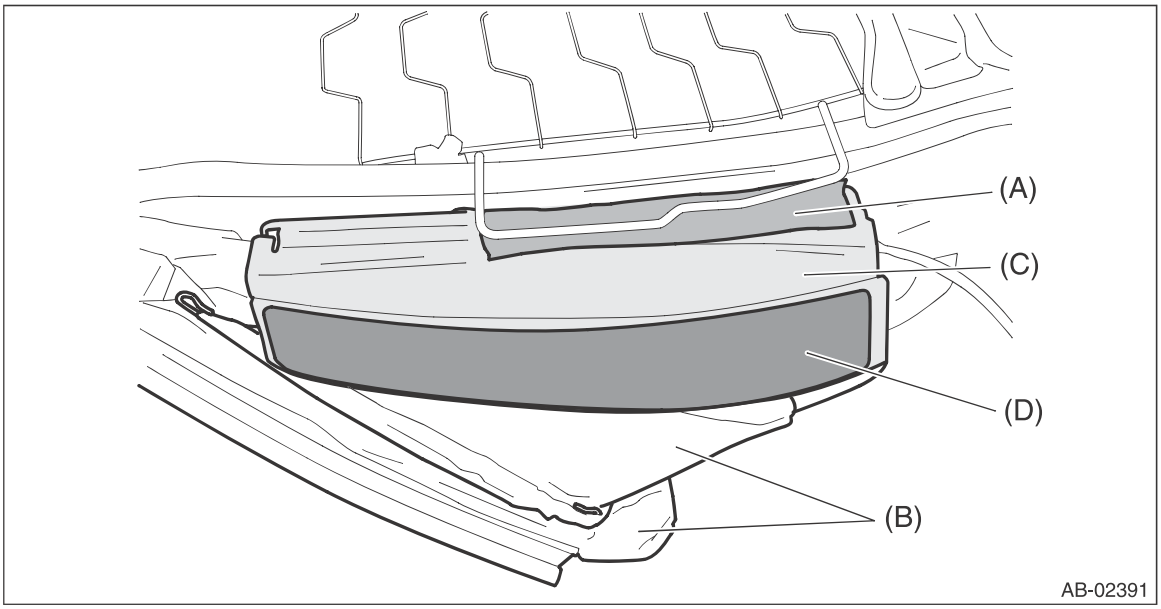

(A) Side airbag guide cloth (B) Backrest cover (C) Side airbag module ASSY
(D) Side airbag tape

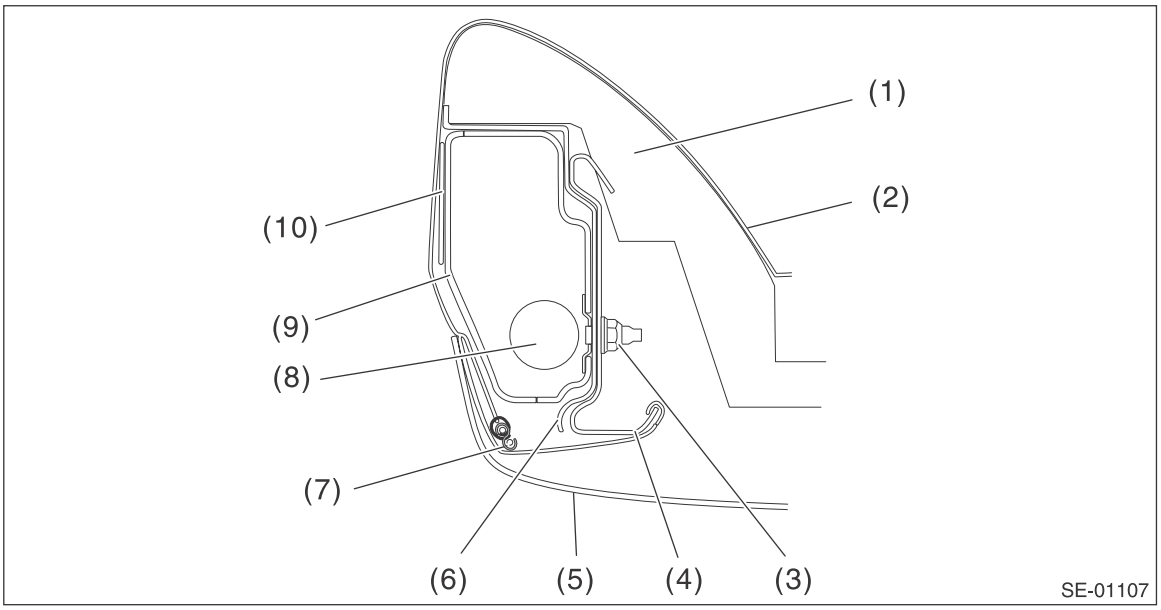

(1) Backrest pad
(2) Backrest cover
(3) Nut
(4) Backrest frame
(5) Backrest back cover
(6) Side airbag guide cloth
(7) S hook
(8) Side airbag module inflator
(9) Side airbag module case
(10) Side airbag tape

When the backrest cover is not installed securely, the side airbag module may not be deployed properly, therefore keep strictly to the following procedure.
- **When replacing the side airbag assembly with new one, be sure to attach the side airbag tape.**
- **Be careful not to stain or damage the backrest cover during assembly.**
- **Do not reuse hog rings and S hooks.**
- **Secure the hog ring using hog ring pliers.**
- **Install the hog rings to the specified points securely and make sure that no wrinkle or twisting on backrest cover.**

1) Make sure that there is no foreign matter on side airbag module.
2) Assemble remaining parts in the reverse order of removal.

NOTE:
Temporarily tighten the reclining hinge bolts in the order from (1) to (4) so that the seat back assembly is not fixed securely.

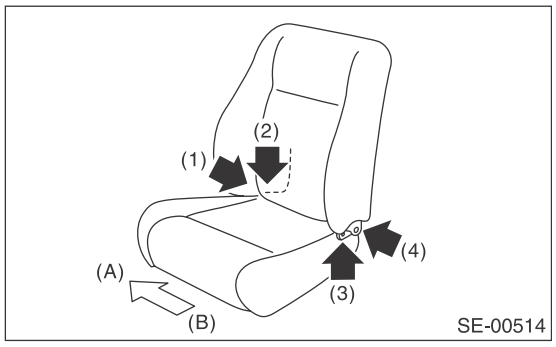

(A) Vehicle inside
(B) Vehicle outside

Tightening torque:<Ref. to SE-2, FRONT SEAT, COMPONENT, General Description.>

3) Install the seat assembly.

CAUTION:
• The seat mounting bolts differ between the front mounting points and the rear mounting points. Make sure that you are using correct bolts at correct positions.
• Tighten the slide rail installing bolt gradually in several steps to the specified torque in the order as shown in the figure.

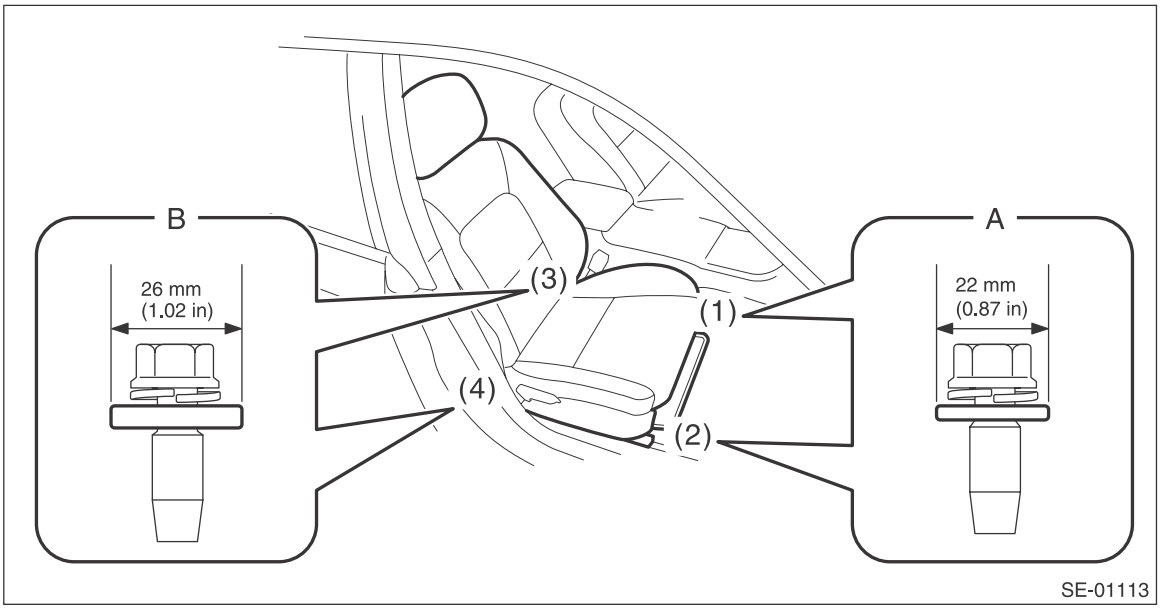

- **Front (bolt A): Washer diameter 22 mm (0.87 in)**
- **Rear (bolt B): Washer diameter 26 mm (1.02 in)**

Tightening torque: 53 N·m (5.4 kgf-m, 39.1 ft-lb)

E: INSPECTION

1. SEAT COVER

Check that no tear or fray on the backrest cover and seat cushion cover.

NOTE:
For model with side airbag, if the door side of the backrest cover is torn or frayed, the side airbag may not be deployed properly. In this case, replace the backrest cover.

2. FLAT MAT HOOK

Apply load to the backrest and check the flat mat hook.

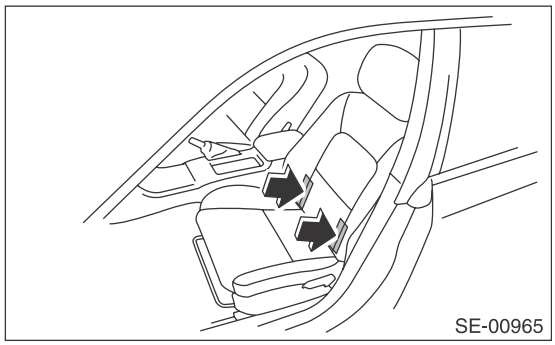

NOTE:
If the backrest does not keep sufficient tension when subject to load, some hooks may be detached.
If any hook is deformed and detached, replace it with a new hook.

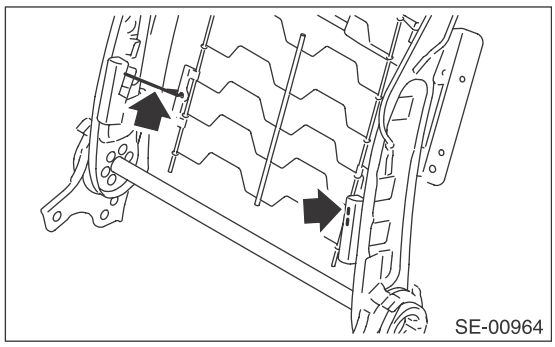

3. Rear Seat

A: REMOVAL

1. SEDAN MODEL

1) Remove the rear seat cushion.
   (1) Pull up the seat cushion and release the hook.

CAUTION:
If the hook is removed from vehicle body, replace the hook with the new part to avoid the deterioration of seat securing.

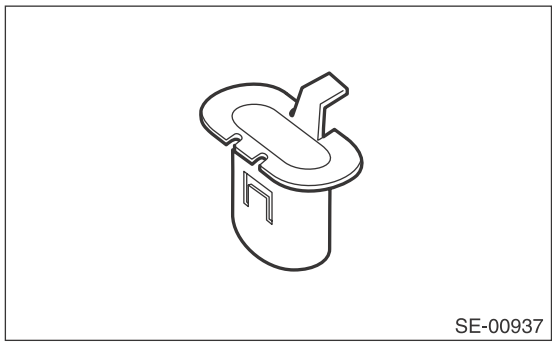
SE-00937

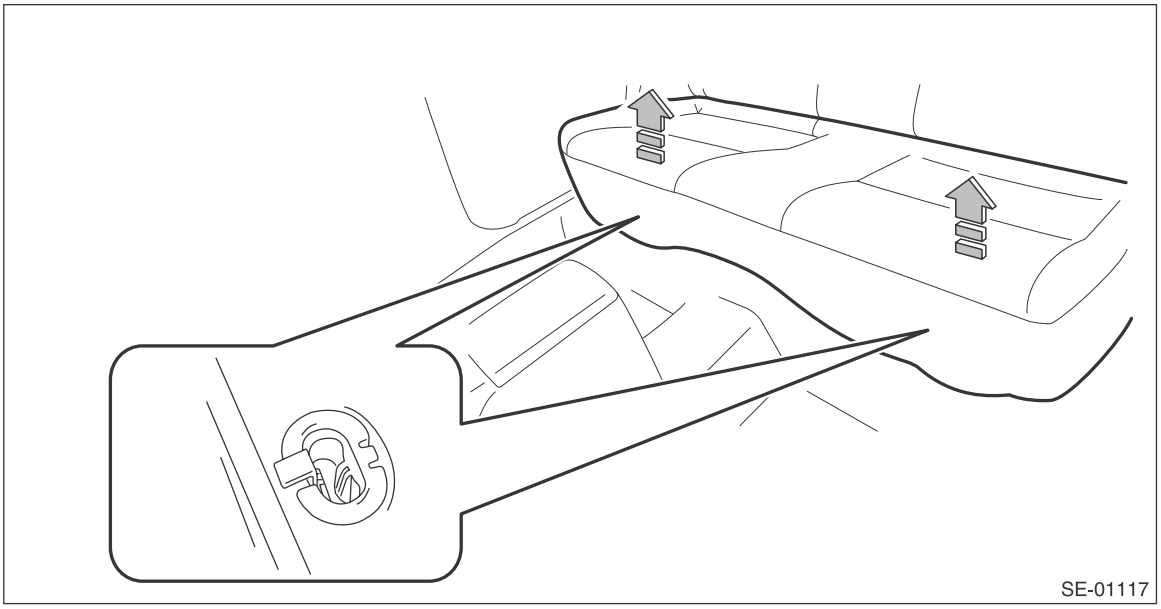
SE-01117

(2) Remove the hook (A) by pushing it back while lifting the front side of the seat cushion, and remove the seat cushion.

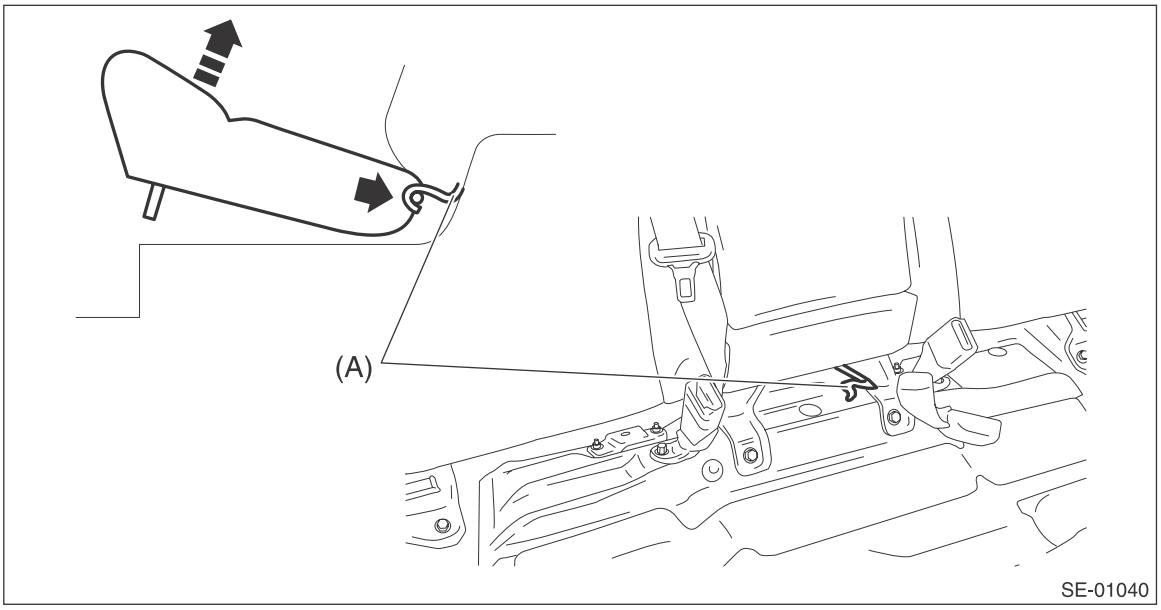

2) Remove the backrest assembly.
(1) Remove the bolts at the front of backrest hinge.

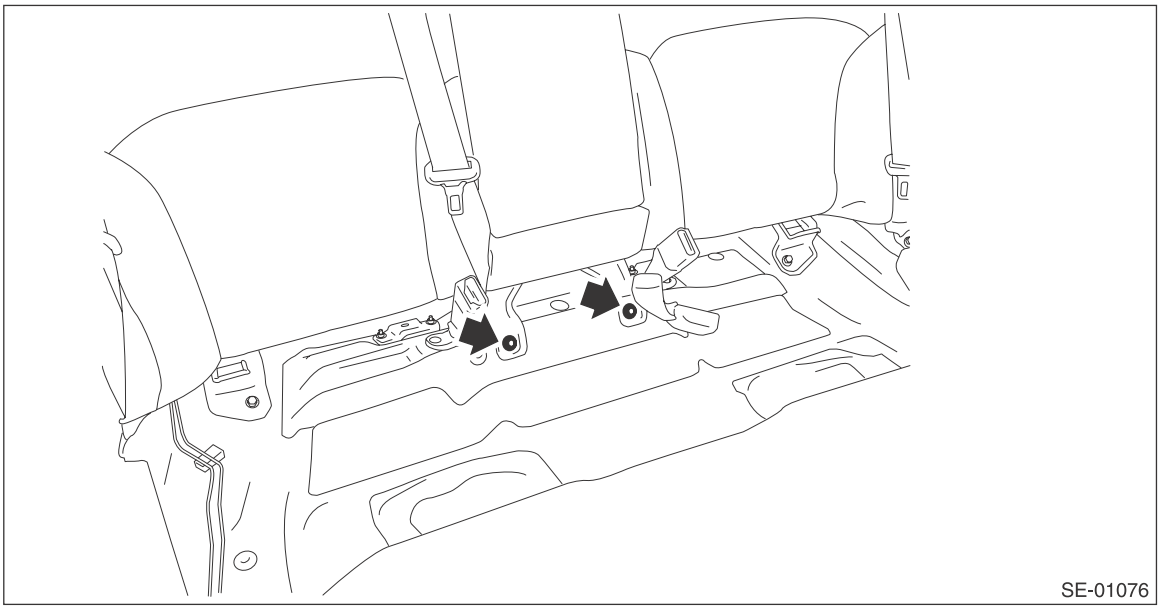

(2) Pull the release lever in the trunk room, and then tilt the backrest forward.

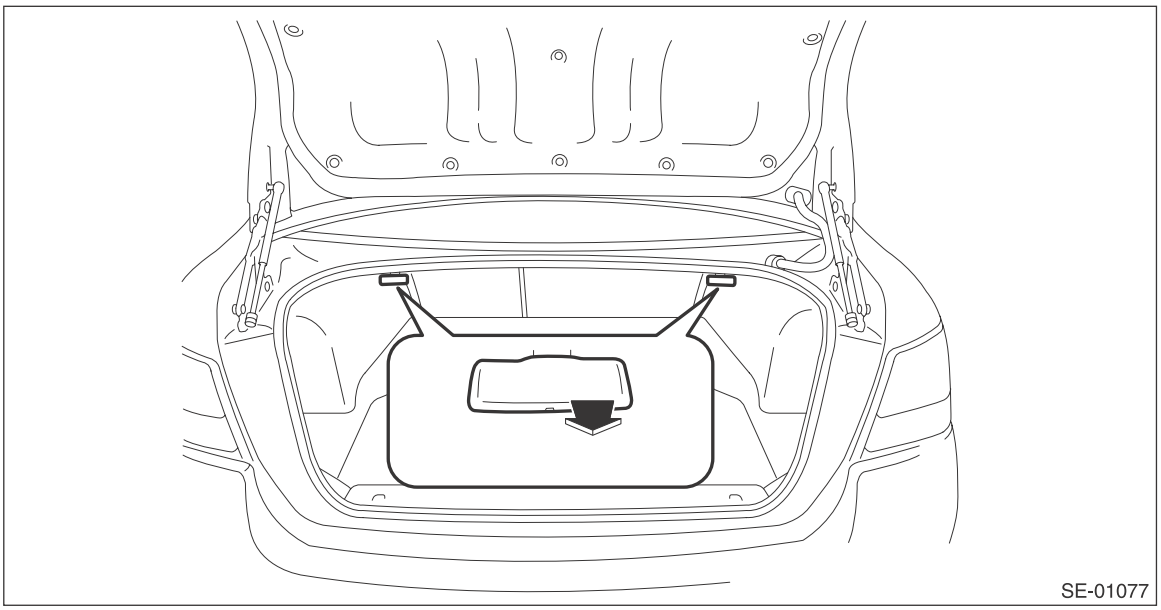

(3) Remove the nuts at the rear of backrest hinge.

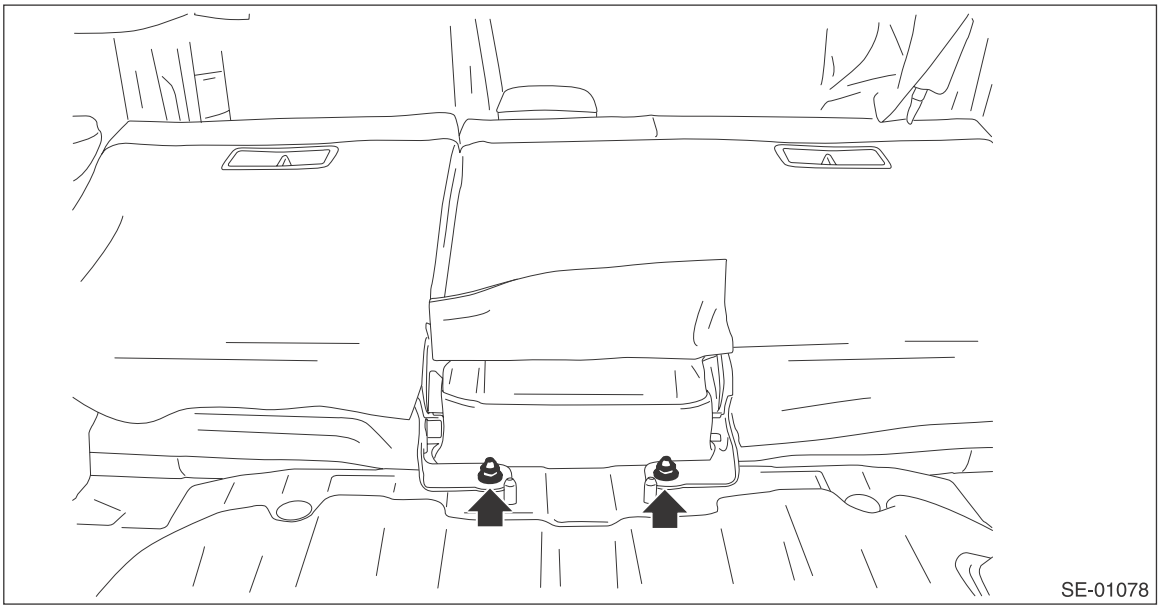

(4) Remove the backrest assembly RH from the hinge assembly RH.

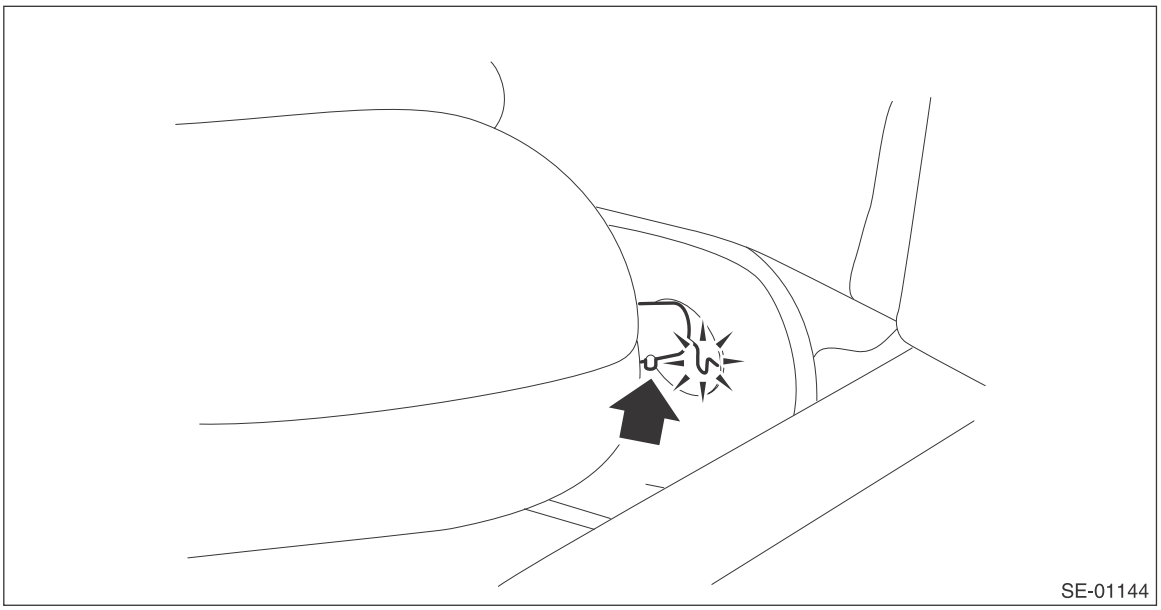

NOTE:
The backrest cannot be detached unless the backrest pin is aligned to the hinge assembly.

3) Referring to the above steps, remove the backrest assembly LH.

4) Remove the backrest side pad.

(1) Remove the bolts, and remove the backrest side pad assembly RH.

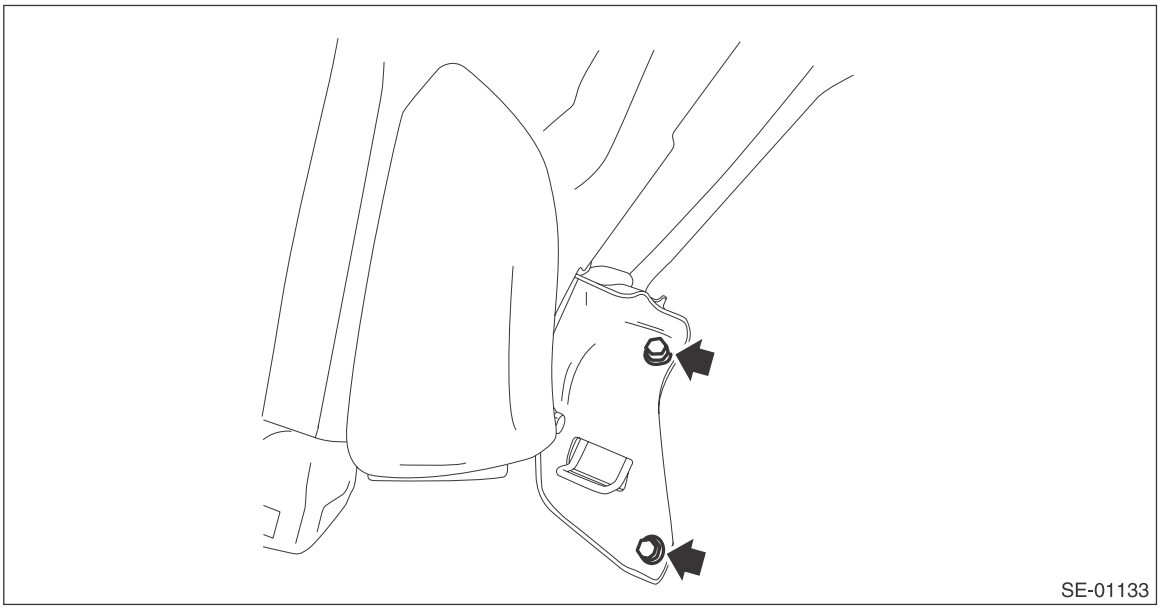

(2) Remove the screws.

(3) Turn over the bottom end of the backrest side pad in the forward direction so that the claws are released.

(4) Remove the backrest side pad by pulling it up.

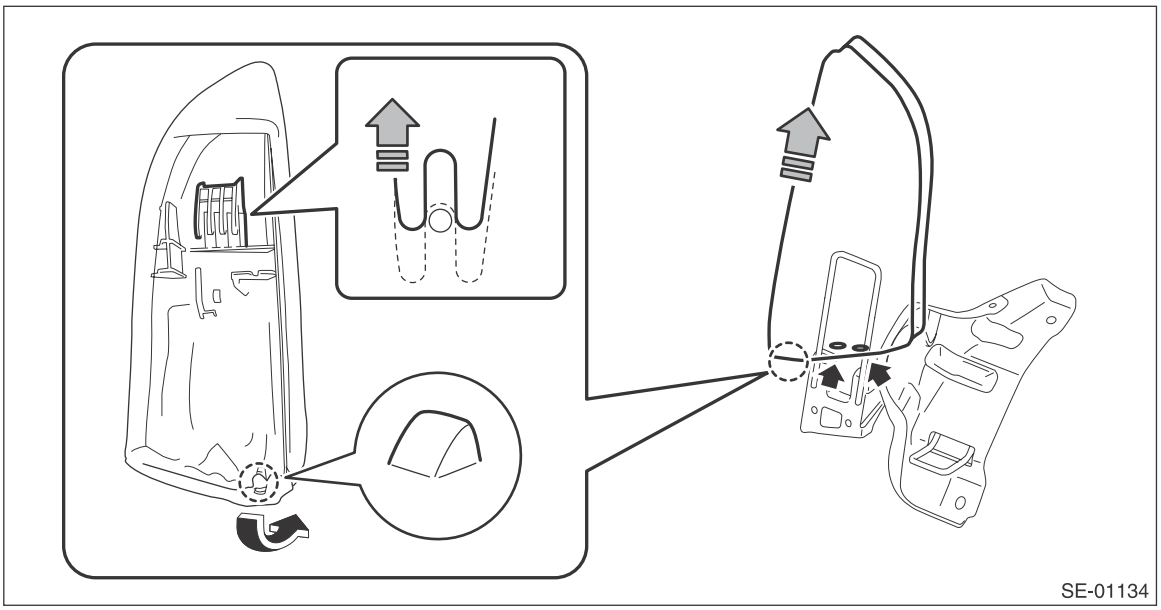

5) Referring to the above steps, remove the backrest side pad assembly LH.

2. OUTBACK MODEL

1) Disconnect the ground cable from battery.
2) Remove the rear seat cushion.
   (1) Pull up the seat cushion and release the hook.

CAUTION:
If the hook is removed from vehicle body, replace the hook with the new part to avoid the deterioration of seat securing.

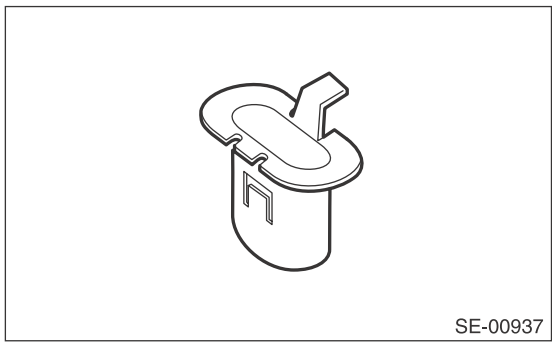
SE-00937

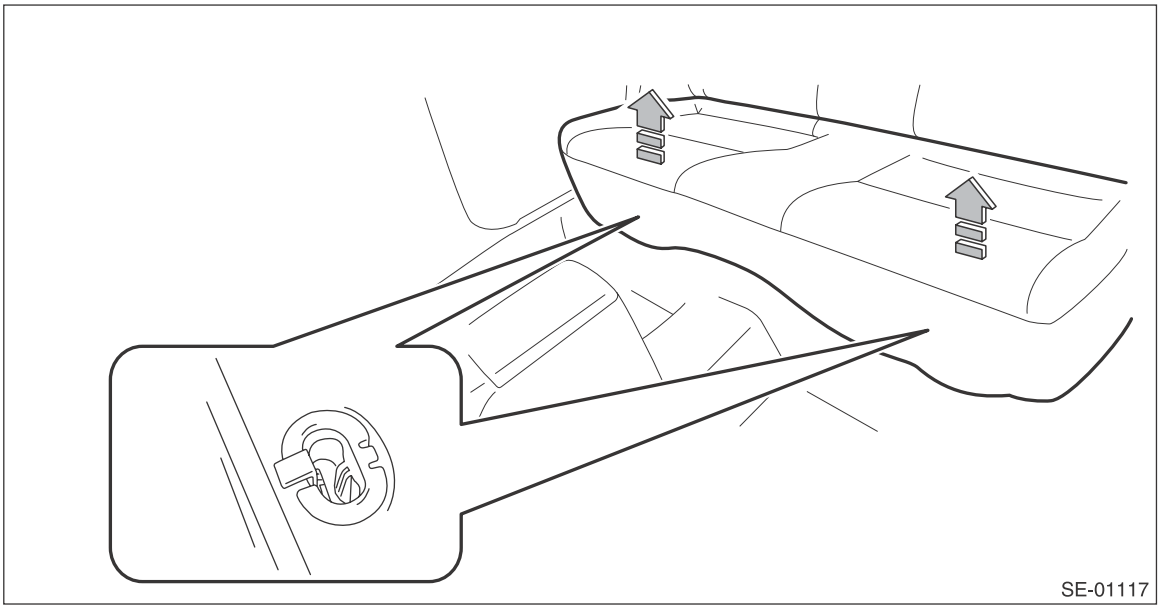
SE-01117

(2) Remove the hook (A) by pushing it back while lifting the front side of the seat cushion, and remove the seat cushion.

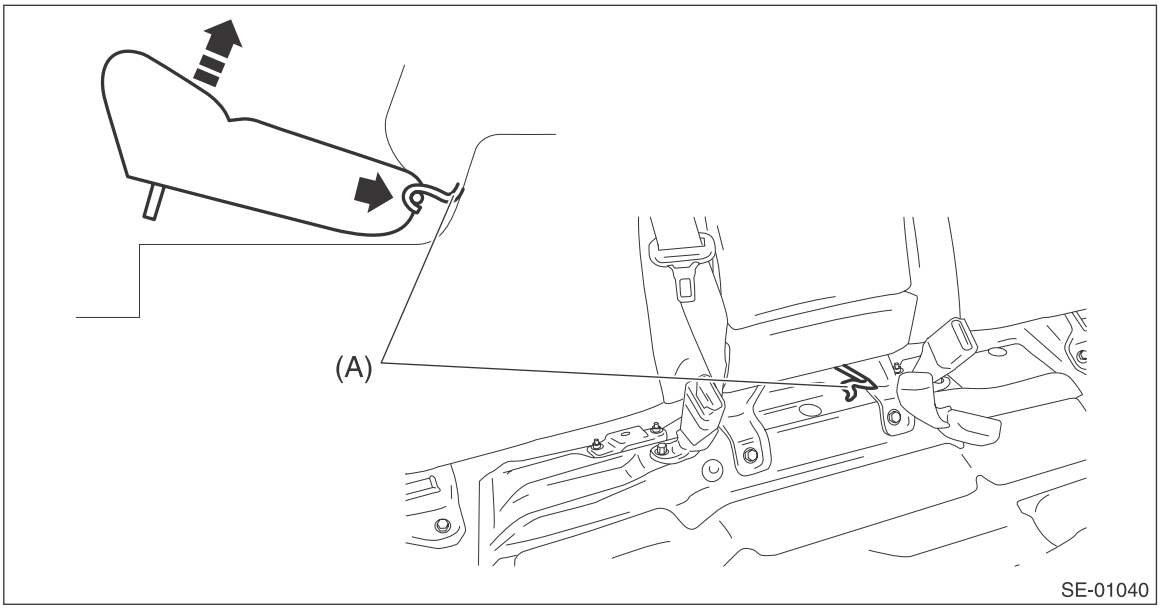

3) Remove the headrest.
4) Remove the backrest assembly RH.
(1) Remove the hinge bolts at the front of the backrest assembly RH.

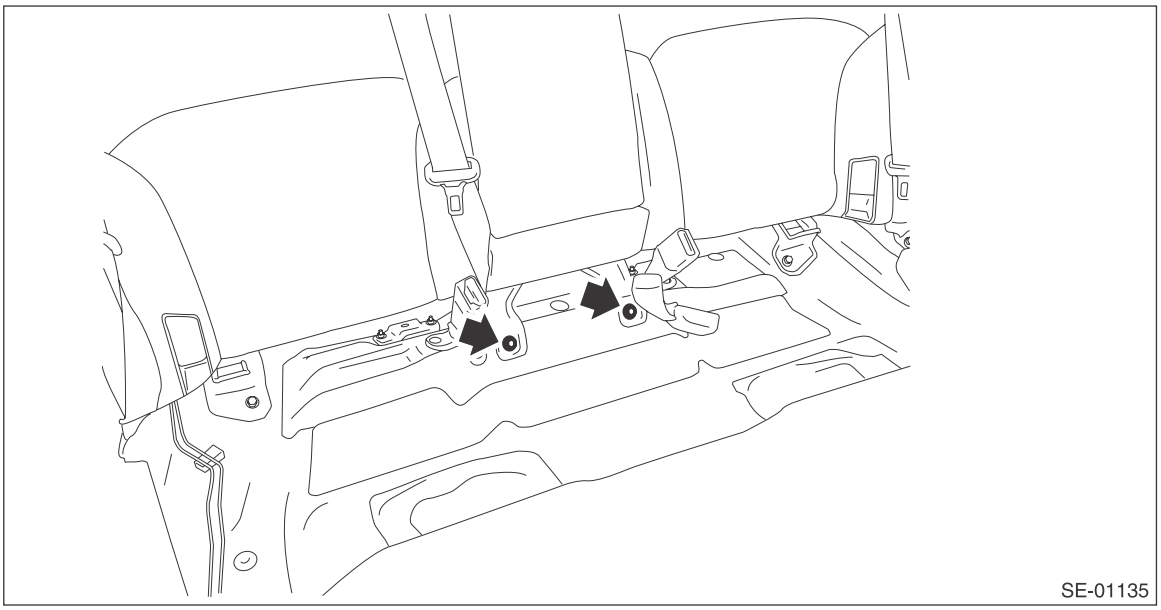

(2) Tilt the backrest forward, and then turn over the backrest backside mat.

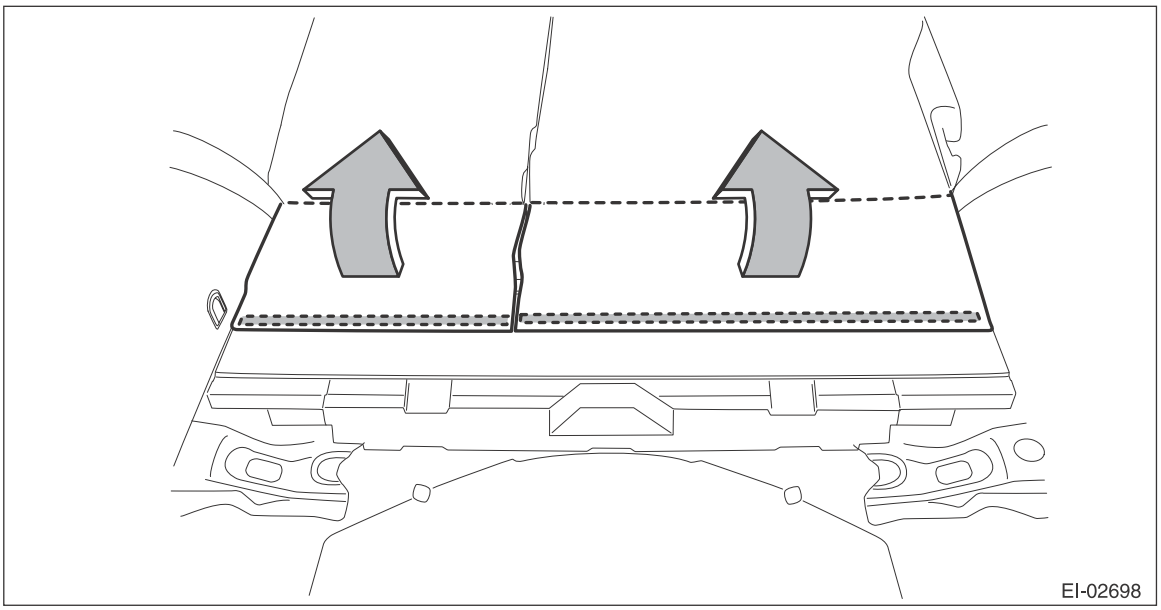

(3) Remove the clips, and remove the rear floor mat-front.

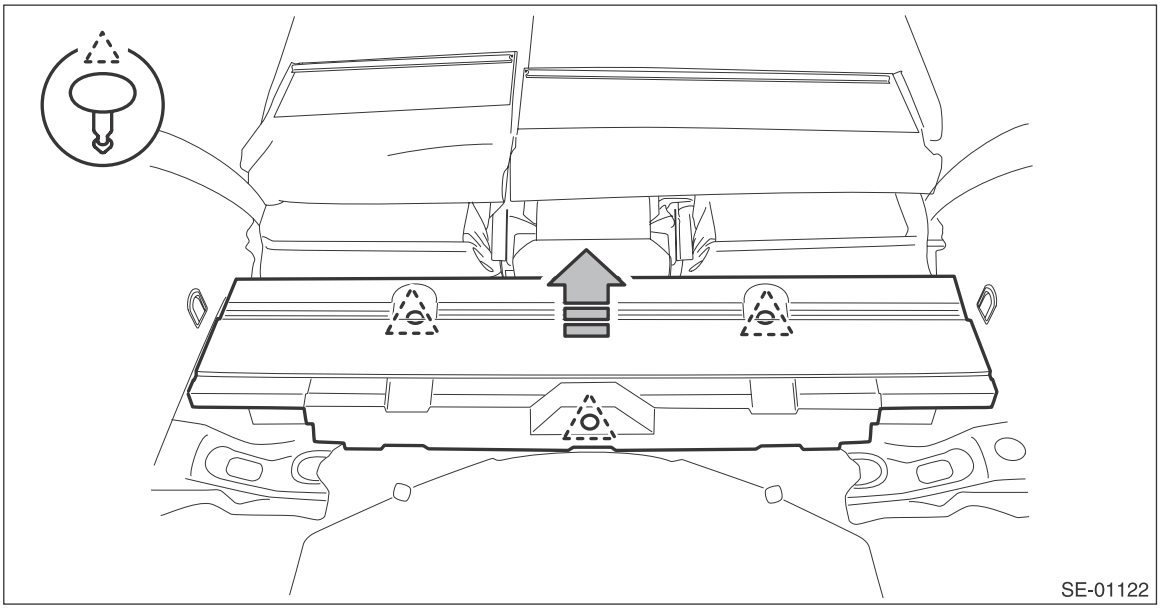

(4) Remove the nuts at the rear of backrest hinge.

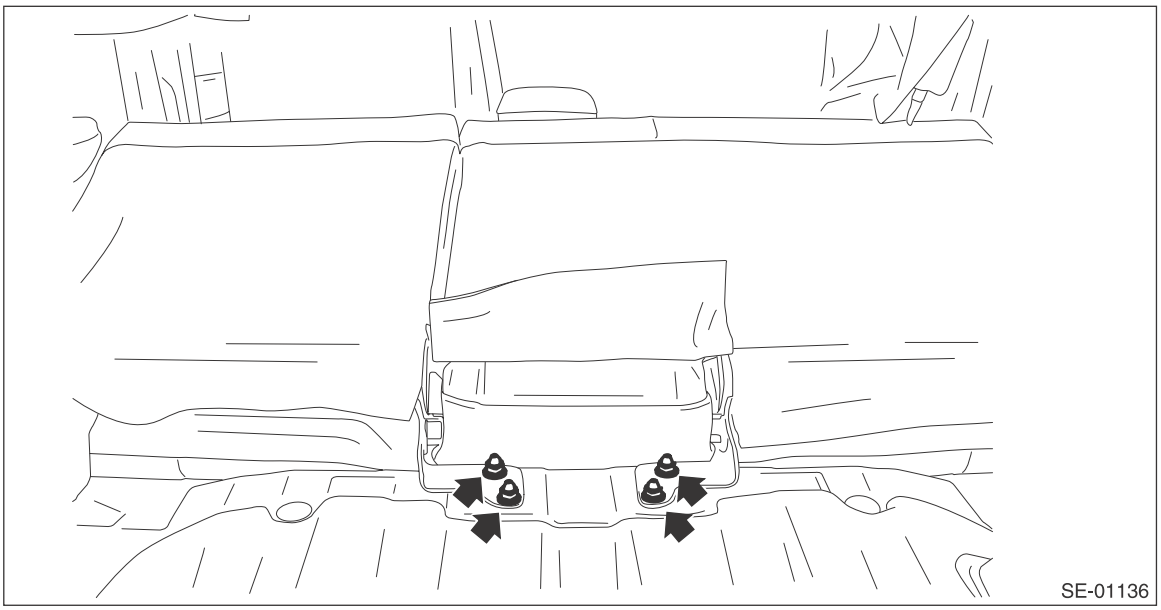

(5) Disconnect the backrest cable and reclining cable.

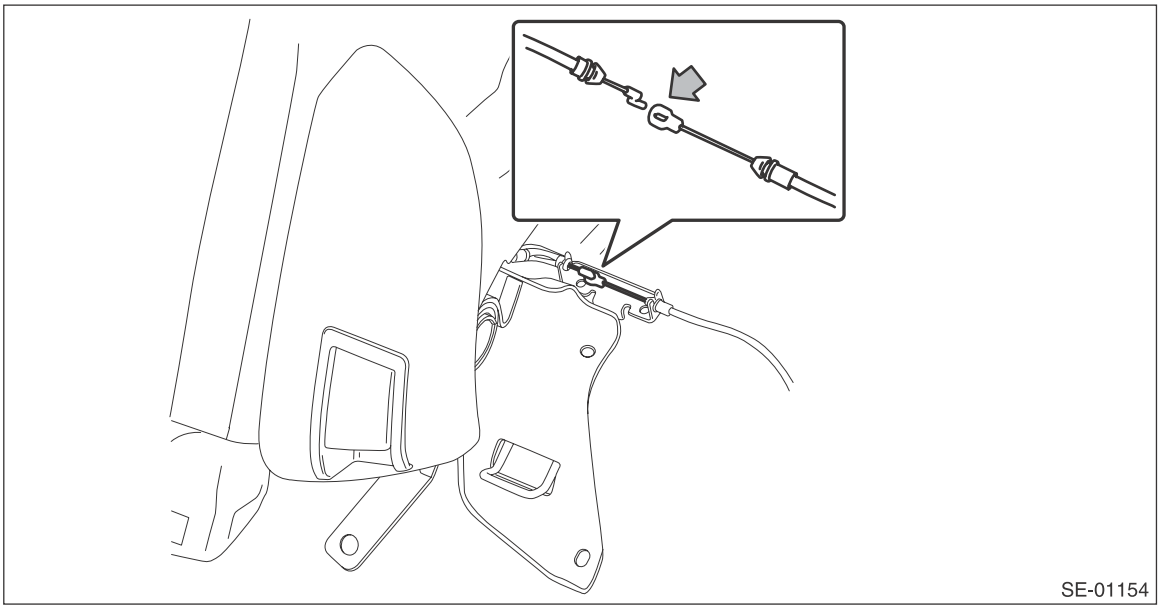

NOTE:
The backrest cannot be detached unless the backrest pin is aligned to the hinge assembly.

(6) Remove the backrest assembly RH from the hinge assembly RH.

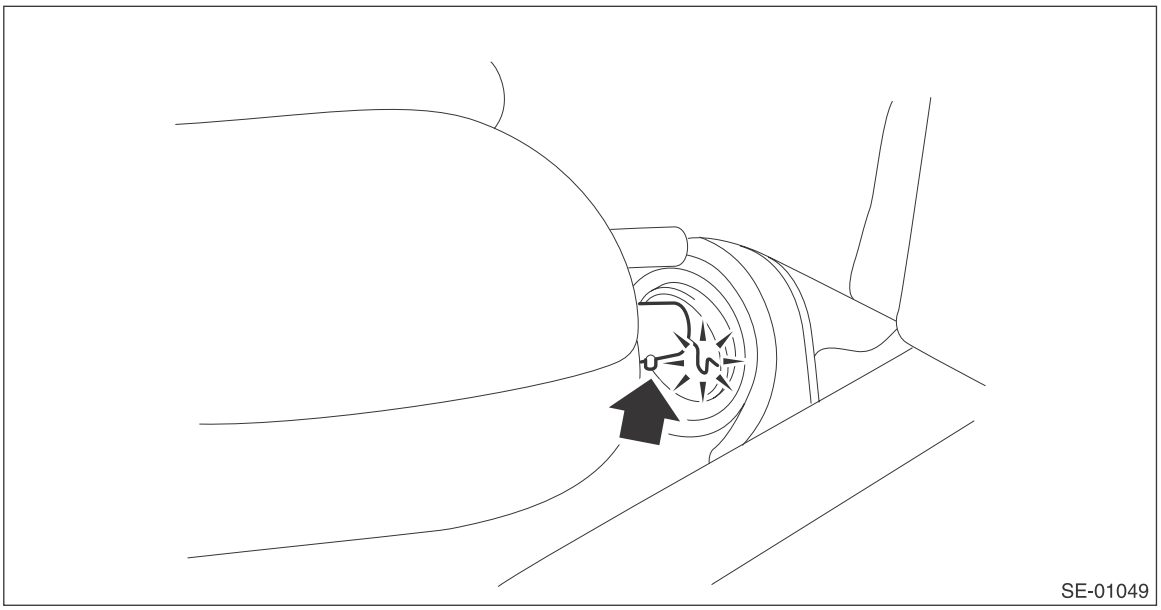

NOTE:
The backrest cannot be detached unless the backrest pin is aligned to the hinge assembly.

(7) Take out the part outside the vehicle so that the body is not damaged by the hinges.

5) Referring to the above steps, remove the backrest assembly LH.
6) Remove the bolts, and remove the backrest side pad assembly RH.

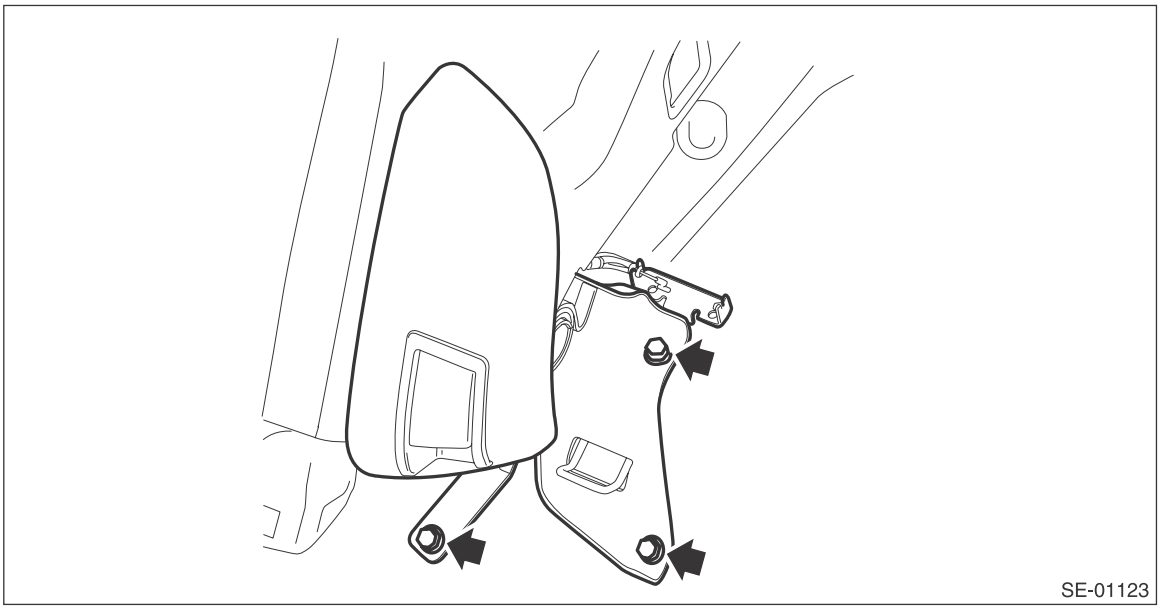

7) Remove the reclining lever assembly RH.

(1) Remove the screws and remove the reclining lever assembly by pulling it downward.

Preparation tool: Stubby screwdriver

(2) By pressing the wire cable claws, remove the relining cable from the reclining lever assembly.

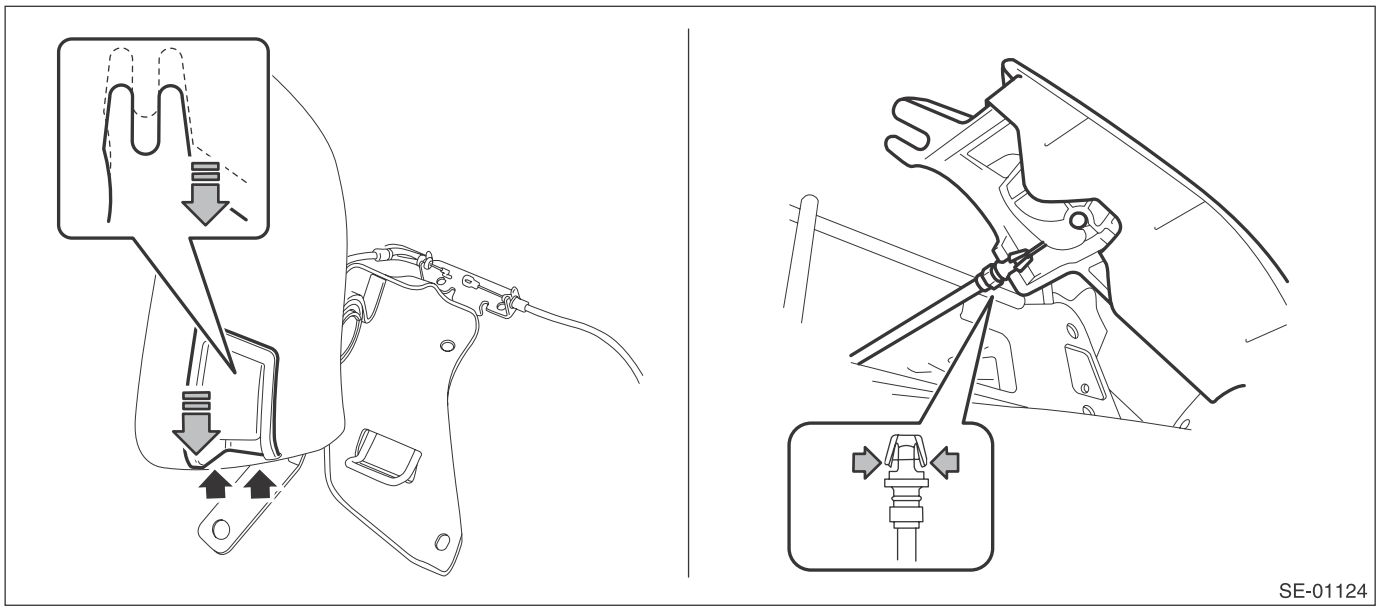

(3) Turn over the bottom end of the backrest side pad in the forward direction so that the claws are released.
(4) Remove the backrest side pad by pulling it up.

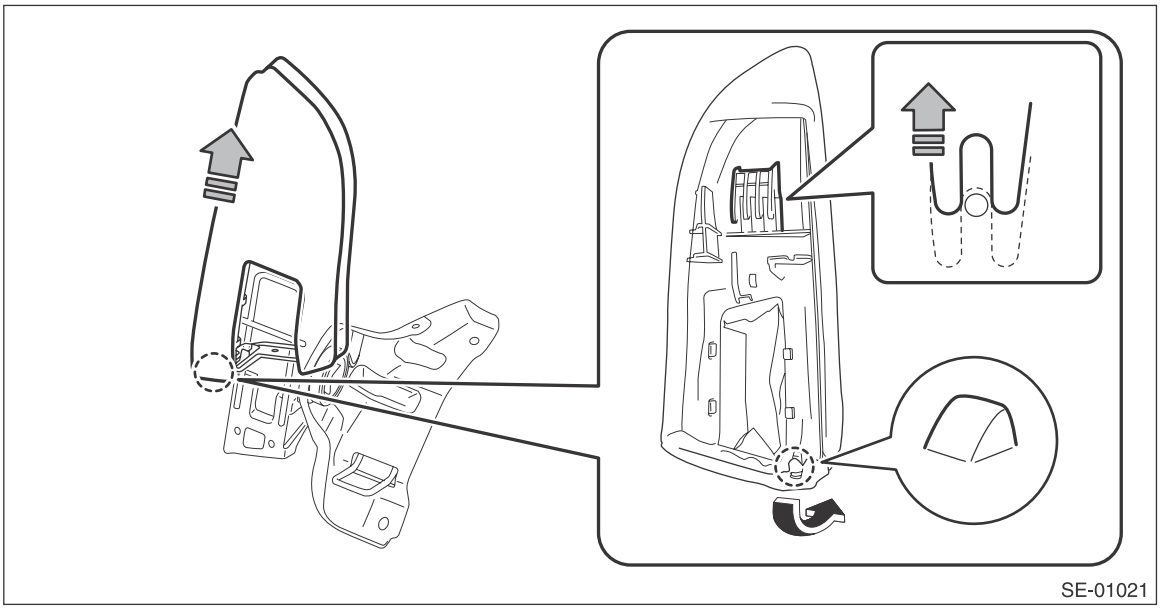

3. WIRE CABLE

Release lever cable (sedan model)

1) Pull the release lever in the trunk room, and then tilt the backrest forward.

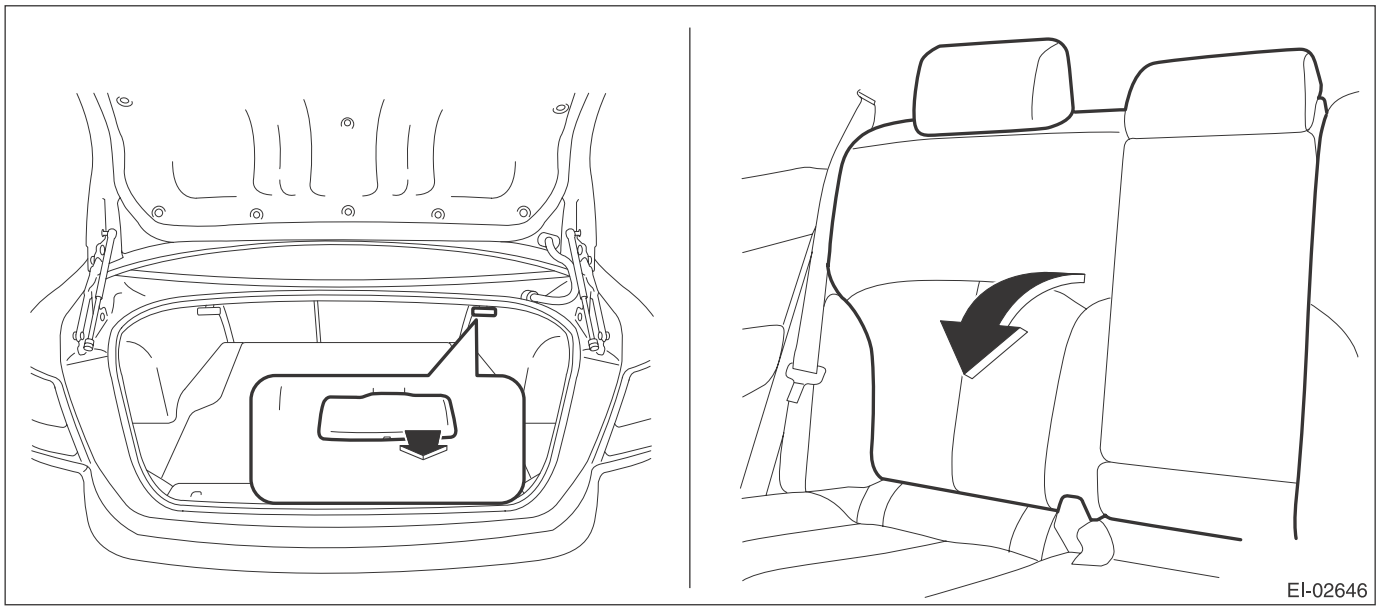

2) Remove the release lever assembly.
   (1) Remove the wire cable from lock assembly.
   (2) Remove the nuts, and then remove the lock assembly.
   (3) Remove the wire cable holder.
   (4) Press the stopper portion (a), and remove the release lever assembly while sliding it forward.

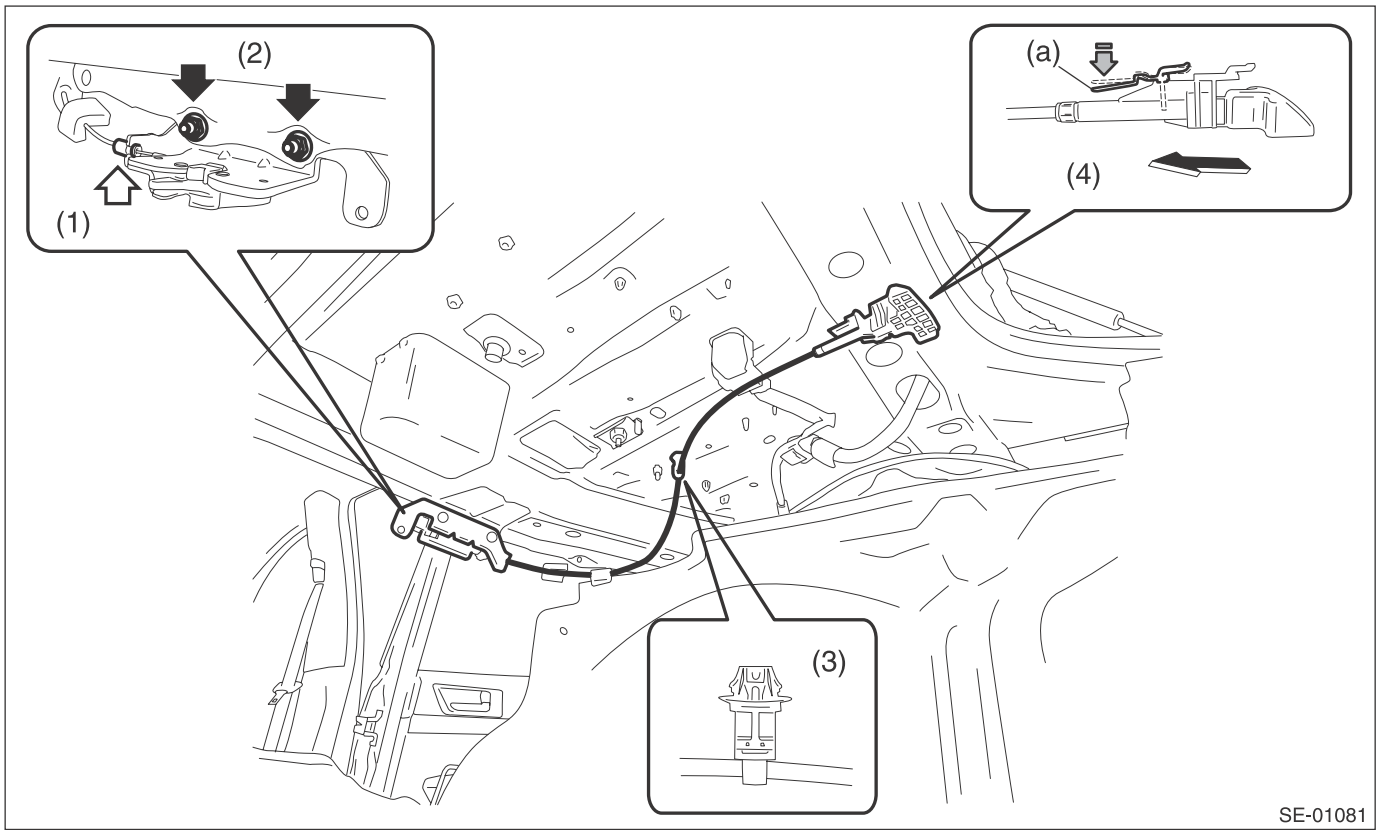

Reclining cable (OUTBACK model)

1) Remove the rear seat cushion.
   (1) Pull up the seat cushion and release the hook.

CAUTION:
If the hook is removed from vehicle body, replace the hook with the new part to avoid the deterioration of seat securing.

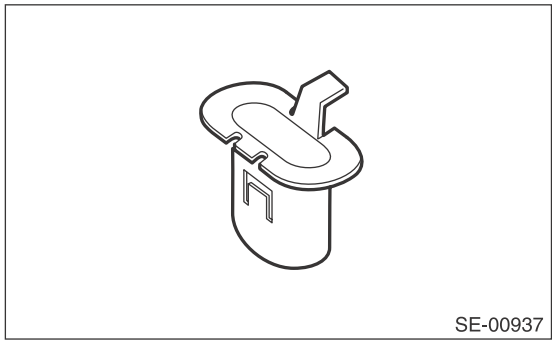
SE-00937

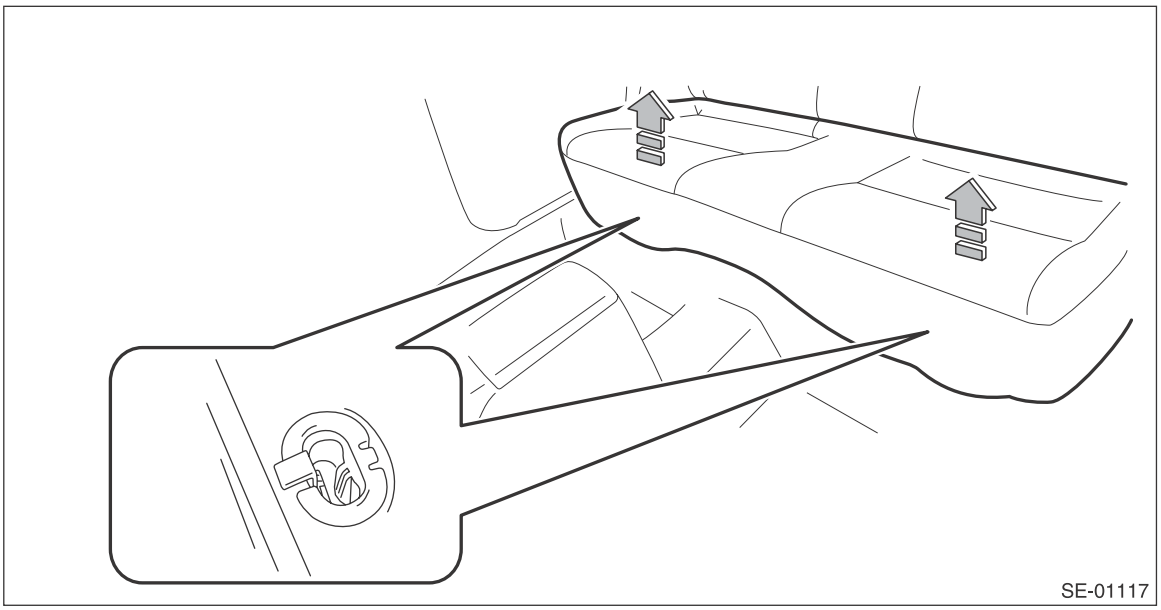
SE-01117

(2) Remove the hook (A) by pushing it back while lifting the front side of the seat cushion, and remove the seat cushion.

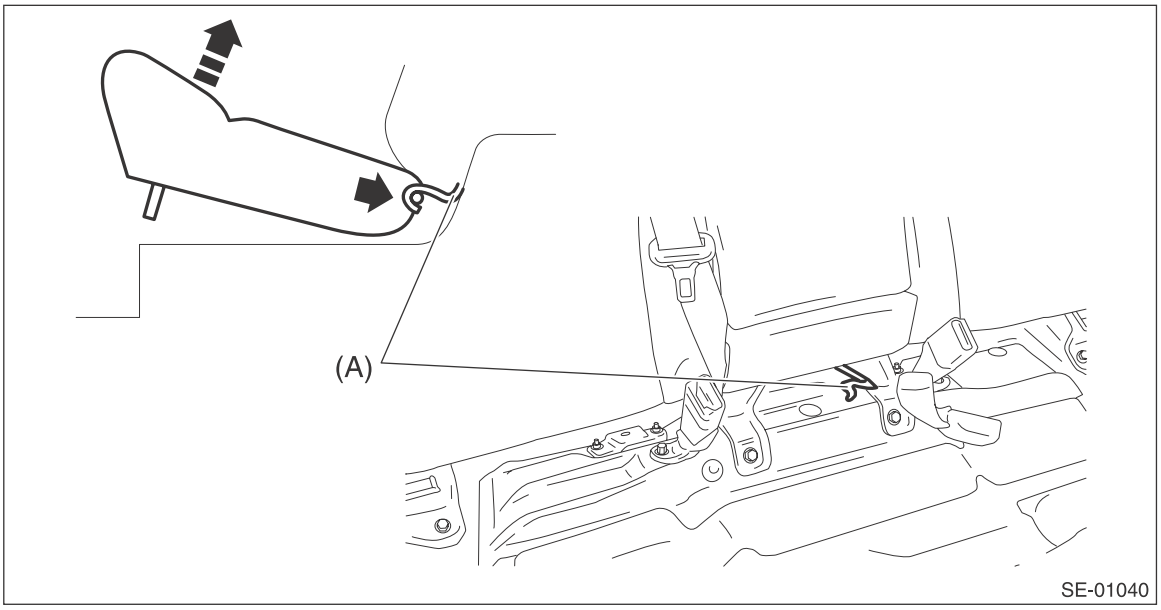

2) Tilt the backrest and turn over the seat backrest cover.

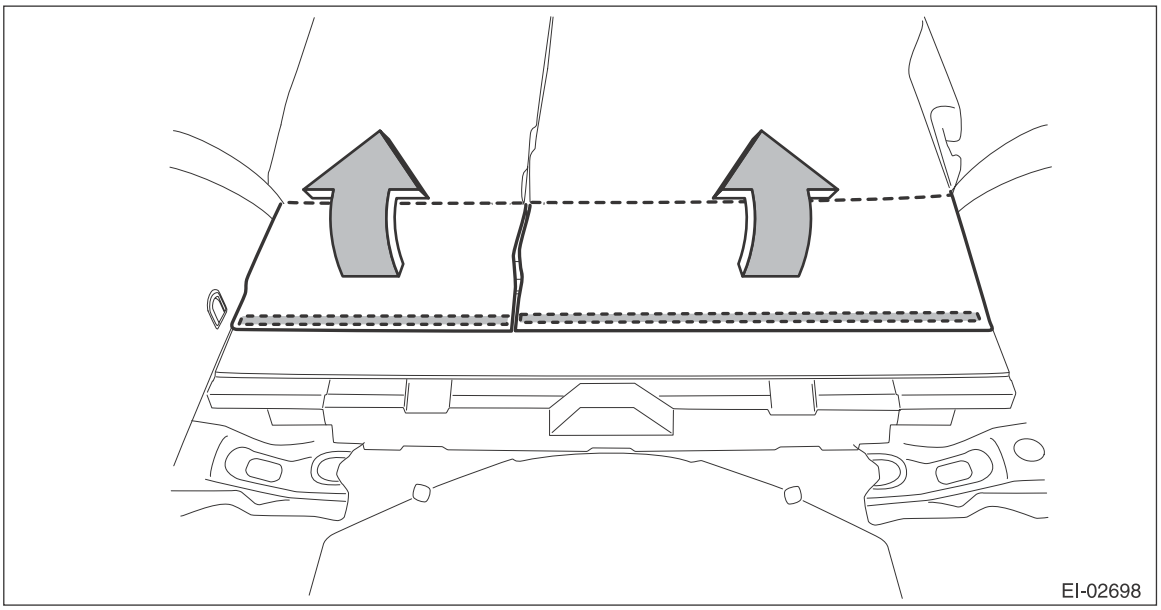

3) Remove the clips, and remove the rear floor mat-front.

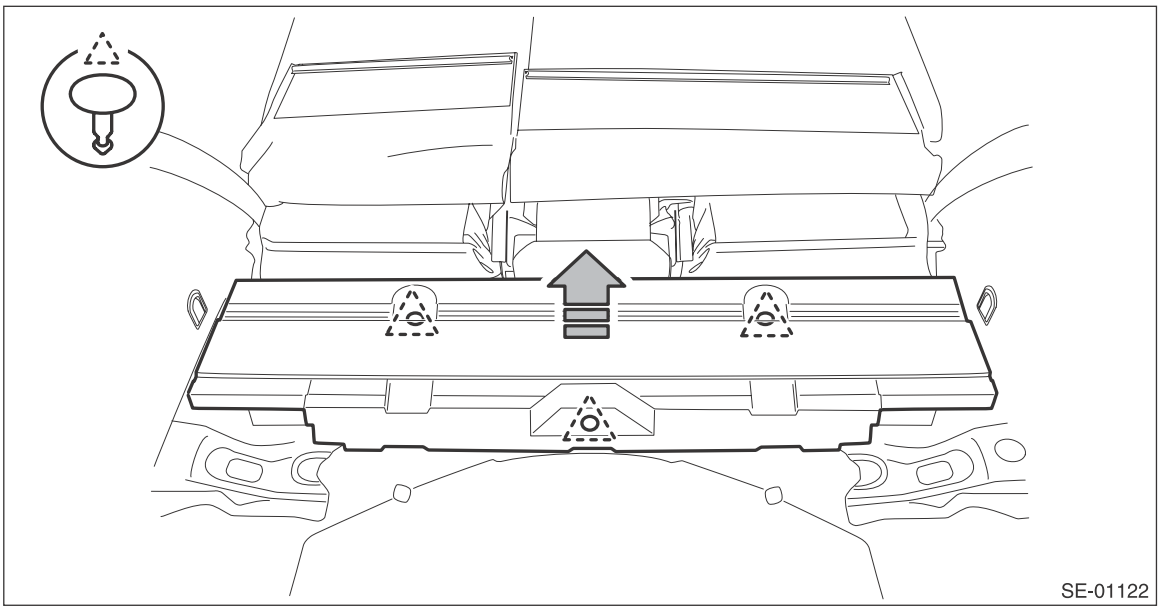

4) Remove the reclining lever assembly.
(1) Disconnect the backrest cable and reclining lever cable.

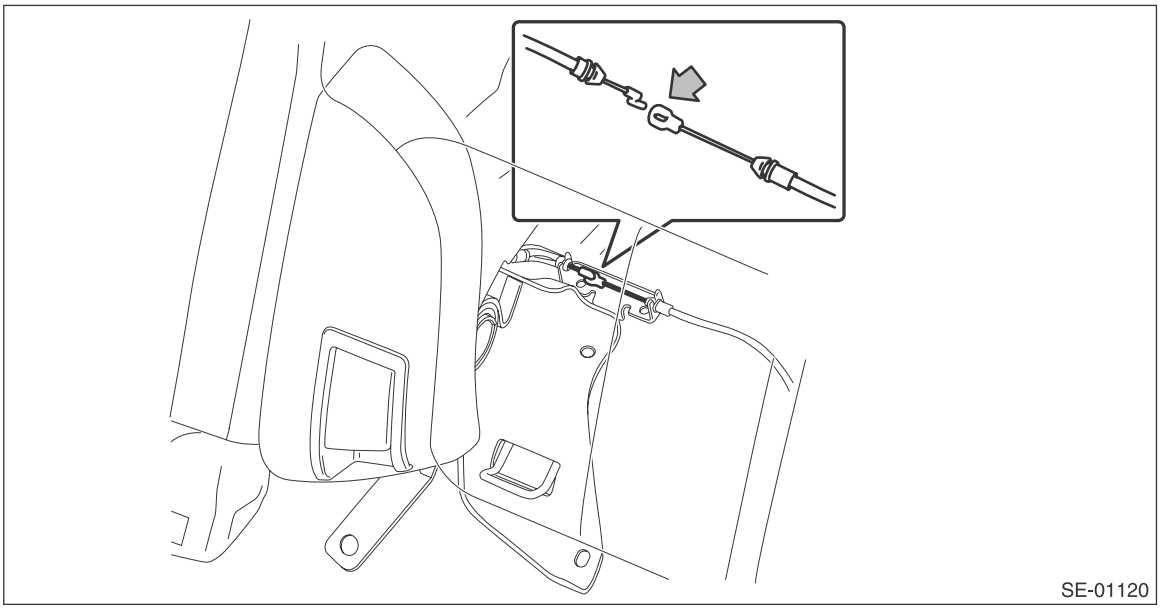

(2) Remove the screws and remove the reclining lever assembly by pulling it downward.

Preparation tool: Stubby screwdriver

(3) By pressing the wire cable claws, remove the relining cable from the reclining lever assembly.

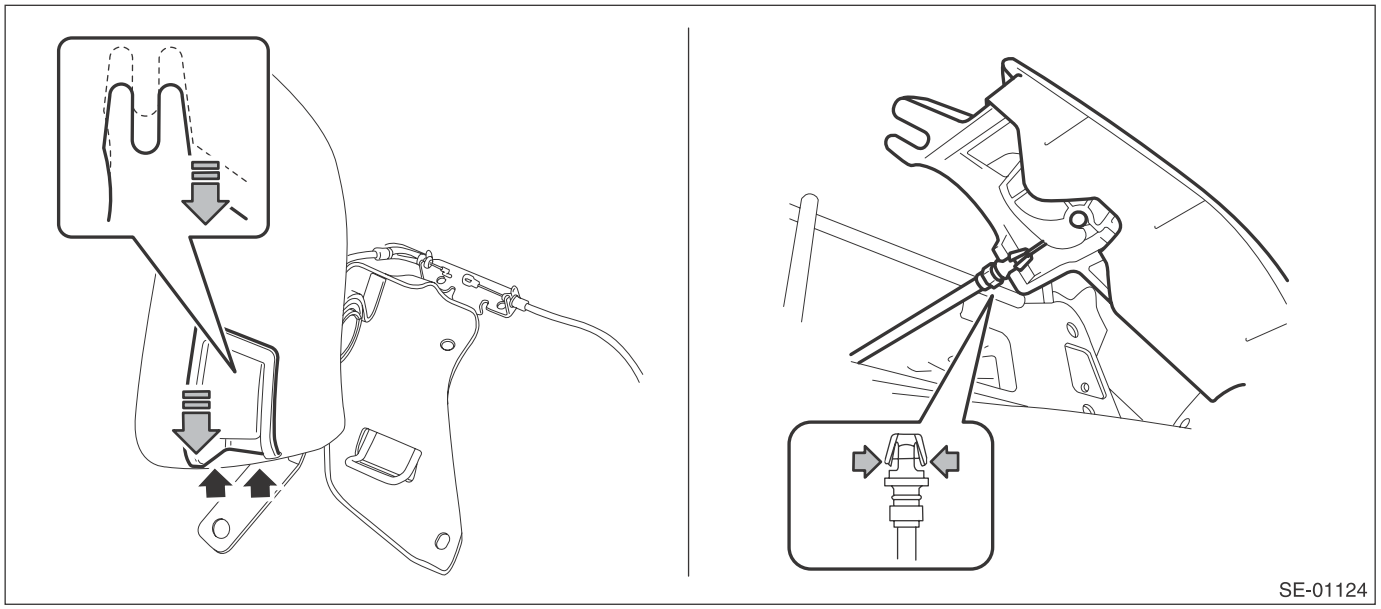

Backrest cable (OUTBACK model)

1) Remove the rear seat backrest assembly. <Ref. to SE-37, OUTBACK MODEL, REMOVAL, Rear Seat.>
2) Disassemble the backrest assembly and remove the backrest cable. <Ref. to SE-48, DISASSEMBLY, Rear Seat.>

B: INSTALLATION

Install each part in the reverse order of removal.

CAUTION:
If the hook is removed from vehicle body, replace the hook with the new part to avoid the deterioration of seat securing.

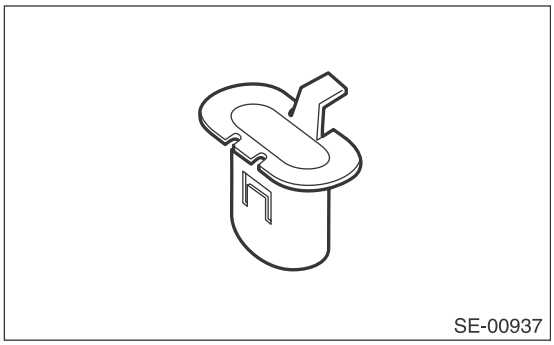

NOTE:
- After installing the backrest, make sure that each seat belt operates normally.
- Check that the remote lever and reclining lever operate normally.
- Make sure that they are properly secured on each hook on the vehicle side.

Tightening torque:
Refer to "COMPONENT" of "General Description".
Sedan model:<Ref. to SE-7, REAR SEAT (SEDAN MODEL), COMPONENT, General Description.>
OUTBACK model <Ref. to SE-8, REAR SEAT (OUTBACK MODEL), COMPONENT, General Description.>

C: DISASSEMBLY

1) Remove the rear seat.
- Sedan model:<Ref. to SE-32, SEDAN MODEL, REMOVAL, Rear Seat.>
- OUTBACK model <Ref. to SE-37, OUTBACK MODEL, REMOVAL, Rear Seat.>

2) Remove the headrest.
3) Remove the backrest back board.
   (1) Remove the plastic fastener at the lower part of backrest assembly, and open the fastener at both side to turn over the backrest cover.
   (2) Remove the backrest striker cover. (Sedan model)
   (3) Remove the screws (A) and clips (B).
   (4) Remove the hog rings (C) and remove the backrest backboard.

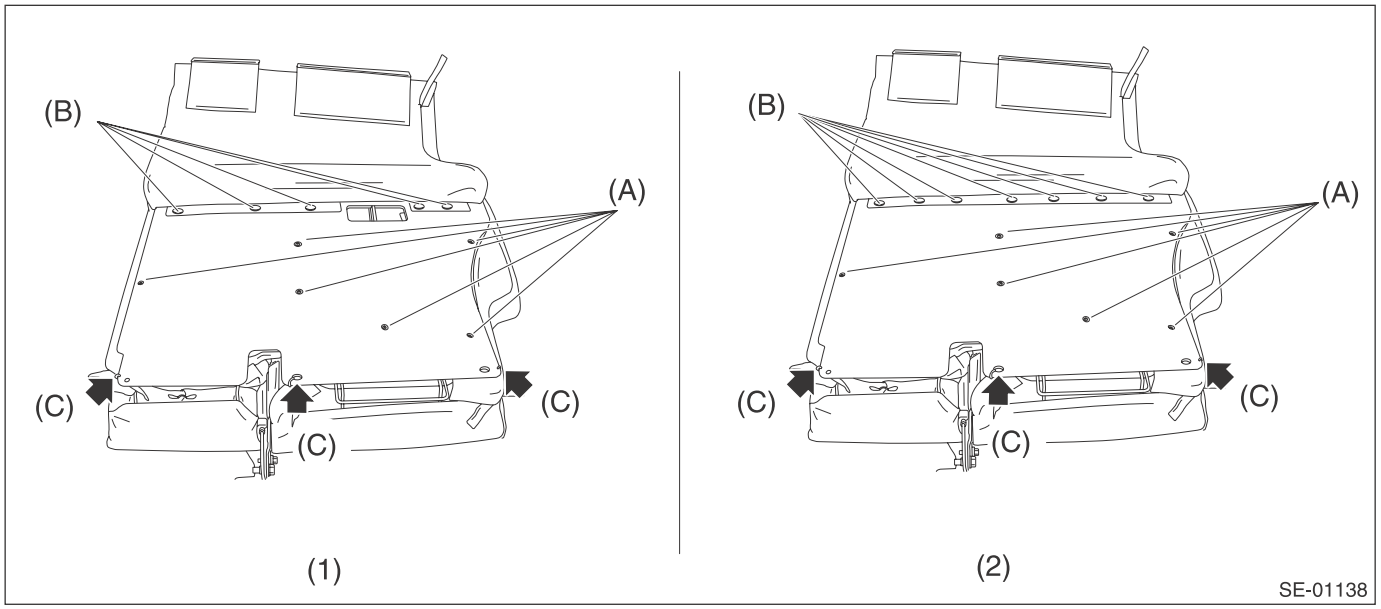

(1) Sedan model (2) OUTBACK model

4) Remove the headrest bushing.

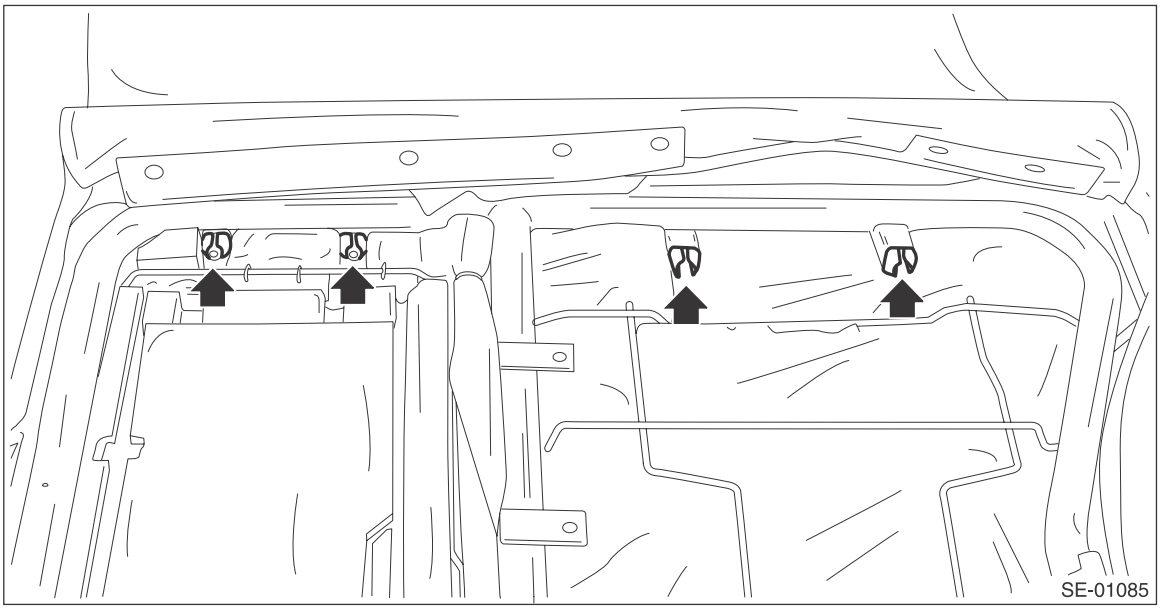

NOTE:
Catch the tip of headrest bushing with pliers and push it from inside seat to outside to remove it.
5) Remove the armrest assembly.

(1) Remove the armrest hinge cover by pulling it in the direction of arrow (black).
(2) Remove the screws, and remove the armrest.

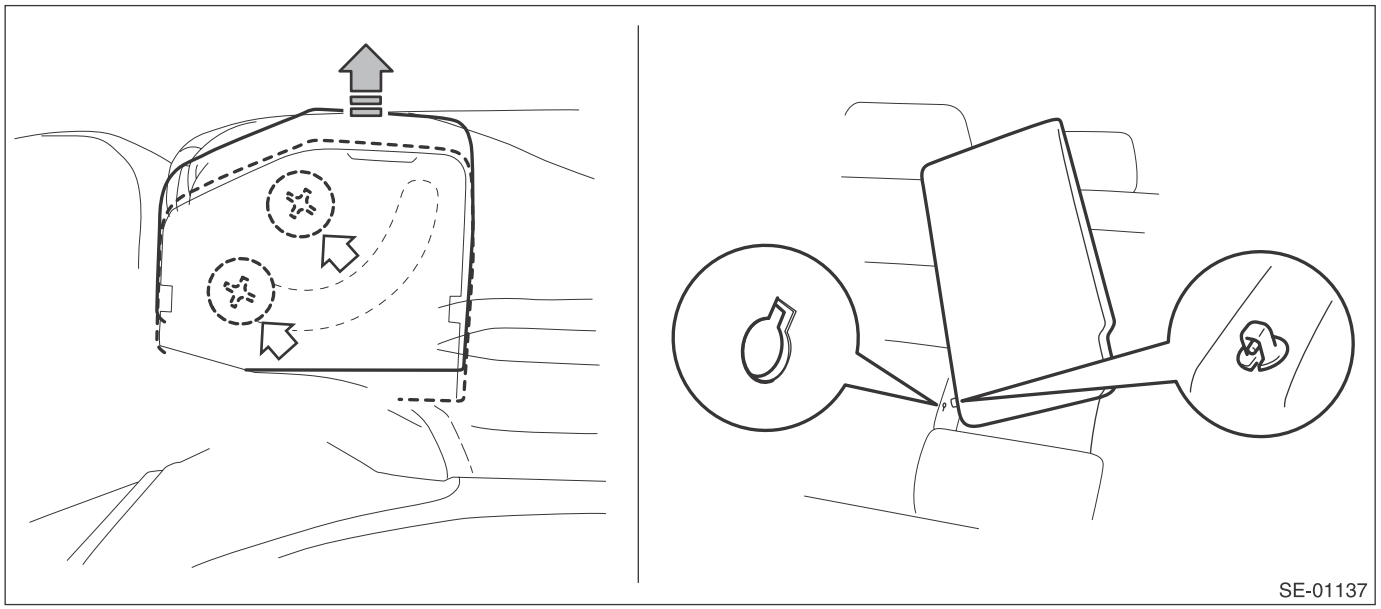

NOTE:
The armrests cannot be detached while the backrest assembly RH and armrest side pin positions are not aligned.
6) Remove the plastic hooks and hog rings, and remove the pad at lower side of armrest.

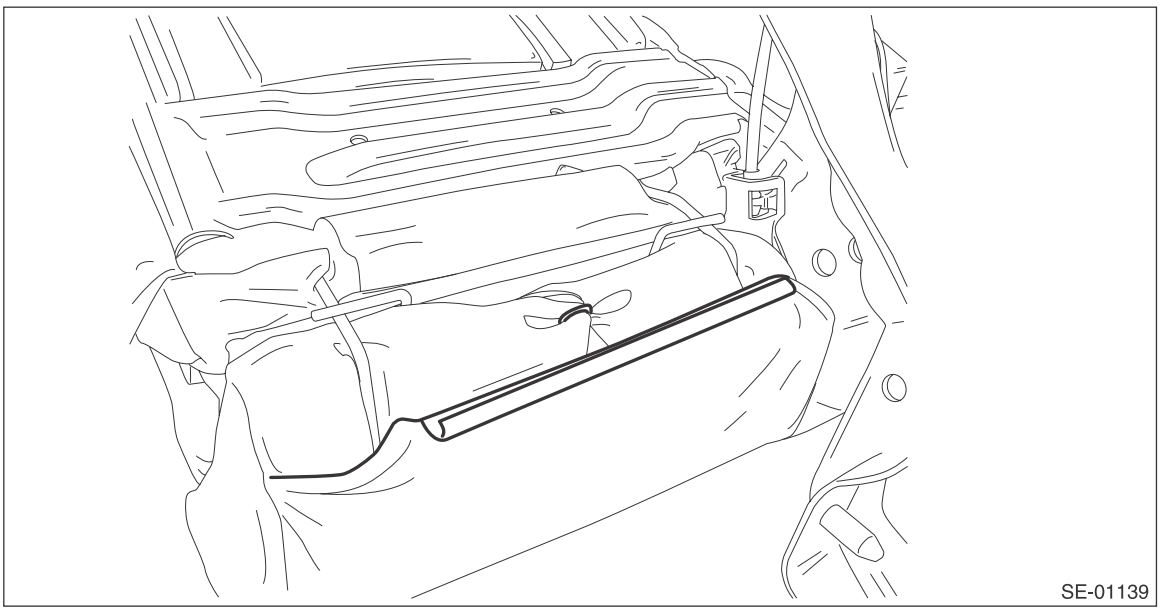

7) Remove the hog rings (A) and remove the backrest pad & frame assembly from the backrest assembly.

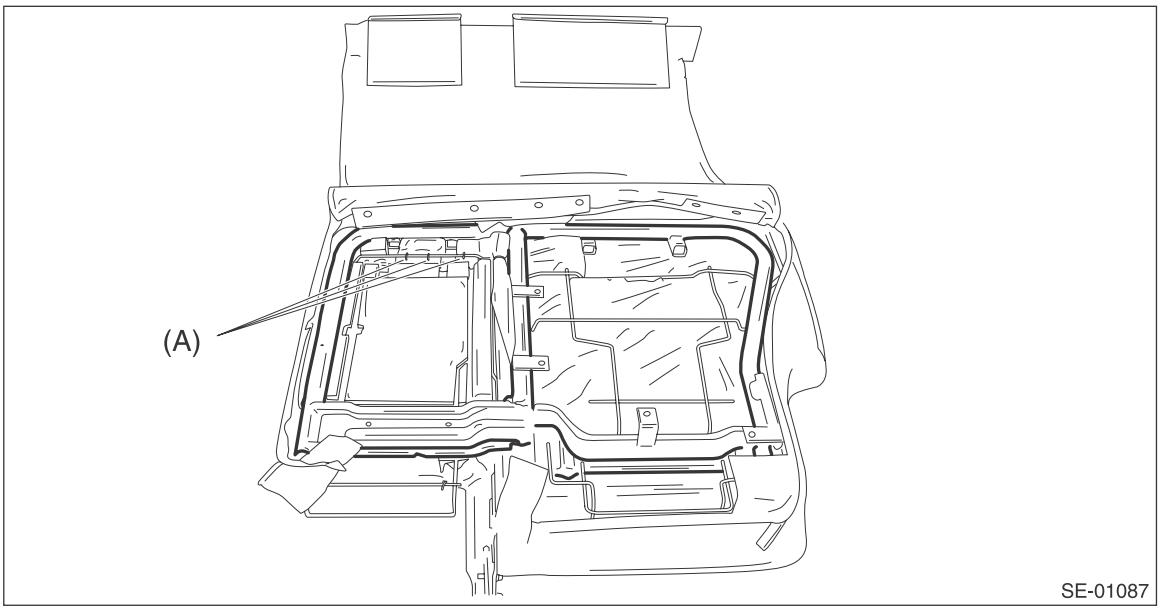

8) Remove the hog rings (A) on the front side of backrest, and then remove the backrest cover.

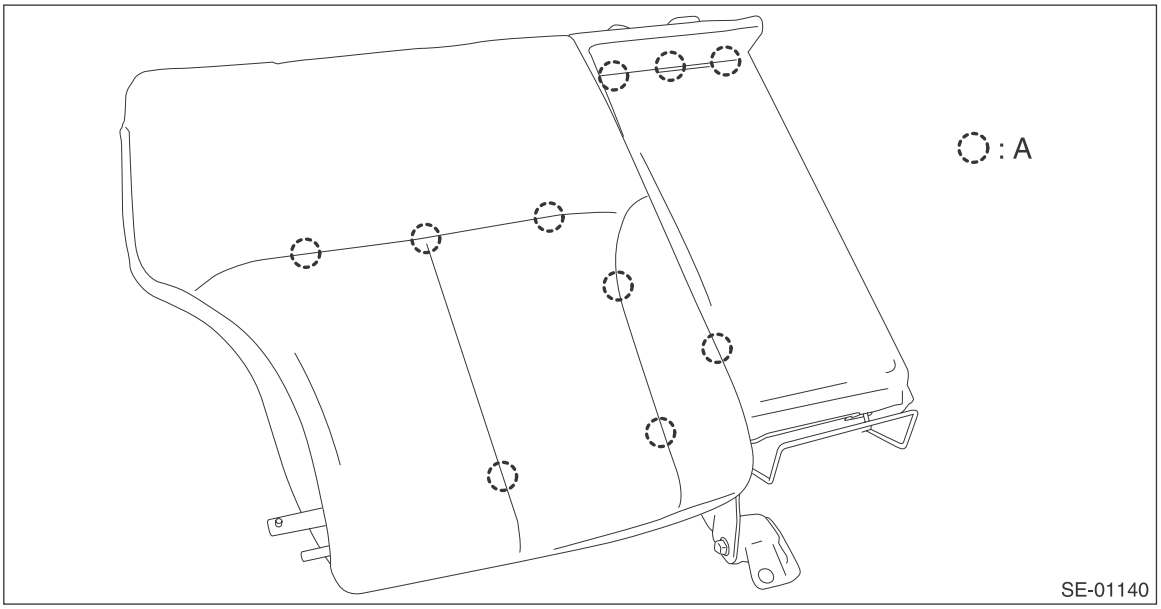

9) Referring to the step 2), disassemble the backrest assembly LH.
10) Remove the armrest cover.
    (1) Take out the bottom sheets (a) from the cup holder and remove the screws (b).
    (2) Remove the cup holder assembly (c).

(3) Detach the plastic fastener (d) and remove the armrest cover.

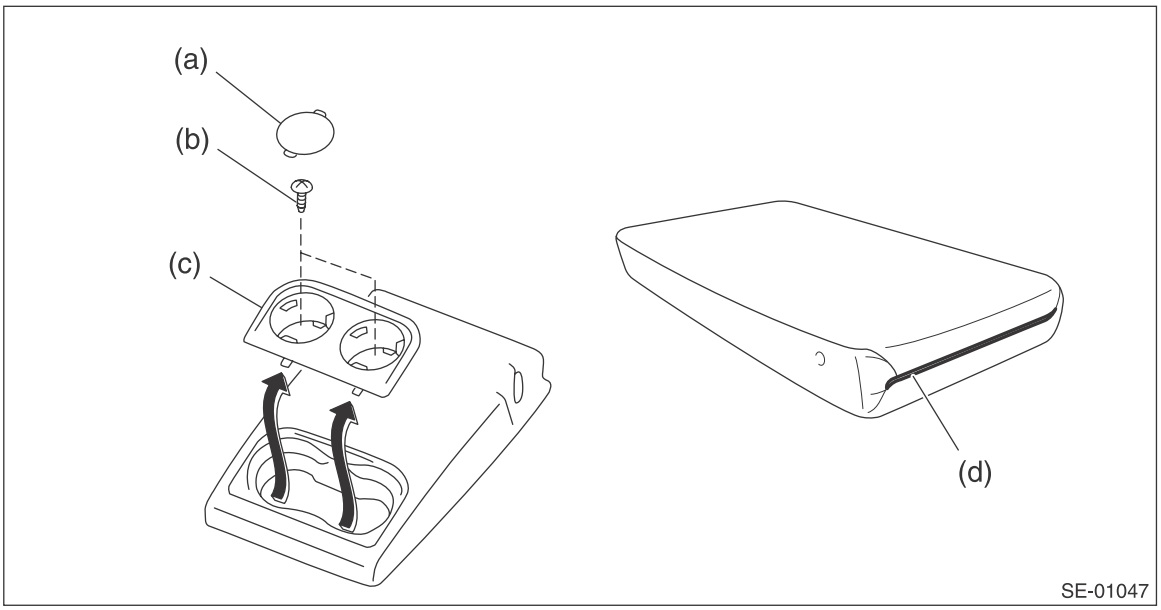

11) Detach the plastic fastener and hog ring, and then remove the headrest cover.

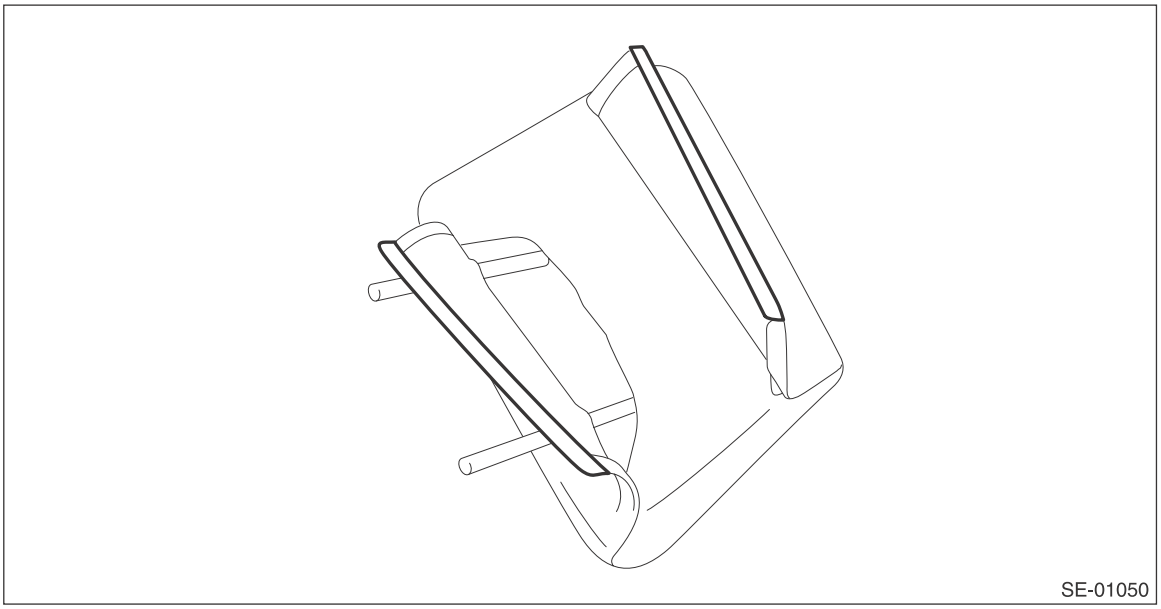

12) Remove the hog rings (A) on the rear side of the seat cushion.

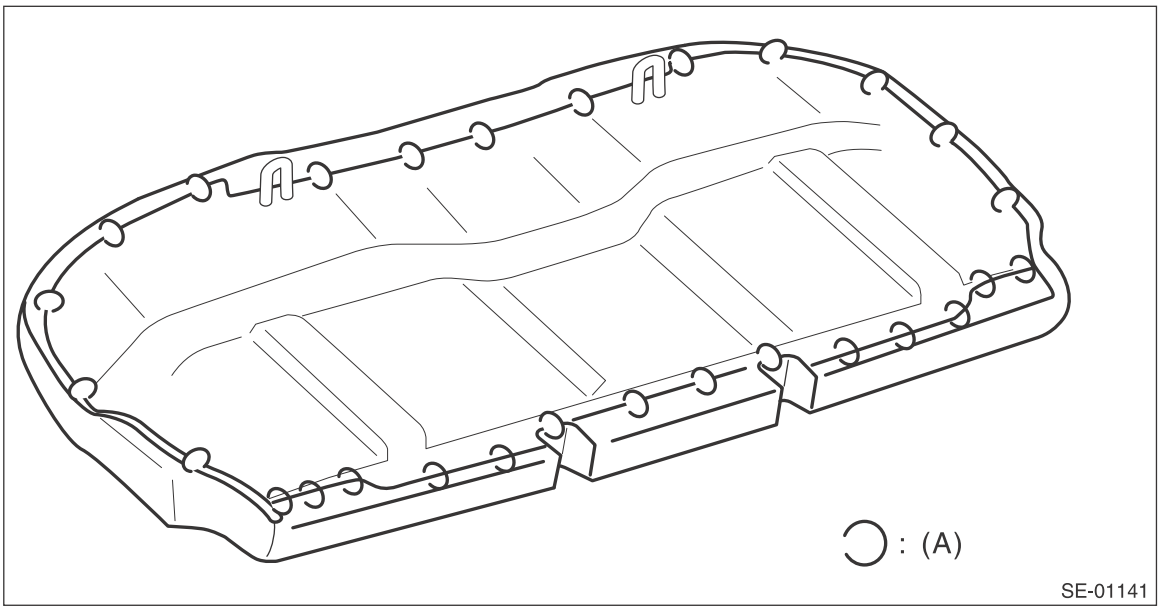

13) Remove the hog rings (A), then remove the seat cushion cover.

- Sedan model

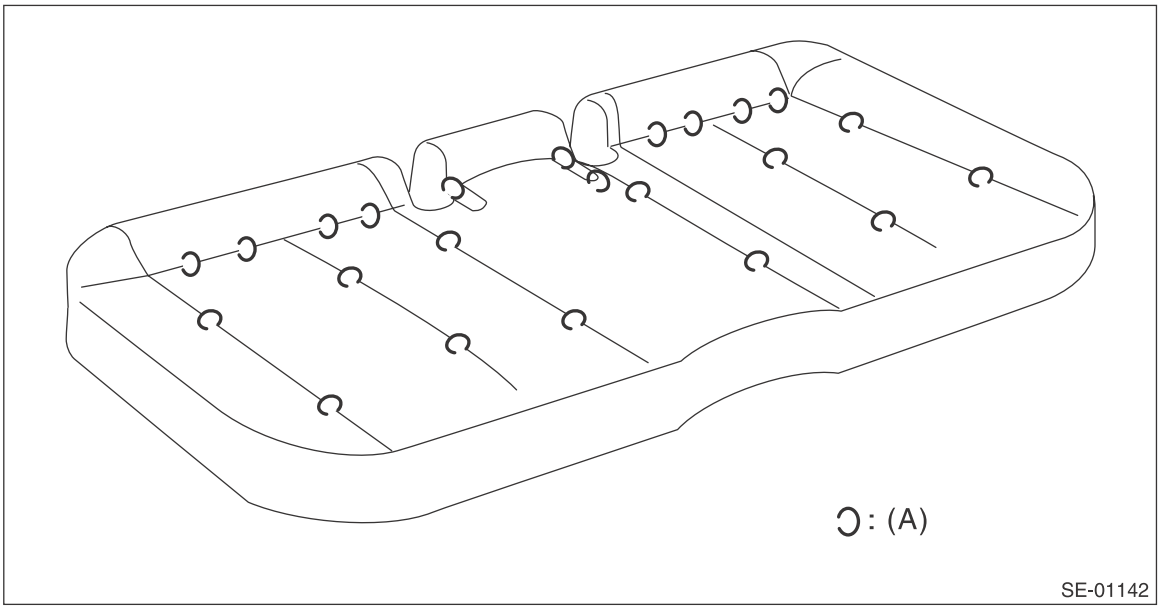

- OUTBACK model

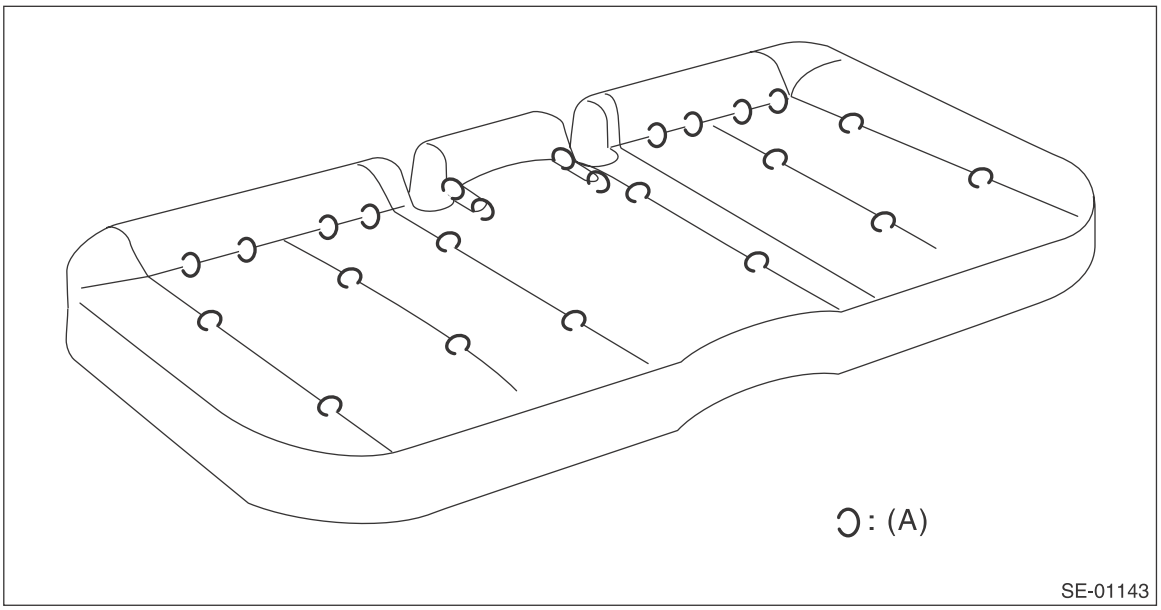

D: ASSEMBLY

CAUTION:
- **Do not re-use the hog rings.**
- **Secure the hog ring using hog ring pliers.**
- **Install the hog rings to the specified points securely and make sure that no wrinkle or twisting on backrest cover.**

1) Assemble in the reverse order of disassembly.

NOTE:
- Do not contaminate or damage the cover.
- While installing the hog rings, prevent the seat from getting wrinkled.

Tightening torque:
Refer to "COMPONENT" of "General Description".
Sedan model:<Ref. to SE-7, REAR SEAT (SEDAN MODEL), COMPONENT, General Description.>
OUTBACK model <Ref. to SE-8, REAR SEAT (OUTBACK MODEL), COMPONENT, General Description.>

2) Before installation, check the following items.
- No break and fray on seat cover.
- No fray or deformation on each wire cable.

3) Install each part in the reverse order of removal.

4. Power Seat System

A: REMOVAL

CAUTION:
When removing the front seat, Disconnect the ground cable from battery before disconnecting the side airbag module harness connector, and wait for 60 seconds before starting the operation.

1. POWER SEAT SWITCH

1) Remove the seat from vehicle. <Ref. to SE-10, REMOVAL, Front Seat.>
2) Remove the seat side cover OUT.
   (1) Release the claw in the rear section of the seat side cover.
   (2) Release the claw in the upper section of the seat side cover.
   (3) Remove the clip and release the claw in the front section of the seat side cover
   (4) Disconnect the power seat switch and lumber switch connectors and remove the seat side cover OUT.

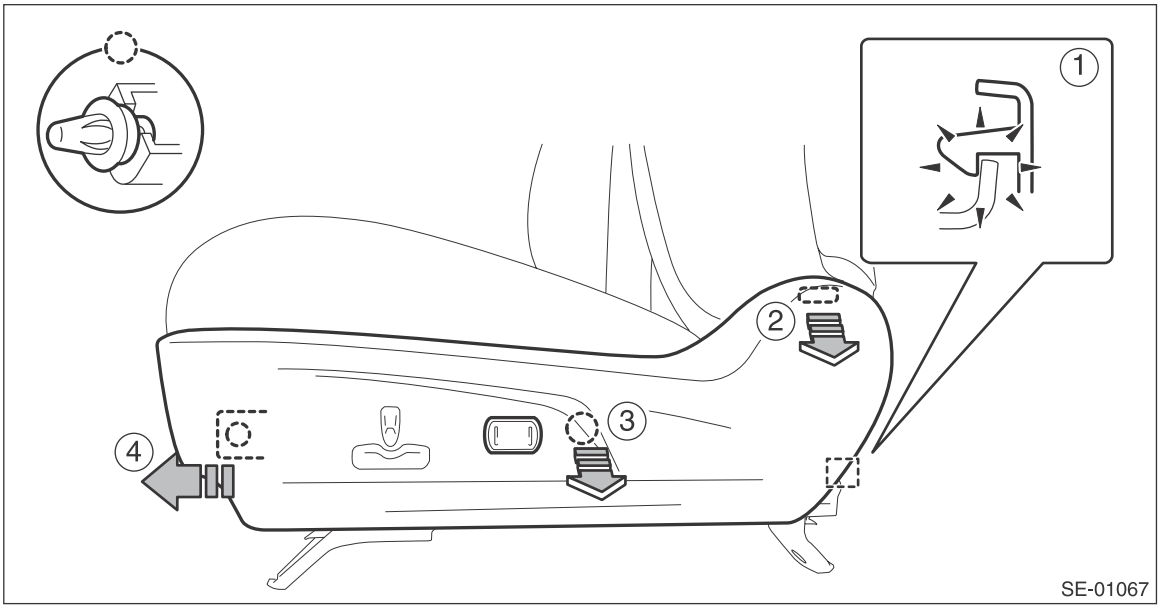

3) Remove the screws to remove the power seat switch assembly.

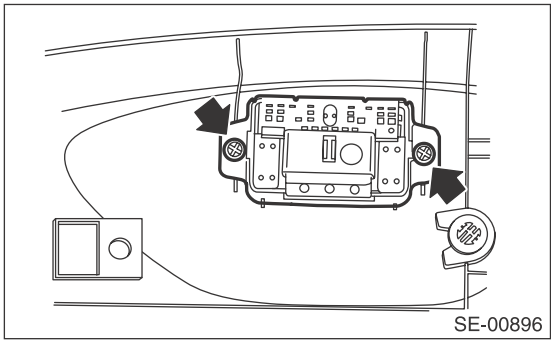

2. LUMBAR SWITCH

1) Remove the seat from vehicle. <Ref. to SE-10, REMOVAL, Front Seat.>
2) Remove the seat side cover OUT.
   (1) Release the claw in the rear section of the seat side cover.
   (2) Release the claw in the upper section of the seat side cover.
   (3) Remove the clip and release the claw in the front section of the seat side cover
   (4) Disconnect the power seat switch and lumber switch connectors and remove the seat side cover OUT.

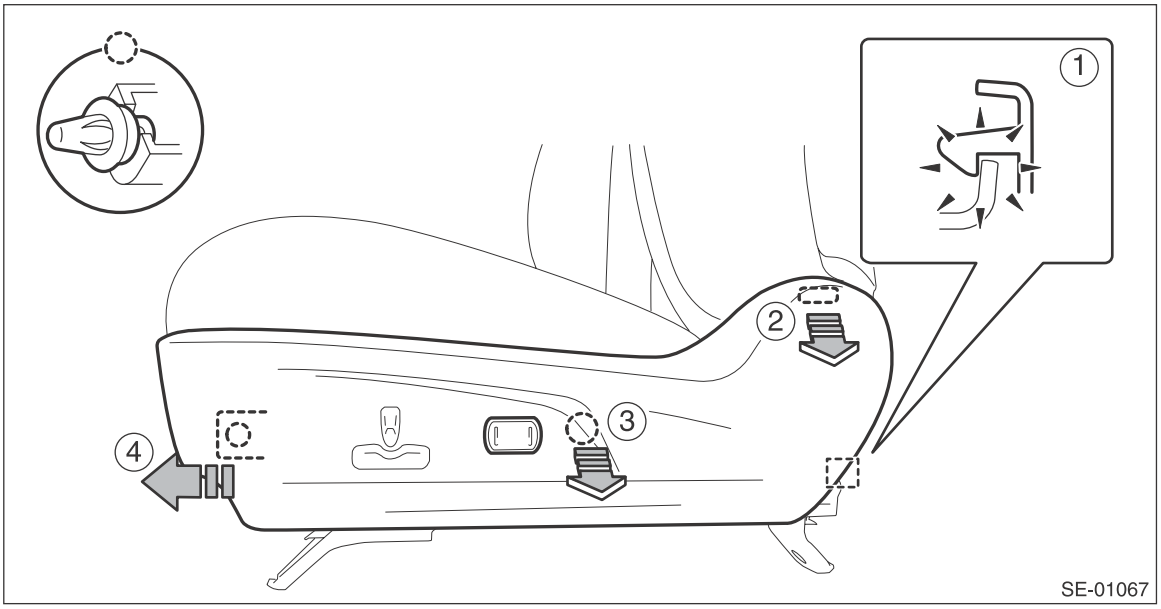

3) Disconnect the connector and remove the lumbar switch assembly.

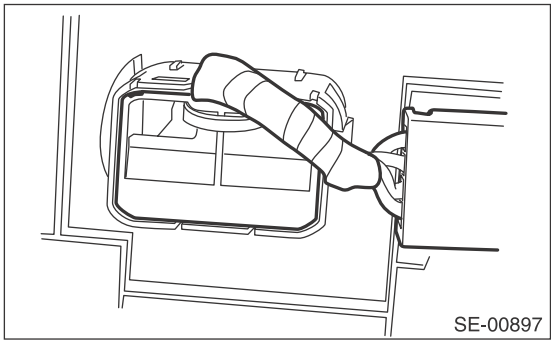

B: INSTALLATION

Install each part in the reverse order of removal.

C: INSPECTION

1. WIRING DIAGRAM

Refer to “Power Seat System” in the wiring diagram. <Ref. to WI-178, WIRING DIAGRAM, Power Seat System.>

2. TROUBLE SYMPTOM

Symptoms	Criteria
All functions do not operate. <Ref. to SE-58, ALL FUNCTIONS DO NOT OPERATE., INSPECTION, Power Seat System.>	• POWER SEAT SWITCH • LUMBAR SWITCH • Power seat harness • Body harness
A part of function does not operate. <Ref. to SE-58, SOME MOTORS DO NOT OPERATE., INSPECTION, Power Seat System.>	• POWER SEAT SWITCH • LUMBAR SWITCH • Power seat harness • Relevant motor

3. CHECK POWER SEAT SWITCH

Measure resistance between terminals while operating each switch.

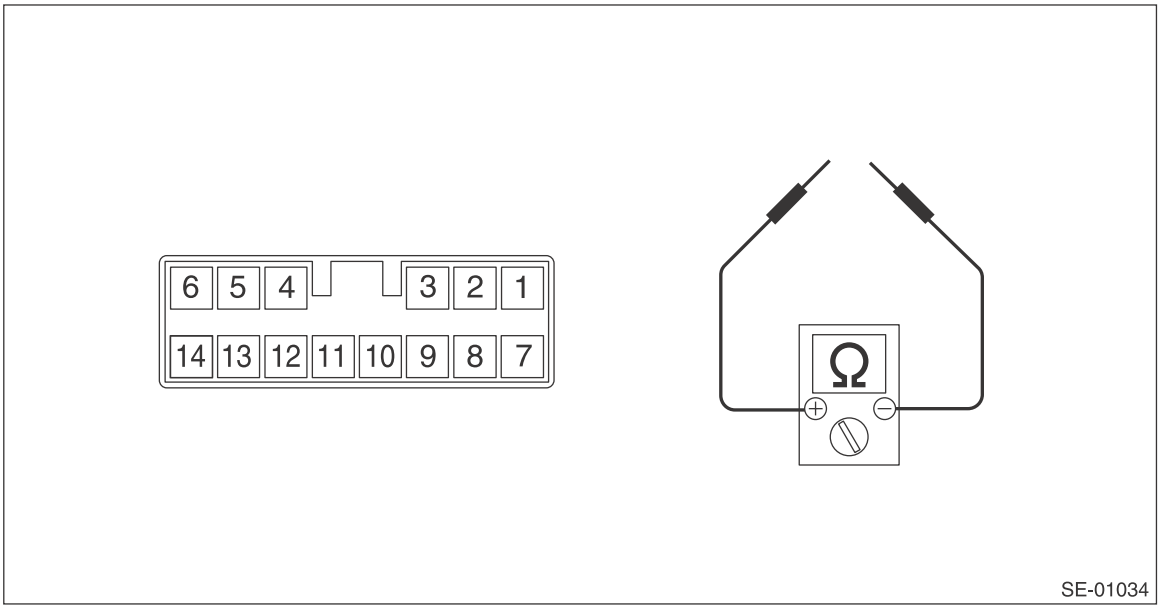

- Driver’s side

Switch position	Terminal No.	Specification
Slide forward	7 and 14 8 and 13	Less than 10 Ω
Slide rearward	7 and 13 8 and 14	Less than 10 Ω
Tilt up	7 and 2 8 and 1	Less than 10 Ω
Tilt down	7 and 1 8 and 2	Less than 10 Ω
Lifter up	7 and 5 8 and 6	Less than 10 Ω
Lifter down	7 and 6 8 and 5	Less than 10 Ω
Reclining forward	7 and 3 8 and 4	Less than 10 Ω
Reclining rearward	7 and 4 8 and 3	Less than 10 Ω

- Passenger's side

Switch position	Terminal No.	Specification
Slide forward	7 and 13 8 and 14	Less than 10 Ω
Slide rearward	7 and 14 8 and 13	Less than 10 Ω
Reclining forward	7 and 4 8 and 3	Less than 10 Ω
Reclining rearward	7 and 3 8 and 4	Less than 10 Ω

Replace the switch if the inspection result is not within the standard value.

4. CHECK LUMBAR SWITCH

Measure resistance between terminals while operating each switch.

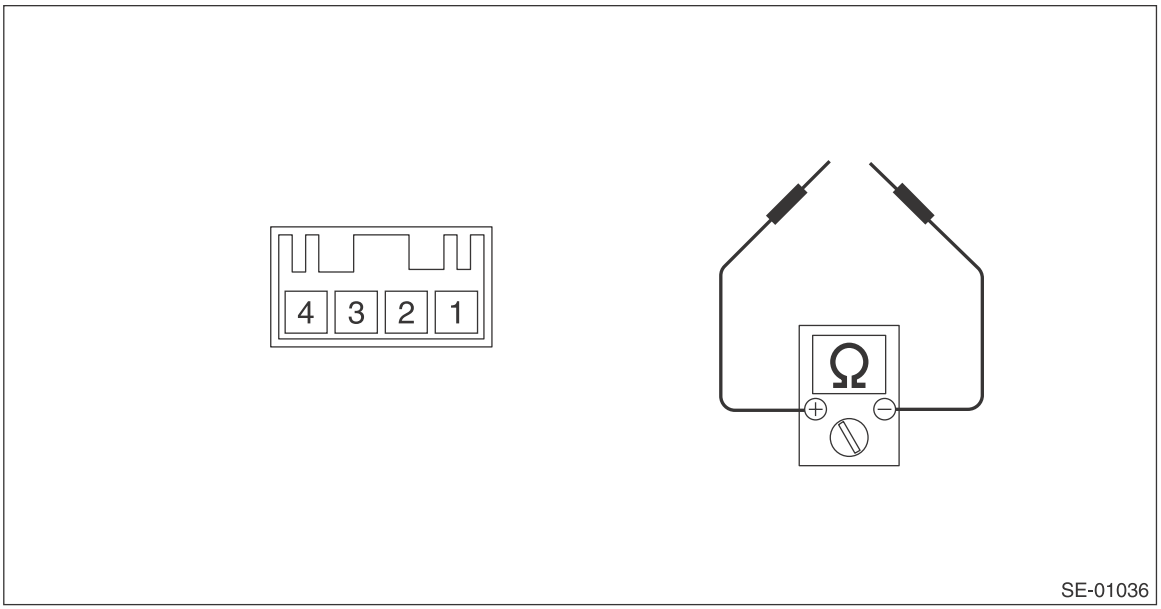

Switch position	Terminal No.	Specification
Lumbar forward	1 and 4 2 and 3	Less than 10 Ω
Lumber rearward	1 and 3 2 and 4	Less than 10 Ω

Replace the switch if the inspection result is not within the standard value.

5. ALL FUNCTIONS DO NOT OPERATE.

	Step	Check	Yes	No
1	**CHECK SEAT FUNCTIONS.** Operate each power seat switch and check that each power seat function operates normally.	Does all function fail to operate?	Go to step **2**.	Check motors that do not operate. <Ref. to SE-58, SOME MOTORS DO NOT OPERATE., INSPECTION, Power Seat System.>
2	**CHECK FUSE.** Check the power seat fuse inside the fuse box.	Is the fuse blown out?	Replace the appropriate fuse.	Go to step **3**.
3	**CHECK POWER SUPPLY CIRCUIT.** 1) Disconnect the connector of power seat switch assembly. 2) Measure the voltage between harness connector and chassis ground. ***Connector & terminal*** ***Driver's side*** ***(R369) No. 7 (+) — Chassis ground (–):*** ***Passenger's side*** ***(R190) No. 7 (+) — Chassis ground (–):***	Is the voltage 10 V or more?	Go to step **4**.	Check body harness.
4	**CHECK POWER SUPPLY CIRCUIT.** Measure the resistance between power seat switch harness connector and chassis ground. ***Connector & terminal*** ***Driver's side*** ***(R369) No. 8 — Chassis ground:*** ***Passenger's side*** ***(R190) No. 8 — Chassis ground:***	Is the resistance less than 10 Ω?	Replace the power seat switch assembly.	Check body harness.

6. SOME MOTORS DO NOT OPERATE.

- Malfunction of slide operation

	Step	Check	Yes	No
1	**CHECK SWITCH.** 1) Disconnect the connector of power seat switch assembly. 2) Measure resistance between terminals while moving the switch to slide forward and slide rearward positions. <Ref. to SE-56, CHECK POWER SEAT SWITCH, INSPECTION, Power Seat System.>	Is there any problem on the inspection result?	Go to step **2**.	Replace the power seat switch assembly.
2	**CHECK HARNESS.** 1) Disconnect the power seat switch connector and slide motor connector. 2) Measure the resistance between power seat switch connector and slide motor connector. ***Connector & terminal*** ***Driver's side*** ***(R370) No. 2 — (R369) No. 13:*** ***(R370) No. 1 — (R369) No. 14:*** ***Passenger's side*** ***(R192) No. 2 — (R190) No. 13:*** ***(R192) No. 1 — (R190) No. 14:***	Is the resistance less than 10 Ω?	Go to step **3**.	Check power seat harness.

	Step	Check	Yes	No
3	**CHECK SLIDE MOTOR.** 1) Connect the power seat switch connector and slide motor connector. 2) Apply 12 V to the slide motor and check the motor rotation. ***Connector & terminal*** ***Driver's side*** ***(R369) No. 13 (+) — (R369) No. 14 (–):*** ***(R369) No. 14 (+) — (R369) No. 13 (–):*** ***Passenger's side*** ***(R190) No. 13 (+) — (R190) No. 14 (–):*** ***(R190) No. 14 (+) — (R190) No. 13 (–):***	Does the motor rotate normally?	Check for temporary poor contact or mechanical trouble in slide rail.	Slide motor problem. Replace the seat cushion frame assembly.

- Malfunction of tilt operation

	Step	Check	Yes	No
1	**CHECK SWITCH.** 1) Disconnect the connector of power seat switch assembly. 2) Measure resistance between terminals while moving the switch to tilt up and tilt down positions. <Ref. to SE-56, CHECK POWER SEAT SWITCH, INSPECTION, Power Seat System.>	Is there any problem on the inspection result?	Go to step **2**.	Replace the power seat switch assembly.
2	**CHECK HARNESS.** 1) Disconnect the power seat switch connector and tilt motor connector. 2) Measure the resistance between power seat switch connector and tilt motor connector. ***Connector & terminal*** ***Driver's side*** ***(R372) No. 2 — (R369) No. 1:*** ***(R372) No. 1 — (R369) No. 2:***	Is the resistance less than 10 Ω?	Go to step **3**.	Check power seat harness.
3	**CHECK TILT MOTOR.** 1) Connect the power seat switch connector and tilt motor connector. 2) Apply 12 V to the tilt motor and check the motor rotation. ***Connector & terminal*** ***Driver's side*** ***(R369) No. 1 (+) — (R369) No. 2 (–):*** ***(R369) No. 2 (+) — (R369) No. 1 (–):***	Does the motor rotate normally?	Check for temporary poor contact or mechanical trouble in tilt mechanism.	Tilt motor problem. Replace the seat cushion frame assembly.

- Malfunction of lifter operation

Step		Check	Yes	No
1	**CHECK SWITCH.** 1) Disconnect the connector of power seat switch assembly. 2) Measure resistance between terminals while moving the switch to lifter up and lifter down positions. <Ref. to SE-56, CHECK POWER SEAT SWITCH, INSPECTION, Power Seat System.>	Is there any problem on the inspection result?	Go to step **2**.	Replace the power seat switch assembly.
2	**CHECK HARNESS.** 1) Disconnect the power seat switch connector and lifter motor connector. 2) Measure the resistance between power seat switch connector and lifter motor connector. ***Connector & terminal*** ***Driver's side*** ***(R371) No. 2 — (R369) No. 6:*** ***(R371) No. 1 — (R369) No. 5:***	Is the resistance less than 10 Ω?	Go to step **3**.	Check power seat harness.
3	**CHECK LIFTER MOTOR.** 1) Connect the power seat switch connector and lifter motor connector. 2) Apply 12 V to the lifter motor and check the motor rotation. ***Connector & terminal*** ***Driver's side*** ***(R369) No. 6 (+) — (R369) No. 5 (–):*** ***(R369) No. 5 (+) — (R369) No. 6 (–):***	Does the motor rotate normally?	Check for temporary poor contact or mechanical trouble in lifter mechanism.	Lifter motor problem. Replace the seat cushion frame assembly.

- Malfunction of reclining operation

Step		Check	Yes	No
1	**CHECK SWITCH.** 1) Disconnect the connector of power seat switch assembly. 2) Measure resistance between terminals while moving the switch to reclining forward and reclining rearward positions. <Ref. to SE-56, CHECK POWER SEAT SWITCH, INSPECTION, Power Seat System.>	Is there any problem on the inspection result?	Go to step **2**.	Replace the power seat switch assembly.
2	**CHECK HARNESS.** 1) Disconnect the power seat switch connector and reclining motor connector. 2) Measure the resistance between power seat switch connector and reclining motor connector. ***Connector & terminal*** ***Driver's side*** ***(R375) No. 2 — (R369) No. 4:*** ***(R375) No. 1 — (R369) No. 3:*** ***Passenger's side*** ***(R368) No. 2 — (R190) No. 3:*** ***(R368) No. 1 — (R190) No. 4:***	Is the resistance less than 10 Ω?	Go to step **3**.	Check power seat harness.
3	**CHECK RECLINING MOTOR.** 1) Connect the power seat switch connector and reclining motor connector. 2) Apply 12 V to the reclining motor and check the motor rotation. ***Connector & terminal*** ***Driver's side*** ***(R369) No. 4 (+) — (R369) No. 3 (–):*** ***(R369) No. 3 (+) — (R369) No. 4 (–):*** ***Passenger's side*** ***(R190) No. 4 (+) — (R190) No. 3 (–):*** ***(R190) No. 3 (+) — (R190) No. 4 (–):***	Does the motor rotate normally?	Check for temporary poor contact or mechanical trouble in reclining hinge.	Reclining motor problem. Replace the backrest frame assembly.

- Malfunction of lumbar operation

	Step	Check	Yes	No
1	**CHECK SWITCH.** 1) Disconnect the connector of lumbar switch assembly. 2) Measure resistance between terminals while moving the switch to lumbar forward and lumbar rearward positions. <Ref. to SE-57, CHECK LUMBAR SWITCH, INSPECTION, Power Seat System.>	Is there any problem on the inspection result?	Go to step **2**.	Replace the lumbar switch assembly.
2	**CHECK HARNESS.** 1) Disconnect the lumbar switch connector and lumbar motor connector. 2) Measure the resistance between lumbar switch connector and lumbar motor connector. ***Connector & terminal*** ***Driver's side*** ***(R379) No. 1 — (R376) No. 4:*** ***(R379) No. 2 — (R376) No. 3:***	Is the resistance less than 10 Ω?	Go to step **3**.	Check power seat harness.
3	**CHECK LUMBAR MOTOR.** 1) Connect the lumbar switch connector and lumbar motor connector. 2) Apply 12 V to the lumbar motor and check the motor rotation. ***Connector & terminal*** ***Driver's side*** ***(R376) No. 4 (+) — (R376) No. 3 (–):*** ***(R376) No. 3 (+) — (R376) No. 4 (–):***	Does the motor rotate normally?	Check for temporary poor contact or mechanical trouble in lumbar mechanism.	Lumbar motor problem. Replace the backrest frame assembly.

5. Seat Heater System

A: REMOVAL

1. SEAT HEATER UNIT

1) Remove the front seats. <Ref. to SE-10, REMOVAL, Front Seat.>
2) Remove the backrest cover of front seat and seat cushion cover. <Ref. to SE-12, DISASSEMBLY, Front Seat.>
3) Remove the seat heater unit.

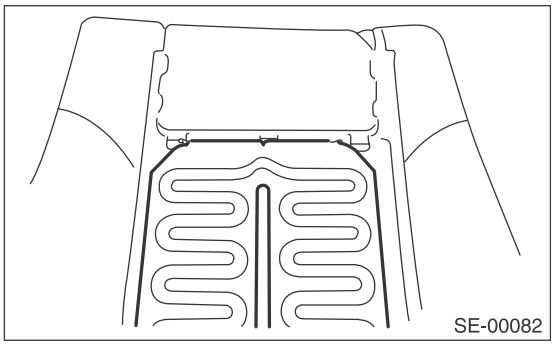

2. SEAT HEATER SWITCH

1) Disconnect the ground cable from battery.
2) Remove the console front cover assembly.

- MT model
  1. Remove the shift knob.
  2. Release the clips and claws, then pull up the console front cover assembly.

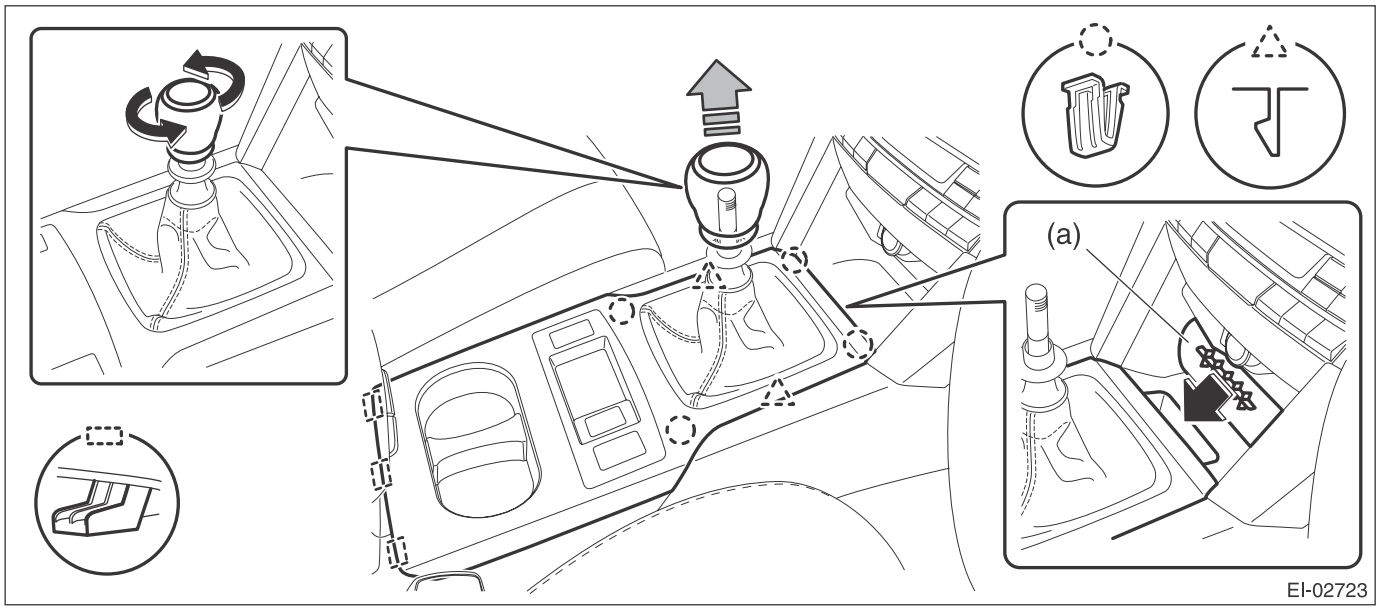

NOTE:
Turn over the front center pocket mat (a) and pull up the console front cover from the slit.

  3. Disconnect the harness connector and remove the console front cover assembly.

- AT model
  1. Remove the select lever knob.
     a. Lower the cover grip AT.
     b. Remove the clamp grip pin, then remove the select lever knob.
  2. Release the clips and claws, then pull up the console front cover assembly.

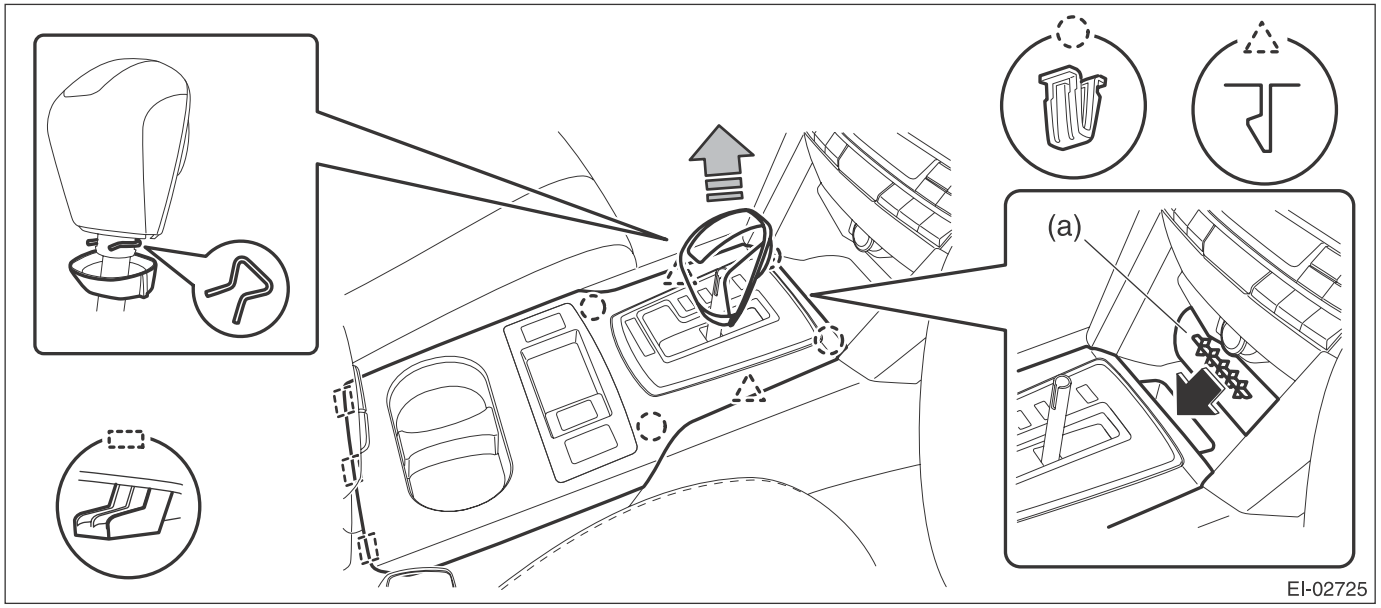

NOTE:
Turn over the front center pocket mat (a) and pull up the console front cover from the slit.

  3. Disconnect the harness connector and remove the console front cover assembly.

3) Release the claws and remove the seat heater switch from the back of console front cover.

3. SEAT HEATER RELAY AND FUSE

1) Disconnect the ground cable from battery.
2) Remove the clips, and remove the instrument panel side cover LH.

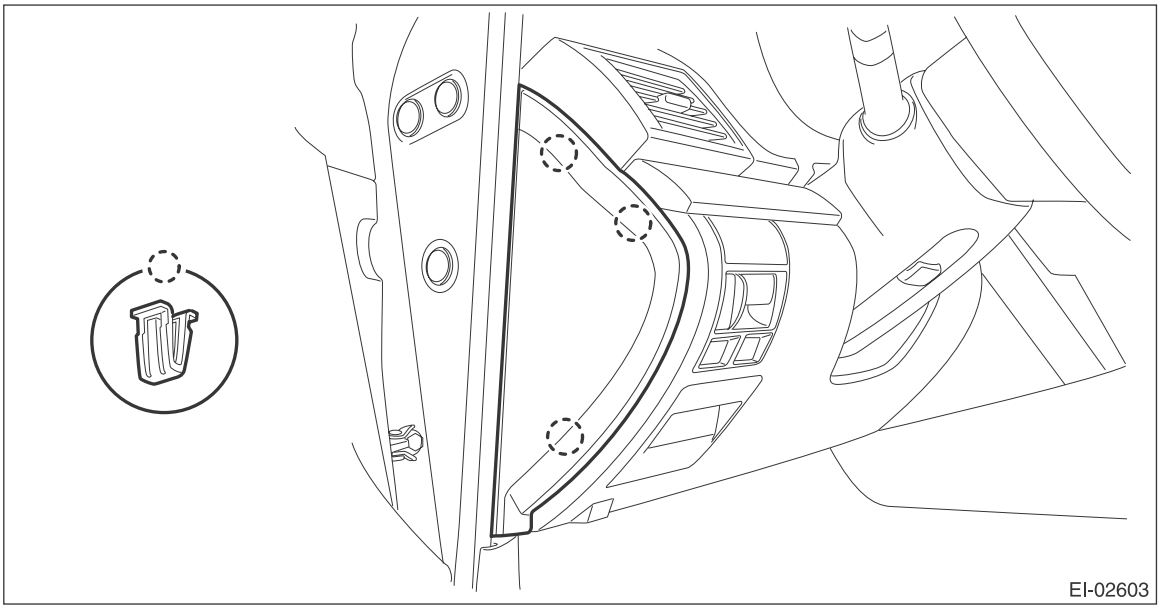

3) Remove the instrument panel lower cover.

(1) Remove the clips and data link connector, and remove the instrument panel lower cover under.

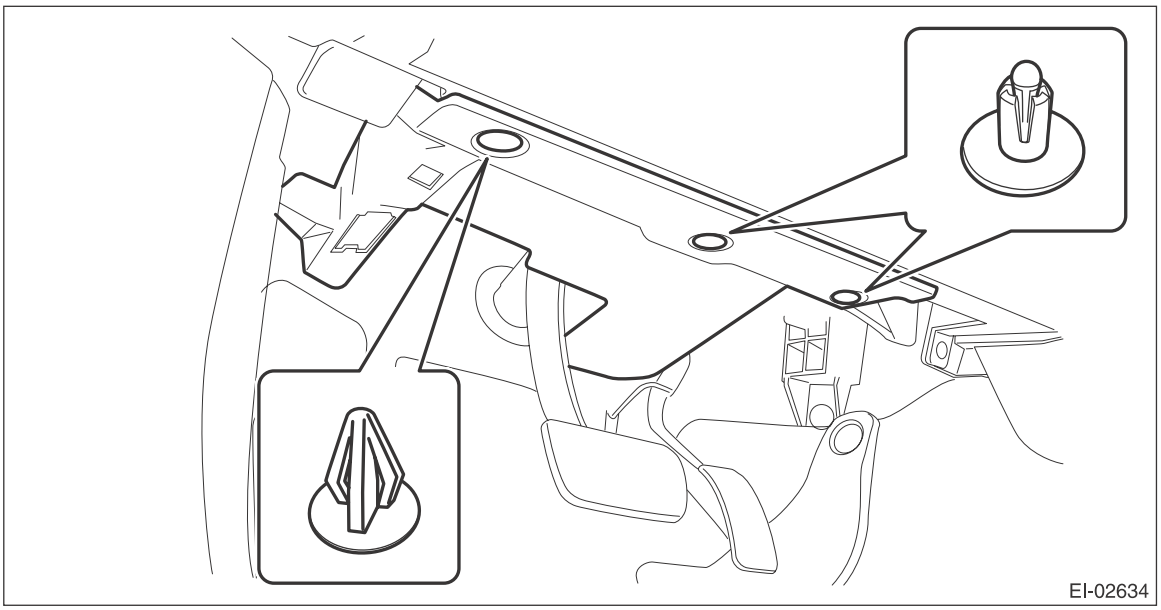

(2) Remove the screws and clips and release the claws, and remove the instrument panel lower cover while disconnecting the harness connectors.

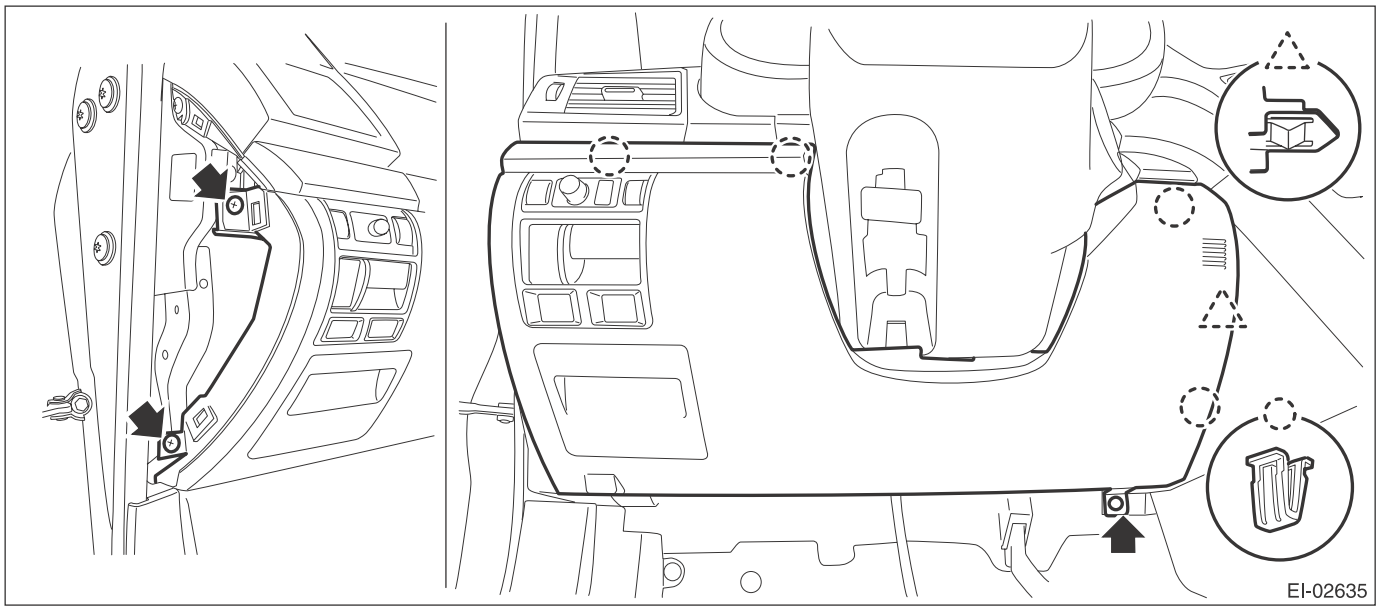

4) Remove the seat heater relay and fuse.
(1) Remove the joint box bolts.

(2) Remove the seat heater relay

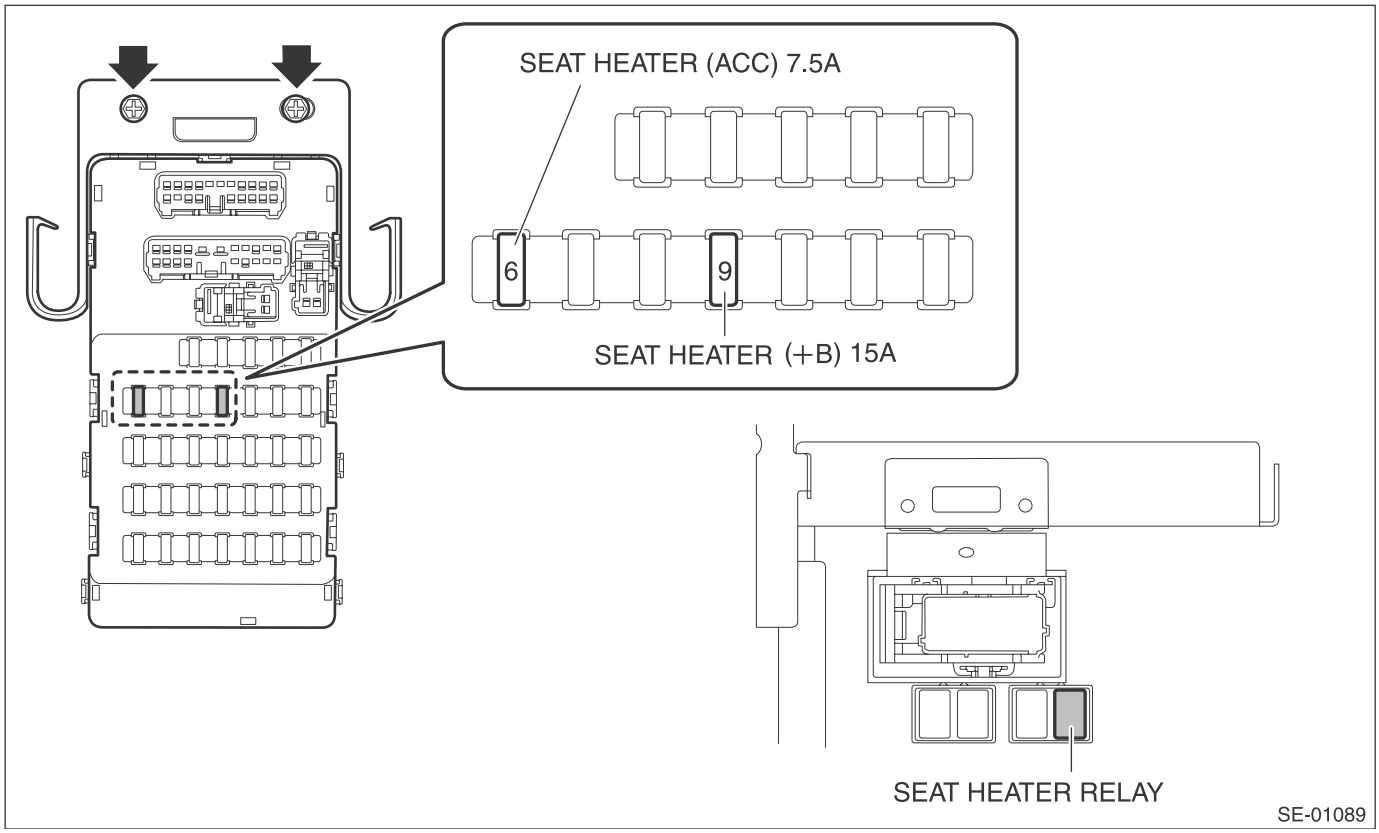

B: INSTALLATION

Install each part in the reverse order of removal.

C: INSPECTION

1. WIRING DIAGRAM

Refer to “Seat Heater System” in the wiring diagram. <Ref. to WI-207, WIRING DIAGRAM, Seat Heater System.>

2. DIAGNOSTIC CHART

Symptoms	Repair order
Seat heater does not operate.	1. Check the fuse. <Ref. to SE-66, CHECK SEAT HEATER FUSE, INSPECTION, Seat Heater System.>
	2. Check the seat heater relay. <Ref. to SE-67, CHECK SEAT HEATER RELAY, INSPECTION, Seat Heater System.>
	3. Check the seat heater switch. <Ref. to SE-67, CHECK SEAT HEATER SWITCH, INSPECTION, Seat Heater System.>
	4. Check the power supply and ground circuit for the seat heater system. <Ref. to SE-67, CHECK POWER SUPPLY AND GROUND CIRCUIT, INSPECTION, Seat Heater System.>

3. CHECK SEAT HEATER FUSE

Remove the seat heater fuse and inspect visually.
Is the fuse blown out?

- **Yes** → Replace the fuse.
- **No** → Check the power supply and ground circuits.

4. CHECK SEAT HEATER RELAY

1) Remove the seat heater relay from the relay holder.
2) Measure the resistance between seat heater relay terminals.

Preparation tool: Circuit tester

Terminal No.	Inspection conditions	Specification	Circuit
11 — 10	Always	1 MΩ or more	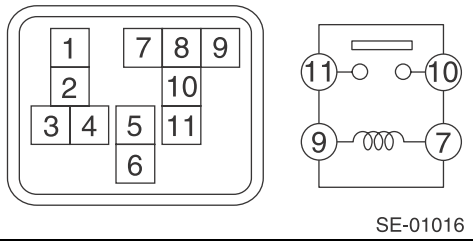
11 — 10	Apply battery voltage between terminals 9 — 7.	Less than 1 Ω	

3) Replace the seat heater relay if the inspection result is not within the standard value.

5. CHECK SEAT HEATER SWITCH

1) CHECK SEAT HEATER SWITCH
   (1) Turn the ignition switch to ON.
   (2) Measure the voltage between the seat heater switch and chassis ground when turning the switch to a position other than OFF.

Connector & terminal
LHD side seat
(R42) No. 4 (+) — Chassis ground (–):
RHD side seat
(R45) No. 4 (+) — Chassis ground (–):
Does the voltage fluctuate between 12 V ←→ 0 V?
- **Yes** → Harness faulty, open circuit of heater or thermostat faulty.
- **No** → Replace the seat heater switch.

6. CHECK POWER SUPPLY AND GROUND CIRCUIT

1) CHECK POWER SUPPLY CIRCUIT.
   (1) Disconnect the seat heater switch.
   (2) Turn the ignition switch to ON.
   (3) Measure the voltage between harness connector terminal and chassis ground.

Connector & terminal
Driver's side
(R42) No. 4 (+) — Chassis ground (–):
Passenger's side
(R45) No. 4 (+) — Chassis ground (–):
Is the voltage 12 V or more?
- **Yes** → Go to step 2.
- **No** → Check the harness between the seat heater switch and fuse.

2) CHECK GROUND CIRCUIT.
Measure the resistance between harness connector terminal and chassis ground.

Connector & terminal
Driver seat (manual seat)
(R42) No. 6 — Chassis ground:
(R41) No. 1 — Chassis ground:
Passenger seat (manual seat)
(R45) No. 6 — Chassis ground:
(R44) No. 1 — Chassis ground:
Driver seat (power seat)
(R42) No. 6 — Chassis ground:
(R380) No. 1 — Chassis ground:
Passenger seat (power seat)
(R45) No. 6 — Chassis ground:
(R363) No. 1 — Chassis ground:
Is the resistance less than 10 Ω?
- **Yes** → The power supply and ground circuits are normal.
- **No** → Repair the harness.

SECURITY AND LOCKS

SL

		Page
1.	General Description	2
2.	Relay and Fuse	8
3.	Door Lock Control System	9
4.	Keyless Entry System	15
5.	Security System	27
6.	Front Inner Remote	31
7.	Front Outer Handle	32
8.	Front Door Latch and Door Lock Actuator Assembly	35
9.	Rear Inner Remote	38
10.	Rear Outer Handle	39
11.	Rear Door Latch and Door Lock Actuator Assembly	42
12.	Rear Gate Opener Button	44
13.	Trunk Opener Switch	46
14.	Rear Gate Latch and Actuator Assembly	48
15.	Trunk Lid Latch and Actuator Assembly	50
16.	Front Hood Lock Assembly	52
17.	Remote Openers	55
18.	Ignition Key Lock	59
19.	Key Lock Cylinders	61
20.	Security Control Module	66
21.	Impact Sensor	67
22.	Keyless Entry Control Module	69
23.	Keyless Buzzer	71
24.	Body Integrated Unit	72
25.	Keyless Transmitter	73
26.	Transmitter	76
27.	Immobilizer Control Module	79
28.	Immobilizer Antenna	80

1. General Description

A: COMPONENT

1. DOOR LOCK ASSEMBLY

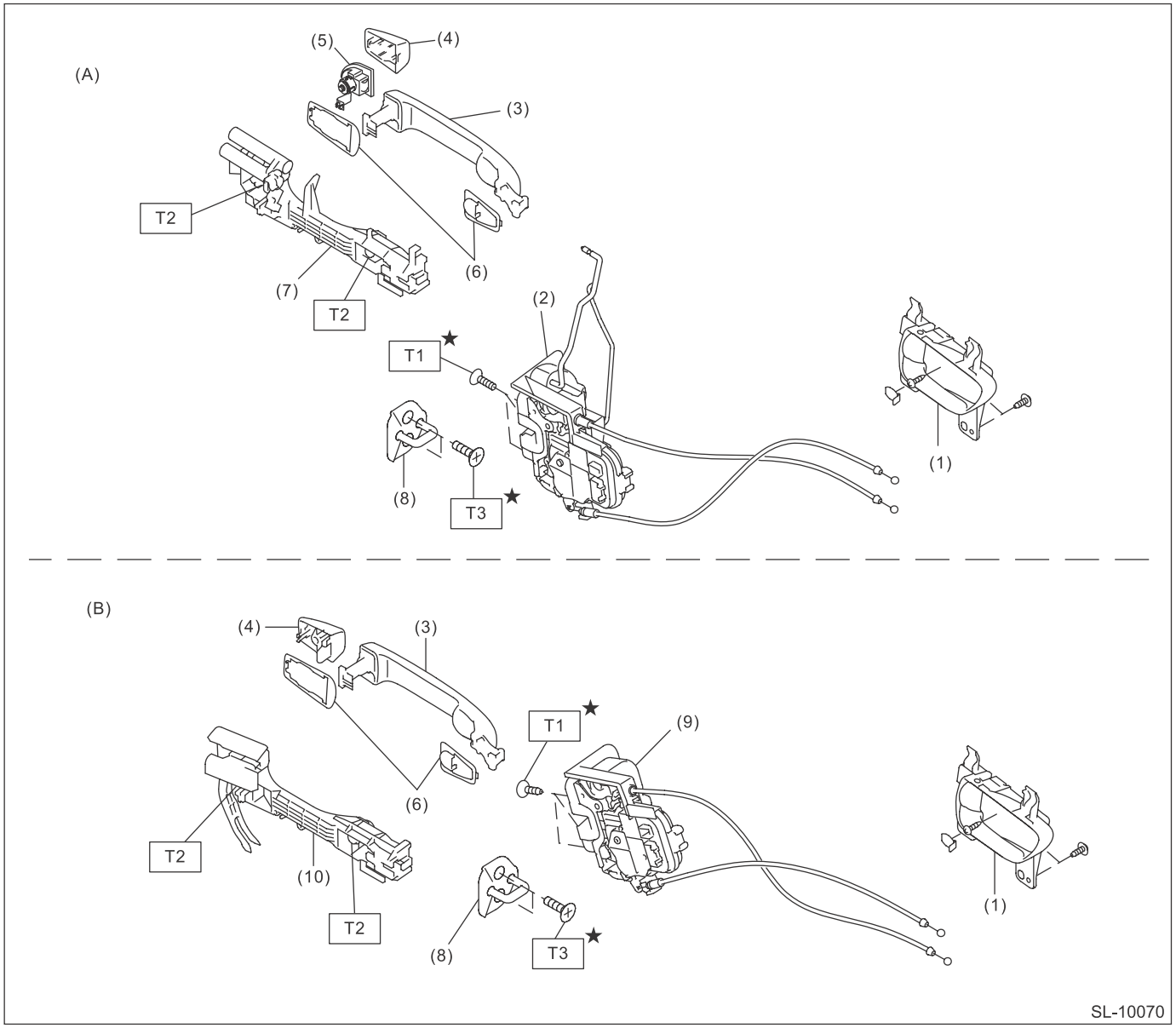

(A)	Front	(B)	Rear
(1)	Inner remote ASSY	(6)	Door outer handle spacer
(2)	Front door latch and door lock actuator ASSY	(7)	Front door outer handle frame ASSY
(3)	Door outer handle	(8)	Striker
(4)	Door outer handle cover	(9)	Rear door latch and door lock actuator ASSY
(5)	Key cylinder (driver's seat side only)	(10)	Rear door outer handle frame ASSY

Tightening torque:N·m (kgf-m, ft-lb)
T1: 6.5 (0.66, 4.8)
T2: 7.5 (0.76, 5.5)
T3: 18 (1.8, 13.3)

2. REAR GATE LOCK AND TRUNK LID LOCK

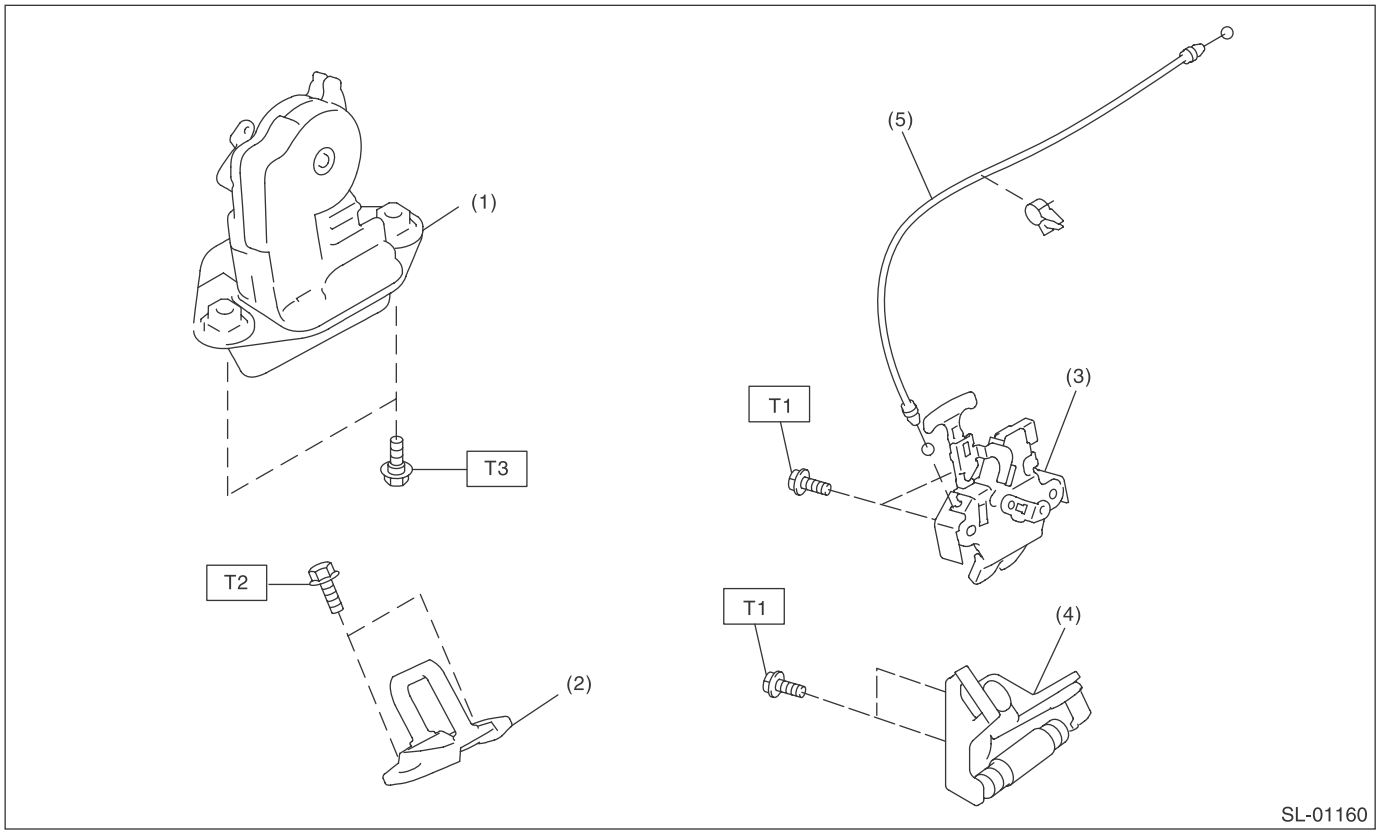

(1) Rear gate latch & actuator ASSY
(2) Rear gate striker
(3) Trunk lid latch & actuator ASSY
(4) Trunk lid striker
(5) Cable

Tightening torque:N·m (kgf-m, ft-lb)
T1: 7.5 (0.76, 5.5)
T2: 25 (2.5, 18.4)
T3: 18 (1.8, 13.3)

3. FRONT HOOD LOCK AND REMOTE OPENERS

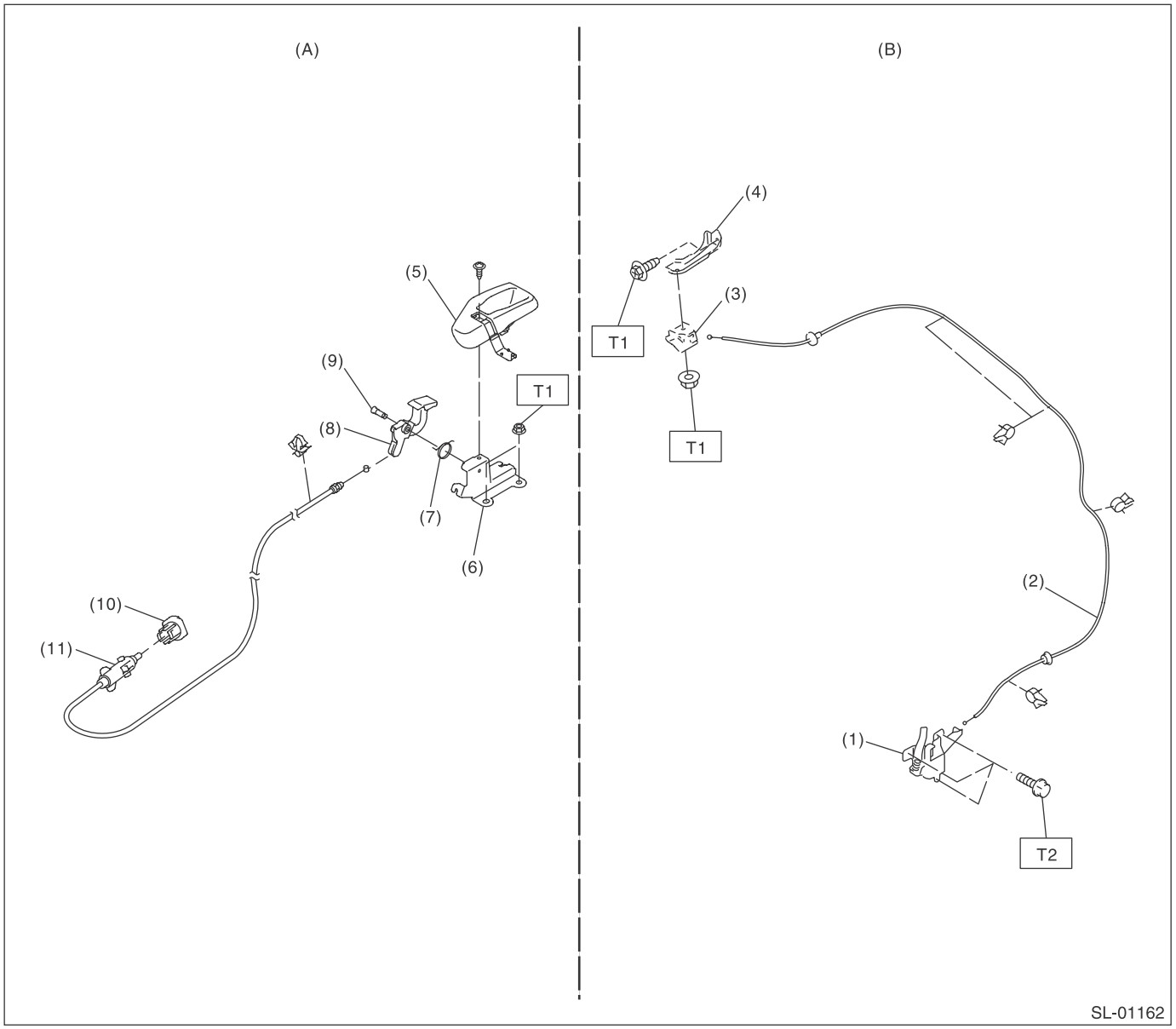

(A)	Fuel lock release	(B)	Hood lock release		
(1)	Front hood lock ASSY	(6)	Bracket	(11)	Fuel lock
(2)	Cable	(7)	Spring		
(3)	Lever ASSY	(8)	Pull handle ASSY	***Tightening torque:N·m (kgf-m, ft-lb)***	
(4)	Bracket	(9)	Pin	***T1:***	***7.5 (0.76, 5.5)***
(5)	Cover	(10)	Holder	***T2:***	***33 (3.36, 24.3)***

4. KEYLESS ENTRY SYSTEM

NOTE:
Except for model with keyless access

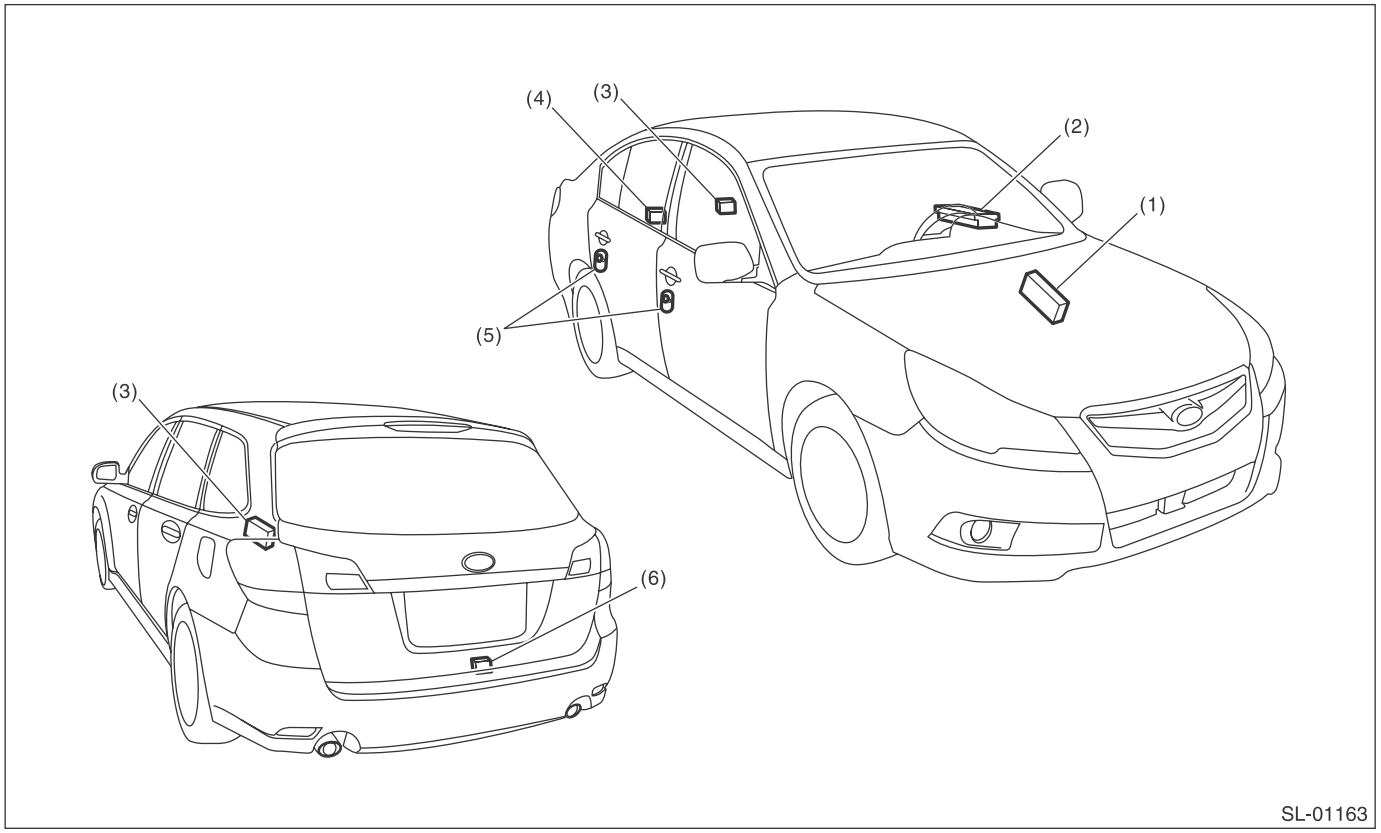

(1) Body integrated unit
(2) Power window main switch
(3) Keyless entry control module
(4) Trunk lid latch switch (Sedan model)
(5) Door switch
(6) Rear gate latch switch (OUTBACK model)

5. SECURITY SYSTEM

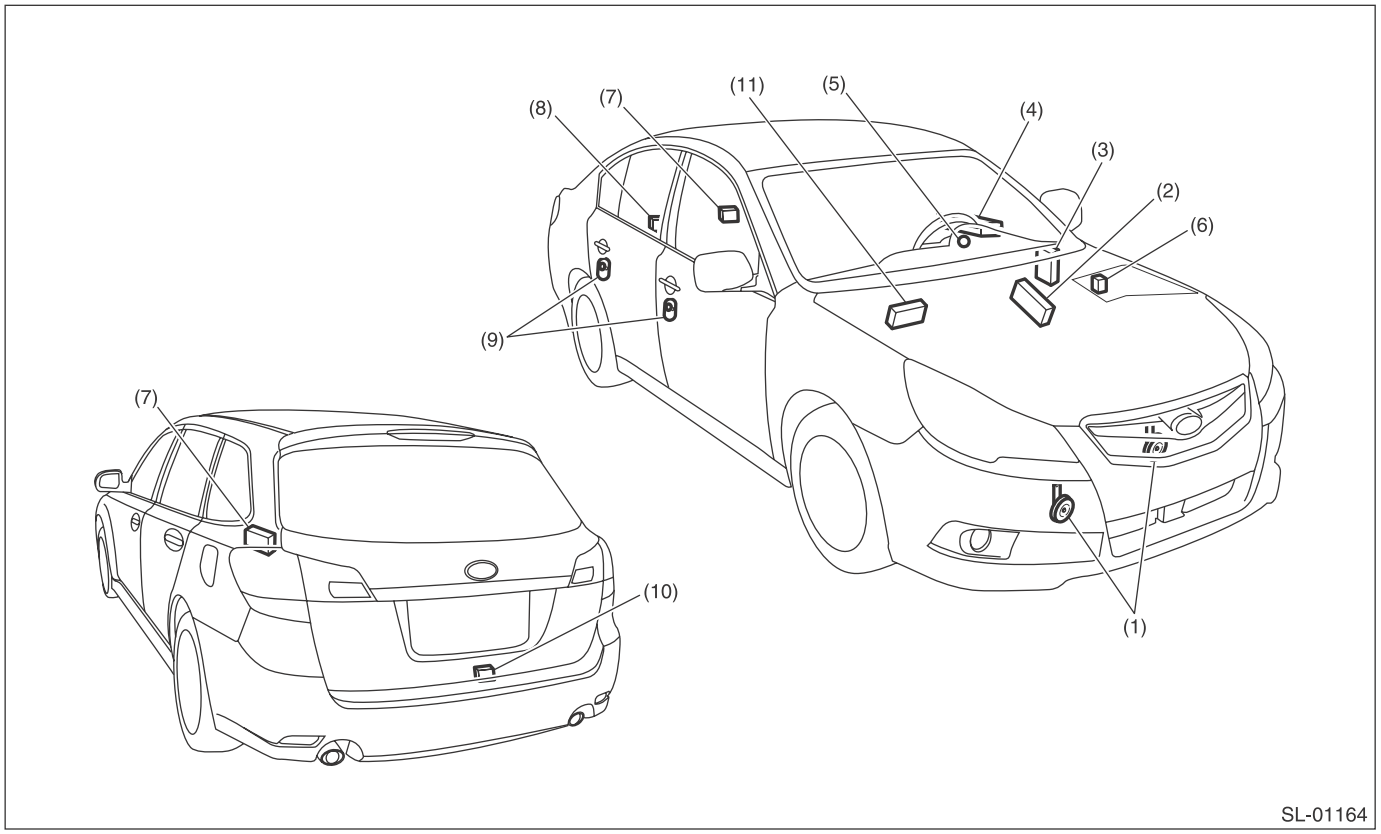

(1)	Horn	(5)	Security indicator light (in combination meter)	(9)	Door switch
(2)	Body integrated unit	(6)	Horn relay (in man fuse box)	(10)	Rear gate latch switch (OUTBACK model)
(3)	Impact sensor (Instrument panel side end on driver's side) (dealer option)	(7)	Keyless entry control module	(11)	Security control module (C0, C5 model)
(4)	Power window main switch	(8)	Trunk lid latch switch (Sedan model)		

B: CAUTION

- Before disassembling or reassembling parts, always disconnect the battery ground cable from battery. When replacing the control module and other parts provided with memory functions, record the memory contents before disconnecting the battery ground cable. Otherwise, the memory is cleared.
- After disconnecting the battery or after restoring from a dead battery condition, turn the ignition to ON and OFF, and perform after opening and closing the driver's side door a few times.
- Reassemble the parts in the reverse order of disassembly procedure unless otherwise indicated.
- Connect the connectors securely when reassembling.
- After reassembly, make sure that all functional parts operate normally.
- If any immobilizer related part has been replaced, make sure to register the immobilizer.
- Do not use any electrical test equipment on the airbag system wiring harnesses and connector circuits.
- Be careful not to damage the airbag system wiring harness when servicing the ignition key cylinder.

C: PREPARATION TOOL

1. SPECIAL TOOL

ILLUSTRATION	TOOL NUMBER	DESCRIPTION	REMARKS
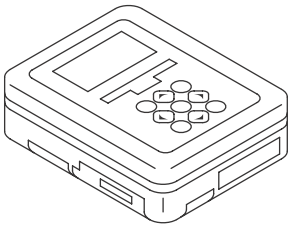 ST1B022XU0	1B022XU0	SUBARU SELECT MONITOR III KIT	Used for troubleshooting the electrical system.

2. GENERAL TOOL

TOOL NAME	REMARKS
Circuit tester	Used for measuring resistance and voltage.
Drill	Used for replacing the ignition key lock and steering lock CM.
TORX® T30	Used for removing and installing door outer handle.
Clip remover	Used for removing trim clip.

2. Relay and Fuse

A: LOCATION

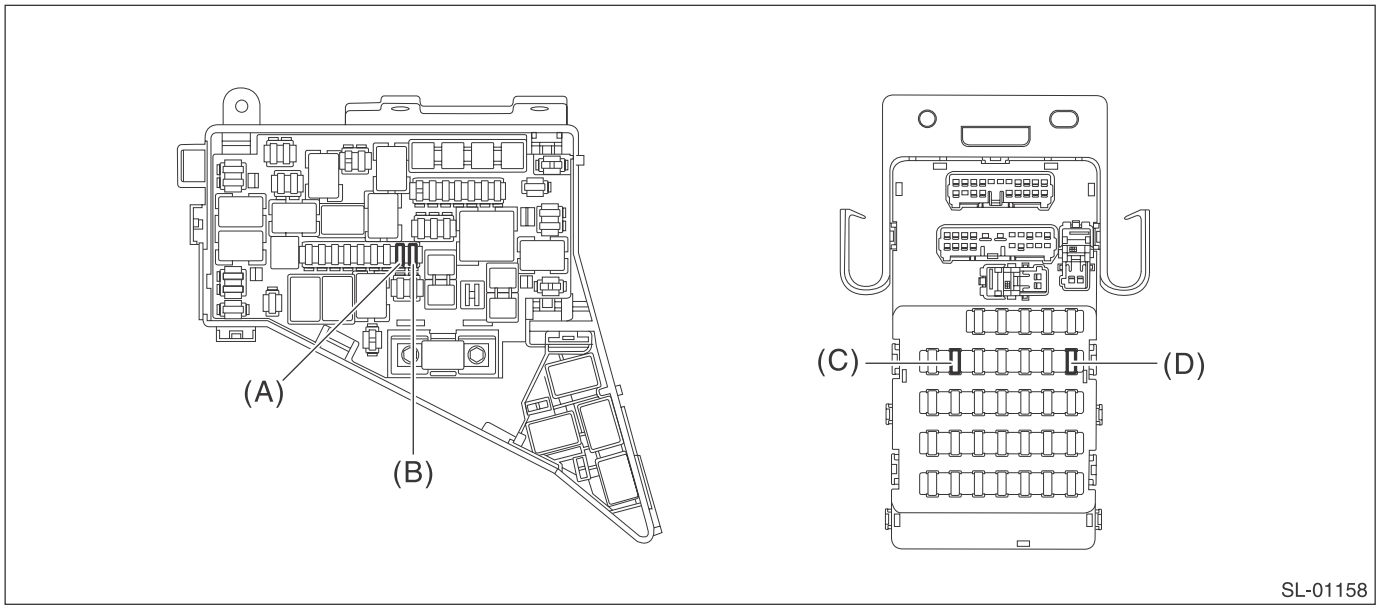

Main Fuse Box	Fuse 15A (K/L)	(A)
	Fuse 20A (K/L, SEC)	(B)
Relay & fuse box	Fuse 7.5A (SEC)	(C)
	Fuse 15A (SEC)	(D)

B: INSPECTION

1. CHECK FUSE.

1) Remove the fuse and check visually.
2) If the fuse is blown out, replace the fuse.

3. Door Lock Control System

A: WIRING DIAGRAM

Refer to “Keyless Entry System” in the wiring diagram. <Ref. to WI-163, WIRING DIAGRAM, Keyless Entry System.>

B: ELECTRICAL SPECIFICATION

1. BODY INTEGRATED UNIT

Refer to the Control Module I/O Signal of the BODY CONTROL SYSTEM (DIAGNOSIS). <Ref. to BC(diag)-7, ELECTRICAL SPECIFICATION, Control Module I/O Signal.>

C: INSPECTION

1. SYMPTOM CHART

Symptoms	Repair order	Reference
The door lock control system does not operate.	1. Remove and visually check the following fuses. • No. 7 (in fuse & relay box) • No. 10 (in main fuse box) • No. 19 (in main fuse box)	If the fuse is blown out, replace the fuse with a new part. When there is no defective with the fuse, check the power supply and ground circuit. <Ref. to SL-10, CHECK POWER SUPPLY AND GROUND CIRCUIT, INSPECTION, Door Lock Control System.>
	2. Check the power supply and ground circuit for body integrated unit.	<Ref. to SL-10, CHECK POWER SUPPLY AND GROUND CIRCUIT, INSPECTION, Door Lock Control System.>
	3. Check the door lock switch and the circuit.	<Ref. to SL-11, CHECK DOOR LOCK SWITCH, INSPECTION, Door Lock Control System.>
	4. Check the rear gate/trunk opener button and the circuit.	<Ref. to SL-12, CHECK REAR GATE/TRUNK OPENER BUTTON SWITCH CIRCUIT, INSPECTION, Door Lock Control System.>
	5. Check the door lock actuator and the circuit.	<Ref. to SL-13, CHECK DOOR LOCK ACTUATOR AND CIRCUIT., INSPECTION, Door Lock Control System.>
A specific door lock actuator does not operate.	Check the door lock actuator and circuit.	<Ref. to SL-13, CHECK DOOR LOCK ACTUATOR AND CIRCUIT., INSPECTION, Door Lock Control System.>

2. CHECK POWER SUPPLY AND GROUND CIRCUIT

	Step	Check	Yes	No
1	**CHECK POWER SUPPLY.** 1) Disconnect the connector of body integrated unit. 2) Measure the voltage between body integrated unit connector and chassis ground. ***Connector & terminal*** ***(i84) No. 6 (+) — Chassis ground (–):*** ***(i171) No. 1 (+) — Chassis ground (–):*** ***(B281) No. 7 (+) — Chassis ground (–):***	Is the voltage 10 V or more?	Go to step **2**.	Check the harness for open or short circuit between body integrated unit and fuse.
2	**CHECK GROUND CIRCUIT.** Measure the resistance between body integrated unit connector and chassis ground. ***Connector & terminal*** ***(i84) No. 1 — Chassis ground:*** ***(i171) No. 29 — Chassis ground:*** ***(B280) No. 1 — Chassis ground:*** ***(B281) No. 31 — Chassis ground:***	Is the resistance less than 10 Ω?	The power supply and ground circuit are OK.	Repair or replace the harness.

3. CHECK DOOR LOCK SWITCH

	Step	Check	Yes	No
1	**CHECK DOOR LOCK SWITCH.** 1) Prepare the Subaru Select Monitor kit. 2) Turn the ignition switch to ON (engine OFF) and run the "PC application for Subaru Select Monitor". 3) On «System Selection Menu» display, select {Integ. unit mode}. 4) Select the {Current Data Display & Save}. 5) Select the {Manual lock SW input}.	Does the display switch between OFF ←→ ON when each door lock switch is moved to LOCK?	Go to step **2**.	Go to step **3**.
2	**CHECK DOOR LOCK SWITCH.** From the condition in step 1), operate each door lock switch in the UNLOCK direction.	Does the display switch between OFF ←→ ON?	The door lock switch is OK.	Go to step **4**.
3	**CHECK DOOR LOCK SWITCH.** 1) Disconnect the door lock switch connector. 2) Check the continuity when the door lock switch is operated to the LOCK direction. ***Connector & terminal*** ***Driver's side (model without AUTO UP function)*** ***(D7) No. 2 — (D7) No. 3:*** ***Driver's side (model with AUTO UP function)*** ***(D95) No. 10 — (D7) No. 3:*** ***Passenger's side*** ***(D125) No. 4 — (D125) No. 5:***	Did the indicator change from "No continuity" (1 MΩ or more) to "Continuity exists" (less than 10 Ω)?	Go to step **4**.	Replace the power window main switch or door lock switch.
4	**CHECK DOOR LOCK SWITCH.** Check the continuity when the door lock switch is operated to the UNLOCK direction. ***Connector & terminal*** ***Driver's side (model without AUTO UP function)*** ***(D17) No. 1 — (D7) No. 3:*** ***Driver's side (model with AUTO UP function)*** ***(D95) No. 2 — (D7) No. 3:*** ***Passenger's side*** ***(D125) No. 2 — (D125) No. 5:***	Did the indicator change from "No continuity" (1 MΩ or more) to "Continuity exists" (less than 10 Ω)?	Go to step **5**.	Replace the power window main switch or door lock switch.
5	**CHECK HARNESS.** Measure the resistance between the door lock switch connector and chassis ground. ***Connector & terminal*** ***Driver's side*** ***(D7) No. 3 — Chassis ground:*** ***Passenger's side*** ***(D125) No. 5 — Chassis ground:***	Is the resistance less than 10 Ω?	Go to step **6**.	Repair or replace the harness.

	Step	Check	Yes	No
6	**CHECK HARNESS.** 1) Disconnect the connector of body integrated unit. 2) Measure the resistance between body integrated unit connector and door lock switch connector. ***Connector & terminal*** ***Driver's side (model without AUTO UP function)*** ***(D7) No. 2 — (i84) No. 9:*** ***(D7) No. 1 — (i84) No. 20:*** ***Driver's side (model with AUTO UP function)*** ***(D95) No. 10 — (i84) No. 9:*** ***(D95) No. 2 — (i84) No. 20:*** ***Passenger's side*** ***(D125) No. 4 — (i84) No. 9:*** ***(D125) No. 2 — (i84) No. 20:***	Is the resistance less than 10 Ω?	Replace the body integrated unit. <Ref. to SL-72, Body Integrated Unit.>	Repair or replace the harness.

4. CHECK REAR GATE/TRUNK OPENER BUTTON SWITCH CIRCUIT

	Step	Check	Yes	No
1	**CHECK REAR GATE/TRUNK OPENER BUTTON SWITCH.** 1) Prepare the Subaru Select Monitor kit. 2) Turn the ignition switch to ON (engine OFF) and run the "PC application for Subaru Select Monitor". 3) On «System Selection Menu» display, select {Integ. unit mode}. 4) Select the {Current Data Display & Save}. 5) Select the {Rear gate/Trunk release switch}.	Does the display switch between OFF ←→ ON when the rear gate/trunk opener button is operated?	The rear gate/trunk opener button is normal.	Go to step **2**.
2	**CHECK HARNESS.** 1) Disconnect the body integrated unit connector and rear gate/trunk opener button connector. 2) Measure the resistance between body integrated unit connector and rear gate/trunk opener button connector. ***Connector & terminal*** ***Sedan model*** ***(i84) No. 10 — (i162) No. 4:*** ***OUTBACK model*** ***(i84) No. 10 — (D77) No. 5:***	Is the resistance less than 10 Ω?	Go to step **3**.	Repair or replace the harness.
3	**CHECK HARNESS.** Measure the resistance between the rear gate/trunk opener button connector and chassis ground. ***Connector & terminal*** ***Sedan model*** ***(i162) No. 2 — Chassis ground:*** ***OUTBACK model*** ***(D77) No. 6 — Chassis ground:***	Is the resistance less than 10 Ω?	Go to step **4**.	Repair or replace the harness.

	Step	Check	Yes	No
4	**CHECK REAR GATE/TRUNK OPENER BUTTON SWITCH.** Measure the resistance between connector terminals both when the rear gate/trunk opener button is pressed and when not pressed. ***Connector & terminal*** ***Sedan model*** ***(i162) No. 4 — (i162) No. 2:*** ***OUTBACK model*** ***(D77) No. 5 — (D77) No. 6:***	Is the resistance less than 10 Ω when the switch is pressed and 1 MΩ or more when not pressed?	Replace the body integrated unit. <Ref. to SL-72, Body Integrated Unit.>	Replace the rear gate/trunk opener button.

5. CHECK DOOR LOCK ACTUATOR AND CIRCUIT.

	Step	Check	Yes	No
1	**CHECK HARNESS (DOOR LOCK).** 1) Disconnect the body integrated unit connector and each door lock actuator connector. 2) Check the harness between body integrated unit connector and each door lock actuator connector. ***Connector & terminal*** ***Front door RH*** ***(i171) No. 2 — (D72) No. 1:*** ***Front door LH*** ***(i171) No. 2 — (D18) No. 1:*** ***Rear door RH*** ***(i171) No. 2 — (D32) No. 1:*** ***Rear door LH*** ***(i171) No. 2 — (D26) No. 1:***	Is harness normal?	Go to step **2**.	Repair or replace the harness.
2	**CHECK HARNESS (DOOR UNLOCK).** Check the harness between body integrated unit connector and each door lock actuator connector. ***Connector & terminal*** ***Front door RH*** ***(i171) No. 3 — (D72) No. 2:*** ***Front door LH*** ***(i171) No. 4 — (D18) No. 2:*** ***Rear door RH*** ***(i171) No. 3 — (D32) No. 2:*** ***Rear door LH*** ***(i171) No. 3 — (D26) No. 2:***	Is harness normal?	OUTBACK model Go to step **3**. Sedan model:Go to step **5**.	Repair or replace the harness.
3	**CHECK HARNESS (REAR GATE UNLOCK).** Check the harness between body integrated unit connector and rear gate lock actuator connector. ***Connector & terminal*** ***(i171) No. 7 — (D47) No. 1:***	Is harness normal?	Go to step **4**.	Repair or replace the harness.
4	**CHECK HARNESS (REAR GATE UNLOCK).** Measure the resistance between the rear gate lock actuator connector and chassis ground. ***Connector & terminal*** ***(D47) No. 2 — Chassis ground:***	Is the resistance less than 10 Ω?	Go to step **7**.	Repair or replace the harness.
5	**CHECK HARNESS (TRUNK UNLOCK).** Check the harness between body integrated unit connector and trunk lid lock actuator connector. ***Connector & terminal*** ***(i171) No. 7 — (R186) No. 1:***	Is harness normal?	Go to step **6**.	Repair or replace the harness.

Step		Check	Yes	No
6	**CHECK HARNESS (TRUNK UNLOCK).** Measure the resistance between the trunk lid lock actuator connector and chassis ground. ***Connector & terminal*** ***(R186) No. 2 — Chassis ground:***	Is the resistance less than 10 Ω?	Go to step **7**.	Repair or replace the harness.
7	**CHECK BODY INTEGRATED UNIT OUTPUT SIGNAL.** 1) Connect the body integrated unit connector. 2) Measure the voltage between the terminals of the body integrated unit connector when operating the door lock switch to LOCK direction. ***Connector & terminal*** ***Except for front door LH*** ***(i171) No. 2 (+) — (i171) No. 3 (–):*** ***Front door LH*** ***(i171) No. 2 (+) — (i171) No. 4 (–):***	Does the voltage change from less than 1 V → 9 V or more? (During lock output)	Go to step **8**.	Replace the body integrated unit. <Ref. to SL-72, Body Integrated Unit.>
8	**CHECK BODY INTEGRATED UNIT OUTPUT SIGNAL.** Measure the voltage between the terminals of the body integrated unit connector when operating the door lock switch to UNLOCK direction. ***Connector & terminal*** ***Except for front door LH*** ***(i171) No. 3 (+) — (i171) No. 2 (–):*** ***Front door LH*** ***(i171) No. 4 (+) — (i171) No. 2 (–):***	Does the voltage change from less than 1 V → 9 V or more? (During unlock output)	Go to step **9**.	Replace the body integrated unit. <Ref. to SL-72, Body Integrated Unit.>
9	**CHECK BODY INTEGRATED UNIT OUTPUT SIGNAL.** Measure the voltage between body integrated unit connector and chassis ground when operating the rear gate/trunk opener button. ***Connector & terminal*** ***(i171) No. 7 (+) — Chassis ground (–):***	Does the voltage change from less than 1 V → 9 V or more? (During unlock output)	Go to step **10**.	Replace the body integrated unit. <Ref. to SL-72, Body Integrated Unit.>
10	**CHECK DOOR LOCK ACTUATOR.** Check the door lock actuator. • Front door lock actuator <Ref. to SL-37, INSPECTION, Front Door Latch and Door Lock Actuator Assembly.> • Rear door lock actuator <Ref. to SL-43, INSPECTION, Rear Door Latch and Door Lock Actuator Assembly.>	Is the door lock actuator OK?	OUTBACK model Go to step **11**. Sedan model:Go to step **12**.	Replace the door latch and door lock actuator assembly.
11	**CHECK REAR GATE LOCK ACTUATOR.** Check the rear gate lock actuator. <Ref. to SL-48, Rear Gate Latch and Actuator Assembly.>	Is the rear gate lock actuator normal?	Check the connection status of the harness and connector that may have a temporary poor contact.	Replace the rear gate latch and actuator assembly.
12	**CHECK TRUNK LID LOCK ACTUATOR.** Check the trunk lid lock actuator. <Ref. to SL-50, Trunk Lid Latch and Actuator Assembly.>	Is trunk lid lock actuator normal?	Check the connection status of the harness and connector that may have a temporary poor contact.	Replace the trunk lid latch & actuator assembly.

4. Keyless Entry System

A: WIRING DIAGRAM

Refer to “Keyless Entry System” in the wiring diagram. <Ref. to WI-163, WIRING DIAGRAM, Keyless Entry System.>

B: ELECTRICAL SPECIFICATION

1. KEYLESS ENTRY CONTROL MODULE

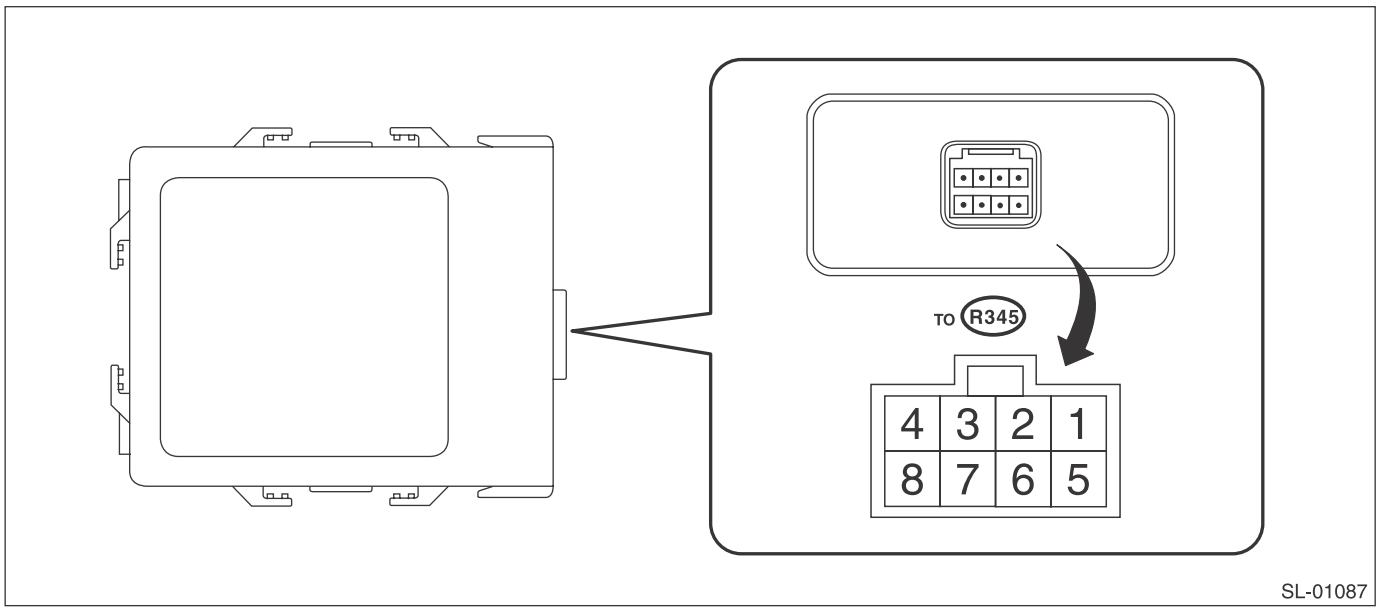

Content	Terminal No.	Measuring condition
—	1	—
—	2	—
BODY INTEGRATED UNIT	3 (OUT-PUT)	Battery voltage cannot be measured because of digital signal.
Power supply (Backup)	4	Battery voltage is constantly present.
—	5	—
—	6	—
Ground	7	0 V is constantly present.
—	8	—

2. BODY INTEGRATED UNIT

Refer to the Control Module I/O Signal of the BODY CONTROL SYSTEM (DIAGNOSIS). <Ref. to BC(diag)-7, ELECTRICAL SPECIFICATION, Control Module I/O Signal.>

C: INSPECTION

1. SYMPTOM CHART

Symptoms	Repair order	Reference
None of the functions of the keyless entry system operate.	1. Check the keyless transmitter battery.	<Ref. to SL-18, CHECK KEYLESS TRANSMITTER BATTERY AND FUNCTION, INSPECTION, Keyless Entry System.>
	2. Remove and visually check the following fuses. • No. 7 (in fuse & relay box) • No. 10 (in main fuse box) • No. 19 (in main fuse box)	If the fuse is blown out, replace the fuse with a new part. When there is no defective with the fuse, check the power supply and ground circuit. <Ref. to SL-10, CHECK POWER SUPPLY AND GROUND CIRCUIT, INSPECTION, Door Lock Control System.>
	3. Check the keyless entry control module.	<Ref. to SL-19, CHECK KEYLESS ENTRY CONTROL MODULE, INSPECTION, Keyless Entry System.>
	4. Check the power supply and ground circuit for body integrated unit.	<Ref. to SL-19, CHECK BODY INTEGRATED UNIT POWER SUPPLY AND GROUND CIRCUIT, INSPECTION, Keyless Entry System.>
	5. Check the key warning switch.	<Ref. to SL-22, CHECK KEY WARNING SWITCH., INSPECTION, Keyless Entry System.>
	6. Check the door lock switch signal.	<Ref. to SL-20, CHECK DOOR SWITCH, INSPECTION, Keyless Entry System.>
	7. Check the body integrated unit.	<Ref. to BC(diag)-2, Basic Diagnostic Procedure.>
The keyless transmitter cannot be registered.	1. Check the keyless transmitter battery.	<Ref. to SL-18, CHECK KEYLESS TRANSMITTER BATTERY AND FUNCTION, INSPECTION, Keyless Entry System.>
	2. Check the key warning switch.	<Ref. to SL-22, CHECK KEY WARNING SWITCH., INSPECTION, Keyless Entry System.>
	3. Check the door lock switch signal.	<Ref. to SL-25, CHECK DOOR LOCK SWITCH, INSPECTION, Keyless Entry System.>
	4. Check the body integrated unit.	<Ref. to BC(diag)-2, Basic Diagnostic Procedure.>

Symptoms	Repair order	Reference
Door lock or unlock does not operate. NOTE: If the door lock control system does not operate when using the door lock switch, check the door lock control system. <Ref. to SL-9, INSPECTION, Door Lock Control System.>	1. Check the keyless transmitter battery.	<Ref. to SL-18, CHECK KEYLESS TRANSMITTER BATTERY AND FUNCTION, INSPECTION, Keyless Entry System.>
	2. Check the keyless entry control module.	<Ref. to SL-19, CHECK KEYLESS ENTRY CONTROL MODULE, INSPECTION, Keyless Entry System.>
	3. Check the key warning switch.	<Ref. to SL-22, CHECK KEY WARNING SWITCH., INSPECTION, Keyless Entry System.>
	4. Check the door lock switch signal.	<Ref. to SL-20, CHECK DOOR SWITCH, INSPECTION, Keyless Entry System.>
	5. Check the body integrated unit.	<Ref. to BC(diag)-2, Basic Diagnostic Procedure.>
The keyless buzzer and hazard light does not operate.	1. Check the keyless buzzer operation.	<Ref. to SL-24, CHECK KEYLESS BUZZER, INSPECTION, Keyless Entry System.>
	2. Check the hazard light operation.	<Ref. to SL-24, CHECK HAZARD LIGHT OPERATION, INSPECTION, Keyless Entry System.>
Room light does not operate.	Check the room light operation.	<Ref. to SL-23, CHECK ROOM LIGHT OPERATION, INSPECTION, Keyless Entry System.>
Ignition switch illumination does not operate.	1. Check the ignition switch illumination.	<Ref. to SL-26, CHECK IGNITION SWITCH ILLUMINATION, INSPECTION, Keyless Entry System.>
	2. Check the body integrated unit.	<Ref. to BC(diag)-2, Basic Diagnostic Procedure.>

2. CHECK KEYLESS TRANSMITTER BATTERY AND FUNCTION

CAUTION:
Be sure to reset keyless transmitter of other vehicles registered to the inspection target vehicle, and vehicles to which keyless transmitters were registered for inspection, to the condition before performing the inspection. (Re-register the keyless transmitters.)

	Step	Check	Yes	No
1	**CHECK KEYLESS TRANSMITTER BATTERY.** 1) Remove the battery from the keyless transmitter. <Ref. to SL-73, REMOVAL, Keyless Transmitter.> 2) Check the battery voltage. <Ref. to SL-74, INSPECTION, Keyless Transmitter.>	Is the voltage 2.5 V or more?	Go to step **2**.	Replace the keyless transmitter battery. <Ref. to SL-73, Keyless Transmitter.>
2	**CHECK KEYLESS TRANSMITTER.** Register the keyless transmitter which operates normally on other vehicles to the inspection target vehicle. <Ref. to SL-74, REGISTRATION OF KEYLESS TRANSMITTER WITH SUBARU SELECT MONITOR, REPLACEMENT, Keyless Transmitter.> 1) Close all the doors and rear gate (OUTBACK model) or trunk lid (sedan model) of inspection target vehicle. 2) Using the keyless transmitter, lock and unlock the doors and rear gate of vehicle. For 4 door model, release the trunk lid lock.	Does the inspection target vehicle operate lock, unlock and trunk lid unlock normally?	Go to step **3**.	Due to vehicle malfunction, continue the keyless entry system diagnosis.
3	**CHECK KEYLESS TRANSMITTER.** Register the keyless transmitter of inspection target vehicle to the another vehicle on which the keyless system operates normally. <Ref. to SL-74, REGISTRATION OF KEYLESS TRANSMITTER WITH SUBARU SELECT MONITOR, REPLACEMENT, Keyless Transmitter.>	Is the keyless transmitter registered correctly?	Go to step **4**.	Replace the keyless transmitter. <Ref. to SL-74, REGISTRATION OF KEYLESS TRANSMITTER WITH SUBARU SELECT MONITOR, REPLACEMENT, Keyless Transmitter.>
4	**CHECK KEYLESS TRANSMITTER.** Check the registered keyless transmitter. 1) Close all the doors and rear gate of the vehicle which keyless system operates normally. 2) Using the keyless transmitter, lock and unlock the doors and rear gate of vehicle. For 4 door model, release the trunk lid lock.	Does the inspection target vehicle operate lock, unlock and trunk lid unlock normally?	Keyless transmitter is OK.	Replace the keyless transmitter. <Ref. to SL-74, REGISTRATION OF KEYLESS TRANSMITTER WITH SUBARU SELECT MONITOR, REPLACEMENT, Keyless Transmitter.>

3. CHECK KEYLESS ENTRY CONTROL MODULE

	Step	Check	Yes	No
1	**CHECK DIAGNOSTIC TROUBLE CODE (DTC).** 1) Prepare the Subaru Select Monitor kit. 2) Turn the ignition switch to ON (engine OFF) and run the “PC application for Subaru Select Monitor”. 3) On «System Selection Menu» display, select {Integ. unit mode}. 4) Select the {Diagnostic Code(s) Display}.	Is DTC B1500 “Keyless UART com. Malfunction” displayed?	Go to step **2**.	Keyless entry control module is normal.
2	**CHECK POWER SUPPLY.** 1) Disconnect the keyless entry control module connector. 2) Measure the voltage between keyless entry control module connector and chassis ground. ***Connector & terminal*** ***(R345) No. 4 (+) — Chassis ground (–):***	Is the voltage 10 V or more?	Go to step **3**.	Check the harness for open or short circuits between the keyless entry control module and the fuse.
3	**CHECK GROUND CIRCUIT.** Measure the resistance between keyless entry control module connector and chassis ground. ***Connector & terminal*** ***(R345) No. 7 — Chassis ground:***	Is the resistance less than 10 Ω?	Go to step **4**.	Repair or replace the harness.
4	**CHECK KEYLESS ENTRY CONTROL MODULE CIRCUIT.** 1) Disconnect the connector of body integrated unit. 2) Measure the resistance between keyless entry control module connector and body integrated unit connector. ***Connector & terminal*** ***(i171) No. 11 — (R345) No. 3:***	Is the resistance less than 10 Ω?	Replace the keyless entry control module.	Repair or replace the harness.

4. CHECK BODY INTEGRATED UNIT POWER SUPPLY AND GROUND CIRCUIT

For the detailed procedure, refer to the INSPECTION of POWER SUPPLY AND GROUND CIRCUIT of the Door Lock Control System. <Ref. to SL-10, CHECK POWER SUPPLY AND GROUND CIRCUIT, INSPECTION, Door Lock Control System.>

5. CHECK DOOR SWITCH

	Step	Check	Yes	No
1	**CHECK INPUT CIRCUIT.** 1) Prepare the Subaru Select Monitor kit. 2) Turn the ignition switch to ON (engine OFF) and run the "PC application for Subaru Select Monitor". 3) On «System Selection Menu» display, select {Integ. unit mode}. 4) Select the {Current Data Display}. 5) Select the {Driver's door SW input}, {P-door SW input}, {Rear right door SW input}, {Rear left door SW input}, and {R Gate SW input}.	Does the display switch between OFF ←→ ON when each door or rear gate, trunk lid is opened/closed?	The door switches, trunk lid latch switch or rear gate latch switch are normal.	Go to step **2**.
2	**CHECK HARNESS.** 1) Disconnect the connector of body integrated unit. 2) Disconnect the door switch connector that the display does not change. 3) Check the harness for open or short circuit between body integrated unit connector and faulty door switch connector. ***Connector & terminal*** ***Front door RH*** ***(i84) No. 13 — (R12) No. 2:*** ***Front door LH*** ***(i84) No. 14 — (R9) No. 2:*** ***Rear door RH*** ***(i84) No. 25 — (R16) No. 2:*** ***Rear door LH*** ***(i84) No. 24 — (R22) No. 2:*** ***Trunk lid*** ***(i84) No. 33 — (R186) No. 3:*** ***Rear gate latch*** ***(i84) No. 33 — (D46) No. 3:***	Is harness normal?	Go to step **3**.	Repair or replace the harness.
3	**CHECK HARNESS.** Measure the resistance between the faulty door switch connector and chassis ground. ***Connector & terminal*** ***Front door RH*** ***(R12) No. 3 — Chassis ground:*** ***Front door LH*** ***(R9) No. 3 — Chassis ground:*** ***Rear door RH*** ***(R16) No. 3 — Chassis ground:*** ***Rear door LH*** ***(R22) No. 3 — Chassis ground:*** ***Trunk lid*** ***(R186) No. 2 — Chassis ground:*** ***Rear gate latch*** ***(D47) No. 4 — Chassis ground:***	Is the resistance less than 10 Ω?	Go to step **4**.	Repair or replace the harness.

Step		Check	Yes	No
4	**CHECK DOOR SWITCH.** Measure the resistance between terminals of faulty door switch, trunk lid switch or rear gate latch switch. ***Connector & terminal*** ***Front RH door switch*** ***(R12) No. 2 — No. 3:*** ***Front LH door switch*** ***(R9) No. 2 — No. 3:*** ***Rear RH door switch*** ***(R16) No. 2 — No. 3:*** ***Rear LH door switch*** ***(R22) No. 2 — No. 3:*** ***Trunk lid latch switch*** ***(R186) No. 3 — No. 2:*** ***Rear gate latch switch*** ***(D47) No. 3 — No. 4:***	Is the resistance 1 MΩ or more when the door switch is pushed, or the trunk lid or rear gate is closed?	Go to step **5**.	Replace the faulty parts. • Door switch • Trunk lid latch & actuator ASSY • Rear gate latch & actuator ASSY
5	**CHECK DOOR SWITCH.** Measure the resistance between terminals of faulty door switch, trunk lid switch or rear gate latch switch. ***Connector & terminal*** ***Front RH door switch*** ***(R12) No. 2 — No. 3:*** ***Front LH door switch*** ***(R9) No. 2 — No. 3:*** ***Rear RH door switch*** ***(R16) No. 2 — No. 3:*** ***Rear LH door switch*** ***(R22) No. 2 — No. 3:*** ***Trunk lid latch switch*** ***(R186) No. 3 — No. 2:*** ***Rear gate latch switch*** ***(D47) No. 3 — No. 4:***	Is the resistance less than 10 Ω when switch is released?	Replace the body integrated unit. <Ref. to SL-72, Body Integrated Unit.>	Replace the faulty parts. • Door switch • Trunk lid latch & actuator ASSY • Rear gate latch & actuator ASSY

6. CHECK KEY WARNING SWITCH.

	Step	Check	Yes	No
1	**CHECK KEY WARNING SWITCH.** 1) Prepare the Subaru Select Monitor kit. 2) On «System Selection Menu» display, select {Integ. unit mode}. 3) Select the {Current Data Display & Save}. 4) Select the {key-lock warning SW}.	Is the normal input signal displayed when the key is inserted in/removed from the ignition switch?	The key warning switch is OK.	Go to step **2**.
2	**CHECK FUSE.** Remove and visually check fuse No. 18 (in the main fuse box).	Is the fuse blown out?	Replace the fuse with a new part.	Go to step **3**.
3	**CHECK KEY WARNING SWITCH CIRCUIT.** 1) Disconnect the connector of body integrated unit. 2) Insert the key into ignition switch. (LOCK position) 3) Measure the voltage between body integrated unit connector and chassis ground. ***Connector & terminal*** ***(B280) No. 4 (+) — Chassis ground (–):***	Is the voltage 10 V or more?	Go to step **4**.	Go to step **5**.
4	**CHECK KEY WARNING SWITCH CIRCUIT.** 1) Remove the key from ignition switch. 2) Measure the voltage between body integrated unit connector and chassis ground. ***Connector & terminal*** ***(B280) No. 4 (+) — Chassis ground (–):***	Is the voltage less than 1 V?	Replace the body integrated unit. <Ref. to SL-72, Body Integrated Unit.>	Go to step **5**.
5	**CHECK KEY WARNING SWITCH.** 1) Disconnect the key warning switch connector. 2) Insert the key into ignition switch. (LOCK position) 3) Measure the resistance between key warning switch terminals. ***Connector & terminal*** ***(B350) No. 3 — No. 4:***	Is the resistance less than 1 Ω?	Go to step **6**.	Replace the key warning switch.
6	**CHECK KEY WARNING SWITCH.** 1) Remove the key from ignition switch. 2) Measure the resistance between key warning switch terminals. ***Connector & terminal*** ***(B350) No. 3 — No. 4:***	Is the resistance 1 MΩ or more?	Check the following: • Harness for open circuits or shorts between the key warning switch and fuse. • Harness for open or short between the body integrated unit and key warning switch	Replace the key warning switch.

7. CHECK ROOM LIGHT OPERATION

	Step	Check	Yes	No
1	**CHECK ROOM LIGHT OPERATION.** Make sure the room light illuminates when the room light switch is ON, and goes off when the switch is OFF.	Does the room light illuminate or go off?	Go to step **2**.	Check the room light circuit. <Ref. to LI-65, INSPECTION, Room Light.>
2	**CHECK ROOM LIGHT OPERATION.** 1) Turn the room light switch to the "DOOR" position. 2) Open and close any door.	Does the room light illuminate ←→ go off (including off delay) when the door is opened and closed?	Go to step **3**.	Go to step **4**.
3	**CHECK KEYLESS ENTRY OPERATION.** Press the LOCK/UNLOCK button of the keyless transmitter.	Does it operate properly?	Replace the body integrated unit. <Ref. to SL-72, Body Integrated Unit.>	Check the keyless entry control module. <Ref. to SL-16, SYMPTOM CHART, INSPECTION, Keyless Entry System.>
4	**CHECK ROOM LIGHT.** 1) Disconnect the room light connector. 2) Check the room light. <Ref. to LI-65, INSPECTION, Room Light.>	Is room light normal?	Go to step **5**.	Replace the bulb or room light assembly.
5	**CHECK HARNESS.** 1) Disconnect the connector of body integrated unit. 2) Check the harness between body integrated unit connector and room light connector. ***Connector & terminal*** ***(i84) No. 4 — (R52) No. 2:***	Is harness normal?	Go to step **6**.	Repair or replace the harness.
6	**CHECK HARNESS.** Measure the voltage between room light connector and chassis ground. ***Connector & terminal*** ***(R52) No. 3 (+) — Chassis ground (–):***	Is the voltage 10 V or more?	Replace the body integrated unit. <Ref. to SL-72, Body Integrated Unit.>	Repair or replace the harness.

8. CHECK HAZARD LIGHT OPERATION

	Step	Check	Yes	No
1	**CHECK HAZARD LIGHT OPERATION.** Make sure the hazard light blinks when hazard switch is turned to ON.	Does the hazard light blink?	Go to step **2**.	Check the hazard light circuit.
2	**CHECK BODY INTEGRATED UNIT.** 1) Prepare the Subaru Select Monitor kit. 2) Turn the ignition switch to ON (engine OFF) and run the “PC application for Subaru Select Monitor”. 3) On «System Selection Menu» display, select {Integ. unit mode}. 4) Select {Hazard answer-back setup} from {ECM customizing}.	Is the setting ON?	Go to step **3**.	Change the setting to ON.
3	**CHECK HAZARD LIGHT CIRCUIT.** 1) Disconnect the connector of body integrated unit. 2) Disconnect the turn signal & hazard unit connector. 3) Measure the resistance between body integrated unit connector and turn signal&hazard unit connector. ***Connector & terminal*** ***(i171) No. 18 — (i170) No. 8:***	Is the resistance less than 10 Ω?	Go to step **4**.	Repair or replace the harness.
4	**CHECK OUTPUT TO HAZARD LIGHT.** 1) Remove the key from ignition switch. 2) Prepare the Subaru Select Monitor kit. 3) On «System Selection Menu» display, select {Integ. unit mode}. 4) From {Current Data Display & Save}, select {Hazard Output}.	Is output signal present when operating the transmitter LOCK/UNLOCK button?	System is normal.	Inspect the keyless entry system. If there are no problems, replace the body integrated unit. • Inspection:<Ref. to SL-16, SYMPTOM CHART, INSPECTION, Keyless Entry System.> • Replacement:<Ref. to SL-72, Body Integrated Unit.>

9. CHECK KEYLESS BUZZER

	Step	Check	Yes	No
1	**CHECK KEYLESS BUZZER SETTING.** 1) Prepare the Subaru Select Monitor kit. 2) Turn the ignition switch to ON (engine OFF) and run the “PC application for Subaru Select Monitor”. 3) On «System Selection Menu» display, select {Integ. unit mode}. 4) Select {Answer-back buzzer setup} from {ECM customizing}.	Is the setting ON?	Go to step **2**.	Change the setting to ON.
2	**CHECK BODY INTEGRATED UNIT.** 1) Select the {Function check} from {Integ. unit mode}. 2) Select the {Keyless Buzzer Output} and execute it.	Does the keyless buzzer sound?	Check the keyless control module.	Go to step **3**.

	Step	Check	Yes	No
3	**CHECK KEYLESS BUZZER CIRCUIT.** 1) Turn the ignition switch to OFF. 2) Disconnect the body integrated unit connector and keyless buzzer connector. 3) Measure the resistance between body integrated unit connector and keyless buzzer connector. ***Connector & terminal*** ***(B280) No. 20 — (B490) No. 1:***	Is the resistance less than 10 Ω?	Go to step **4**.	Repair or replace the harness.
4	**CHECK KEYLESS BUZZER CIRCUIT.** Measure the resistance between keyless buzzer connector and chassis ground. ***Connector & terminal*** ***(B490) No. 2 — Chassis ground:***	Is the resistance less than 10 Ω?	Go to step **5**.	Repair or replace the harness.
5	**CHECK KEYLESS BUZZER.** 1) Remove the keyless buzzer. 2) Connect the battery positive (+) terminal to terminal No. 2 of keyless buzzer, and negative (–) terminal to terminal No. 1 and check if buzzer sounds. <Ref. to SL-71, INSPECTION, Keyless Buzzer.>	Does the keyless buzzer sound?	Go to step **6**.	Replace the keyless buzzer.
6	**CHECK BODY INTEGRATED UNIT.** 1) Prepare the Subaru Select Monitor kit. 2) Select the {Function check} from {Integ. unit mode}. 3) Select the {Keyless Buzzer Output} and execute it. 4) Measure the voltage between body integrated unit connector and chassis ground.	Is the voltage 9 V or more?	Go to step **7**.	Replace the body integrated unit. <Ref. to SL-72, Body Integrated Unit.>
7	**CHECK OUTPUT OF BODY INTEGRATED UNIT.** 1) Select the {Current Data Display & Save} from {Integ. unit mode}. 2) Select the {Keyless Buzzer Output}. 3) Press the LOCK/UNLOCK button of the keyless transmitter.	Is output signal present when operating the LOCK/UNLOCK button?	System is normal.	Inspect the keyless entry system. If there are no problems, replace the body integrated unit. • Inspection:<Ref. to SL-16, SYMPTOM CHART, INSPECTION, Keyless Entry System.> • Replacement:<Ref. to SL-72, Body Integrated Unit.>

10.CHECK DOOR LOCK SWITCH

For operation procedures, refer to the INSPECTION of DOOR LOCK SWITCH of the Door Lock Control System. <Ref. to SL-11, CHECK DOOR LOCK SWITCH, INSPECTION, Door Lock Control System.>

11.CHECK IGNITION SWITCH ILLUMINATION

	Step	Check	Yes	No
1	**CHECK IGNITION CIRCUIT.** Check the ignition switch circuit.	Is the circuit normal?	Go to step **2**.	Repair or replace.
2	**CHECK DOOR SWITCH CIRCUIT.** Check the door switch circuit.	Is the circuit normal?	Go to step **3**.	Repair or replace.
3	**CHECK FUSE.** Remove and visually check fuse No. 18 (in the main fuse box).	Is the fuse blown out?	Replace the fuse with a new part.	Go to step **4**.
4	**CHECK HARNESS.** 1) Disconnect the ignition switch illumination connector. 2) Measure the voltage between ignition switch illumination connector and chassis ground. ***Connector & terminal*** ***(B350) No. 1 (+) — Chassis ground (–):***	Is the voltage 10 V or more?	Go to step **5**.	Check the harness for open circuits or shorts between the ignition switch illumination and fuse.
5	**CHECK IGNITION SWITCH ILLUMINATION CIRCUIT.** 1) Disconnect the connector of body integrated unit. 2) Check the harness for open or short circuit between body integrated unit connector and ignition switch illumination connector. ***Connector & terminal*** ***(B280) No. 25 — (B350) No. 2:***	Is harness normal?	Go to step **6**.	Check the harness for open circuits and shorts between the body integrated unit and ignition switch illumination.
6	**CHECK IGNITION SWITCH ILLUMINATION BULB.** Apply battery voltage to the bulb.	Does the bulb illuminate?	Replace the body integrated unit. <Ref. to SL-72, Body Integrated Unit.>	Replace the ignition switch illumination bulb. <Ref. to LI-71, REMOVAL, Ignition Switch Illumination.>

5. Security System

A: WIRING DIAGRAM

Refer to “Security System” in the wiring diagram. <Ref. to WI-209, WIRING DIAGRAM, Security System.>

B: ELECTRICAL SPECIFICATION

Refer to the Control Module I/O Signal of the BODY CONTROL SYSTEM (DIAGNOSIS). <Ref. to BC(diag)-7, ELECTRICAL SPECIFICATION, Control Module I/O Signal.>

C: INSPECTION

1. BASIC DIAGNOSTIC PROCEDURE

	Step	Check	Yes	No
1	**INITIAL CHECK.** Check keyless entry system.	Does the keyless entry system operate normally?	Go to step **2**.	Check the keyless entry control module. <Ref. to SL-16, INSPECTION, Keyless Entry System.>
2	**CHECK SECURITY ON/OFF SETTING.** 1) Remove the key from ignition switch, and then close all doors. 2) Press the UNLOCK button of the keyless transmitter. 3) Check the blinking pattern of security indicator light.	Does the security indicator light blinks at 3 seconds intervals?	Go to step **3**.	Check the security indicator light circuit. <Ref. to SL-29, CHECK SECURITY INDICATOR LIGHT CIRCUIT, INSPECTION, Security System.>
3	**CHECK SECURITY ON/OFF SETTING.** 1) Press the LOCK button of the keyless transmitter. 2) Check the blinking pattern of security indicator light.	Does the security indicator light blinks in the following pattern? / When monitor delay set to 0 second: Blinks twice in 0.5 seconds at 2 seconds intervals / When monitor delay set to 30 seconds: Repeat blinking once in 30 seconds at 0.4 seconds intervals	Go to step **6**.	Go to step **4**.
4	**CHANGE SECURITY SYSTEM SETTING.** Change the security system setting to ON. <Ref. to SL-29, SECURITY SYSTEM ON/OFF SETTING, INSPECTION, Security System.>	Is the setting change implemented normally?	Go to step **5**.	• Check the ignition switch circuit. <Ref. to SL-30, CHECK IGNITION SWITCH CIRCUIT, INSPECTION, Security System.> • Check the door lock switch circuit. <Ref. to SL-25, CHECK DOOR LOCK SWITCH, INSPECTION, Keyless Entry System.>

	Step	Check	Yes	No
5	**CHECK SECURITY SYSTEM SETTING CHANGE.** 1) Remove the key from ignition switch, and then close all doors. 2) Press the LOCK button of the keyless transmitter. 3) Check the blinking pattern of security indicator light.	Does the security indicator light blinks in the following pattern? / When monitor delay set to 0 second: Blinks twice in 0.5 seconds at 2 seconds intervals / When monitor delay set to 30 seconds: Repeat blinking once in 30 seconds at 0.4 seconds intervals	Go to step **6**.	Check the security indicator light. <Ref. to SL-29, CHECK SECURITY INDICATOR LIGHT CIRCUIT, INSPECTION, Security System.>
6	**CHECK SECURITY SYSTEM OPERATION.** Press the LOCK button of keyless transmitter, and wait for 30 seconds.	Does the security indicator light blink twice in 0.5 seconds at 2 seconds intervals?	Go to step **7**.	Replace the body integrated unit. <Ref. to SL-72, Body Integrated Unit.>
7	**CHECK SECURITY ALARM OPERATION.** 1) Using the door lock switch on the driver's door, unlock all doors. 2) Open any door, trunk or rear gate.	Does the security alarm operate when opening any door, trunk, or rear gate?	Go to step **8**.	Check the door switches, trunk lid switch or rear gate latch switch. <Ref. to SL-20, CHECK DOOR SWITCH, INSPECTION, Keyless Entry System.>
8	**CHECK SECURITY ALARM OPERATION.** Check the security alarm operation.	Do all security alarms operate? /horn activation/hazard light flashing/security indicator light activation	Go to step **9**.	• Check the horn. <Ref. to SL-30, CHECK HORN, INSPECTION, Security System.> • Check the hazard light. <Ref. to SL-30, CHECK HAZARD LIGHT OPERATION, INSPECTION, Security System.>
9	**CHECK SECURITY ALARM CANCEL OPERATION.** While the security alarm is operating, press any button on the keyless transmitter, or turn the ignition switch to ON.	Do all security alarms stop? / horn/hazard light	Go to step **10**.	Check the ignition switch circuit. <Ref. to SL-30, CHECK IGNITION SWITCH CIRCUIT, INSPECTION, Security System.>
10	**CHECK SECURITY SYSTEM STATUS MEMORY.** Check if the system functions normally even when the battery is temporarily disconnected. <Ref. to SL-29, CHECK SECURITY SYSTEM CONDITION MEMORY, INSPECTION, Security System.>	Does the system function normally even when the battery is temporarily disconnected?	Go to step **11**.	Replace the body integrated unit. <Ref. to SL-72, Body Integrated Unit.>
11	**CHECK IMPACT SENSOR (DEALER OPTION).** Check the sensitivity of impact sensor. <Ref. to SL-67, CHECK IMPACT SENSOR, ADJUSTMENT, Impact Sensor.>	Is the sensitivity set appropriately?	Press the UNLOCK button of keyless transmitter, and finish the diagnosis.	Adjust the sensitivity appropriately. <Ref. to SL-68, IMPACT SENSITIVITY ADJUSTMENT, ADJUSTMENT, Impact Sensor.>

NOTE:
If any of the following symptoms emerges, check the function settings of body integrated unit. <Ref. to BC(diag)-17, User Customizing.>
• Horn does not sound though security alarm is activated. A possible cause for this is that the «Security Alarm Setup» has been set to ON by the customization function.
• Horn sounds when the security is set to ON (monitoring) by the keyless transmitter. A possible cause for this is that the impact sensor presence setting (ON: present, OFF: not present) has been set to ON by the customization function though no impact sensor is fitted.

2. CHECK SECURITY SYSTEM CONDITION MEMORY

1) Remove the key from the ignition switch or turn the ignition switch to OFF.
2) Close all the doors, trunk lid and rear gate.
3) Open the front hood.
4) Press the LOCK button of the keyless transmitter.

NOTE:
Wait until the security indicator light starts blinking twice in 0.5 second at 2 seconds intervals.
If the monitor delay is set to 30 seconds, wait for 30 seconds.
5) Disconnect the ground cable from battery.
6) Connect the ground cable to battery.
7) Check if the security indicator light blinks twice in 0.5 second at 2 seconds intervals. If not, replace the body integrated unit.

3. SECURITY SYSTEM ON/OFF SETTING

1) Close all doors, trunk lid and rear gate, and get seated on the driver's seat. Press the UNLOCK button of the keyless transmitter.
2) Turn the ignition switch to ON.
3) Press the central door lock switch and open the driver's door simultaneously, and maintain this condition for 10 seconds.
4) Status changes to OFF if the security system is ON, or changes to ON if the security system is OFF.

4. CHECK DOOR SWITCH

Refer to the door switch inspection procedure of keyless entry system. <Ref. to SL-20, CHECK DOOR SWITCH, INSPECTION, Keyless Entry System.>

5. CHECK SECURITY INDICATOR LIGHT CIRCUIT

For the procedure, refer to CHECK SECURITY INDICATOR LIGHT CIRCUIT in IMMOBILIZER (DIAGNOSTICS). <Ref. to IM(diag)-11, CHECK SECURITY INDICATOR LIGHT CIRCUIT, INSPECTION, Diagnostics Chart for Security Indicator Light.>

6. CHECK HORN

Step		Check	Yes	No
1	**CHECK HORN OPERATION.** Check if the horn sounds when pressing the horn switch.	Does horn sound?	Go to step **2**.	Check the horn circuit.
2	**CHECK OUTPUT TO HORN RELAY.** 1) Connect the Subaru Select Monitor kit. 2) Turn the ignition switch to ON (engine OFF) and run the “PC application for Subaru Select Monitor”. 3) On «System Selection Menu» display, select {Integ. unit mode}. 4) Select the {Function check}. 5) Select the {Hazard Output} and execute it.	Does horn sound?	The horn circuit is OK.	Go to step **3**.
3	**CHECK HORN RELAY CIRCUIT.** 1) Disconnect the connector of body integrated unit. 2) Remove the horn relay. 3) Measure the resistance between body integrated unit connector and horn relay. ***Connector & terminal*** ***(B280) No. 24 — Horn relay No. 4:***	Is the resistance less than 10 Ω?	Check body integrated unit. <Ref. to LAN(diag)-2, Basic Diagnostic Procedure.>	Repair or replace the harness.

7. CHECK HAZARD LIGHT OPERATION

Refer to the hazard light inspection procedure of keyless entry system. <Ref. to SL-24, CHECK HAZARD LIGHT OPERATION, INSPECTION, Keyless Entry System.>

8. CHECK IGNITION SWITCH CIRCUIT

Step		Check	Yes	No
1	**CHECK IGNITION SWITCH VOLTAGE.** 1) Prepare the Subaru Select Monitor kit. 2) Turn the ignition switch to ON (engine OFF) and run the “PC application for Subaru Select Monitor”. 3) On «System Selection Menu» display, select {Integ. unit mode}. 4) Select the {Current Data Display & Save}. 5) Select the {BATT voltage} and {IG power supply}.	Does the {IG power supply voltage} indicates 0 V when ignition is OFF or a value in a range of ±1 V from the {BATT voltage} when ignition is ON.	The ignition switch input circuit is OK.	Go to step **2**.
2	**CHECK IGNITION SWITCH CIRCUIT.** 1) Turn the ignition switch to OFF. 2) Disconnect the harness connector of body integrated unit. 3) Turn the ignition switch to ON. 4) Measure the voltage between harness connector terminal and chassis ground. ***Connector & terminal*** ***(i171) No. 17 (+) — Chassis ground (–):***	Is the voltage 10 V or more?	Check body integrated unit. <Ref. to BC(diag)-2, Basic Diagnostic Procedure.>	Check the harness for open or short circuit between body integrated unit and fuse.

6. Front Inner Remote

A: REMOVAL

1) Remove the door trim. <Ref. to EI-60, REMOVAL, Door Trim.>
2) Remove the screws to detach the front inner remote handle.

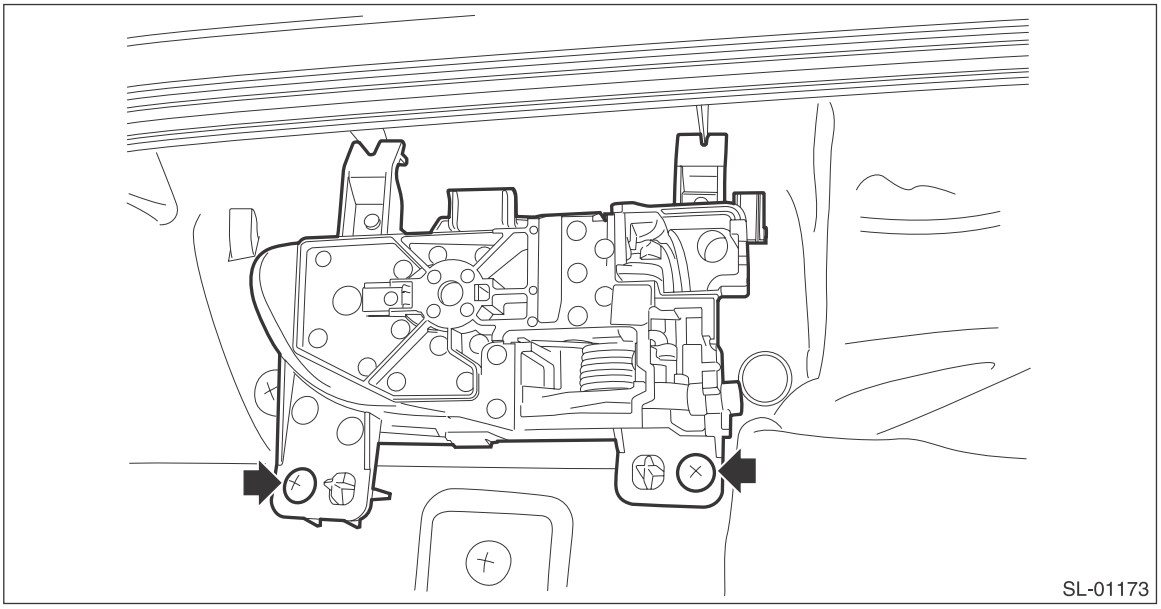

B: INSTALLATION

1) Before installation, check the following items.
- Cable is free from deformation such as fray.
- Grease is applied sufficiently to cable joints.

If grease is insufficient, add it as necessary before assembling the cable.
2) Install each part in the reverse order of removal.

C: INSPECTION

Check if the front remote handle operates normally.
- If the lever is faulty, replace the front inner remote handle.
- If the cable is deformed, replace the front door latch & door lock actuator assembly.

7. Front Outer Handle

A: REMOVAL

1) Raise the front door glass to the top position.
2) Remove the door trim. <Ref. to EI-60, REMOVAL, Door Trim.>
3) Remove the sealing cover.

CAUTION:
- **Carefully remove the butyl tape. Excessive force will easily break the cover.**
- **If the sealing cover gets broken, replace it with a new part.**

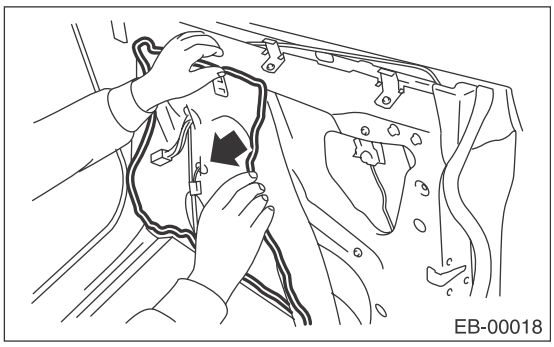

4) Release the rod from the rod clamp of outer handle.

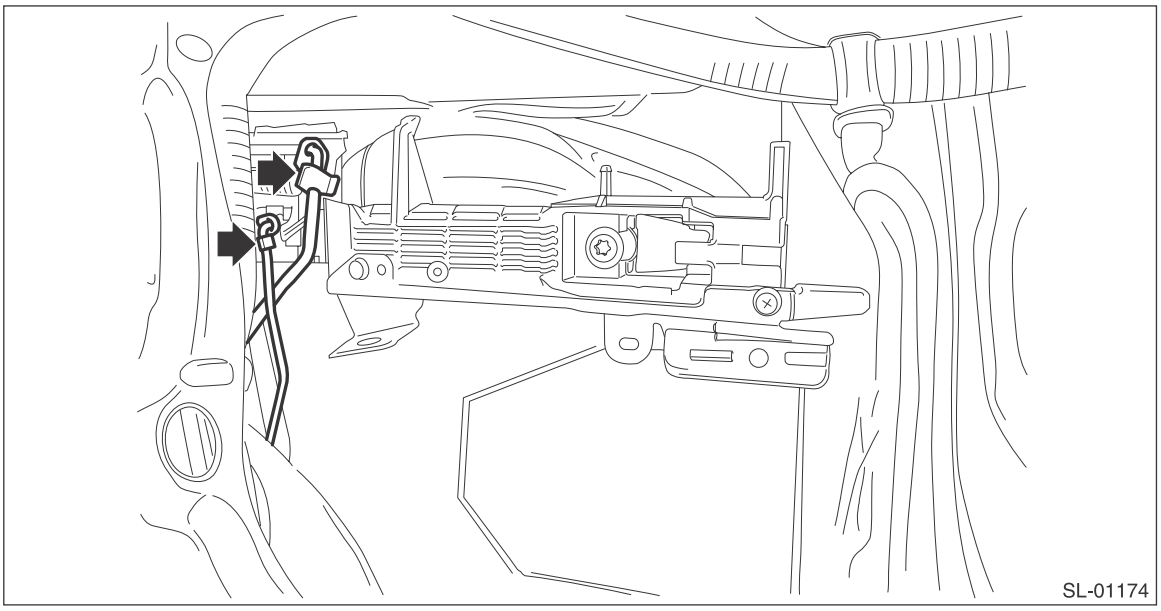

5) Remove the door outer handle cover.

Preparation tool: TORX® T30

(1) Remove the plug to the rear of the door panel.

(2) Loosen the TORX® bolt and remove the door outer handle cover.

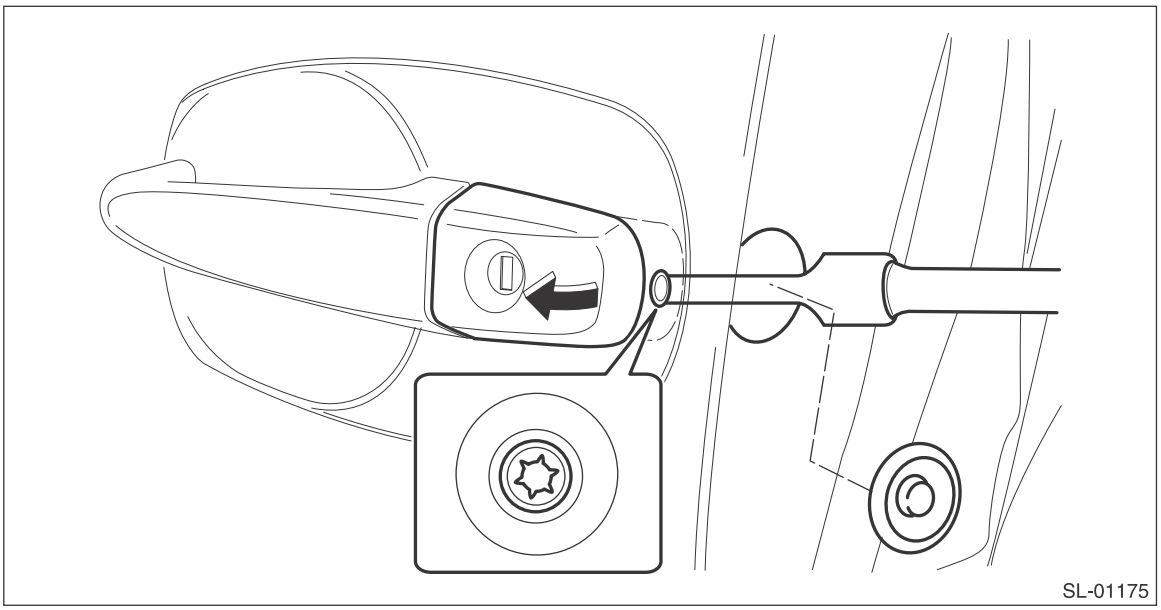

6) Move the front outer handle to the rear and remove the front outer handle.

CAUTION:
Do not apply excessive force to remove the handle from the door panel. The door panel may become deformed.

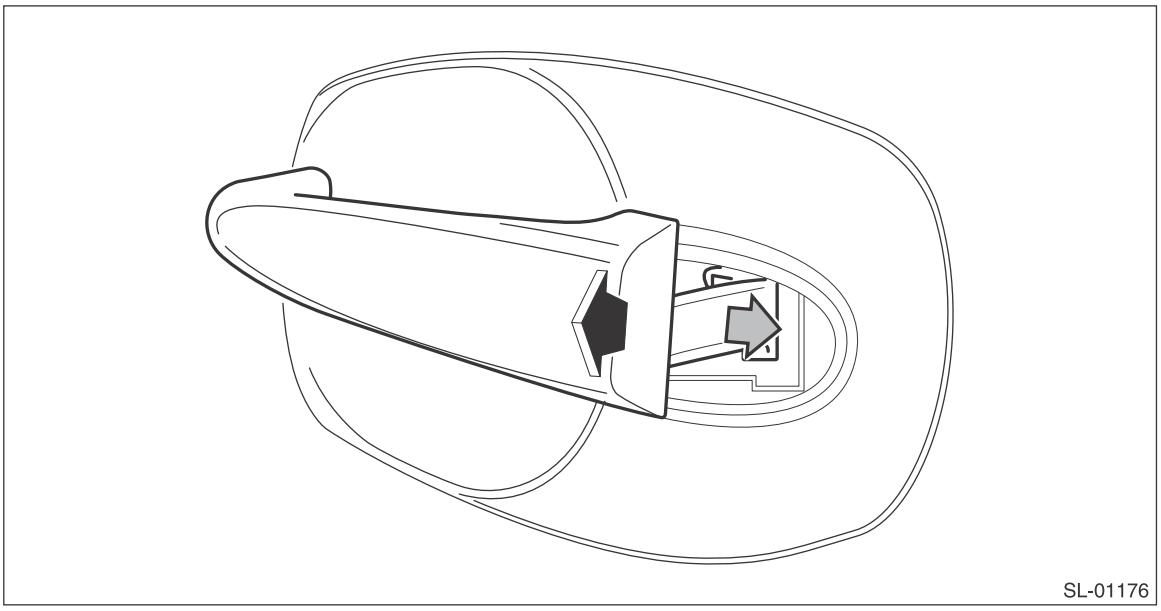

7) Remove the frame assembly.

Preparation tool: TORX® T30

(1) Remove the outer spacer.

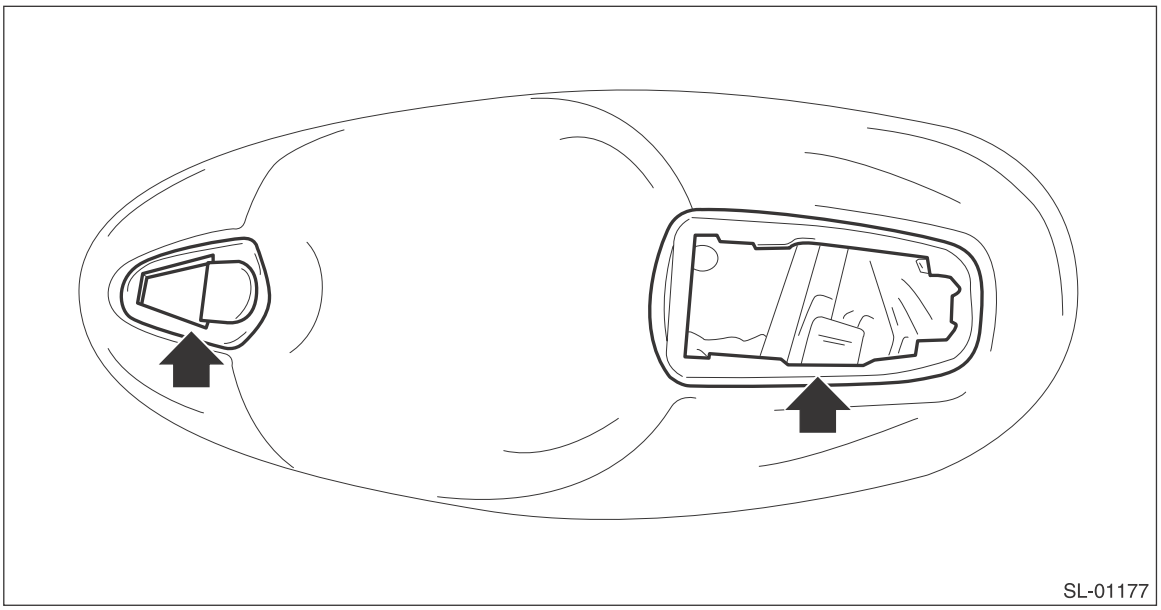

(2) Loosen the TORX® bolt and remove the frame assembly from the door panel.

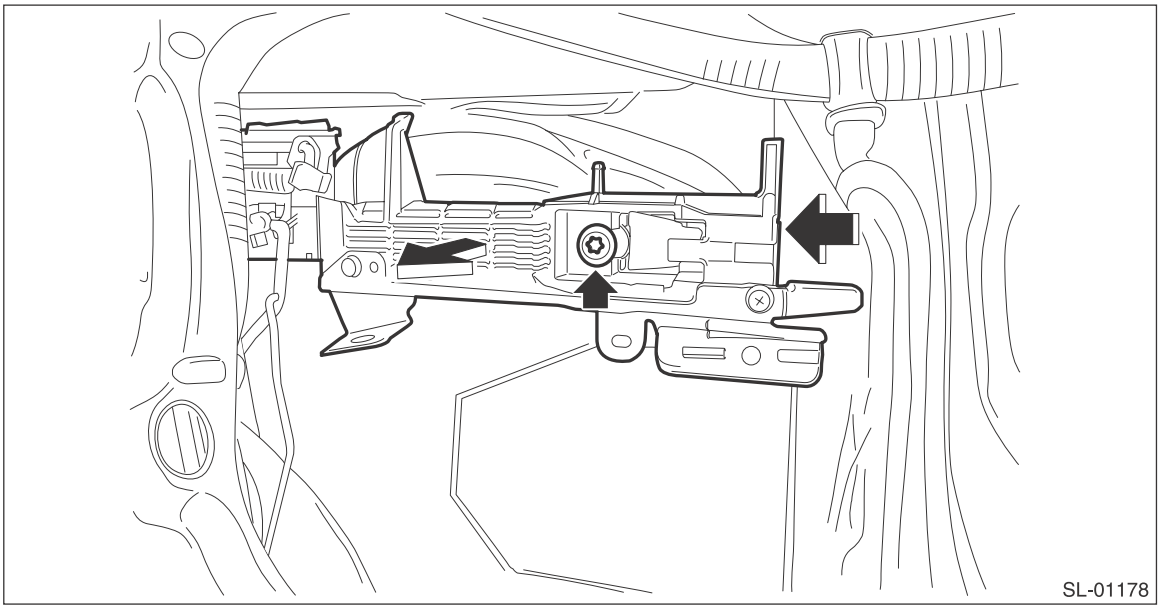

B: INSTALLATION

1) Before installation, check the following items.
- Rod is free from deformation.
- Grease is applied sufficiently to rod joints.

If grease is insufficient, add it as necessary before assembling the rod.
2) Install each part in the reverse order of removal.

Tightening torque:
Refer to "COMPONENT" of "General Description". <Ref. to SL-2, DOOR LOCK ASSEMBLY, COMPONENT, General Description.>

C: INSPECTION

Check if the front outer handle operates normally.
- If the lever is faulty, replace the front outer handle.
- If the rod is deformed, replace the front door latch & door lock actuator assembly.

8. Front Door Latch and Door Lock Actuator Assembly

A: REMOVAL

1) Raise the front door glass to the top position.
2) Remove the front door trim. <Ref. to EI-60, REMOVAL, Door Trim.>
3) Remove the sealing cover.

CAUTION:
- **Carefully remove the butyl tape. Excessive force will easily break the cover.**
- **If the sealing cover gets broken, replace it with a new part.**

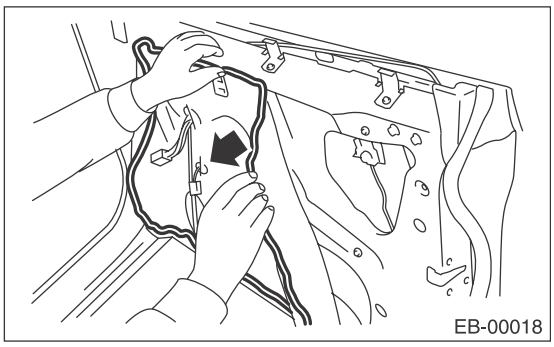

4) Release the rod from the rod clamp of outer handle.

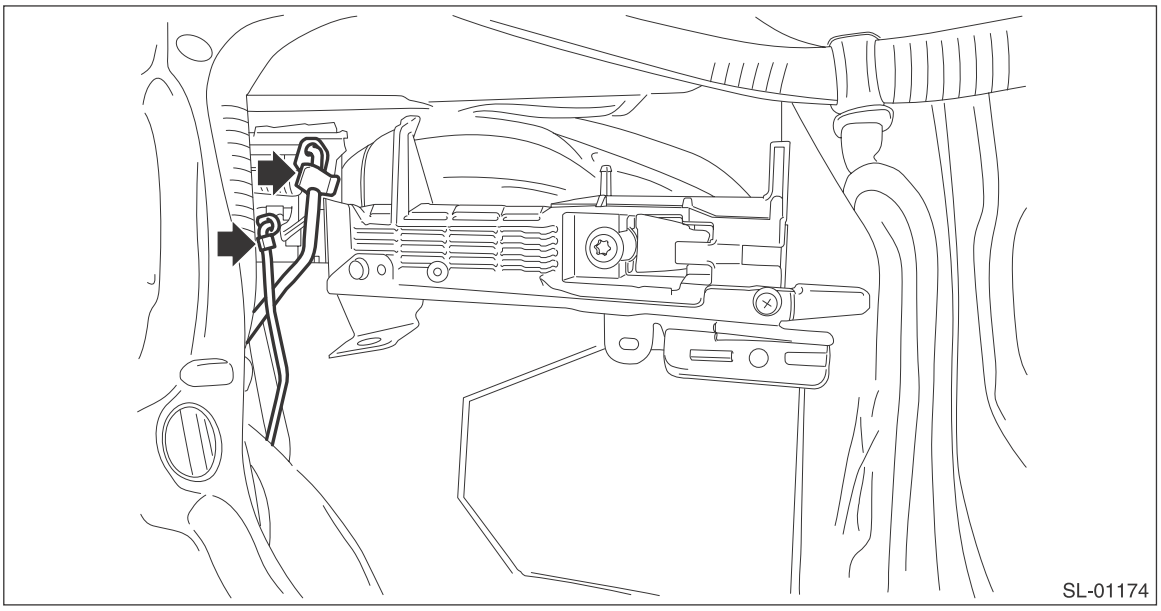

5) Remove the rear sash lower.
   (1) Remove the lower side of the glass run rubber.

(2) Remove the bolt and remove the rear sash lower.

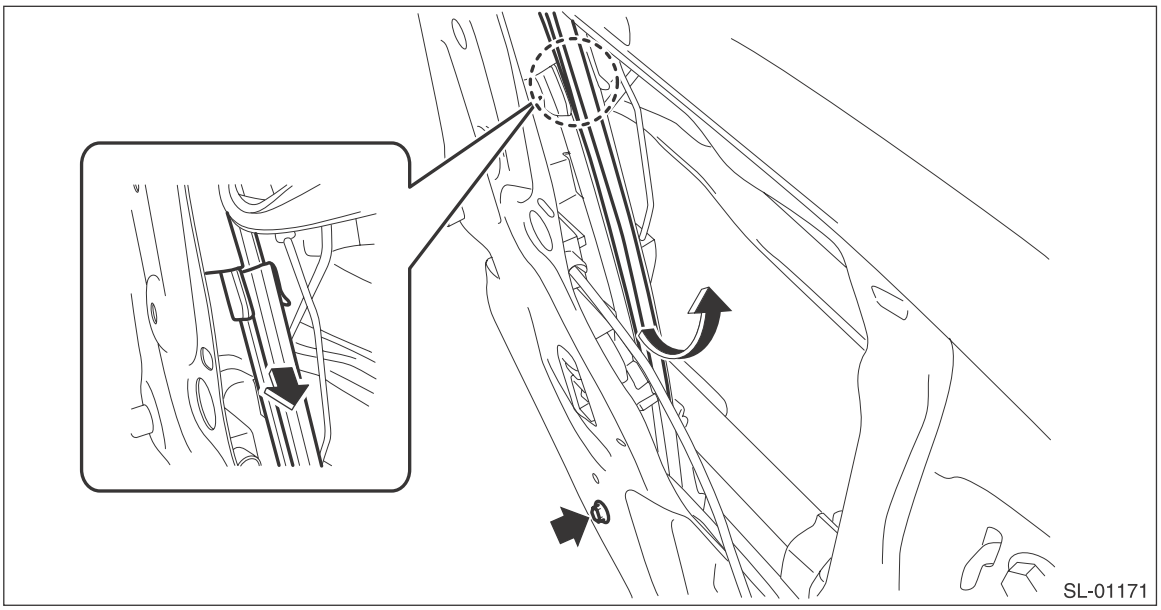

6) Remove the front door latch and door lock actuator assembly.
(1) Disconnect the connector.
(2) Remove the screws, and remove the front door latch & door lock actuator assembly.

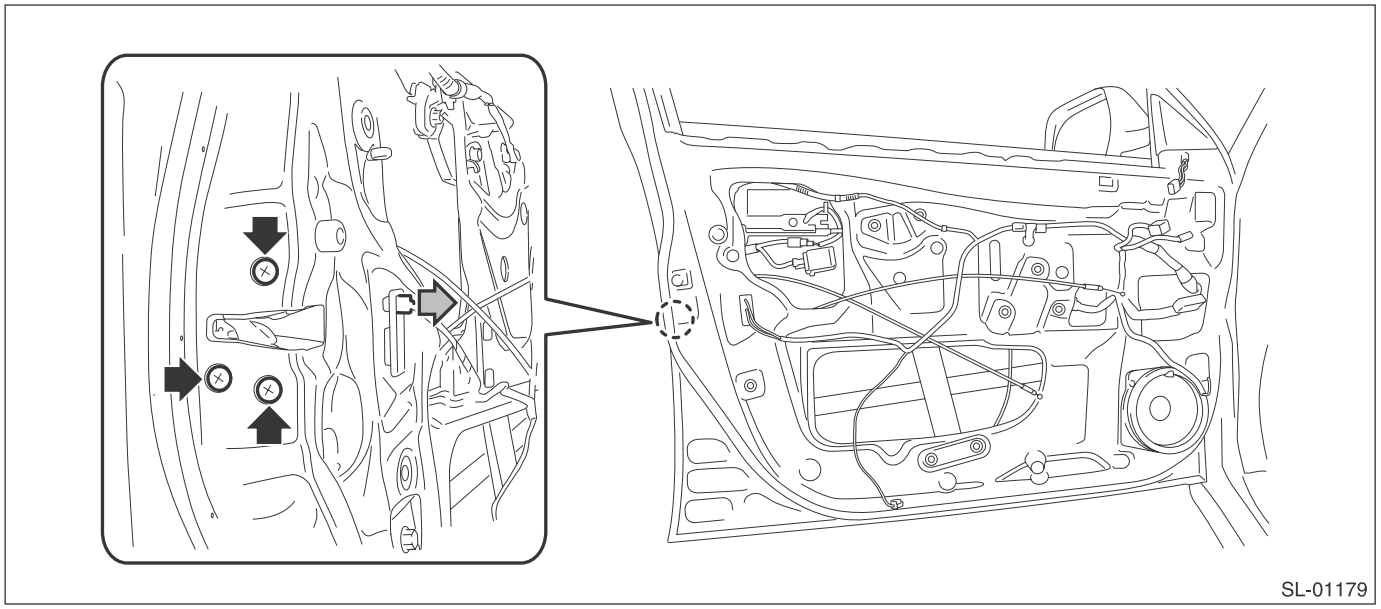

B: INSTALLATION

1) Before installation, check the following items.
- Cable and rod are free from deformation.
- Grease is applied sufficiently to rod joints.

If grease is insufficient, add it as necessary before assembling the rod.
2) Install each part in the reverse order of removal.

Tightening torque:
Refer to "COMPONENT" of "General Description". <Ref. to SL-2, DOOR LOCK ASSEMBLY, COMPONENT, General Description.>

C: INSPECTION

1. FRONT DOOR LATCH

Check if the front door latch operates normally.

- If the cable or rod is faulty, replace the front door latch & door lock actuator assembly.

2. FRONT DOOR LOCK ACTUATOR

1) Disconnect the front door lock actuator connector.
2) Check the door lock operation by applying battery voltage between the terminals of front door lock actuator.

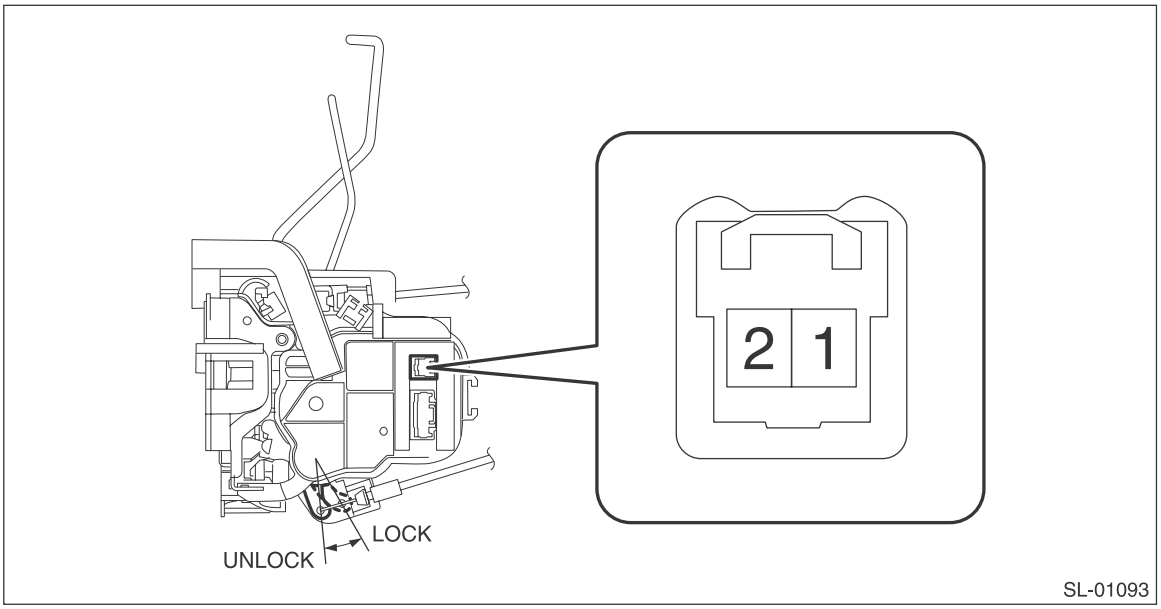

Inspection conditions	Terminal No.	
	1	2
LOCK → UNLOCK	–	+
UNLOCK → LOCK	+	–

3) If the actuator does not operate normally, replace the front door latch & door lock actuator assembly.

9. Rear Inner Remote

A: REMOVAL

1) Remove the door trim. <Ref. to EI-60, REMOVAL, Door Trim.>
2) Remove the screws and detach the rear inner remote handle.

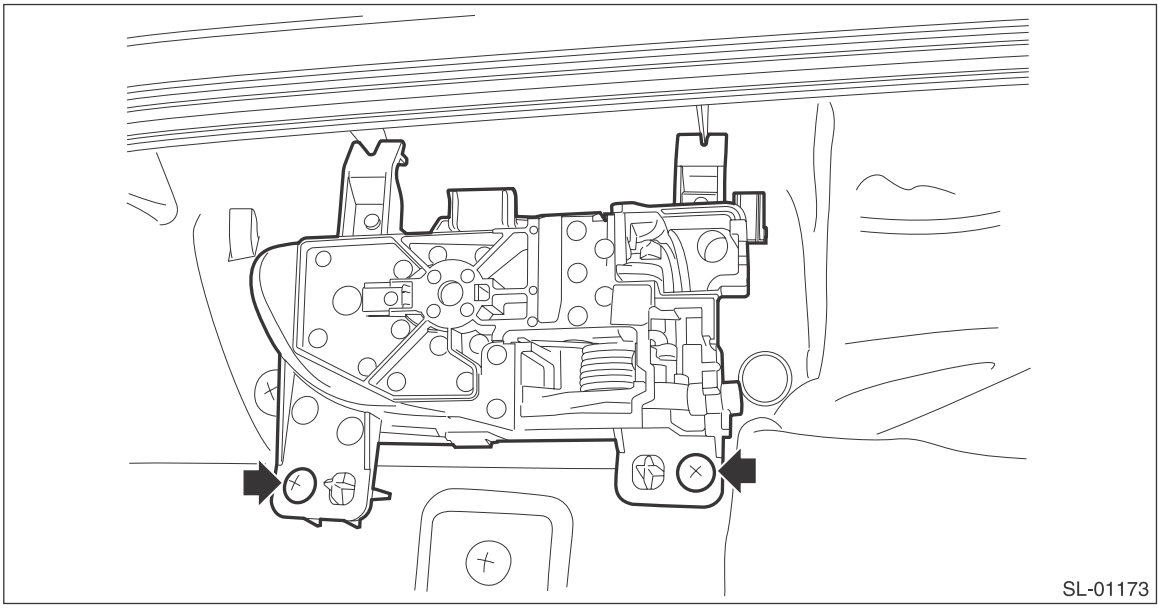

B: INSTALLATION

1) Before installation, check the following items.
- Cable is free from deformation such as fray.
- Grease is applied sufficiently to cable joints.

If grease is insufficient, add it as necessary before assembling the cable.
2) Install each part in the reverse order of removal.

C: INSPECTION

Check if the rear remote handle operates normally.
- If the lever is faulty, replace the rear inner remote handle.
- If the cable is deformed, replace the rear door latch & door lock actuator assembly.

10.Rear Outer Handle

A: REMOVAL

1) Raise the rear door glass to the top position.
2) Remove the door trim. <Ref. to EI-60, REMOVAL, Door Trim.>
3) Remove the sealing cover.

CAUTION:
- **Carefully remove the butyl tape. Excessive force will easily break the cover.**
- **If the sealing cover gets broken, replace it with a new part.**

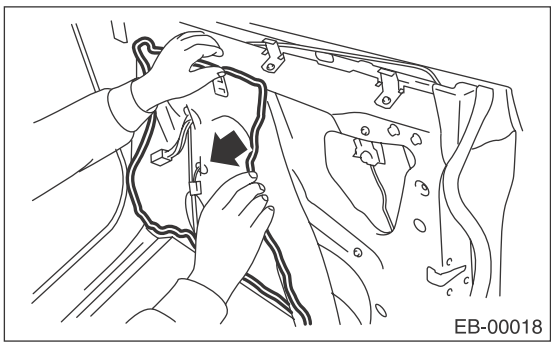

4) Move downward the rear door latch & door lock actuator assembly.
   (1) Disconnect the connector.
   (2) Remove the screws and move downward the rear door latch & door lock actuator assembly.

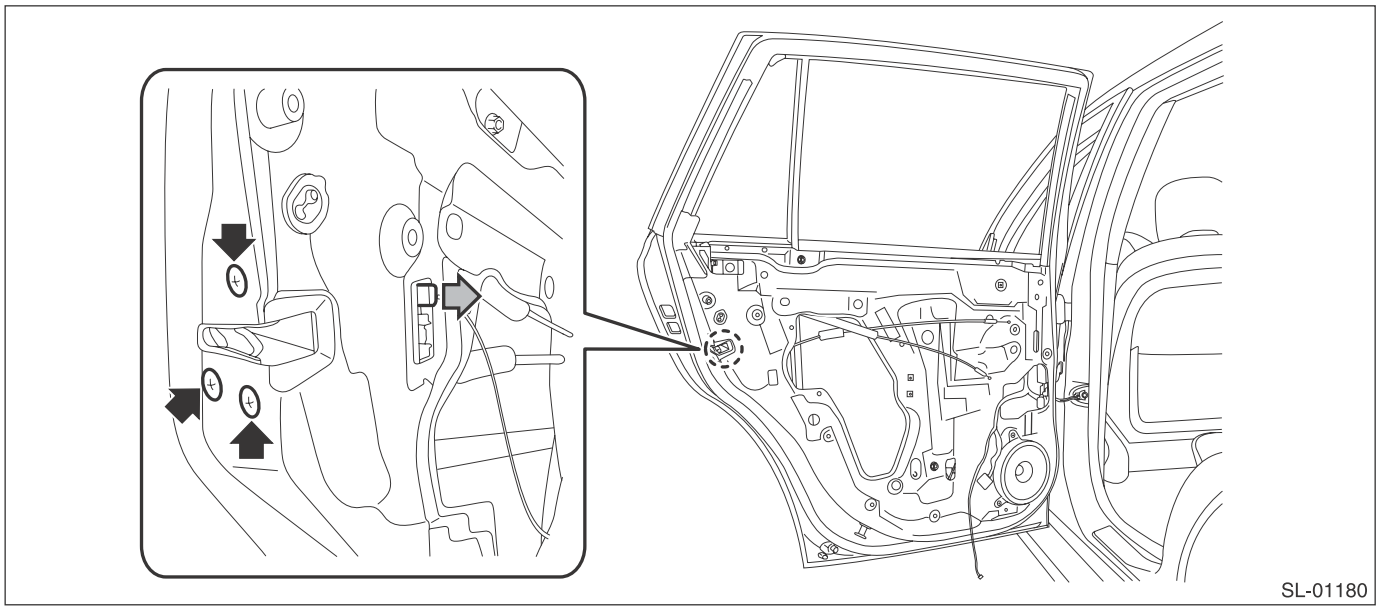

5) Remove the door outer handle cover.

Preparation tool: TORX® T30
   (1) Remove the child protector cover.

(2) Loosen the TORX® bolt and remove the door outer handle cover.

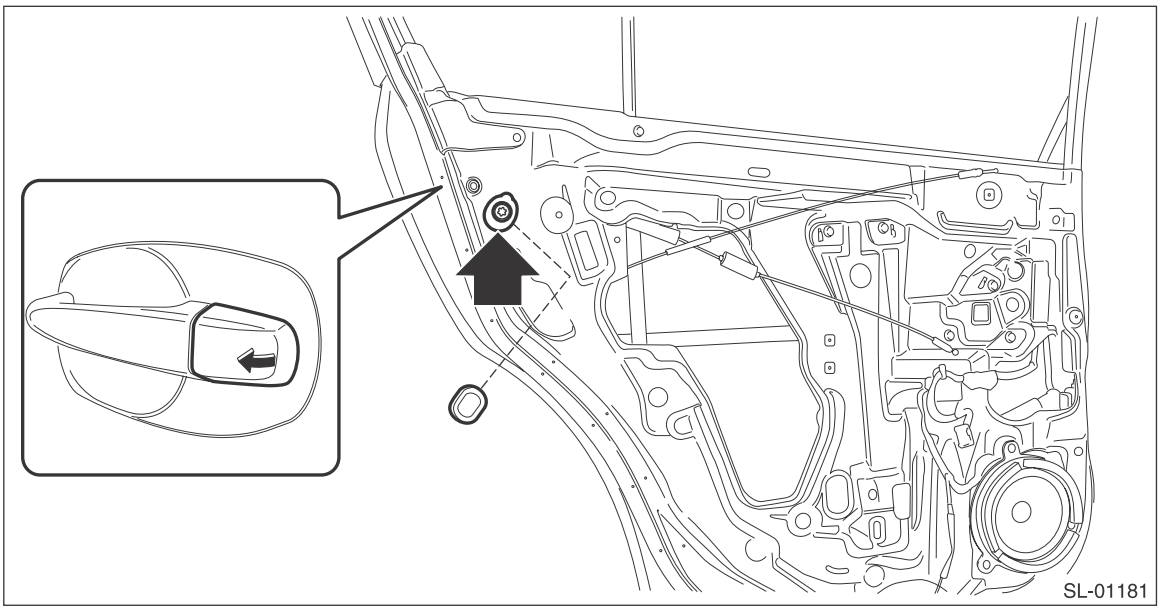

6) Remove the rear outer handle by moving it rearward.

CAUTION:
Do not apply excessive force to remove the handle from the door panel. The door panel may become deformed.

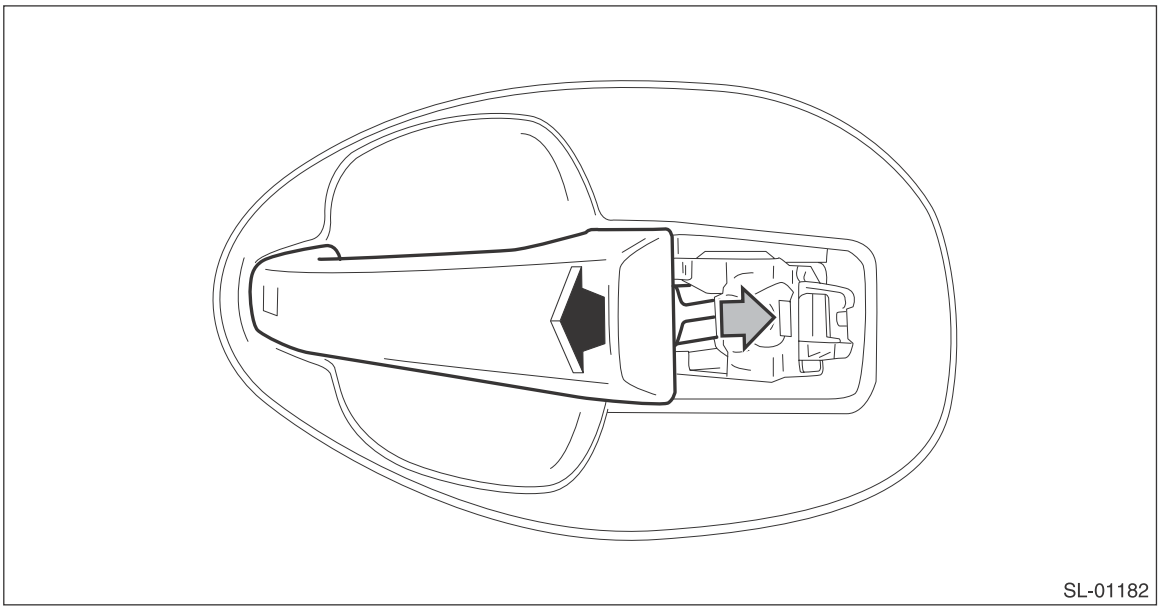

7) Remove the frame assembly.

Preparation tool: TORX® T30

(1) Remove the outer spacer.

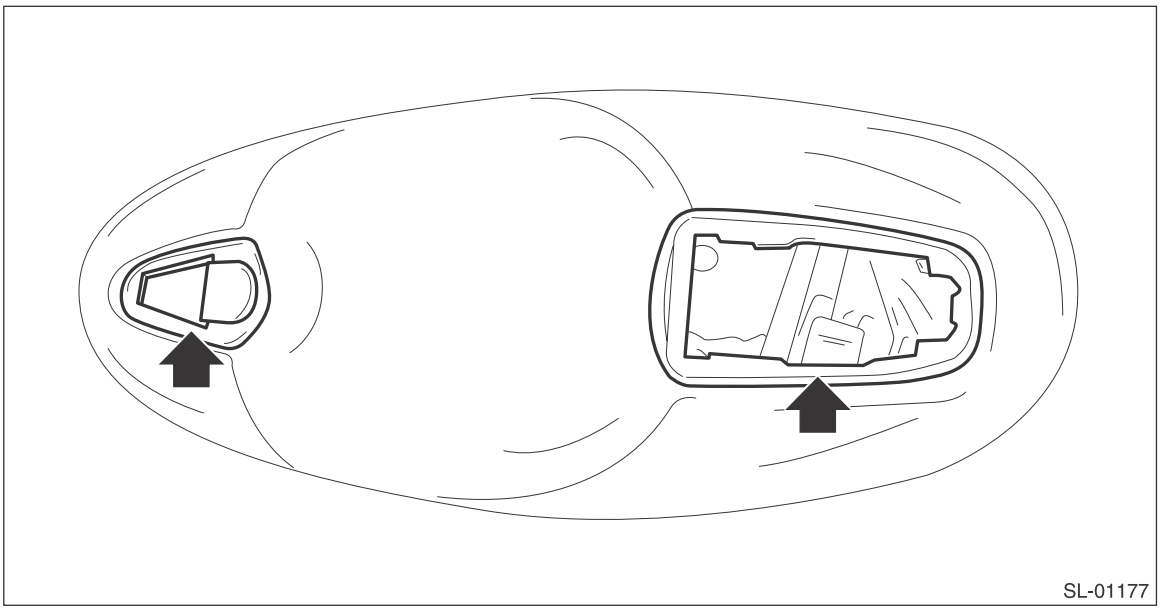

(2) Remove the TORX® bolt and remove the frame assembly from the door panel.

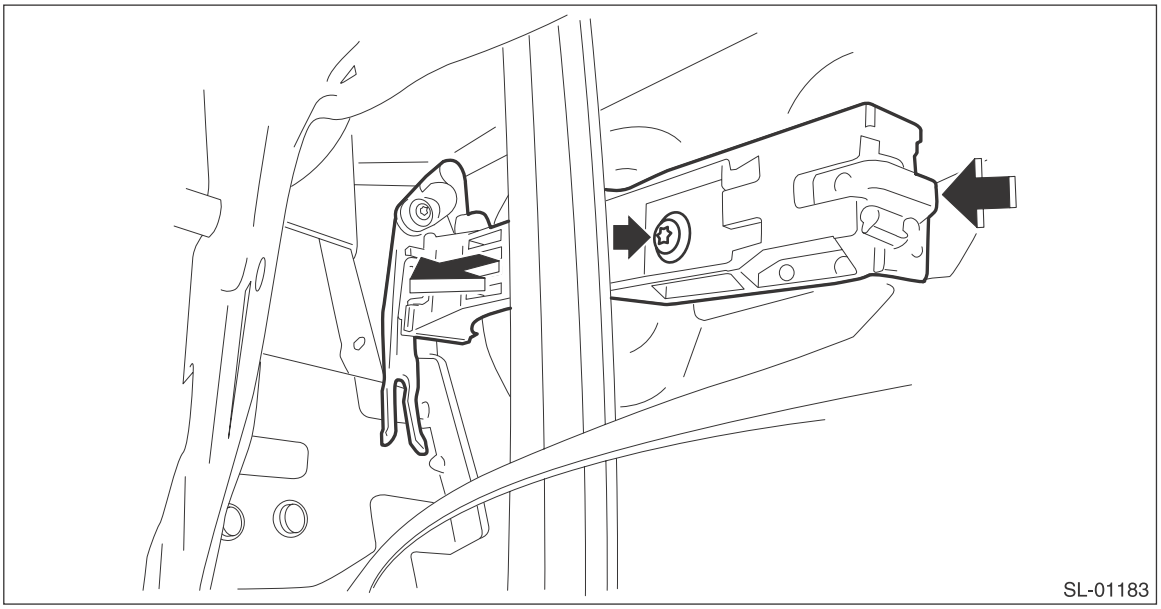

B: INSTALLATION

1) Before installation, check the following items.
- Rod is free from deformation.
- Grease is applied sufficiently to rod joints.

If grease is insufficient, add it as necessary before assembling the rod.
2) Install each part in the reverse order of removal.

Tightening torque:
Refer to "COMPONENT" of "General Description". <Ref. to SL-2, DOOR LOCK ASSEMBLY, COMPONENT, General Description.>

C: INSPECTION

1) Check if the rear outer handle operates normally.
- If the lever is faulty, replace the rear outer handle.
- If the rod is deformed, replace the rear door latch & door lock actuator assembly.

11.Rear Door Latch and Door Lock Actuator Assembly

A: REMOVAL

1) Disconnect the ground cable from battery.
2) Remove the rear door trim. <Ref. to EI-60, REMOVAL, Door Trim.>
3) Remove the sealing cover.

CAUTION:
- **Carefully remove the butyl tape. Excessive force will easily break the cover.**
- **If the sealing cover gets broken, replace it with a new part.**

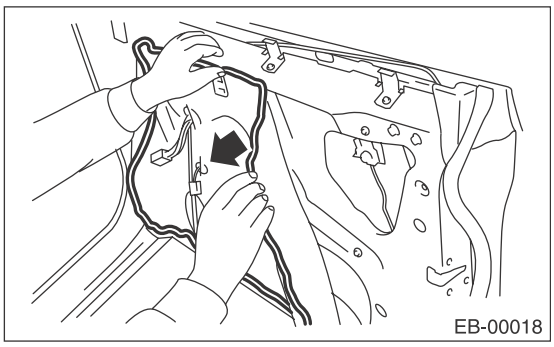

4) Remove the rear door glass. <Ref. to GW-32, REMOVAL, Rear Door Glass.>
5) Remove the rear door latch and door lock actuator assembly.
   (1) Disconnect the connector.
   (2) Remove the screws, and remove the rear door latch & door lock actuator assembly.

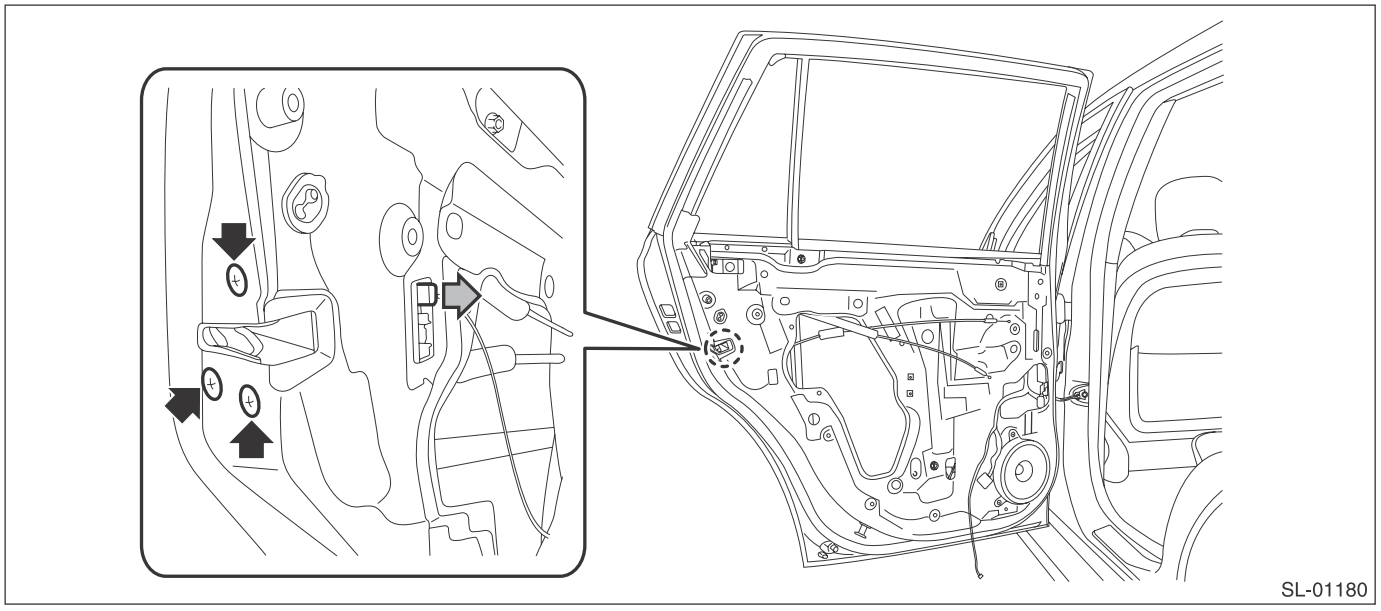

B: INSTALLATION

1) Before installation, check the following items.
- Cable and rod are free from deformation.
- Grease is applied sufficiently to rod joints.

If grease is insufficient, add it as necessary before assembling the rod.
2) Install each part in the reverse order of removal.

Tightening torque:
Refer to "COMPONENT" of "General Description". <Ref. to SL-2, DOOR LOCK ASSEMBLY, COMPONENT, General Description.>

NOTE:
After installation, make sure that the child safety lock works correctly.

C: INSPECTION

1. REAR DOOR LATCH

Check if the rear door latch operates normally.
If the cable or rod is faulty, replace the front door latch & door lock actuator assembly.

2. REAR DOOR LOCK ACTUATOR

1) Disconnect the rear door lock actuator connector.
2) Check the door lock operation by applying battery voltage between the terminals of rear door lock actuator.

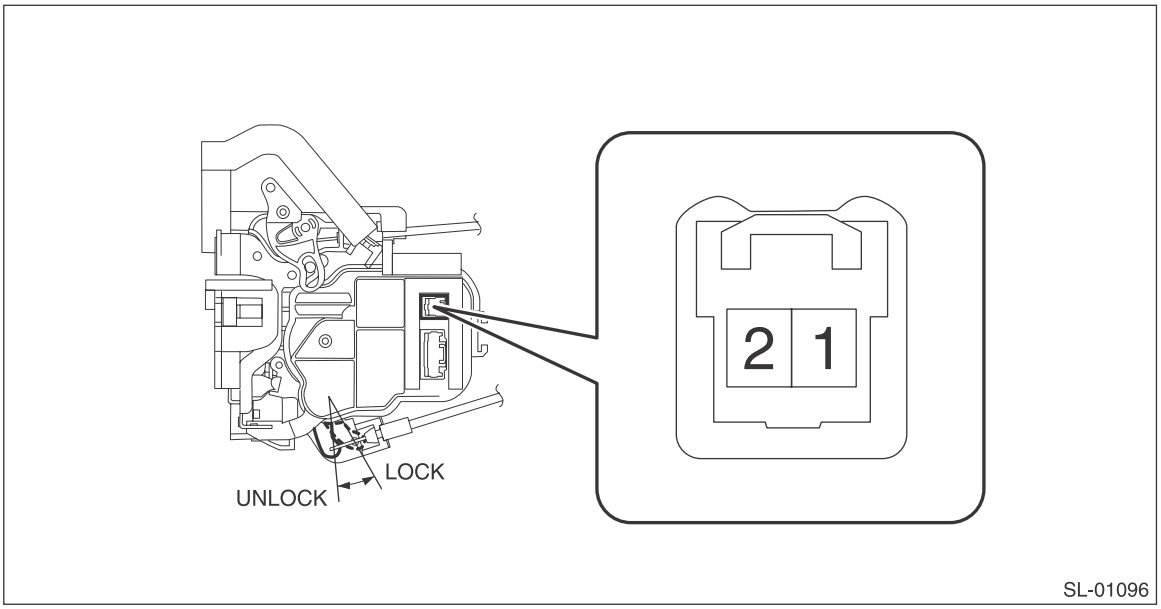

Inspection conditions	Terminal No.	
	1	2
LOCK → UNLOCK	–	+
UNLOCK → LOCK	+	–

3) If the actuator does not operate normally, replace the rear door latch & door lock actuator assembly.

12.Rear Gate Opener Button

A: REMOVAL

NOTE:
The rear gate opener button is integrated into the license plate light assembly harness.
1) Remove the rear gate trim. <Ref. to EI-160, REMOVAL, Rear Gate Trim.>
2) Remove the rear gate garnish. <Ref. to EI-164, REMOVAL, Rear Gate Garnish.>
3) Remove the rear gate opener button.
(1) Release the locks at both ends of the rear gate opener button by pushing with a flat tip screwdriver.

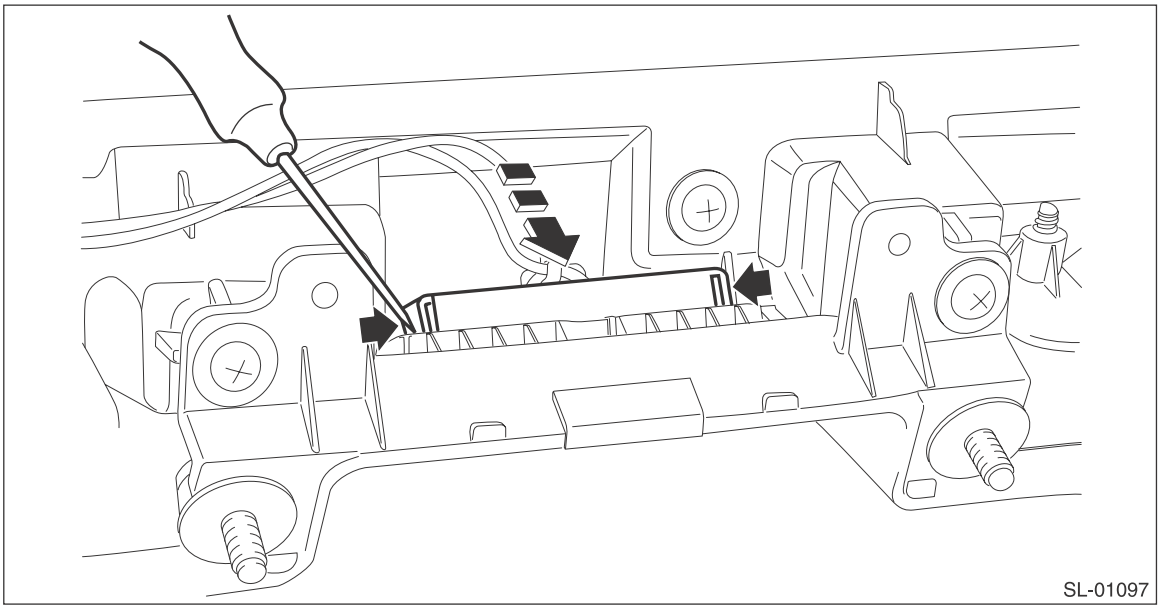
SL-01097

(2) Remove the screws and remove the license plate light.

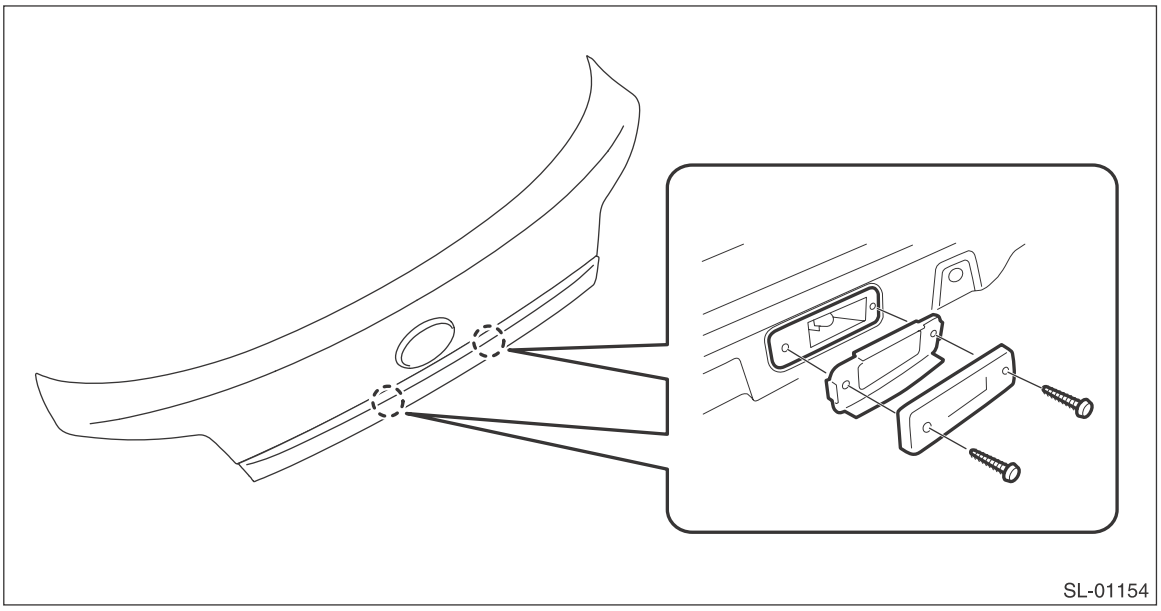
SL-01154

(3) Remove the license plate light assembly harness from the rear gate garnish.

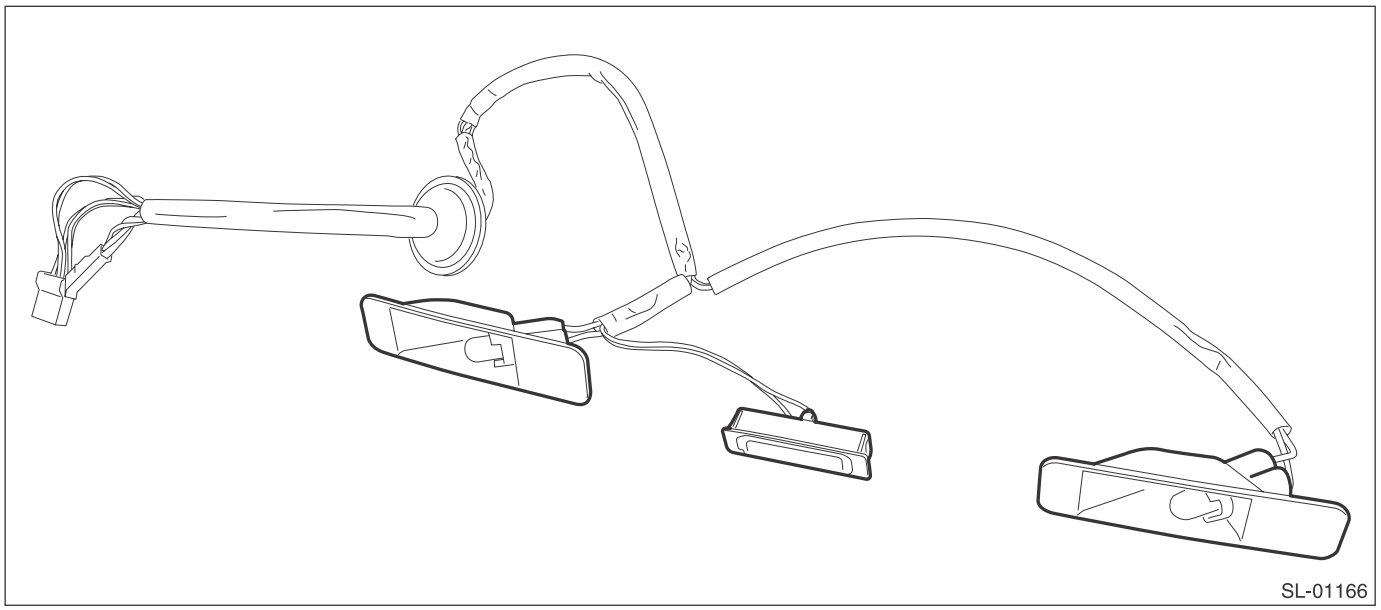

B: INSTALLATION

CAUTION:
Make sure that the harness grommet is installed securely.
Incomplete installation causes water leak.
Install each part in the reverse order of removal.

C: INSPECTION

1) Disconnect the rear gate opener button connector.
2) Measure the resistance between rear gate opener button terminals.

Preparation tool: Circuit tester

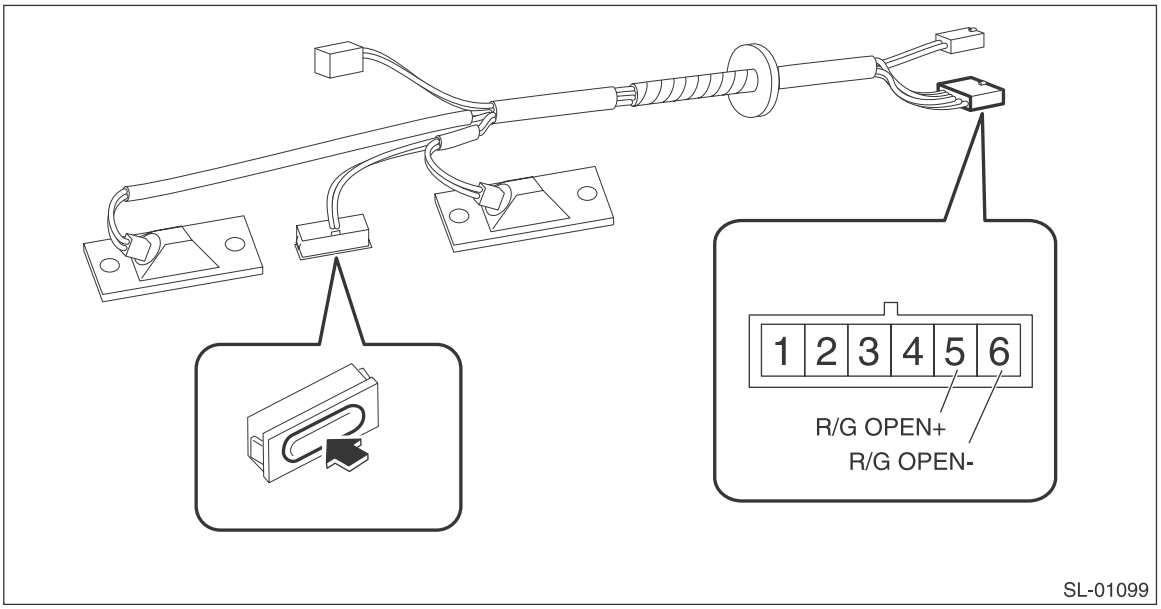

Terminal No.	Inspection conditions	Specification
5 — 6	Open	Less than 1 Ω
	Close	1 MΩ or more

3) Replace the rear gate opener button if the inspection result is not within the standard value.

13.Trunk Opener Switch

A: REMOVAL

1. TRUNK OPENER SWITCH

1) Remove the instrument panel lower cover. <Ref. to EI-63, REMOVAL, Instrument Panel Lower Cover.>
2) Release the claws and remove the trunk opener button.

NOTE:
The trunk opener button is integrated with the VDC OFF switch.

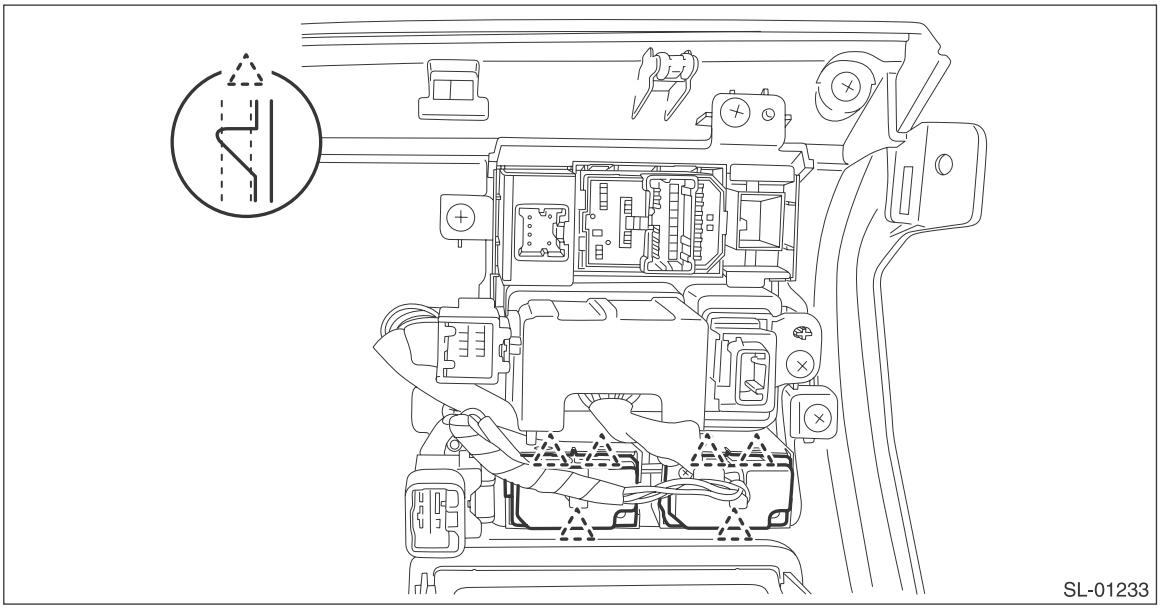

2. TRUNK OPENER CANCEL BUTTON

1) Remove the glove box. <Ref. to EI-65, REMOVAL, Glove Box.>
2) Release the claws and remove the trunk opener cancel button.

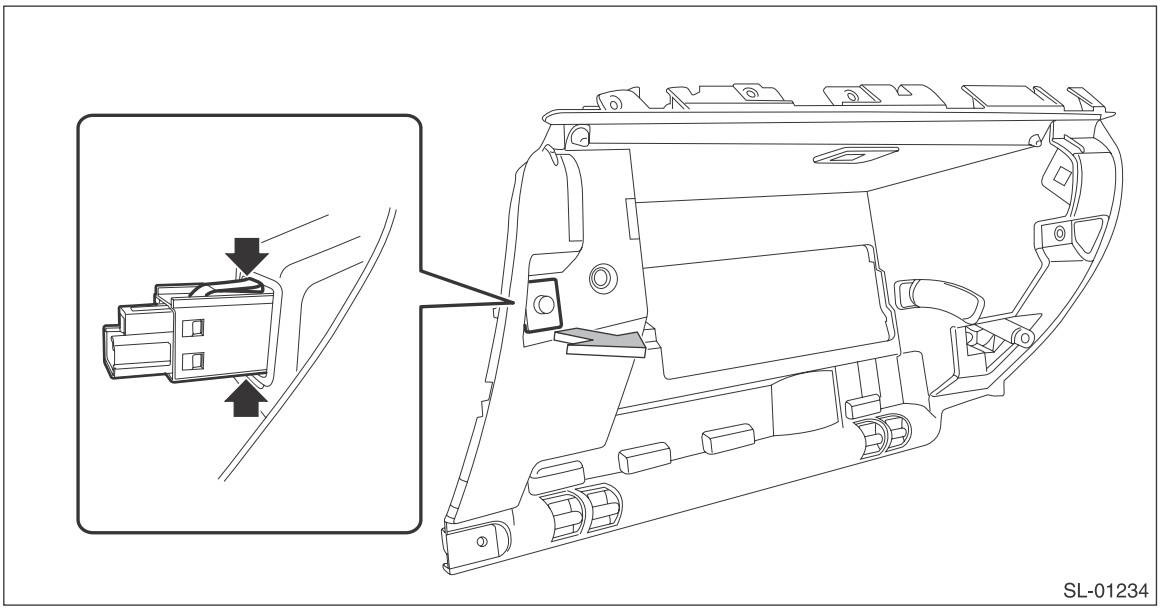

B: INSTALLATION

Install each part in the reverse order of removal.

C: INSPECTION

1. TRUNK OPENER SWITCH

1) Disconnect the trunk opener button connector.
2) Measure the resistance between trunk opener button terminals.

Preparation tool: Circuit tester

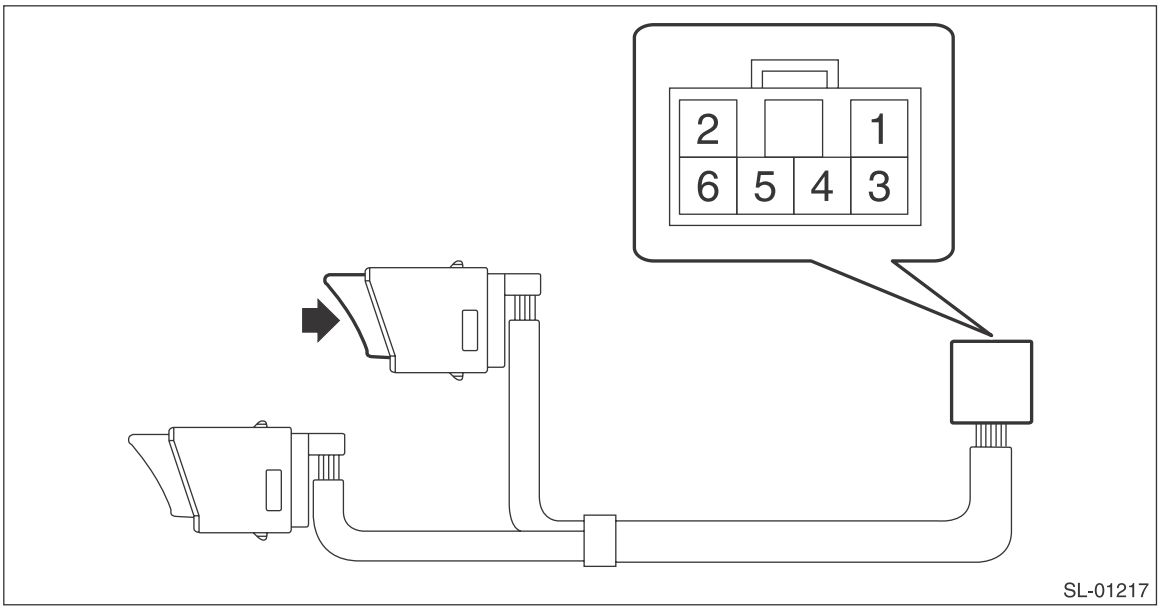

Terminal No.	Inspection conditions	Specification
4 — 2	Open	Less than 1 Ω
	Close	1 MΩ or more

3) Replace the trunk opener button if the inspection result is not within the standard value.

2. TRUNK OPENER CANCEL BUTTON

1) Disconnect the trunk opener cancel button connector.
2) Measure the resistance between trunk opener cancel button terminals.

Preparation tool: Circuit tester

Terminal No.	Inspection conditions	Specification
1 — 2	Switch ON	Less than 1 Ω
	Switch OFF	1 MΩ or more

3) Replace the trunk opener button if the inspection result is not within the standard value.

14.Rear Gate Latch and Actuator Assembly

A: REMOVAL

1) Disconnect the ground cable from battery.
2) Remove the rear gate trim. <Ref. to EI-160, REMOVAL, Rear Gate Trim.>
3) Remove the rear gate latch & actuator assembly.
   (1) Remove the bolts and pull out the rear gate latch & actuator assembly to the vehicle front.
   (2) Disconnect the connectors, and then remove the rear gate latch & actuator assembly.

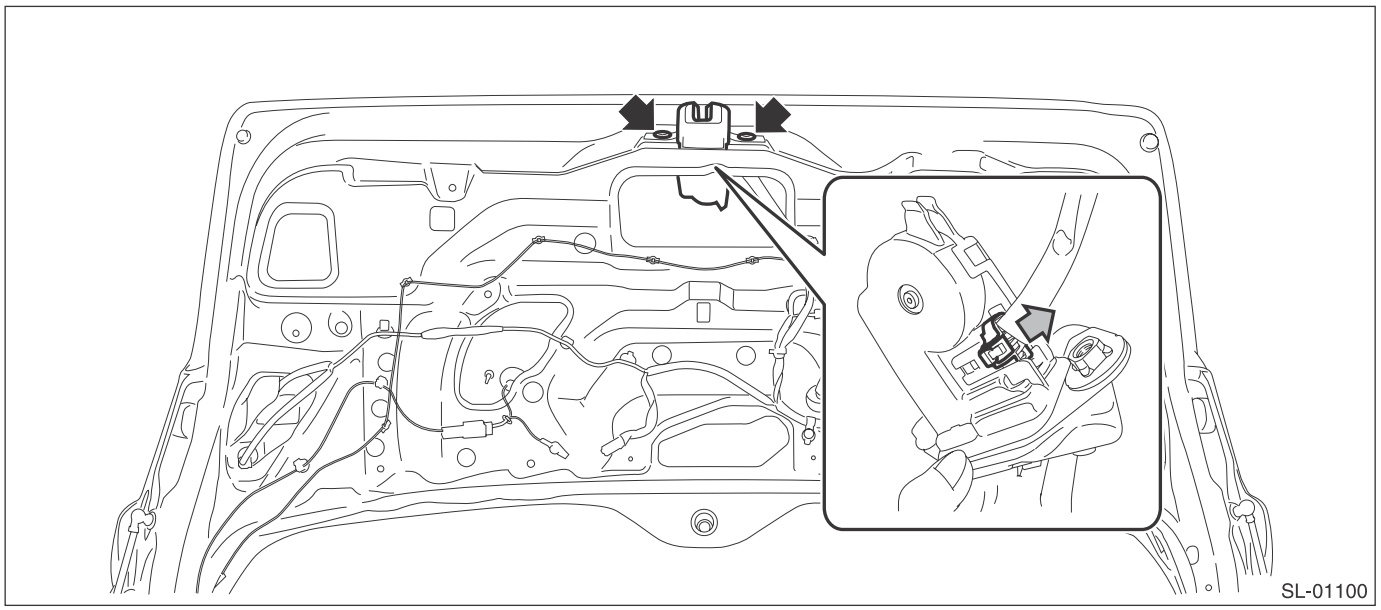

B: INSTALLATION

Install each part in the reverse order of removal.

Tightening torque:
Refer to "COMPONENT" of "General Description". <Ref. to SL-3, REAR GATE LOCK AND TRUNK LID LOCK, COMPONENT, General Description.>

C: INSPECTION

1. REAR GATE LATCH

Check if the rear gate latch operates normally.

- If latch deformation, abnormal wear, or unsmooth lock operation is observed, replace the rear gate latch & actuator assembly.

2. LOCK ACTUATOR

1) Disconnect the rear gate latch & actuator assembly connector.
2) Check the door lock operation by applying battery voltage between the terminals of rear gate latch & actuator.

Preparation tool: Circuit tester

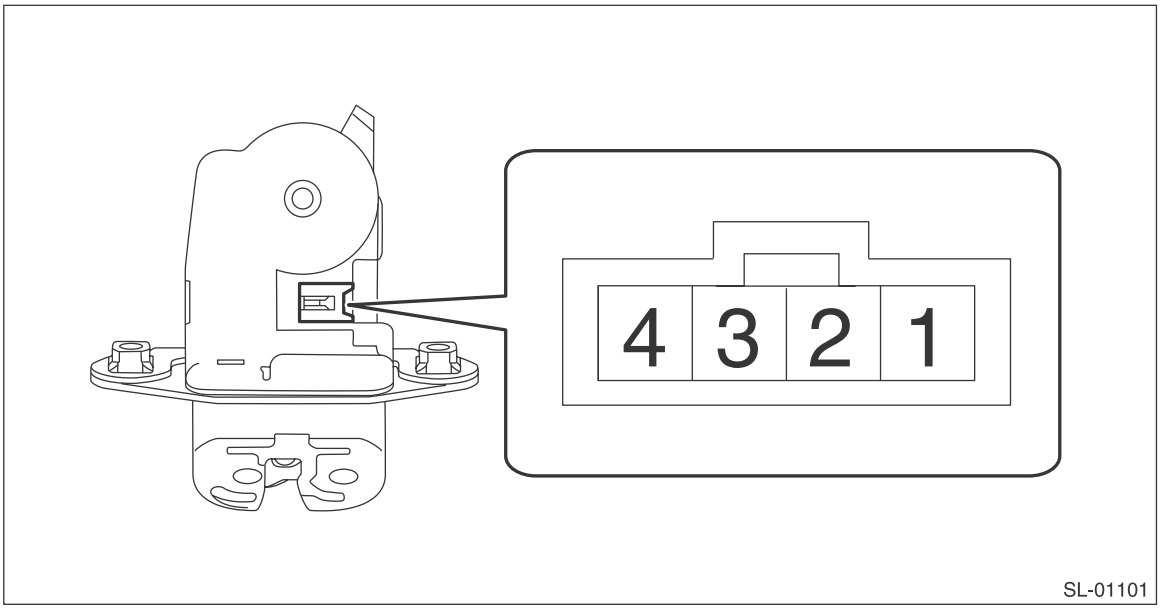

Inspection conditions	Terminal No.	
	1	2
LOCK → UNLOCK	+	–

3) If the actuator does not operate normally, replace the rear gate latch & actuator assembly.

15.Trunk Lid Latch and Actuator Assembly

A: REMOVAL

1) Disconnect the harness connector.
2) Remove the bolts, and remove the trunk lid latch & actuator assembly.

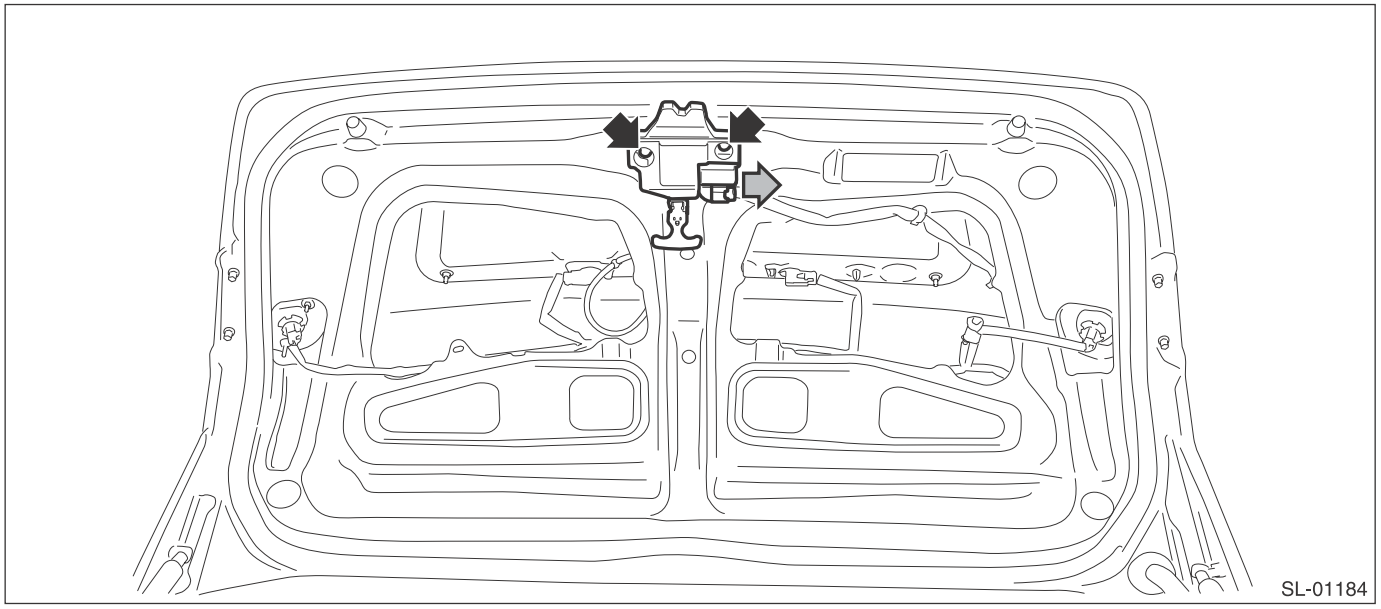

B: INSTALLATION

Install each part in the reverse order of removal.

Tightening torque:
Refer to "COMPONENT" of "General Description". <Ref. to SL-3, REAR GATE LOCK AND TRUNK LID LOCK, COMPONENT, General Description.>

C: INSPECTION

1. TRUNK LID LATCH

Check if the trunk lid latch operates normally.
If latch deformation, abnormal wear, or unsmooth lock operation is observed, replace the rear gate latch & actuator assembly.

2. LOCK ACTUATOR

1) Disconnect the trunk lid latch & actuator assembly connector.
2) Check the door lock operation by applying battery voltage between the terminals of trunk lid latch & actuator.

Preparation tool: Circuit tester

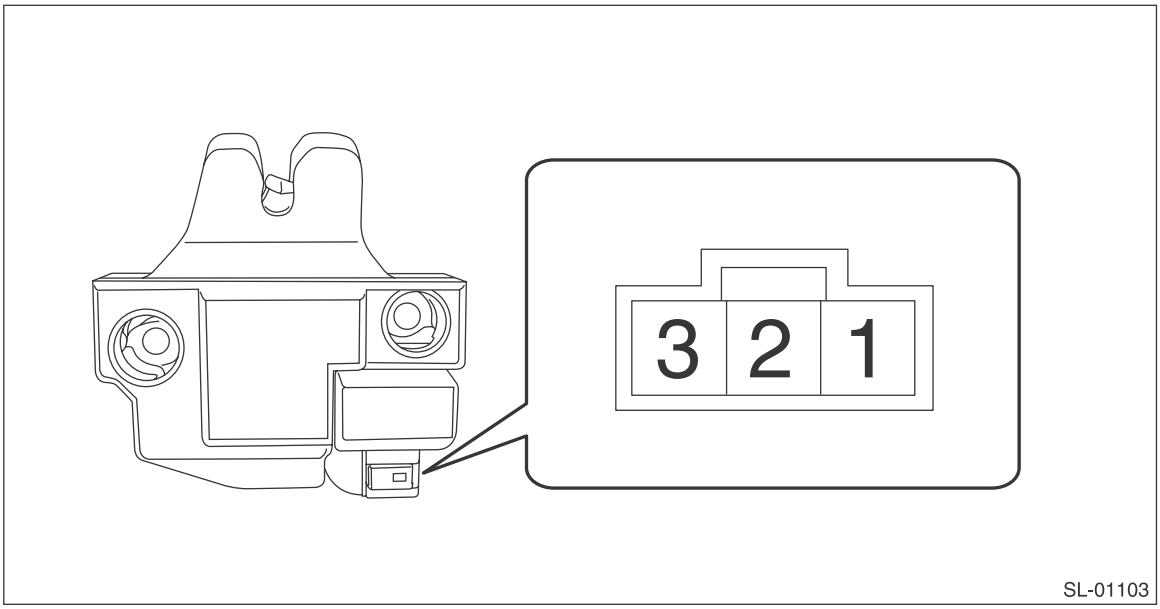

Inspection conditions	Terminal No.	
	1	2
LOCK → UNLOCK	+	–

3) If the actuator does not operate normally, replace the trunk lid latch & actuator assembly

16.Front Hood Lock Assembly

A: REMOVAL

1) Open the front hood.
2) Remove the front bumper face. <Ref. to EI-39, REMOVAL, Front Bumper.>
3) Remove the clips and remove the air intake duct.

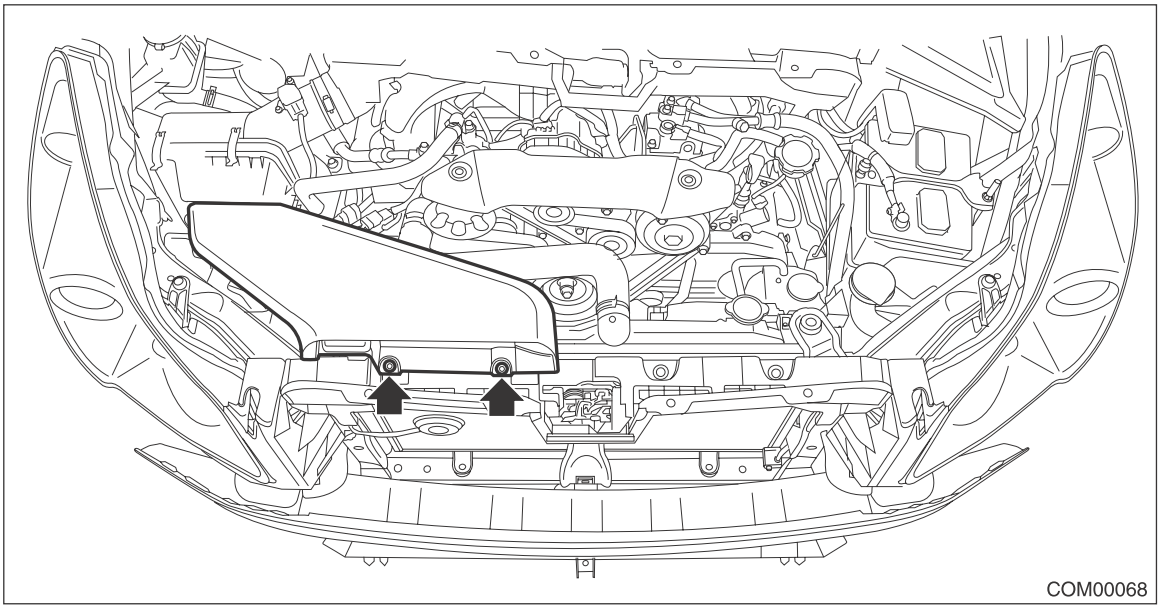

4) Remove the clips and remove the grille bracket.

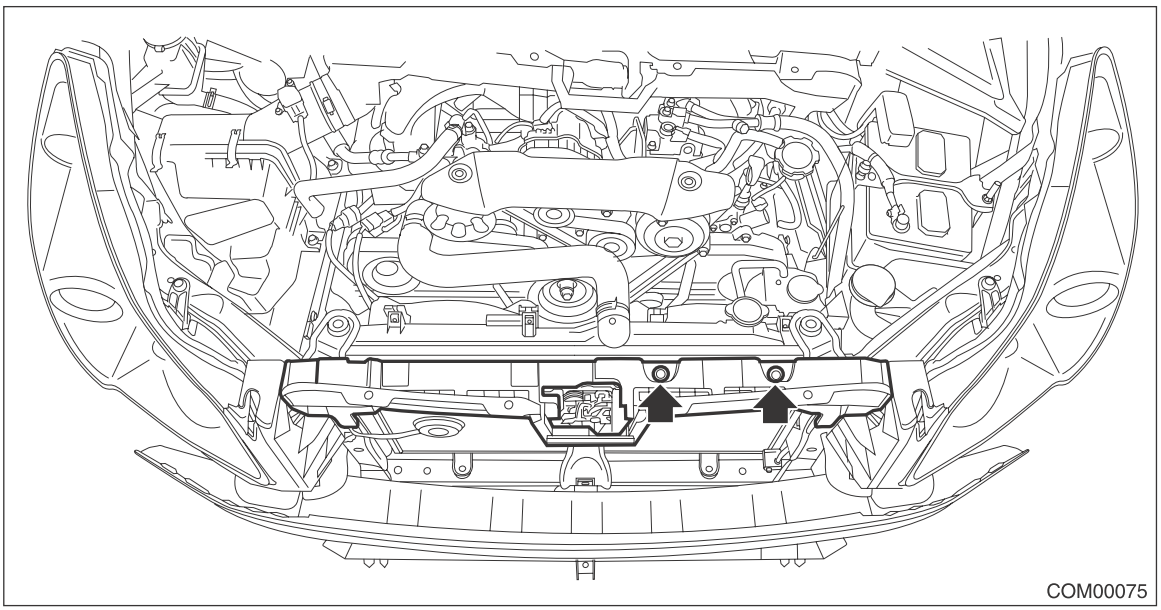

5) Remove the front hood lock assembly.

(1) Remove the bolt.

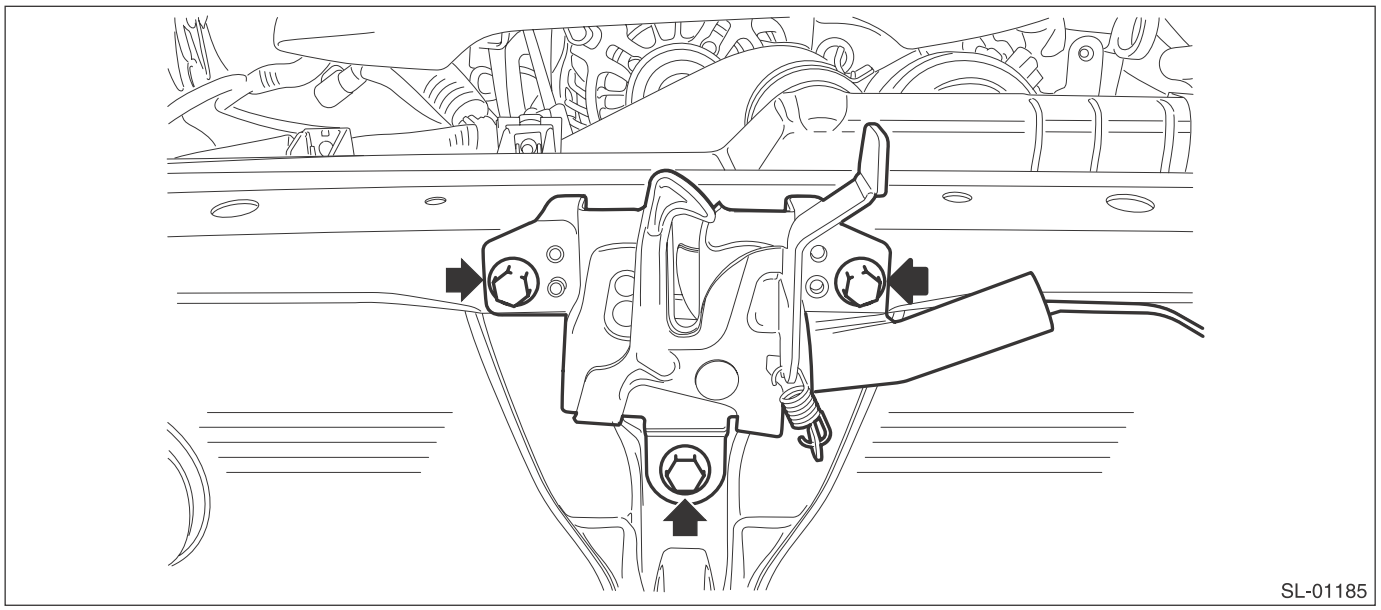

(2) Remove the release cable, and detach the front hood lock assembly.

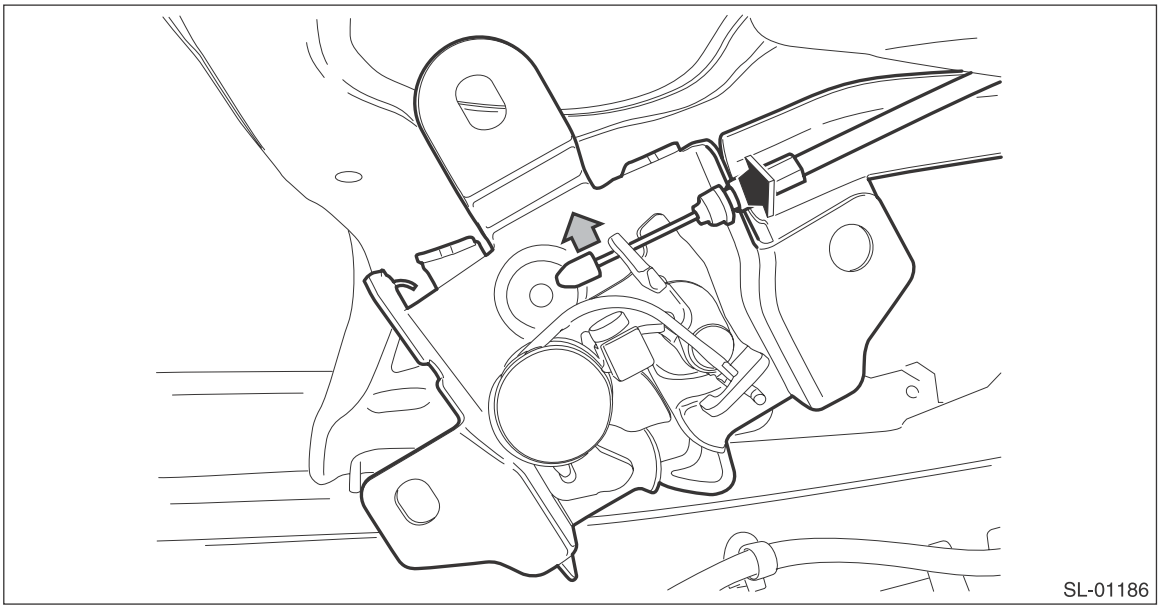

B: INSTALLATION

1) Before installation, check the following items.
- Grease is applied sufficiently to cable joints.

If grease is insufficient, add it as necessary before assembling the cable.
2) Install each part in the reverse order of removal.

Tightening torque:
Refer to "COMPONENT" of "General Description". <Ref. to SL-4, FRONT HOOD LOCK AND REMOTE OPENERS, COMPONENT, General Description.>

C: ADJUSTMENT

1) Loosen the bolt, and adjust the lock assembly while moving it up and down.

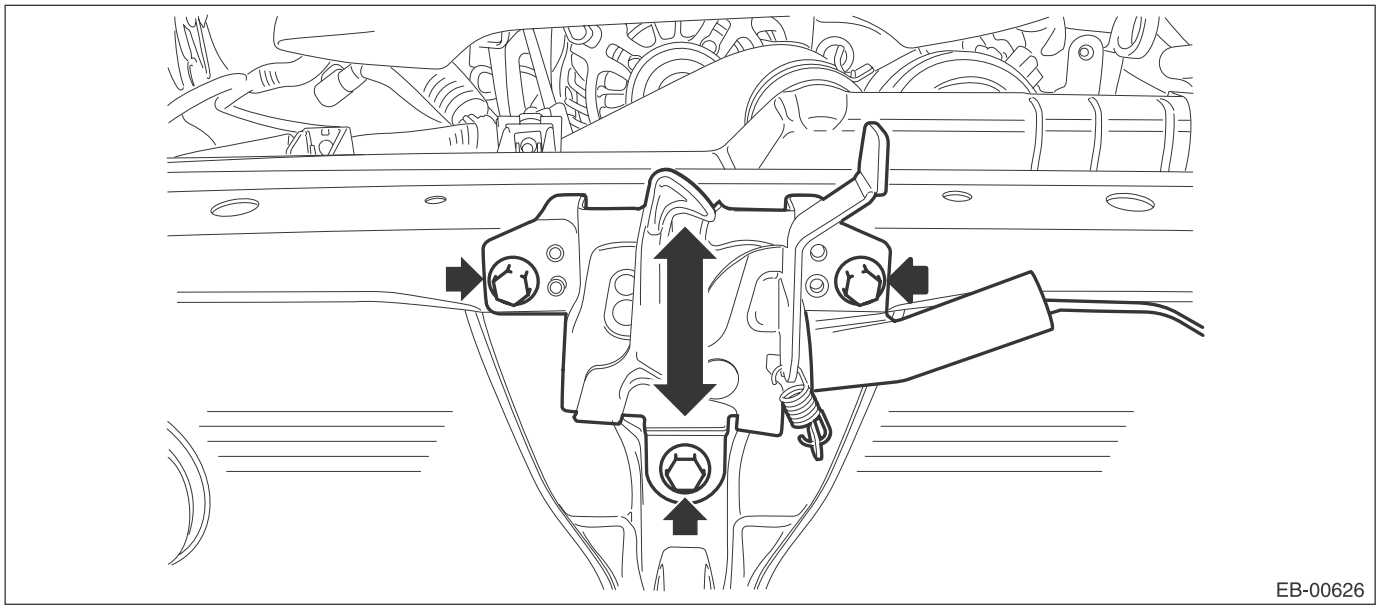

2) After adjustment, tighten the bolts securely.

Tightening torque:
Refer to "COMPONENT" of "General Description". <Ref. to SL-4, FRONT HOOD LOCK AND REMOTE OPENERS, COMPONENT, General Description.>

D: INSPECTION

Check if the front hood lock ASSY operates normally.
If latch deformation, abnormal wear, or unsmooth lock operation is observed, replace the front hood lock assembly.

17.Remote Openers

A: REMOVAL

1. FRONT HOOD OPENER

1) Remove the opener lever.
   (1) Remove the cable.
   (2) Remove the nut, and detach the opener lever.

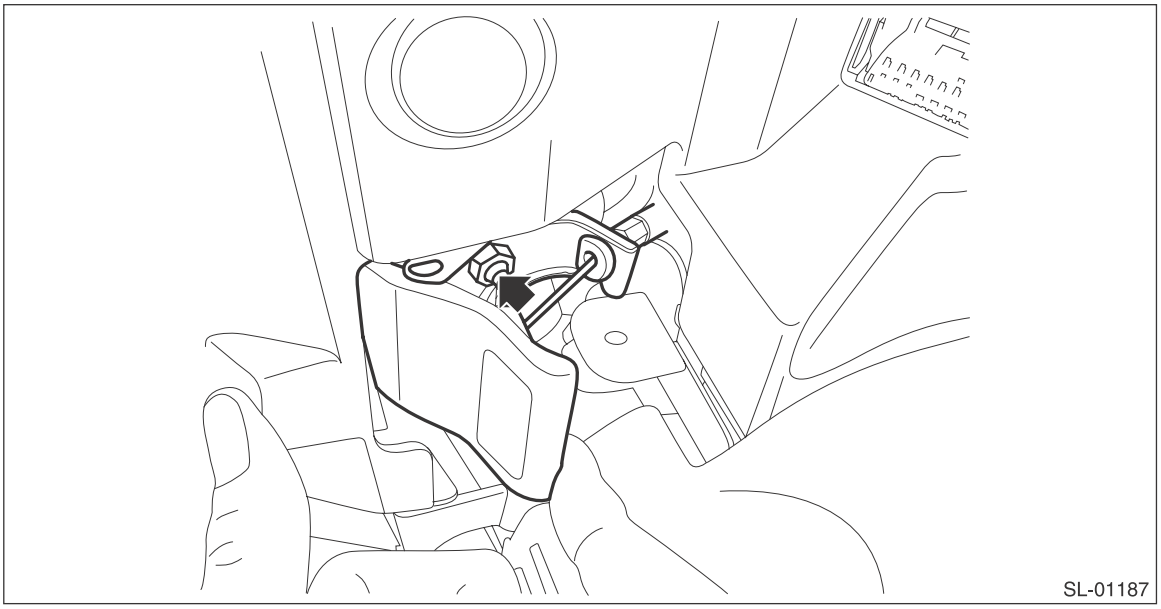

2) Remove the following parts and remove the cable clip and cable.
- Front hood lock ASSY:<Ref. to SL-52, REMOVAL, Front Hood Lock Assembly.>
- Instrument panel lower cover:<Ref. to EI-63, REMOVAL, Instrument Panel Lower Cover.>

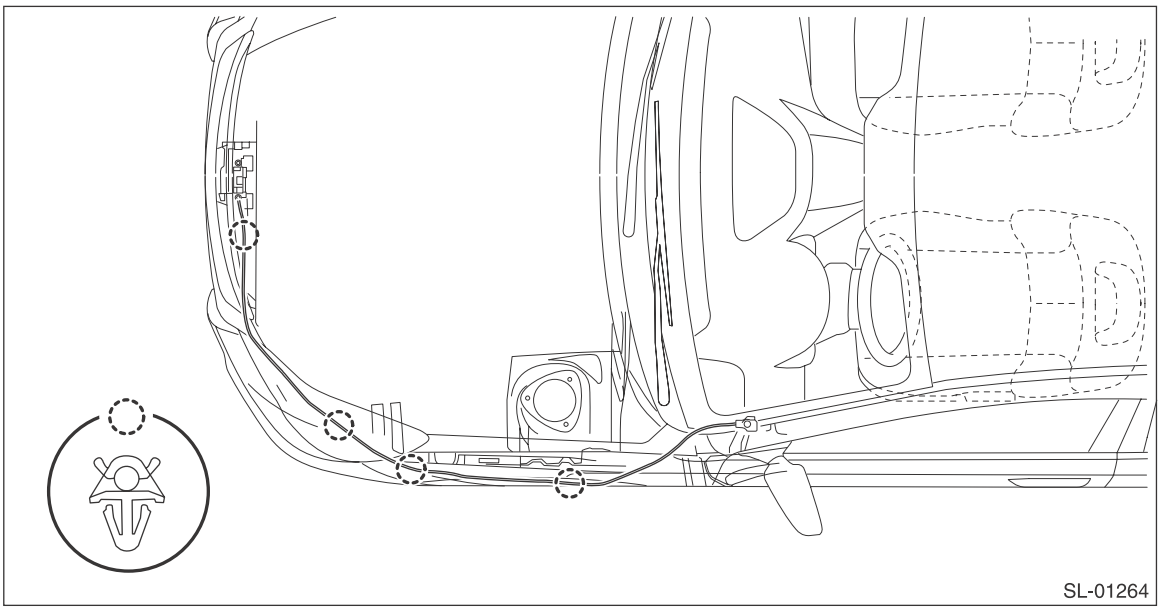

2. FUEL FLAP OPENER

1) Remove the pull handle cover.
   (1) Open the cover by using a flat tip screwdriver.
   (2) Remove the screw and remove the pull handle cover.

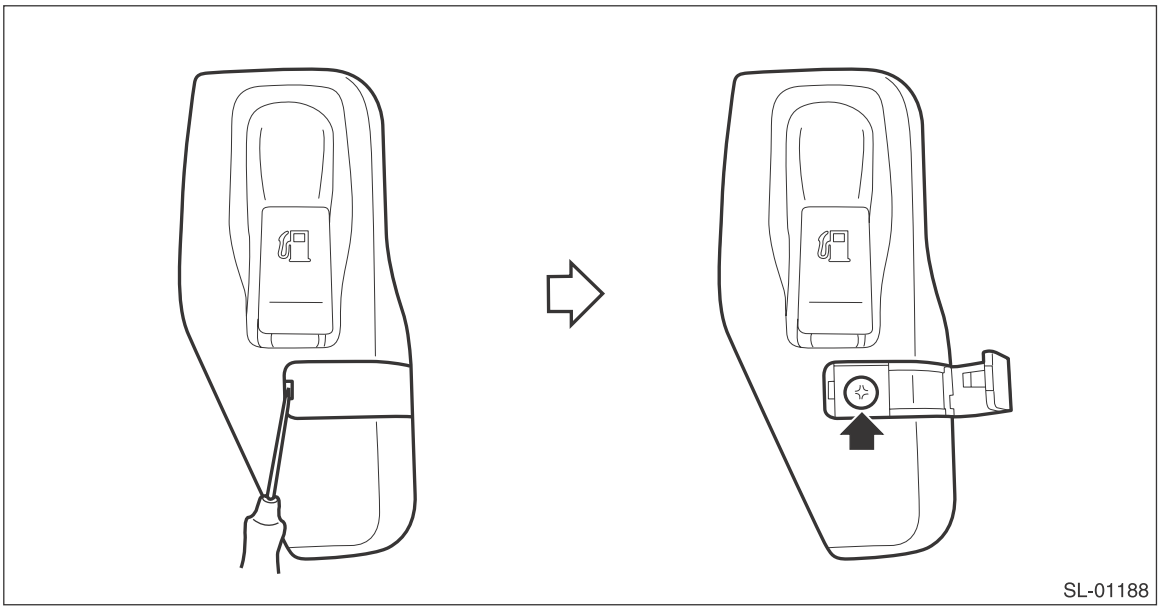

2) Remove the opener handle.
   (1) Remove the nuts.
   (2) Remove the cable from opener pull handle.

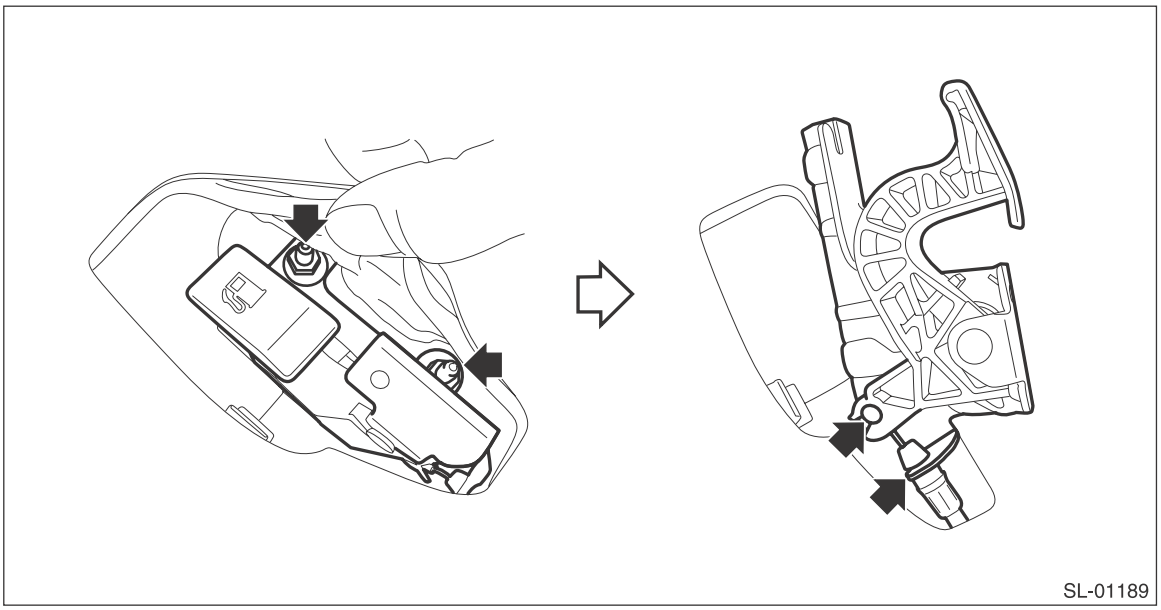

3) Remove the rear quarter trim RH. (OUTBACK model) <Ref. to EI-114, OUTBACK MODEL, REMOVAL, Rear Quarter Trim.>
4) Remove the trunk room trim (RH). (Sedan model) <Ref. to EI-127, TRUNK ROOM TRIM, REMOVAL, Trunk Room Trim.>
5) Remove the fuel lock inside the quarter panel.
   (1) Press the claws of the fuel lock.

(2) While keeping the condition in step (1), pull the fuel lock to the rearward of the vehicle.

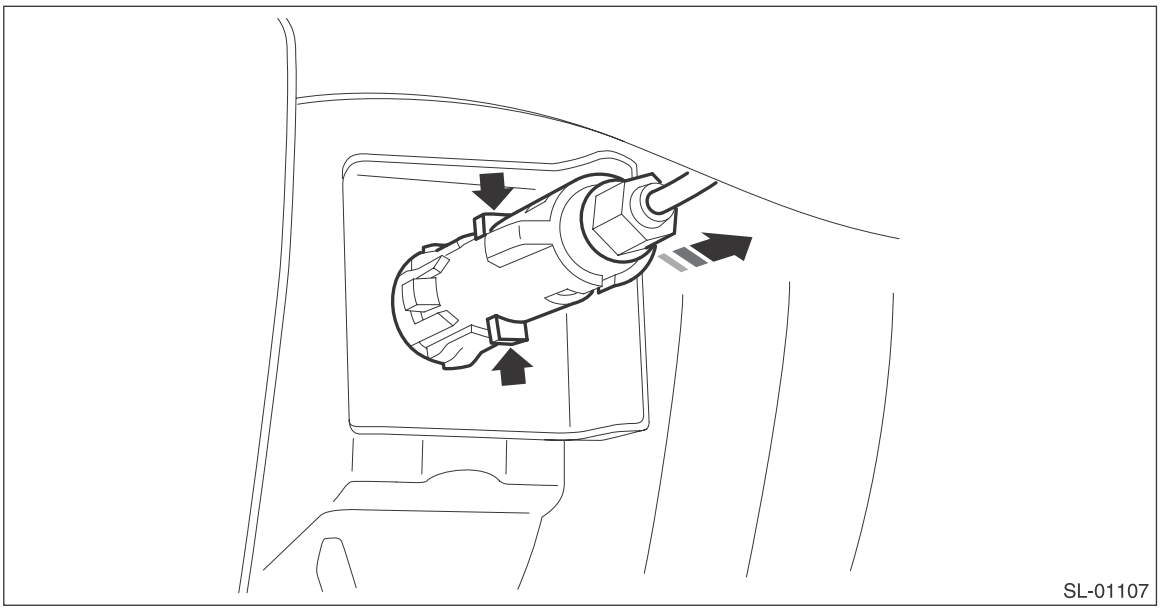

6) Remove the lower inner trim. <Ref. to EI-95, REMOVAL, Lower Inner Trim.>
7) Remove the cable clip, and remove the cable.

- Sedan model

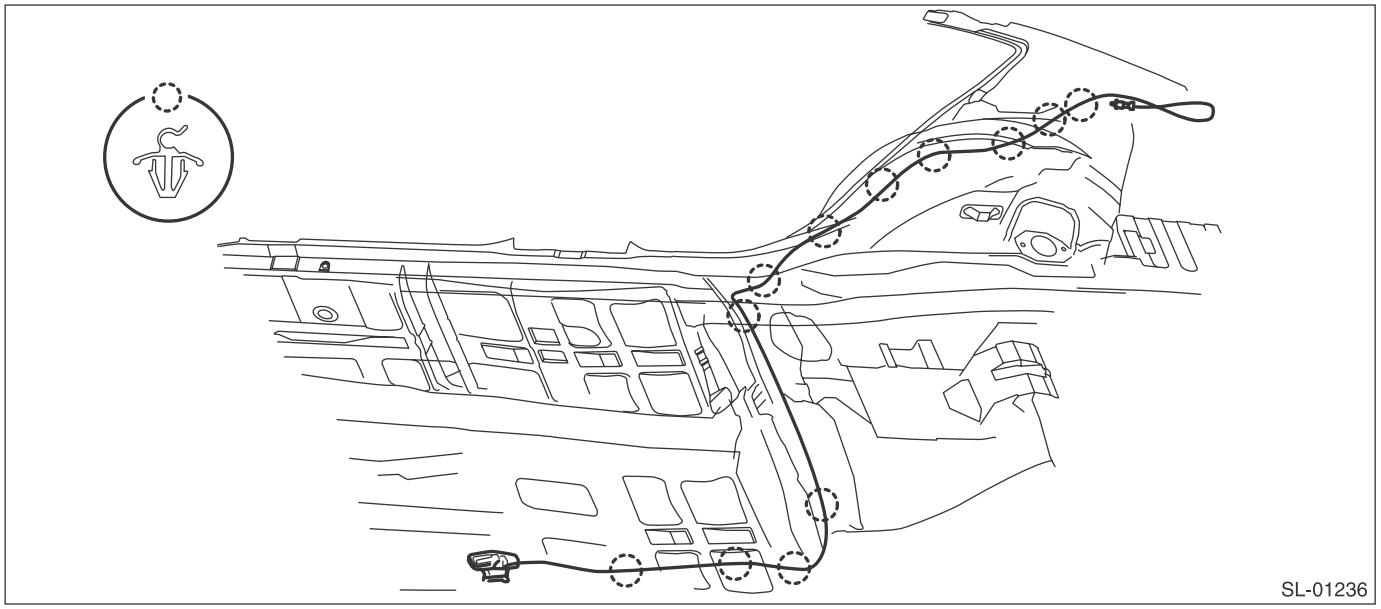

- OUTBACK model

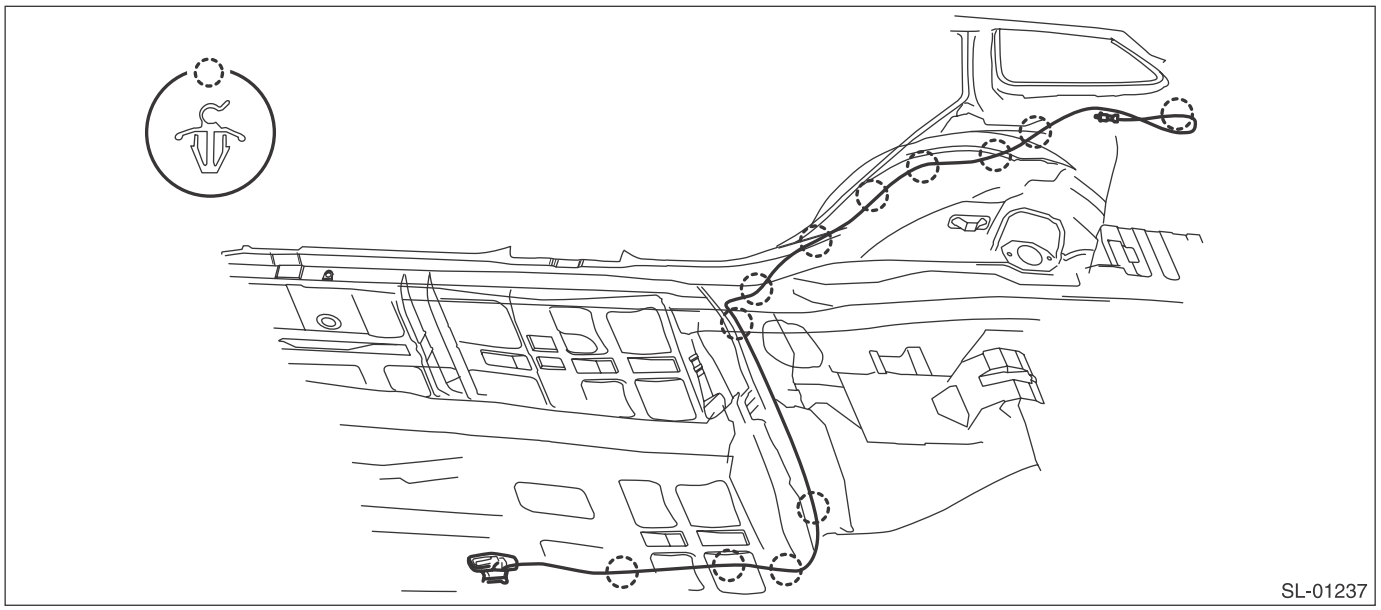

B: INSTALLATION

1) Before installation, check the following items.
- Cable is free from deformation such as fray.

2) Install each part in the reverse order of removal.

Tightening torque:
Refer to "COMPONENT" of "General Description". <Ref. to SL-4, FRONT HOOD LOCK AND REMOTE OPENERS, COMPONENT, General Description.>

C: INSPECTION

Check if the front hood and fuel flap operate normally.

18.Ignition Key Lock

A: REPLACEMENT

1) Disconnect the ground cable from battery.
2) Remove the steering column. <Ref. to PS-20, REMOVAL, Steering Column.>
3) Remove the ignition key lock.
   (1) Secure the steering column in a vise.
   (2) Drill out the bolts and remove the ignition key lock.

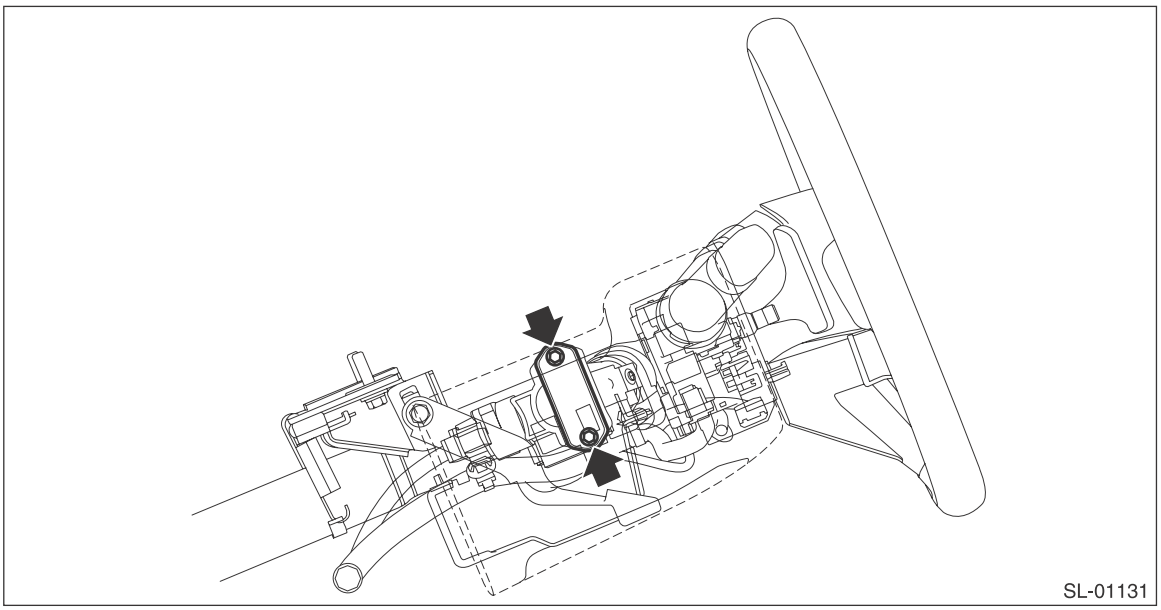

4) Install the ignition key lock.
   (1) Secure the ignition key lock to the steering column.
   (2) Use new bolts. Tighten the bolt until the bolt head is broken (bolt head wrenched off).

B: INSPECTION

1) Disconnect the ignition switch connector.
2) Measure the resistance between ignition switch terminals.

Preparation tool: Circuit tester

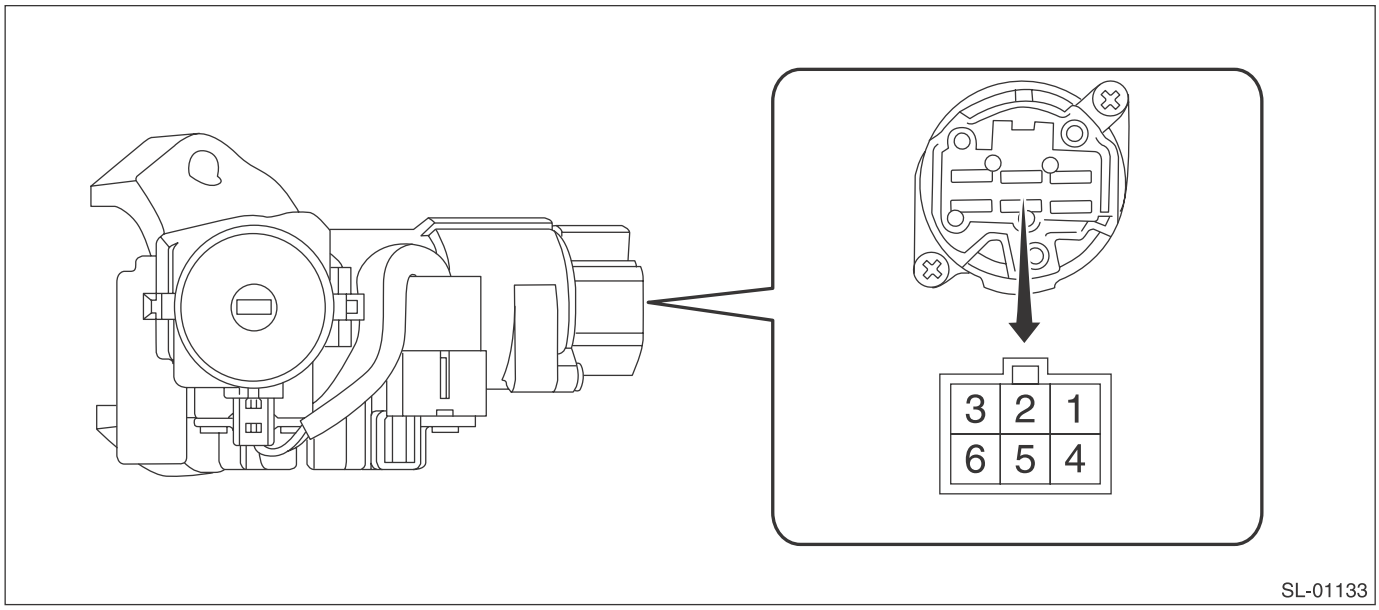

Terminal No.	Inspection Conditions	Specification
—	LOCK	—
3 — 5	ACC	Less than 1 Ω
3 — 1, 4 3 — 5	ON	Less than 1 Ω
3 — 2, 6 3 — 1, 4	ST	Less than 1 Ω

3) Replace the ignition switch if the inspection result is not within the standard value.

19.Key Lock Cylinders

A: REPLACEMENT

1. FRONT DOOR

1) Raise the front door glass to the top position.
2) Remove the door trim. <Ref. to EI-60, FRONT DOOR, REMOVAL, Door Trim.>
3) Remove the sealing cover.

CAUTION:
- **Carefully remove the butyl tape. Excessive force will easily break the cover.**
- **If the sealing cover gets broken, replace it with a new part.**

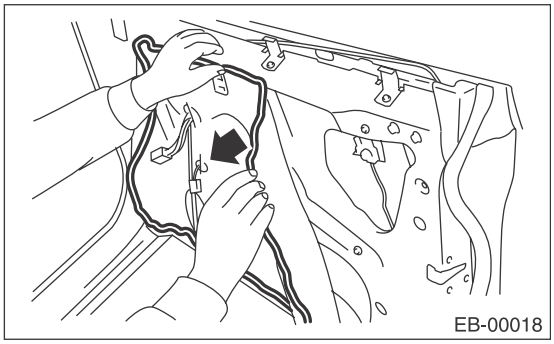

4) Release the rod from the rod clamp of outer handle.

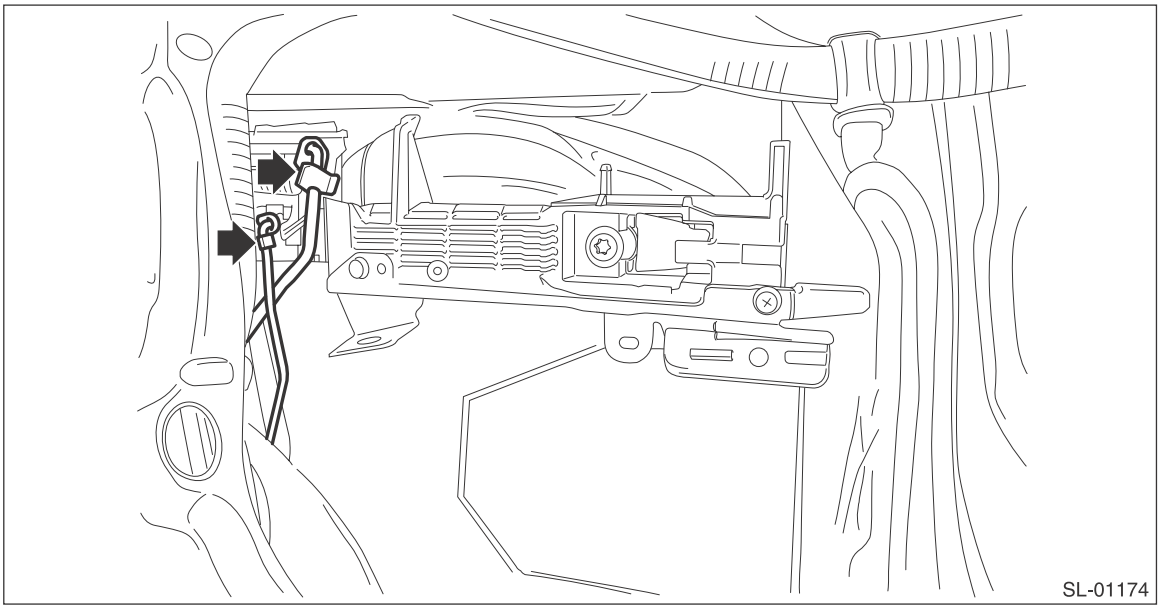

5) Remove the door outer handle cover.

Preparation tool: TORX® T30

(1) Remove the plug to the rear of the door panel.

(2) Loosen the TORX® bolt and remove the door outer handle cover.

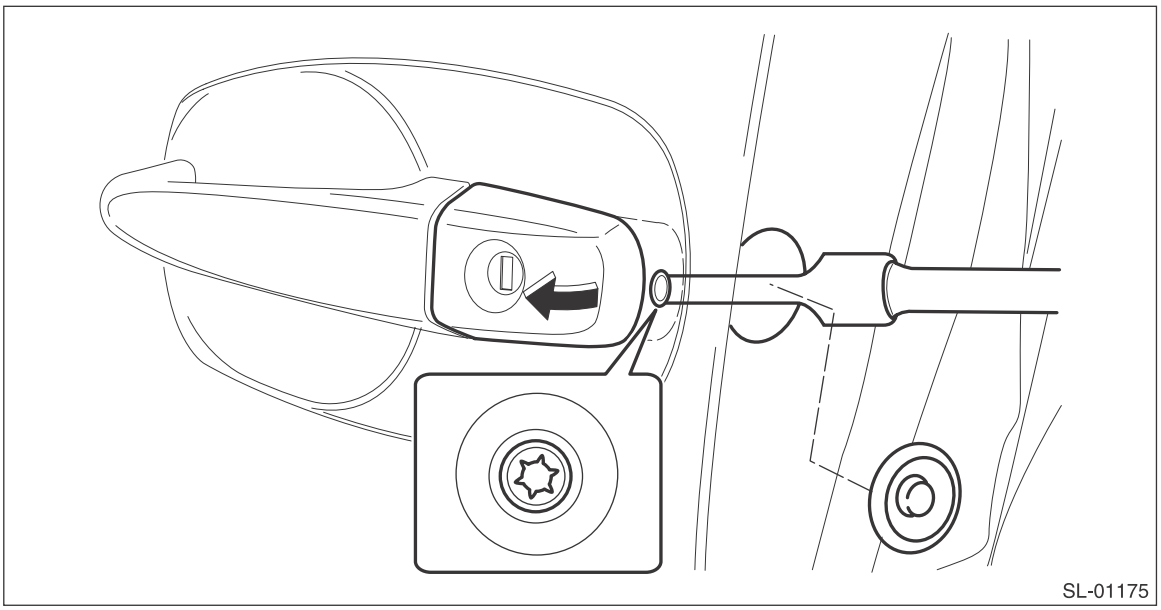

6) Remove the key cylinder from the door outer handle cover, and replace the key cylinder.

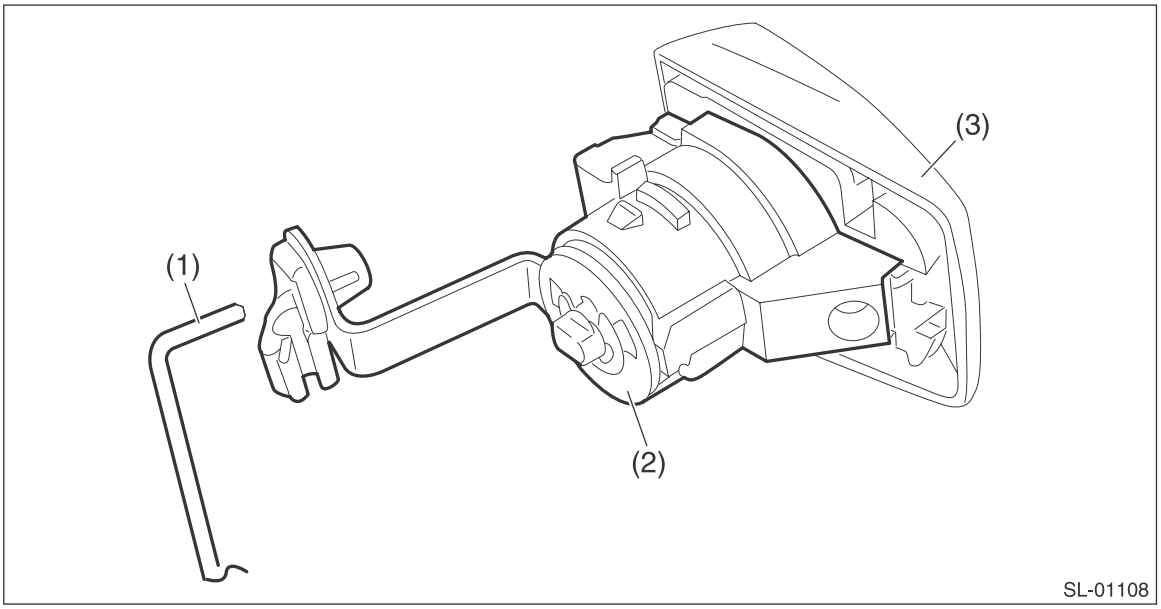

(1) Latch connection rod
(2) Key cylinder
(3) Door outer handle cover (driver's seat only)

Tightening torque:
Refer to "COMPONENT" of "General Description". <Ref. to SL-2, DOOR LOCK ASSEMBLY, COMPONENT, General Description.>

2. TRUNK LID

1) Remove the trunk lid trim. <Ref. to EI-127, TRUNK LID TRIM, REMOVAL, Trunk Room Trim.>
2) Remove the key cylinder.
   (1) Remove the cable (1), clip (2) and bolt (3).

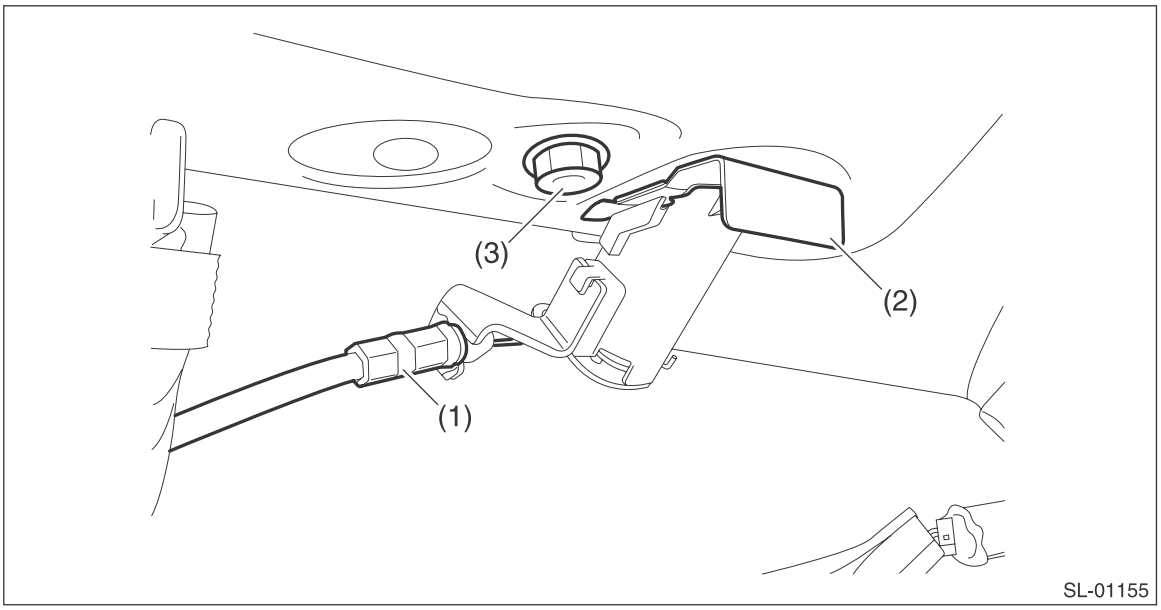

   (2) Remove the key cylinder from the trunk lid, and replace the key cylinder.

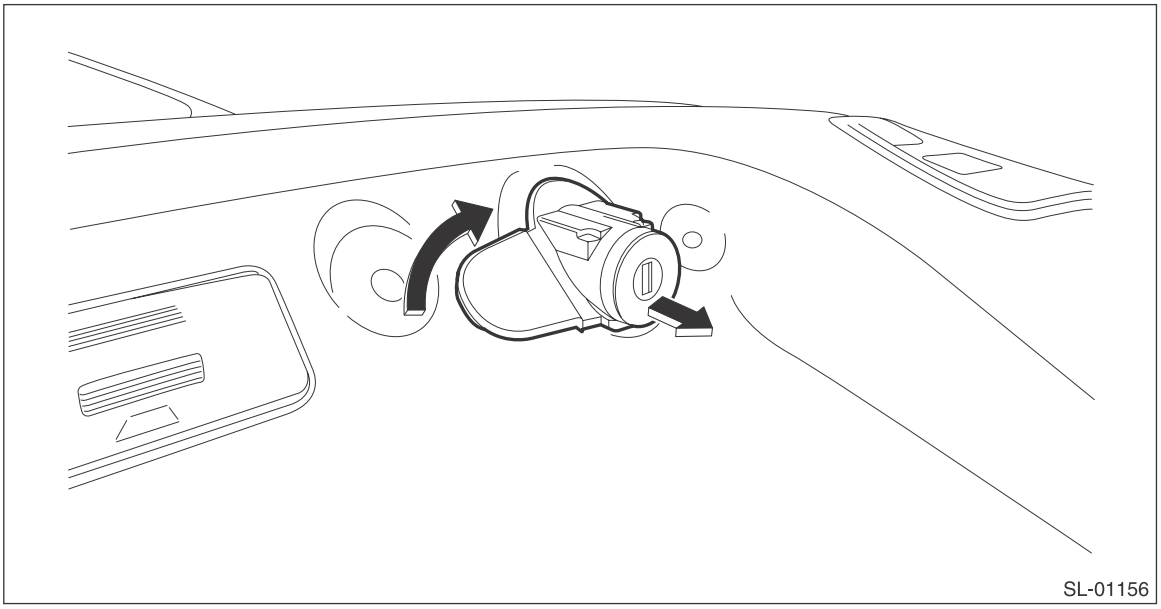

Tightening torque:
Key cylinder: 7.5 N·m (0.76 kgf-m, 5.5 ft-lb)

3. GLOVE BOX LID

1) Remove the glove box lid assembly.
   (1) Remove the glove box damper.
   (2) Release the stoppers and remove the glove box lid assembly by pulling it toward you.

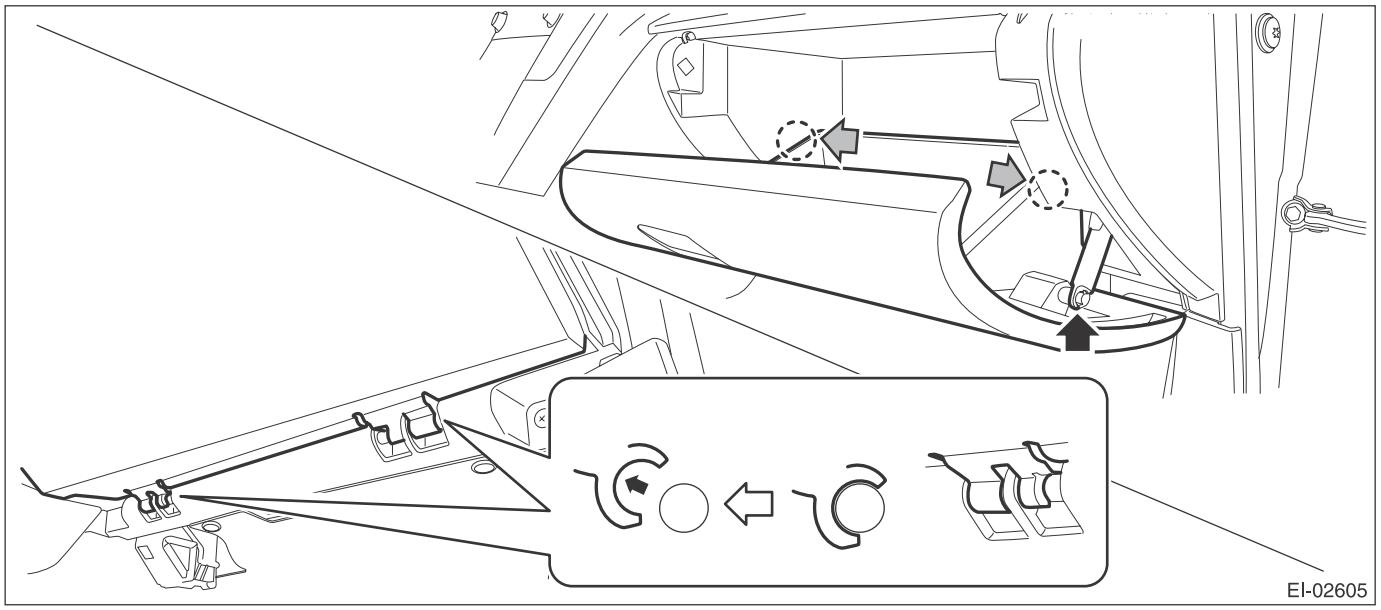

2) Remove the key cylinder.
   (1) UNLOCK the key cylinder, and pull up the lock knob.
   (2) While maintaining the condition (1), insert the key to set LOCK condition.

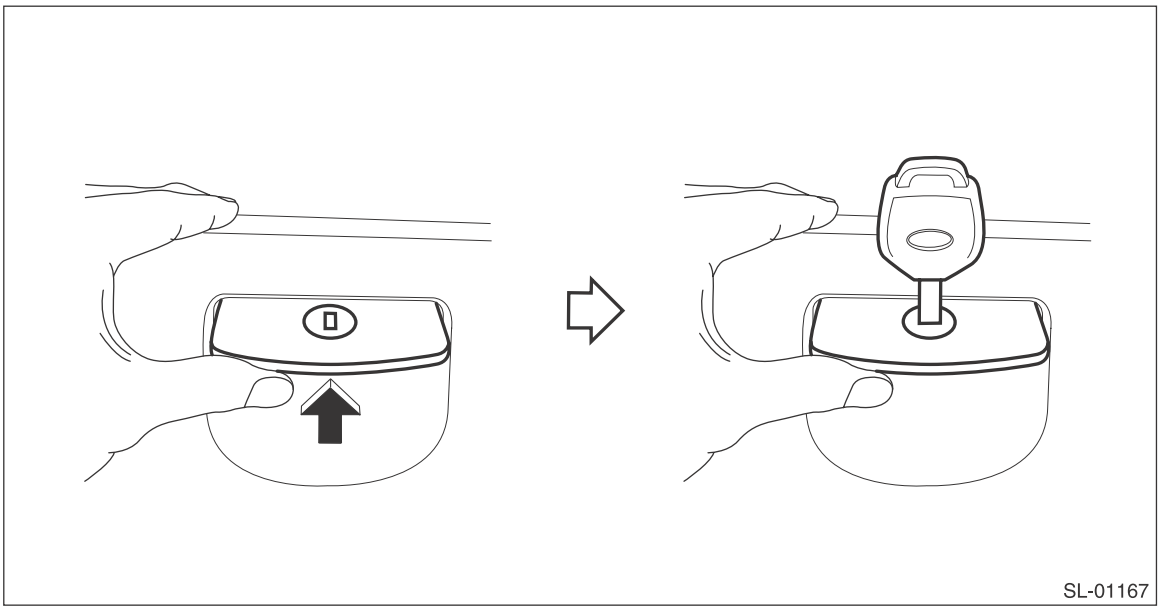

   (3) Push out the key cylinder, while pressing in the metal plate.

(4) Remove the key cylinder from lock knob, and replace the key cylinder.

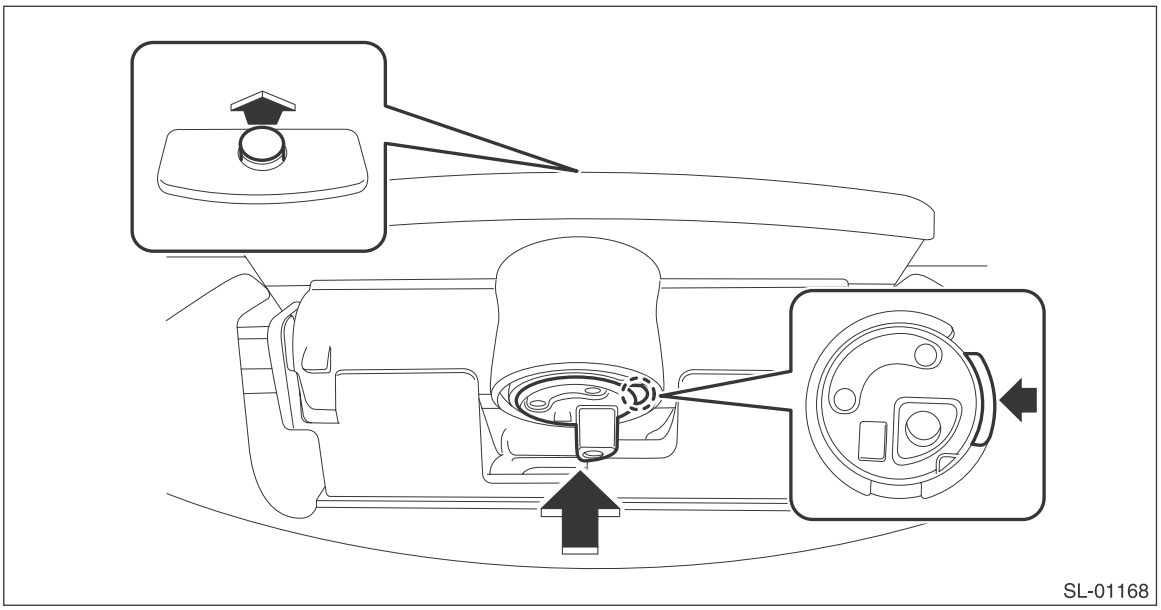

20.Security Control Module

A: REMOVAL

1) Remove the heater and cooling unit. <Ref. to AC-54, REMOVAL, Heater and Cooling Unit.>
2) Remove the security control module.
   (1) Disconnect the connector.
   (2) Remove the nuts, and remove the security control module.

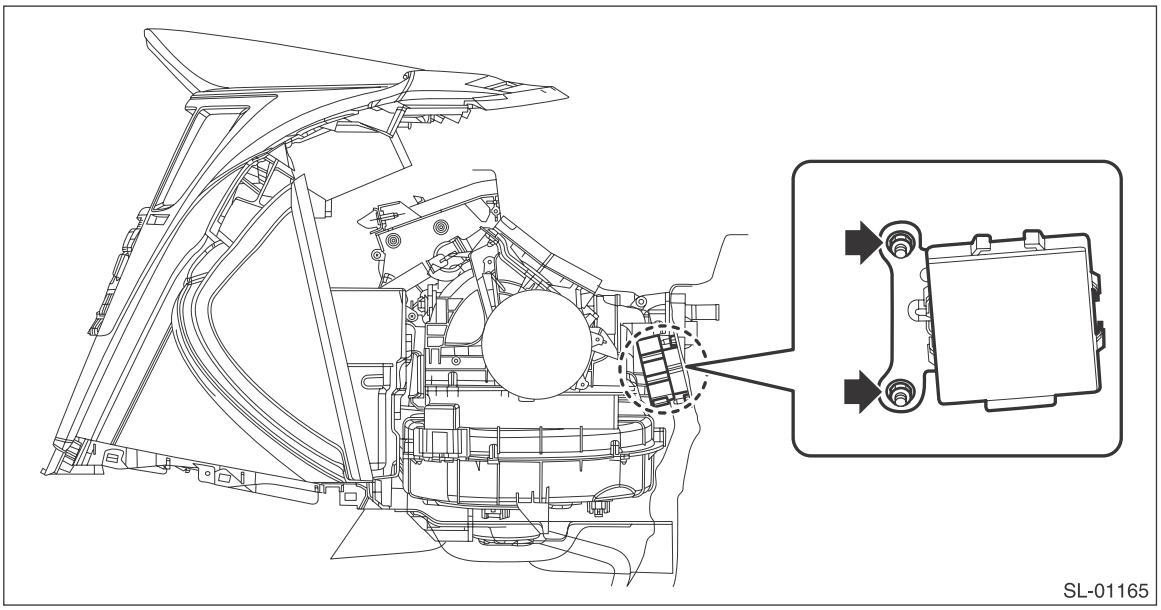

B: INSTALLATION

Install each part in the reverse order of removal.

Tightening torque:
Security control module: 7.5 N·m (0.76 kgf-m, 5.5 ft-lb)

21.Impact Sensor

A: REMOVAL

1) Remove the key from ignition switch.
2) Close all the doors and rear gate.
3) Press the UNLOCK button of the keyless transmitter.
4) Disconnect the ground cable from battery.
5) Remove the impact sensor.
6) Change the impact sensor setting using the Subaru Select Monitor.

B: INSTALLATION

1) Remove the key from ignition switch.
2) Close all the doors and rear gate.
3) Press the UNLOCK button of the keyless transmitter.
4) Disconnect the ground cable from battery.
5) Install the impact sensor.
6) Change the impact sensor setting using the Subaru Select Monitor.

C: OPERATION

1. IMPACT SENSOR SETTING USING SUBARU SELECT MONITOR

1) Prepare the Subaru Select Monitor kit.
2) Turn the ignition switch to ON (engine OFF) and run the “PC application for Subaru Select Monitor”.
3) On «System Selection Menu» display, select {Integ. unit mode}.
4) Select {ECM customizing}.
5) Perform impact sensor ON/OFF setting.
- Installed: ON
- Removed: OFF

6) Perform impact sensor ON/OFF setting.
- Installed: ON
- Removed: OFF

7) Turn the ignition switch to OFF and remove the Subaru Select Monitor.

D: ADJUSTMENT

1. CHECK IMPACT SENSOR

1) Remove the key from ignition switch.
2) Close all windows.
3) Close all the doors and rear gate. Leave the front hood open.
4) Press the LOCK button of the keyless transmitter from outside the vehicle.
5) After 30 seconds, check if the security indicator light blinks twice in 0.5 second at 2 seconds intervals.
6) For all glasses, hit the glass strongly and consecutively to see if the security alarm operates. In addition, lift the front hood by approximately 12 cm (4.7 in) or more and let it drop by its weight to see if the security alarm operates.
7) If it does not operate, adjust the impact sensitivity.

2. IMPACT SENSITIVITY ADJUSTMENT

1) Prepare the Subaru Select Monitor kit.
2) Turn the ignition switch to ON (engine OFF) and run the “PC application for Subaru Select Monitor”.
3) On «System Selection Menu» display, select {Impact Sensor}.
4) Execute the {Sensitivity Adjustment Mode}.
- The sensitivity can be adjusted in 11 levels from 0 to 10.
- The initial value is 5.
- A smaller number indicates a higher sensitivity.
- A larger number indicates a lower sensitivity.

5) Turn the ignition switch to OFF and remove the Subaru Select Monitor.

NOTE:
- Make sure that the sensitivity is set to an appropriate level so that any minor vibration typically experienced on a daily basis, such as a person leaning over a door or a ball hitting vehicle lightly, will not activate the alarm.
- The alarm should respond to significant vibrations that suggest a violence by a theft such as window glasses or doors being hit strongly and consecutively.
- The alarm may respond to substantial vibrations even though they do not mean any theft behavior, for example, road construction, multi-story parking space, train passing, vehicle getting on a ferry. Therefore, when adjusting the sensitivity, consult the customer to confirm the parking environment or other external conditions.
- If the sensitivity adjustment fails, the buzzer sounds four times. At that time, check the following points.
  - Error in CAN communication
  - Harness for open between body integrated unit and impact sensor
  - Body integrated unit, or impact sensor failure

22.Keyless Entry Control Module

A: REMOVAL

1. SEDAN MODEL

1) Disconnect the ground cable from battery.
2) Remove the rear shelf trim. <Ref. to EI-120, REMOVAL, Rear Shelf Trim.>
3) Remove the keyless entry control module.
   (1) Disconnect the connector.
   (2) Remove the bolt and remove the keyless entry control module.

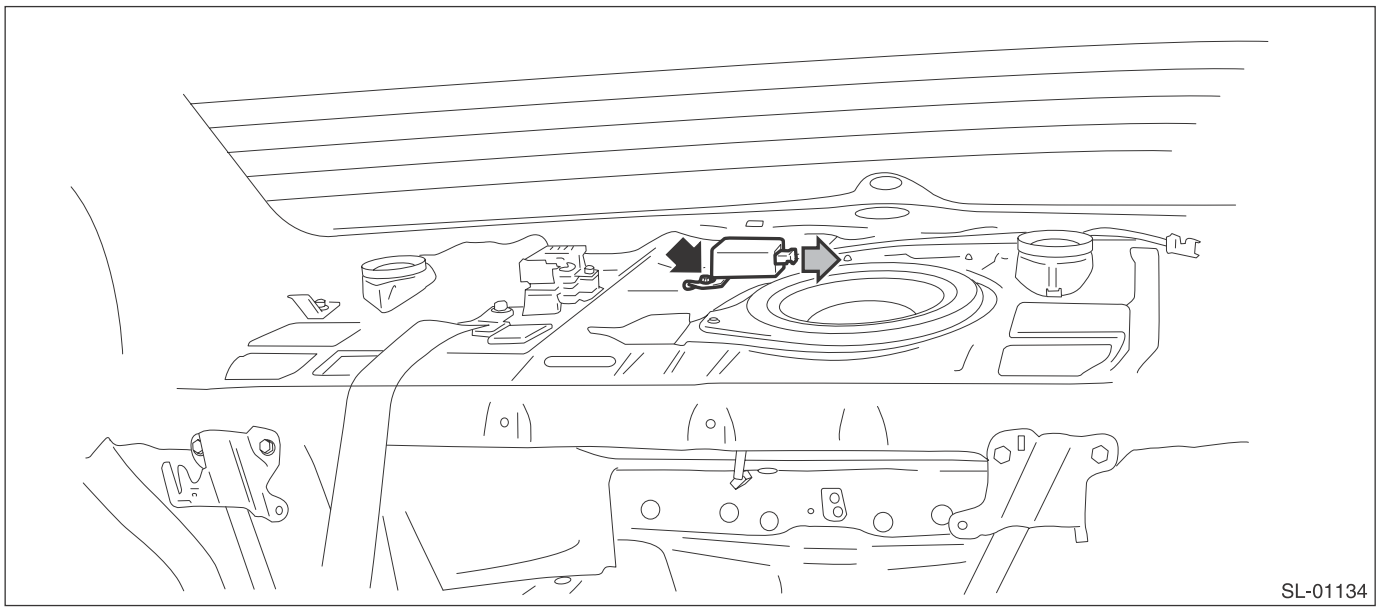

2. OUTBACK MODEL

1) Disconnect the ground cable from battery.
2) Remove the rear quarter trim LH. <Ref. to EI-109, REMOVAL, Rear Quarter Trim.>
3) Remove the keyless entry control module.
   (1) Disconnect the connector.
   (2) Remove the bolt and remove the keyless entry control module.

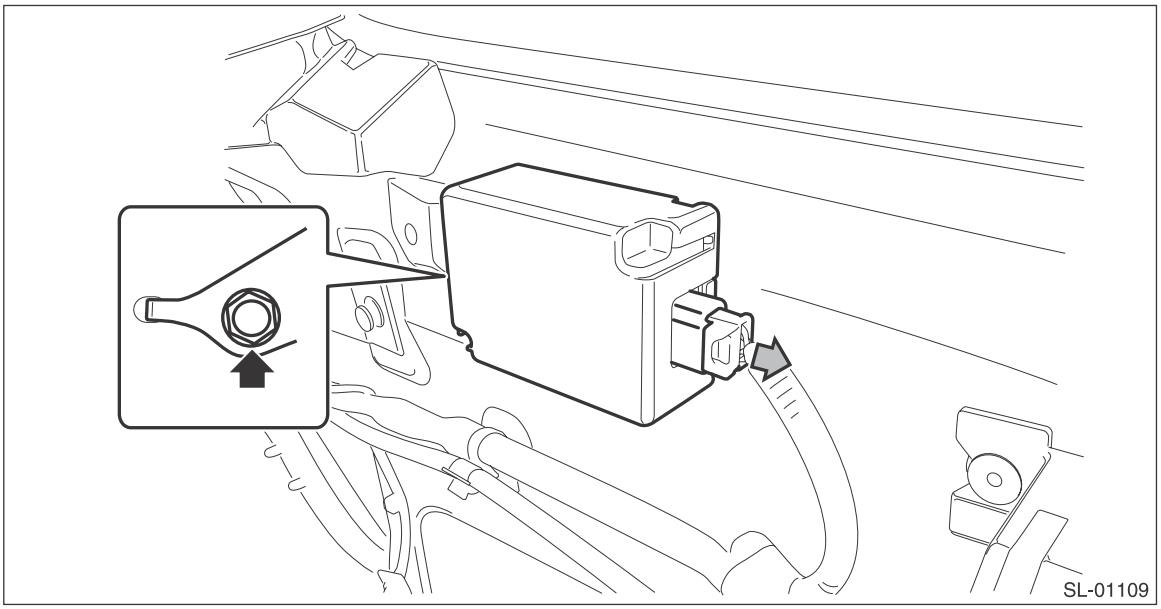

B: INSTALLATION

Install each part in the reverse order of removal.

Tightening torque:
Keyless entry control module: 13 N·m (1.33 kgf-m, 9.6 ft-lb)

23.Keyless Buzzer

A: REMOVAL

1) Disconnect the ground cable from battery.
2) Remove the front bumper face. <Ref. to EI-39, REMOVAL, Front Bumper.>
3) Remove the keyless buzzer.
   (1) Disconnect the connector.
   (2) Remove the clip, and remove the keyless buzzer.

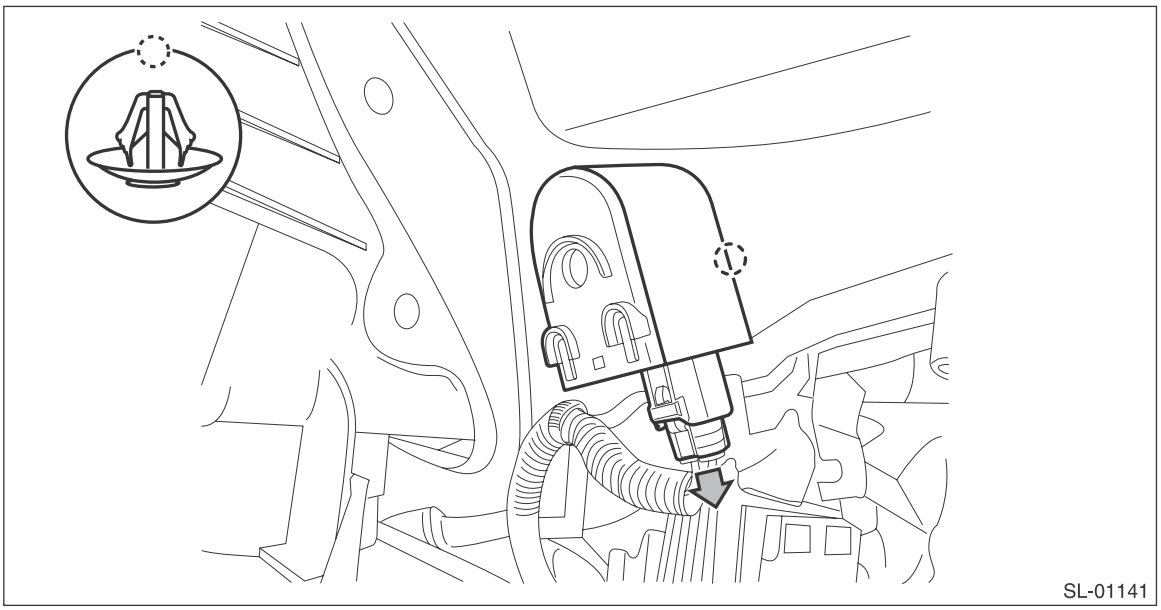

B: INSTALLATION

Install each part in the reverse order of removal.

C: INSPECTION

Using the Subaru Select Monitor, perform forced operation of the keyless buzzer. <Ref. to BC(diag)-17, OPERATION, User Customizing.>

NOTE:
If it does not sound, replace the keyless buzzer.

24.Body Integrated Unit

A: REMOVAL

NOTE:
1. When replacing the body integrated unit
   • Prepare the security ID plate.
   • When replacing the body integrated unit, check the current settings and record it. <Ref. to BC(diag)-13, LIST, Read Current Data.>
2. After replacing the body integrated unit
   • Register the immobilizer. For detailed operation procedures, refer to “PC application help for Subaru Select Monitor”. (models with immobilizer)
   • Set the current settings as recorded.

1) Disconnect the ground cable from battery.
2) Remove the instrument panel lower cover. <Ref. to EI-63, REMOVAL, Instrument Panel Lower Cover.>
3) Remove the body integrated unit.

CAUTION:
Be careful to keep water and other foreign materials away from body integrated unit.
   (1) Disconnect the harness clip and connector.
   (2) Remove the bolts, and remove the body integrated unit.

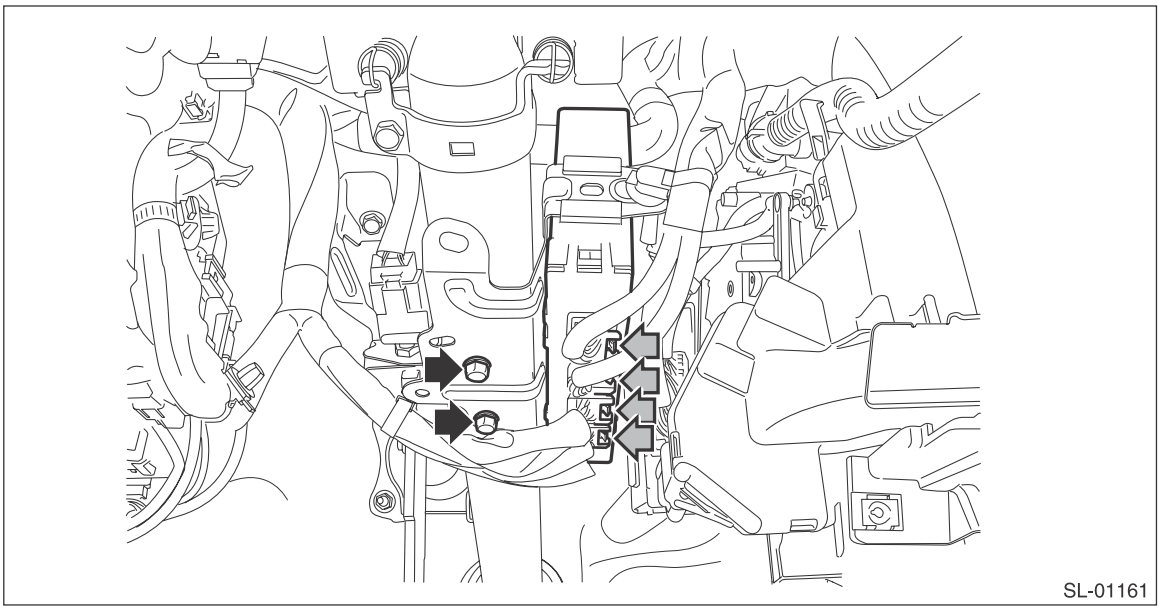

B: INSTALLATION

Install each part in the reverse order of removal.

Tightening torque:
Body integrated unit: 7.5 N·m (0.76 kgf-m, 5.5 ft-lb)

NOTE:
Make sure that there are no differences from the contents of the current settings after installation. <Ref. to BC(diag)-13, LIST, Read Current Data.>

25.Keyless Transmitter

A: REMOVAL

NOTE:
For C6 model, refer to Transmitter. <Ref. to SL-76, REMOVAL, Transmitter.>

1. KEYLESS TRANSMITTER BATTERY

CAUTION:
To prevent static electricity damage to the keyless transmitter printed circuit board, touch the steel area of building with hand to discharge static electricity carried on body or clothes before disassembling the keyless transmitter.

1) Disassemble the keyless transmitter, and take out the transmitter case (1).

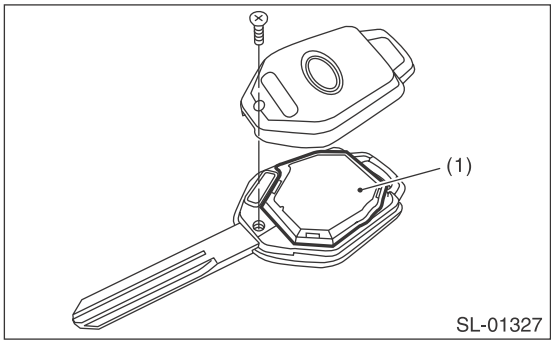

2) Release the claws, and open the transmitter case.

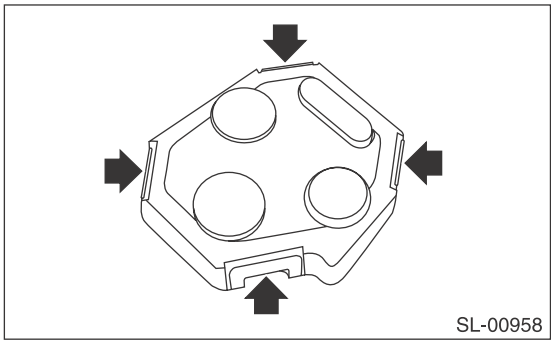

3) Remove the battery (1) from the transmitter.

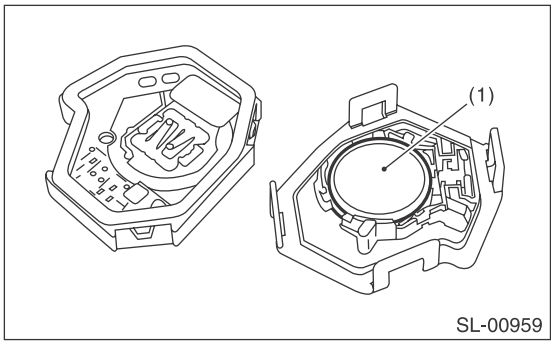

B: INSTALLATION

1. KEYLESS TRANSMITTER BATTERY

Install each part in the reverse order of removal.

C: INSPECTION

1. KEYLESS TRANSMITTER BATTERY

1) Check the keyless transmitter battery voltage.

Preparation tool: Circuit tester

NOTE:
Complete the measurement within 5 seconds because the battery discharges during measurement.

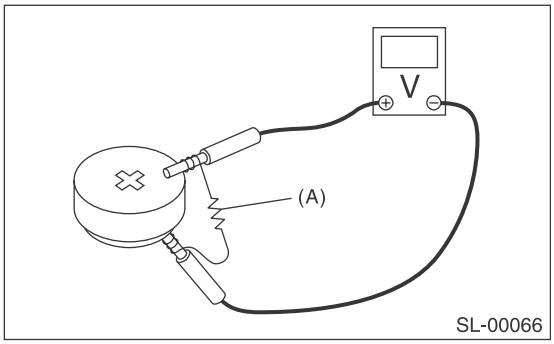

Battery terminal	Inspection Conditions	Specification
(+) — (–)	Connect resistor (A) 47 Ω	2.5 — 3.0 V

2) Replace the battery if the inspection result is not within the standard value. (Use CR1620 or equivalent.)

D: REPLACEMENT

1. REGISTRATION OF KEYLESS TRANSMITTER WITH SUBARU SELECT MONITOR

NOTE:
- A maximum of four keyless transmitter can be registered for each individual vehicle.
- When replacing or adding the keyless transmitter, new registration of transmitter is necessary.

1) Prepare the Subaru Select Monitor kit. <Ref. to SL-7, SPECIAL TOOL, PREPARATION TOOL, General Description.>

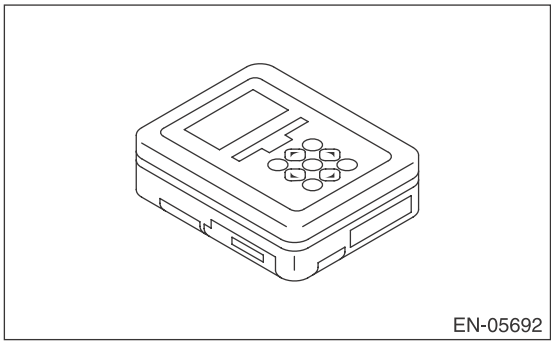

2) Prepare PC with Subaru Select Monitor installed.
3) Connect the USB cable to SDI (Subaru Diagnosis Interface) and USB port on the personal computer (dedicated port for the Subaru Select Monitor).

NOTE:
The dedicated port for the Subaru Select Monitor means the USB port which was used to install the Subaru Select Monitor.

4) Connect the diagnosis cable to SDI.

5) Connect SDI to data link connector located in the lower portion of the instrument panel (on the driver's side).

CAUTION:
Do not connect the scan tools other than the Subaru Select Monitor.

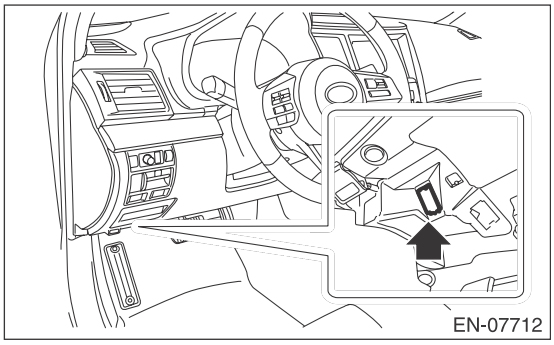

6) Start the PC.
7) Turn the ignition switch to ON (engine OFF) and run the "PC application for Subaru Select Monitor".
8) On the «Main Menu» of the Subaru Select Monitor, select the {Each System Check} → {Integ. unit mode} → {Keyless ID registration}.
9) Input the 8-digit ID number attached to the tag plate of the transmitter or inside the transmitter, from left to right. Press the [OK] key.
10) The ID number you have entered will be shown. Make sure that the ID number shown is the same as that of plastic bag or inside of transmitter.
11) Press the [OK] key if the ID number is correct. Press the [Exit] key if incorrect, to return to the step 3) and enter the ID number again.
12) «ID is being registered···» is displayed and registration starts.
13) «ID registration completed » will be displayed when the registration process is done.
14) To exit, select «Quit: NO» to return to {Keyless ID registration}. If there are additional keyless transmitters to be registered, select «The following are registered: OK» to return to the step 4).

NOTE:
• If the registration fails, «ID cannot register. Please try again.» will be shown. Select the [OK] key to return to the {Keyless ID registration}. Retry starting from the step 3).
• «Quit: NO» is shown on the Subaru Select Monitor when fourth keyless transmitter has been registered. Select the [NO] key to return to {Keyless ID registration}.

26.Transmitter

A: REMOVAL

NOTE:
For models except for C6, refer to Keyless Transmitter. <Ref. to SL-73, REMOVAL, Keyless Transmitter.>

1. TRANSMITTER BATTERY

NOTE:
To prevent static electricity damage to the transmitter printed circuit board, touch the steel area of building with hand to discharge static electricity carried on body or clothes before disassembling the transmitter.
Remove the battery (1) from the transmitter.

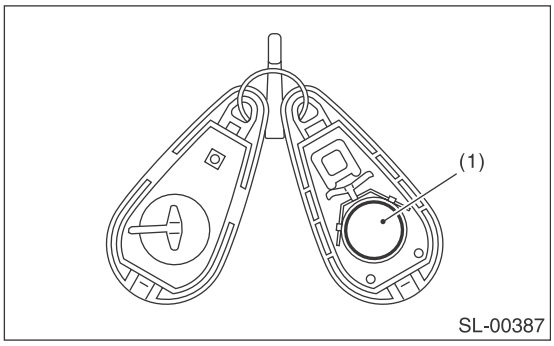

B: INSTALLATION

1. TRANSMITTER BATTERY

Install each part in the reverse order of removal.

C: INSPECTION

1. TRANSMITTER BATTERY

1) Check the transmitter battery voltage.

Preparation tool: Circuit tester

NOTE:
Complete the measurement within 5 seconds because the battery discharges during measurement.

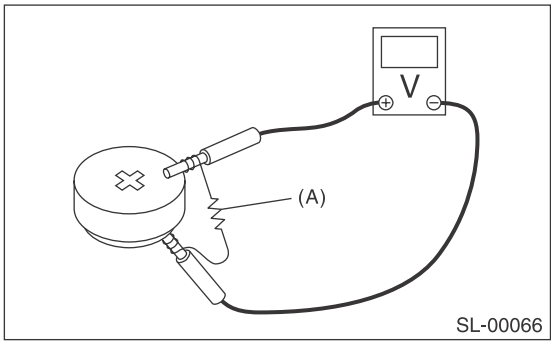

Battery terminal	Inspection conditions	Specification
(+) — (–)	Connect resistor (A) 47 Ω	2.5 — 3.0 V

2) Replace the battery if the inspection result is not within the standard value. (Use CR1620 or equivalent.)

D: REPLACEMENT

1. REGISTRATION OF KEYLESS TRANSMITTER WITH SUBARU SELECT MONITOR

NOTE:
- A maximum of four keyless transmitter can be registered for each individual vehicle.
- When replacing or adding the keyless transmitter, new registration of transmitter is necessary.

1) Prepare the Subaru Select Monitor kit. <Ref. to SL-7, SPECIAL TOOL, PREPARATION TOOL, General Description.>

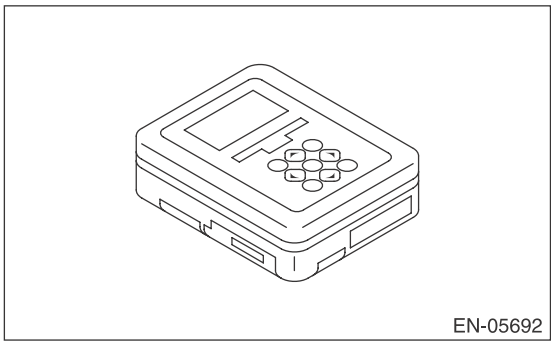

2) Prepare PC with Subaru Select Monitor installed.
3) Connect the USB cable to SDI (Subaru Diagnosis Interface) and USB port on the personal computer (dedicated port for the Subaru Select Monitor).

NOTE:
The dedicated port for the Subaru Select Monitor means the USB port which was used to install the Subaru Select Monitor.

4) Connect the diagnosis cable to SDI.
5) Connect SDI to data link connector located in the lower portion of the instrument panel (on the driver's side).

CAUTION:
Do not connect the scan tools other than the Subaru Select Monitor.

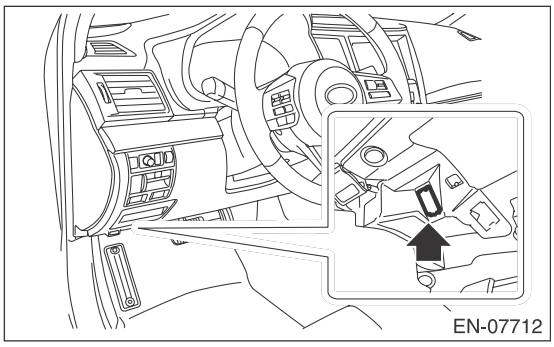

6) Start the PC.
7) Turn the ignition switch to ON (engine OFF) and run the "PC application for Subaru Select Monitor".
8) On the «Main Menu» of the Subaru Select Monitor, select the {Each System Check} → {Integ. unit mode} → {Keyless ID registration}.
9) Input the 8-digit ID number attached to the tag plate of the transmitter or inside the transmitter, from left to right. Press the [OK] key.
10) The ID number you have entered will be shown. Make sure that the ID number shown is the same as that of plastic bag or inside of transmitter.
11) Press the [OK] key if the ID number is correct. Press the [Exit] key if incorrect, to return to the step 3) and enter the ID number again.
12) «ID is being registered···» is displayed and registration starts.
13) «ID registration completed » will be displayed when the registration process is done.

14) To exit, select «Quit: NO» to return to {Keyless ID registration}. If there are additional keyless transmitters to be registered, select «The following are registered: OK» to return to the step 4).

NOTE:
• If the registration fails, «ID cannot register. Please try again.» will be shown. Select the [OK] key to return to the {Keyless ID registration}. Retry starting from the step 3).
• «Quit: NO» is shown on the Subaru Select Monitor when fourth keyless transmitter has been registered. Select the [NO] key to return to {Keyless ID registration}.

27.Immobilizer Control Module

A: NOTE

The control of immobilizer system is carried out in body integrated unit. For the detailed procedure, refer to the section of body integrated unit.

- Removal:<Ref. to SL-72, REMOVAL, Body Integrated Unit.>
- Installation:<Ref. to SL-72, INSTALLATION, Body Integrated Unit.>

28.Immobilizer Antenna

A: REMOVAL

1) Disconnect the ground cable from battery.
2) Remove the steering column cover.
   (1) Remove the screws by turning the steering wheel to right and left.

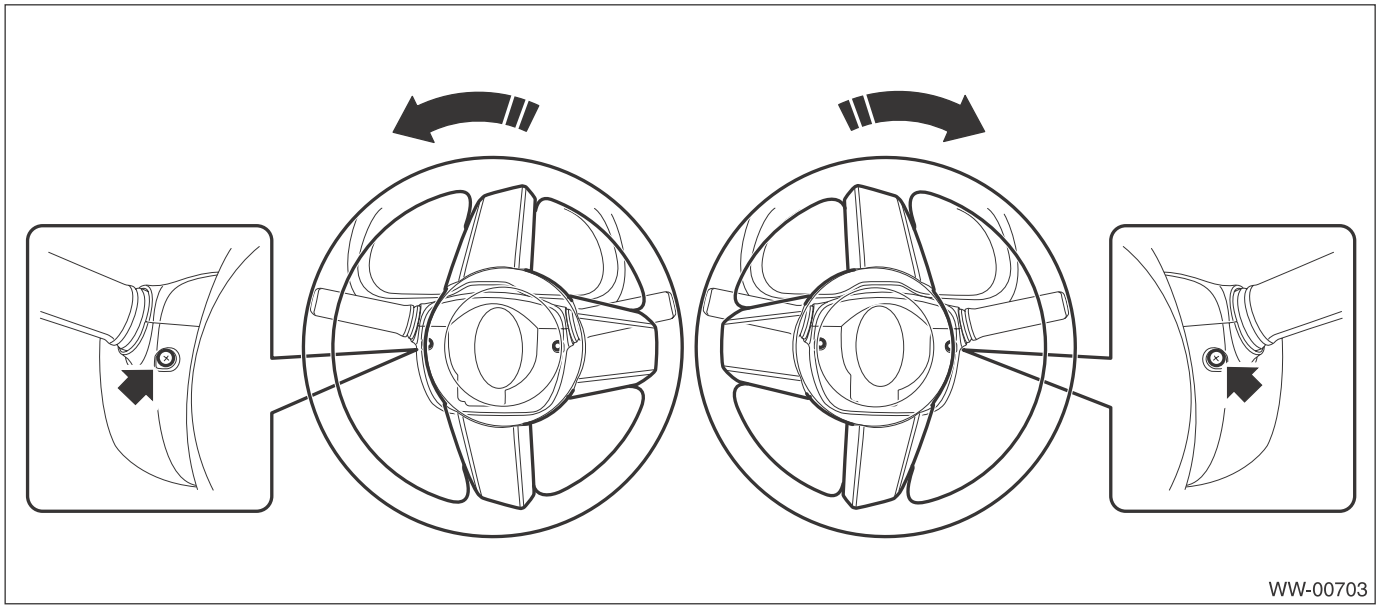

   (2) Release the claws and remove the steering column lower cover.

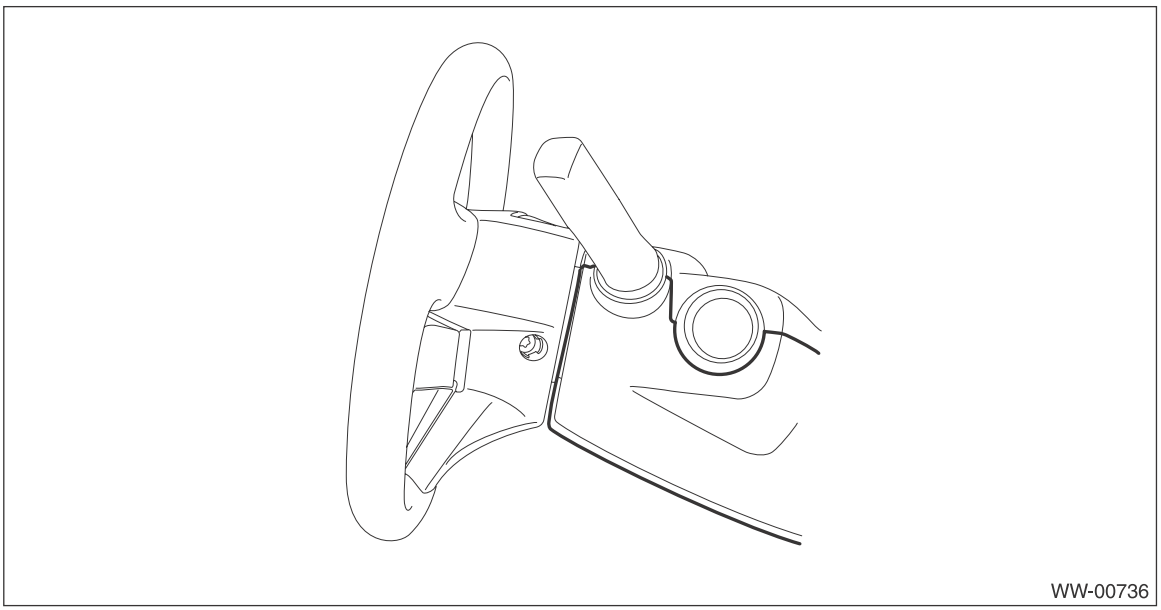

(3) Separate the steering column upper cover and steering upper cover, and remove the steering column upper cover.

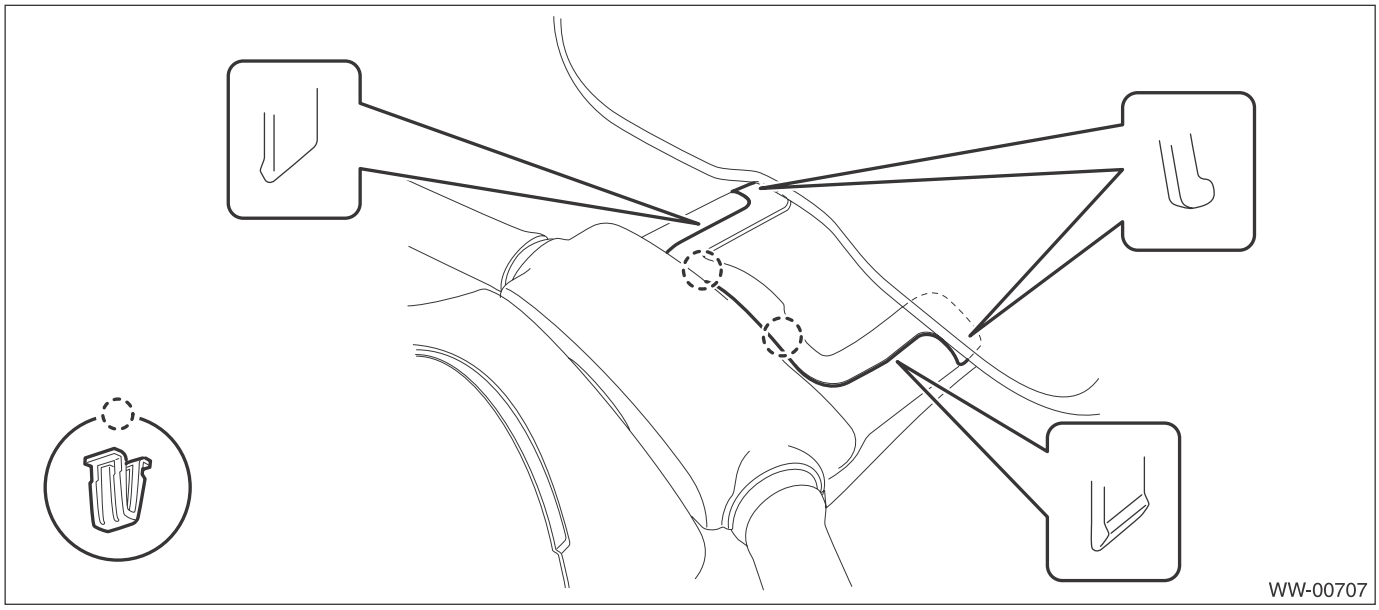

3) Remove the immobilizer antenna.

CAUTION:
Do not apply excessive force to remove the immobilizer antenna and lock. Otherwise they may be broken because those parts are the products made of a plastic.

(1) Disconnect the connector and remove the screw.
(2) Remove the ignition illumination light and release the claws, then detach the immobilizer antenna.

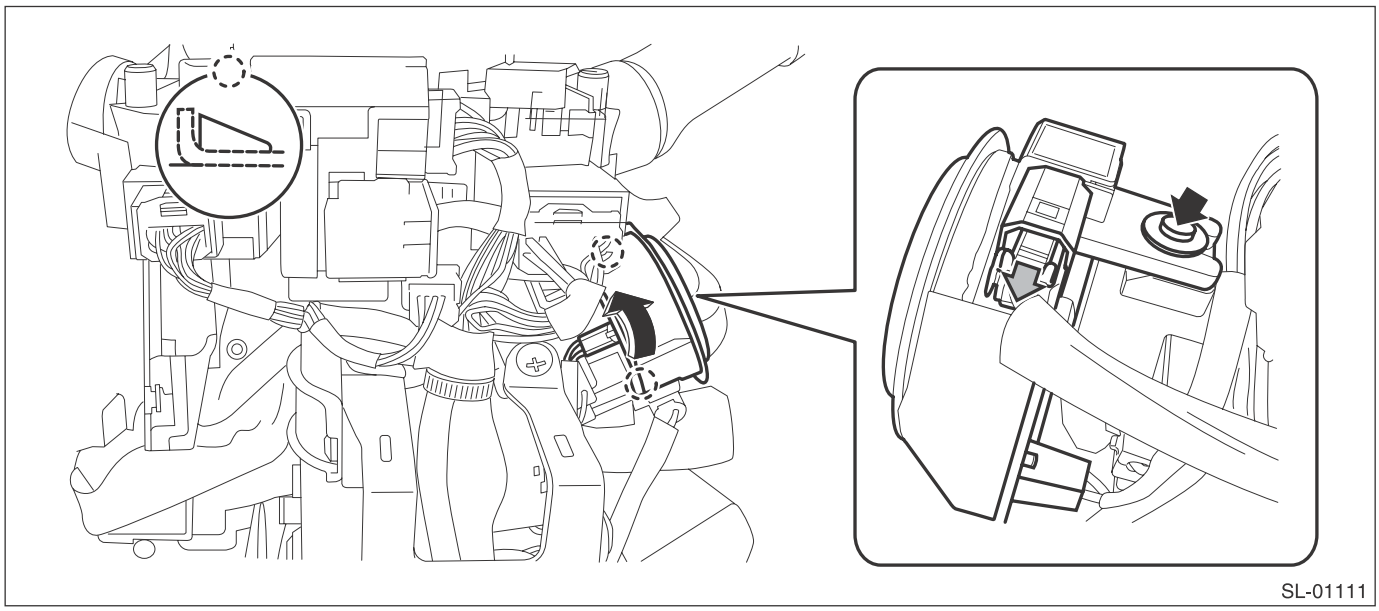

B: INSTALLATION

Install each part in the reverse order of removal.

SUNROOF/T-TOP/CONVERTIBLE TOP (SUNROOF)

SR

Page

1. General Description 2
2. Relay and Fuse 4
3. Sunroof Control System 5
4. Glass Lid 6
5. Sunroof Assembly 9
6. Sunroof Motor 14
7. Sunroof Switch 16
8. Sunshade 18

1. General Description

A: COMPONENT

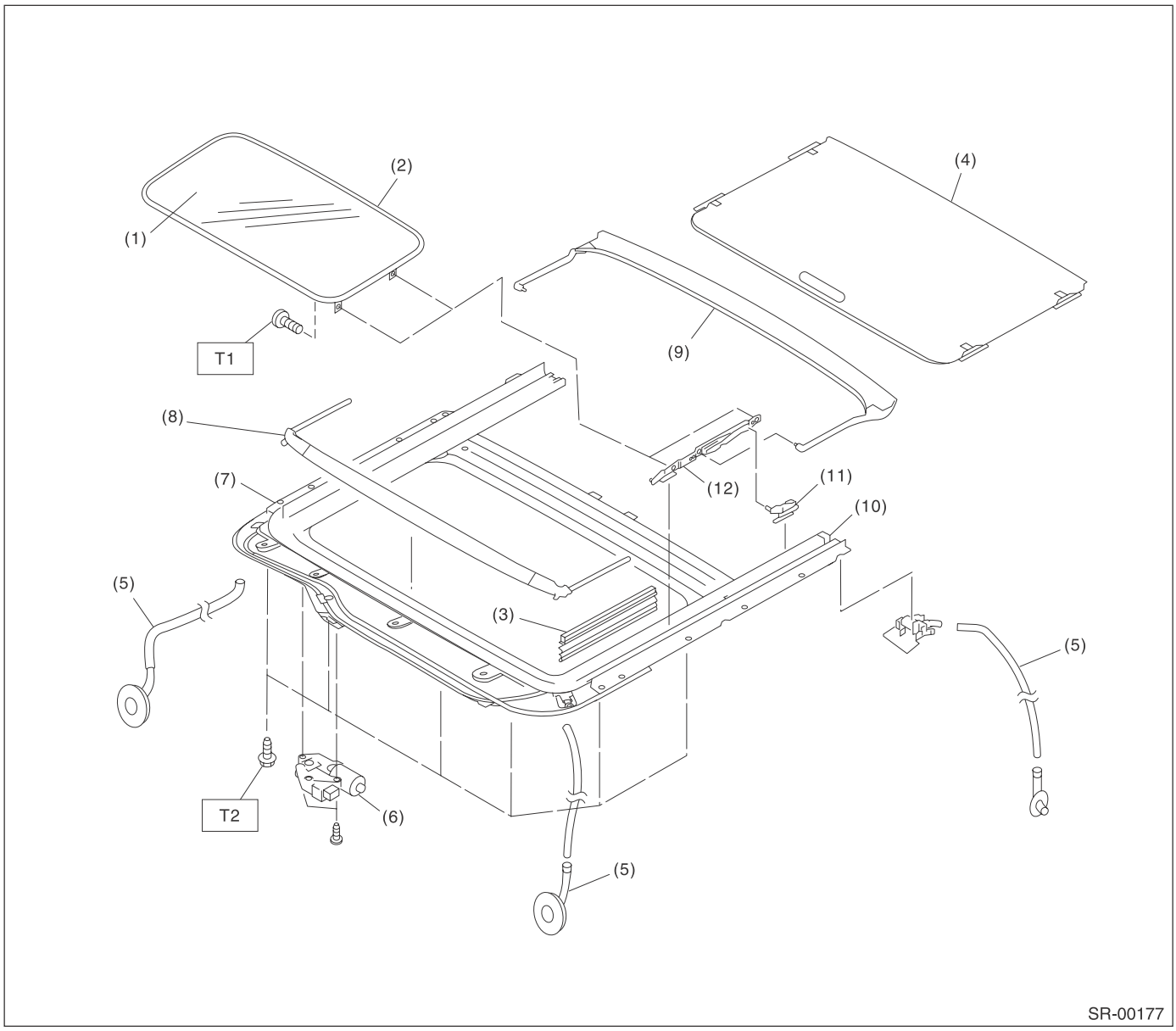

(1) Glass lid
(2) Weather strip
(3) Lid cover
(4) Sunshade
(5) Drain tube
(6) Motor ASSY
(7) Frame ASSY
(8) Deflector
(9) Drain plate
(10) Stopper rubber
(11) Link ASSY
(12) Lid bracket

Tightening torque:N·m (kgf-m, ft-lb)
T1: 4.5 (0.46, 3.3)
T2: 6.0 (0.61, 4.4)

B: CAUTION

• Before disassembling or reassembling parts, always disconnect the battery ground cable from battery. When replacing the radio, control module, and other parts provided with memory functions, record the memory contents before disconnecting the battery ground cable. Otherwise, the memory is cleared.
• Reassemble the parts in the reverse order of disassembly unless otherwise indicated.
• Adjust parts to the given specifications.
• Connect the connectors securely when reassembling.
• After reassembly, make sure that the functional parts operate normally.

C: PREPARATION TOOL

1. GENERAL TOOL

TOOL NAME	REMARKS
Circuit tester	Used for measuring resistance and voltage.
Hexagon wrench	Used for forcedly driving the sunroof motor.

2. Relay and Fuse

A: LOCATION

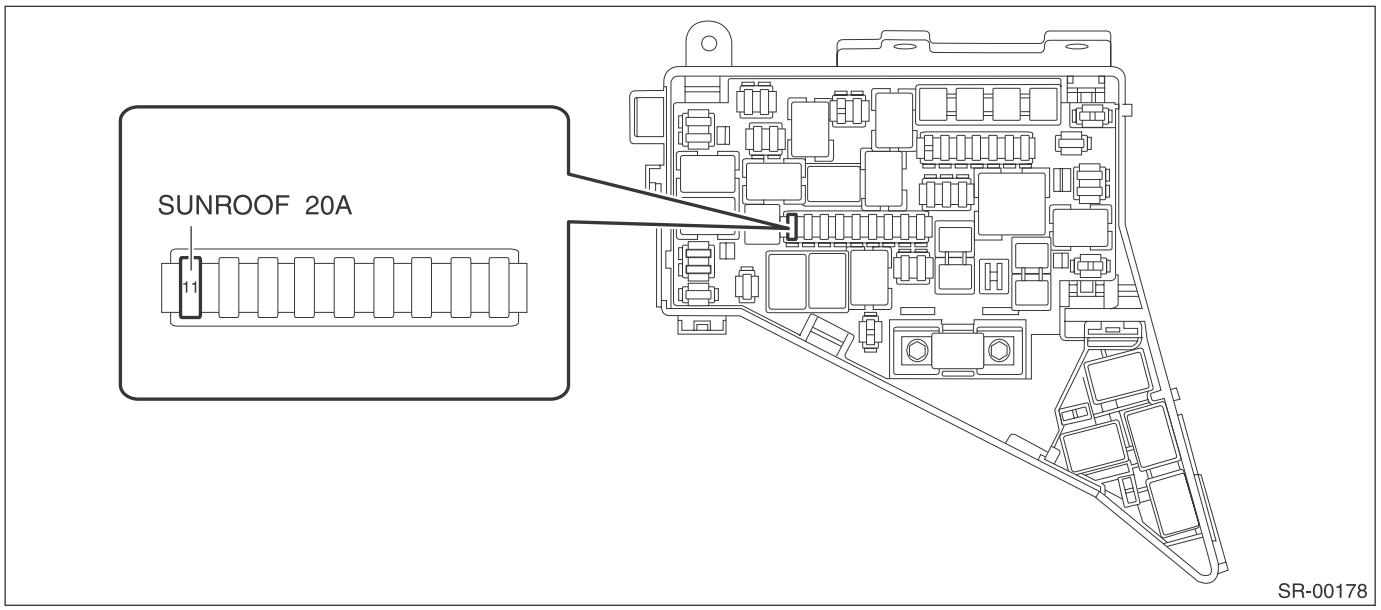

B: INSPECTION

1. CHECK FUSE.

1) Remove the fuse and check visually.
2) If the fuse is blown out, replace the fuse.

3. Sunroof Control System

A: WIRING DIAGRAM

Refer to “Sunroof Control System” in the wiring diagram. <Ref. to WI-219, WIRING DIAGRAM, Sunroof Control System.>

B: INSPECTION

Symptoms	Inspection steps
Water leakage	1. Check roof panel and glass lid for improper or poor sealing. 2. Check drain tube for clogging. 3. Check sunroof frame seal and body for improper fit.
Booming noise, wind noise and other noise	1. Check glass lid and roof panel for improper clearance. 2. Check sunshade and roof trim for improper clearance.
Abnormal motor noise	1. Check installing part of motor for looseness. 2. Check gears and bearings for wear. 3. Check cable for wear. 4. Check cable pipe for deformities.
Failure of sunroof (Motor operates properly.)	1. Check guide rail for foreign particles. 2. Check guide rail for improper installation. 3. Check parts for mutual interference. 4. Check cable slider for improper clinching. 5. Check cable for improper installation.
Motor does not rotate or rotate improperly.	1. Check fuse for blown out. 2. Check switch for improper function. 3. Check motor for incorrect terminal voltage. 4. Check the relay for improper operation. 5. Check harness for open or short and terminals for poor connections.
Failure turn of glass lid	Check guide rail for foreign particles.

- Failure turn of glass lid while driving rough road.

Glass lid has auto-reverse function. When specified or more force is applied to the glass lid, the lid turns back and stops. When operating the glass lid (open or close) while driving the rough road, the lid judges vibration as a force and may causes failure turns. When the failure turn is occurred, need to perform the initialize operation with following procedure.

C: OPERATION

1. INITIALIZE OPERATION

NOTE:
When initialize operation is performed, it is necessary to press the switch repeatedly as it operates for only at the moment when the switch is pressed, even when the switch is held down.
1) Press the slide switch to close the glass lid completely.
2) Press the slide switch again and tilt up the glass lid to lock.
3) Press the slide switch for more than 0.3 seconds.
4) Initialize operation is completed.

D: NOTE

For operation procedures of each component of the sunroof control system, refer to the respective section.
- Glass lid:<Ref. to SR-6, Glass Lid.>
- Sunroof assembly:<Ref. to SR-9, Sunroof Assembly.>
- Sunroof motor:<Ref. to SR-14, Sunroof Motor.>
- Sunroof switch:<Ref. to SR-16, Sunroof Switch.>
- Sunshade:<Ref. to SR-18, Sunshade.>

4. Glass Lid

A: REMOVAL

1) Completely close the glass lid, and then open the sunshade.
2) Disconnect the claws and then remove the lid cover.

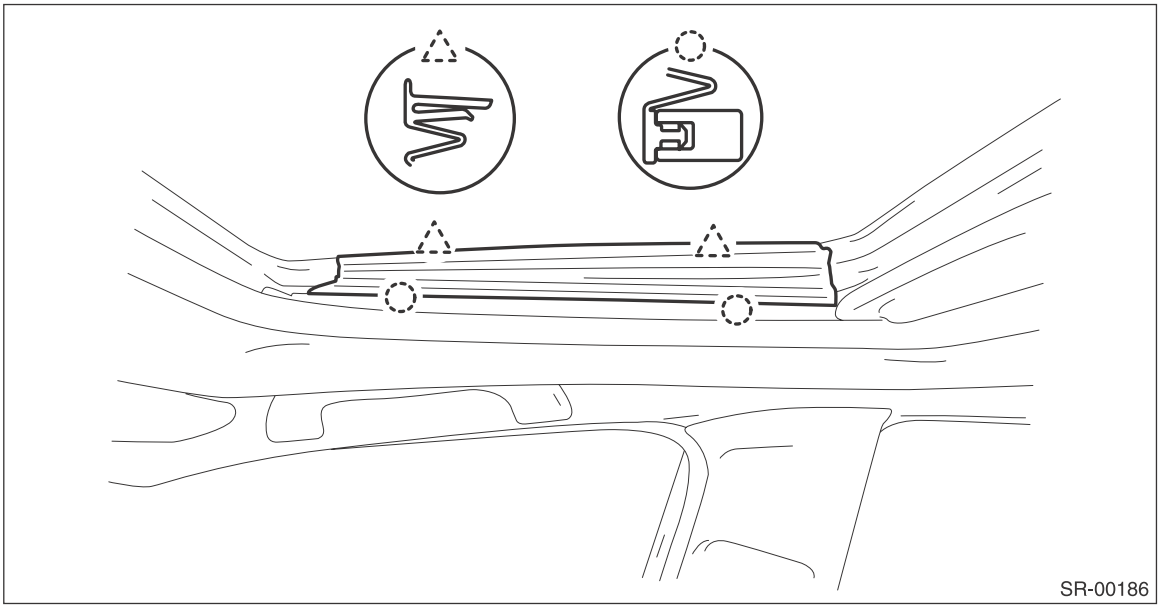

3) Remove the bolts, then remove the glass lid.

CAUTION:
Be careful not to damage the glass lid.

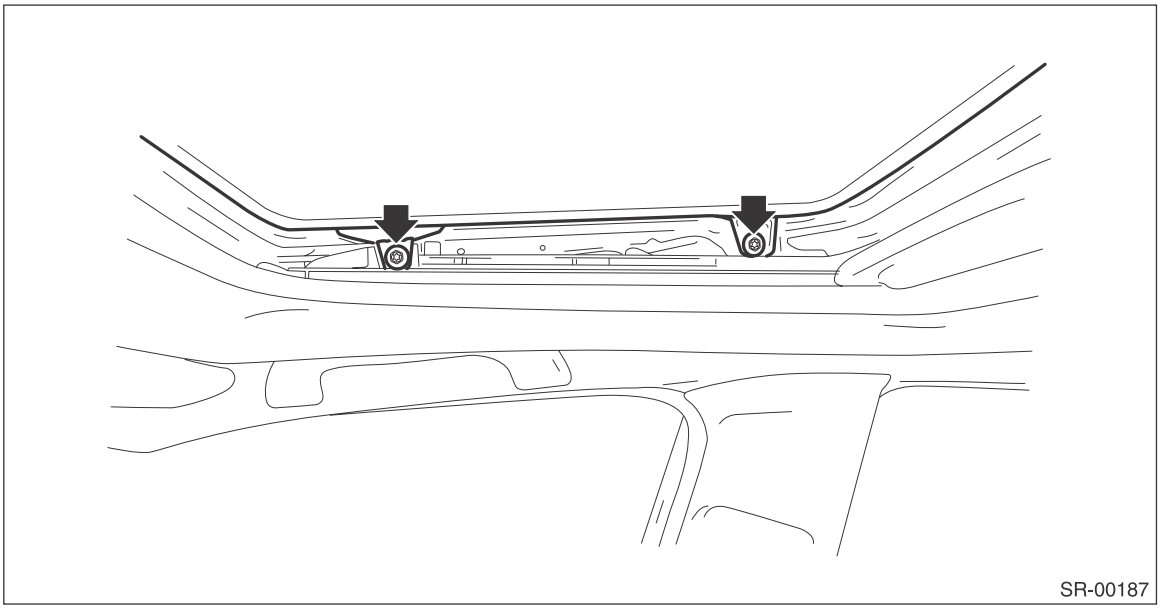

B: INSTALLATION

Install each part in the reverse order of removal.

C: ADJUSTMENT

Adjust the height of the glass lid and roof panel.

- Loosen the glass lid mounting bolts (A), and then adjust the height with moving the lid side.

Difference in height between weather strip and roof panel L:
0±1.0 mm (0±0.04 in)

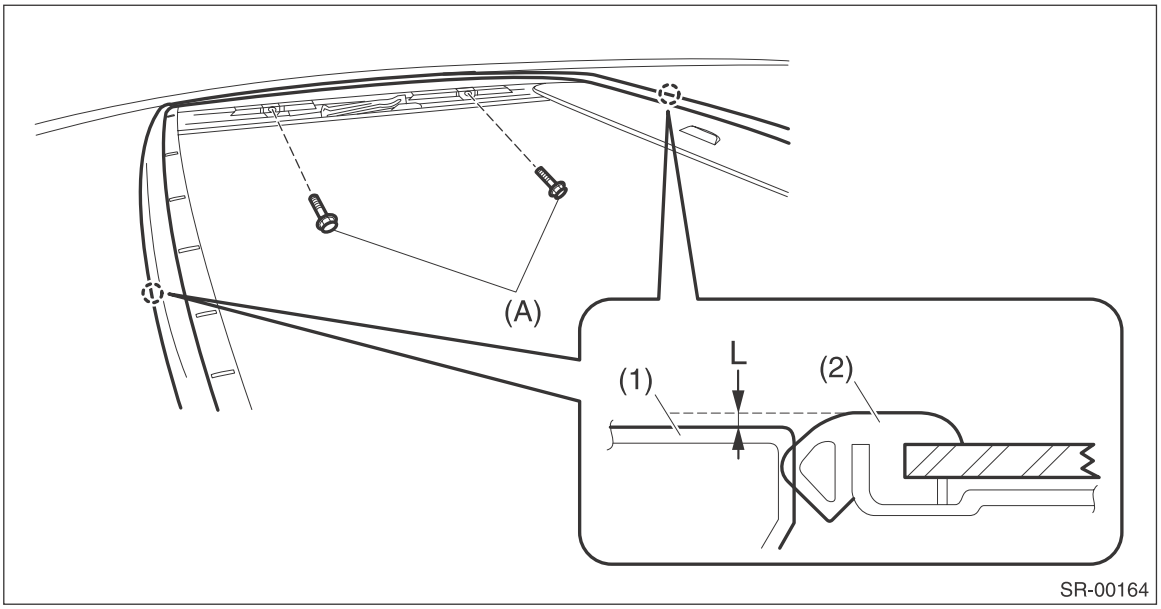

(1) Roof panel
(2) Weather strip

D: FORCED DRIVE

If the glass lid does not operate or the sunroof motor is not supplied with power, move the glass lid using the hexagon wrench.

Width across flat 5 mm (0.20 in)

CAUTION:
After a forced operation, make sure to perform an initialize operation. <Ref. to SR-5, INITIALIZE OPERATION, OPERATION, Sunroof Control System.>

1) Remove the spot map light. <Ref. to LI-62, REMOVAL, Spot Map Light.>
2) Insert the hexagon wrench securely until it touches the motor shaft edge.
3) Turn the hexagon wrench, and move the glass lid.

- Turning right, the glass lid open.
- Turning left, the glass lid close.

CAUTION:
Be careful not to damage the adjacent parts with the rod end when moving the glass lid with the hexagon wrench.

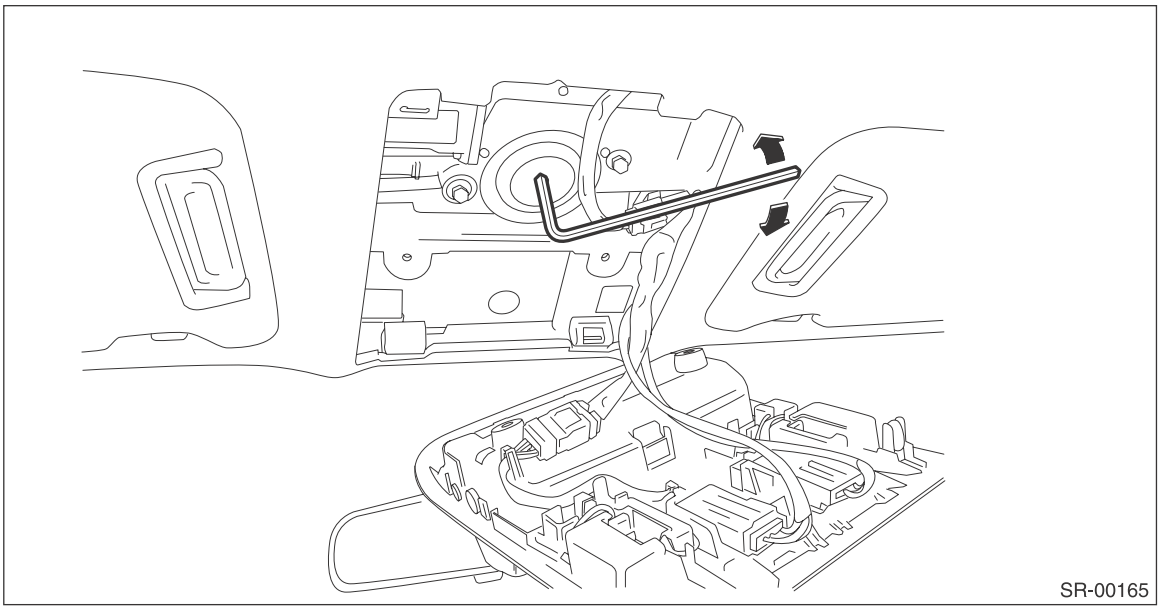

5. Sunroof Assembly

A: REMOVAL

CAUTION:
When removing the clip, use great care not to damage the roof trim.

1) Remove the glass lid.
   (1) Completely close the glass lid, and then open the sunshade.
   (2) Disconnect the claws and then remove the lid cover.

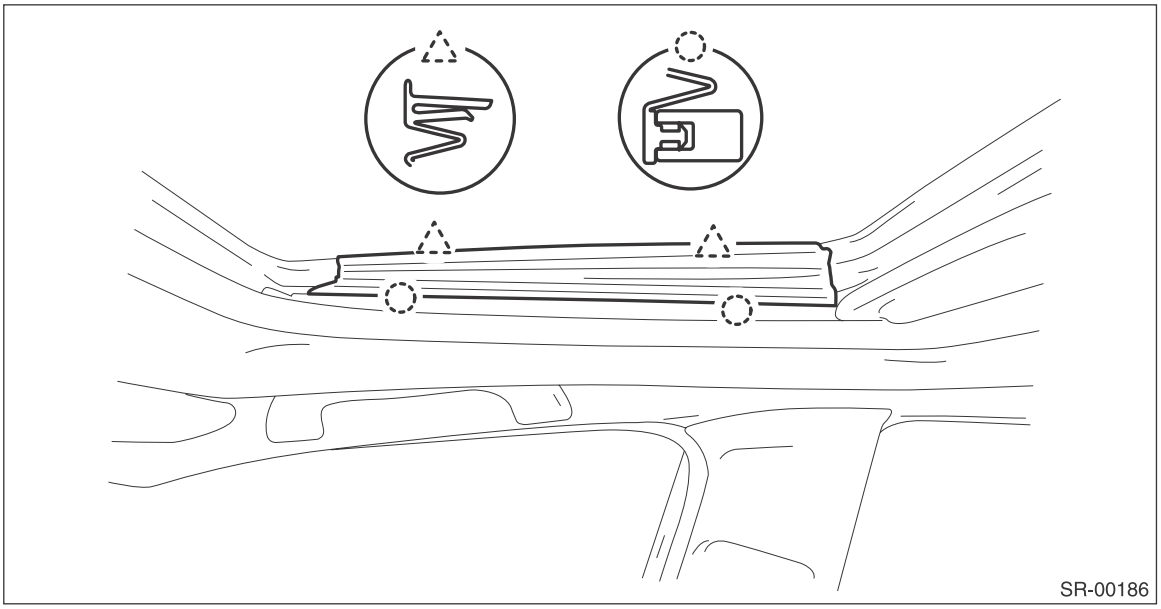

   (3) Remove the bolts, then remove the glass lid.

CAUTION:
Be careful not to damage the glass lid.

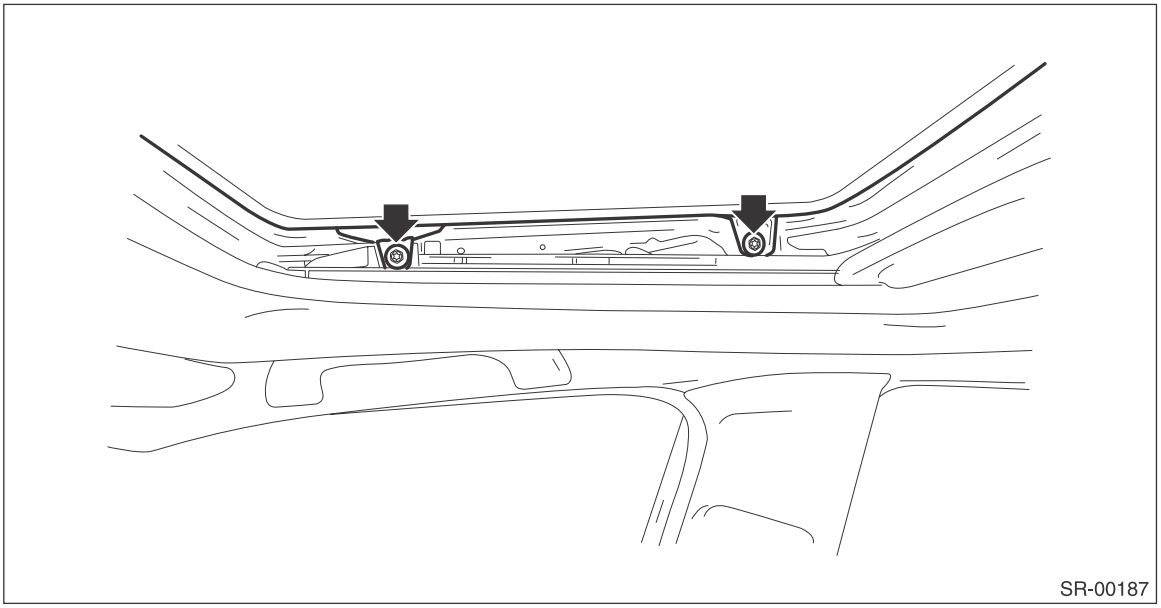

2) Remove the roof trim. <Ref. to EI-131, REMOVAL, Roof Trim.>
3) Disconnect the sunroof motor connector.
4) Remove the frame assembly.

(1) Remove the drain tube.

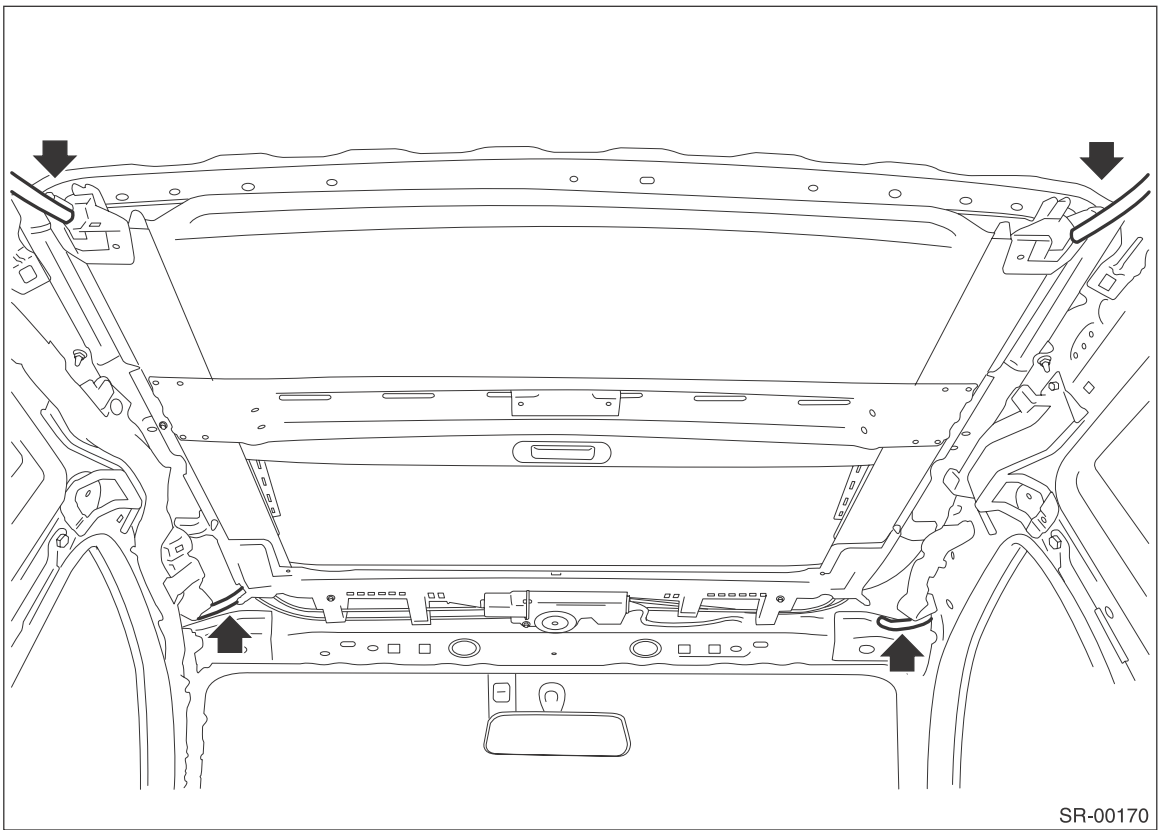

(2) Remove the bolts and then remove the sunroof bracket.

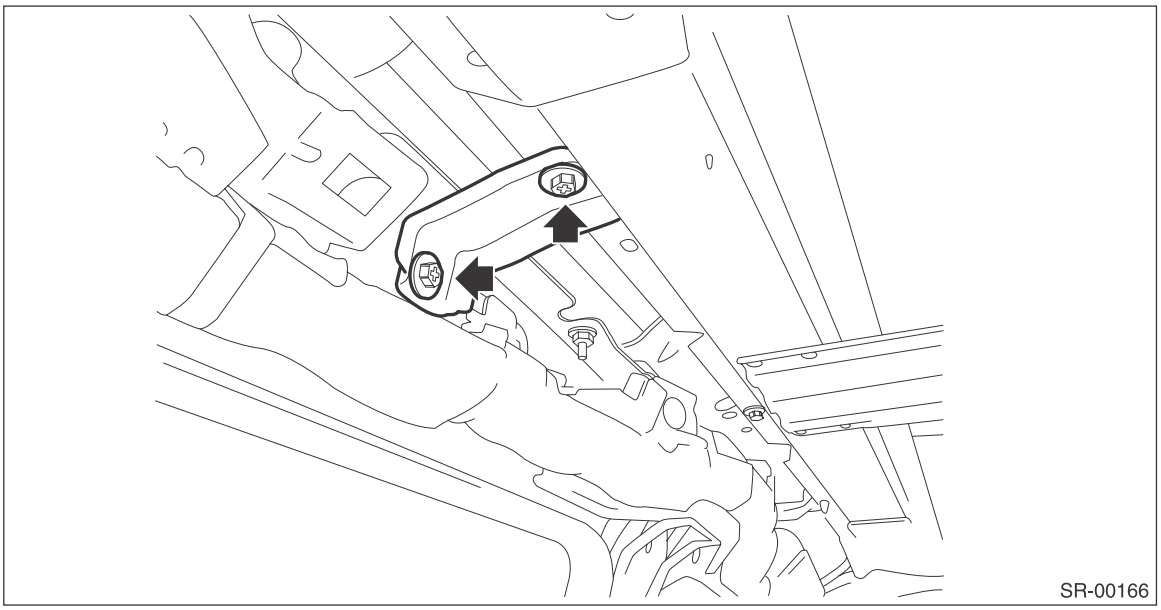

(3) Remove the bolts, then remove the frame assembly.

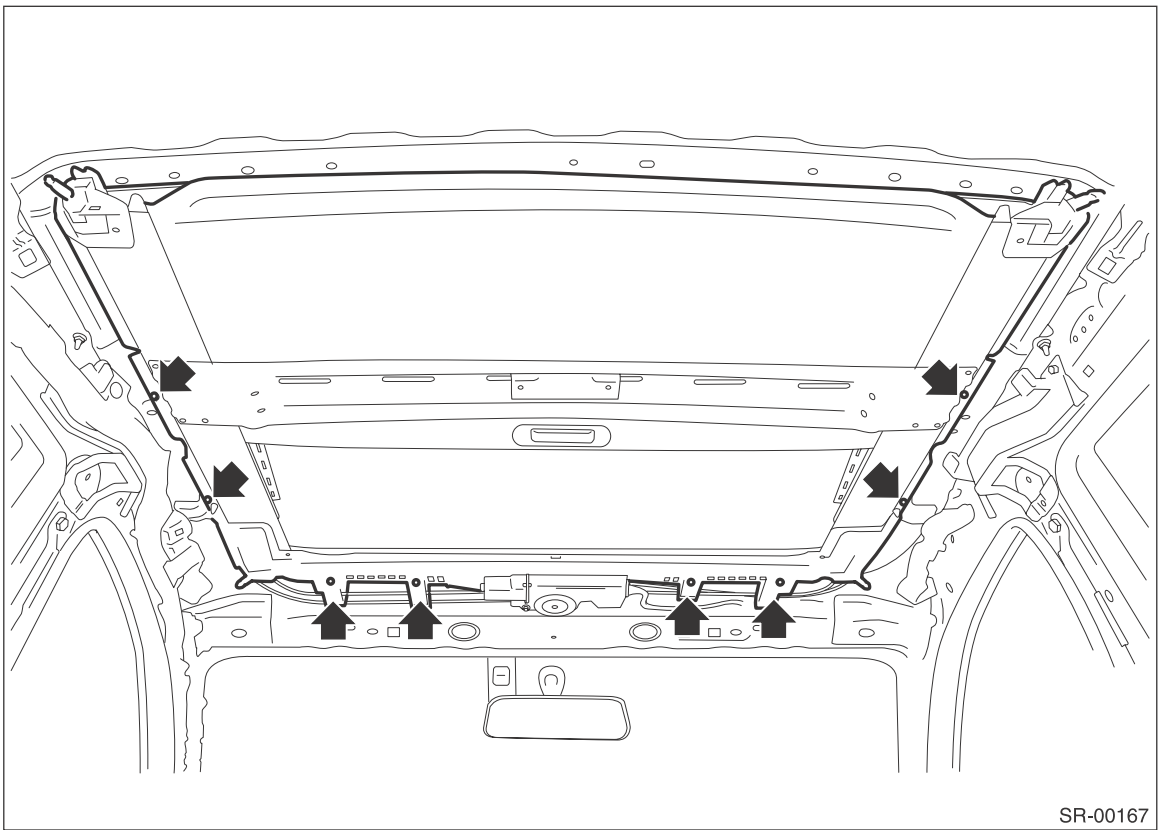

B: INSTALLATION

CAUTION:
Be careful not to snag the harness.
Install each part in the reverse order of removal.

NOTE:
- Be sure to connect the harness connector.
- When installing the drain tube, insert it securely into drain pipe.

Length A:
15 mm (0.59 in) or more

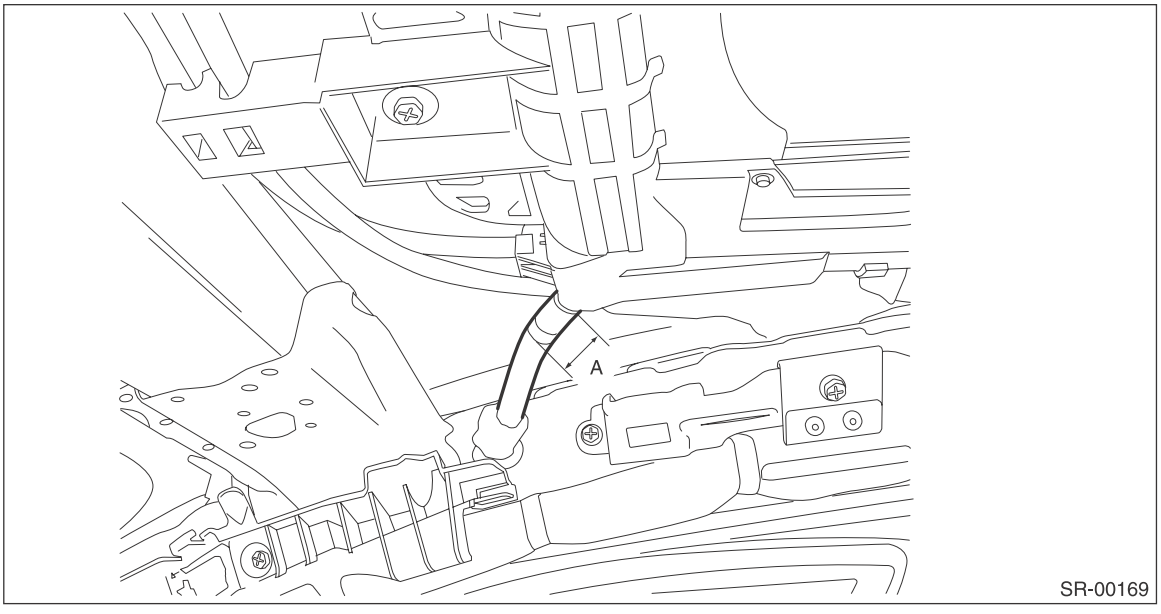

C: DISASSEMBLY

1) Remove the bolts and then remove the sunroof motor.

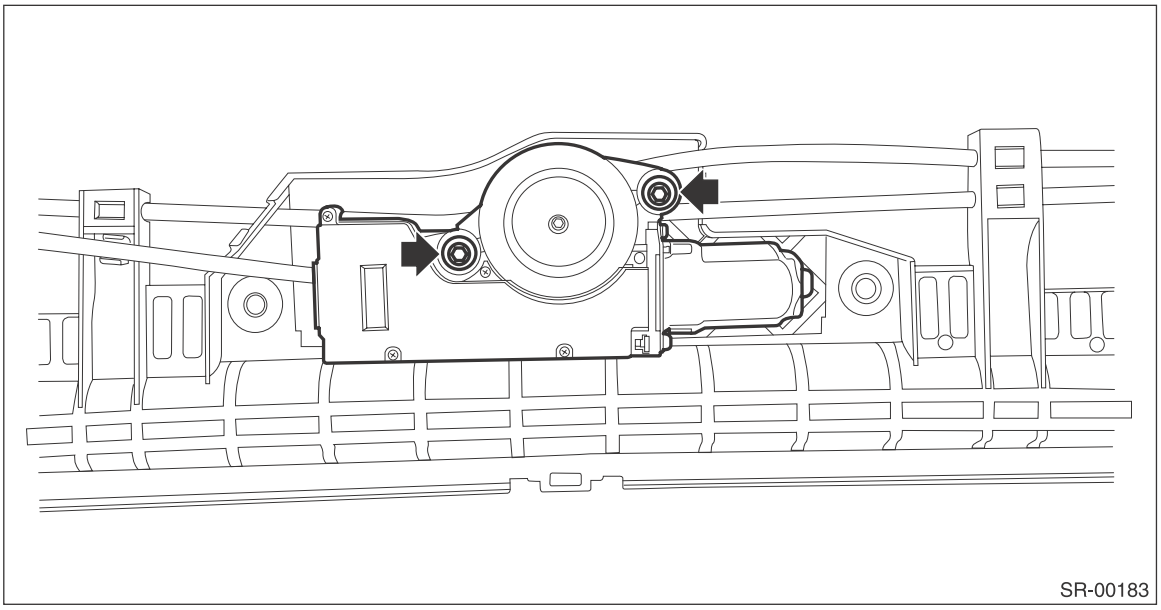

2) Remove the stopper rubber and pull out the sunshade from sunroof frame.

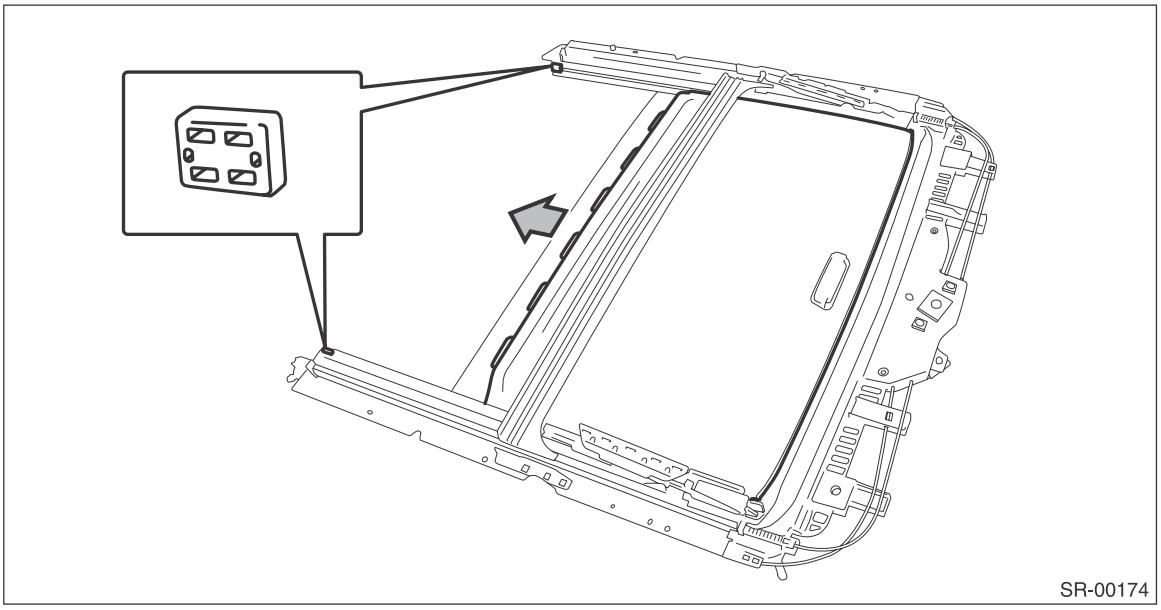

3) Remove the sunroof cable assembly.

(1) Remove the screw and remove the drain holder.

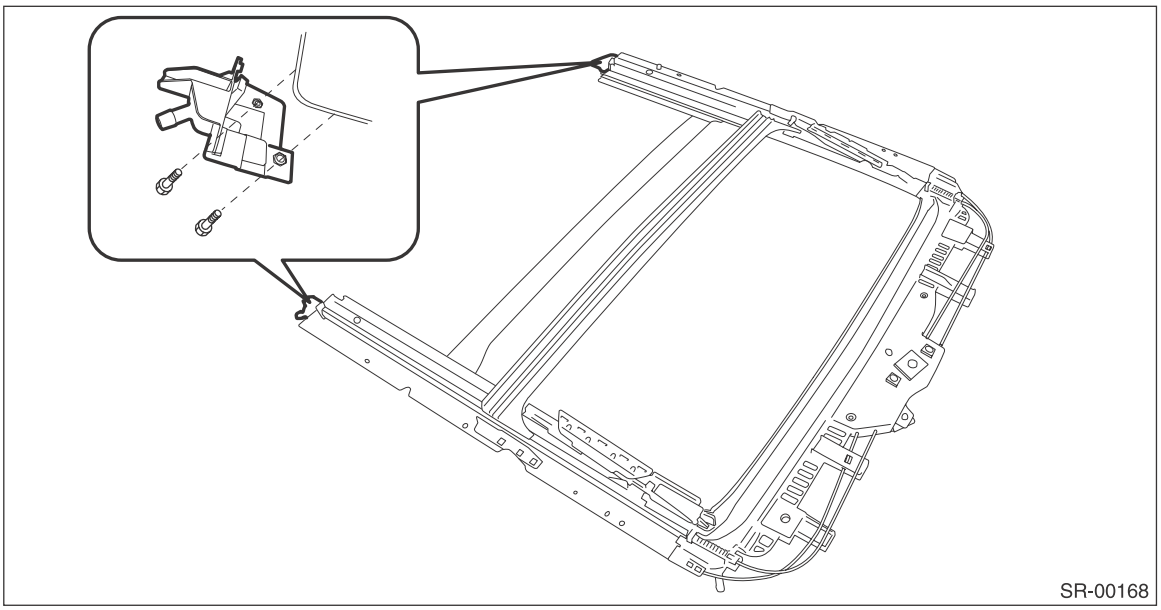

(2) Remove the screw and pull out the sunroof cable assembly from the frame roof assembly.

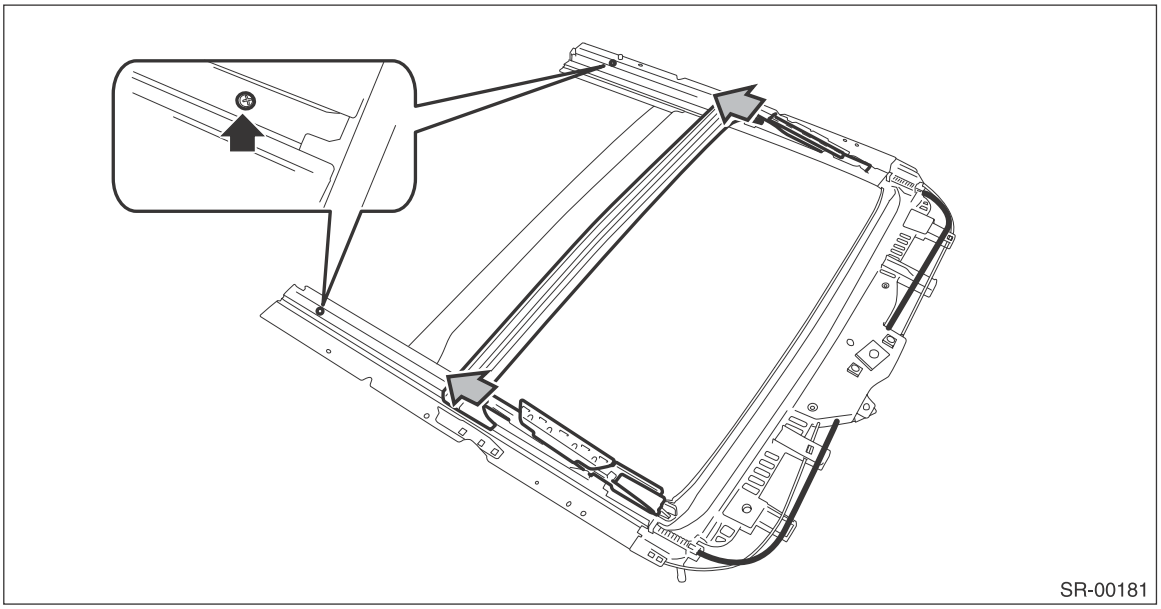

D: ASSEMBLY

Install each part in the reverse order of removal.

6. Sunroof Motor

A: REMOVAL

1) Completely close the glass lid.
2) Disconnect the ground cable from battery.
3) Remove the overhead console.
   (1) Push and open the rear end of the overhead console lid, and remove the screws.
   (2) Remove the clips and pull out the overhead console to disconnect the connectors.

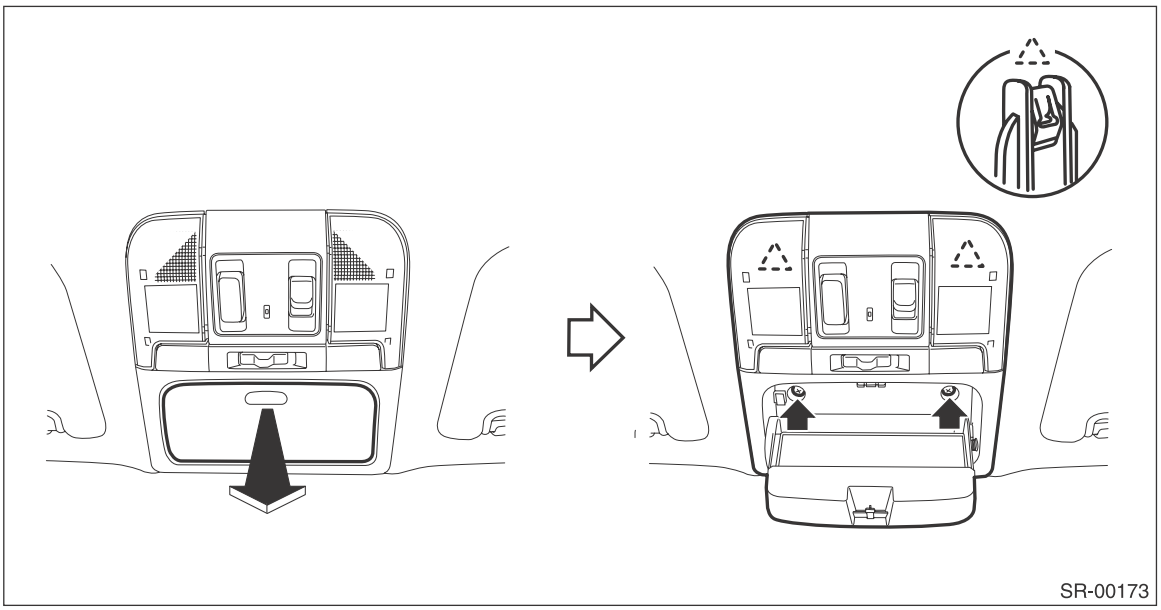

4) Remove the sunroof motor assembly.
   (1) Disconnect the connector.
   (2) Remove the bolts and remove the sunroof motor assembly.

CAUTION:
When removing the motor assembly, secure the cable wires so that it does not move.

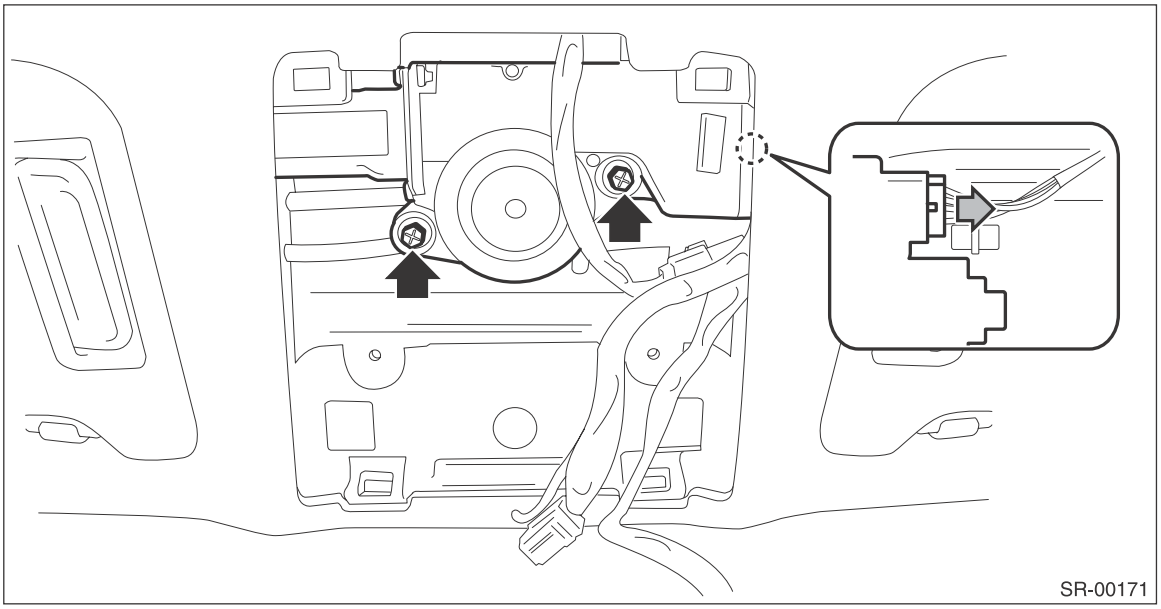

B: INSTALLATION

CAUTION:
When installing the motor assembly, be careful not to move the sunroof cable.
1) Align the lid bracket and link assembly in the same position.

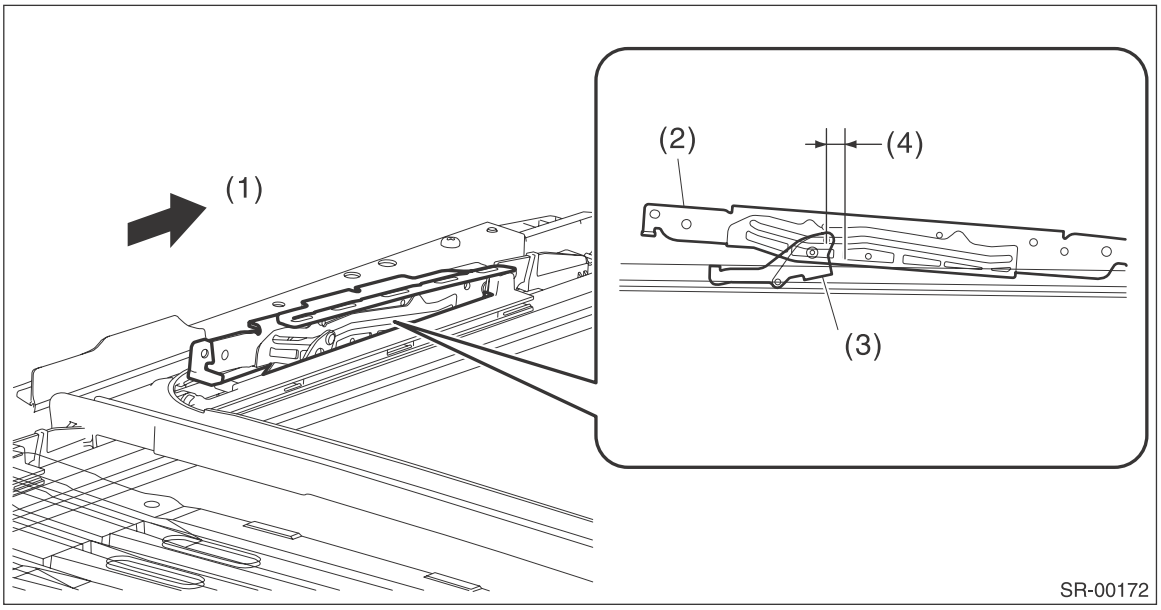

(1) Front
(2) Lid bracket
(3) Link ASSY
(4) 8.9 mm (0.35 in)

2) Install the sunroof motor assembly.
3) Install the spot map light, and connect the ground cable to the battery.
4) Perform the initialize operation. <Ref. to SR-5, INITIALIZE OPERATION, OPERATION, Sunroof Control System.>
5) Check the operation of sunroof with following table below.

Operation	Switch position
(1) Glass lid closes completely.	Close
(2) Glass lid tilt up to the top position.	Tilt up
(3) Glass lid closes completely.	Tilt down
(4) Glass lid opens 291 mm (11.46 in) away from completely closed position. (OUTBACK model)	Open
(5) Glass lid opens completely.	Open
(6) Glass lid closes completely.	Close

C: INSPECTION

Check the auto-reverse mechanism.

CAUTION:
Do not place objects in the way to check the auto-reverse mechanism.
1) Open the glass lid.
2) Forcefully push the glass lid in the opening direction while auto-closing, to check whether the window auto-reverse mechanism functions.

NOTE:
• The auto-function is cancelled when the window auto-reverse mechanism is activated more than five times.
• If the auto function is cancelled, reset it. <Ref. to SR-5, OPERATION, Sunroof Control System.>

7. Sunroof Switch

A: REMOVAL

1) Disconnect the ground cable from battery.
2) Remove the overhead console.
   (1) Push and open the rear end of the overhead console lid, and remove the screws.
   (2) Remove the clips and pull out the overhead console to disconnect the connectors.

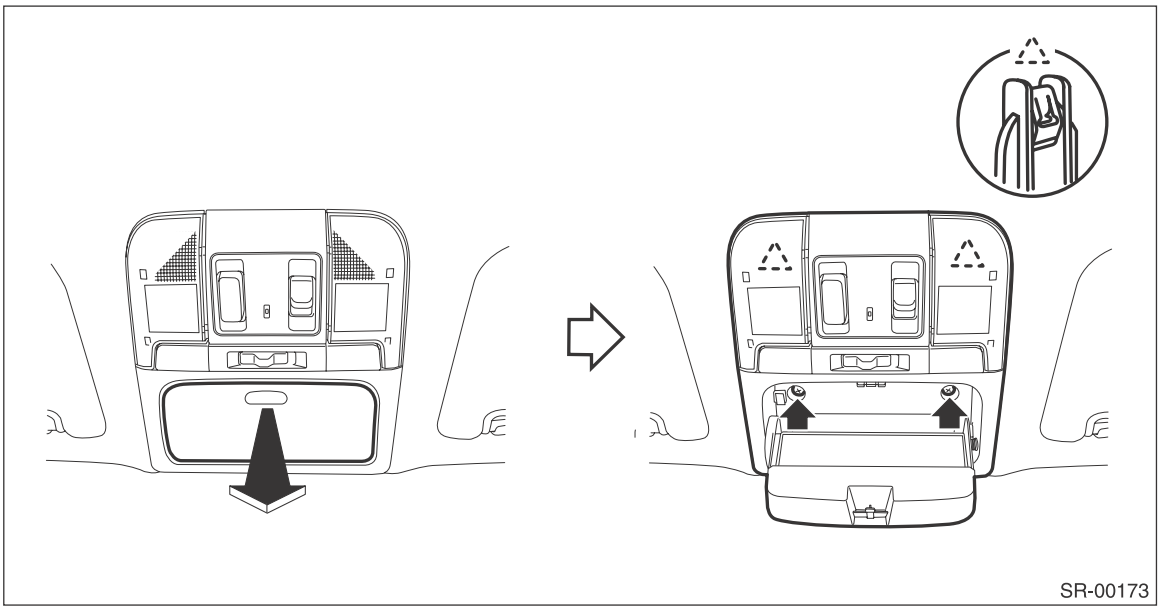

3) Release the claws and remove the sunroof switch from the overhead console.

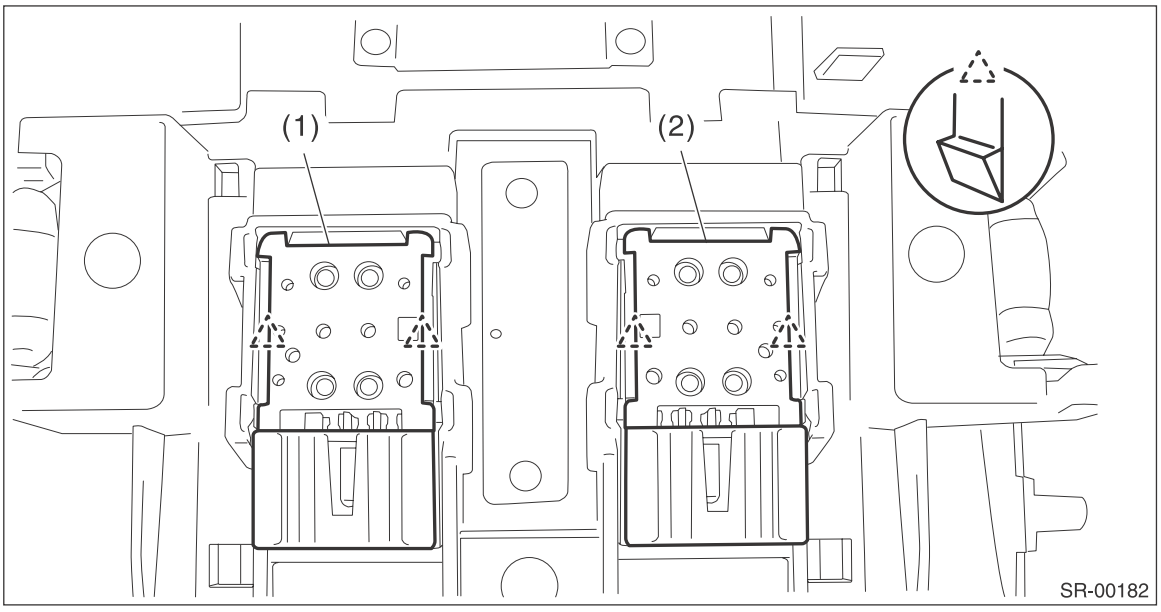

(1) Sunroof switch (tilt)
(2) Sunroof switch (slide)

B: INSTALLATION

Install each part in the reverse order of removal.

C: INSPECTION

1) Remove the overhead console.
2) Check the resistance between sunroof switch terminals.

Preparation tool: Circuit tester

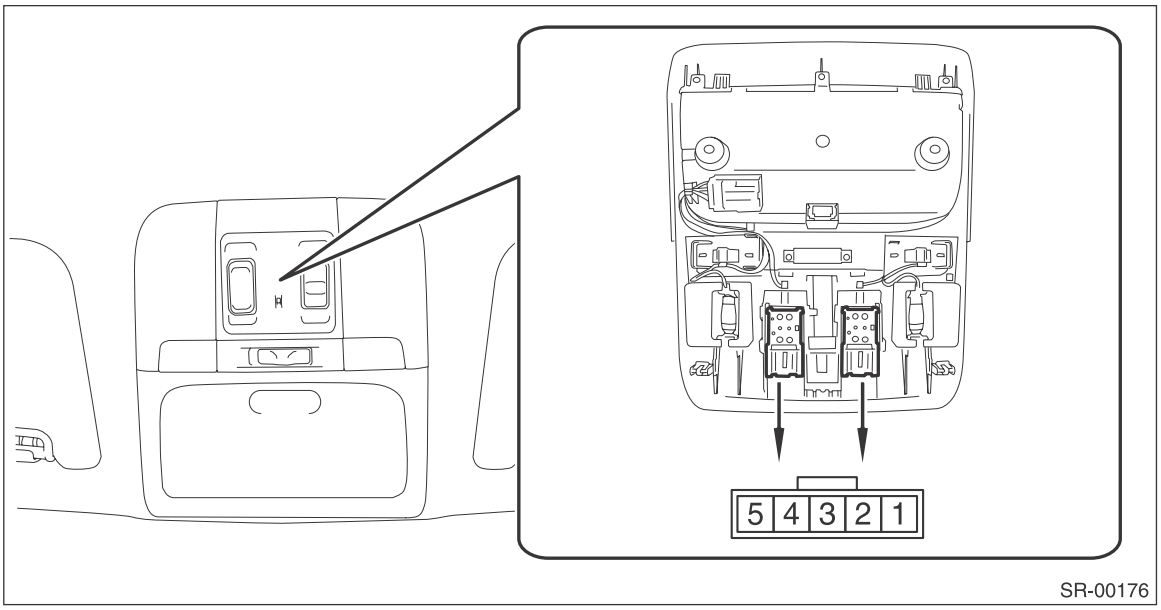

Terminal No.	Inspection conditions	Standard	Connector No.
1 — 3	Open	Less than 1 Ω	R128
4 — 3	Close	Less than 1 Ω	
1 — 3	Tilt up	Less than 1 Ω	R187
4 — 3	Tilt down	Less than 1 Ω	

3) Replace the sunroof switch if it is found defective.

8. Sunshade

A: REMOVAL

CAUTION:
When removing the clip, use great care not to damage the roof trim.

1) Remove the glass lid.
   (1) Completely close the glass lid, and then open the sunshade.
   (2) Disconnect the claws and then remove the lid cover.

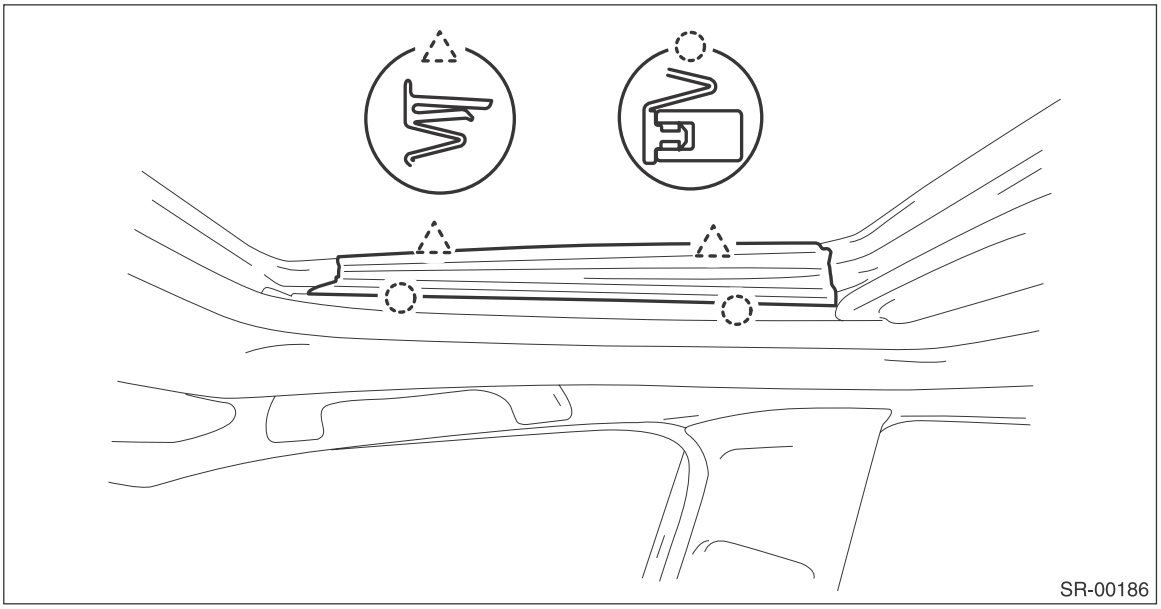

   (3) Remove the bolts, then remove the glass lid.

CAUTION:
Be careful not to damage the glass lid.

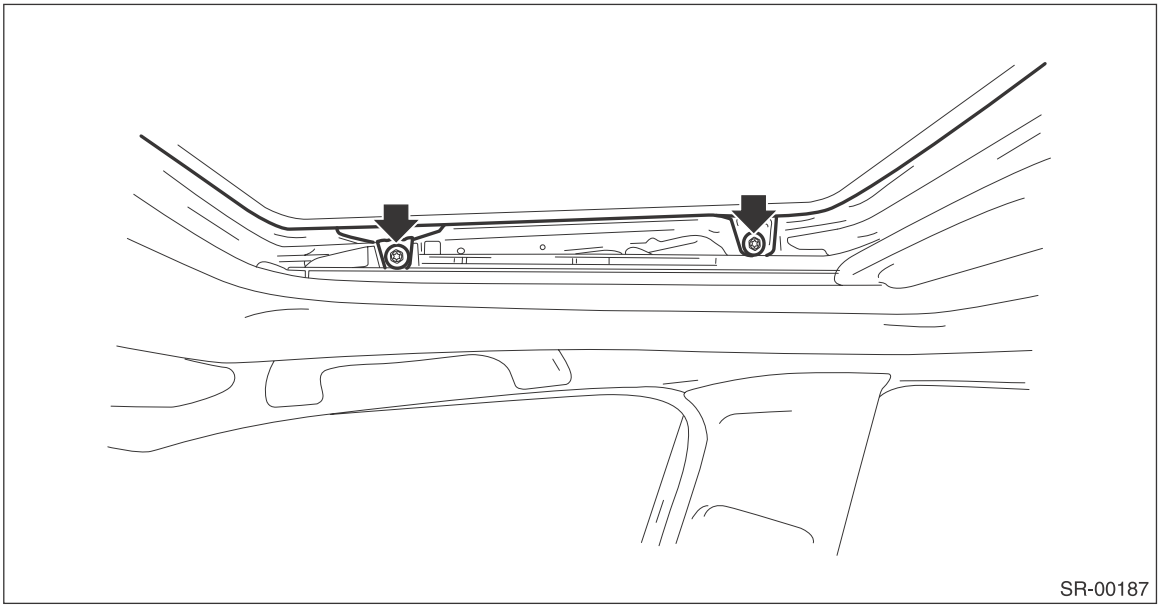

2) Remove the roof trim. <Ref. to EI-131, REMOVAL, Roof Trim.>
3) Disconnect the sunroof motor connector.
4) Remove the frame assembly.

(1) Remove the drain tube.

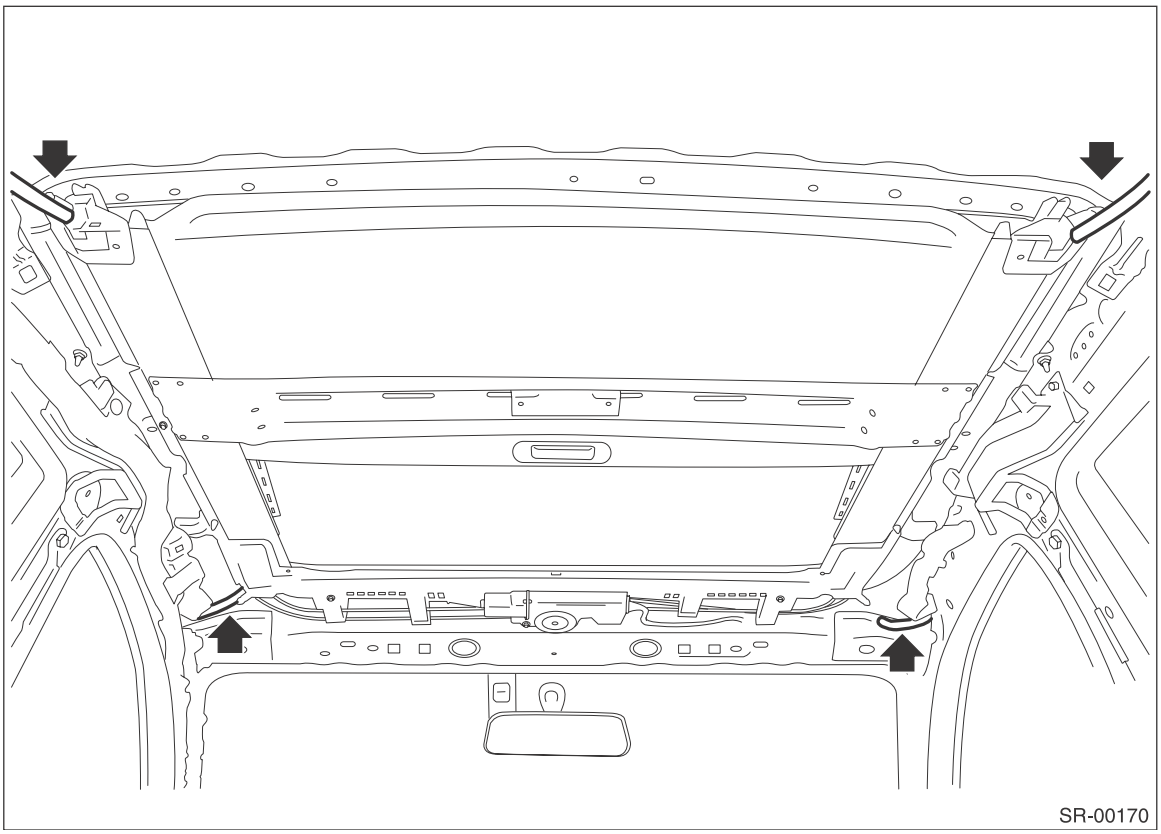

(2) Remove the bolts and then remove the sunroof bracket.

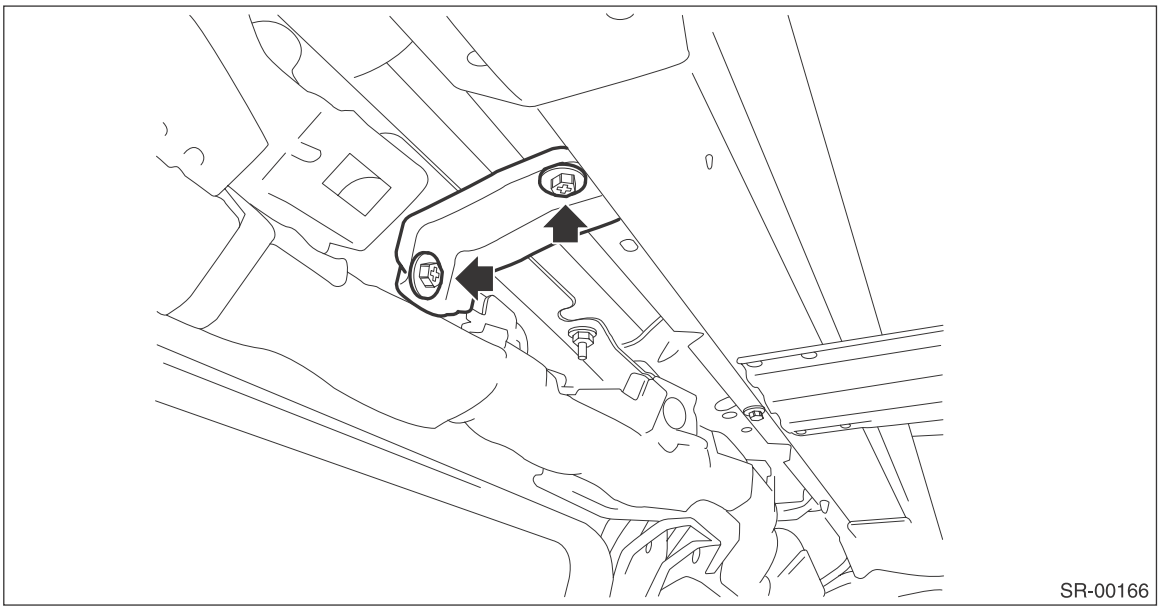

(3) Remove the bolts, then remove the frame assembly.

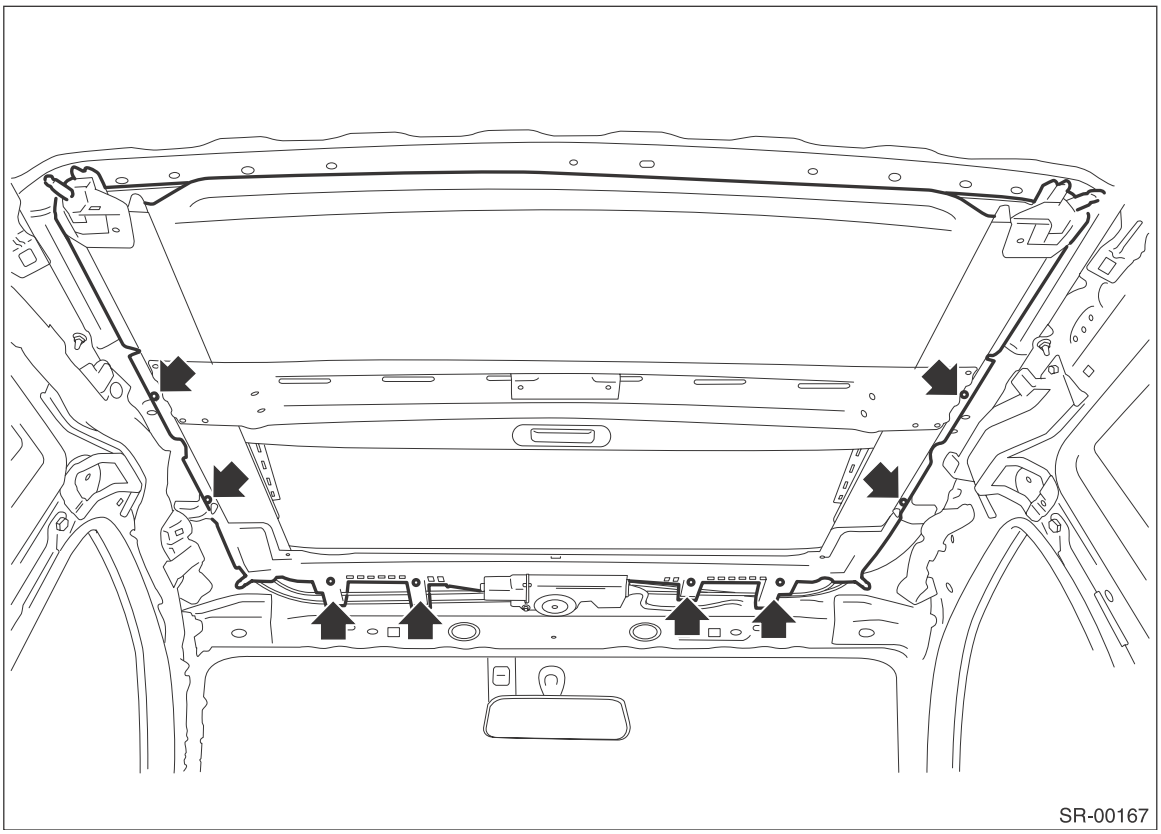

5) Remove the stopper rubber and pull out the sunshade from sunroof frame.

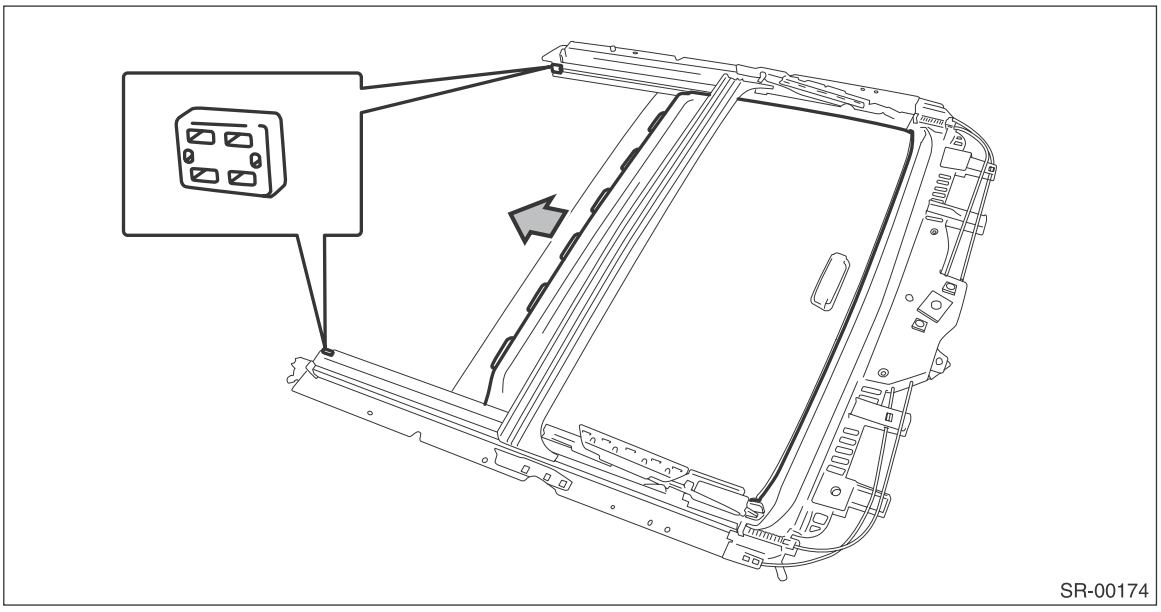

B: INSTALLATION

Install each part in the reverse order of removal.

C: INSPECTION

1. CHECK FOR MOVING LOAD OF SUNSHADE

1) Attach a spring scale to sunshade edge using a cloth.
2) Pull the spring scale to measure moving load of the sunshade.

Moving load of sunshade:
14±6 N (1.43 kgf, 3.1 lbf±0.61 kgf, 1.3 lbf)

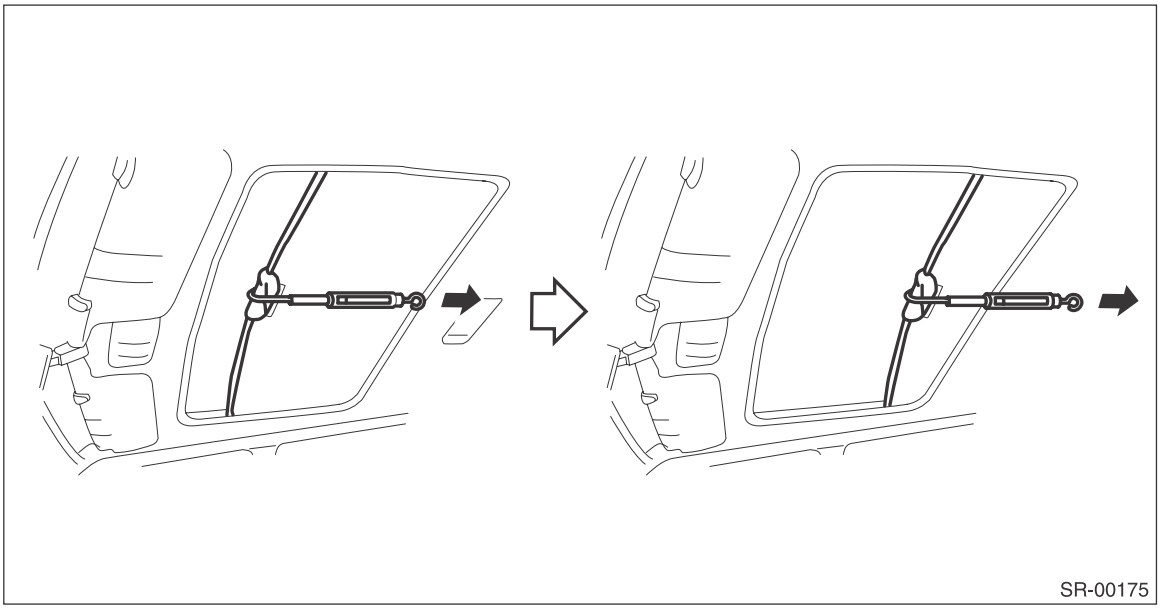

NOTE:
Moving load is larger at the beginning of pulling a spring scale, so take a spring scale reading while sunshade sliding smoothly.
3) If the inspection result exceeds the standard value, check if the installation to sunshade and frame assembly are sufficient, and replace if necessary.

EXTERIOR/INTERIOR TRIM

EI

		Page
1.	General Description	2
2.	Front Grille	26
3.	Front Hood Grille	30
4.	Cowl Panel	32
5.	Front Under Cover	35
6.	Floor Under Protector	36
7.	Fuel Tank Protector	37
8.	Mud Guard	38
9.	Front Bumper	39
10.	Rear Bumper	50
11.	Side Sill Spoiler	55
12.	Roof Molding	56
13.	Roof Rail	59
14.	Door Trim	60
15.	Instrument Panel Lower Cover	63
16.	Glove Box	65
17.	Center Console	68
18.	Console Box	72
19.	Instrument Panel Assembly	75
20.	Lower Inner Trim	95
21.	Upper Inner Trim	101
22.	Rear Quarter Trim	109
23.	Rear Shelf Trim	120
24.	Trunk Room Trim	127
25.	Sun Visor	129
26.	Assist Grip	130
27.	Roof Trim	131
28.	Rear Gate Trim	160
29.	Floor Mat	162
30.	Trunk Lid Garnish	163
31.	Rear Gate Garnish	164
32.	Heat Shield Cover	167
33.	Ornament	169

1. General Description

A: COMPONENT

1. FRONT UNDER COVER

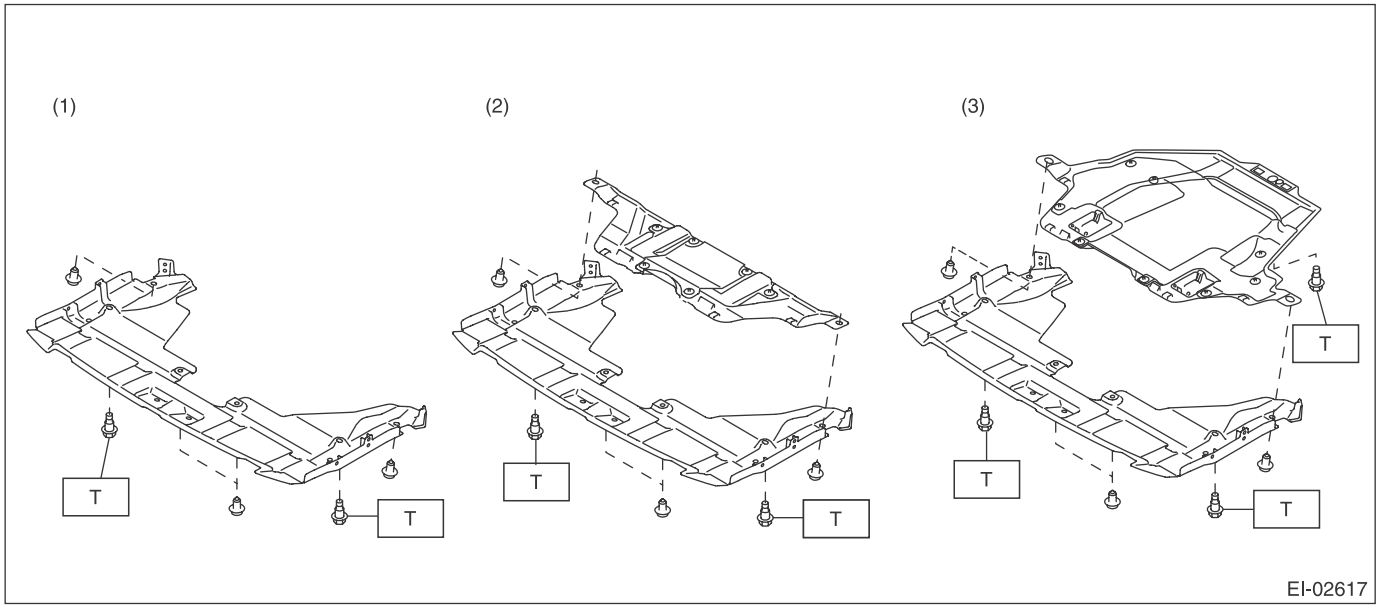

(1) Small type
(2) Medium type
(3) Large type

Tightening torque:N·m (kgf-m, ft-lb)
T: 17.5 (1.78, 12.9)

2. FLOOR UNDER PROTECTOR

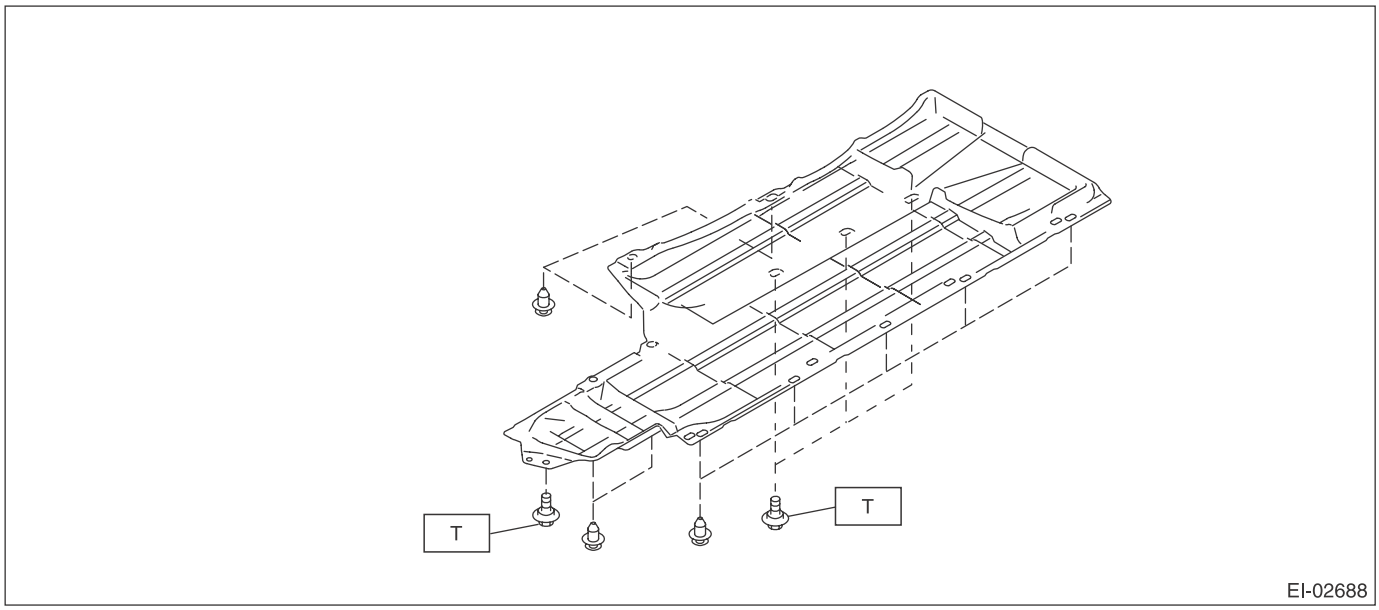

Tightening torque:N·m (kgf-m, ft-lb)
T: 7.5 (0.76, 5.5)

3. FUEL TANK PROTECTOR

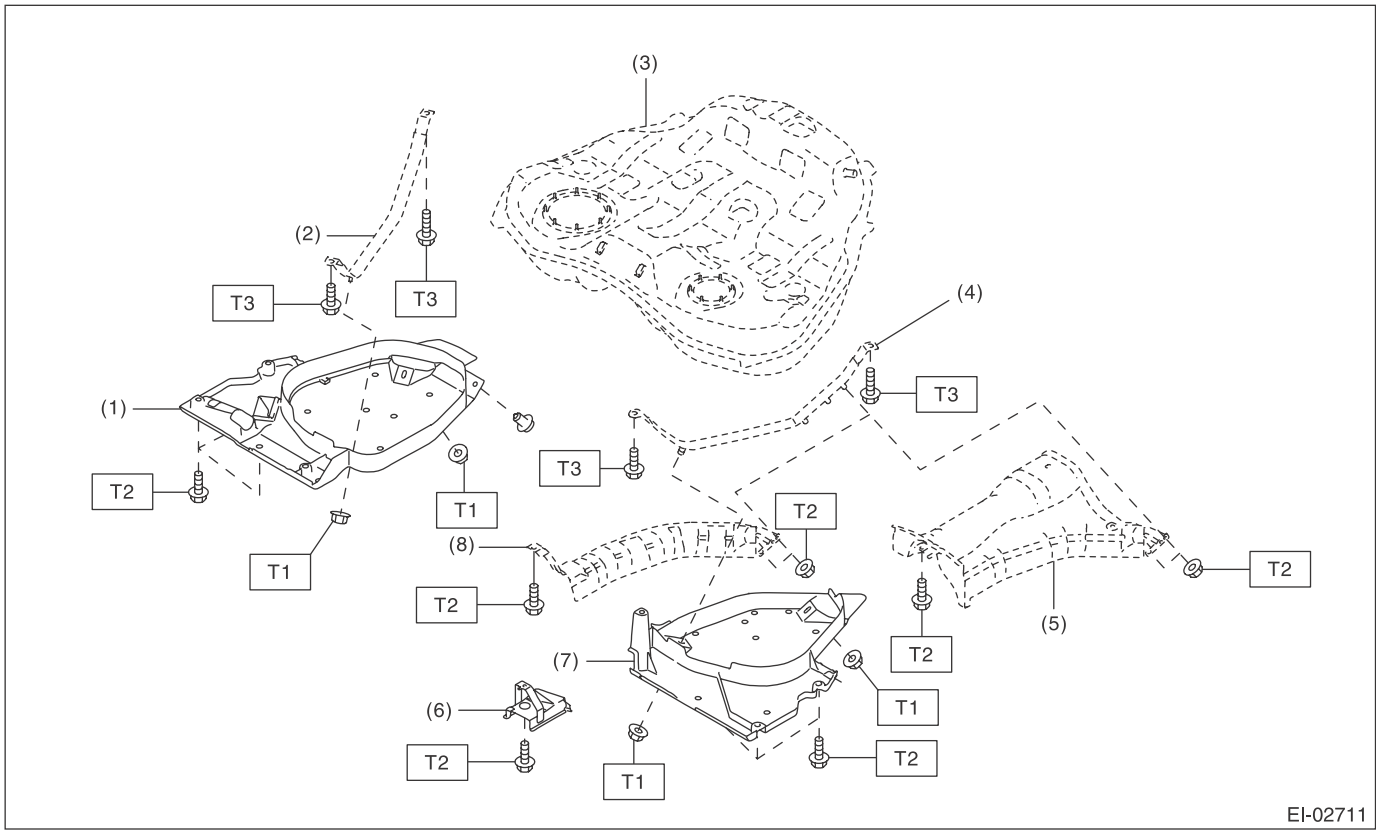

(1)	Fuel tank protector RH	(5)	Center heat shield cover (DOHC model)	***Tightening torque:N·m (kgf-m, ft-lb)***
(2)	Fuel tank band ASSY RH	(6)	Fuel tank bracket	***T1: 9 (0.92, 6.6)***
(3)	Fuel tank ASSY	(7)	Fuel tank protector LH	***T2: 18 (1.84, 13.3)***
(4)	Fuel tank band ASSY LH	(8)	Center heat shield cover (SOHC model)	***T3: 33 (3.36, 24.3)***

4. FRONT HOOD GRILLE

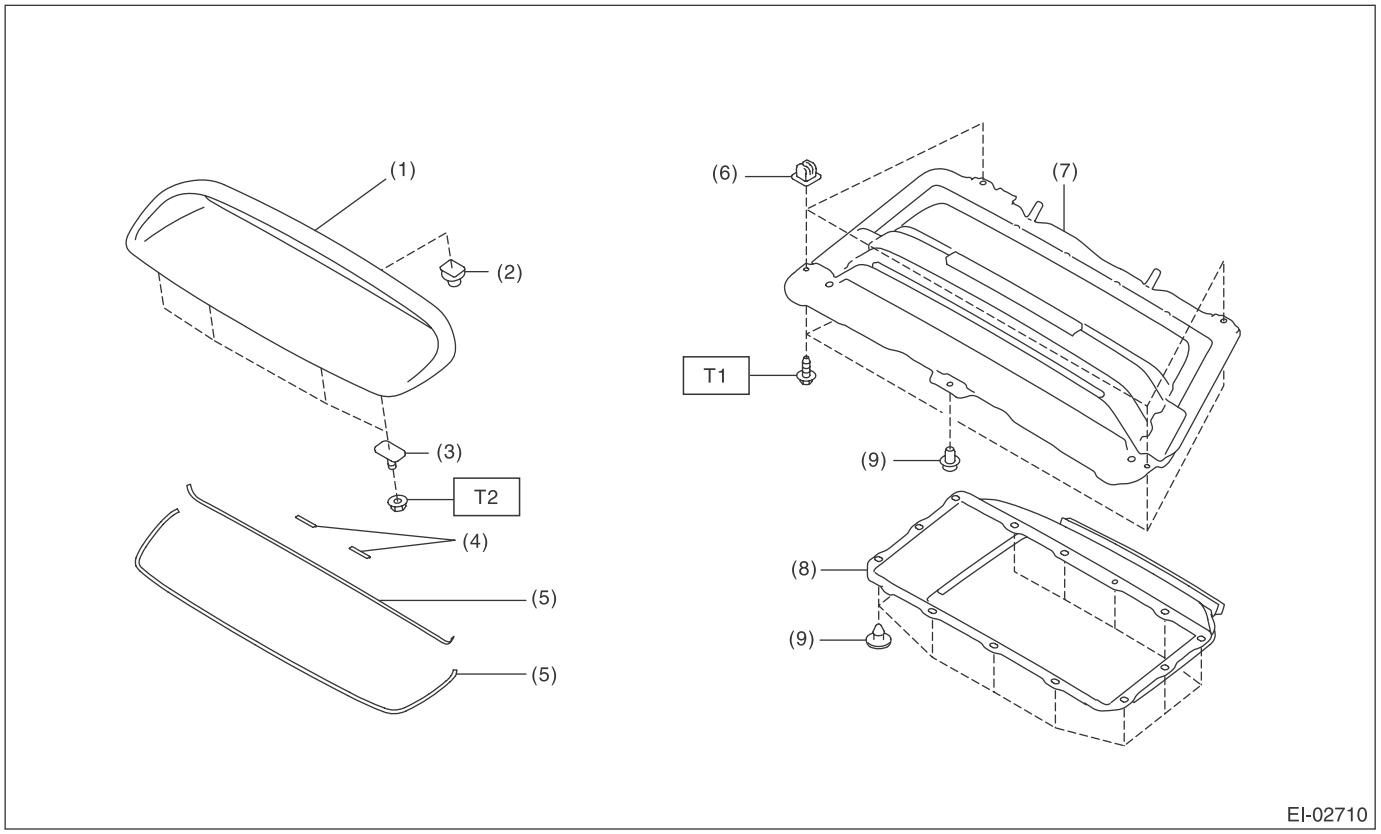

(1) Front hood grille
(2) Clip anchor
(3) Bolt
(4) Protector
(5) Gasket
(6) Grommet
(7) Hood duct
(8) Hood duct inner
(9) Clip

Tightening torque:N·m (kgf-m, ft-lb)
T1: 1.0 (0.1, 0.7)
T2: 4.5 (0.46, 3.3)

5. FRONT BUMPER

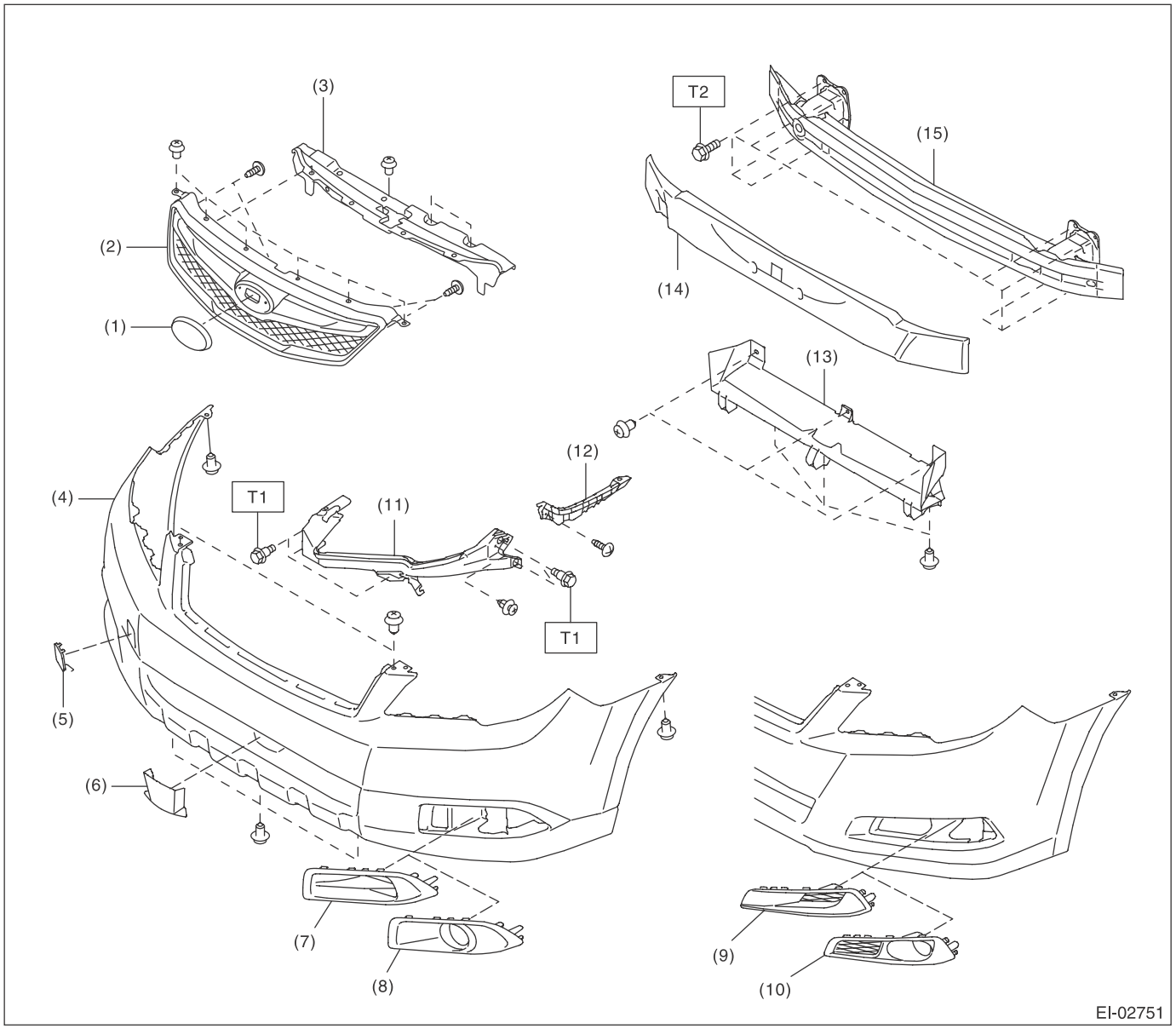

(1) Floor ornament
(2) Front grille ASSY
(3) Grille bracket
(4) FRONT BUMPER FACE
(5) Front hook cover
(6) Bumper cover CTR
(7) Bumper cover (OUTBACK model)
(8) Fog light cover (OUTBACK model)
(9) Bumper cover (Sedan model)
(10) Fog light cover (Sedan model)
(11) Bracket corner front
(12) Bracket side front UPR
(13) Bracket center LWR front
(14) E/A foam front
(15) Beam COMPL front

Tightening torque:N·m (kgf-m, ft-lb)
T1: 7.5 (0.76, 5.5)
T2: 32 (3.26, 23.6)

6. REAR BUMPER

- Sedan model

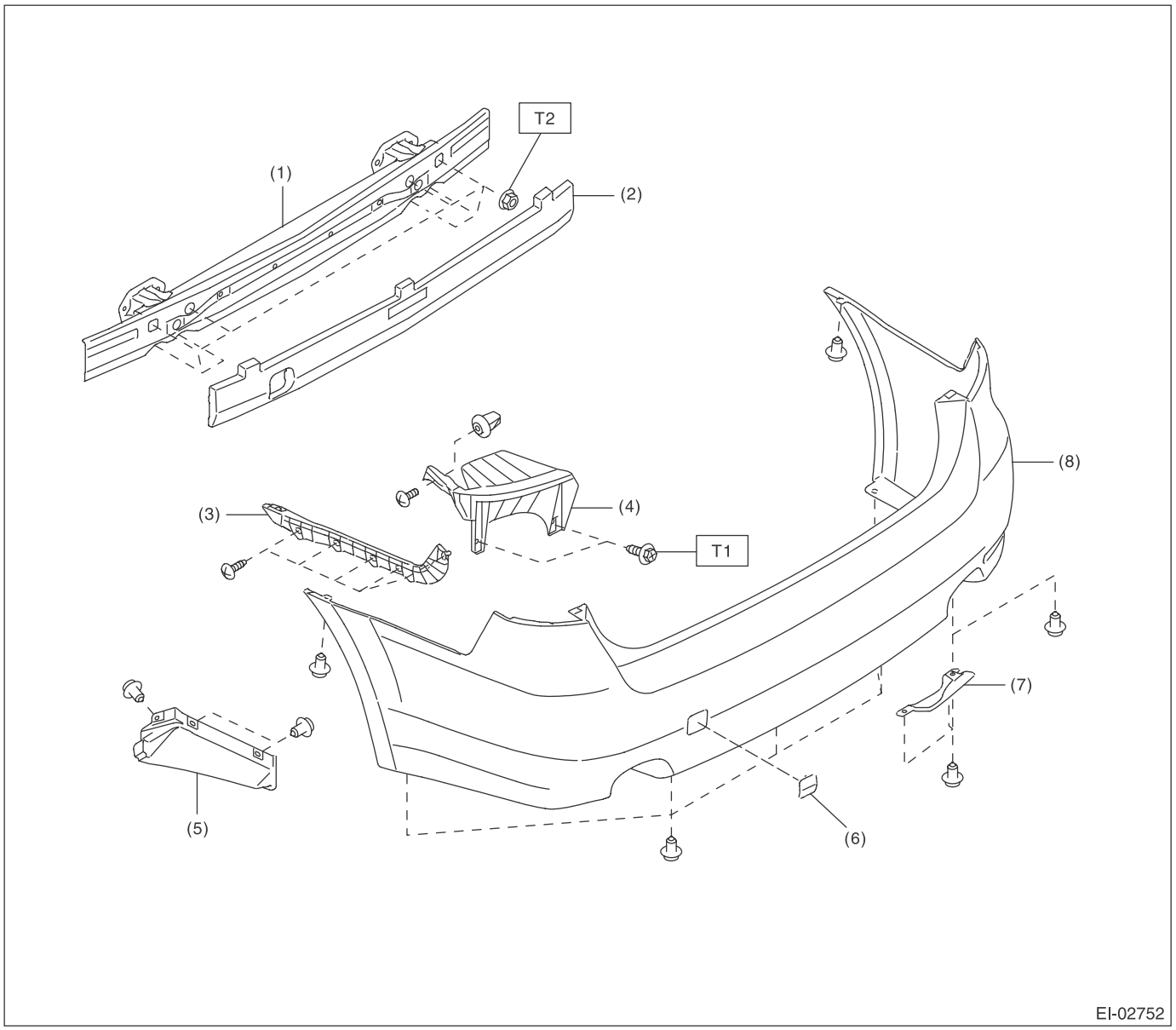

(1)	Beam COMPL rear	(5)	Bracket side rear LWR
(2)	E/A foam rear	(6)	Rear hook cover
(3)	Bracket side rear UPR	(7)	Bumper cover rear
(4)	Bracket corner rear	(8)	REAR BUMPER FACE

Tightening torque:N·m (kgf-m, ft-lb)
T1: 7.5 (0.76, 5.5)
T2: 45 (4.6, 33.2)

- OUTBACK model

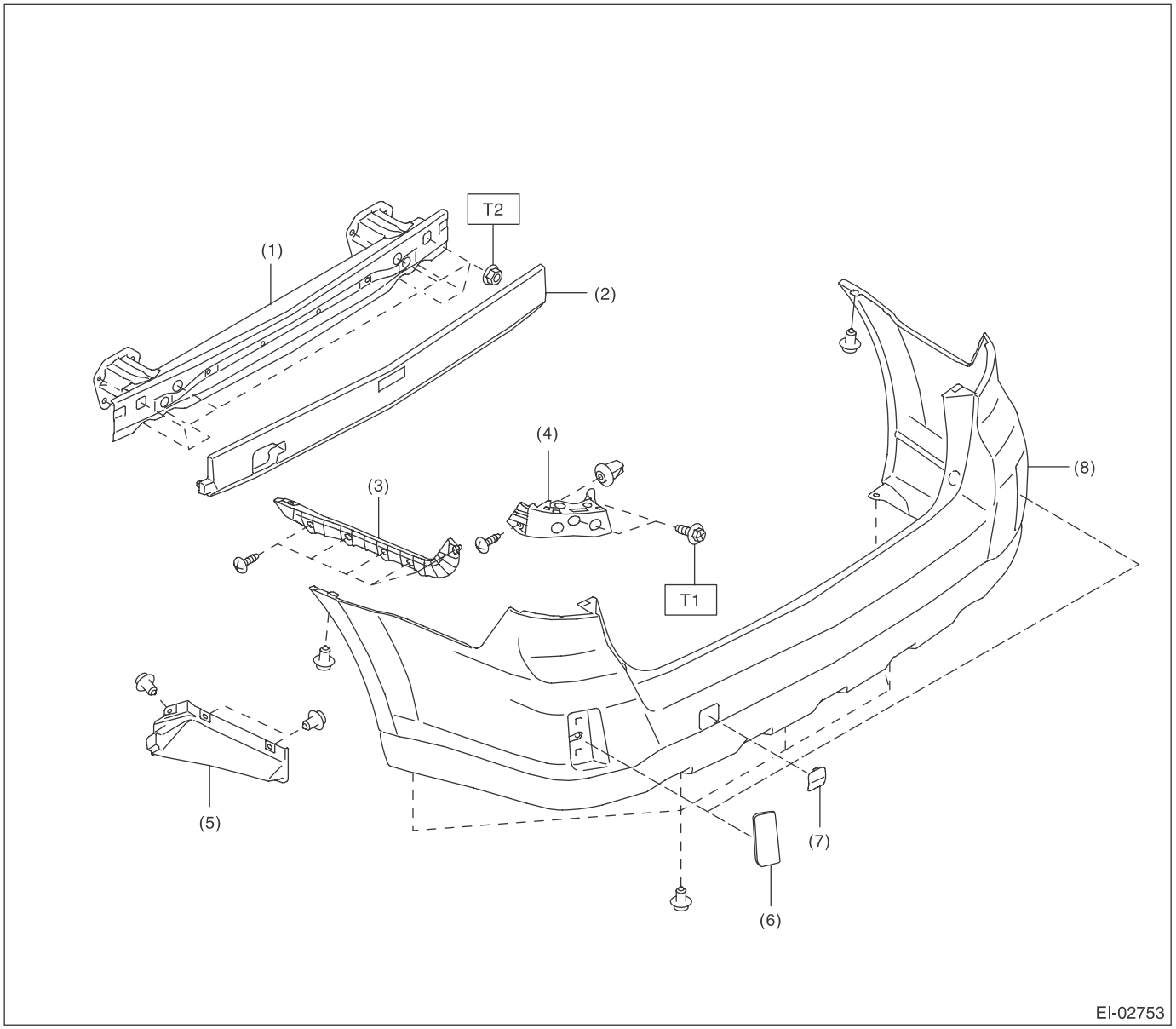

(1)	Beam COMPL rear	(5)	Bracket side rear LWR
(2)	E/A foam rear	(6)	Reflex reflector
(3)	Bracket side rear UPR	(7)	Rear hook cover
(4)	Bracket corner rear	(8)	Rear bumper face

Tightening torque:N·m (kgf-m, ft-lb)
T1: 7.5 (0.76, 5.5)
T2: 45 (4.6, 33.2)

7. MUD GUARD

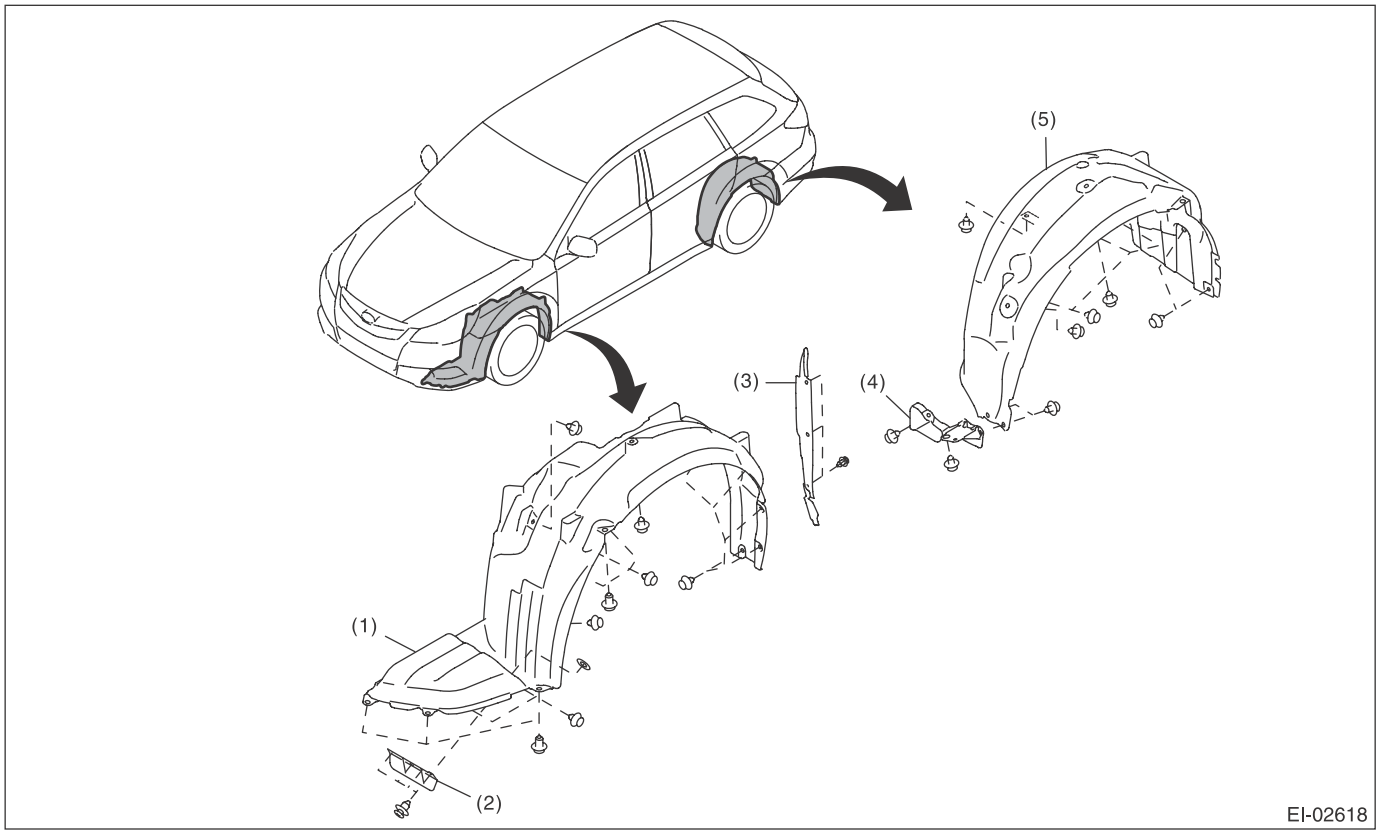

(1) Front mud guard
(2) Front air flap plate
(3) Fender cover lower
(4) Rear air flap plate
(5) Rear mud guard

8. COWL PANEL

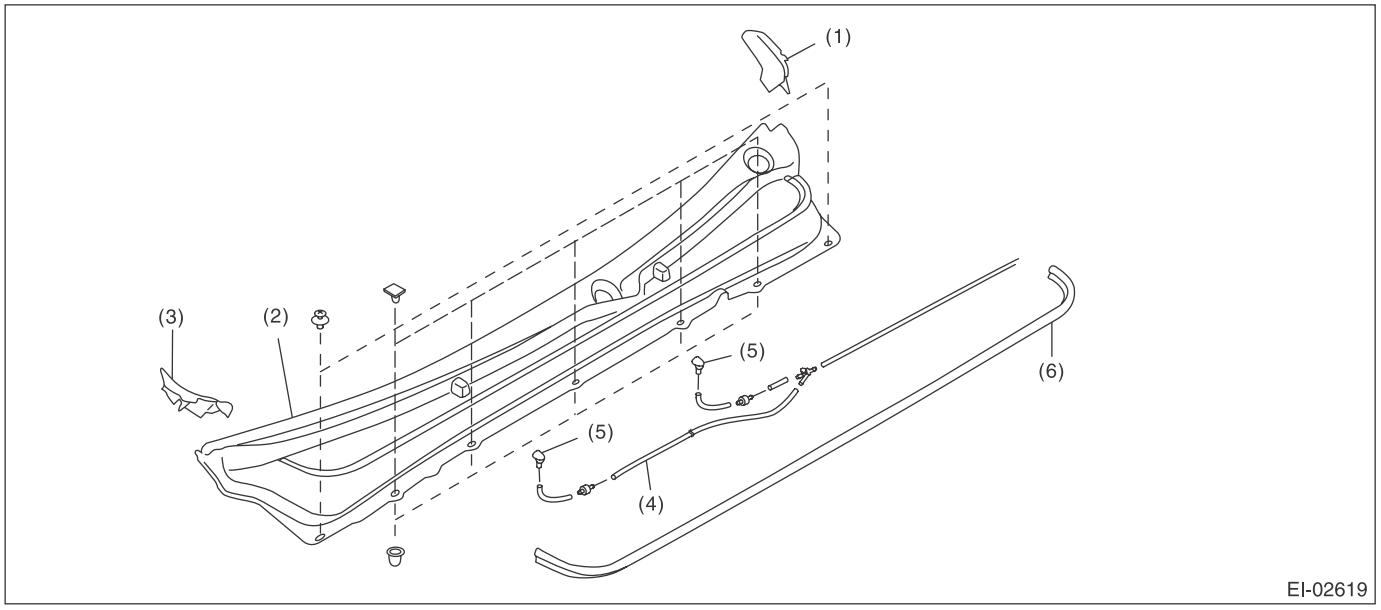

(1) Cowl panel side LH
(2) Cowl panel
(3) Cowl panel side RH
(4) Washer hose
(5) Washer nozzle
(6) Cowl panel seal

9. SIDE SILL SPOILER

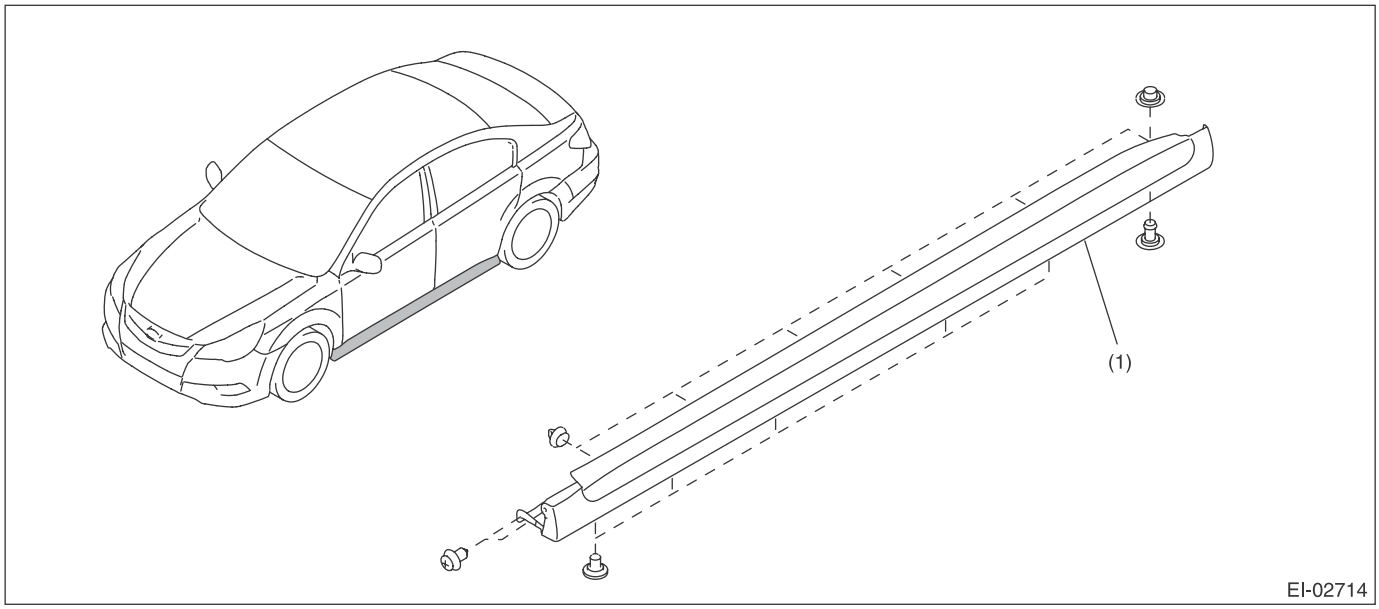

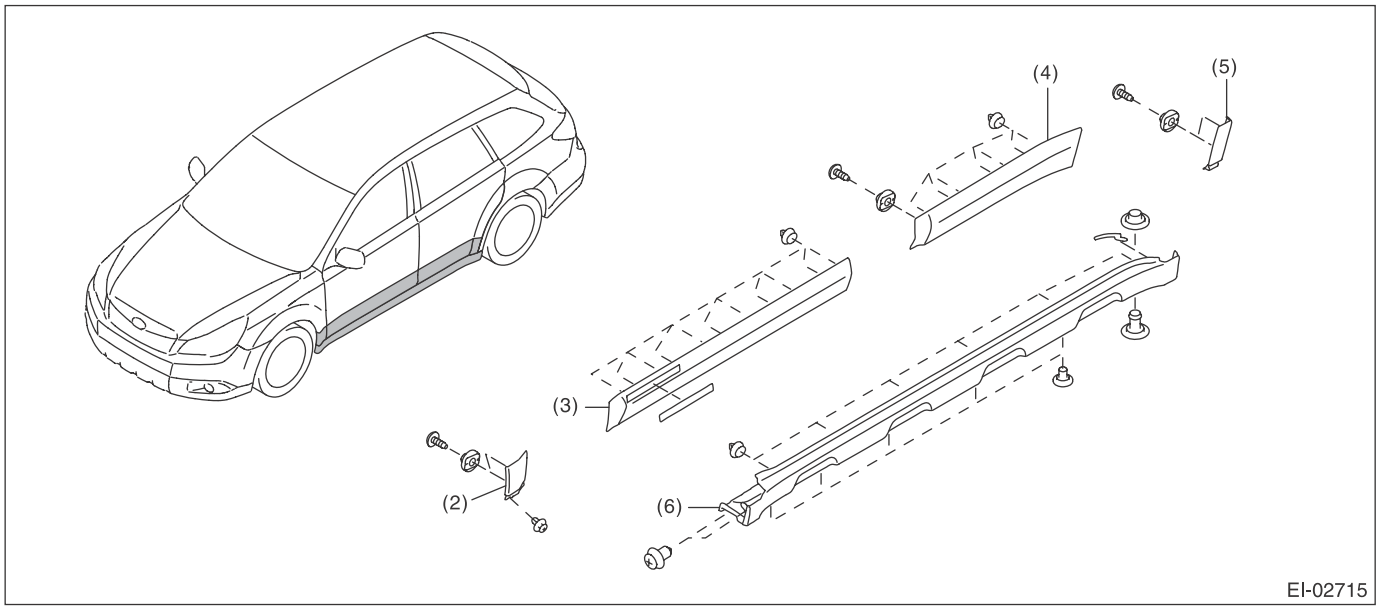

(1) Side sill garnish ASSY (Sedan model)
(2) Garnish ASSY front fender (OUTBACK model)
(3) Garnish ASSY front door (OUTBACK model)
(4) Garnish ASSY rear door (OUTBACK model)
(5) Garnish ASSY rear quarter (OUTBACK model)
(6) Side sill garnish ASSY (OUTBACK model)

10.ROOF MOLDING

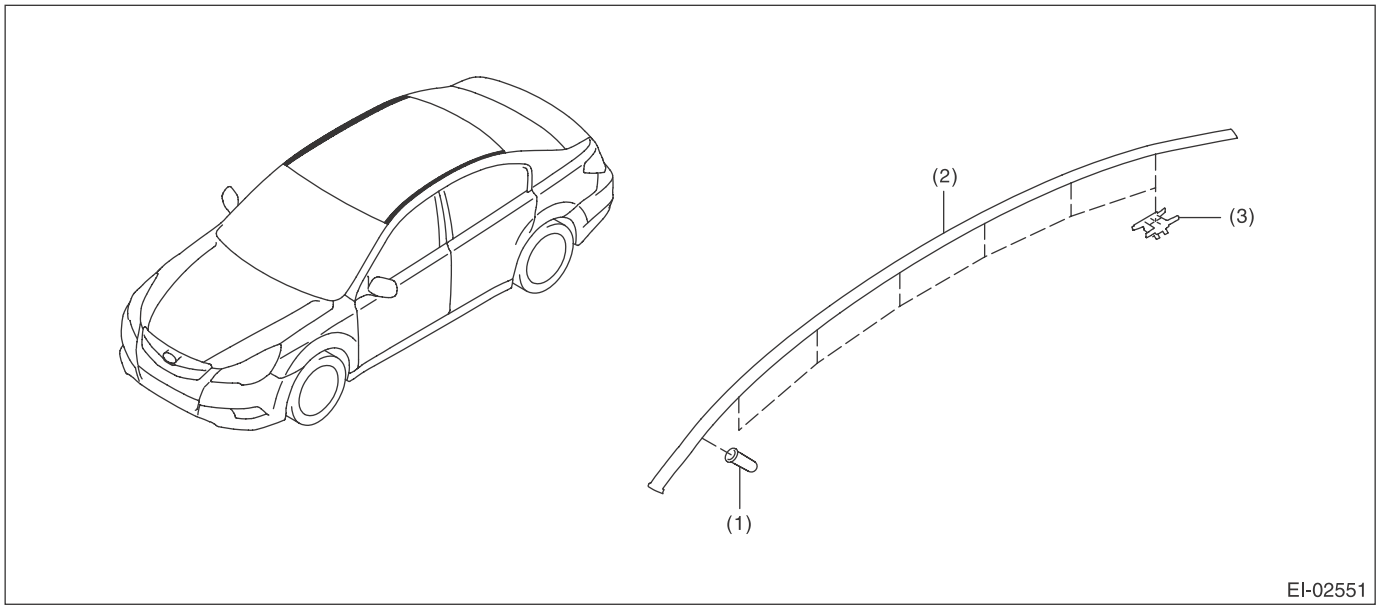

(1) Rivet
(2) Roof molding
(3) Clip

11.ROOF RAIL

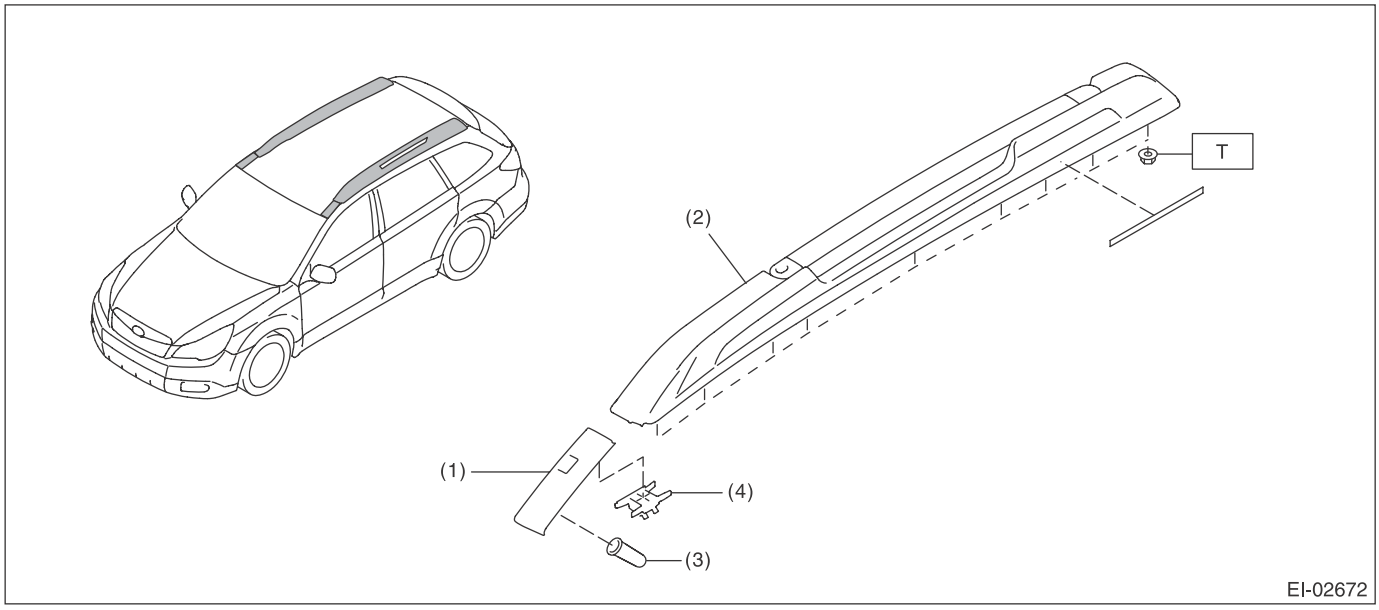

(1) Roof molding
(2) Roof rail ASSY
(3) Rivet
(4) Clip

Tightening torque:N·m (kgf-m, ft-lb)
T: 7.5 (0.76, 5.5)

12.TRUNK LID GARNISH

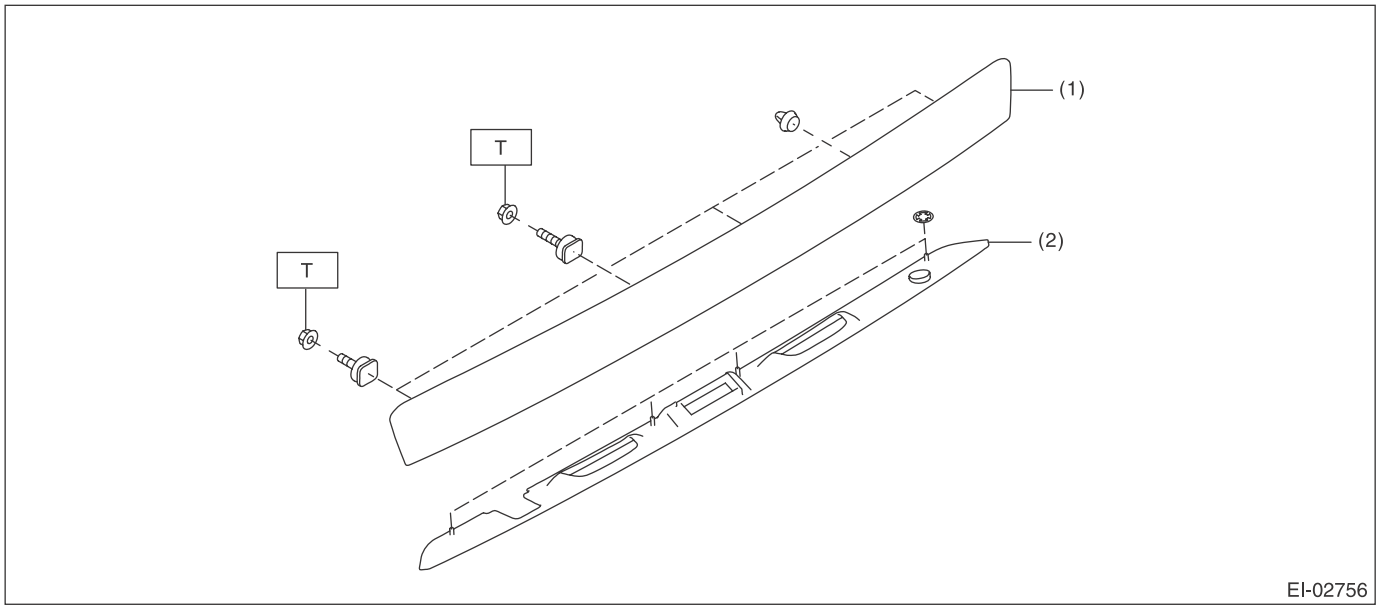

(1) Trunk lid garnish
(2) Trunk lid garnish under cover

Tightening torque:N·m (kgf-m, ft-lb)
T: 4.5 (0.46, 3.3)

13.REAR GATE GARNISH

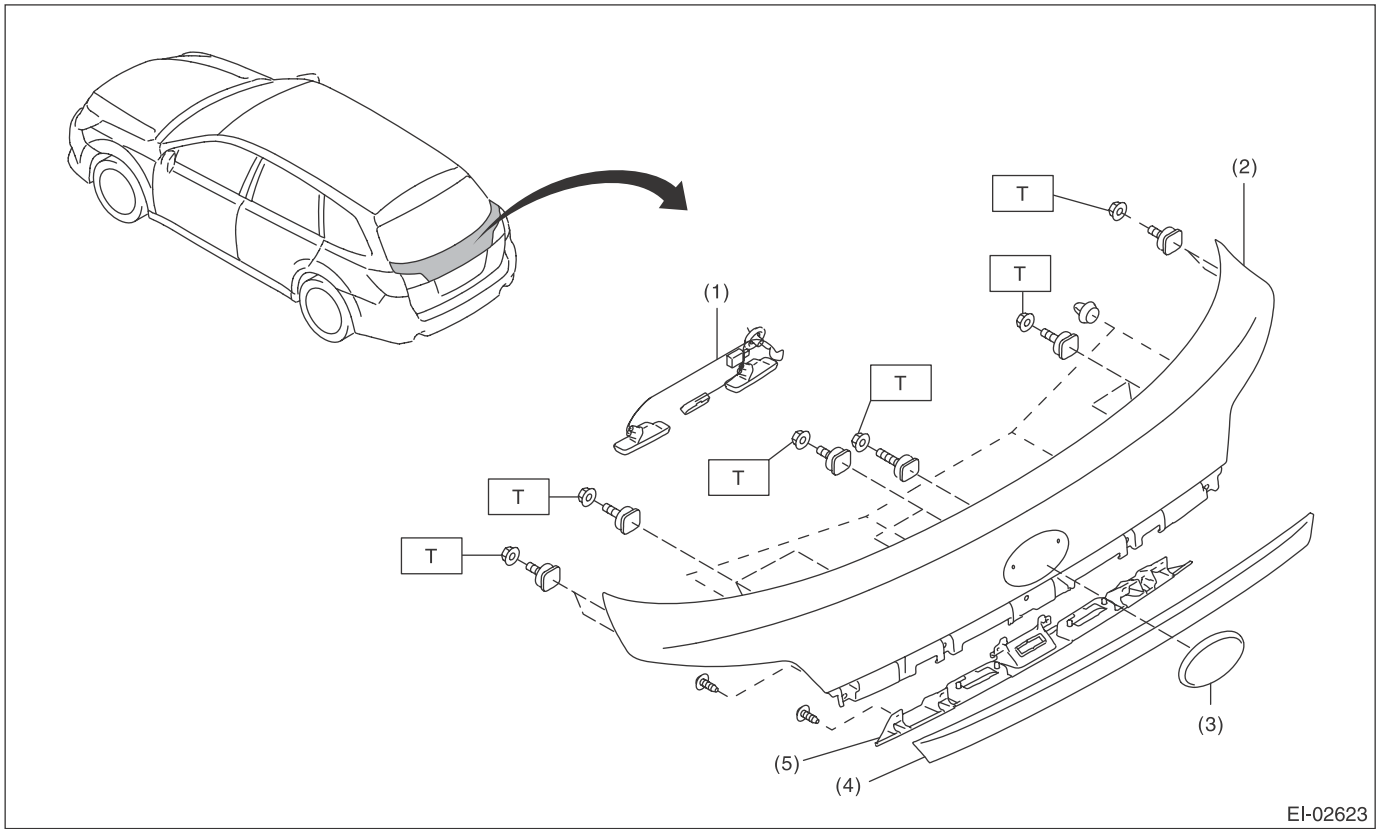

(1) Rear gate opener ASSY harness
(2) Rear gate garnish
(3) Ornament
(4) Molding
(5) Garnish LWR

Tightening torque:N·m (kgf-m, ft-lb)
T: 4.5 (0.46, 3.3)

14.DOOR TRIM

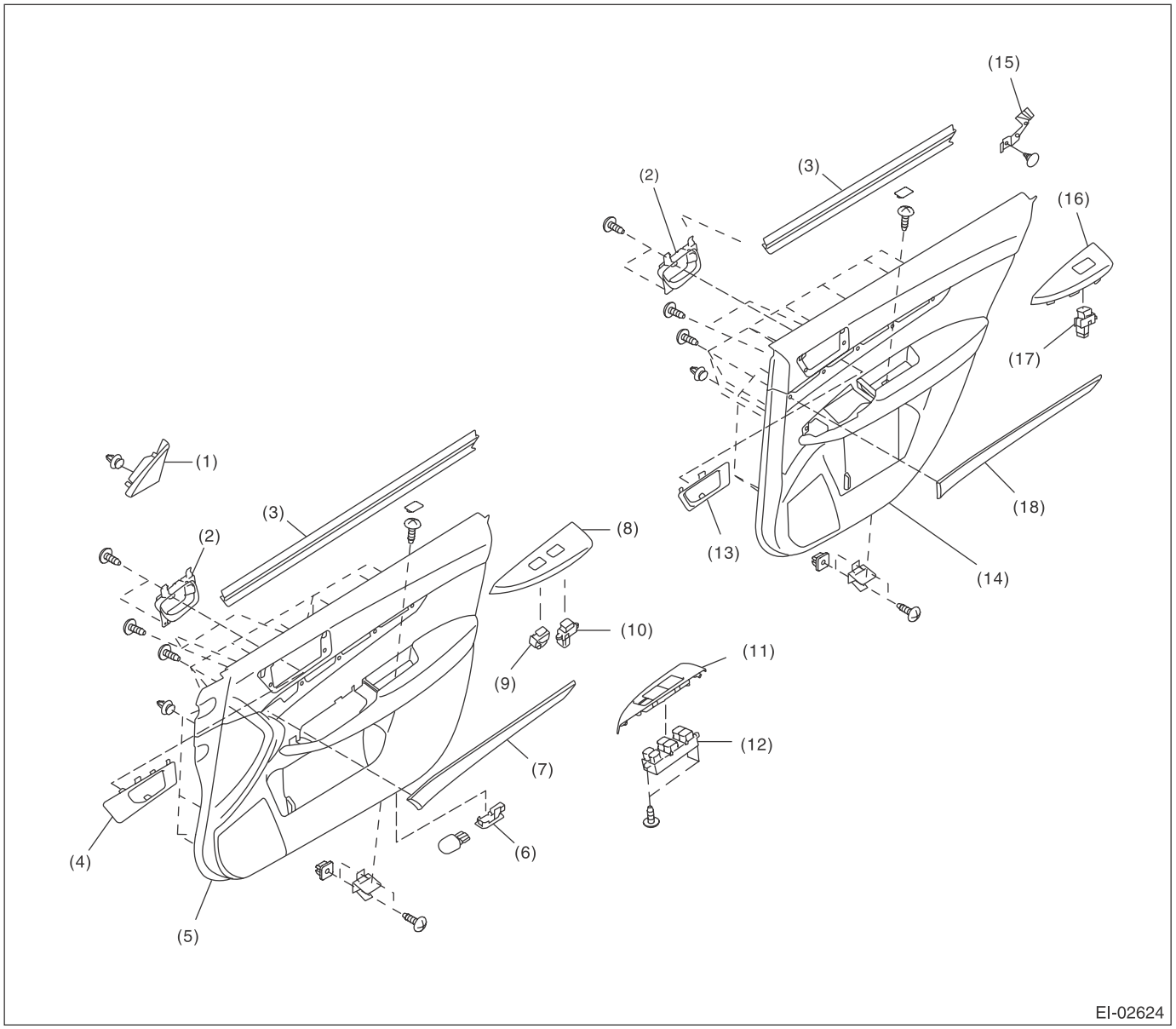

(1)	Gusset cover front	(7)	Front door ornament panel	(13)	Rear door inner remote cover
(2)	Inner remote ASSY	(8)	Power window switch panel front RH	(14)	Rear door trim
(3)	Weather strip inner	(9)	Door lock switch ASSY	(15)	Rear door cover upper
(4)	Front door inner remote cover	(10)	Power window sub-switch ASSY front	(16)	Power window switch panel rear
(5)	Front door trim ASSY	(11)	Power window switch panel front LH	(17)	Power window sub-switch ASSY rear
(6)	Door step light	(12)	Power window main switch ASSY	(18)	Rear door ornament panel

15.CONSOLE BOX

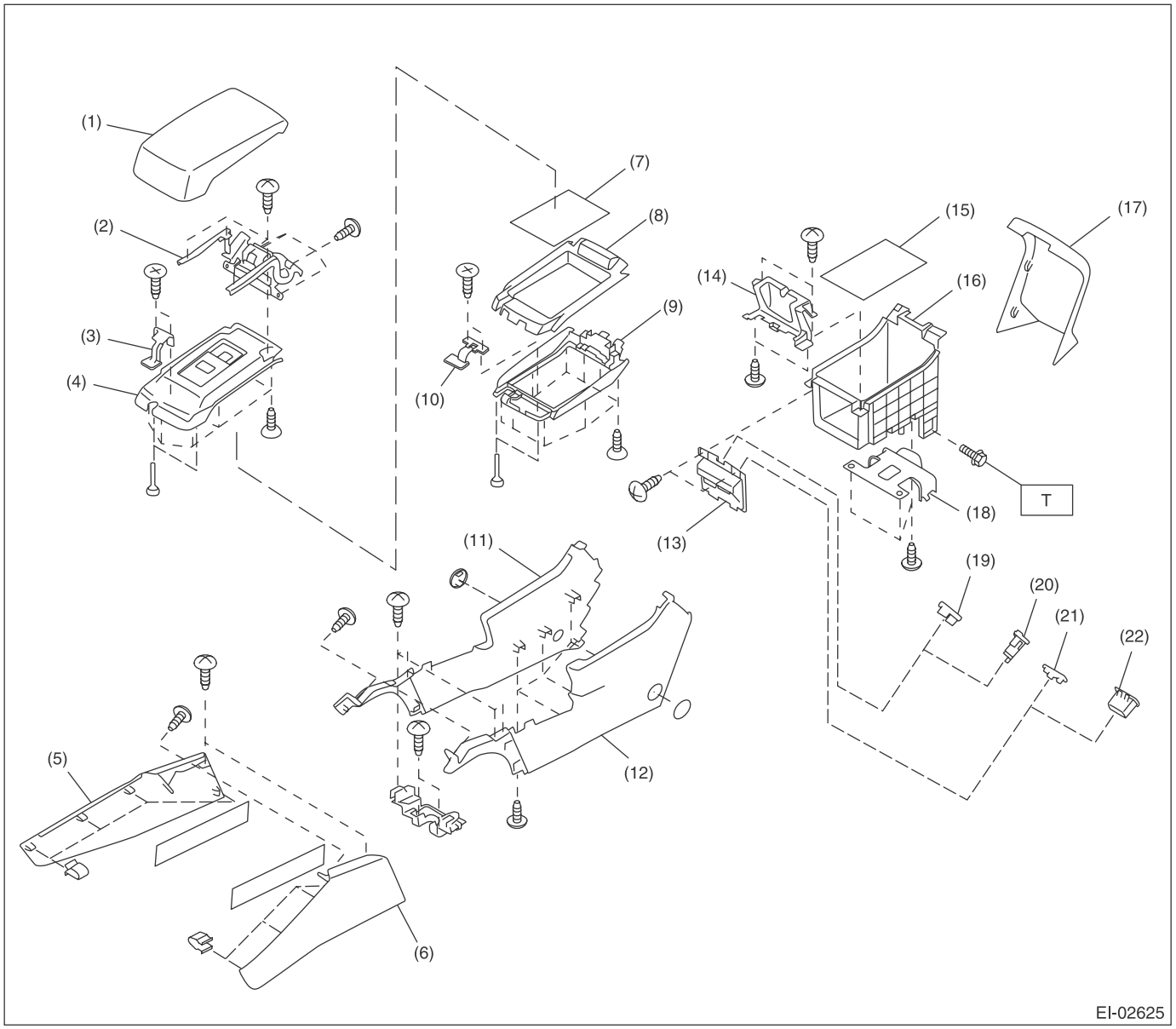

(1)	Console lid COMPL	(10)	Lid lock LWR	(19)	Cover A
(2)	Console lid hinge COMPL	(11)	Console box LWR RH	(20)	Accessory socket
(3)	Lid lock UPR	(12)	Console box LWR LH	(21)	Cover B
(4)	Lid inner UPR	(13)	Pocket case	(22)	AUX unit
(5)	Console front side cover ASSY RH	(14)	Cover center		
(6)	Console front side cover ASSY LH	(15)	Mat (pocket)		
(7)	Mat (lid LWR)	(16)	Console pocket		
(8)	Lid inner LWR	(17)	Console rear cover		
(9)	Lid outer LWR	(18)	Console bracket		

Tightening torque:N·m (kgf-m, ft-lb)	
T:	*6.5 (0.66, 4.8)*

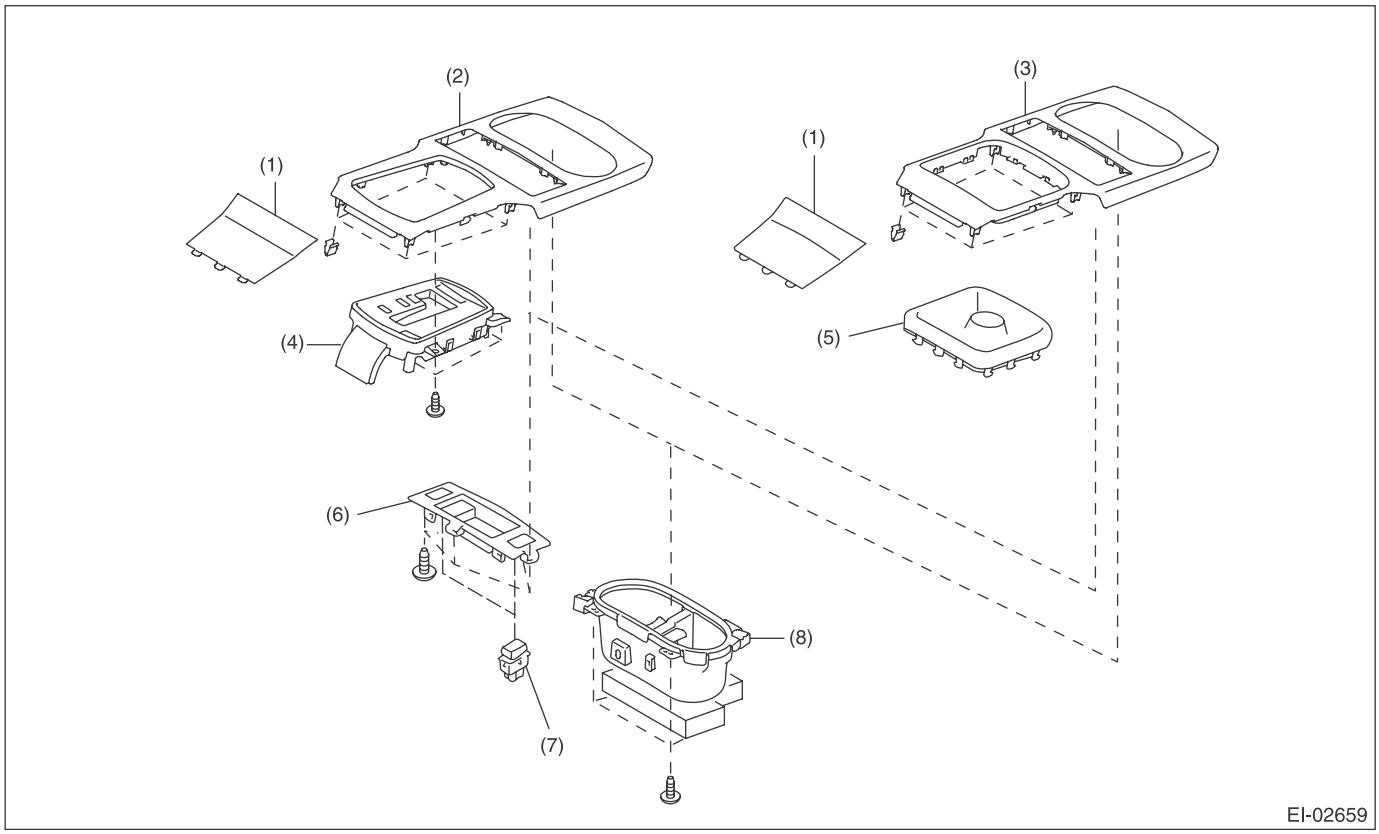

(1) Center pocket mat
(2) Front cover AT
(3) Front cover MT
(4) Indicator ASSY AT
(5) Shift boot (MT model)
(6) Switch case
(7) Seat heater switch
(8) Cup holder ASSY

16.INSTRUMENT PANEL

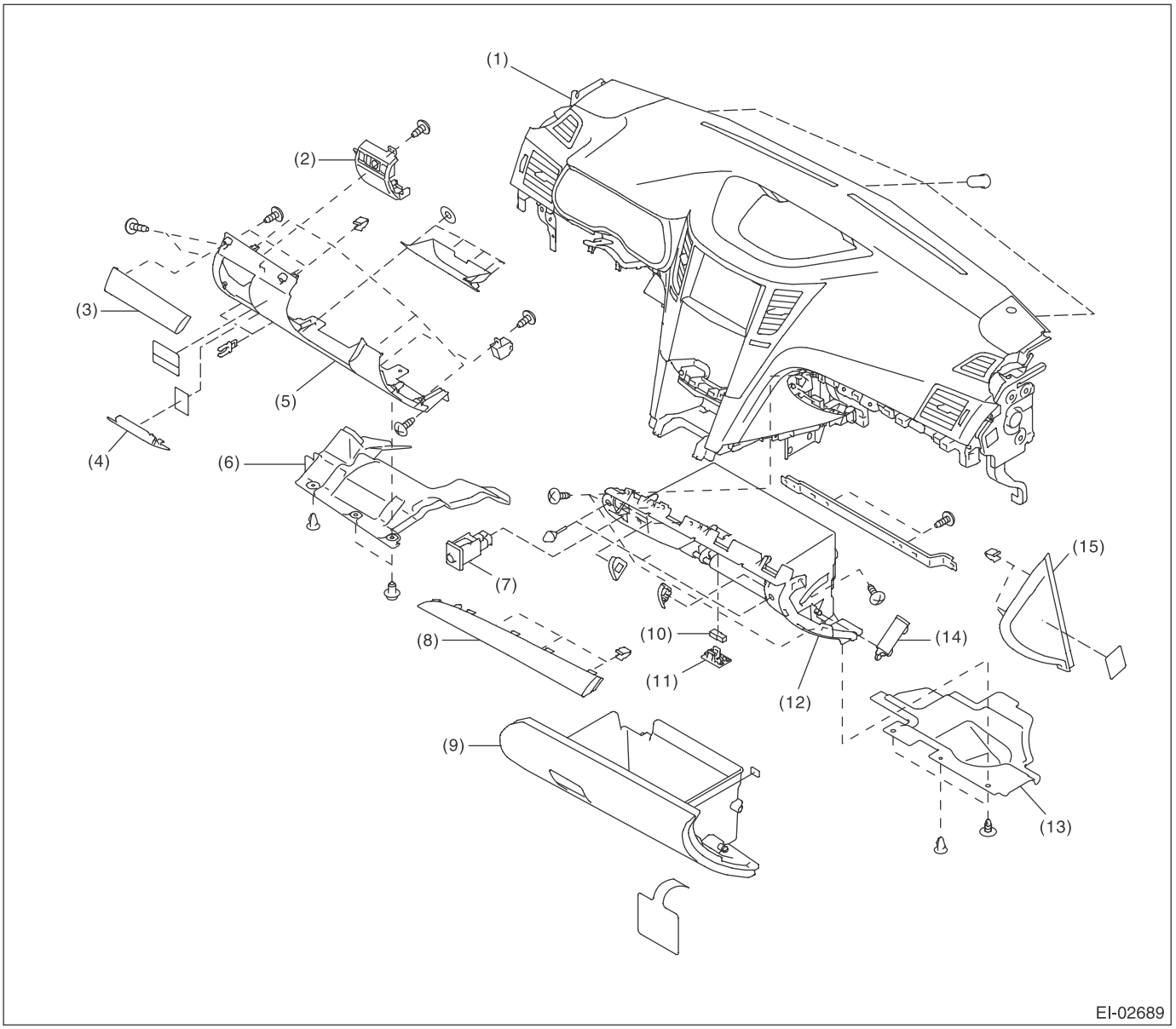

(1)	Instrument panel ASSY	(6)	Instrument panel lower cover under	(11)	Illumination bracket
(2)	Switch panel ASSY	(7)	Trunk opener cancel button	(12)	Glove box back panel
(3)	Ornament panel ASSY D OUT	(8)	Ornament panel ASSY P	(13)	Glove box under cover
(4)	Fuse lid	(9)	Glove box lid ASSY	(14)	Glove box damper
(5)	Instrument panel lower cover	(10)	Illumination LED ASSY	(15)	Instrument panel side cover

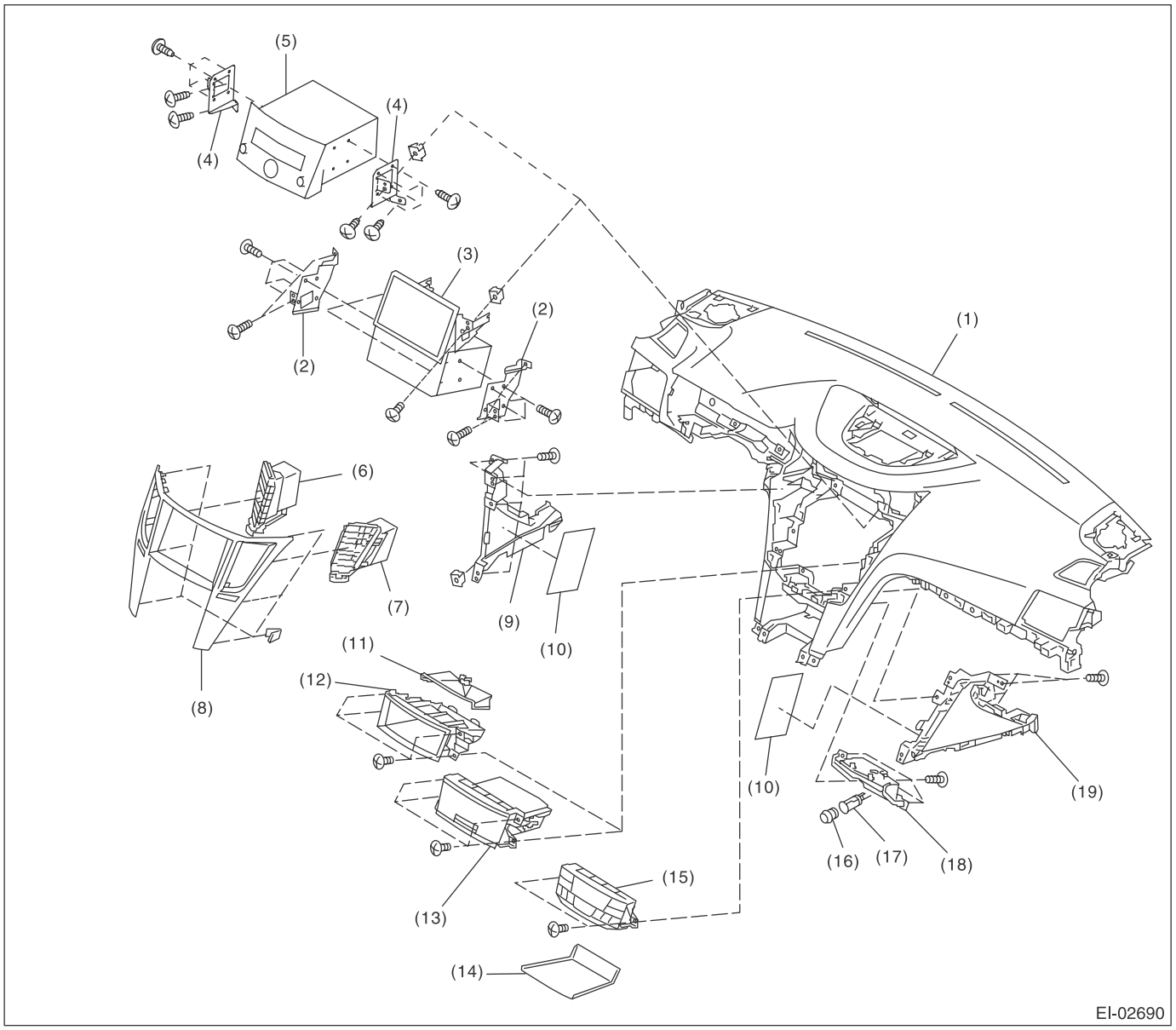

(1)	Instrument panel pad and frame ASSY	(8)	Center panel ASSY	(15)	Control panel ASSY
(2)	Navigation bracket	(9)	Center cover side RH	(16)	Plug
(3)	Navigation ASSY	(10)	Insulator	(17)	Accessory socket ASSY
(4)	Audio bracket	(11)	Pocket center light	(18)	Center pocket back panel
(5)	Audio ASSY	(12)	Pocket ASSY (without lid)	(19)	Center cover side LH
(6)	Center grille ASSY LH	(13)	Pocket ASSY (with lid)		
(7)	Center grille ASSY RH	(14)	Center pocket mat		

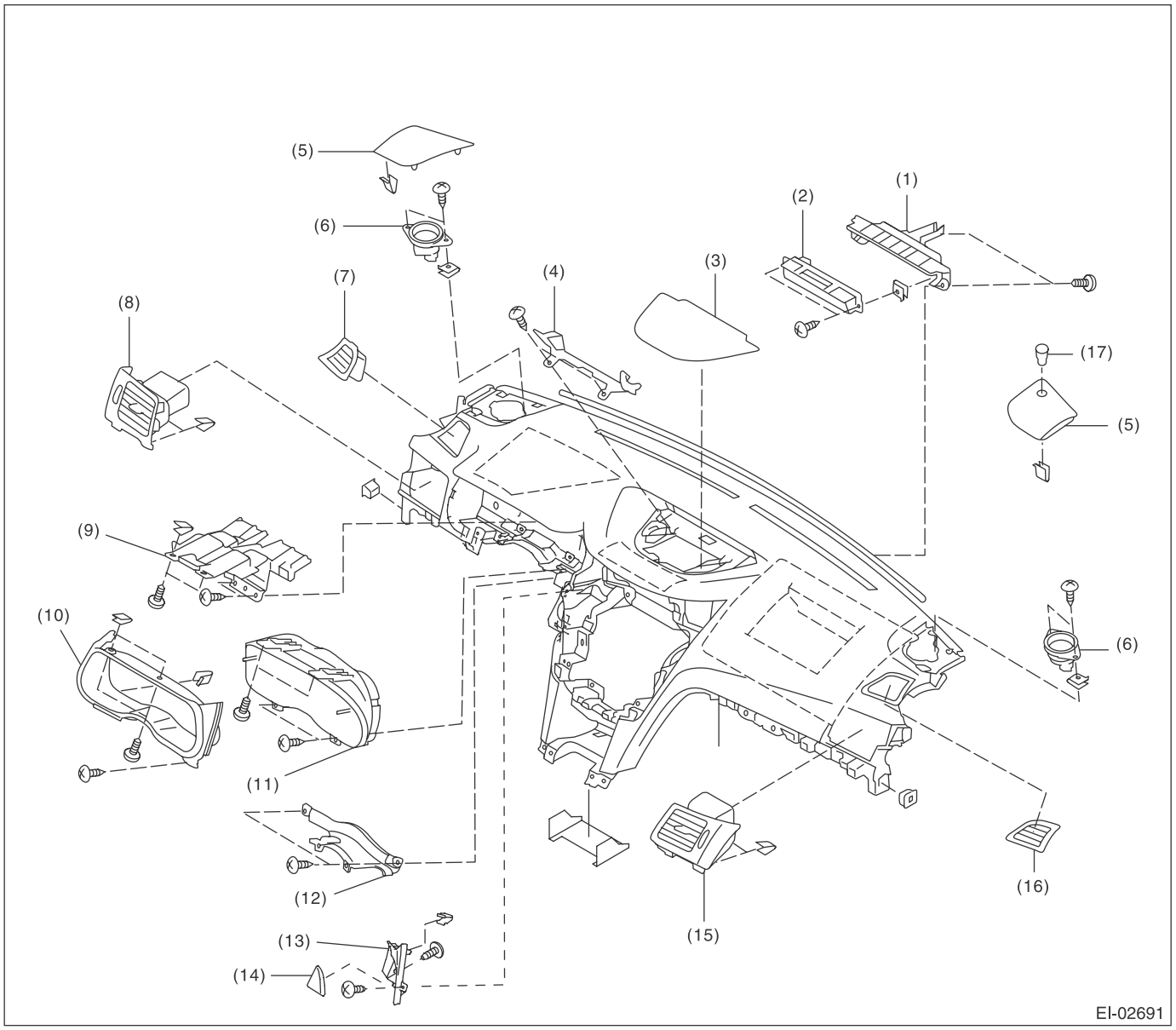

(1) Multi display panel UPR
(2) Multi display ASSY
(3) Center speaker cover
(4) Multi display panel LWR
(5) Side speaker cover
(6) Front side speaker ASSY
(7) Defroster side grille RH
(8) Side vent grille ASSY RH
(9) Meter reinforcement panel
(10) Meter visor ASSY
(11) Combination meter ASSY
(12) Steering upper cover
(13) Starter switch cover
(14) Ornament panel ASSY D INN
(15) Side vent grille ASSY LH
(16) Defroster side grille LH
(17) Sunload sensor

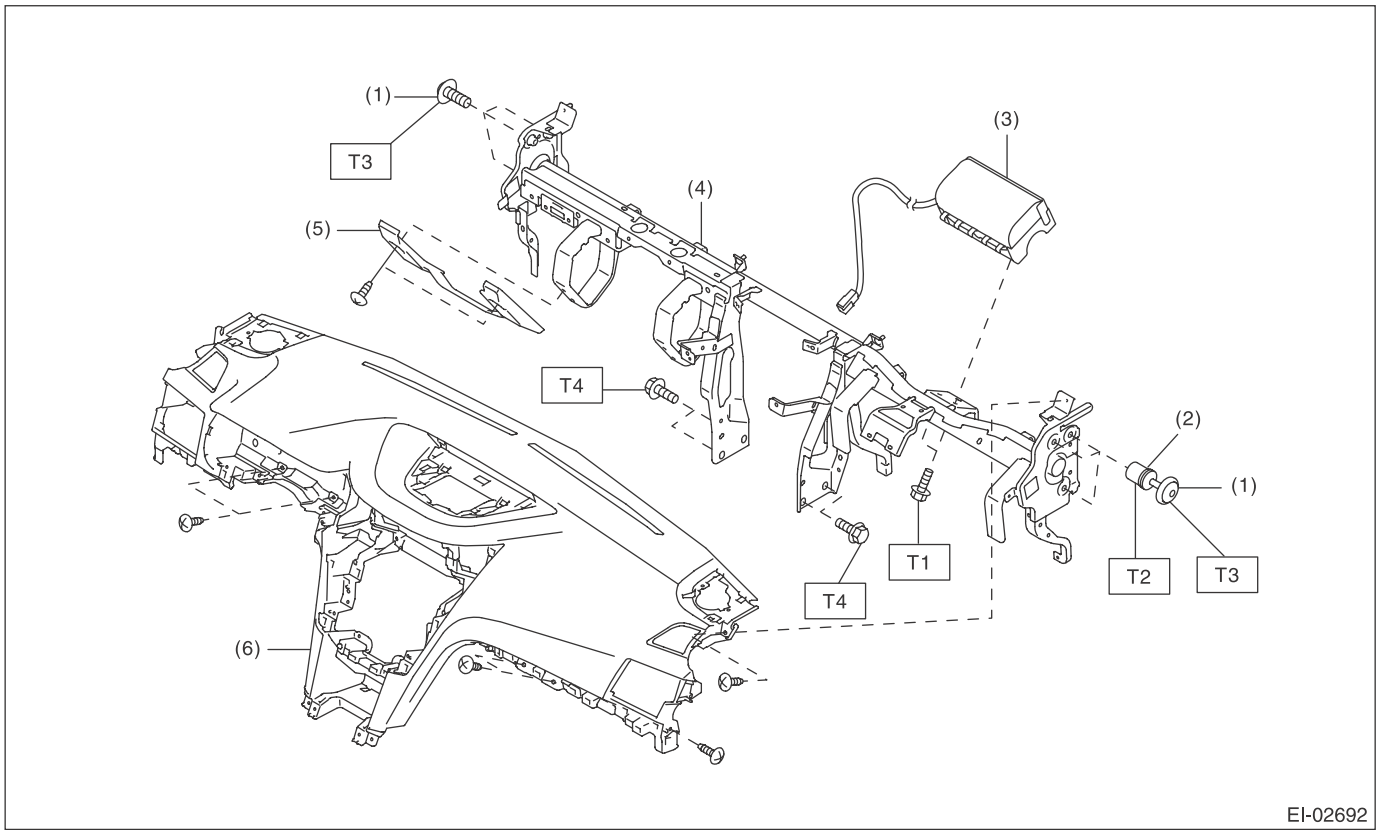

(1)	TORX® bolt	(4)	Steering support beam ASSY
(2)	Adjuster bolt	(5)	Knee guard panel COMPL
(3)	Passenger's airbag module ASSY	(6)	Instrument panel pad and frame ASSY

Tightening torque:N·m (kgf-m, ft-lb)
T1: 7.5 (0.76, 5.5)
T2: 3 (0.31, 2.2)
T3: 18 (1.84, 13.3)
T4: 25 (2.55, 18.4)

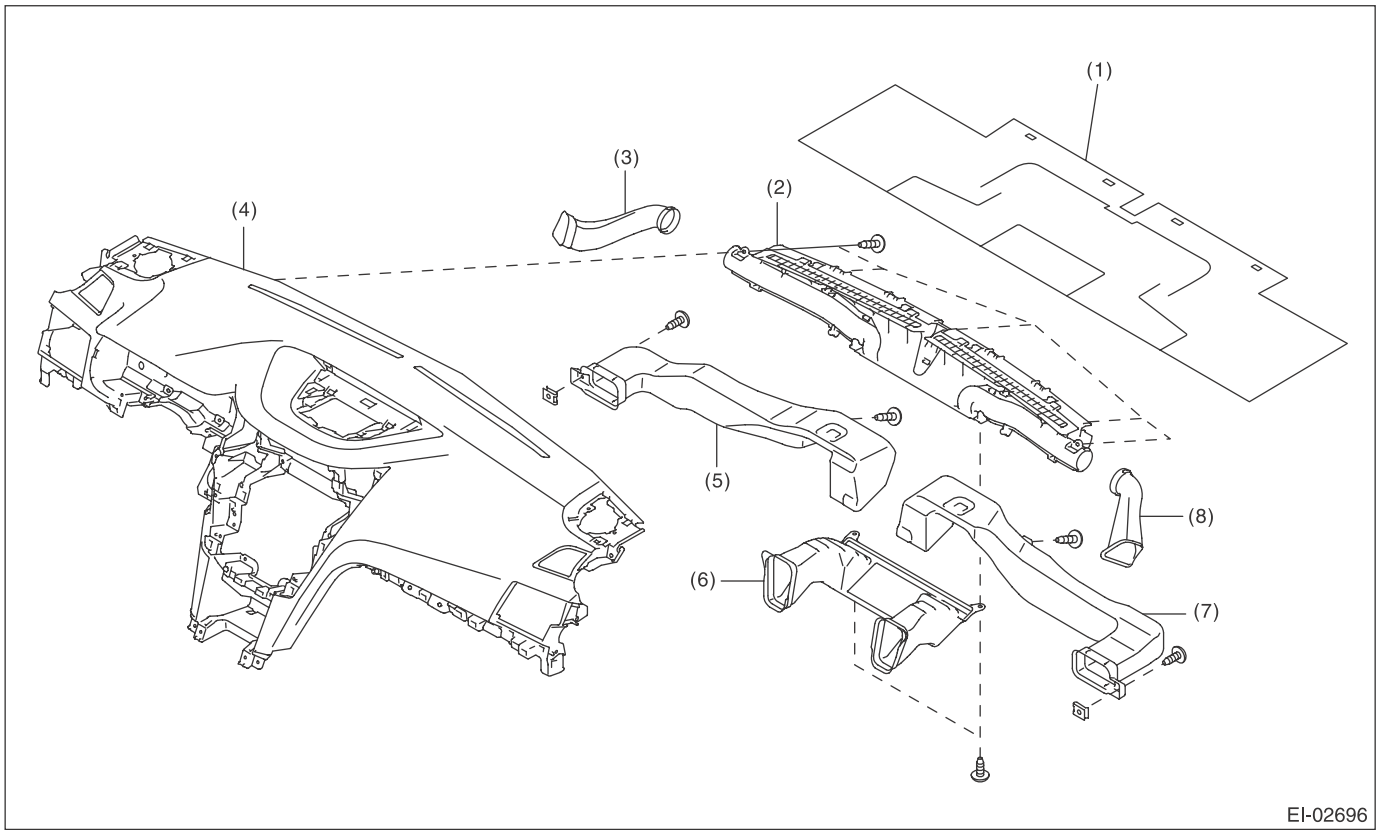

(1) Insulator
(2) Front defroster nozzle ASSY
(3) Side defroster duct RH
(4) Instrument panel pad and frame ASSY
(5) Side vent duct LH
(6) Center vent duct
(7) Side vent duct RH
(8) Side defroster duct LH

17.INNER TRIM

- Sedan model

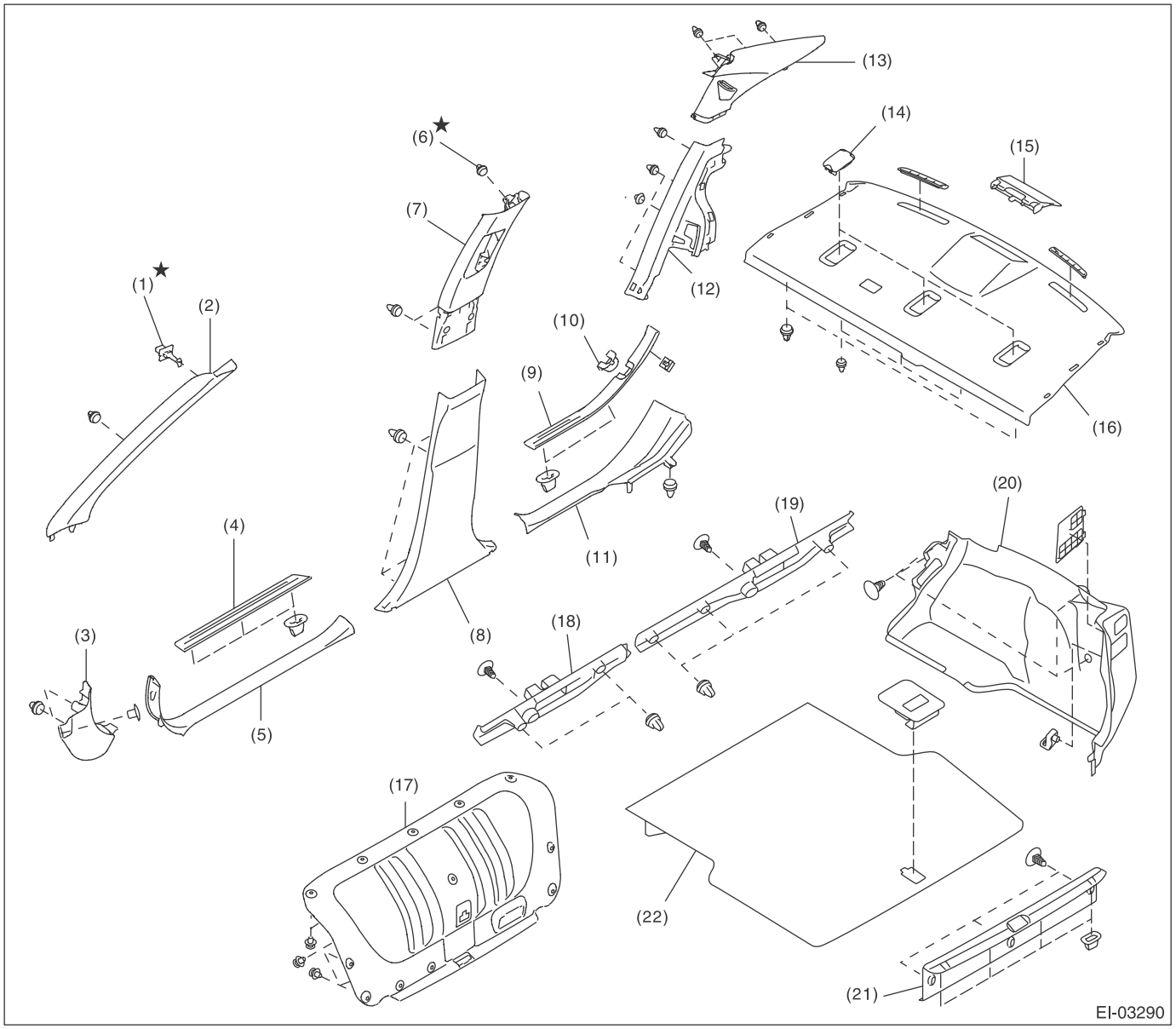

(1) Tether clip
(2) Front pillar trim
(3) Side sill cover front
(4) Side sill cover - front OUT
(5) Side sill cover - front INN
(6) Clip
(7) Center pillar trim UPR
(8) Center pillar trim LWR
(9) Side sill cover - rear OUT
(10) Catcher cover
(11) Side sill cover - rear INN
(12) Rear quarter trim LWR
(13) Rear quarter trim UPR
(14) Child anchor cap
(15) High-mounted stop light ASSY
(16) Rear shelf panel
(17) Trunk lid trim
(18) Trunk trim panel ASSY - front LH
(19) Trunk trim panel ASSY - front RH
(20) Trunk trim panel ASSY - side
(21) Trunk trim panel ASSY - rear
(22) Trunk mat

- OUTBACK model

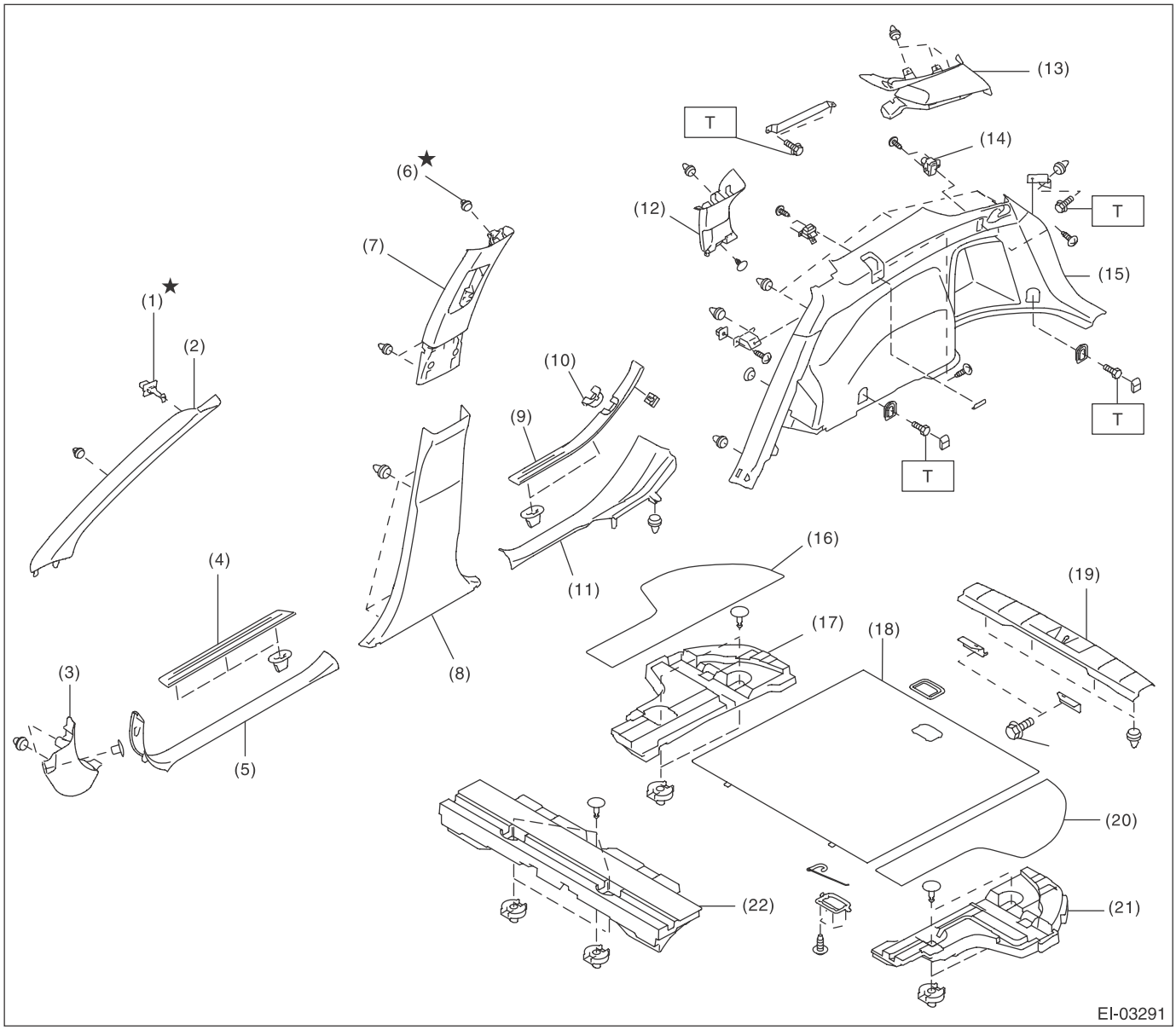

(1) Tether clip
(2) Front pillar trim
(3) Side sill cover front
(4) Side sill cover - front OUT
(5) Side sill cover - front INN
(6) Clip
(7) Center pillar trim UPR
(8) Center pillar trim LWR
(9) Side sill cover - rear OUT
(10) Catcher cover
(11) Side sill cover - rear INN
(12) Rear quarter trim UPR - front
(13) Rear quarter trim UPR - rear
(14) Hook
(15) Rear quarter trim LWR
(16) Rear floor mat RH
(17) Rear floor spacer RH
(18) Rear floor mat CTR
(19) Rear floor edge cover
(20) Rear floor mat LH
(21) Rear floor spacer LH
(22) Rear floor spacer CTR - front

Tightening torque: N·m (kgf-m, ft-lb)
T: 7.5 (0.76, 5.5)

18.REAR GATE TRIM

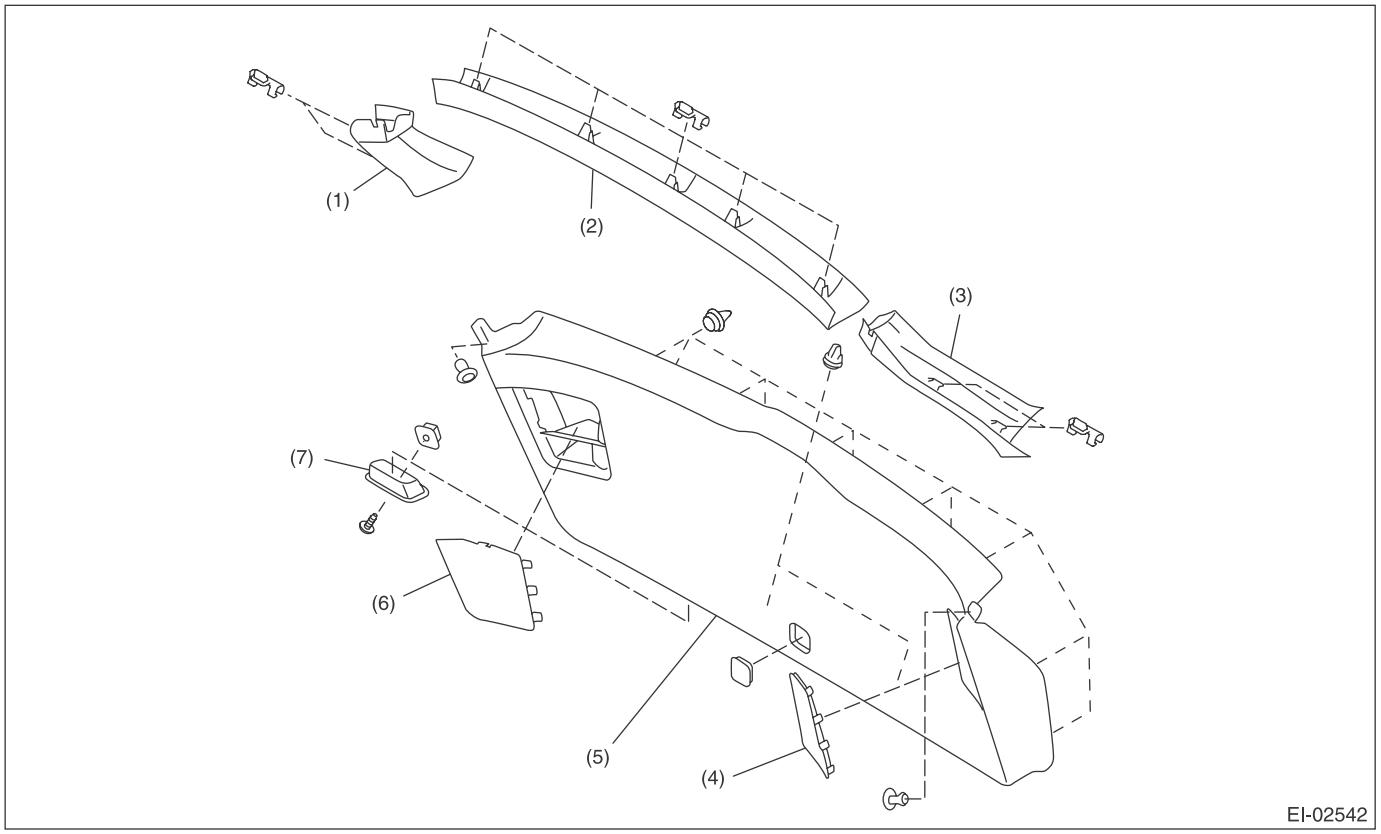

(1) Rear gate pillar trim RH
(2) Rear gate upper trim
(3) Rear gate pillar trim LH
(4) Rear gate lower cap LH
(5) Rear gate lower trim
(6) Rear gate lower cap RH
(7) Rear gate handle

19.ROOF TRIM

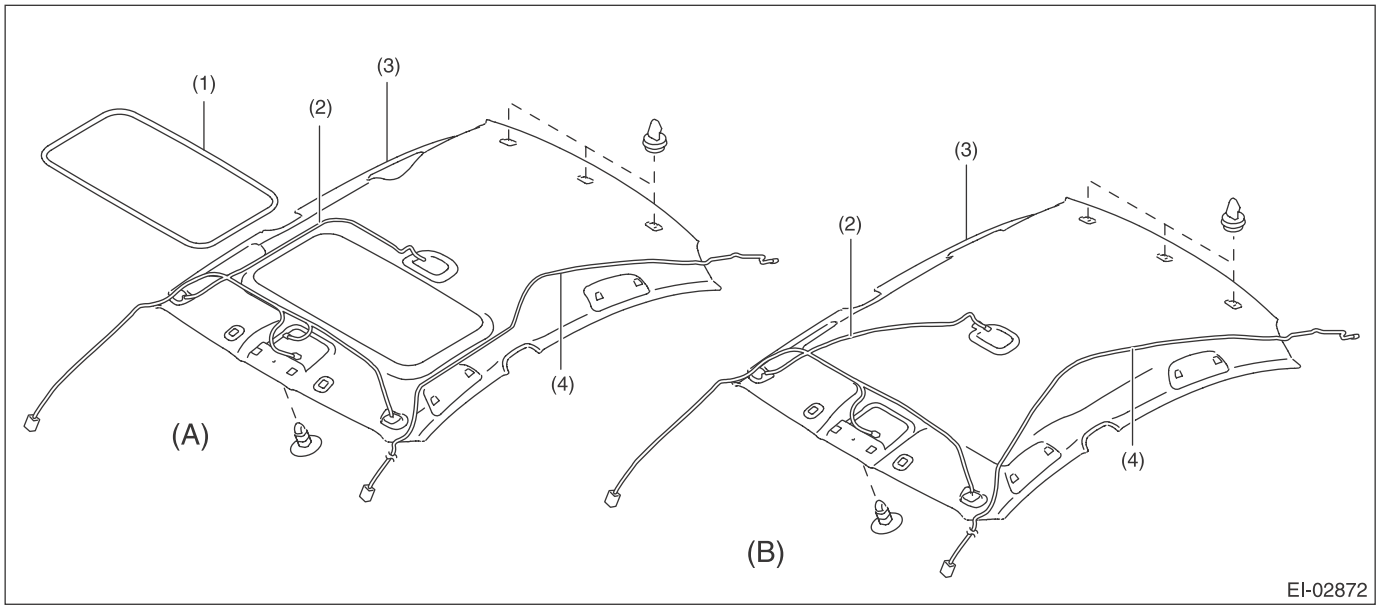

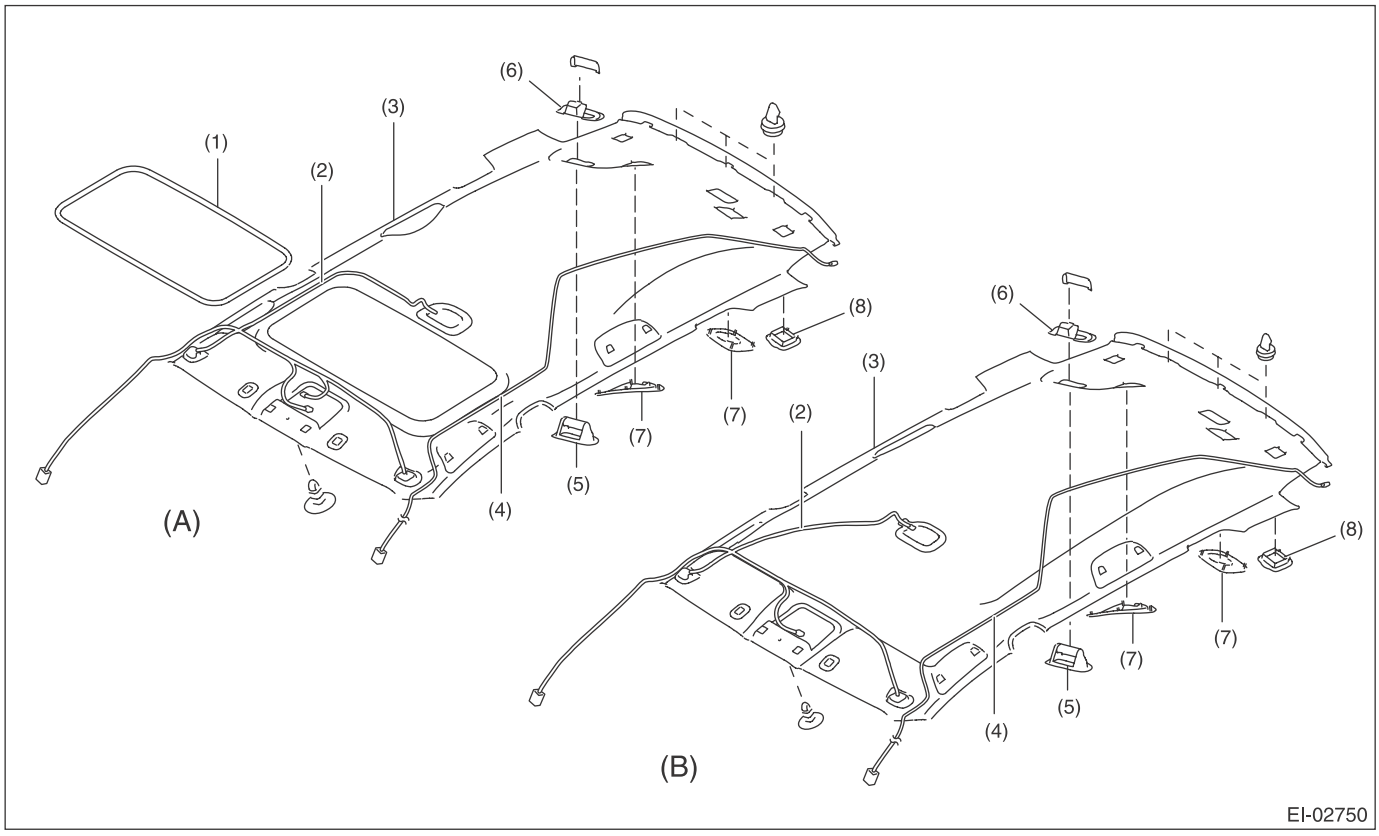

(A) Model with sunroof
(B) Normal roof model

(1) Sun roof garnish
(2) Roof cord ASSY
(3) Roof trim
(4) Feeder cord ASSY
(5) Seat belt holder cover
(6) Seat belt holder base
(7) Speaker cover
(8) Child anchor cover

20.ROOM INNER PARTS

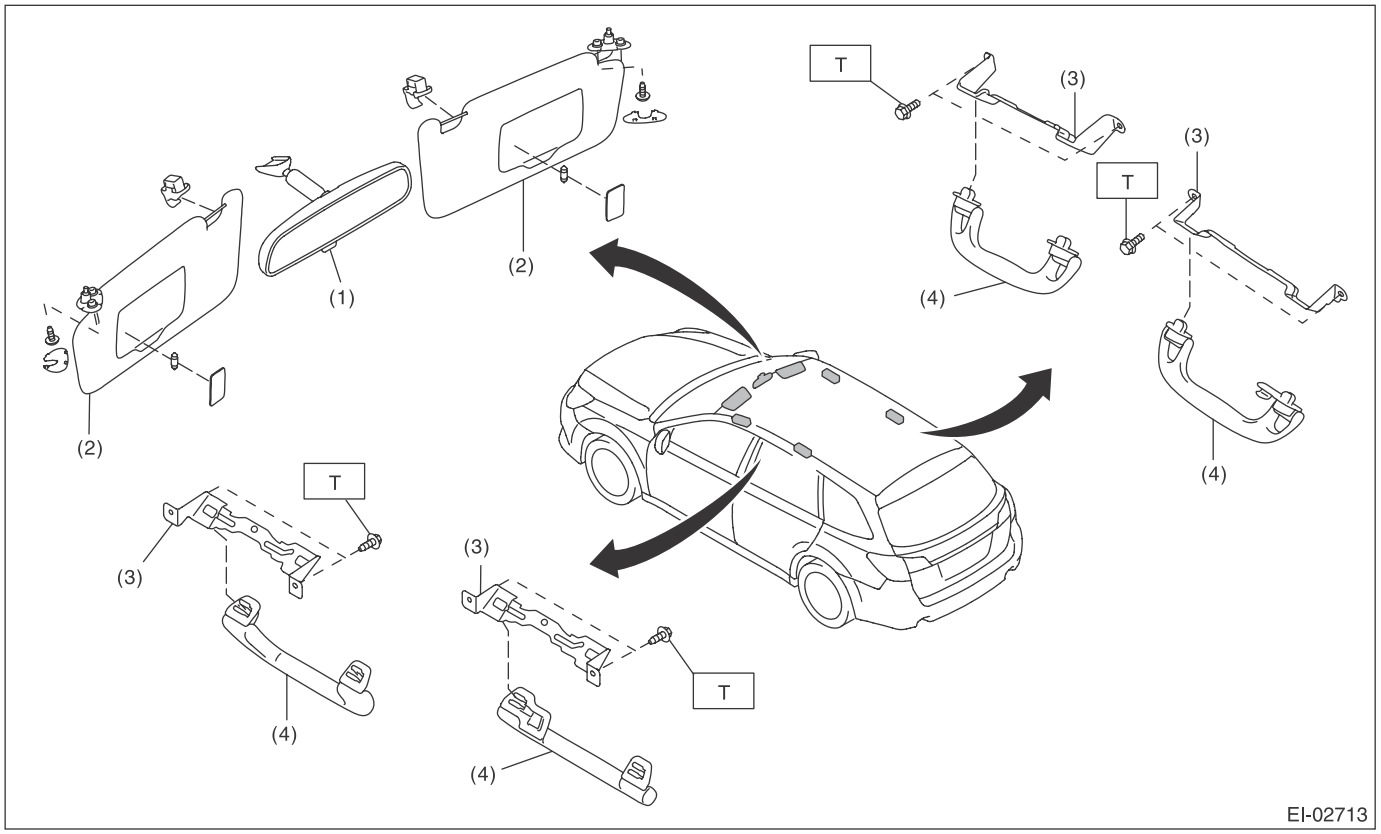

(1)	Room mirror	(3)	Assist grip bracket
(2)	Sun visor	(4)	Assist grip

Tightening torque:N·m (kgf-m, ft-lb)
T: 7.5 (0.76, 5.5)

21.HEAT SHIELD COVER

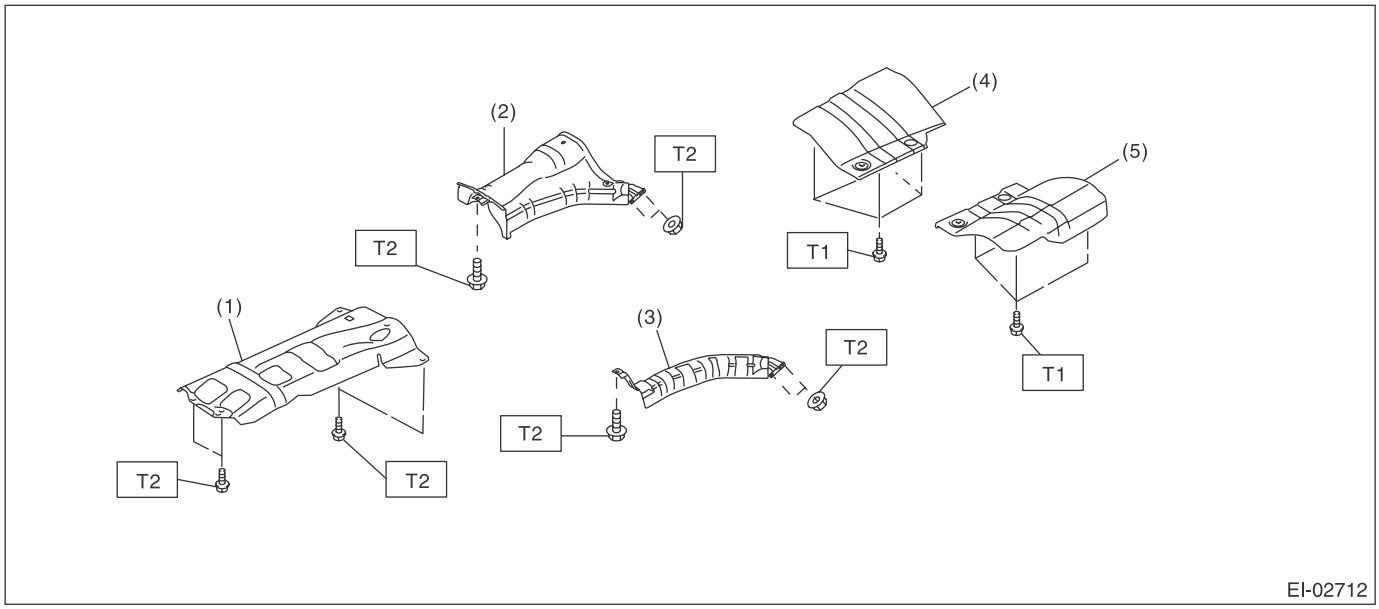

(1)	Front heat shield cover	(3)	Rear heat shield cover RH (only DOHC model)	***Tightening torque:N·m (kgf-m, ft-lb)***
(2)	Center heat shield cover (DOHC model)	(5)	Rear heat shield cover LH	***T1: 10 (1.02, 7.4)***
(3)	Center heat shield cover (SOHC model)			***T2: 18 (1.84, 13.3)***

B: PREPARATION TOOL

TOOL NAME	REMARKS
Clip remover	Used for removing trim. • KTC AP201-10A • KTC AP201-N • KTC AP203-10A • KTC AP20L-10B or equivalent
Clip clamp pliers	Used for removal of various clips and clamps. • KTC CCP-190 or equivalent

2. Front Grille

A: REMOVAL

1) Remove the front bumper face assembly.
   (1) Remove the clips, turn over the front mud guard, and disconnect the fog light connector. (Model with fog light)

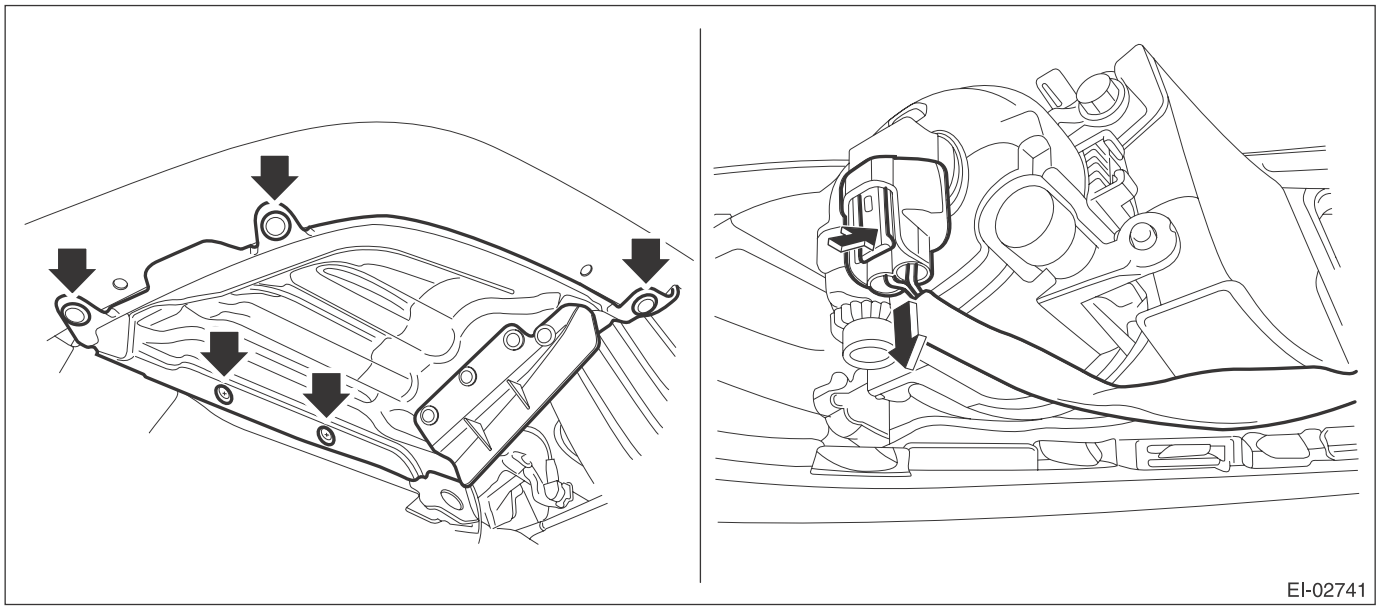

   (2) Remove the clips at the upper side of the bumper.
   (3) Remove the clips from the fender.

(4) Remove the clips at the lower side of bumper.

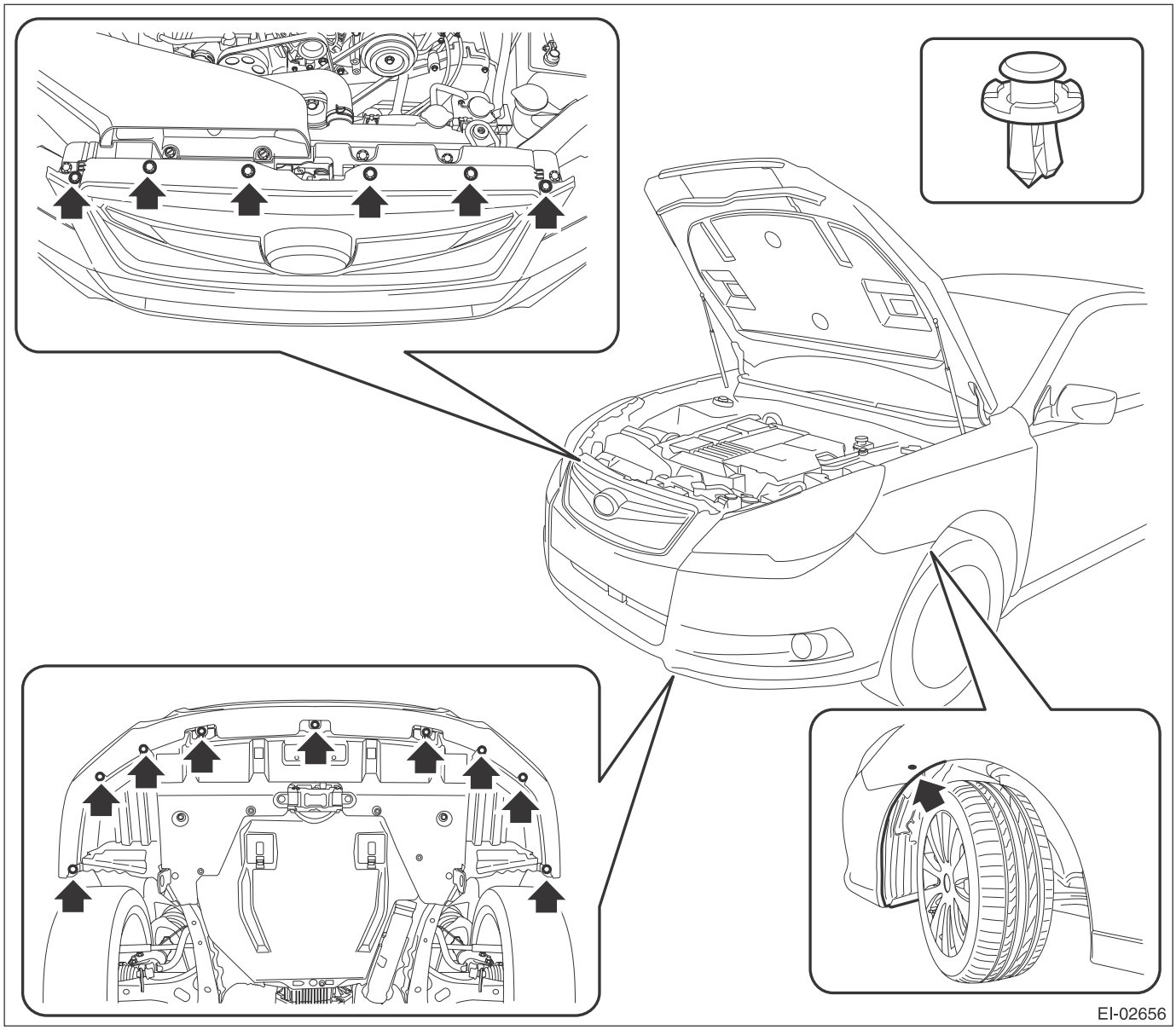

(5) Detach the flange section on the bumper face side from the bracket side front UPR.

CAUTION:
Do not pull forcibly. Doing so may damage the flange sections on the bumper face side.

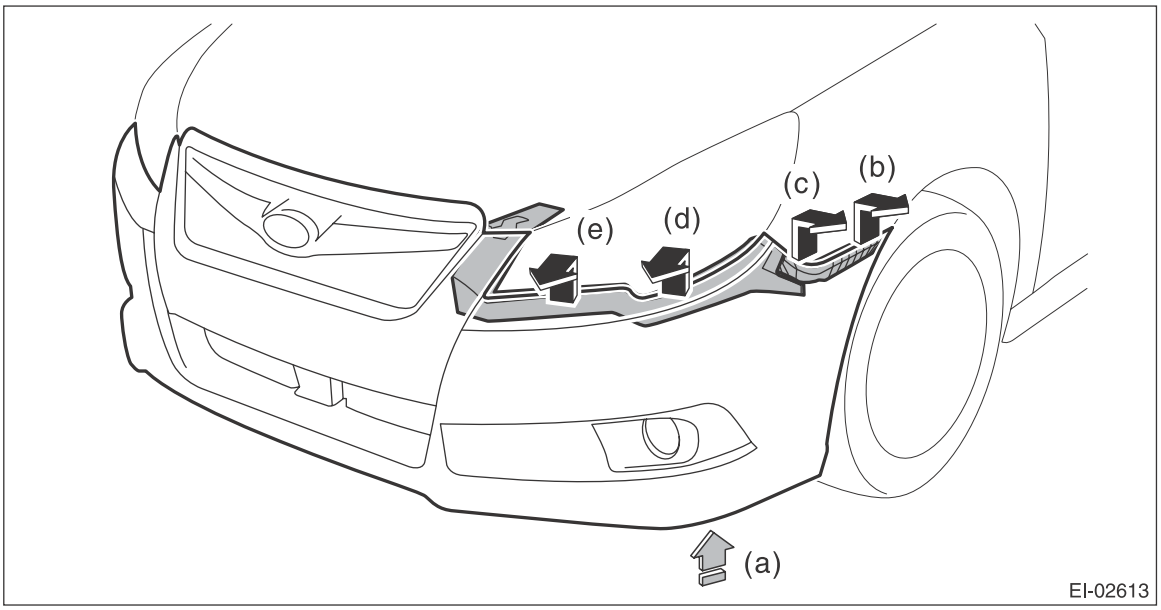

NOTE:
Detach the parts in order from (b) to (e) while pulling up the lower side of the fog light (a).
Detach the opposite side in the same manner.

2) Remove the front grille assembly.
(1) Remove the screws from the back side of bumper face.
(2) Release the claws, and remove the front grille assembly.

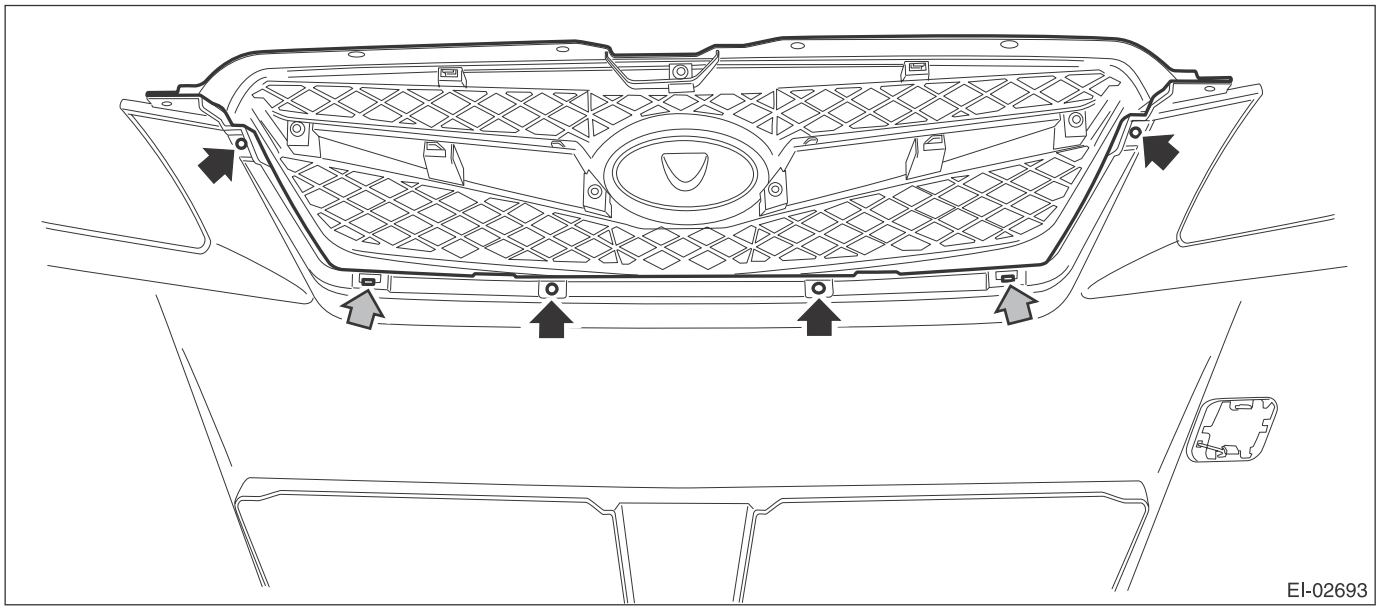

B: INSTALLATION

Install each part in the reverse order of removal.

CAUTION:
Install the bumper face so that the under cover front end (b) comes inside the front bumper face (a).

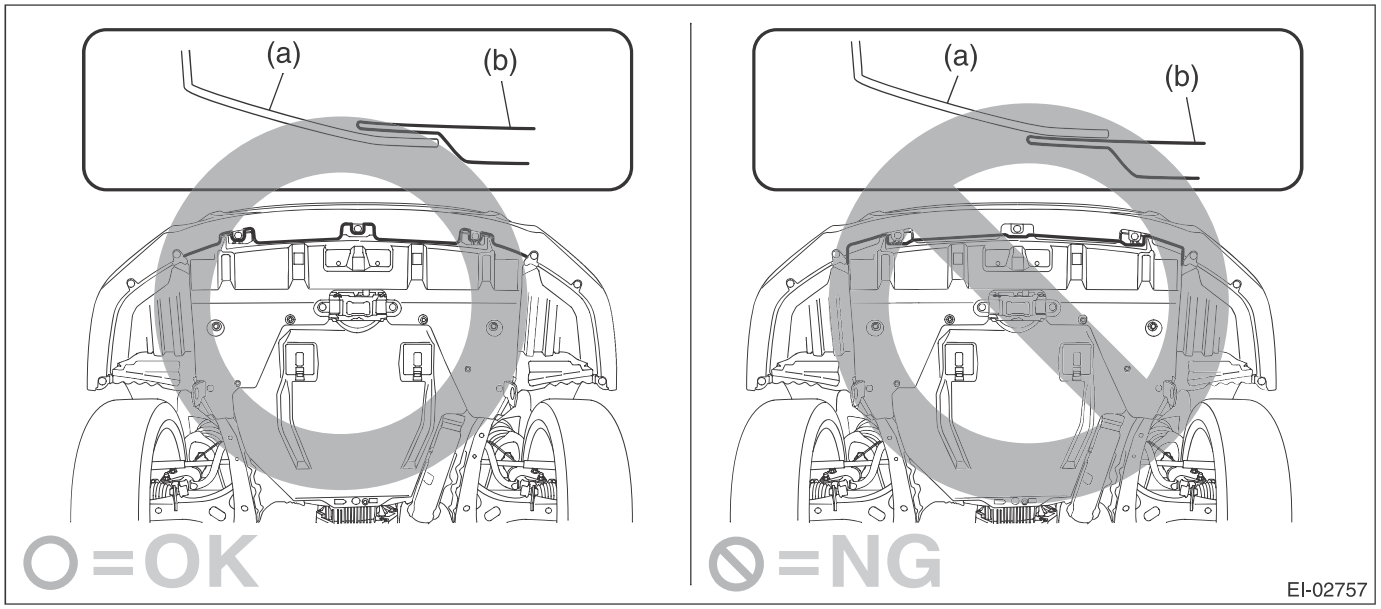

3. Front Hood Grille

A: REMOVAL

1) Open the front hood.
2) Remove the hood duct assembly.
   (1) Remove the screws.
   (2) Remove the clips and remove the hood duct assembly.

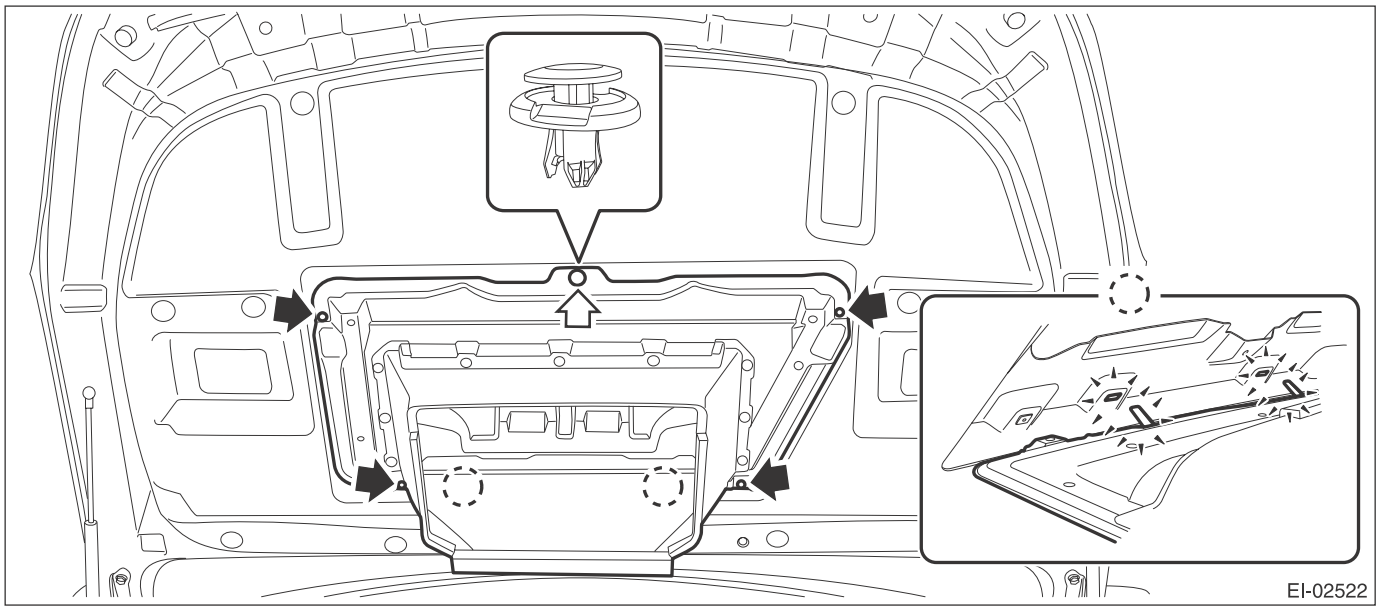

3) Release the clips to remove the front hood insulator.

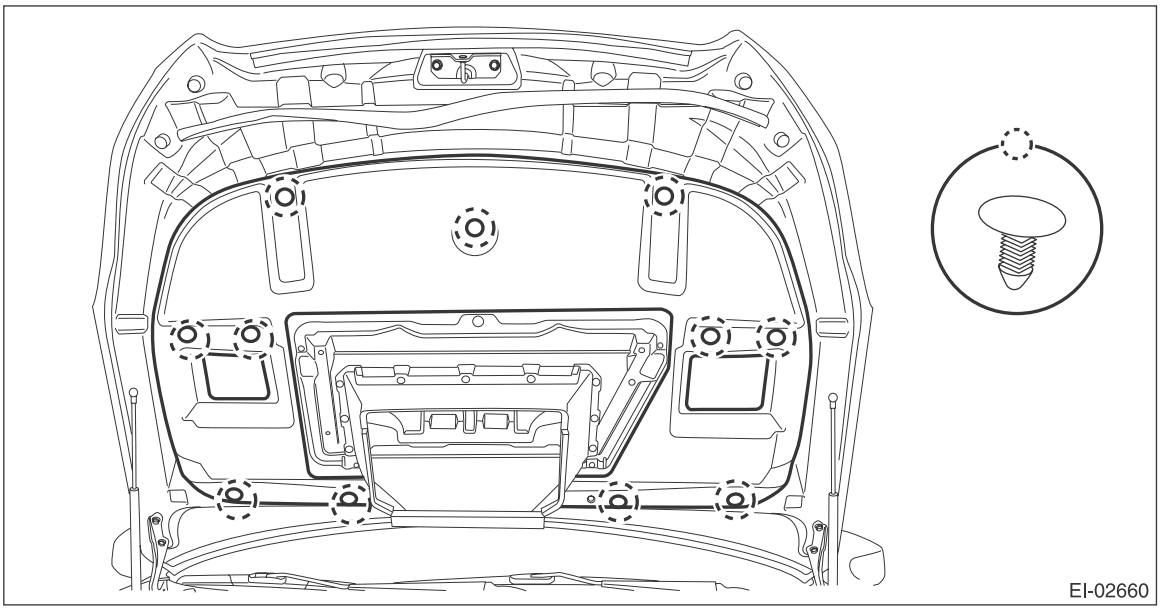

4) Remove the front hood grille.
   (1) Remove the nuts (A).

(2) Remove clip (B), and remove the front hood grille.

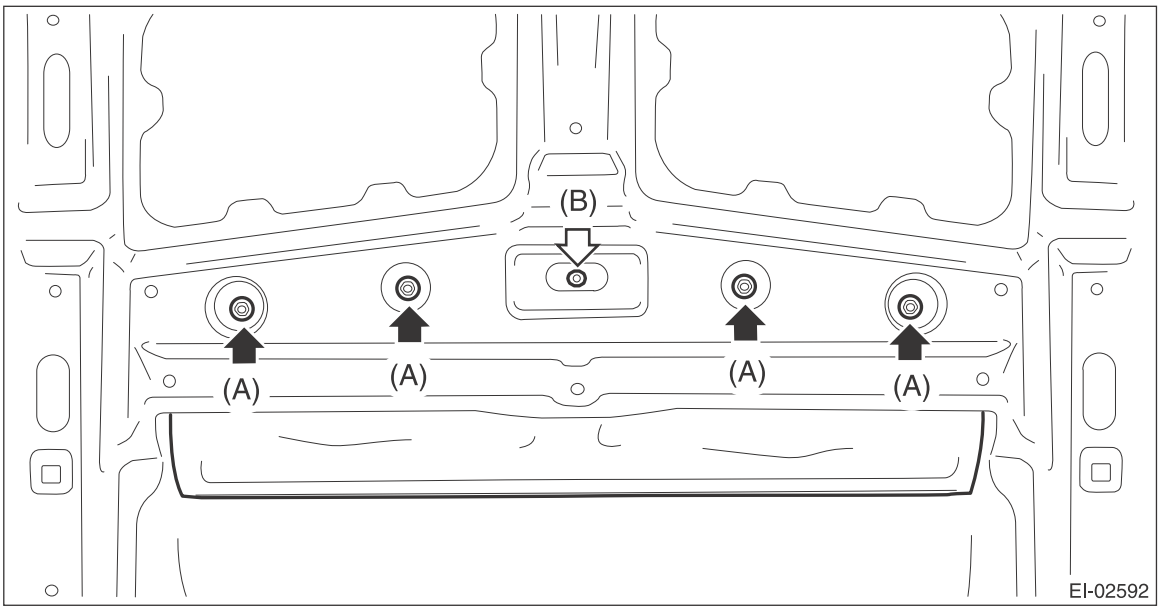

B: INSTALLATION

Install each part in the reverse order of removal.

Tightening torque:<Ref. to EI-4, FRONT HOOD GRILLE, COMPONENT, General Description.>

NOTE:
Make sure that the front hood duct claws are inserted in the holes on the front hood.

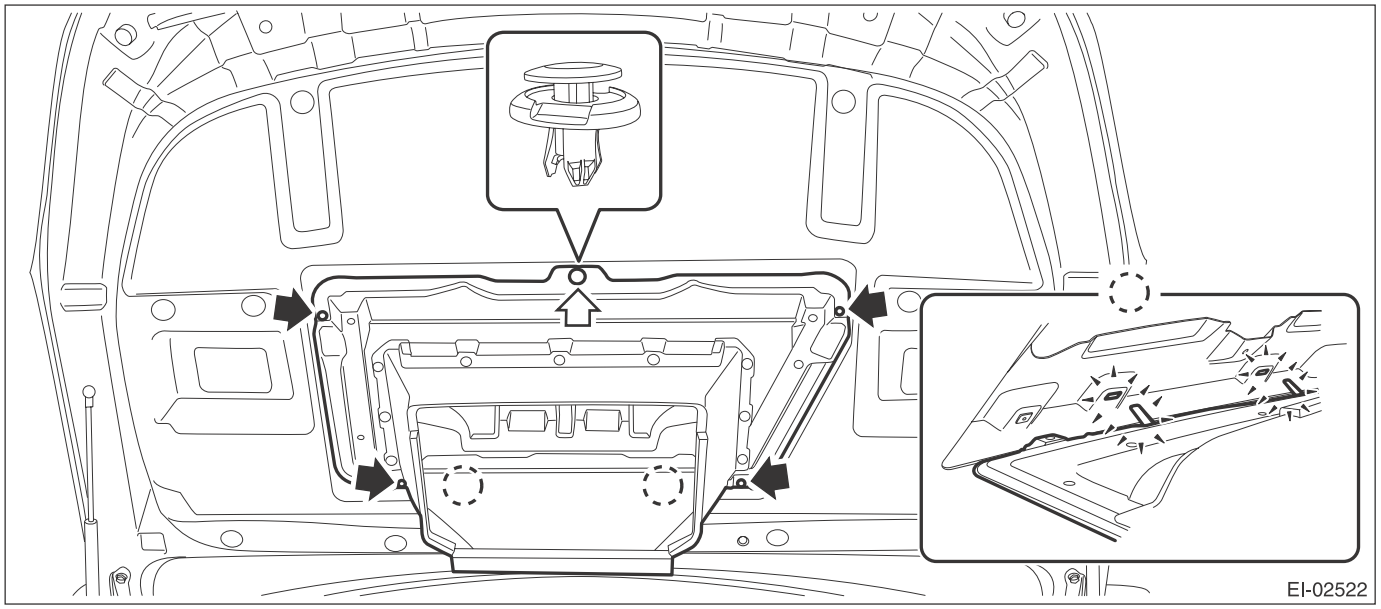

4. Cowl Panel

A: REMOVAL

1) Open the front hood.
2) Remove the front wiper arm assembly.

CAUTION:
Follow the steps below when standing up the wiper arm. Not following the steps may cause contacting of wiper arms and damages of wiper arms.
1. Stand up the driver's side wiper arm.
2. Stand up the passenger's side wiper arm.
Fold the wiper arms in the reverse order.

(1) Remove the cap.
(2) Remove the nuts, and remove the front wiper arm assembly.

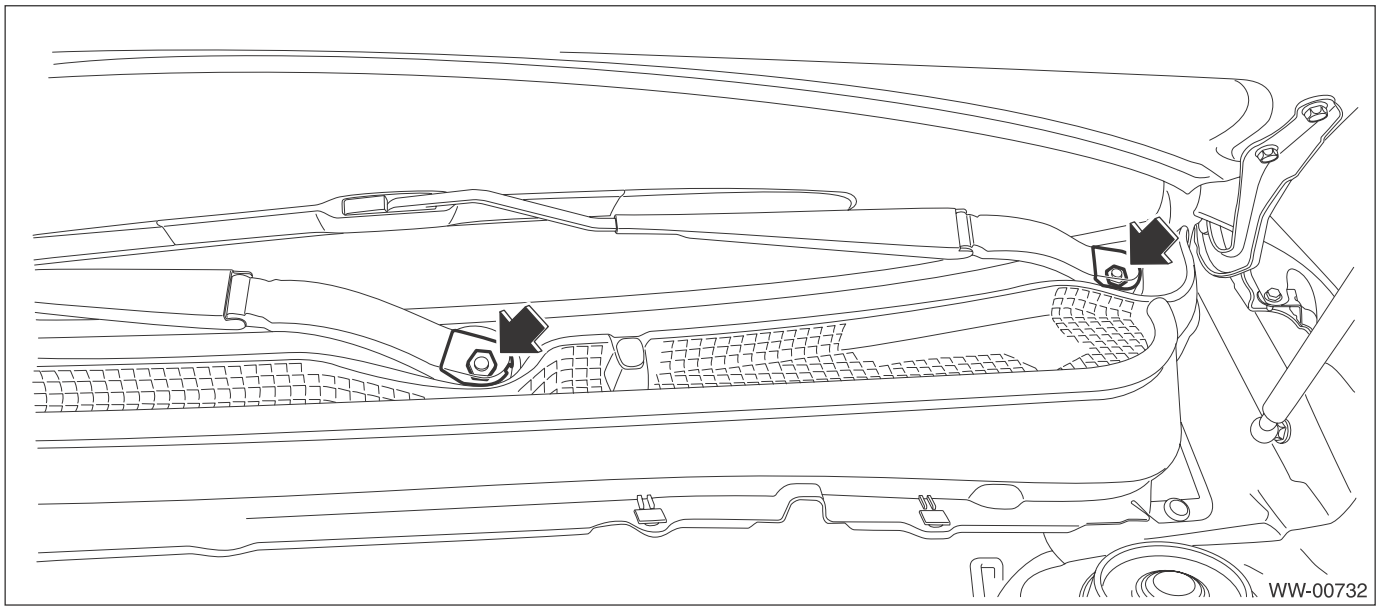

3) Remove the cowl panel side.
(1) Detach the pins of the cowl panel side.
(2) Remove the cowl panel side from inside the fender panel by pulling it.

CAUTION:
Applying excessive pulling force may damage the cowl panel side. If it is difficult to remove, use a plastic remover or equivalent tool.

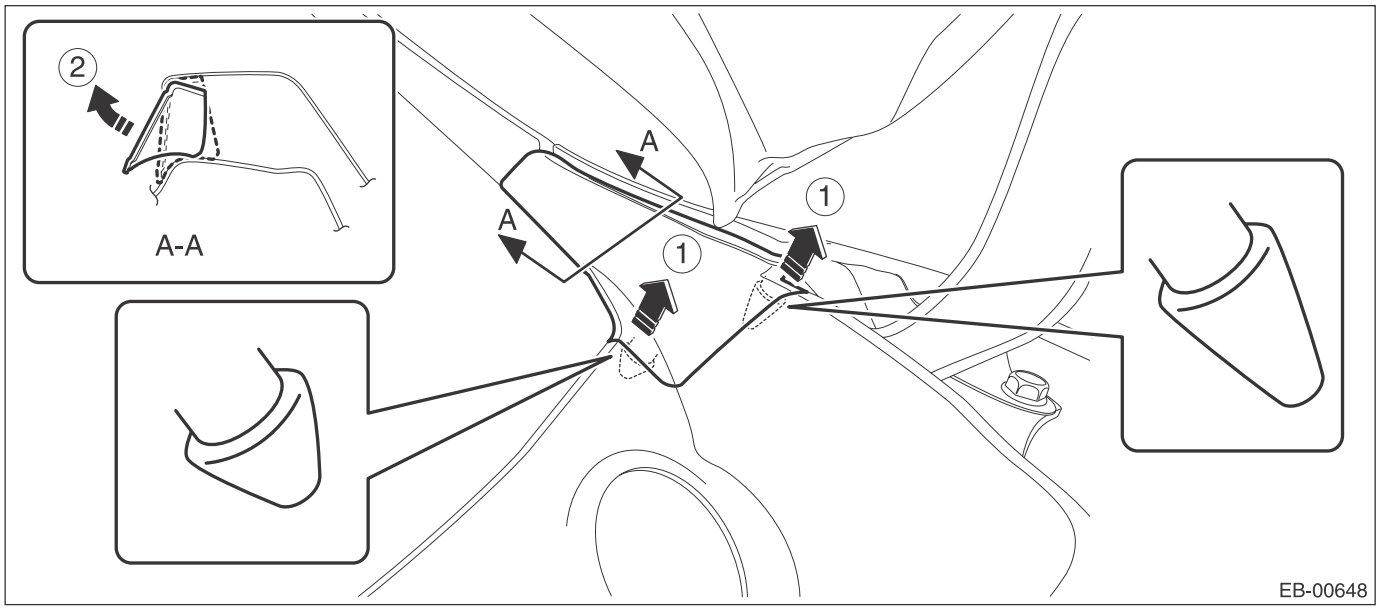

4) Remove the cowl panel.
(1) Release the clip (A).
(2) Push the claw of the clip (B) from both sides to remove it.

CAUTION:
When removing the clip (B), push the claw of the clip from both sides.
The clip may be damaged if forcibly pulled.

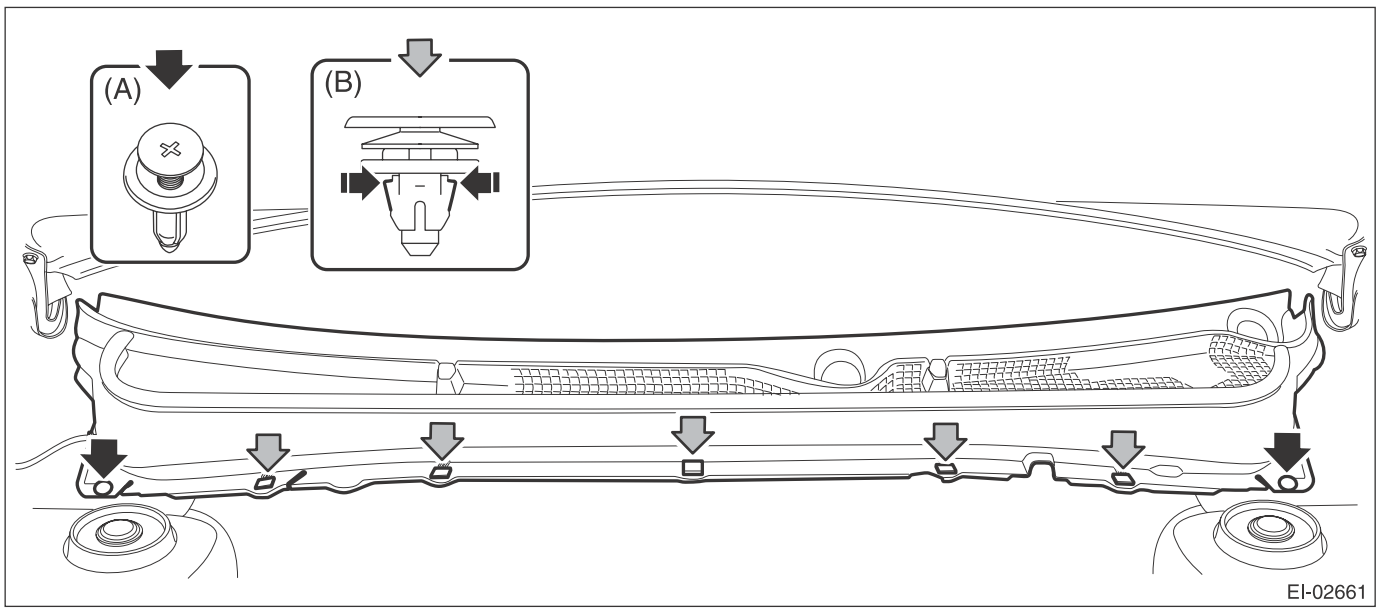

(3) Disconnect the washer hose.

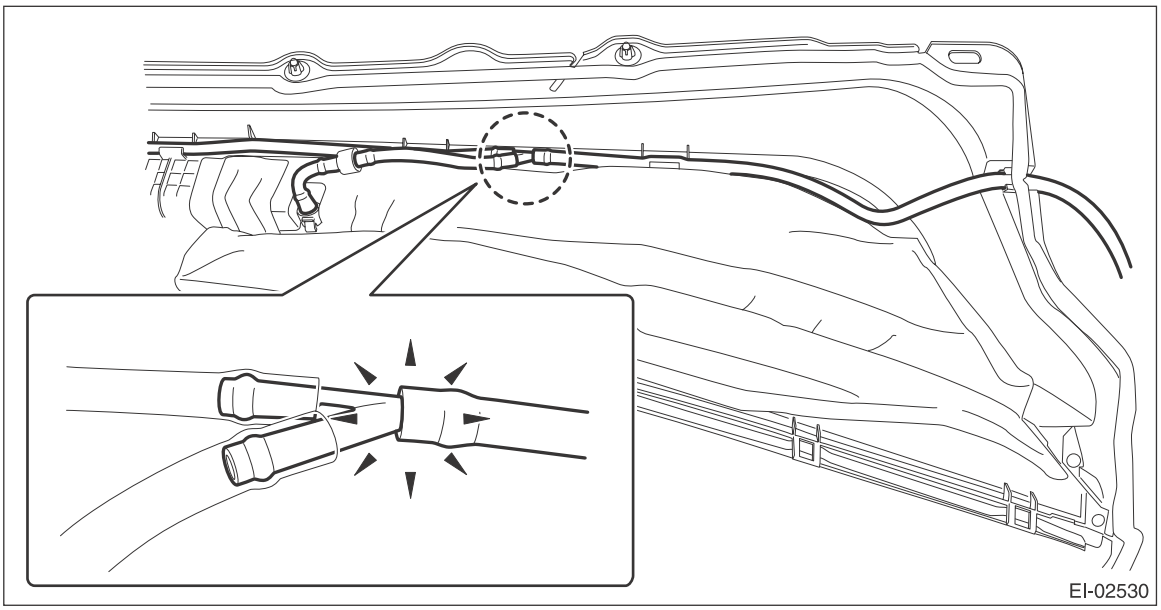

B: INSTALLATION

Install each part in the reverse order of removal.

NOTE:

- Attach the claws of cowl panel to the bottom end of windshield.

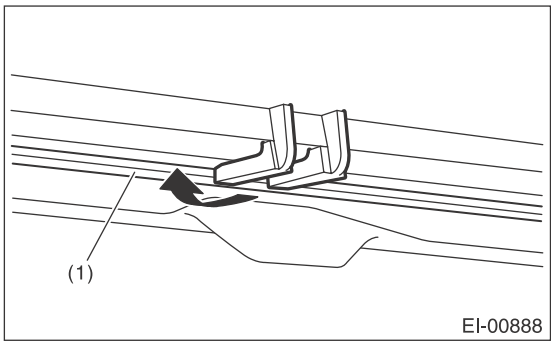

(1) Cross section of windshield

- If the washer nozzles have been removed from the cowl panel, adjust the washer spray positions. <Ref. to WW-35, ADJUSTMENT, Front Washer Nozzle.>

Tightening torque:

Front wiper arm:<Ref. to WW-3, FRONT WIPER, COMPONENT, General Description.>

5. Front Under Cover

A: REMOVAL

1) Lift up the vehicle.
2) Remove the bolts and clips, and remove the front under cover.

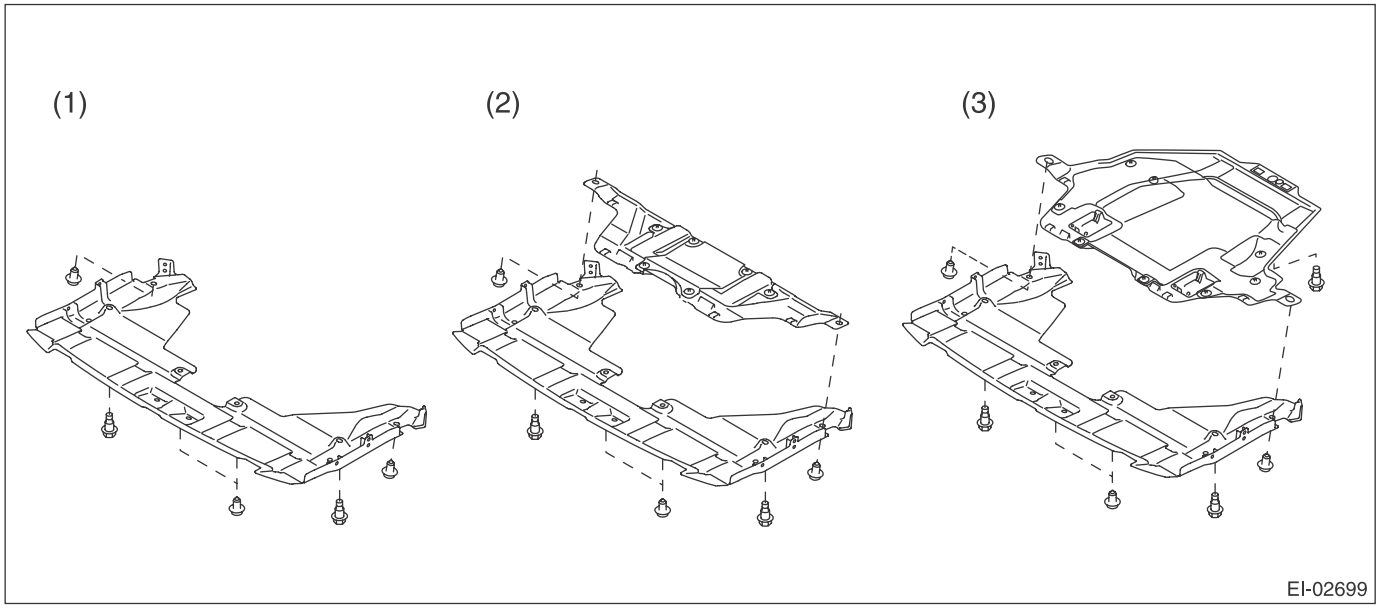

(1) Small type (2) Medium type (3) Large type

B: INSTALLATION

CAUTION:
Install the under cover so that the under cover front end (b) comes inside of the front bumper face (a).

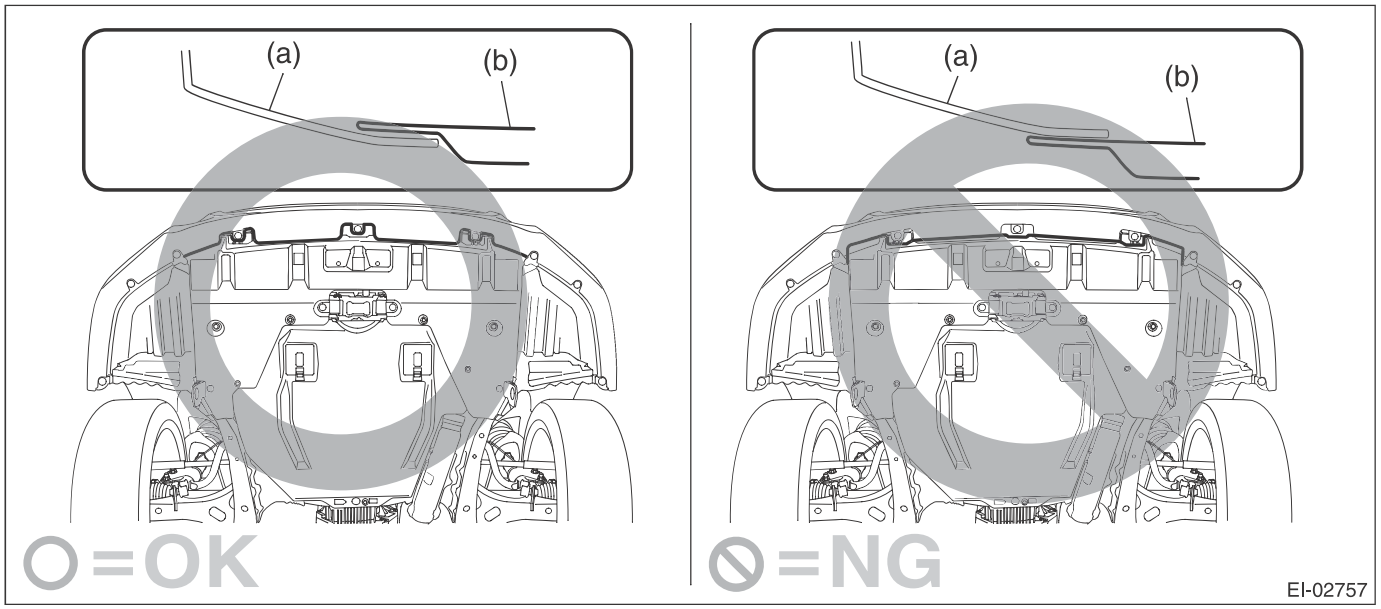

Install each part in the reverse order of removal.

Tightening torque:
17.5 N·m (1.78 kgf-m, 12.9 ft-lb)

6. Floor Under Protector

A: REMOVAL

1) Lift up the vehicle.

NOTE:
A plate type lift cannot be used.

2) Remove the bolts and clips, and remove the front under protector.

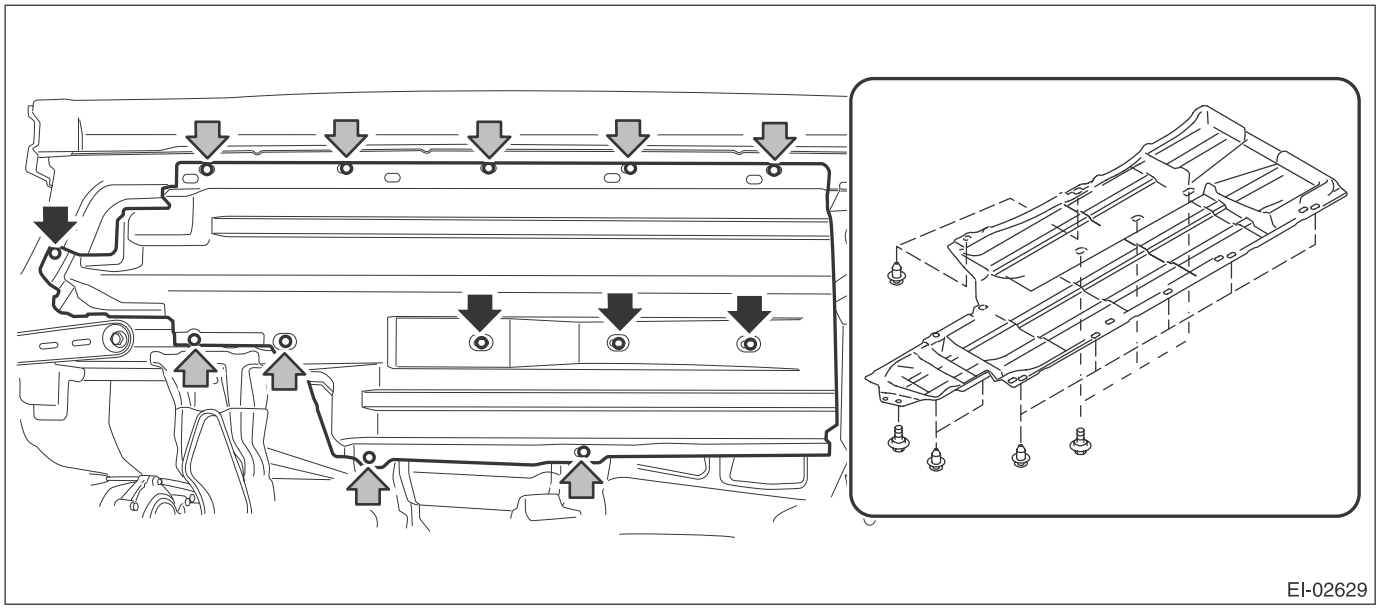

B: INSTALLATION

Install each part in the reverse order of removal.

Tightening torque:
Refer to "COMPONENT" of "General Description". <Ref. to EI-2, FLOOR UNDER PROTECTOR, COMPONENT, General Description.>

7. Fuel Tank Protector

A: REMOVAL

1) Lift up the vehicle.
2) Remove the fuel tank protector.
   (1) Remove the bolt and nuts and remove the fuel tank protector.
   (2) Remove the clip.

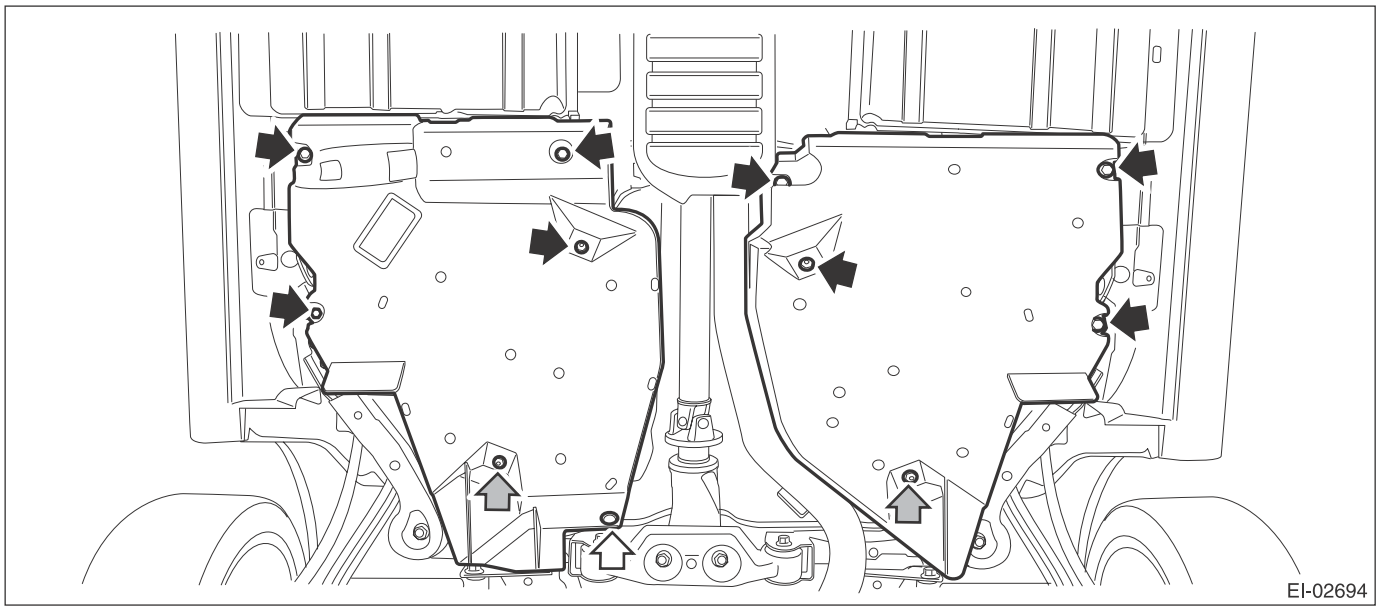

B: INSTALLATION

Install each part in the reverse order of removal.

CAUTION:
Do not reuse the nut (self-locking nuts). Always replace them with new ones.

Tightening torque:
Refer to "COMPONENT" of "General Description". <Ref. to EI-3, FUEL TANK PROTECTOR, COMPONENT, General Description.>

8. Mud Guard

A: REMOVAL

1) Lift up the vehicle.
2) Remove the wheels.
3) Remove the clips, and remove the mud guard.

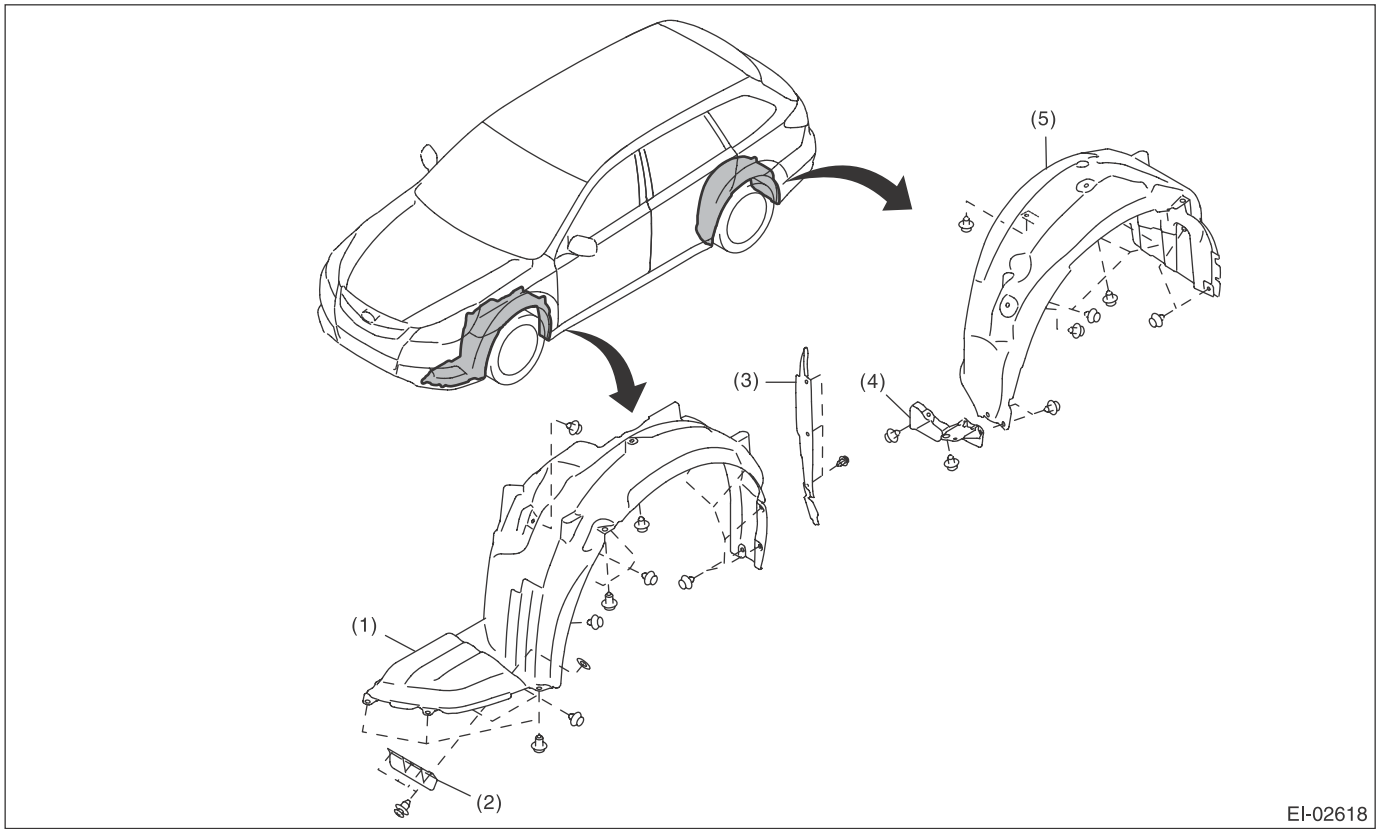

(1) Front mud guard
(2) Front air flap plate
(3) Fender cover lower
(4) Rear air flap plate
(5) Rear mud guard

B: INSTALLATION

Install each part in the reverse order of removal.

Tightening torque:
Wheel nut: 120 N·m (12.2 kgf-m, 88.5 ft-lb)

9. Front Bumper

A: REMOVAL

1) Disconnect the ground cable from battery.
2) Remove the front bumper face assembly.
   (1) Remove the clips, turn over the front mud guard, and disconnect the fog light connector. (Model with fog light)

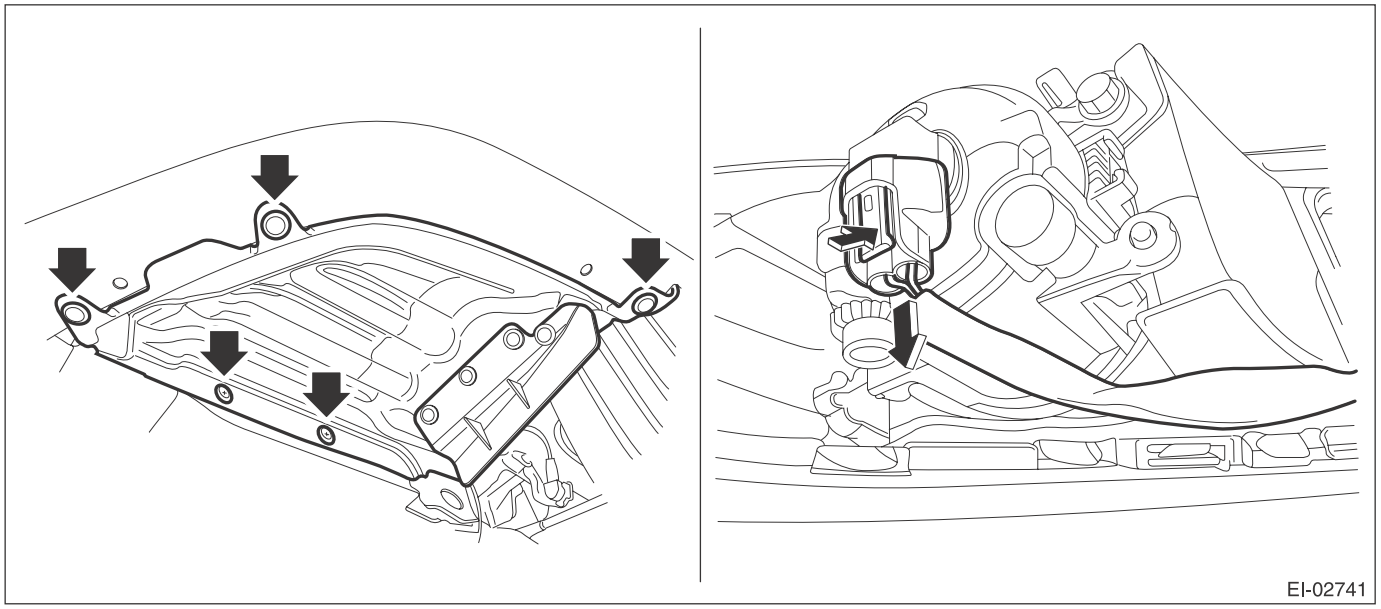

   (2) Remove the clips at the upper side of the bumper.
   (3) Remove the clips from the fender.

(4) Remove the clips at the lower side of bumper.

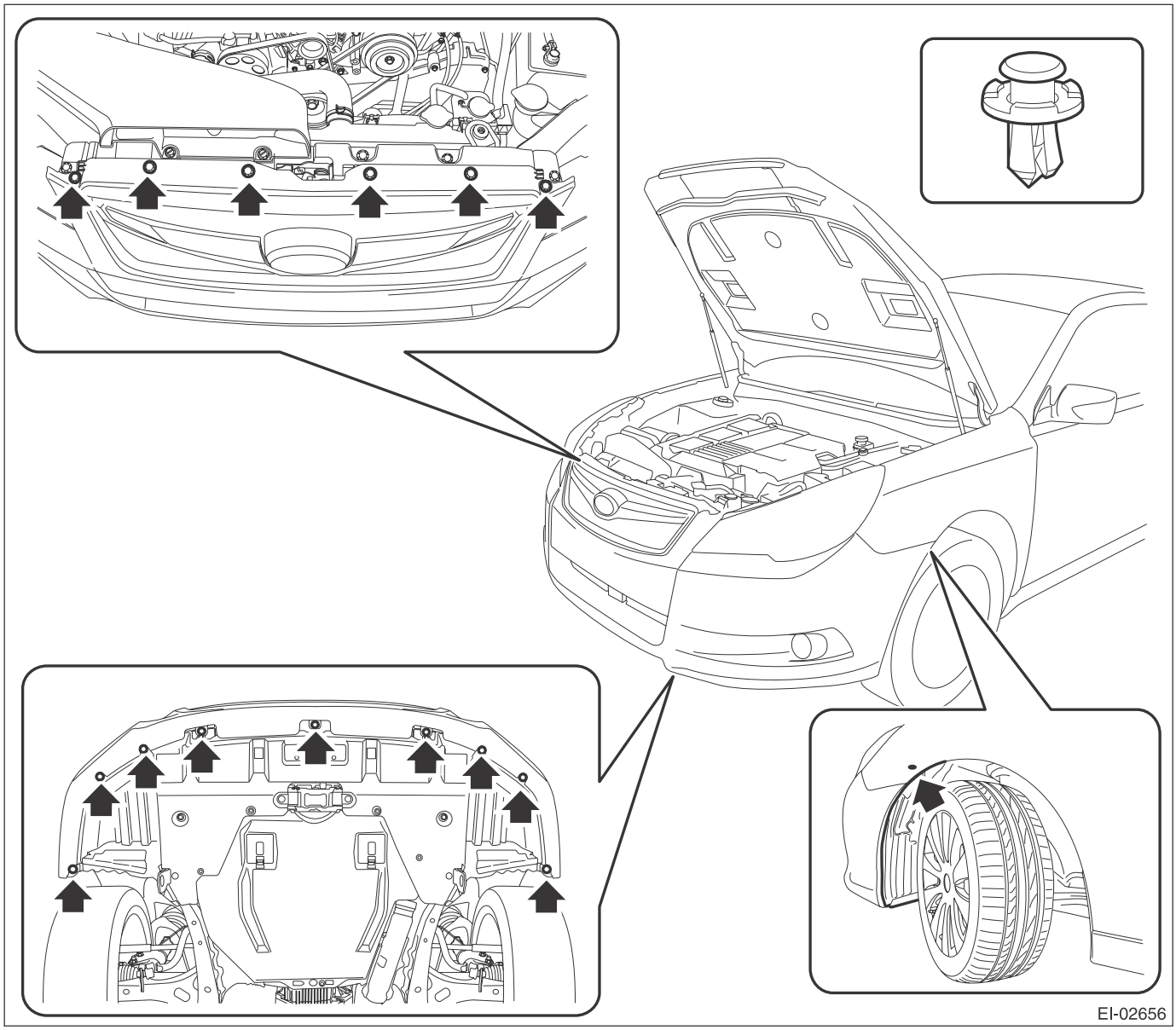

(5) Detach the flange section on the bumper face side from the bracket side front UPR.

CAUTION:
Do not pull forcibly. It may damage the flange sections of the bumper face.

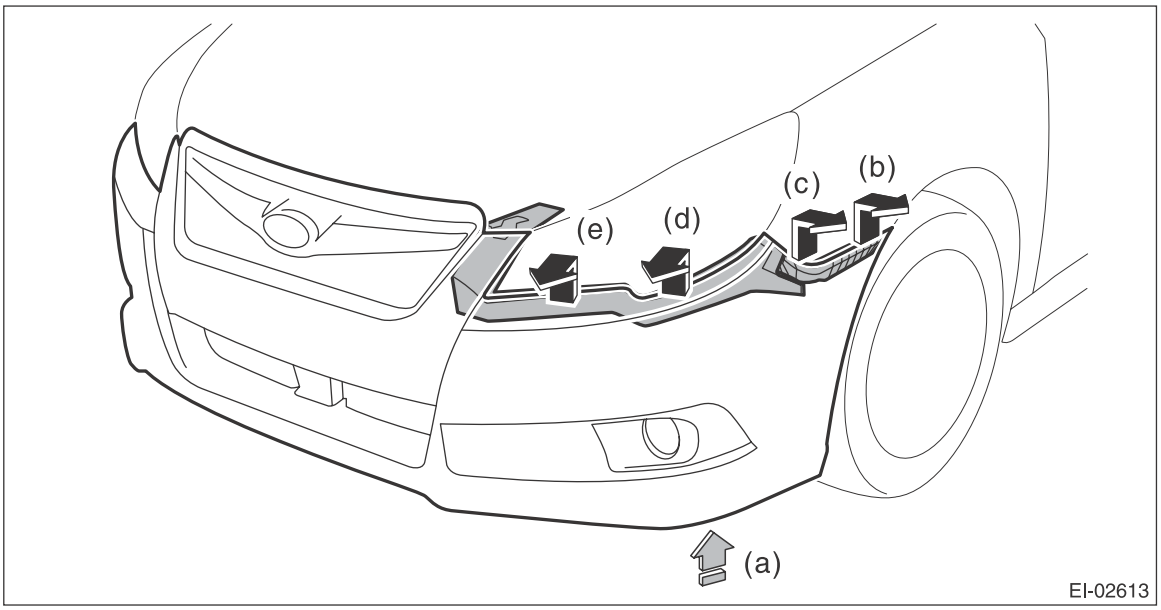

NOTE:
Detach the parts in order from (b) to (e) while pulling up the lower side of the fog light (a).
Detach the opposite side in the same manner.

3) Remove the beam COMPL front ASSY.
(1) Remove the energy absorber foam.
(2) Remove the bolts, and remove the beam COMPL front from vehicle body.

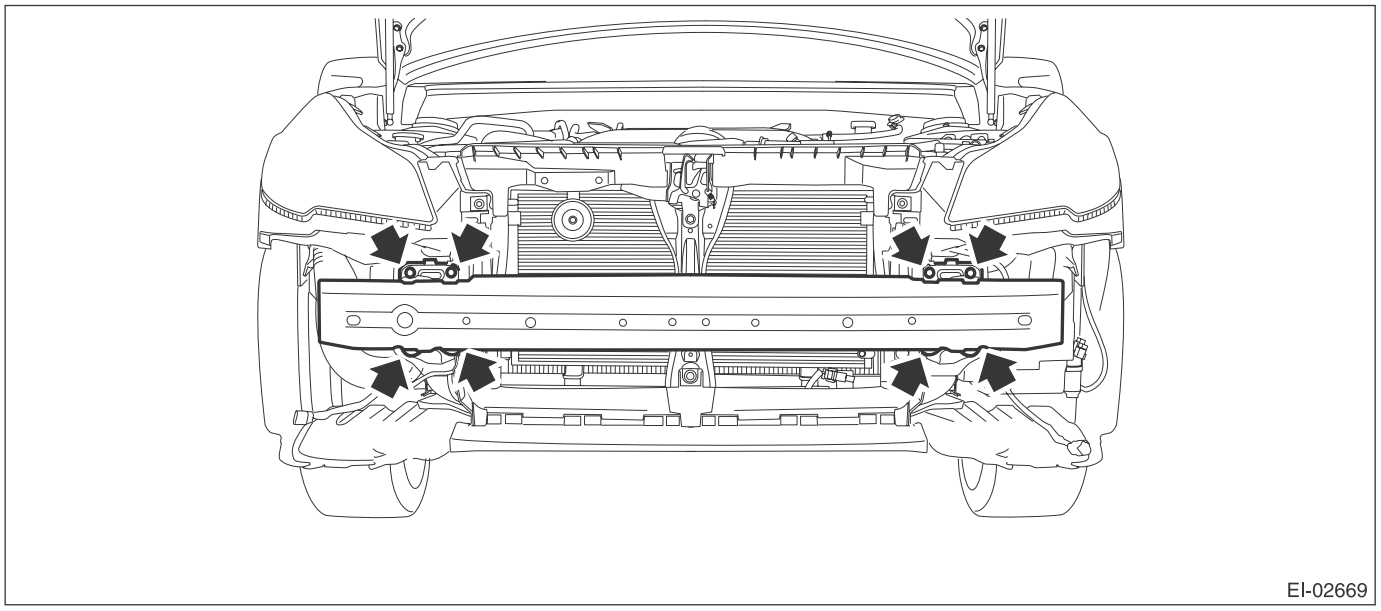

NOTE:
After all bolts are removed, raise the whole beam COMPL front a little to remove it from vehicle body.

4) Remove the bracket center LWR-front.

(1) Release the clips to remove the front under cover.

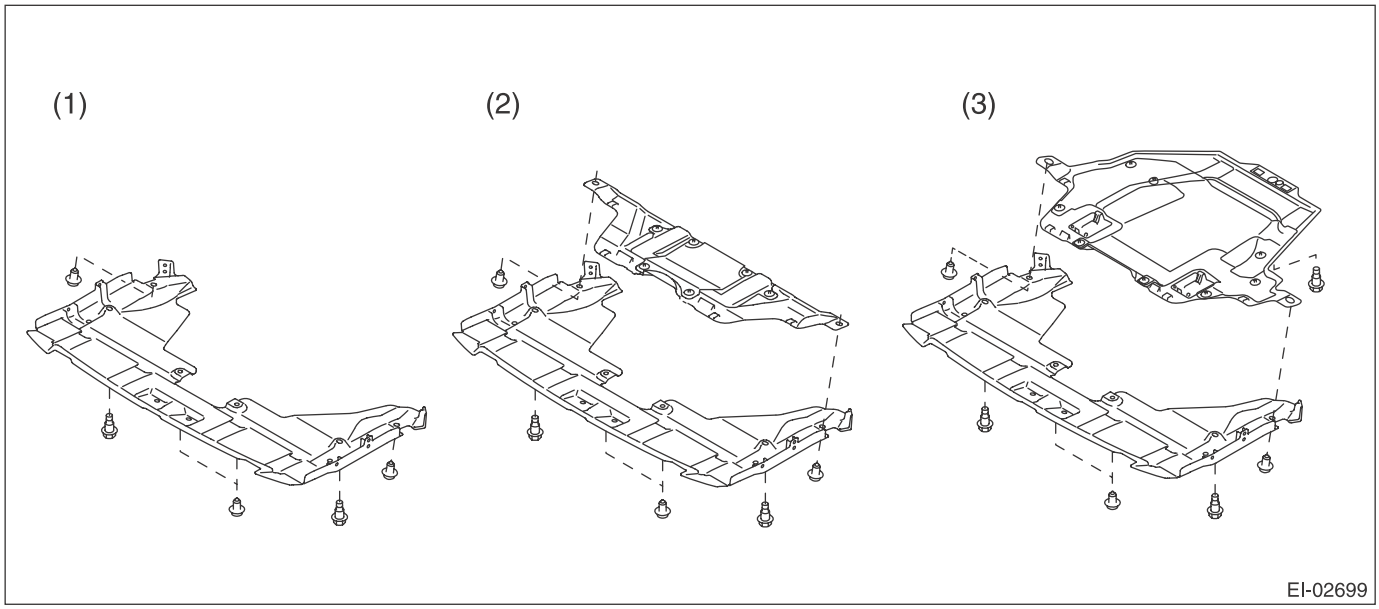

(1) Small type (2) Medium type (3) Large type

(2) Remove the clip, and remove the bracket center LWR-front.

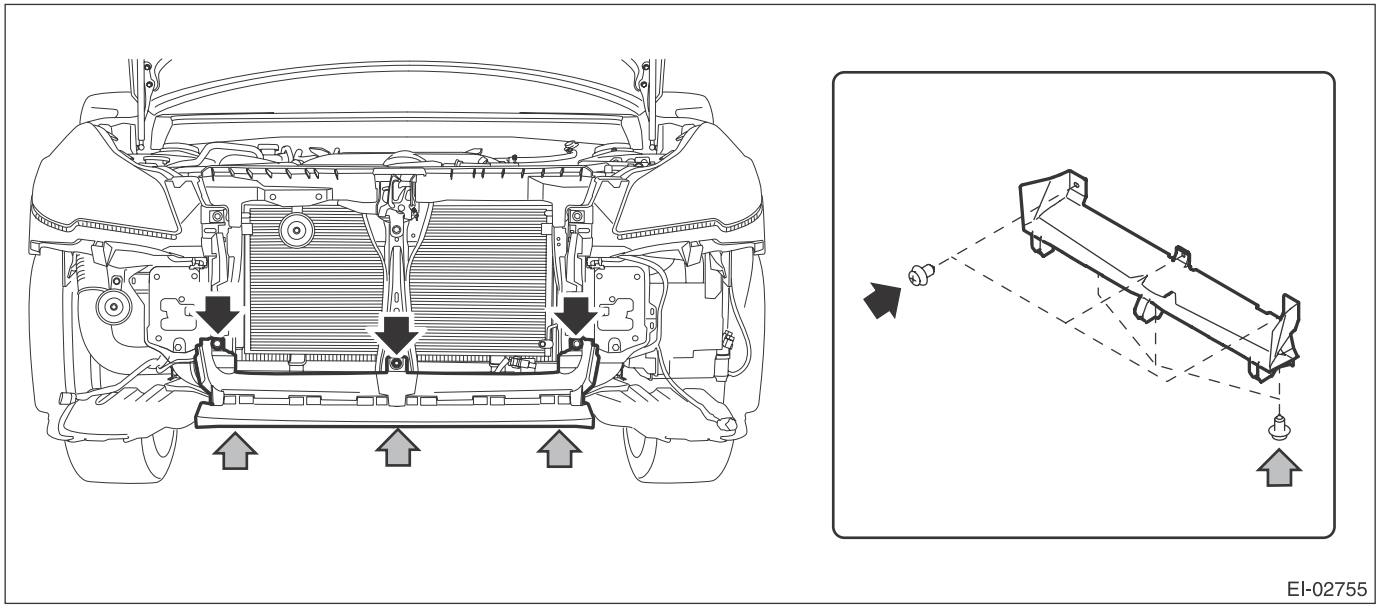

5) Remove the bracket side front UPR.
(1) Remove the screws.
(2) Release the claws and remove the bracket side front UPR.

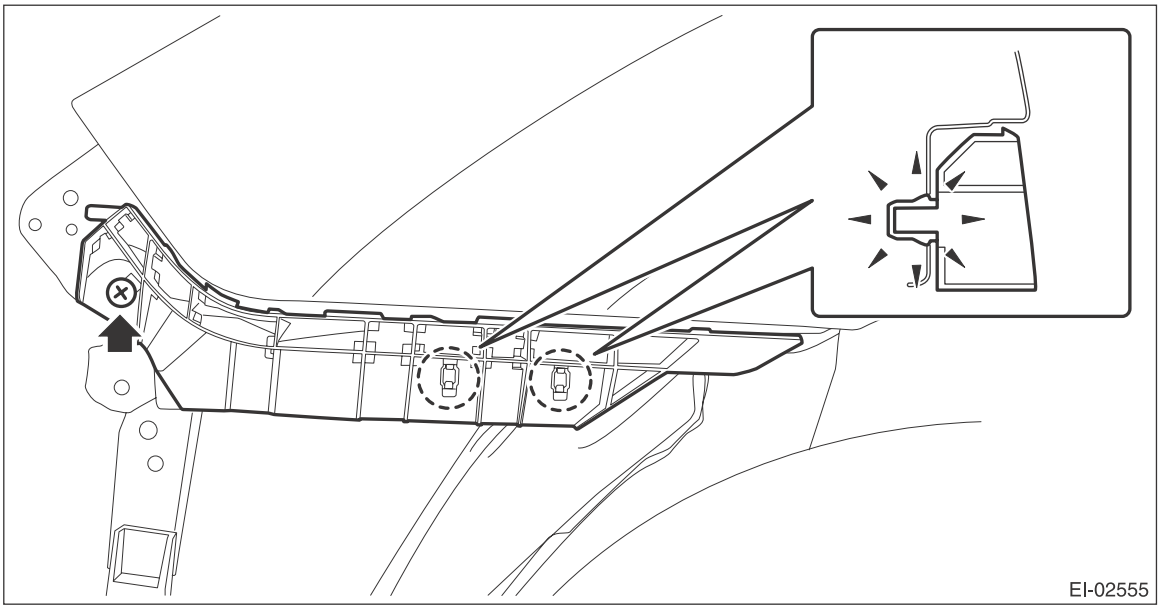
EI-02555

6) Remove the bolts and pins, and remove the front fog light assembly.

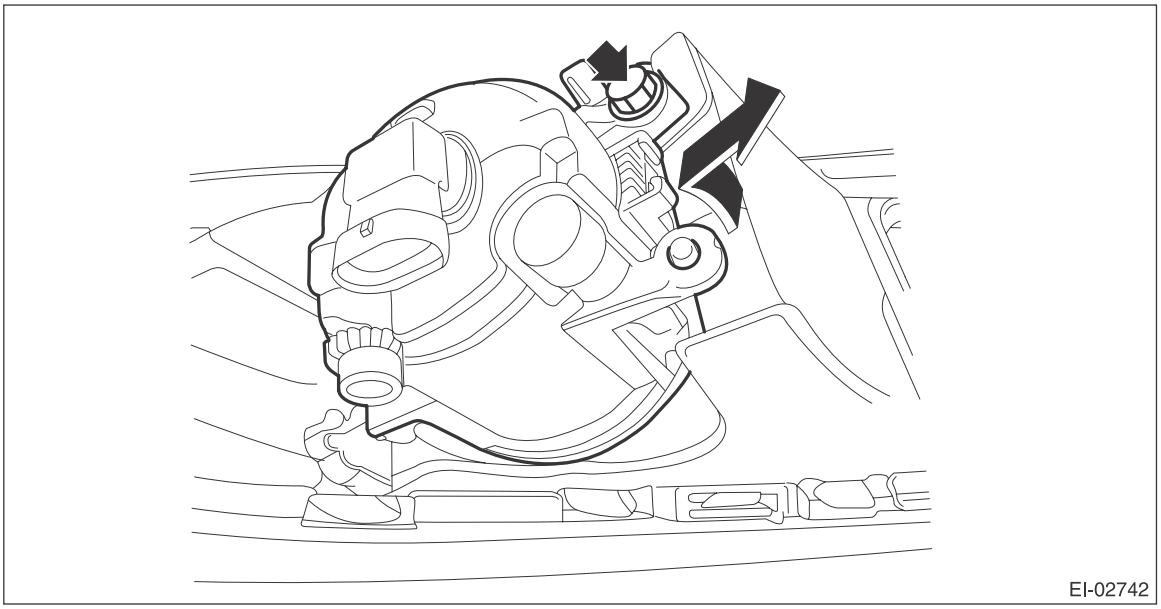
EI-02742

B: INSTALLATION

1) Install each part in the reverse order of removal.
2) Make sure that the bumper flanges are secured to the bracket side front UPR.

CAUTION:
Install the bumper face so that the under cover front end (b) comes inside the front bumper face (a).

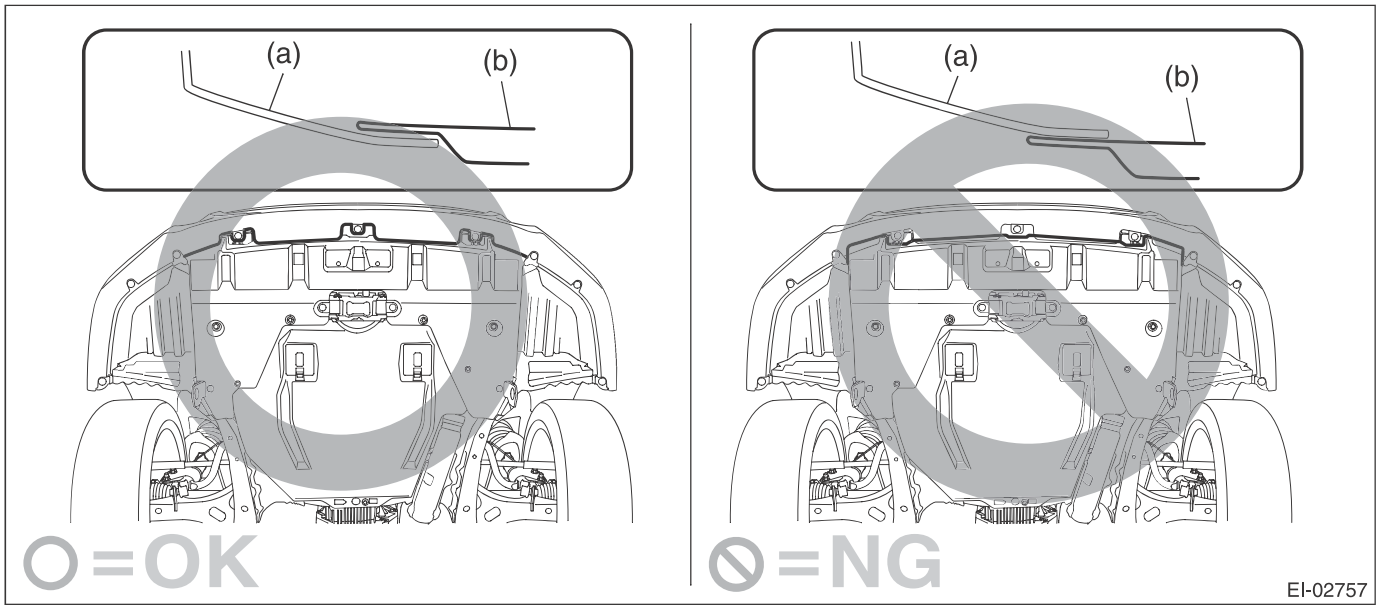

Tightening torque:
Refer to "COMPONENT" of "General Description". <Ref. to EI-5, FRONT BUMPER, COMPONENT, General Description.>

C: REPAIR

1. COATING METHOD FOR PP BUMPER

Process No.	Process name	Job contents	
1	Bumper installation	Place the bumper on a paint worktable as required. Use the paint worktable conforming to inner shape of bumper if possible.	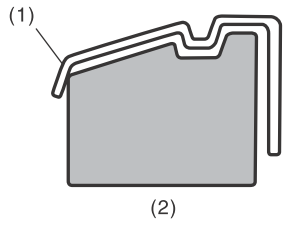 EI-00234 (1) Bumper (2) Set bumper section
2	Masking	Mask specified part (black base) with masking tape. Use masking tape for PP (example, Nichiban No. 533, etc.).	
3	Degreasing/cleaning	Clean all parts to be painted with white gasoline, normal alcohol, etc. to remove dirt, oil, fat, etc.	
4	Primer paint	Apply primer to all parts to be painted, using spray gun. Use primer (clear).	
5	Drying	Dry at normal temperature. [10 — 15 min. at 20°C (68°F)] In half-dried condition, PP primer paint is dissolved by solvent, e.g. thinner, etc. Therefore, if dust or dirt must be removed, use ordinary alcohol etc.	
6	Top coat paint (I)	Non-colored	Metallic paint
		Use section (block) paint for top coat. • Paint to be used (for each color): Solid paint Hardener PB Thinner T-301 • Mixture ratio: Main agent : Hardener = 4 : 1 • Viscosity: 10 — 13 sec./20°C (68°F) • Film thickness: 35 — 45 µ • Spraying pressure: 245 — 343 kPa (2.5 — 3.5 kgf/cm^2, 36 — 50 psi)	Use section (block) paint for top coat. • Paint to be used (for each color): Metallic paint Hardener PB Thinner T-306 • Mixture ratio: Main agent : Hardener = 10 : 1 • Viscosity: 10 — 13 sec./20°C (68°F) • Film thickness: 15 — 20 µ • Spraying pressure: 245 — 343 kPa (2.5 — 3.5 kgf/cm^2, 36 — 50 psi)
7	Drying	Not required	Dry at normal temperature. [10 min. or more at 20°C (68°F)] In half-dried condition, avoid dust, dirt.
8	Top coat paint (II)	Not required	Apply a clear coat to parts with top coat paint (I), three times at 5 — 7 minutes intervals. • Paint to be used: Metallic paint Hardener PB Thinner T-301 • Mixture ratio: Clear coat : Hardener = 6 : 1 • Viscosity: 14 — 16 sec./20°C (68°F) • Film thickness: 25 — 30 µ • Spraying pressure: 245 — 343 kPa (2.5 — 3.5 kgf/cm^2, 36 — 50 psi)
9	Drying	60°C (140°F), 60 min. or 80°C (176°F), 30 min. If higher than 80°C (176°F), PP may be deformed. Keep maximum temperature 80°C (176°F) or less.	
10	INSPECTION	Check paint.	
11	Removal of masking	Remove the masking tape applied in procedure 2.	

2. REPAIR INSTRUCTIONS FOR COLORED PP BUMPER

NOTE:
All PP bumpers are provided with a grained surface, and if the surface is damaged, it cannot normally be restored to its former condition. Damages limited to the shallow scratches that cause only a change in the luster of the base material or coating, can be almost fully restored. Before repairing a damaged area, explain this point to the customer and obtain an understanding about the matter.
Repair methods are outlined below, based on a classification of the extent of damage.
1) Minor damage causing only a change in the luster of the bumper due to a light touch
Almost restorable.

<table>
<tr><th>Process No.</th><th>Process name</th><th colspan="2">Job contents</th></tr>
<tr><td>1</td><td>Cleaning</td><td colspan="2">Clean the area to be repaired using water.</td></tr>
<tr><td>2</td><td>Sanding</td><td colspan="2">Grind the repairing area with #500 sand paper in a “feathering” motion.</td></tr>
<tr><td rowspan="3">3</td><td rowspan="3">Finish</td><td>Resin section</td><td>Coated section</td></tr>
<tr><td>Repeatedly apply wax to the affected area using soft cloth (such as flannel).
Recommended wax: NITTO KASEI Soft 99 TIRE WAX BLACK, or equivalent.</td><td rowspan="2">Perform either the same process as for the resin section or process No. 18 and subsequent in the 3) section, depending on the degree and nature of damage.</td></tr>
<tr><td>Polish the waxed area with clean cloth after 5 — 10 minutes.</td></tr>
</table>

2) Deep damage caused by scratching with fences etc.
A dent cannot be repaired but a whitened or swelled part can be removed.

<table>
<tr><th>Process No.</th><th>Process name</th><th colspan="2">Job contents</th></tr>
<tr><td>1</td><td>Cleaning</td><td colspan="2">Clean the damaged area with water.</td></tr>
<tr><td>2</td><td>Removal of damaged area</td><td colspan="2">Cut off protruding area, if any, due to collision, using a putty knife.</td></tr>
<tr><td>3</td><td>Sanding</td><td colspan="2">Grind the affected area with #100 — #500 sand paper.</td></tr>
<tr><td rowspan="2">4</td><td rowspan="2">Finish</td><td>Resin section</td><td>Coated section</td></tr>
<tr><td>Same as process No. 3 in the 1) section.</td><td>Perform process No. 12 and subsequent operations in the 3) section.</td></tr>
</table>

3) Deep damage such as a break or hole that requires filling
Much of the peripheral grained surface must be sacrificed for repair. The degree of restoration is not really worth the expense. (The surface, however, will become almost flush with adjacent areas.)
Recommended repair kit: PP Part Repair Kit (NRM)

<table>
<tr><th>Process No.</th><th>Process name</th><th colspan="2">Job contents</th></tr>
<tr><td>1</td><td>Bumper removal</td><td colspan="2">Remove the bumper as required.</td></tr>
<tr><td>2</td><td>Removal of parts</td><td colspan="2">Remove the parts built into bumper as required.</td></tr>
<tr><td>3</td><td>Bumper placement</td><td>Place the bumper on a paint worktable as required.
It is recommended to use the paint worktable conforming to internal shape of bumper.</td><td> 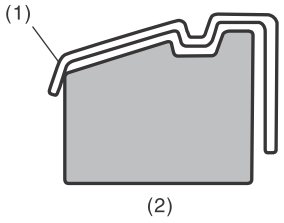

EI-00234
(1) Bumper
(2) Set bumper section</td></tr>
<tr><td>4</td><td>Surface preparation</td><td colspan="2">Remove dust, oil, etc. from areas to be repaired and surrounding areas, using a suitable solvent (NRM No. 900 Precleno, white gasoline, or alcohol, etc.).</td></tr>
<tr><td>5</td><td>Cutting</td><td>If the damage is a crack or a hole, cut a guide slit of 20 to 30 mm (0.79 to 1.18 in) in length along the crack or hole up to the bumper base surface. Next, use a knife or grinder to carve a V-shaped groove in the area for repair.</td><td> 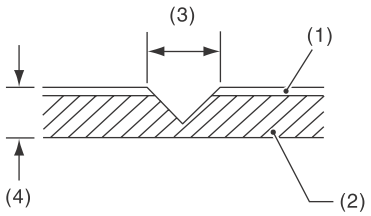

EI-00235
(1) Paint surface
(2) PP base surface
(3) 20 — 30 mm (0.79 — 1.18 in)
(4) 3 mm (0.12 in)</td></tr>
<tr><td>6</td><td>Sanding (I)</td><td colspan="2">Grind beveled surface with sand paper (#40 — #60) to smooth finish.</td></tr>
<tr><td>7</td><td>Cleaning</td><td colspan="2">Clean the sanded surface with the same solvent as used in procedure No. 4.</td></tr>
<tr><td rowspan="2">8</td><td rowspan="2">Temporary welding</td><td colspan="2">Grind the side just opposite the beveled area with sand paper (#40 — #60) and clean using a solvent.
Temporarily spot-weld the side, using PP welding rod and heater gun.</td></tr>
<tr><td colspan="2"> 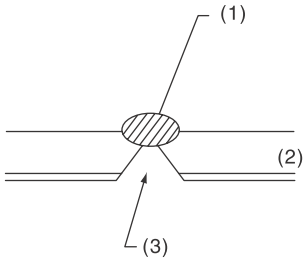

EI-00236
(1) Welded point (use heater gun and PP welding rod)
(2) PP base surface
(3) Beveled section
NOTE:
• Do not melt welding rod until it flows out. This results in reduced strength.
• Leave the welded spot unattended until it cools completely.</td></tr>
</table>

Process No.	Process name	Job contents
9	Welding	Using a heater gun and PP welding rod, weld the beveled spot while melting both the rod and damaged area. 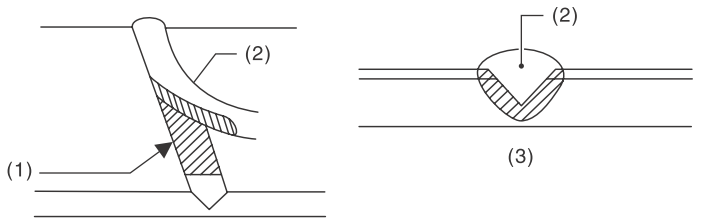 EI-00237 (1) Welding rod (2) Melt hatched area (3) Section NOTE: • Melt the sections indicated by hatched area. • Do not melt the welding rod until it flows out, in order to provide strength. • Always keep the heater gun 1 to 2 cm (0.4 to 0.8 in) away from the welding spot. • Leave the welded spot unattended until it cools completely.
10	Sanding (II)	Remove excess part of weld with a putty knife. If a drill or disc wheel is used instead of the knife, operate it at a rate lower than 1,500 rpm and grind the excess part little by little. A higher rpm will cause the PP substrate to melt from the heat.  EI-00042 Sand the welded spot smooth with #240 sand paper.
11	Masking	Mask the black substrate section using masking tape. Recommended masking tape: Nichiban No. 533 or equivalent
12	Cleaning/degreasing	Completely clean the entire coated area, using solvent similar to that used in procedure No. 4.
13	Primer coating	Apply a coat of primer to the repaired surface and its surrounding areas. Mask these areas, if necessary. Recommended primer: Mp/ 364 PP Primer NOTE: Be sure to apply a coat of primer using a spray gun at a pressure of 245 — 343 kPa (2.5 — 3.5 kgf/cm^2, 36 — 50 psi).
14	Leave unattended	Leave the repaired area unattended at 20°C (68°F) for 10 to 15 minutes until primer is half-dry. NOTE: If dirt or dust comes in contact with the coated area, wipe it off with a cloth dampened with alcohol. (Do not use thinner since the coated area tends to melt.)
15	Primer surfacer coating	Apply primer surfacer to the repaired area two or three times at an interval of 3 — 5 minutes. Recommended surfacer: • UPS 300 Flex Primer • No. 303 UPS 300 Exclusive hardener • NPS 725 Exclusive Reducer (thinner) • Mixture ratio: 2 : 1 (UPS 300 : No. 303) • Viscosity: 12 — 14 sec./20°C (68°F) • Coating film thickness: 40 — 50 μ
16	Drying	Allow the coated surface to dry for 20 minutes at 20°C (68°F) [or 30 minutes at 60°C (140°F)].

Process No.	Process name	Job contents	
17	Sanding (III)	Sand the coated surface and its surrounding areas using #400 sand paper and water.	
18	Cleaning/degreasing	Same as process No. 12.	
19	Top coat (I)	Non-colored	Metallic paint
		Use a “block” coating method. • Recommended paint: Suncryl (SC) No. 307 Flex Hardener SC Reducer (thinner) • Mixture ratio: Suncryl (SC): No. 307 Flex Hardener = 3 : 1 • Viscosity: 11 — 13 sec./20°C (68°F) • Coating film thickness: 40 — 50 µ • Spraying pressure: 245 — 343 kPa (2.5 — 3.5 kgf/cm^2, 36 — 50 psi)	Use a “block” coating method. • Recommended paint: Suncryl (SC) No. 307 Flex Hardener SC Reducer (thinner) • Mixture ratio: Suncryl (SC): No. 307 Flex Hardener = 3 : 1 • Viscosity: 11 — 13 sec./20°C (68°F) • Coating film thickness: 20 — 30 µ • Spraying pressure: 245 — 343 kPa (2.5 — 3.5 kgf/cm^2, 36 — 50 psi)
20	Leave unattended	Not required	Leave unattended at 20°C (68°F) for at least 10 minutes until the topcoated area is half-dry. NOTE: Be careful to keep dust or dirt from coming in contact with the affected area.
21	Top coat (II)	Not required	Apply a clear coat three times at an interval of 3 to 5 minutes. • Recommended paint: SC710 Overlay Clear No. 307 Flex Hardener SC Reducer (thinner) • Mixture ratio: Suncryl (SC): No. 307 Flex Hardener = 3 : 1 • Viscosity: 10 — 13 sec./20°C (68°F) • Coating film thickness: 20 — 30 µ • Spraying pressure: 245 — 343 kPa (2.5 — 3.5 kgf/cm^2, 36 — 50 psi)
22	Drying	Allow the coated surface to dry for two hours at 20°C (68°F) or 30 minutes at 60°C (140°F)]. NOTE: Do not allow the temperature to exceed 80°C (176°F) since this will deform the PP substrate.	
23	INSPECTION	Carefully check the condition of the repaired area.	
24	Removal of masking	Remove the masking tape applied in process No. 11 and 13.	
25	Parts installation	Install parts on the bumper in reverse order of removal.	
26	Bumper installation	Install the bumper.	

10.Rear Bumper

A: REMOVAL

1) Remove the rear combination light assembly.

- Sedan model
  1. Remove the trunk room trim. <Ref. to EI-127, REMOVAL, Trunk Room Trim.>
  2. Disconnect the connector.
  3. Release the nuts and clips, then remove the rear combination light assembly.

CAUTION:
Be careful not to damage the clips.

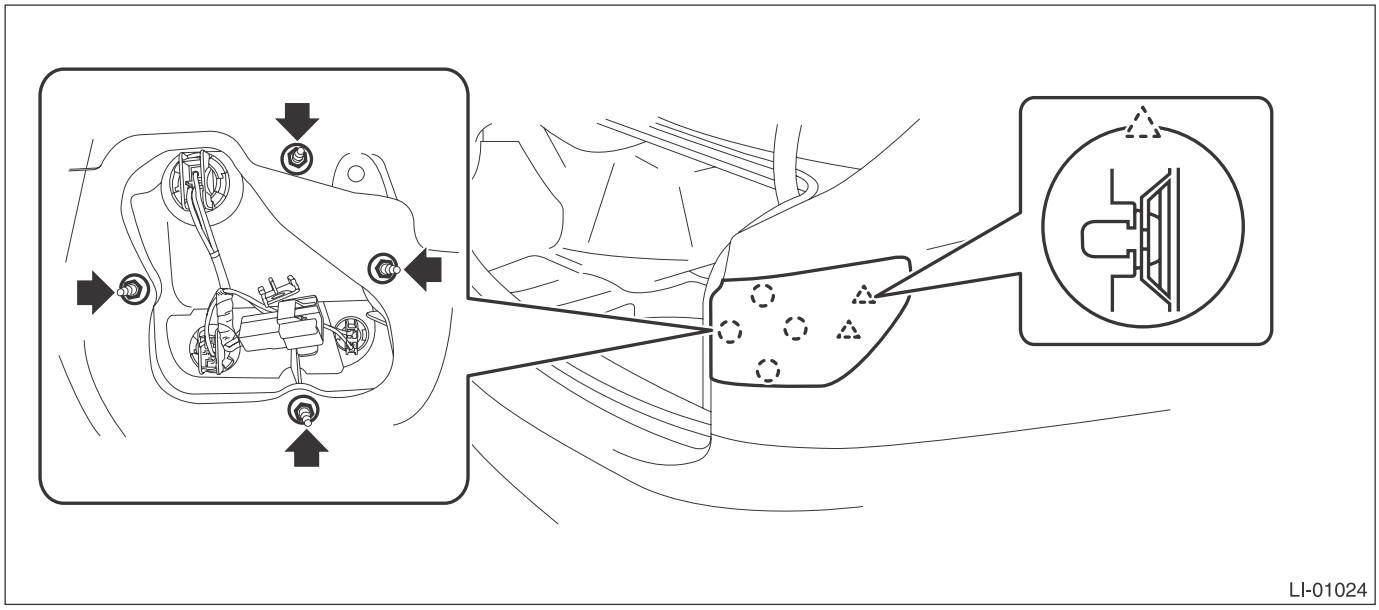

- OUTBACK model
  1. Remove the clips and detach the rear combination light covers.

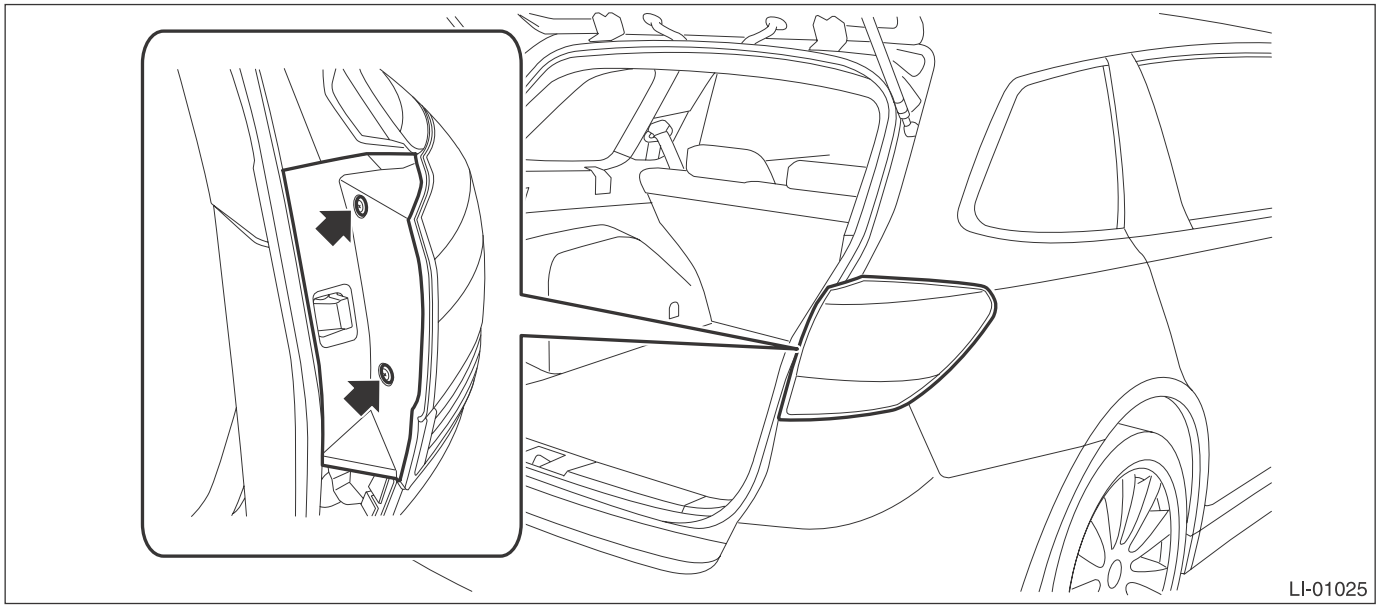

  2. Release the bolts and clips, then pull out the rear combination light assembly to the vehicle rear.

3. Disconnect the connector and remove the rear combination light assembly.

CAUTION:
Be careful not to damage the clips.

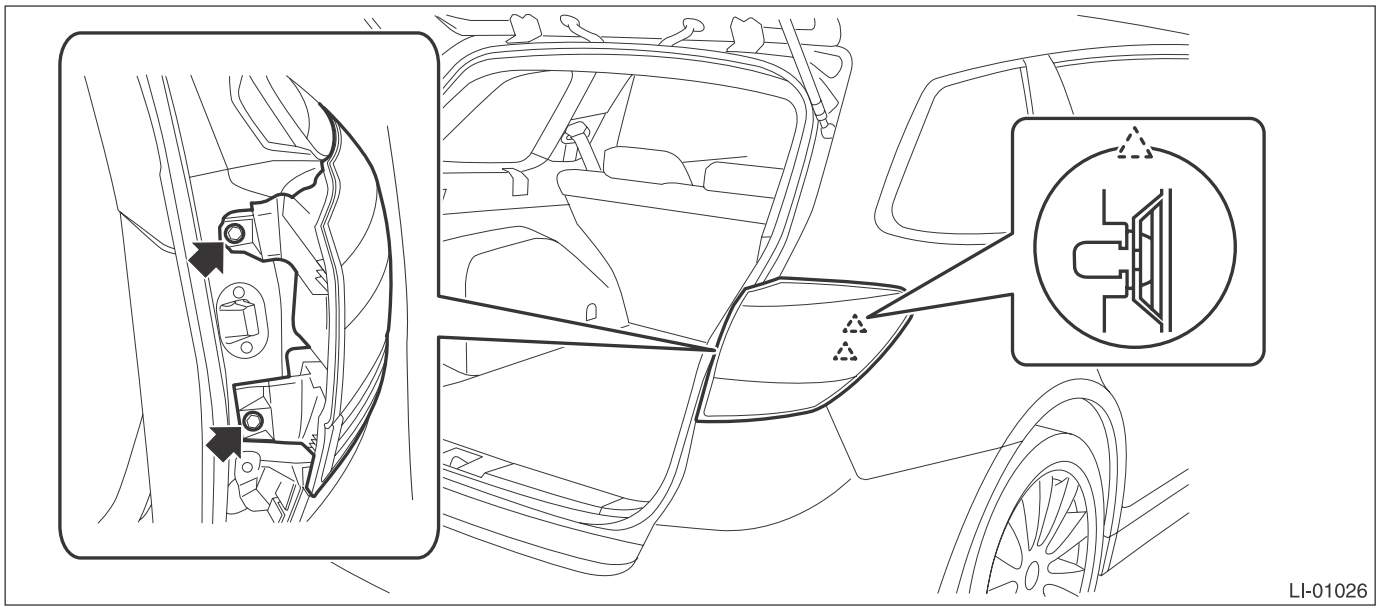

2) Remove the rear bumper face assembly.
(1) Remove the clip inside the wheel house.
(2) Remove the clips at the lower side of rear bumper.

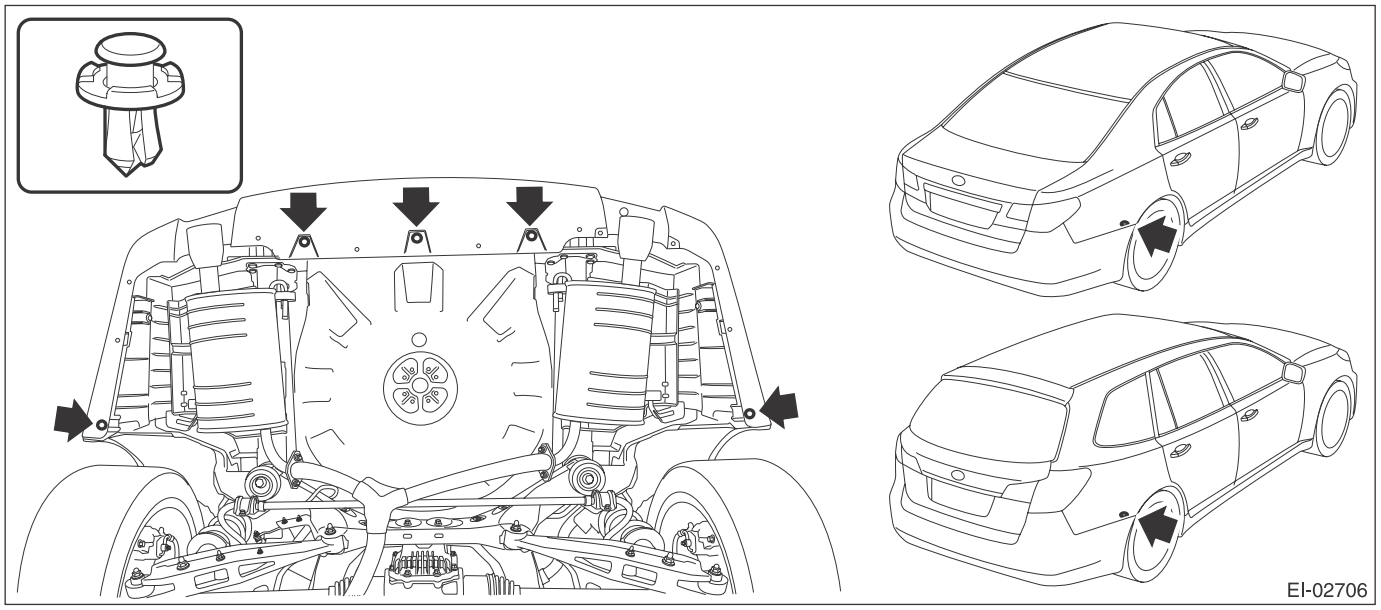

(3) Detach the (b) and (c) while pulling up (a) of the bumper.
(4) Detach (e) while pulling up the bumper (d).
(5) Detach the opposite side in the same manner.

(6) Detach in order from (f) to (h) while pulling up center part of the bumper face.

CAUTION:
Do not pull with a excessive force. Otherwise the bracket installation area may be damaged.

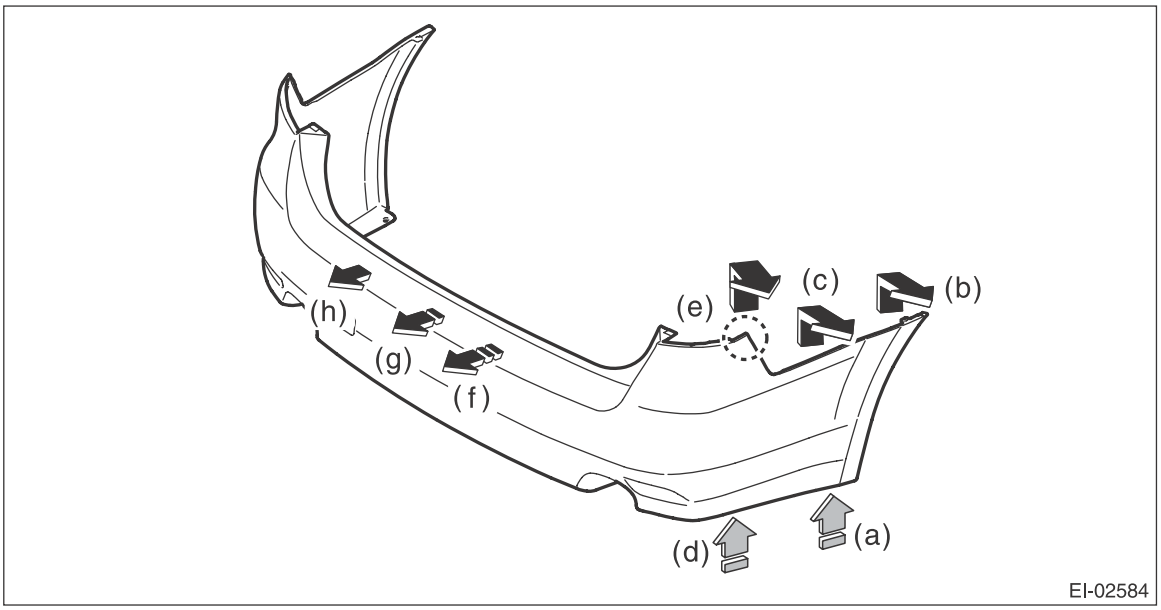

3) Remove the rear bumper beam assembly.
(1) Remove the energy absorber foam.
(2) Remove the nuts, and remove the rear bumper beam assembly from vehicle body.

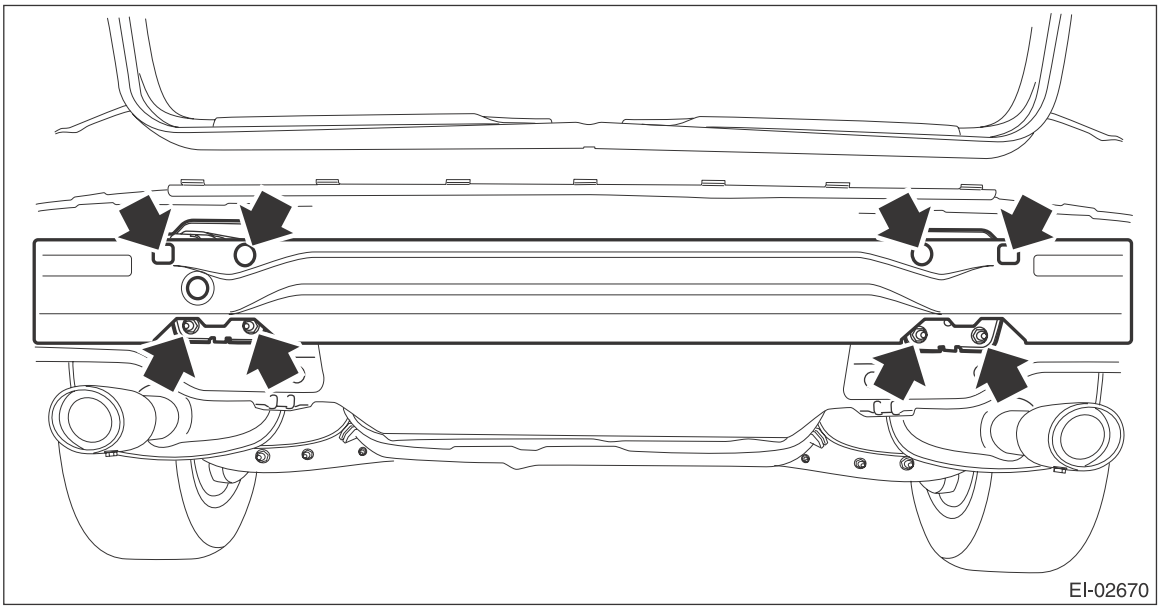

NOTE:
After all nuts are removed, raise the rear bumper beam assembly a little to remove it from vehicle body.

4) Remove bumper brackets.

- Sedan model

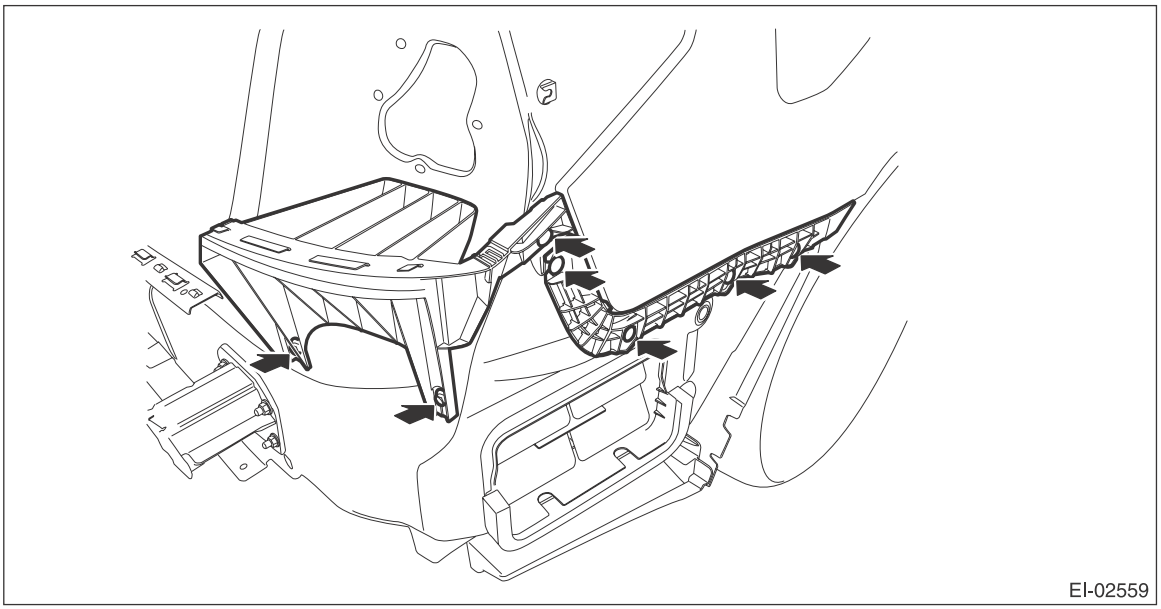

- OUTBACK model

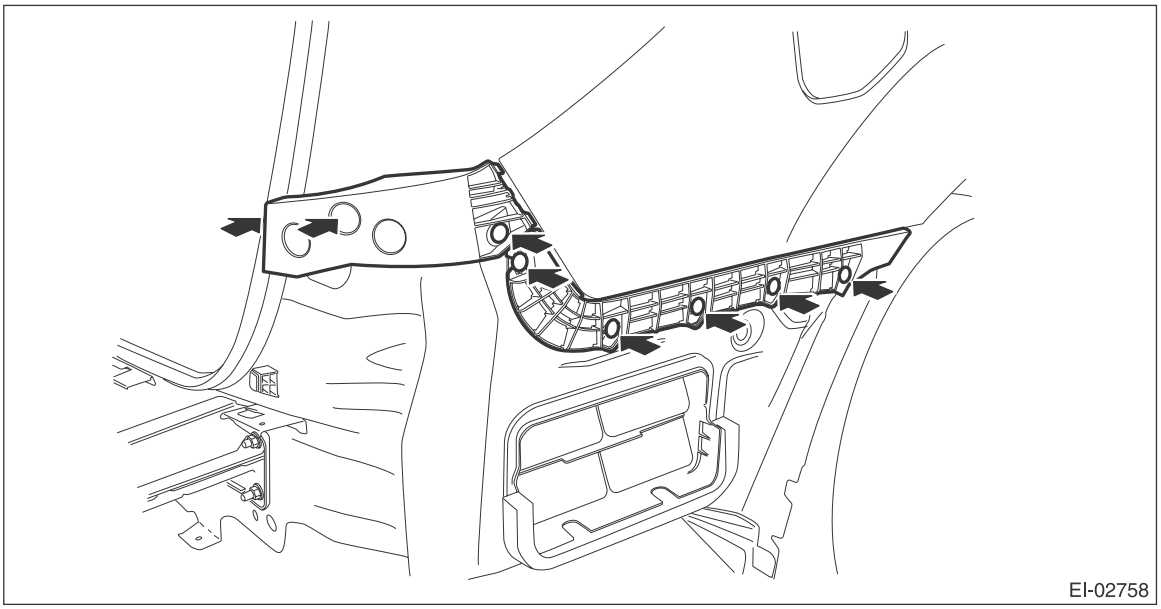

5) Remove the reflex reflector. (OUTBACK model)

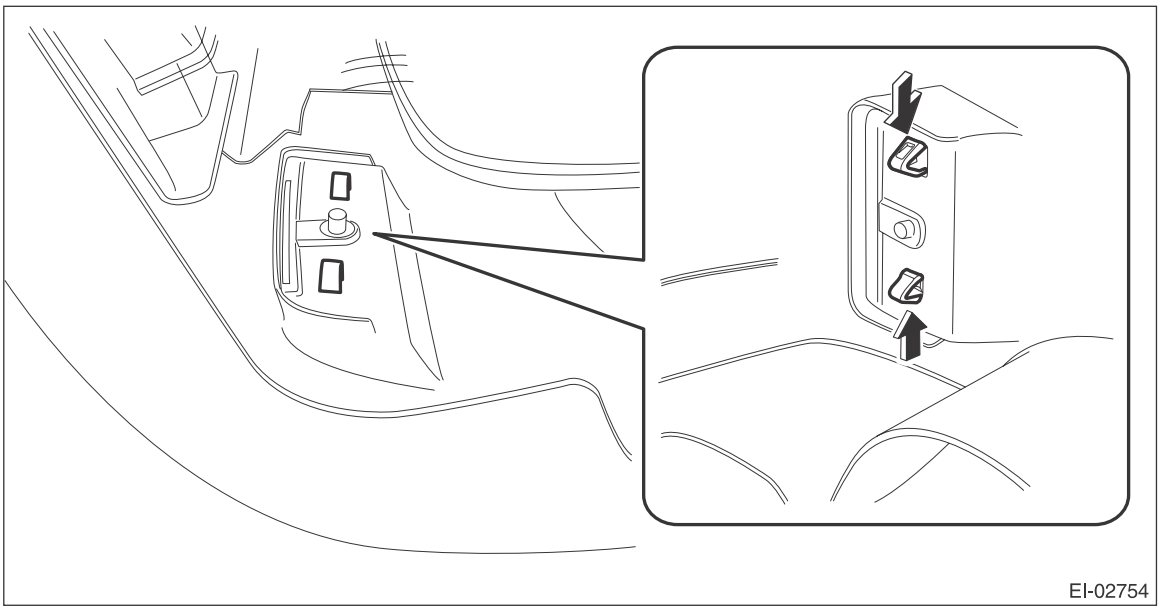

(1) Press the claws of reflex reflector from the back of the bumper face.
(2) Remove the reflex reflector.

B: INSTALLATION

Install each part in the reverse order of removal.

NOTE:
If the bumper face comes off too easily, adjust the hook of the bracket side.

Tightening torque:
Refer to "COMPONENT" of "General Description". <Ref. to EI-6, REAR BUMPER, COMPONENT, General Description.>

C: REPAIR

Refer to the front bumper repair. <Ref. to EI-45, REPAIR, Front Bumper.>

11.Side Sill Spoiler

A: REMOVAL

Remove the clips and detach the side spoiler.

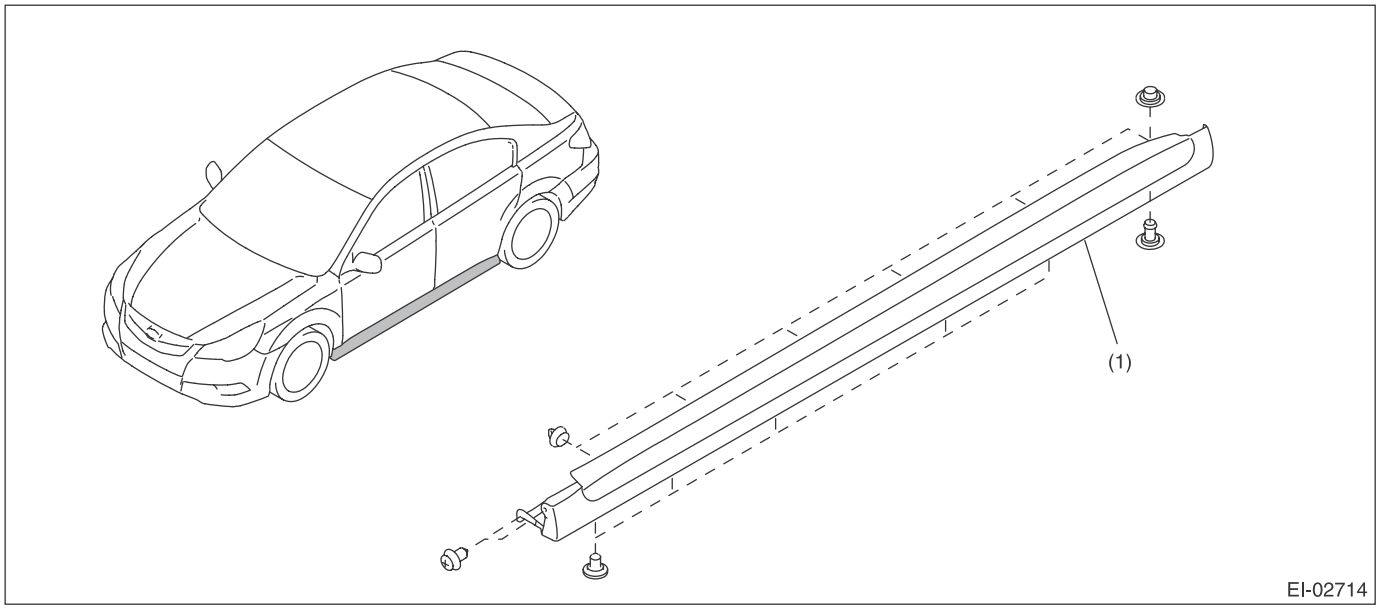

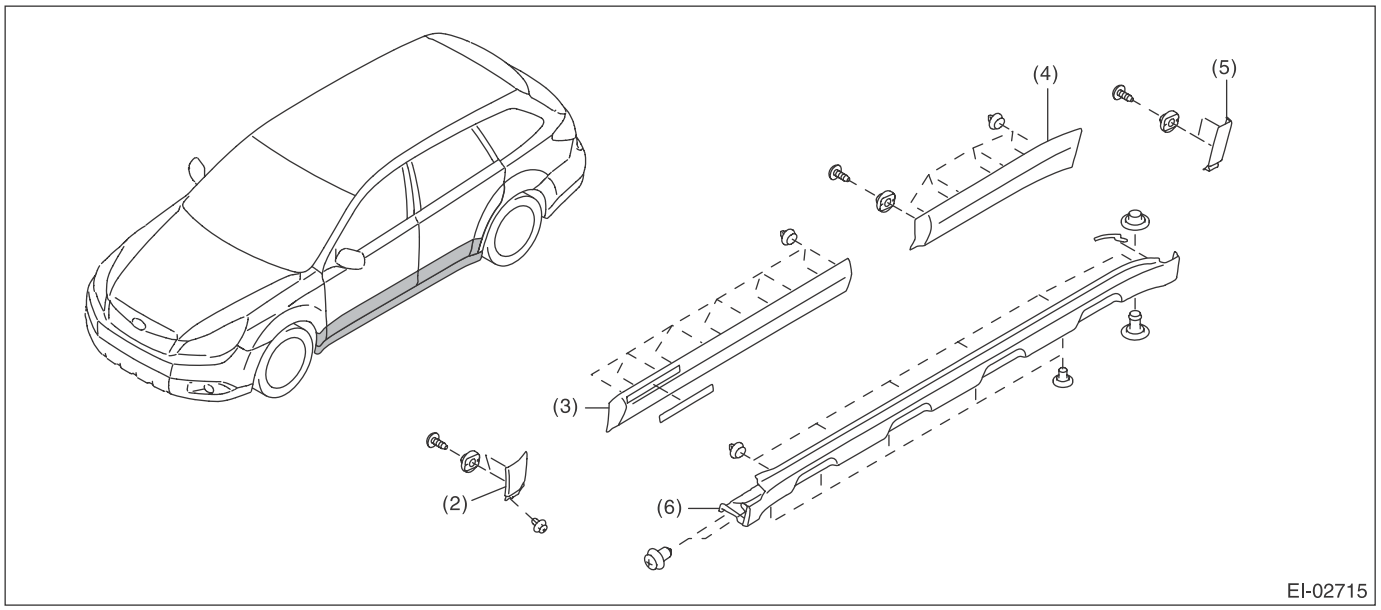

(1) Side sill garnish ASSY (Sedan model)
(2) Garnish ASSY front fender (OUTBACK model)
(3) Garnish ASSY front door (OUTBACK model)
(4) Garnish ASSY rear door (OUTBACK model)
(5) Garnish ASSY rear quarter (OUTBACK model)
(6) Side sill garnish ASSY (OUTBACK model)

B: INSTALLATION

Install each part in the reverse order of removal.

12.Roof Molding

A: REMOVAL

CAUTION:
Be careful not to damage the body.

1) Remove the roof rail assembly. (OUTBACK model) <Ref. to EI-59, REMOVAL, Roof Rail.>
2) Turn over the front end of roof molding.
3) Using a flat tip screwdriver, slide the internal clip in the direction of arrow.

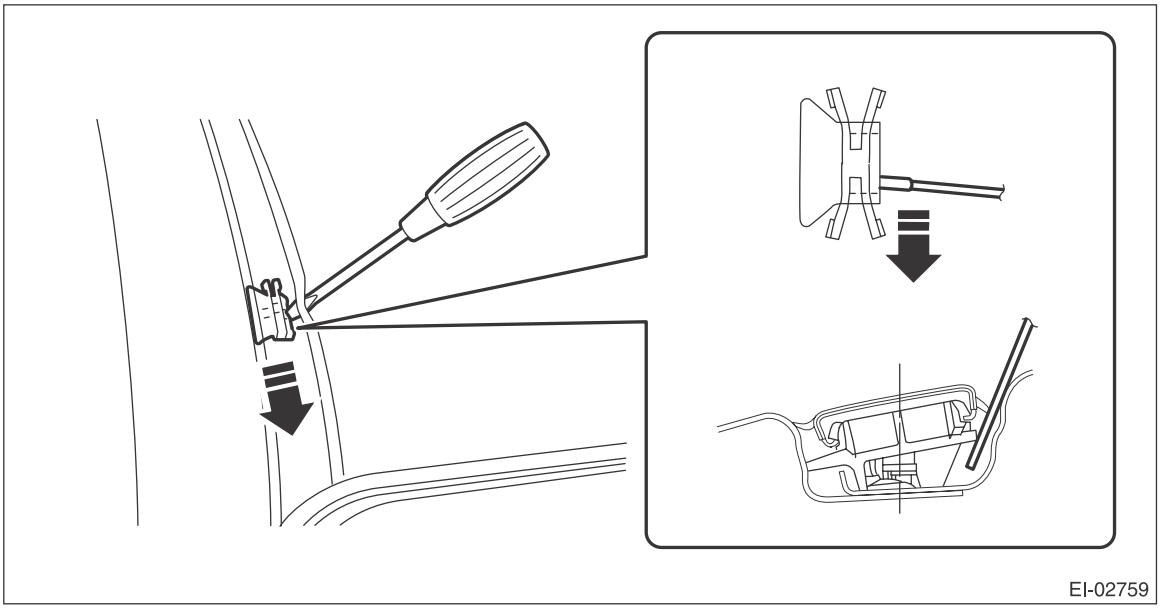
EI-02759

Right: Slide toward vehicle front.
Left: Slide toward vehicle rear.

4) Remove the clip from the stud on the body by sliding it.

- Sedan model: 6 clips per side

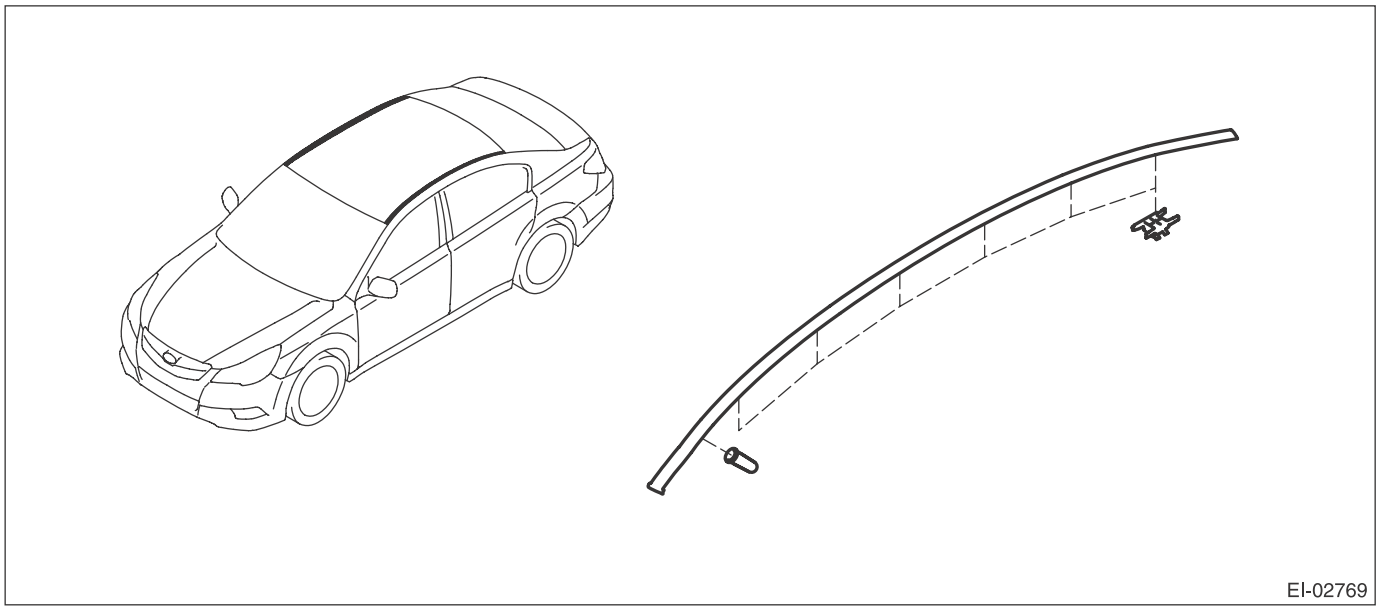
EI-02769

- OUTBACK model: 1 clip per side

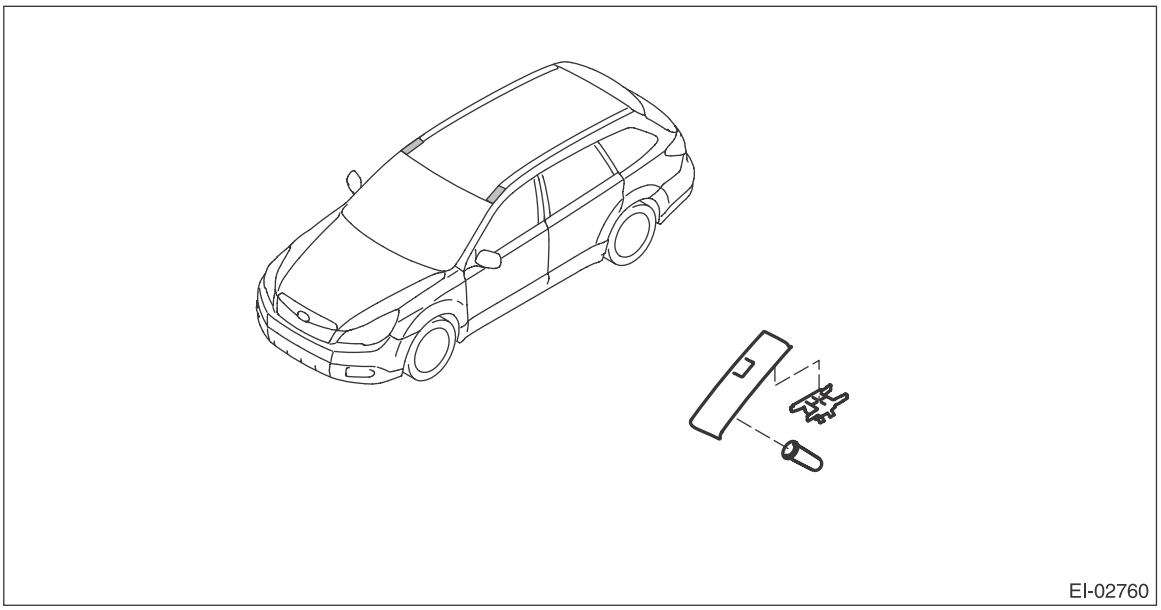

5) Remove the roof molding from the vehicle body by pulling it upward.

B: INSTALLATION

1) Remove the clips from the roof molding and attach them on the stud on body.

CAUTION:
- **Any clips damaged during roof molding removal must be replaced with new parts.**
- **While installing the roof molding, be careful not to catch the glass molding with the tip of the front side and rear side.**

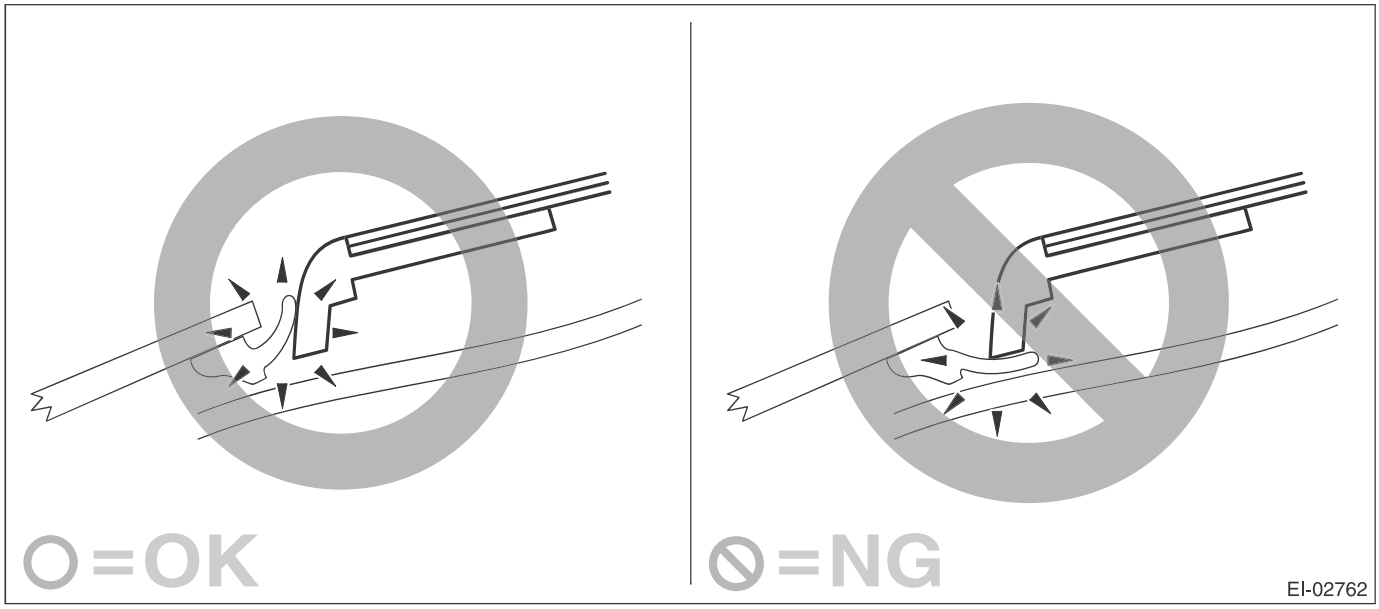

2) Apply the front end of roof molding to the front window, and attach the front positioning clip to the rivet on body.

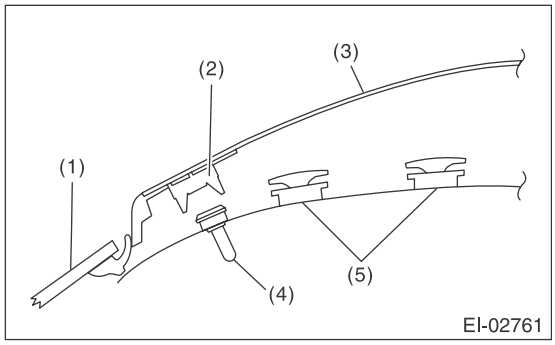

(1) Windshield
(2) Positioning clip
(3) Roof molding
(4) Rivet
(5) Clip

3) While pressing the roof molding from above, connect the roof molding with clips.

13.Roof Rail

A: REMOVAL

1) Remove the roof trim. <Ref. to EI-146, OUTBACK MODEL, REMOVAL, Roof Trim.>
2) Remove the curtain airbag module. <Ref. to AB-62, OUTBACK MODEL, REMOVAL, Curtain Airbag Module.>

CAUTION:
• Refer to "CAUTION" of "General Description" before handling the airbag module. <Ref. to AB-9, CAUTION, General Description.>
• Be careful not to damage the curtain airbag module during removal.
3) Remove the nine installing nuts.

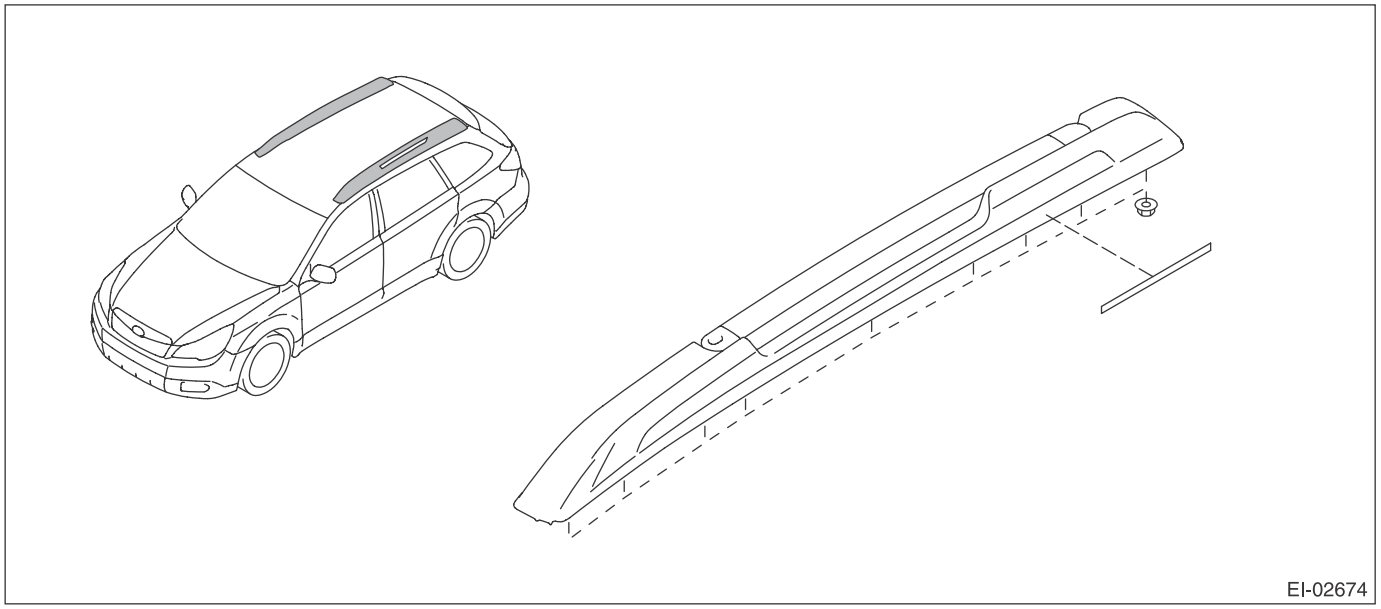

B: INSTALLATION

Install each part in the reverse order of removal.

CAUTION:
When removing or installing the roof rail, be careful not to scratch the body panel with the stud bolt of roof rail.

Tightening torque:
7.5 N·m (0.76 kgf-m, 5.5 ft-lb)

14. Door Trim

A: REMOVAL

1. FRONT DOOR

1) Disconnect the ground cable from battery.
2) Remove the gusset cover.
   (1) Attach the protective tape (a) to the door trim.
   (2) Release the clips and claws, then detach the gusset cover.

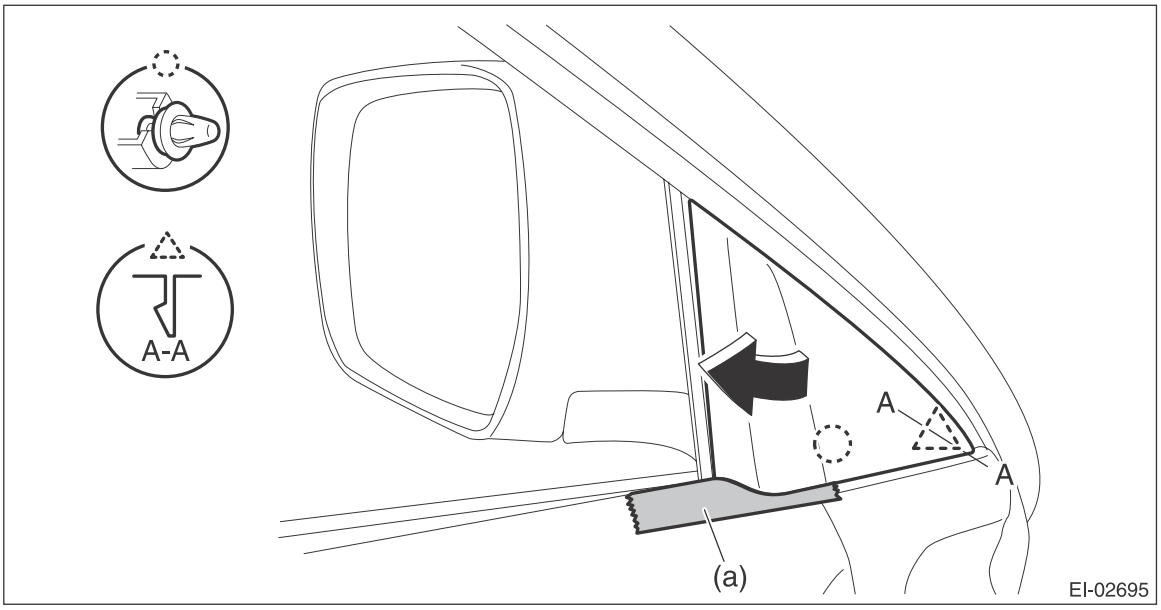

3) Remove the front door trim assembly.
   (1) Open the cover and remove the screw.
   (2) Remove the clips in the order of (A) to (J) and remove the front door trim assembly from the door panel.

CAUTION:
When removing the door trim, be sure to remove the clips in the correct order. Forcibly removing clips may damage the door panel assembly.

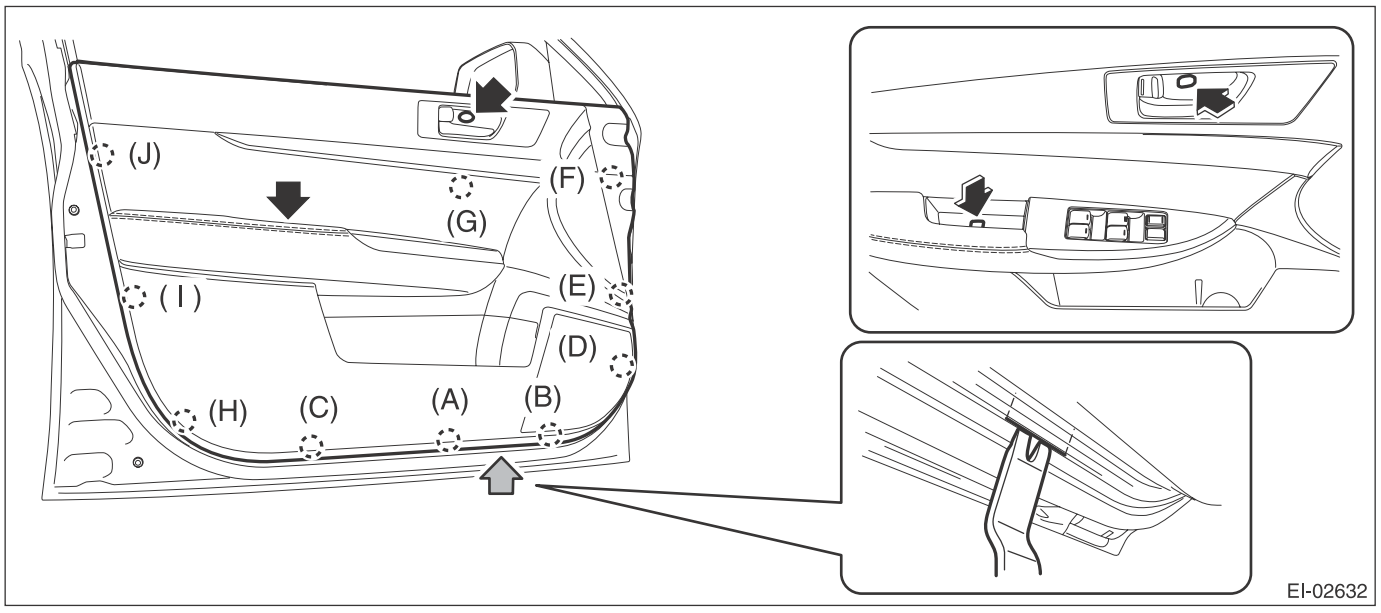

NOTE:
Insert a plastic clip remover into the slit at the bottom edge of the door trim and lift the door trim.

(3) Remove the cables (a) and (b) from the cable holder of inner remote.

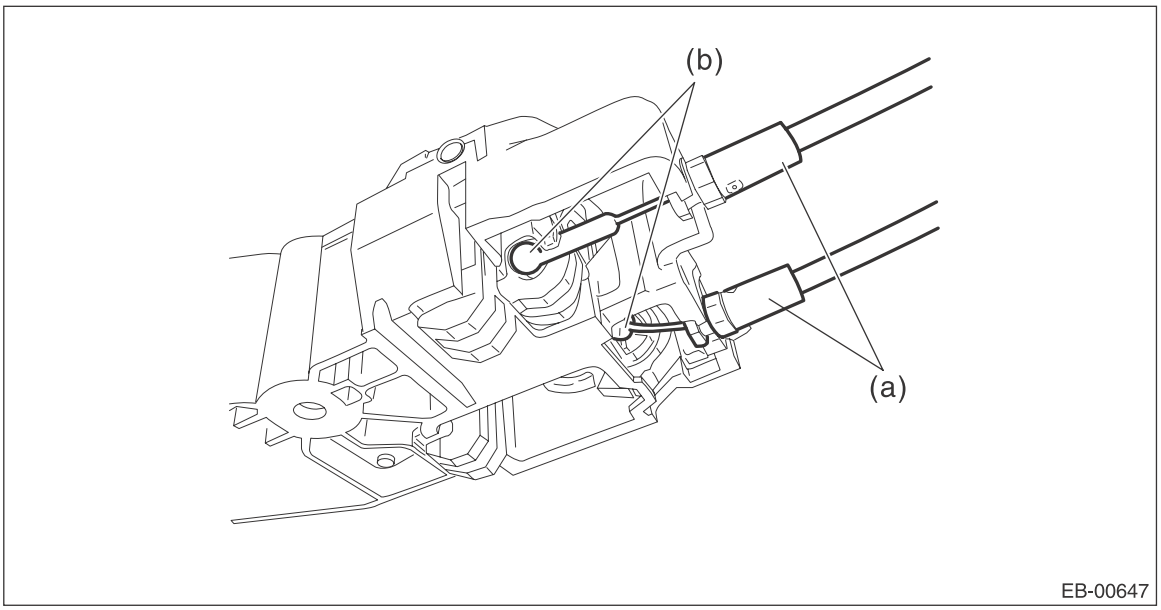

(4) Disconnect the harness connector and remove the door trim assembly.

2. REAR DOOR

1) Disconnect the ground cable from battery.
2) Remove the rear door trim assembly.
   (1) Open the cover and remove the screw.
   (2) Remove the clips in the order of (A) to (H) and remove the rear door trim assembly from the door panel.

CAUTION:
When removing the door trim, be sure to remove the clips in the correct order. Forcibly removing clips may damage the door panel assembly.

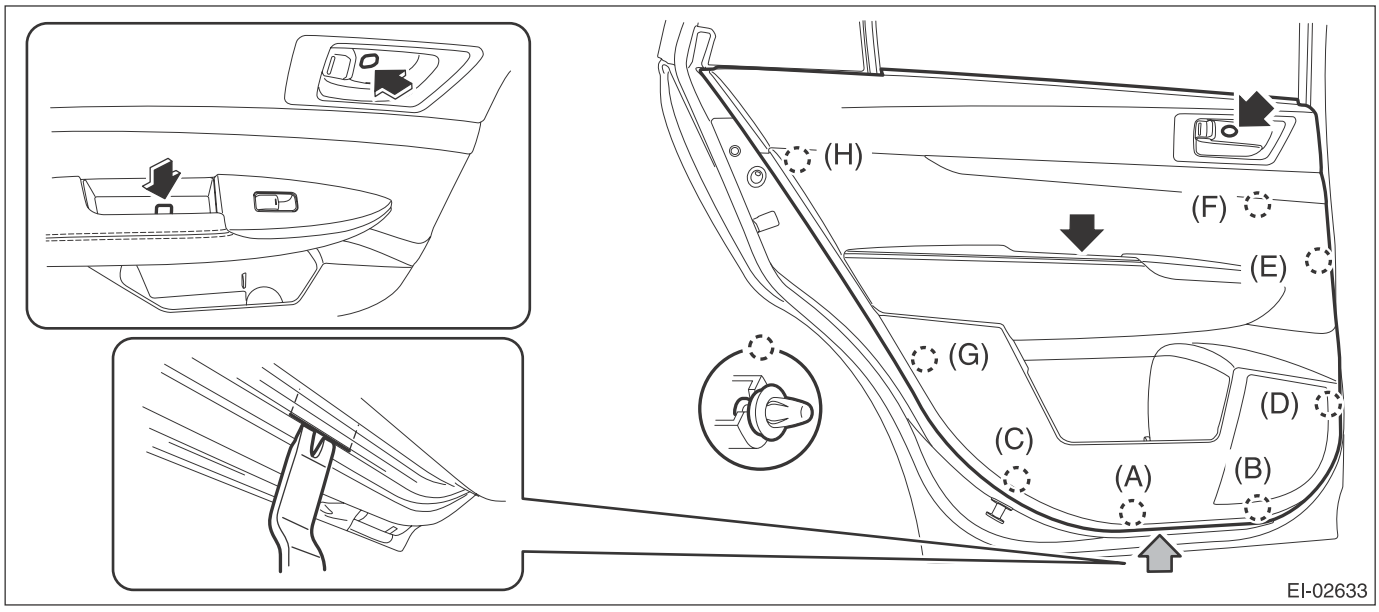

NOTE:
Insert a plastic clip remover into the slit at the bottom edge of the door trim and lift the door trim.

(3) Remove the cables (a) and (b) from the cable holder of inner remote.

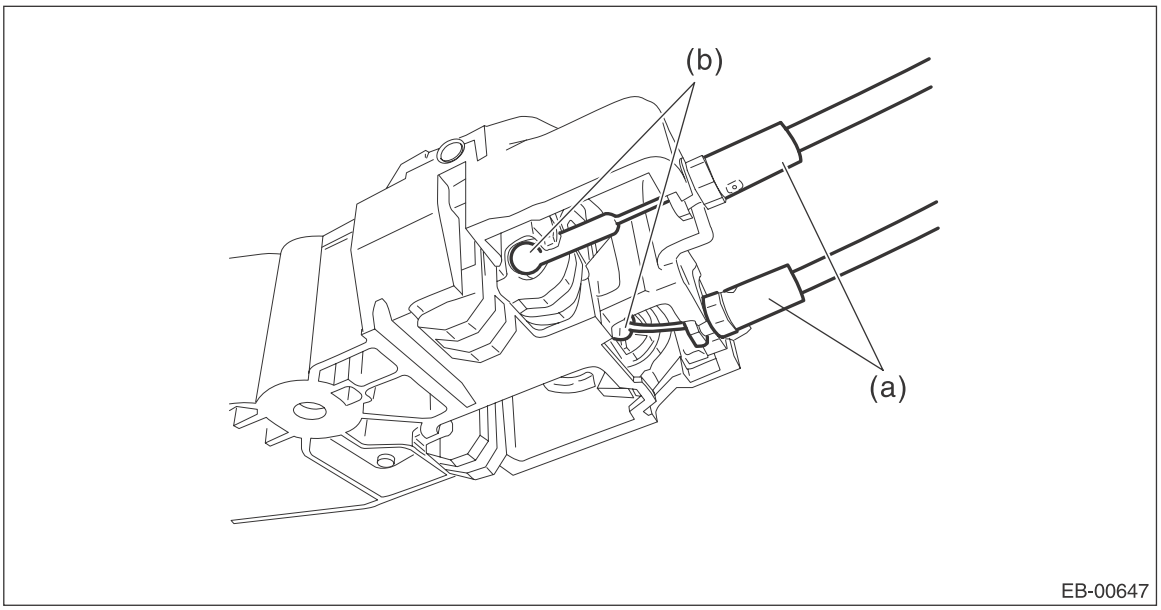

(4) Disconnect the harness connector and remove the door trim.

B: INSTALLATION

Install each part in the reverse order of removal.

15.Instrument Panel Lower Cover

A: REMOVAL

1) Disconnect the ground cable from battery.
2) Remove the clips, and remove the instrument panel side cover LH.

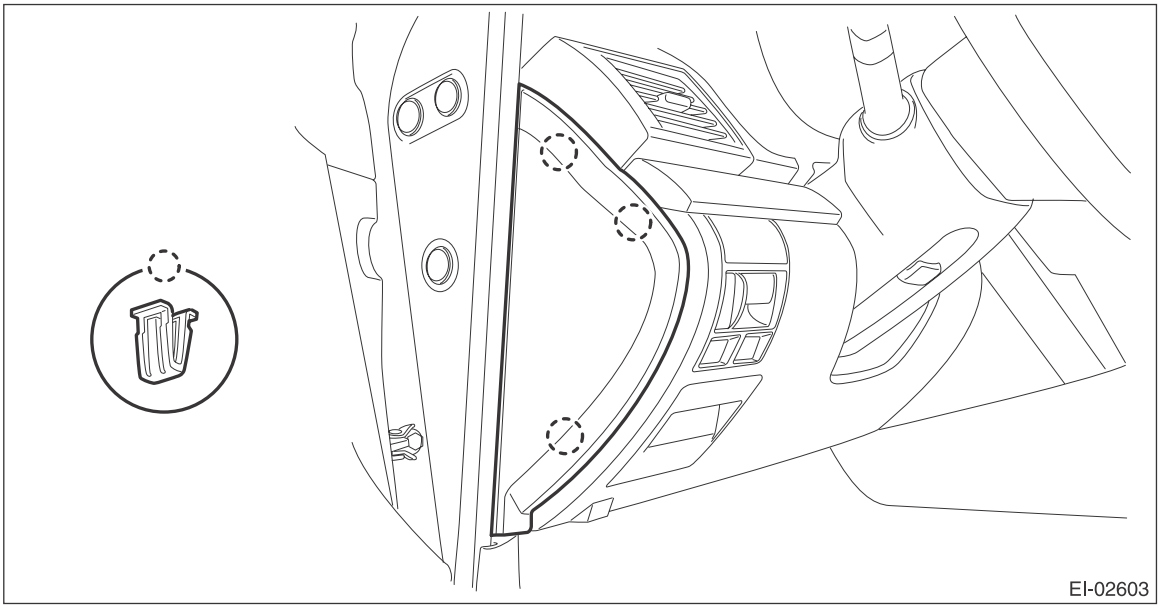

3) Remove the instrument panel lower cover.
   (1) Remove the clips and data link connector, and remove the instrument panel lower cover under.

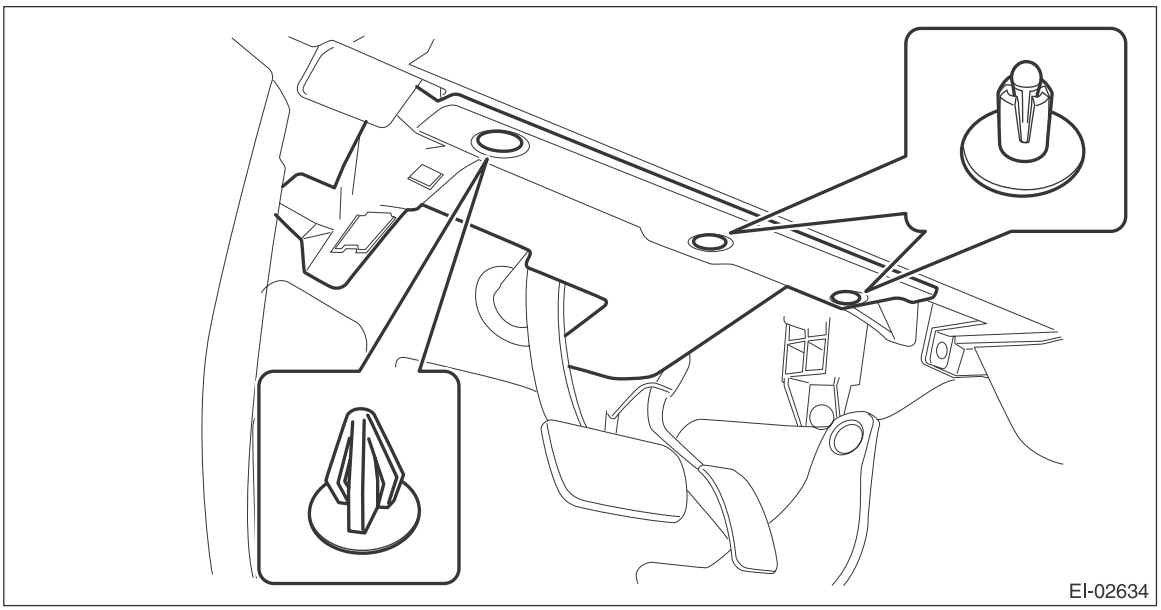

(2) Remove the screws and clips and release the claws, and remove the instrument panel lower cover while disconnecting the harness connectors.

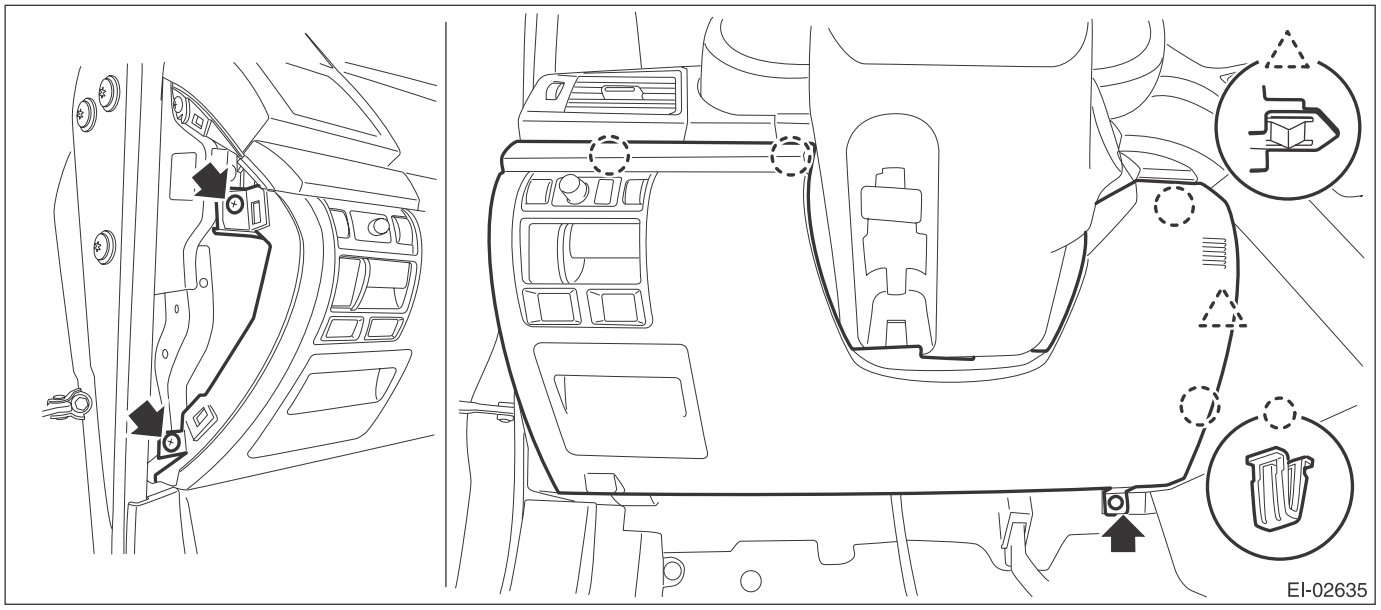

B: INSTALLATION

Install each part in the reverse order of removal.

16.Glove Box

A: REMOVAL

1) Remove the glove box lid assembly.
   (1) Remove the glove box damper.
   (2) Release the stoppers and remove the glove box lid assembly by pulling it toward you.

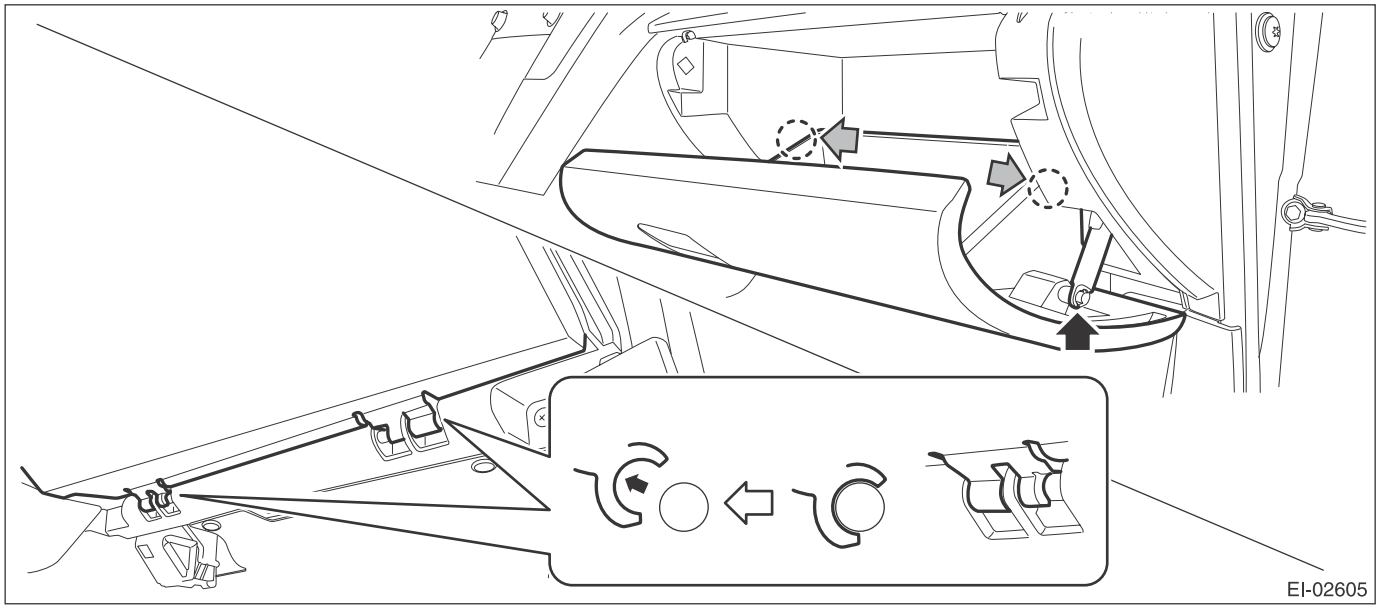

2) Release the clips, and remove the instrument panel side cover RH.

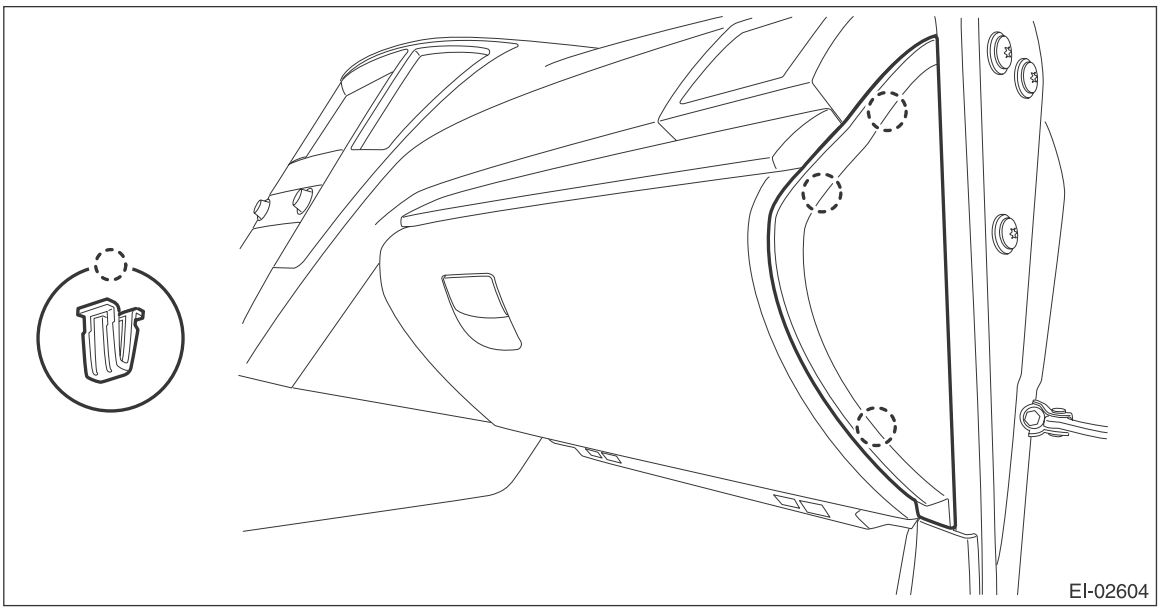

3) Remove the glove box back panel.
(1) Release the clips, and remove the glove box under cover.

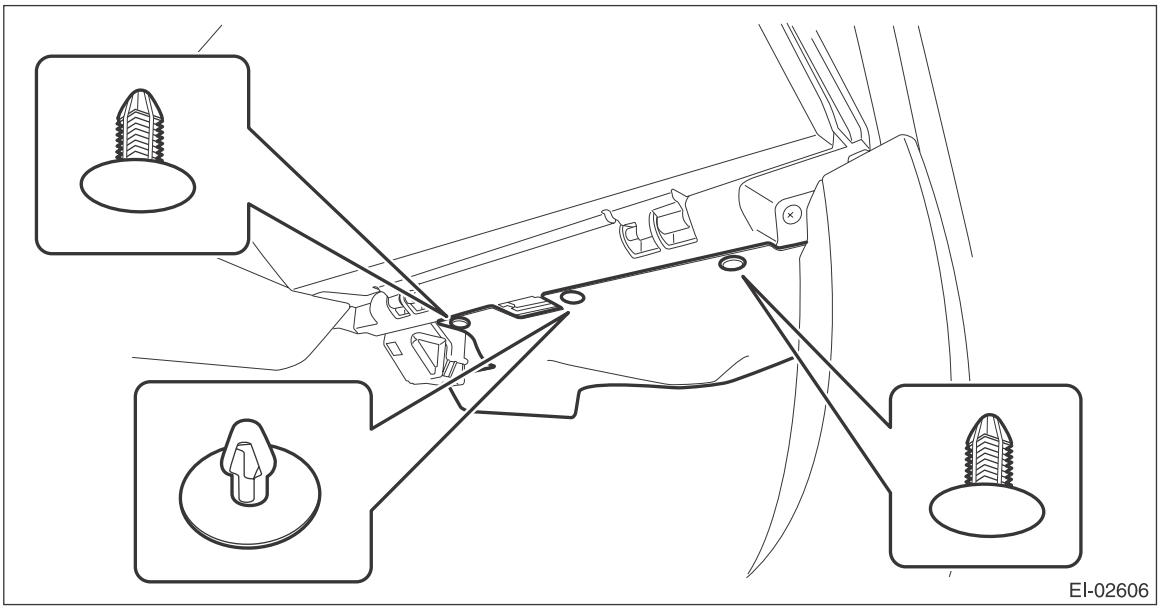

(2) Release the clips and claws, and remove the ornament panel assembly P.

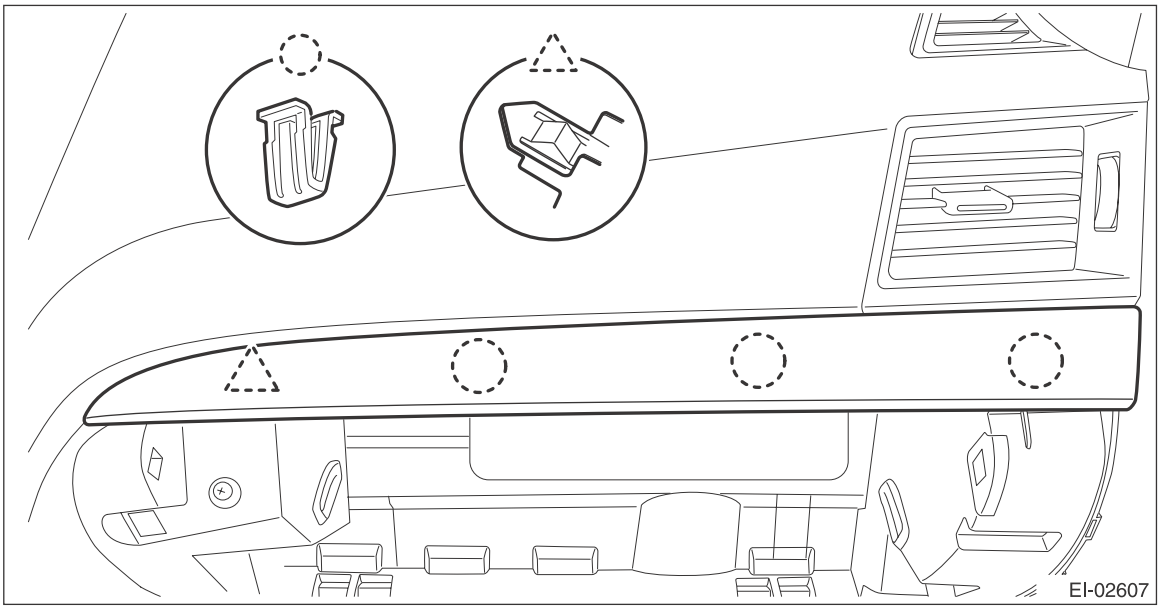

(3) Remove the screws and release the claws, then detach the glove box back panel.

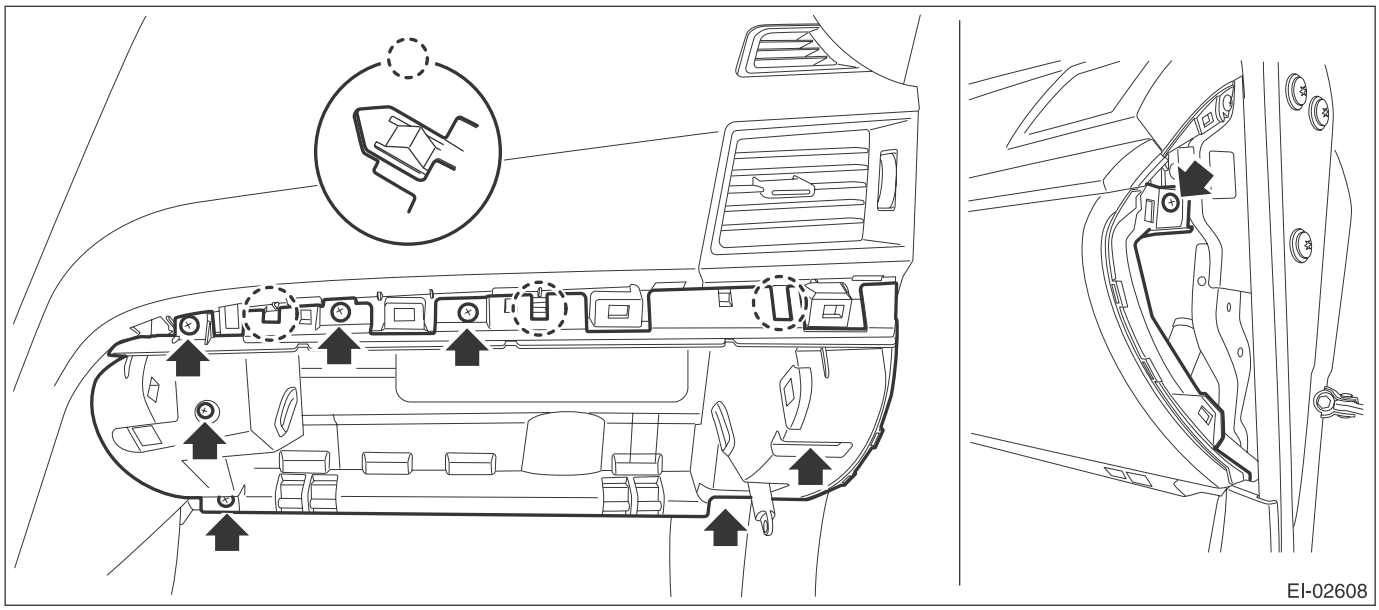

(4) Disconnect the glove box light LED connector.

B: INSTALLATION

Install each part in the reverse order of removal.

17.Center Console

A: REMOVAL

1. CENTER PANEL ASSY

1) Attach the protective tape (a) to the meter visor.
2) Remove the center panel assembly.

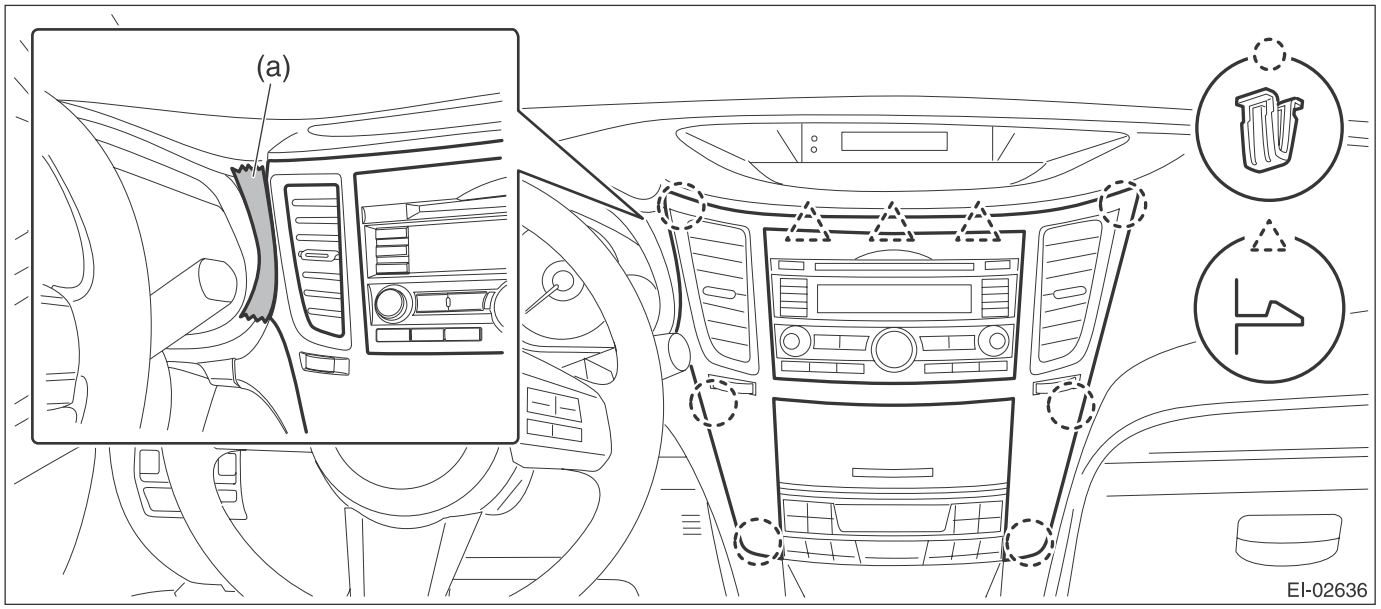

(1) Insert a finger into the air vent grille and release the left and right clips at the top of the center panel. (A), (B)

CAUTION:
Do not put your finger on the fin of the air vent grille. Doing so may damage the fin.

(2) Insert a finger into the air vent grille and release the left and right clips at the center of the center panel. (C), (D)

CAUTION:
Do not put your finger on the fin of the air vent grille. Doing so may damage the fin.

(3) Release the clips at the bottom of the center panel and remove the center panel assembly.

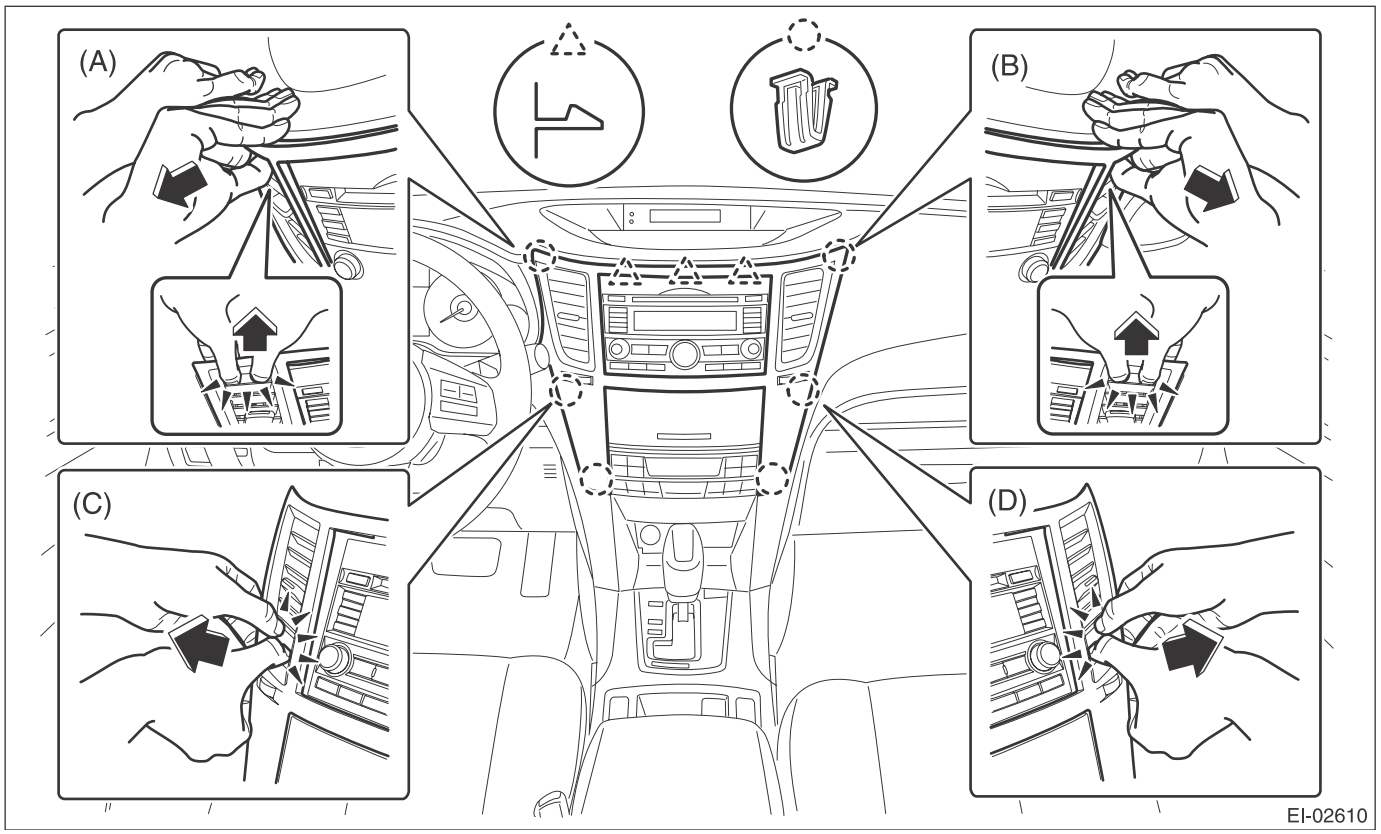

2. CONSOLE FRONT COVER

MT model

1) Remove the console front cover assembly.
(1) Remove the shift knob.

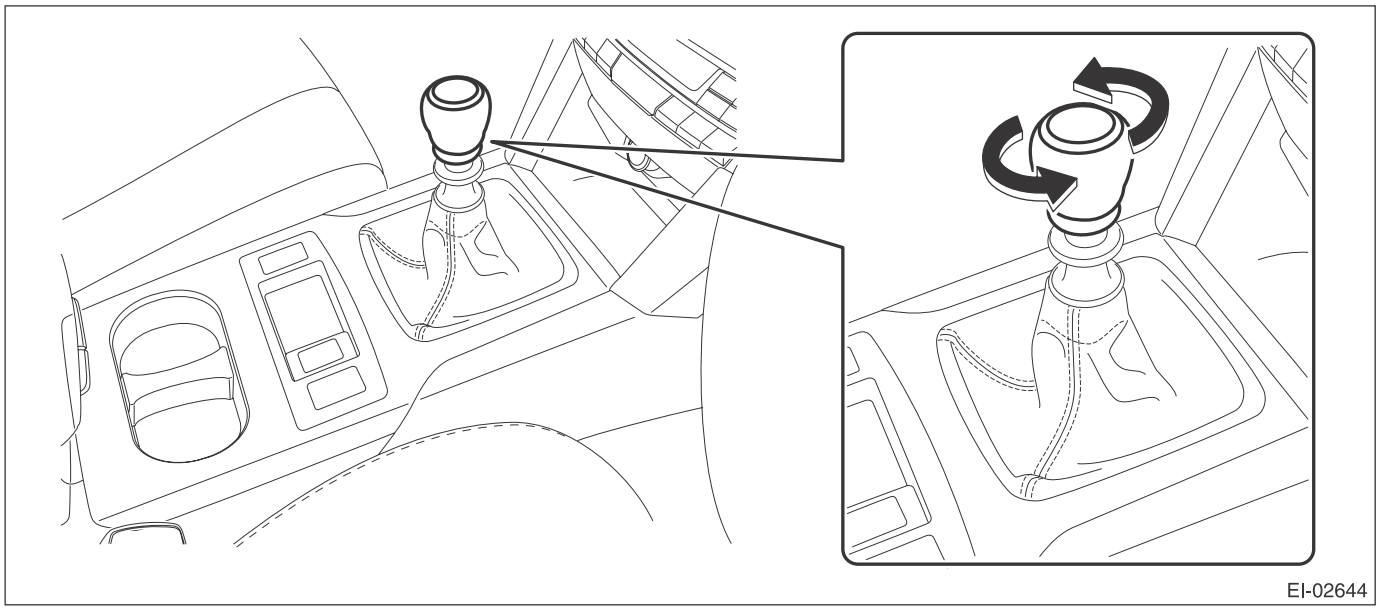

(2) Release the clips and claws, then pull up the console front cover assembly.

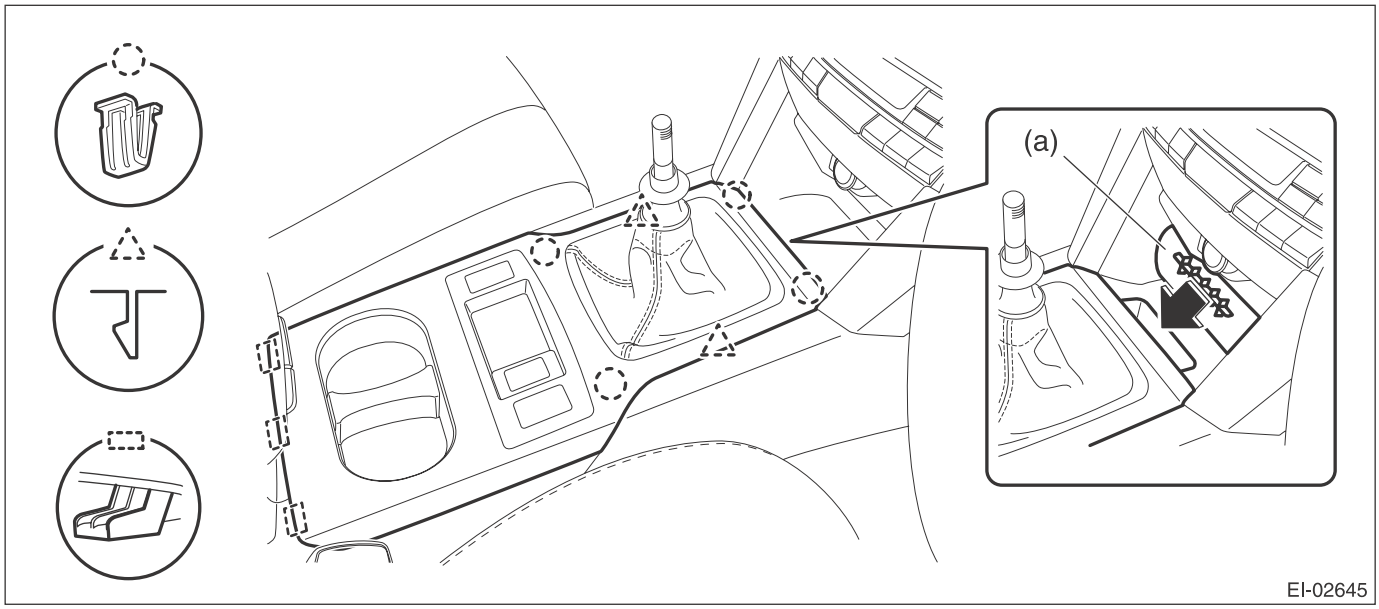

NOTE:
Turn over the front center pocket mat (a) and pull up the console front cover from the slit.

(3) Disconnect the harness connector and remove the console front cover assembly.

AT model

1) Remove the console front cover assembly.
   (1) Remove the select lever knob.
      a) Lower the cover grip AT.
      b) Remove the clamp grip pin, then remove the select lever knob.

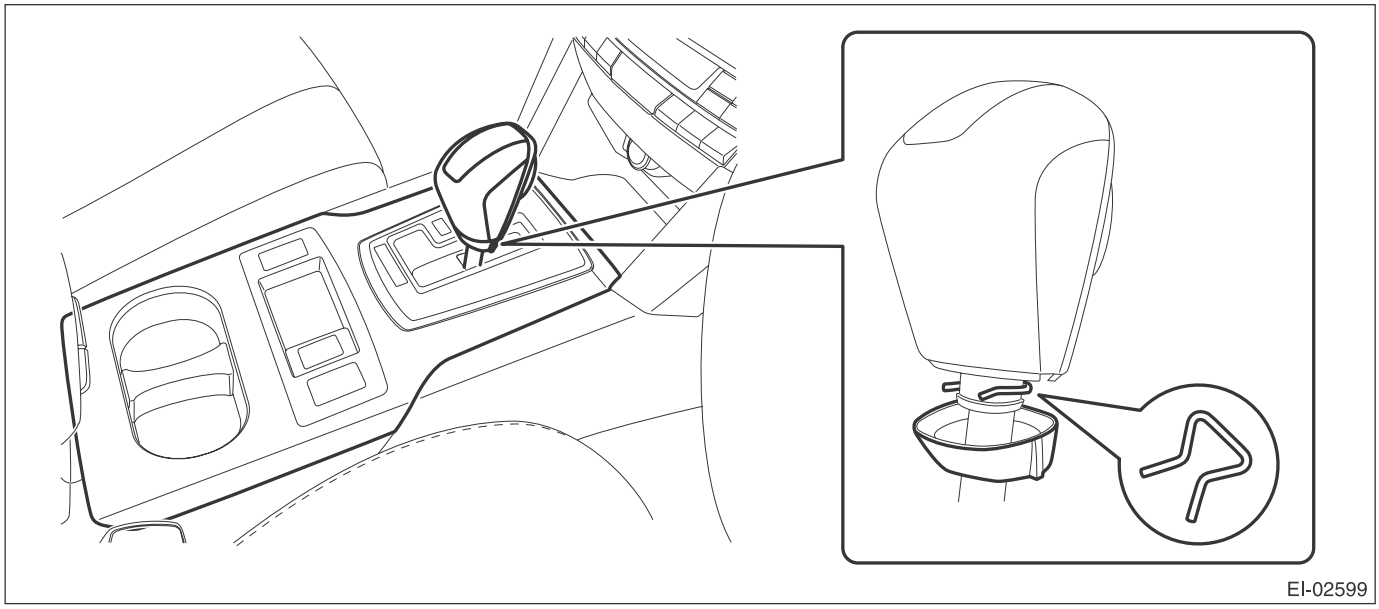

(2) Release the clips and claws, then pull up the console front cover assembly.

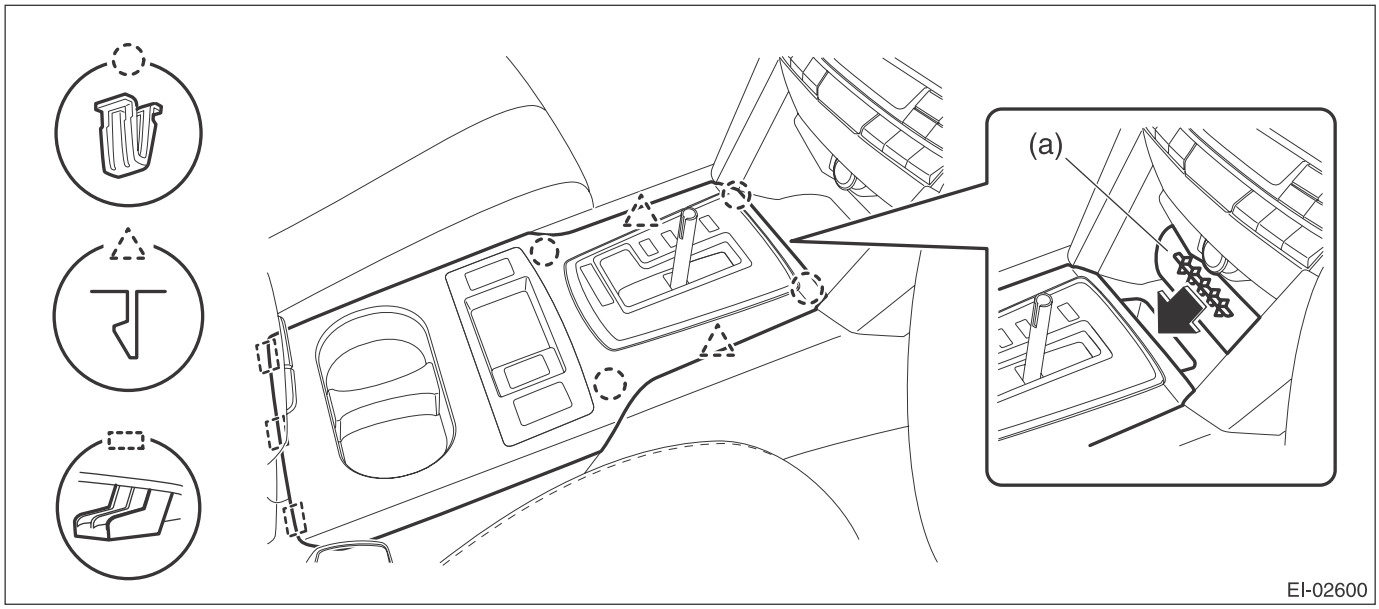

NOTE:
Turn over the front center pocket mat (a) and pull up the console front cover from the slit.

(3) Disconnect the harness connector and remove the console front cover assembly.

B: INSTALLATION

Install each part in the reverse order of removal.

18.Console Box

A: REMOVAL

1) Remove the console front cover assembly.

- MT model
  1. Remove the shift knob.
  2. Release the clips and claws, then pull up the console front cover assembly.

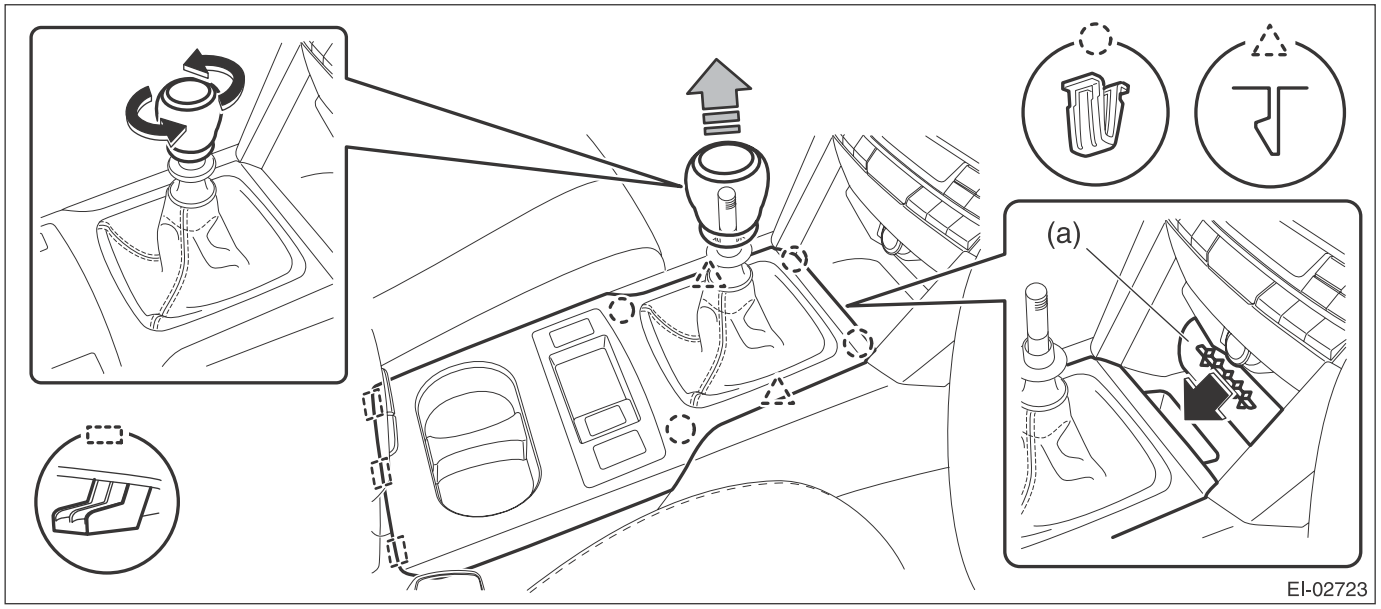

NOTE:
Turn over the front center pocket mat (a) and pull up the console front cover from the slit.

  3. Disconnect the harness connector and remove the console front cover assembly.

- AT model
  1. Remove the select lever knob.
     a. Lower the cover grip AT.
     b. Remove the clamp grip pin, then remove the select lever knob.
  2. Release the clips and claws, then pull up the console front cover assembly.

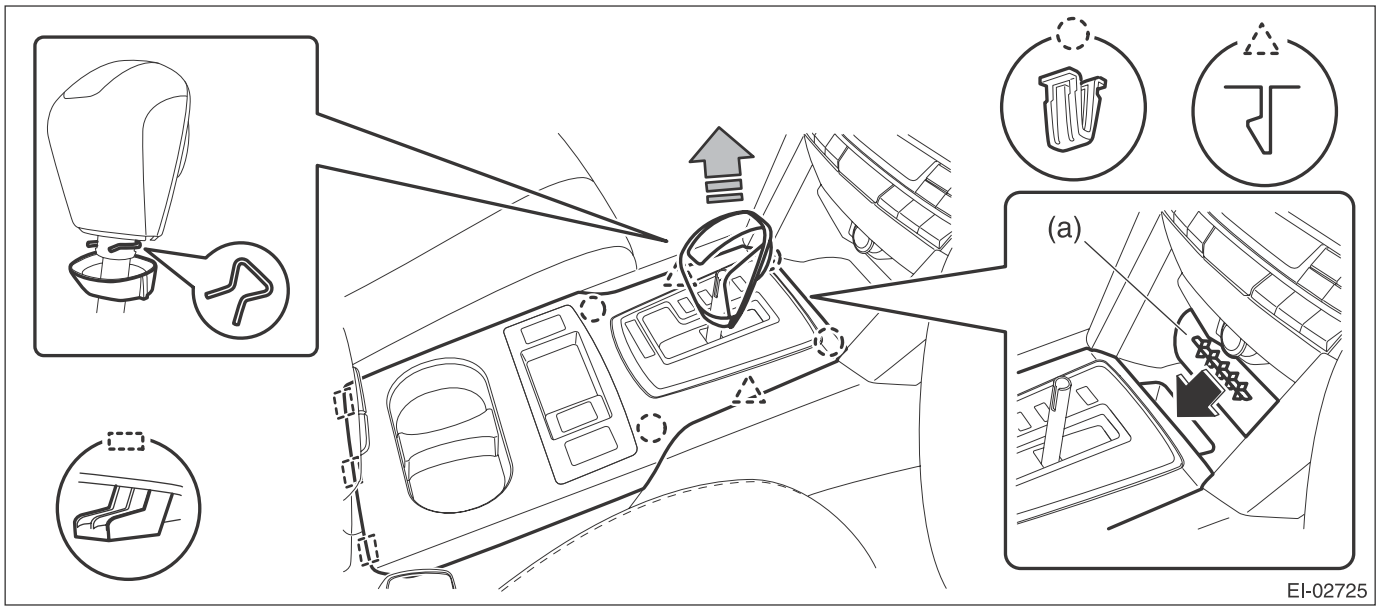

NOTE:
Turn over the front center pocket mat (a) and pull up the console front cover from the slit.

3. Disconnect the harness connector and remove the console front cover assembly.

2) Remove the left and right console front side cover assembly.
(1) Remove the screws and release the clip engagings (A) to (D) in order.
(2) Remove the console front side cover assembly by pulling it up.

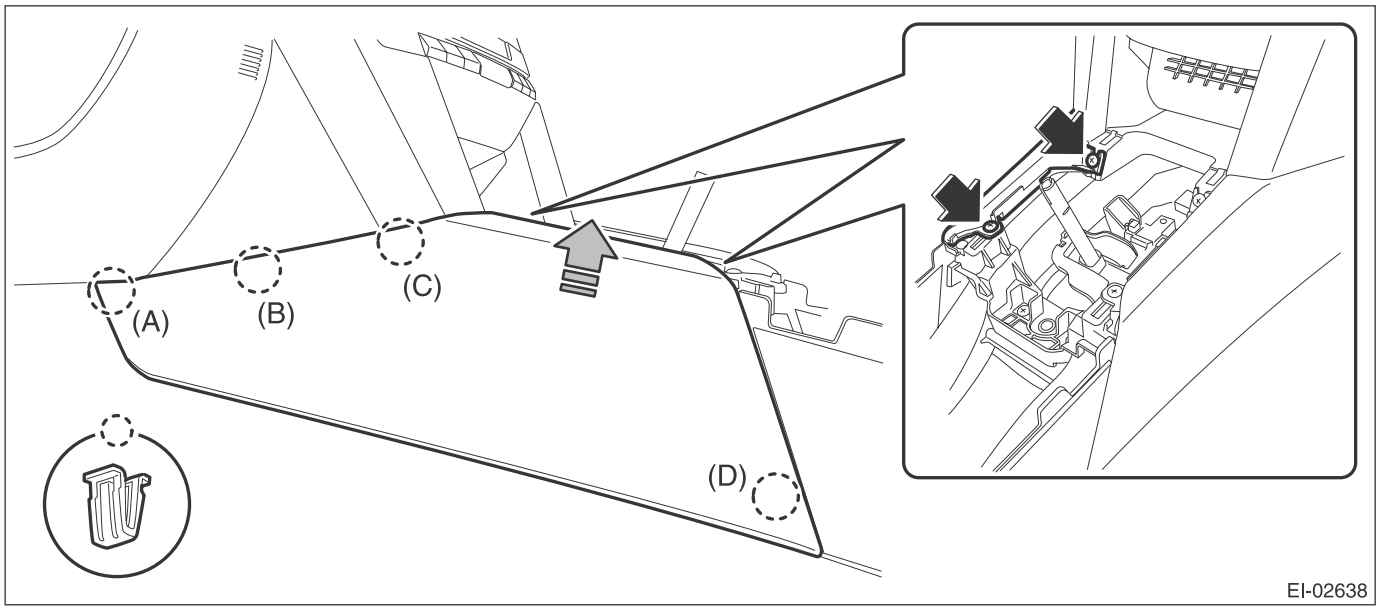

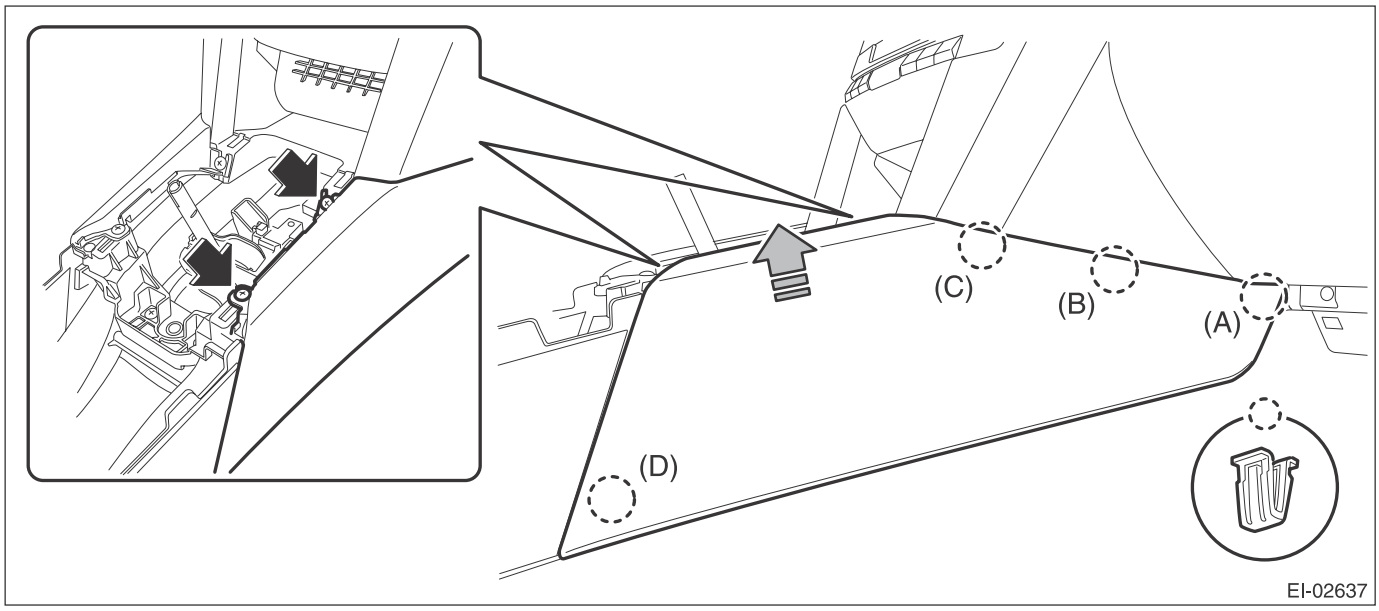

3) Remove the console box assembly.
(1) Move the seat forward, and remove the bolts after detaching the left and right caps.

NOTE:
For a model with power seat, connect the battery ground cable and move the seat. Then, disconnect the battery ground cable again and wait for 60 seconds at least before restarting the work.

(2) Remove the screws, disconnect the harness connector and remove the console box assembly.

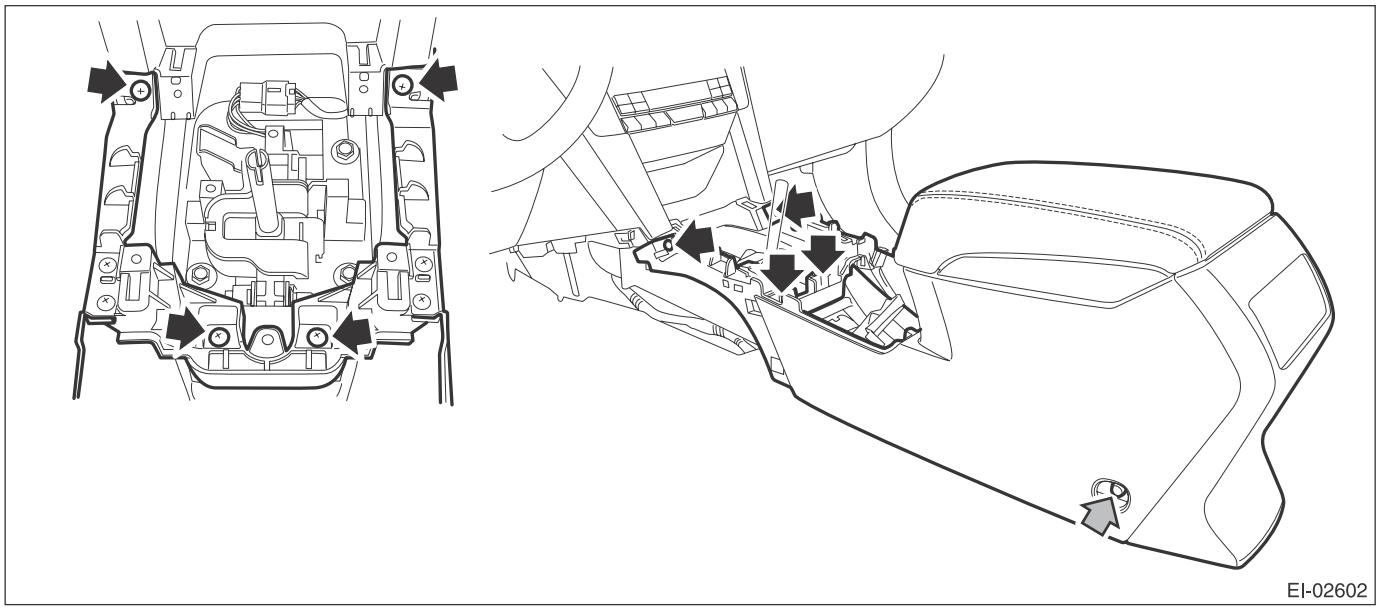

B: INSTALLATION

Install each part in the reverse order of removal.

Tightening torque:
6.5 N·m (0.66 kgf-m, 4.8 ft-lb)

19.Instrument Panel Assembly

A: REMOVAL

CAUTION:
Be careful not to damage the airbag system harness when servicing the instrument panel. Damage may cause the system to malfunction.

1) Disconnect the ground cable from battery.
2) Remove the console front cover assembly.

- MT model
  1. Remove the shift knob.
  2. Release the clips and claws, then pull up the console front cover assembly.

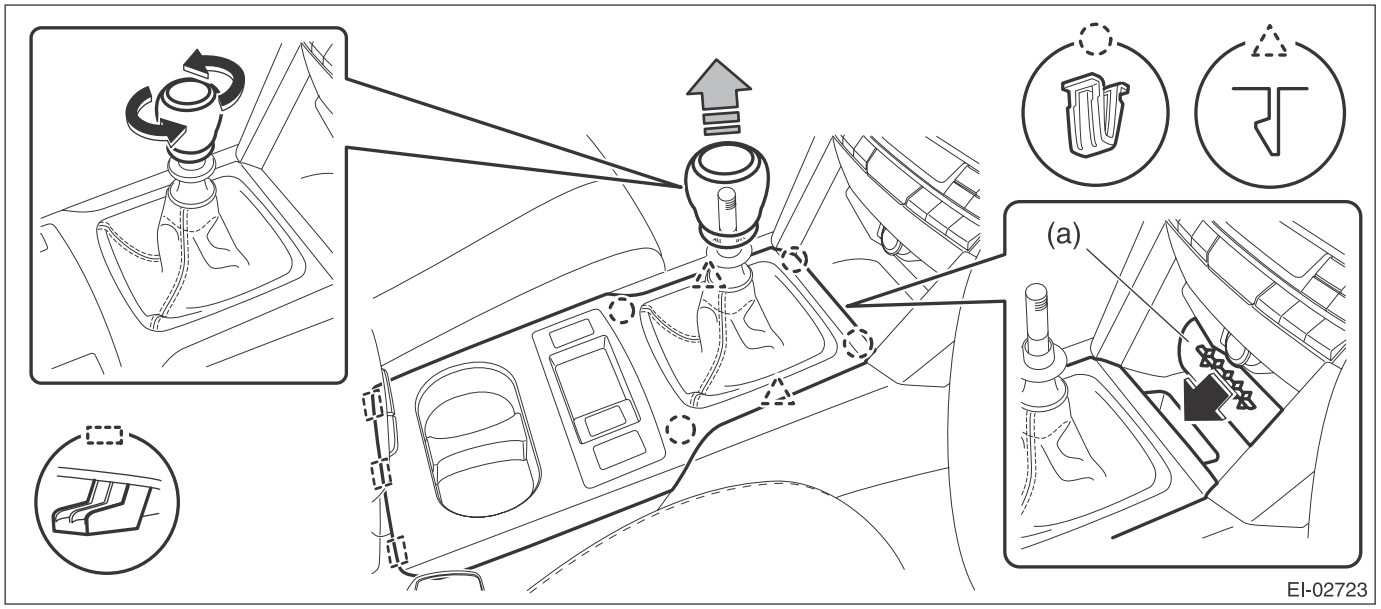

NOTE:
Turn over the front center pocket mat (a) and pull up the console front cover from the slit.

  3. Disconnect the harness connector and remove the console front cover assembly.

- AT model
  1. Remove the select lever knob.
     a. Lower the cover grip AT.
     b. Remove the clamp grip pin, then remove the select lever knob.

2. Release the clips and claws, then pull up the console front cover assembly.

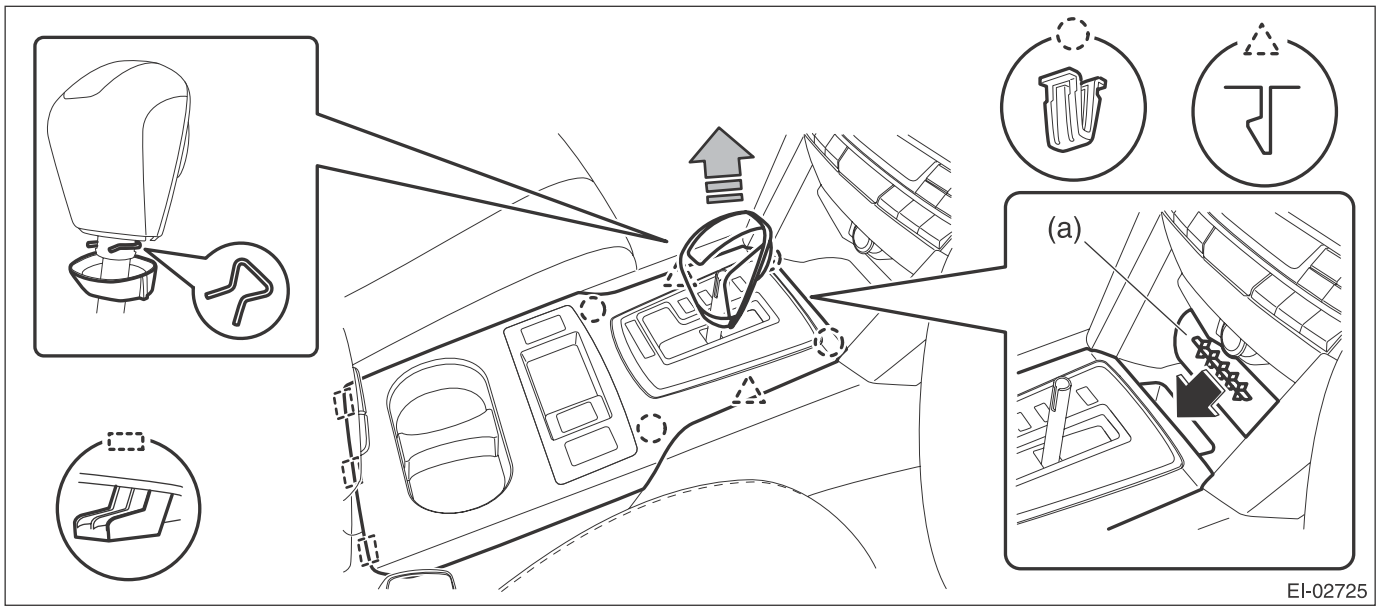

NOTE:
Turn over the front center pocket mat (a) and pull up the console front cover from the slit.

3. Disconnect the harness connector and remove the console front cover assembly.

3) Remove the left and right console front side cover assembly.
(1) Remove the screws and release the clips (A) to (D) in order.
(2) Remove the console front side cover assembly by pulling it up.

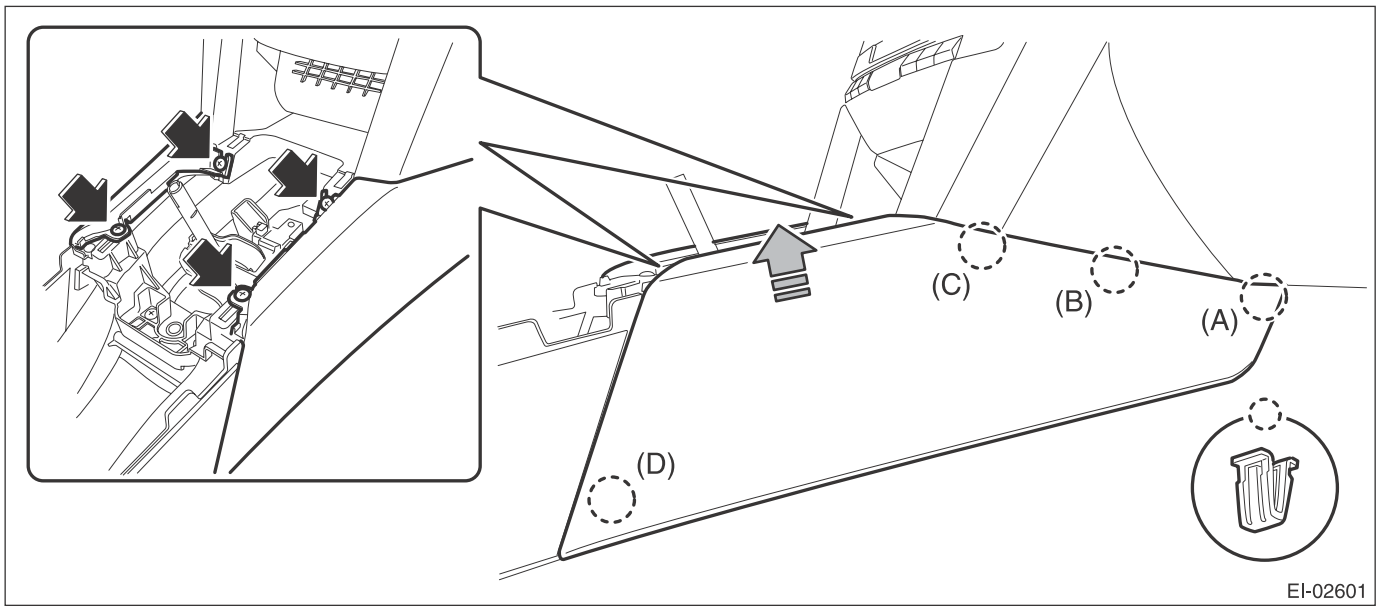

4) Remove the console box assembly.
(1) Move the seat forward, and remove the bolts after detaching the left and right caps.

NOTE:
For a model with power seat, connect the battery ground cable and move the seat. Then, disconnect the battery ground cable again and wait for 60 seconds at least before restarting the work.

(2) Remove the screws, disconnect the harness connector and remove the console box assembly.

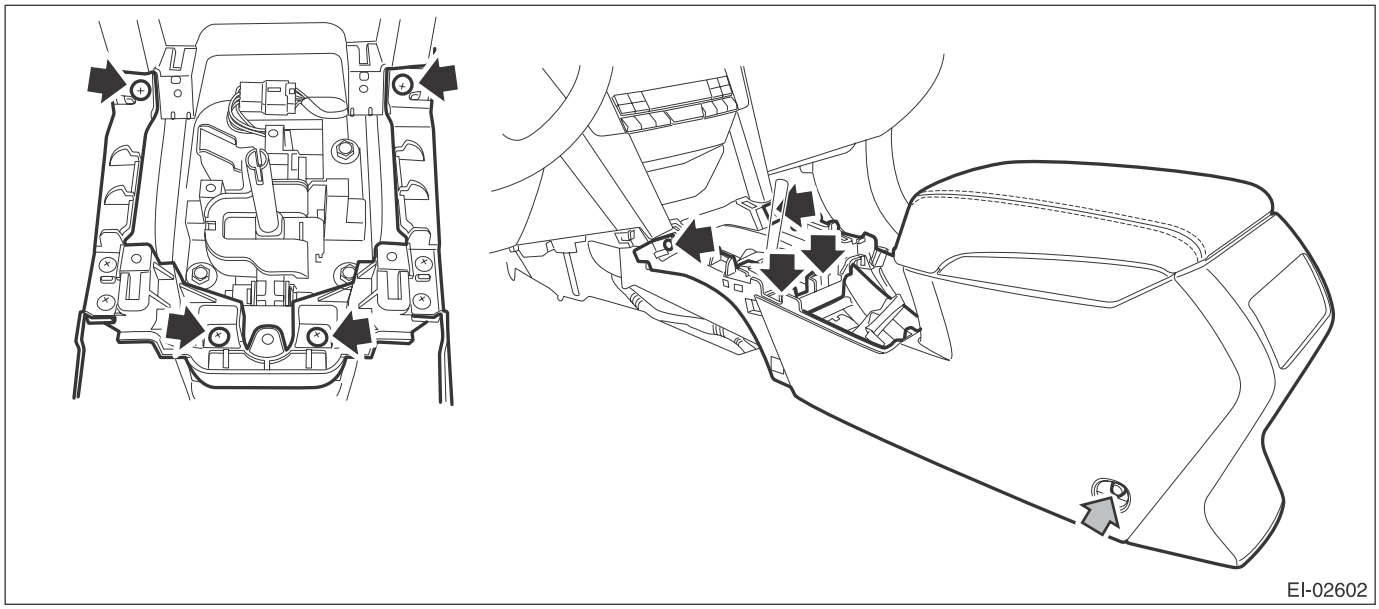

5) Remove the clips, and remove the instrument panel side cover LH.

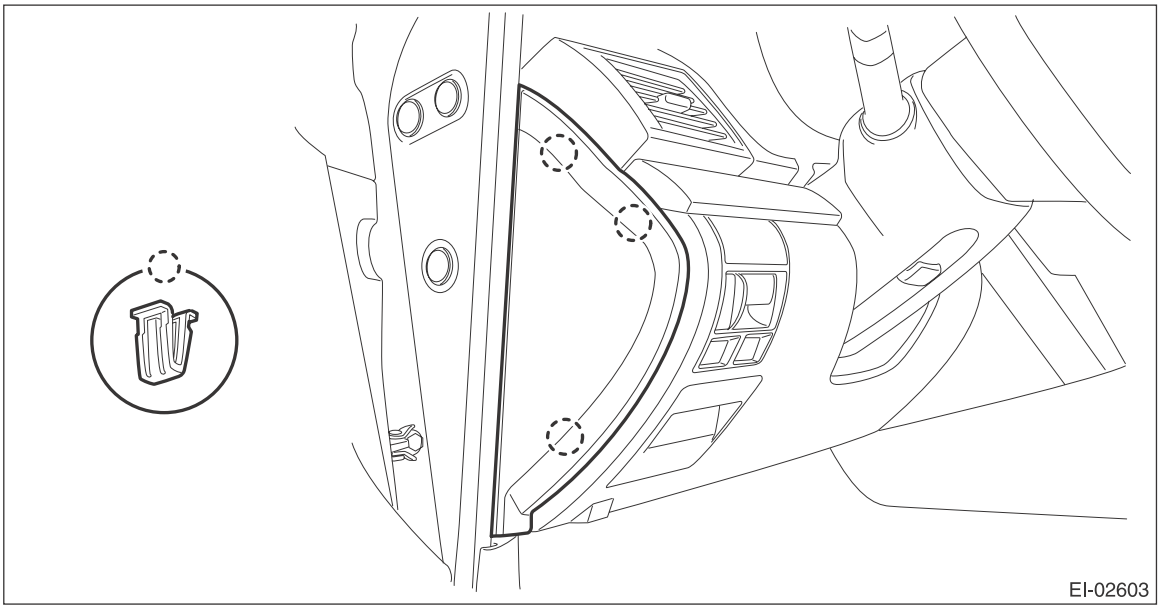

6) Remove the instrument panel lower cover.
(1) Remove the clips and data link connector, and remove the instrument panel lower cover under.

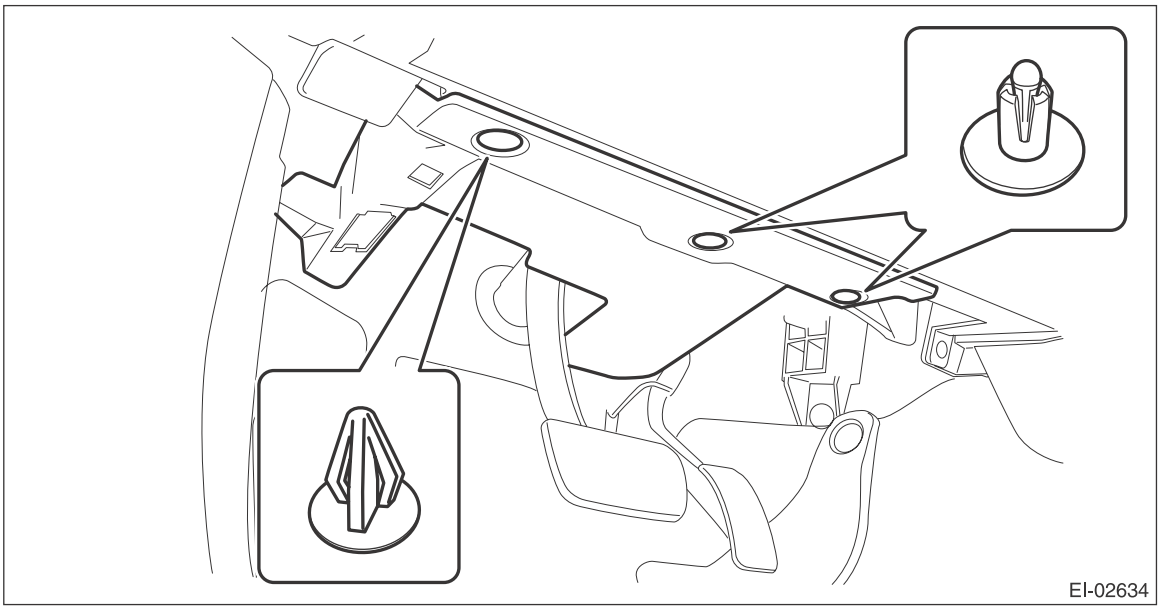

(2) Remove the screws and clips and release the claws, and remove the instrument panel lower cover while disconnecting the harness connectors.

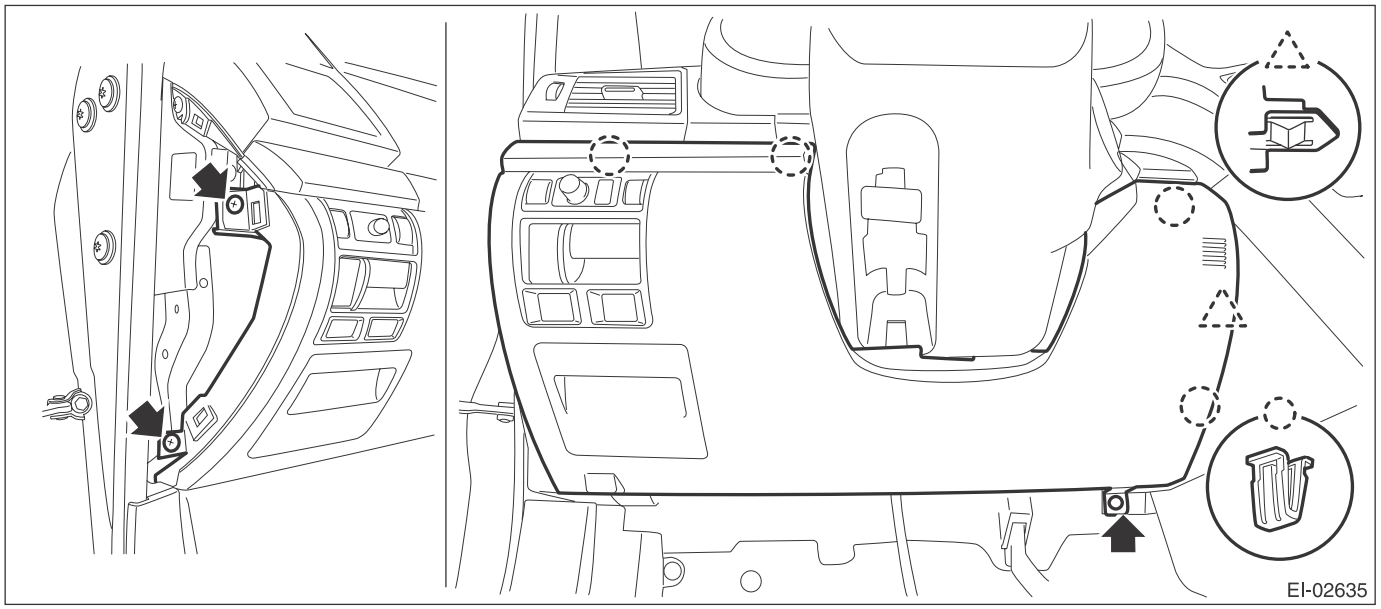

7) Remove the center panel assembly.

CAUTION:
Do not put your finger on the fin of the air vent grille. Doing so may damage the fin.

(1) Attach the protective tape (a) to the meter visor.

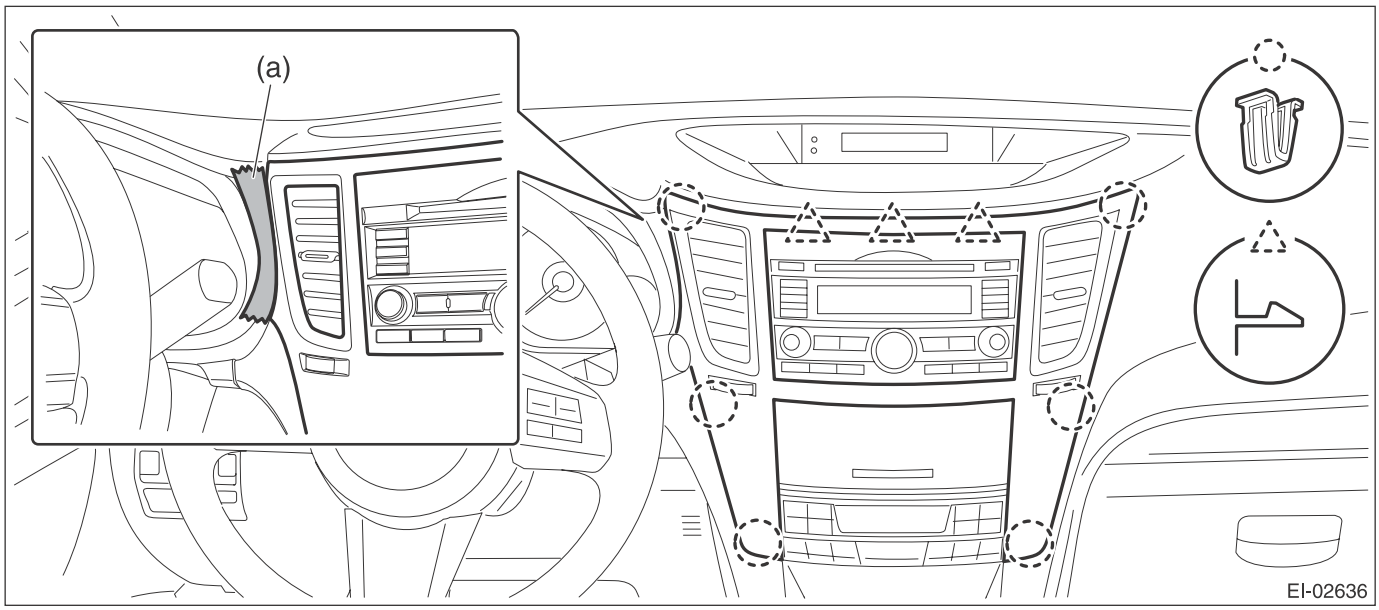

(2) Insert a finger into the air vent grille and release the left and right clips at the top of the center panel. (A), (B)
(3) Insert a finger into the air vent grille and release the left and right clips at the center of the center panel. (C), (D)
(4) Release the clips at the bottom of the center panel and remove the center panel assembly.

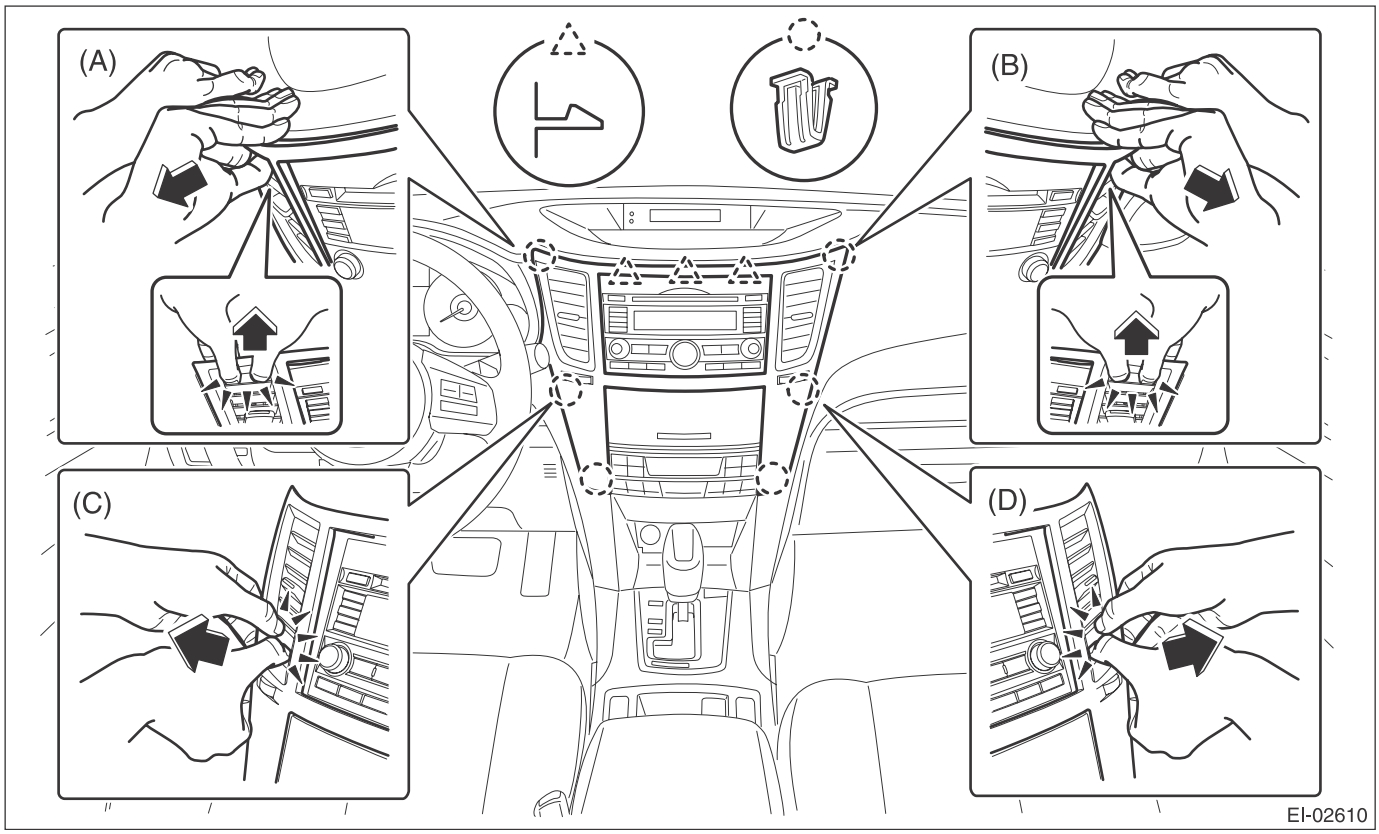

8) Remove the combination meter assembly.

CAUTION:
- **Be careful not to damage the meter or instrument panel.**
- **Pay particular attention to avoid damaging the meter glass.**

(1) Remove the screws and release the claws, then detach the starter cover assembly.

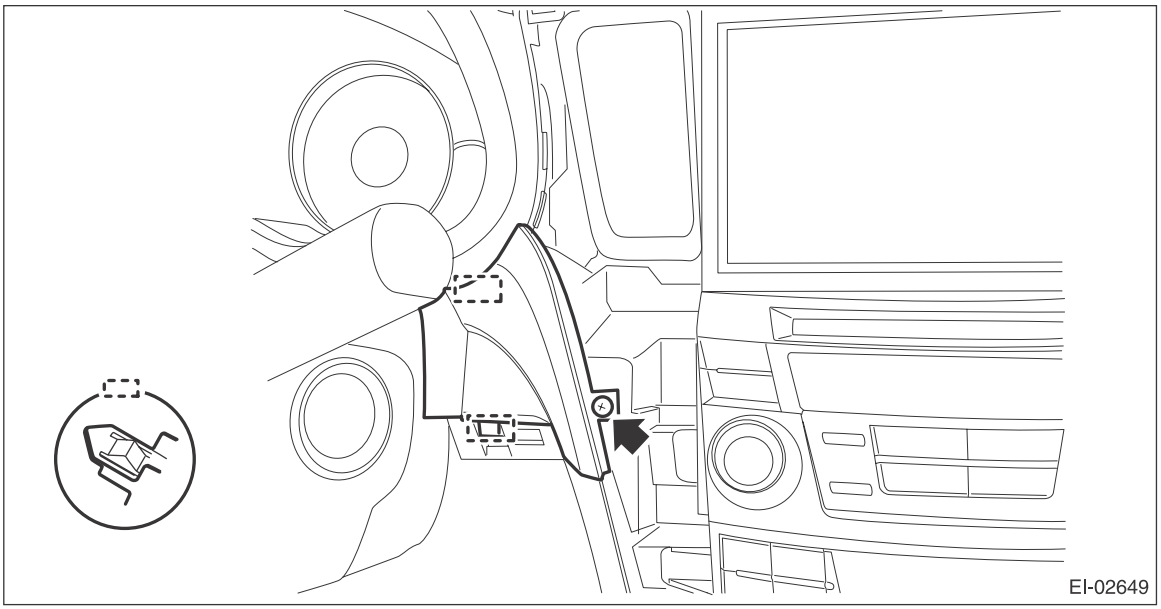

(2) Release the lock, tilt the steering column to the lowest end and fully extend the column by the telescopic system.

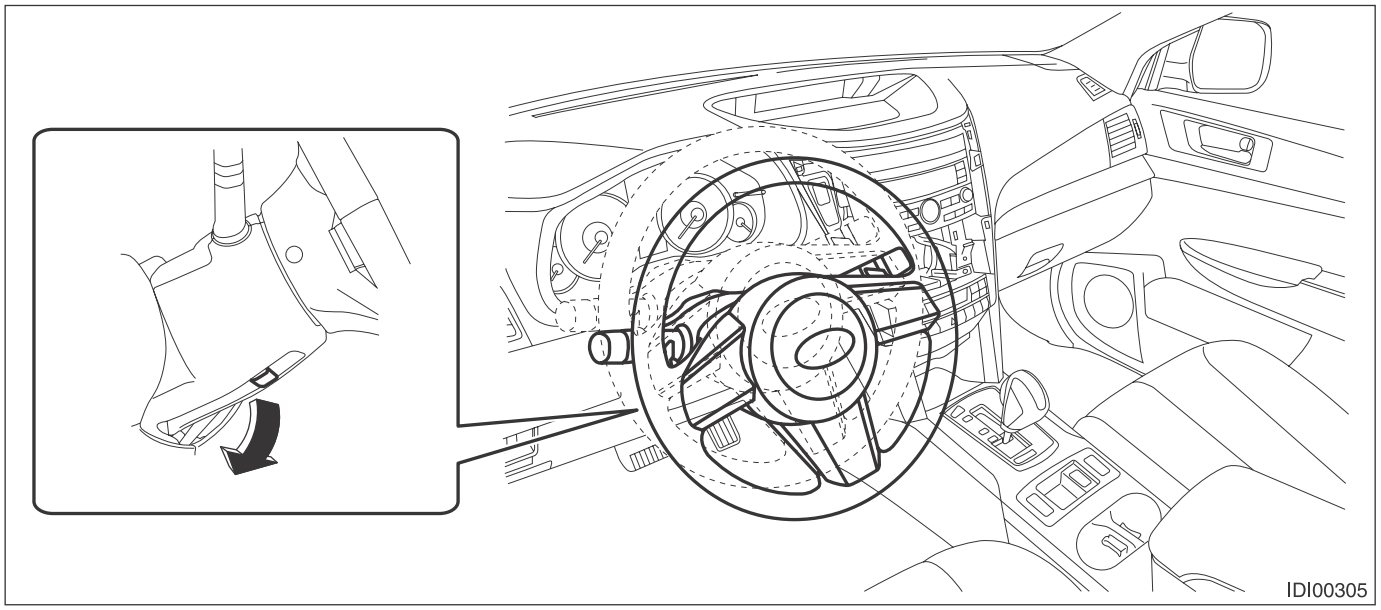

(3) Release the screws and clips, then detach the meter visor assembly.

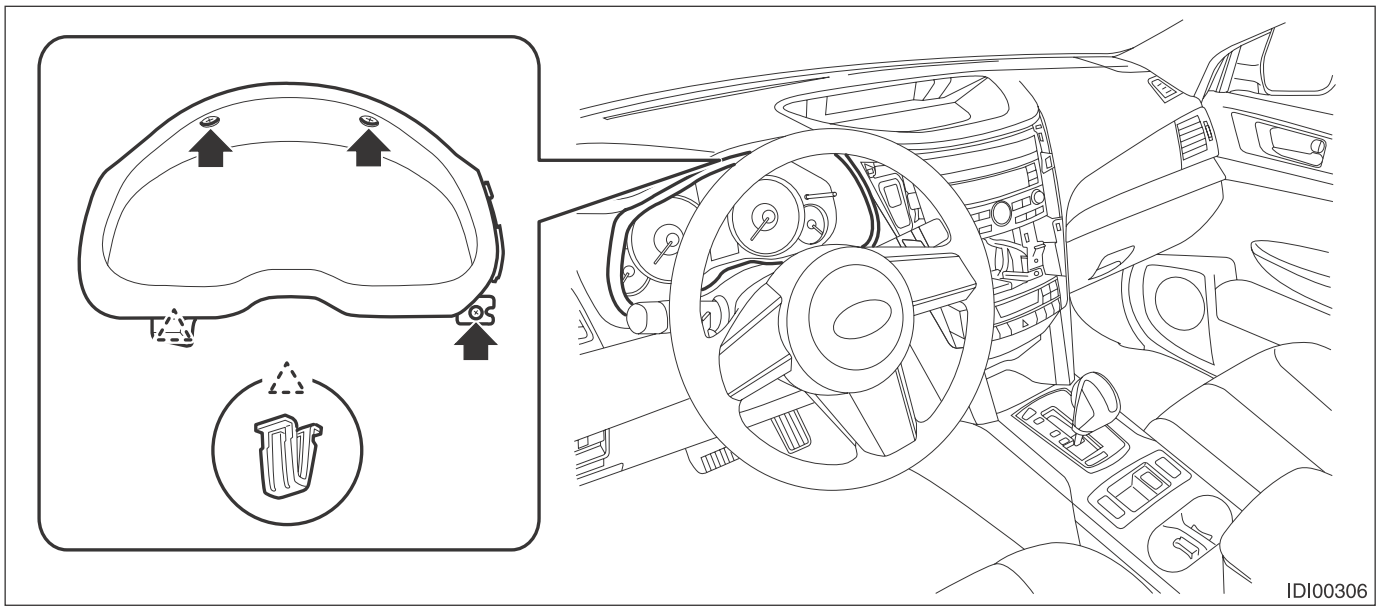

(4) Remove the screws and pull the steering COMPL upper cover toward you.

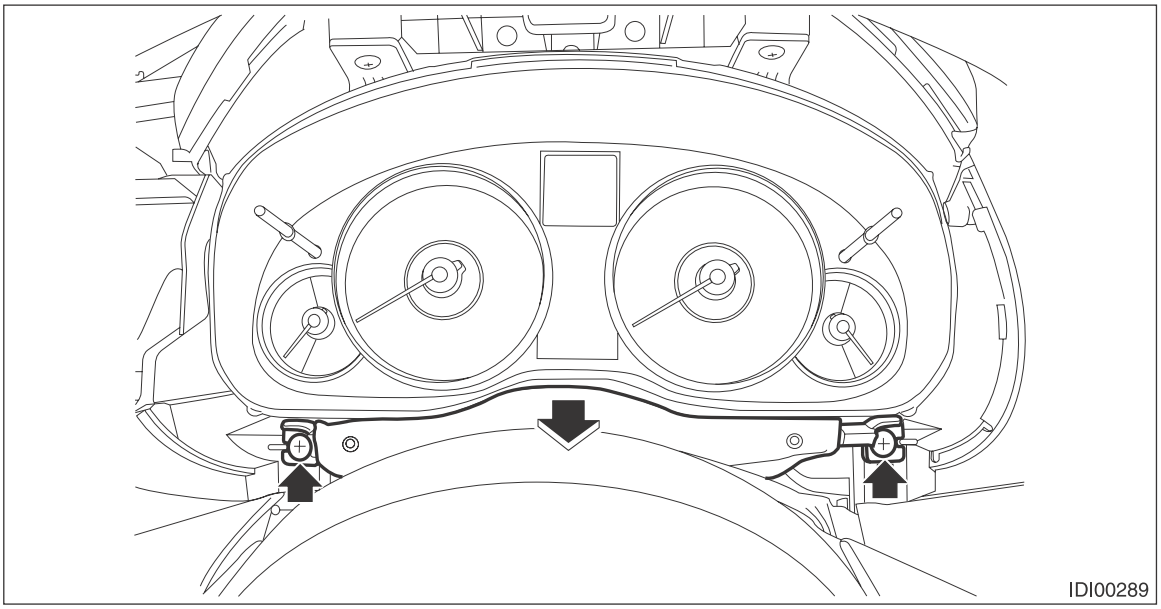

(5) Remove the four screws and pull out the combination meter toward you to disconnect the connectors.

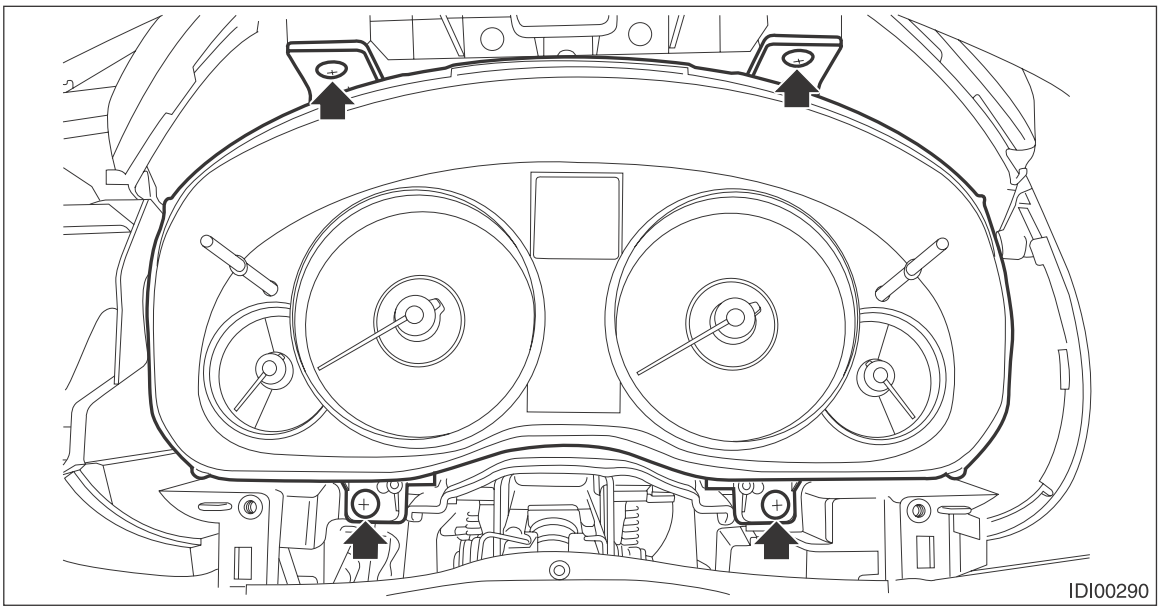

(6) Remove the combination meter assembly as shown in the figure.

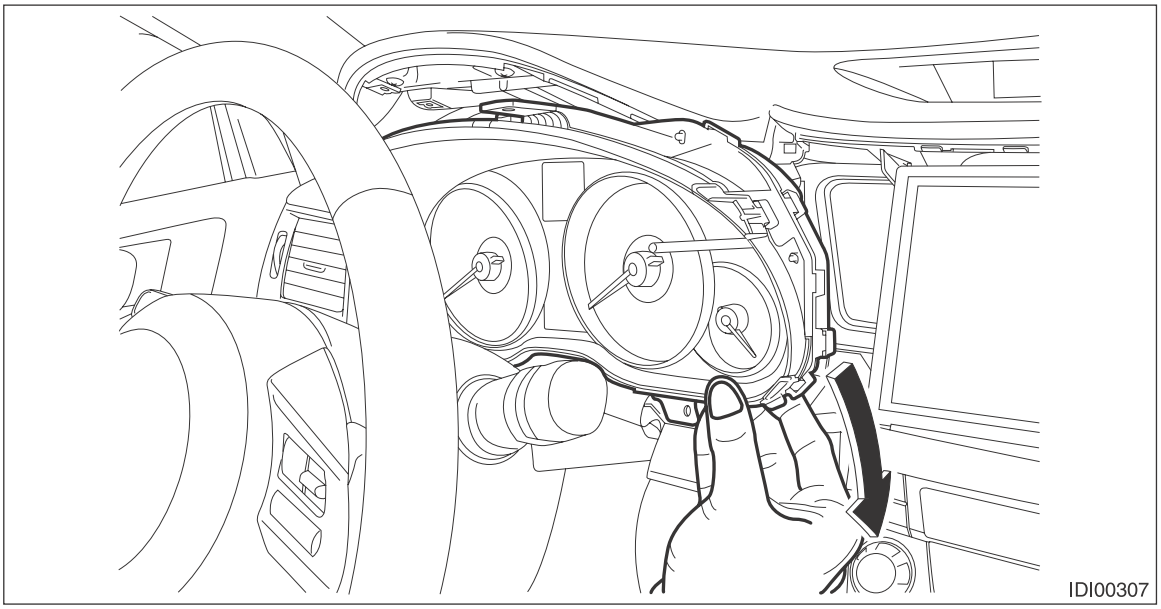

9) Remove the audio assembly.
(1) Remove the left and right screws, and partially pull the audio out from center console.

(2) Disconnect the connectors, and remove the audio assembly.

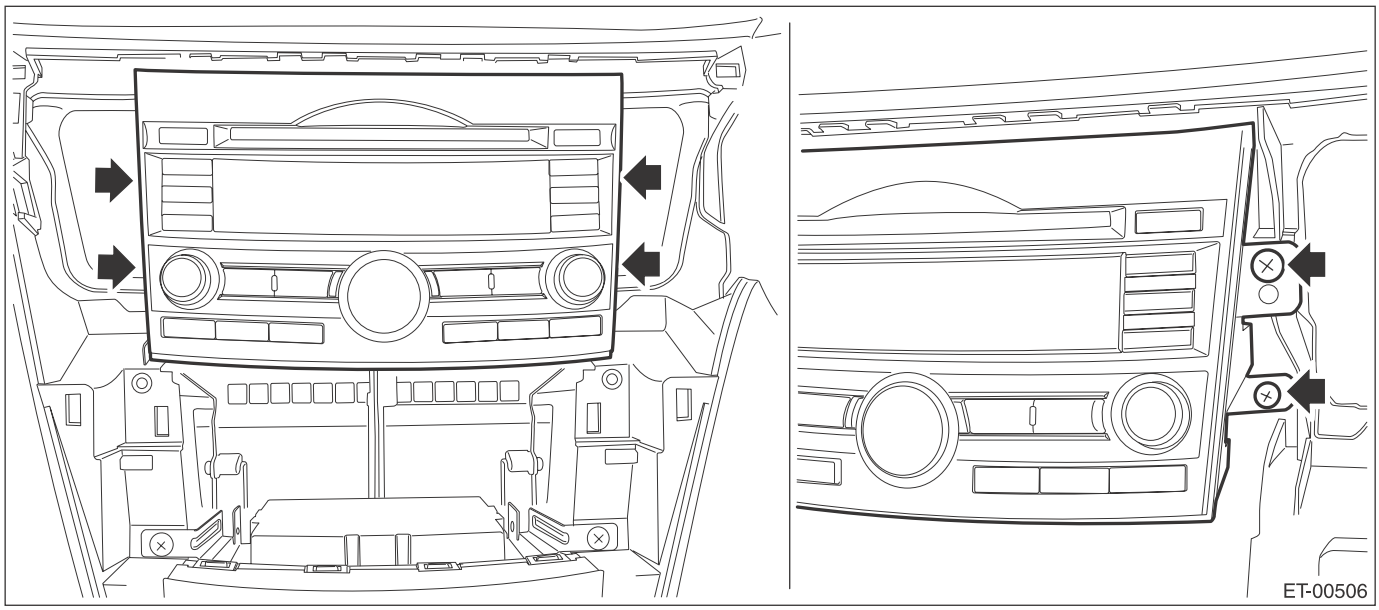

10) Remove the navigation assembly. (model with navigation)
(1) Remove the left and right screws.
(2) Disconnect the connectors, and remove the navigation assembly.

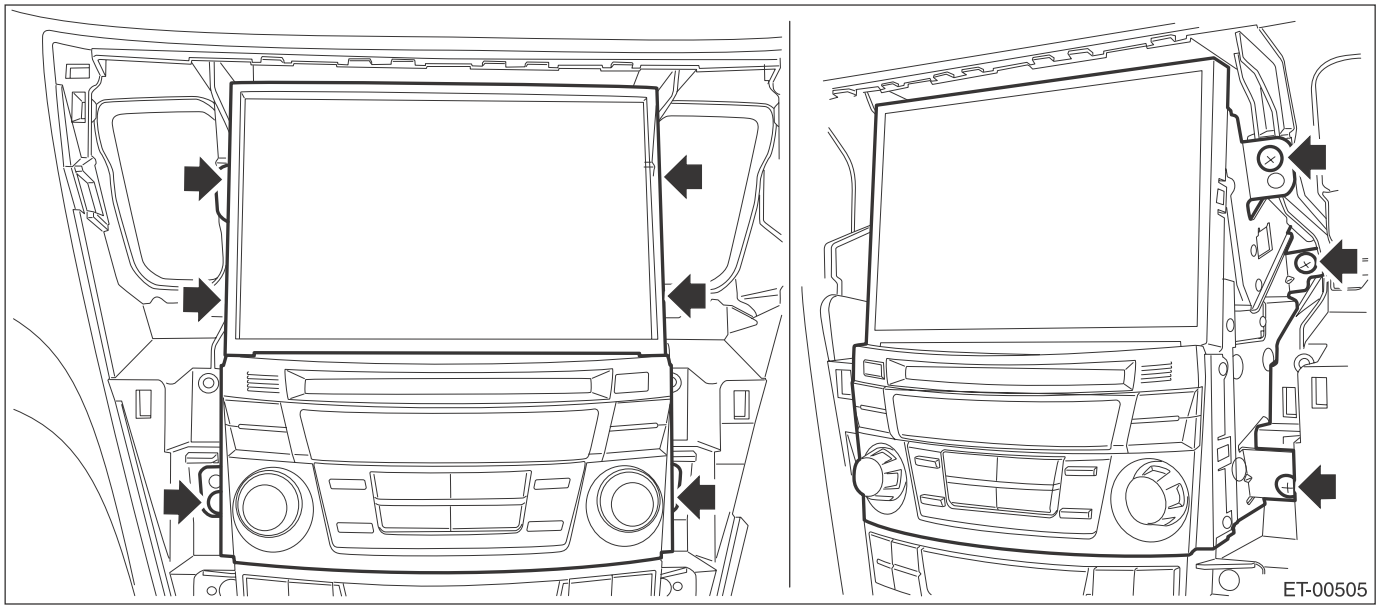

11) Remove the control panel assembly.
(1) Remove the screws, and pull out the control panel assembly toward you.
(2) Disconnect the connector, and remove the control panel assembly.

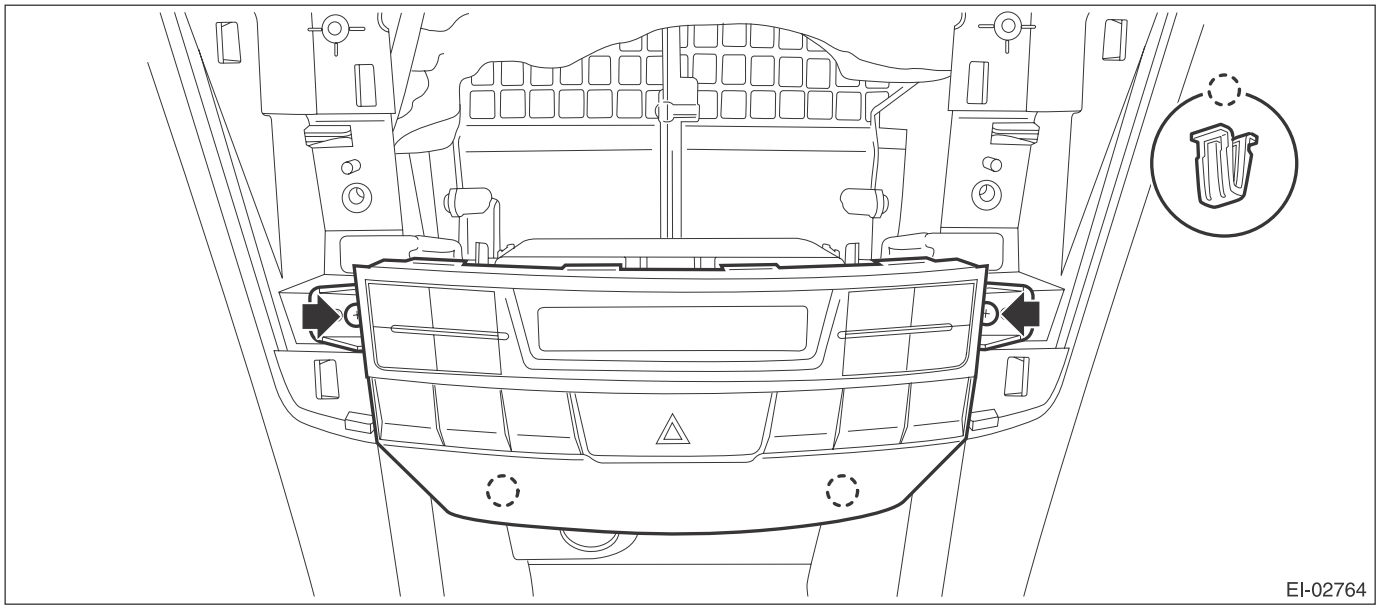

12) Remove the multi display assembly.

CAUTION:
Be careful not to damage the multi display or instrument panel.
(1) Detach the center speaker cover by releasing the claws and hooks.

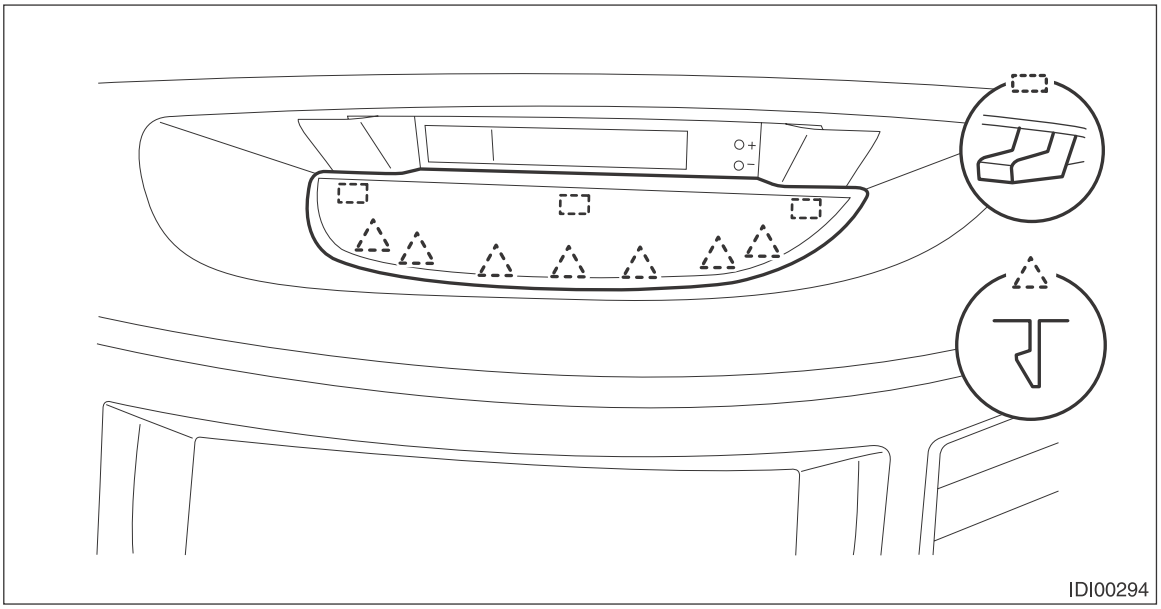

NOTE:
An easy way of removal is to first remove the audio assembly or navigation assembly and push up the cover from the backside.
(2) Release the clips and claws, detach the multi display panel LWR.

(3) Remove the screws and pull out the multi display toward you to disconnect the connectors.

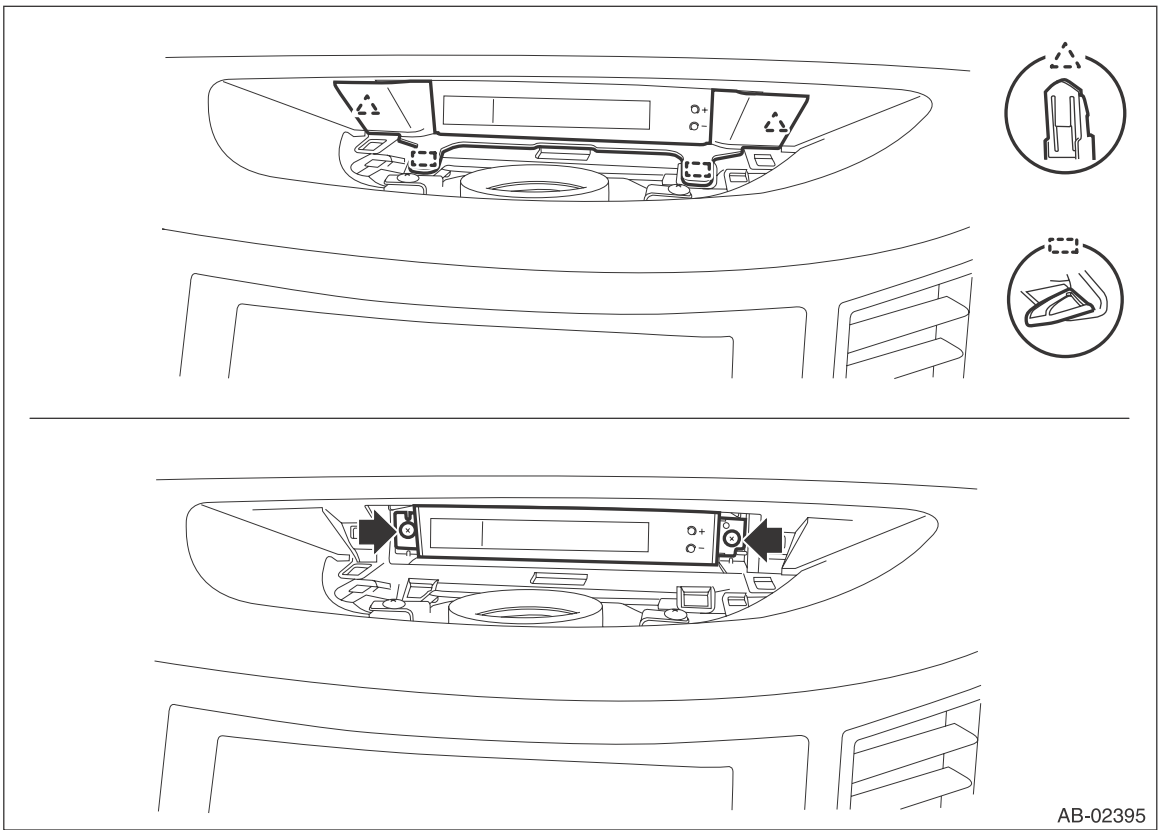

13) Remove the left and right front side speaker assembly. (Models with front side speaker)
(1) Release the clips and claws, then detach the side speaker cover.

CAUTION:
To remove the cover, use a plastic clip remover or equivalent tool.

(2) Remove the screws.

Preparation tool: Stubby screwdriver

(3) Disconnect the connector and remove the front side speaker assembly.

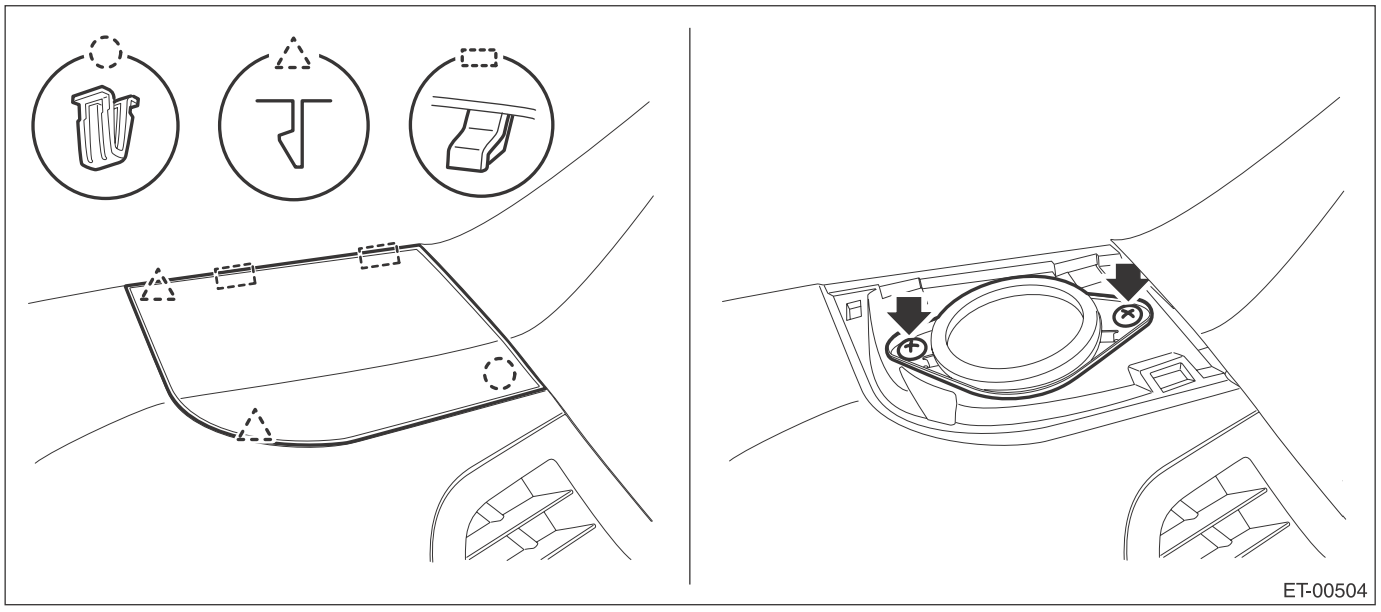

NOTE:
On the passenger's side, also disconnect the sunload sensor connector.

14) Remove the left and right front pillar trims.
(1) Pull the upper part of the front pillar trim towards the center of the vehicle.
(2) Insert long-nose pliers into the top part of the trim, grip the clip with the pliers and twist 90° in that position.

CAUTION:
Be careful not to damage the pillar trim surface and curtain airbag module when inserting the pliers.
(3) Holding the clip twisted as in the previous step, remove the front pillar trim from the clip.
(4) Remove the clip and the front pillar trim.

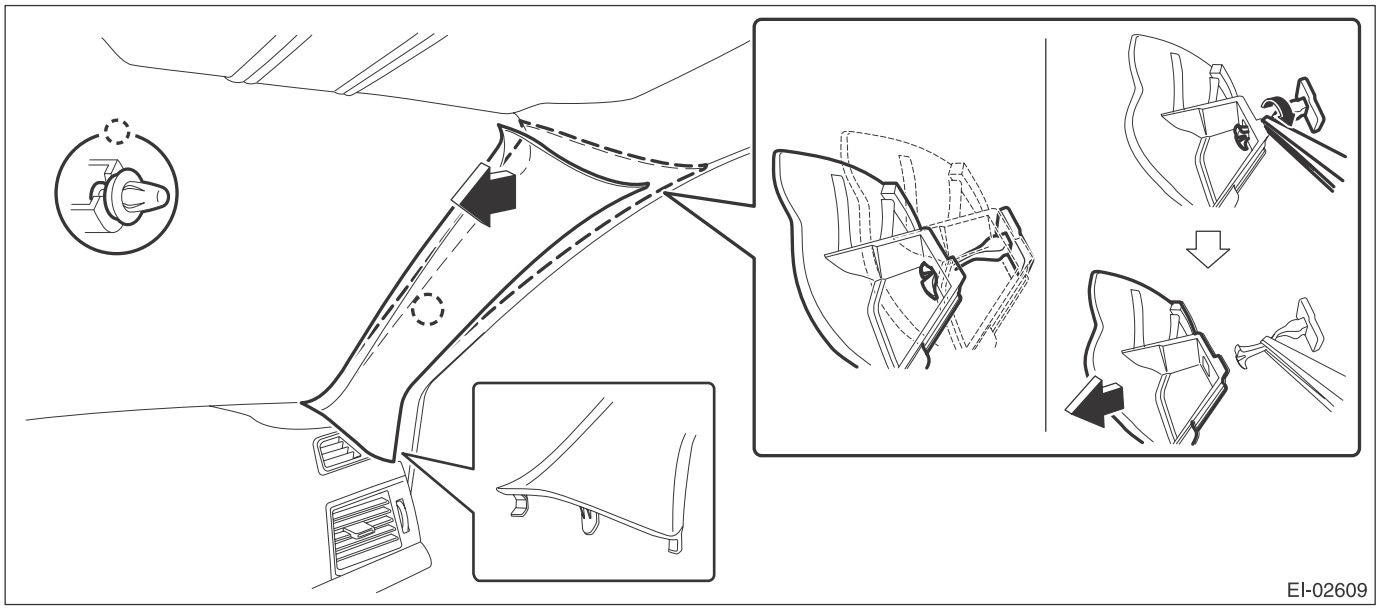

15) Remove the glove box lid assembly.
(1) Remove the glove box damper.
(2) Release the stoppers and remove the glove box lid assembly by pulling it toward you.

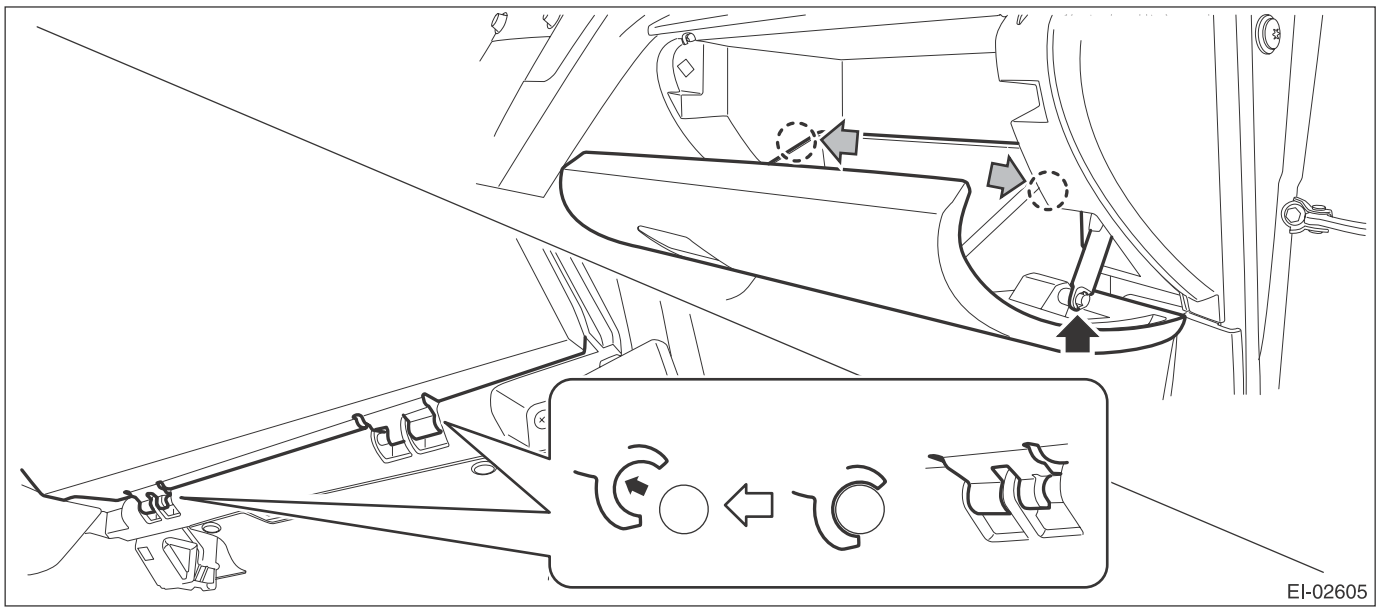

16) Release the clips, and remove the instrument panel side cover RH.

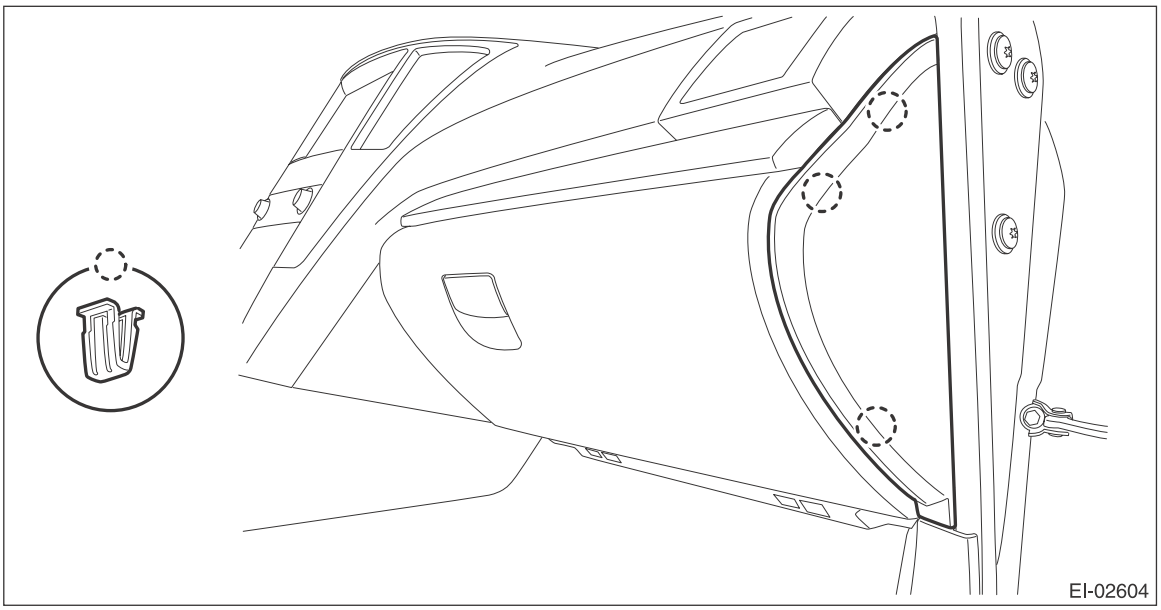

17) Remove the glove box back panel.
(1) Release the clips, and remove the glove box under cover.

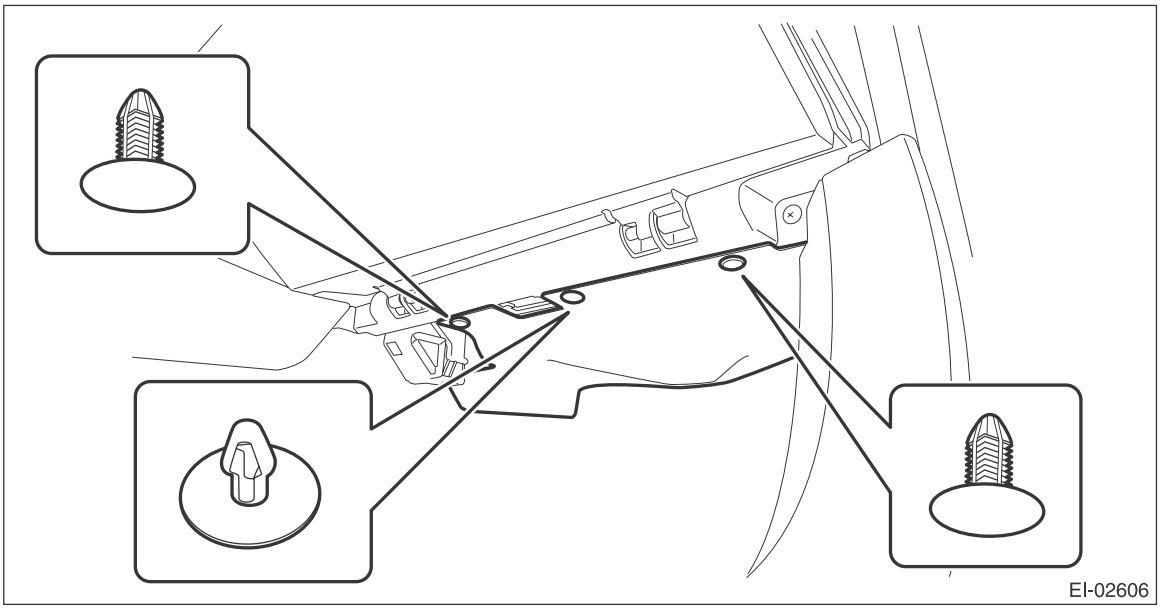

(2) Release the clips and claws, and remove the ornament panel assembly P.

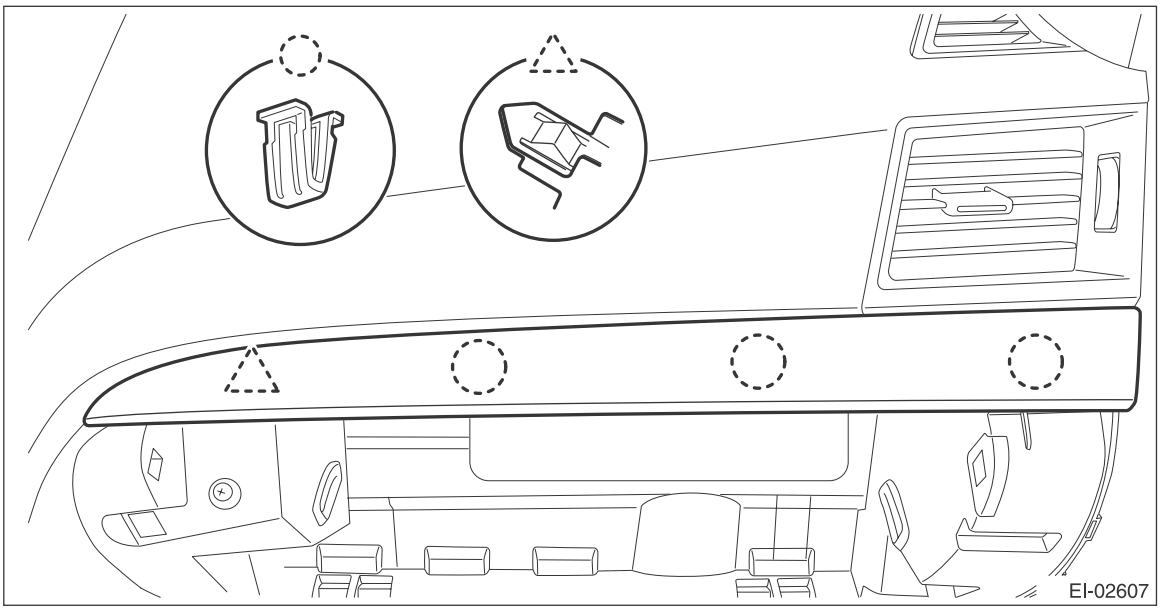

(3) Remove the screws and release the claws, then detach the glove box back panel.

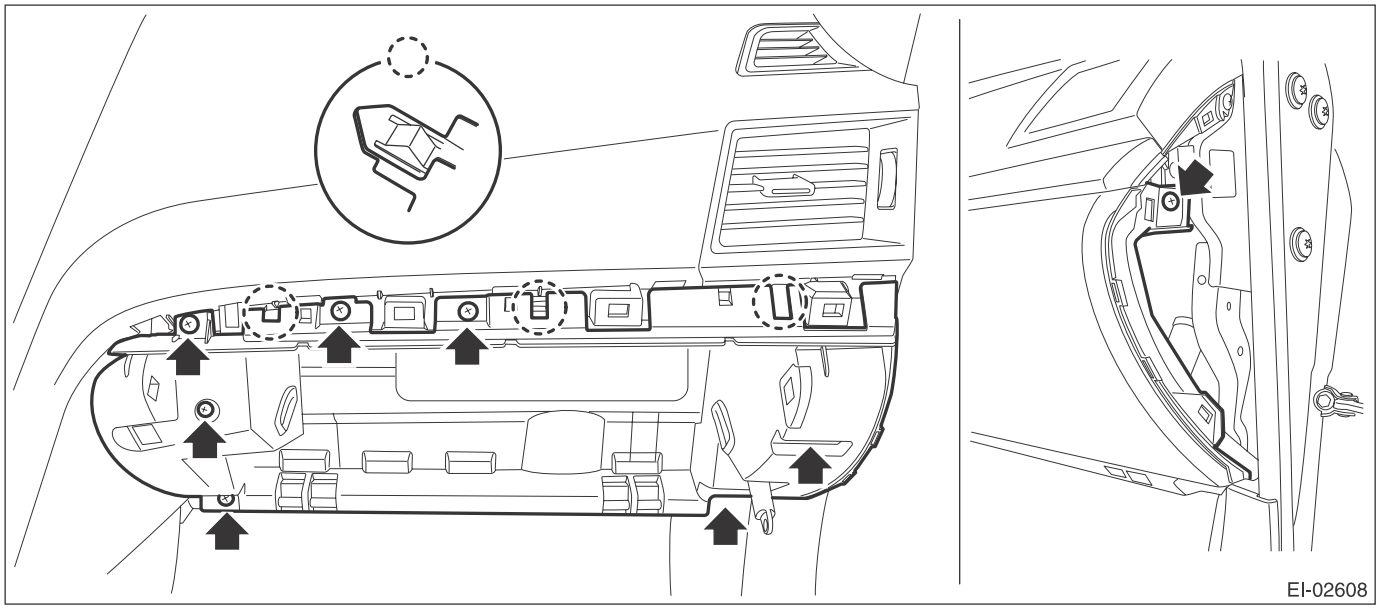

(4) Disconnect the glove box light LED connector.

18) Disconnect the connector from the passenger's airbag module assembly and remove the bolt.
(1) Release the connector and harness clamps and disconnect the airbag connector.

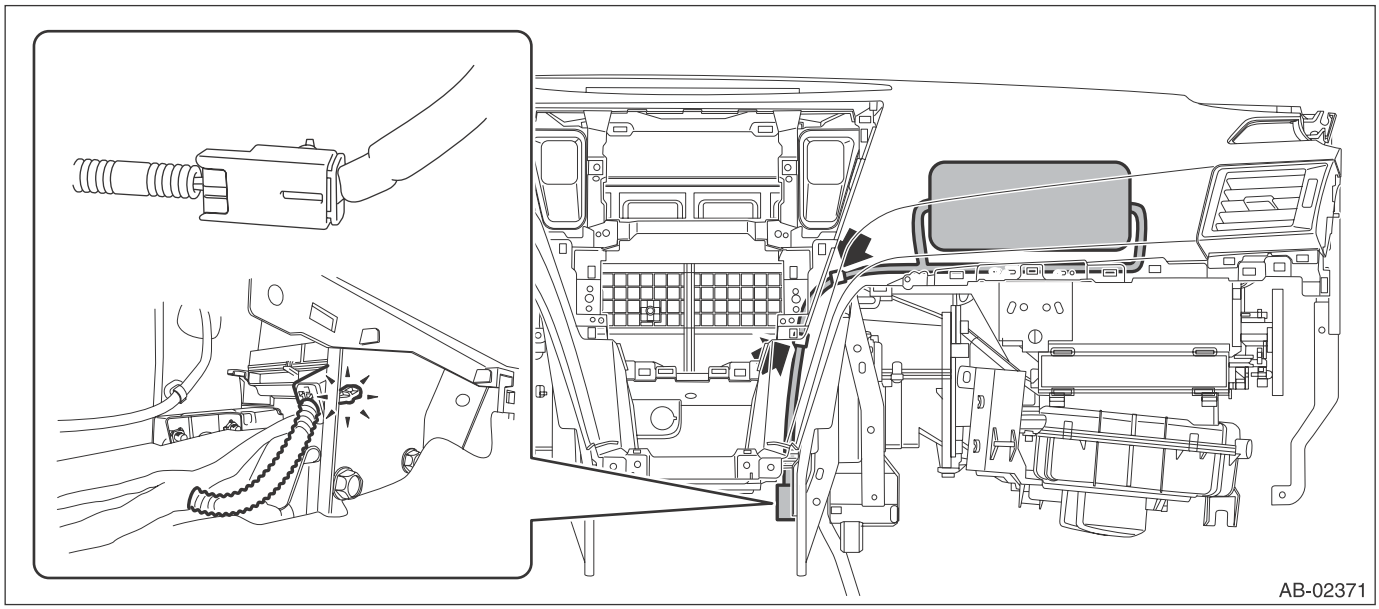

(2) Remove passenger's airbag module assembly bolts.

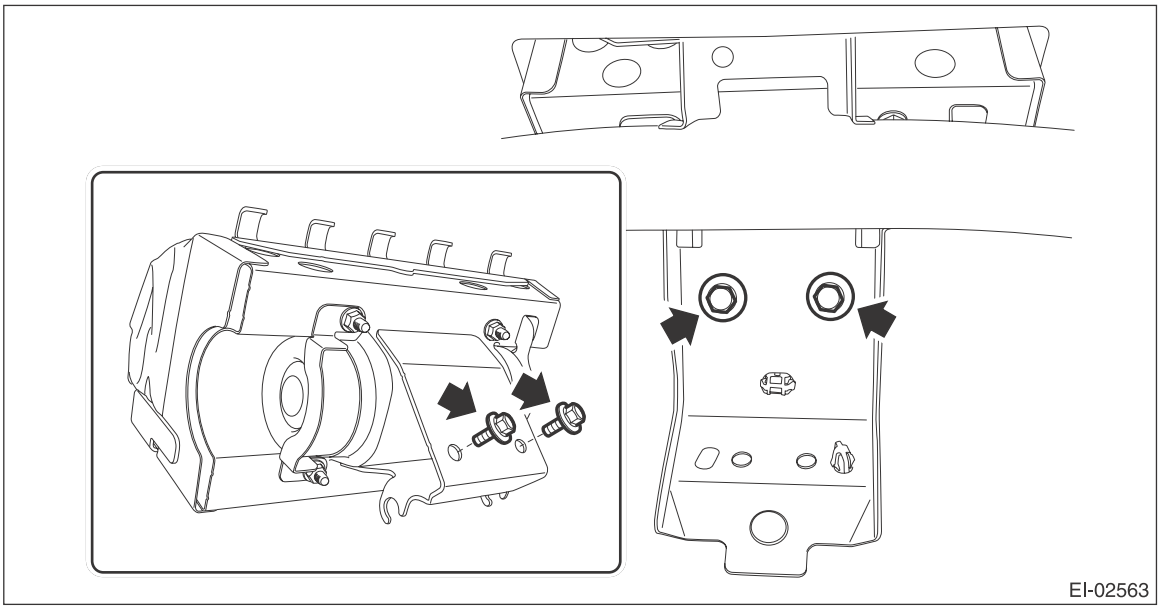

19) Remove the steering shaft assembly. <Ref. to PS-20, REMOVAL, Steering Column.>

20) Remove the instrument panel assembly.
(1) Remove the screws. (A), (B), (C), (D), (E), (F), (G), (H), (I)

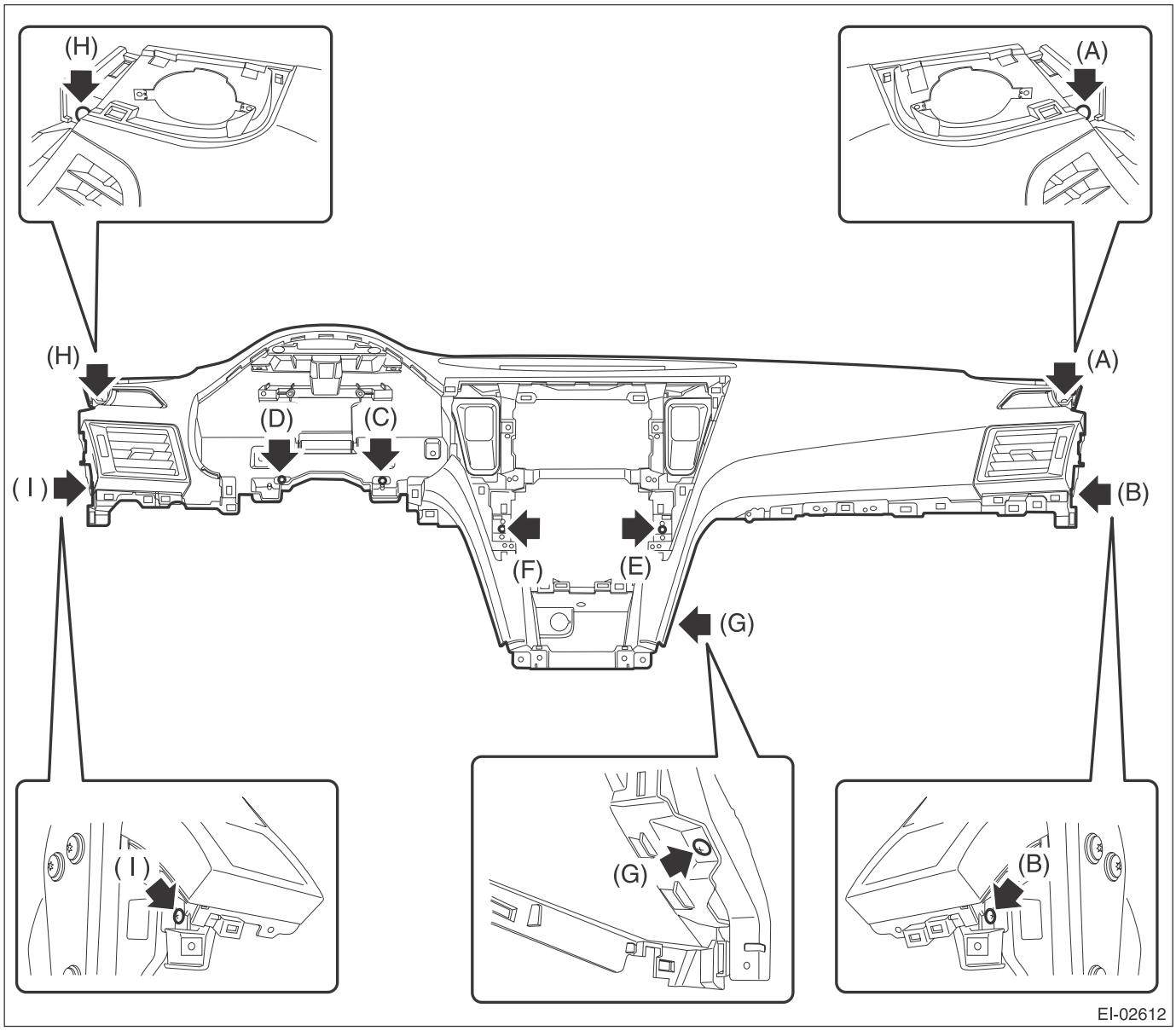

(2) Pull out the instrument panel assembly toward you and release the clamps of the left and right front side speakers.

Preparation tool: Stubby screwdriver

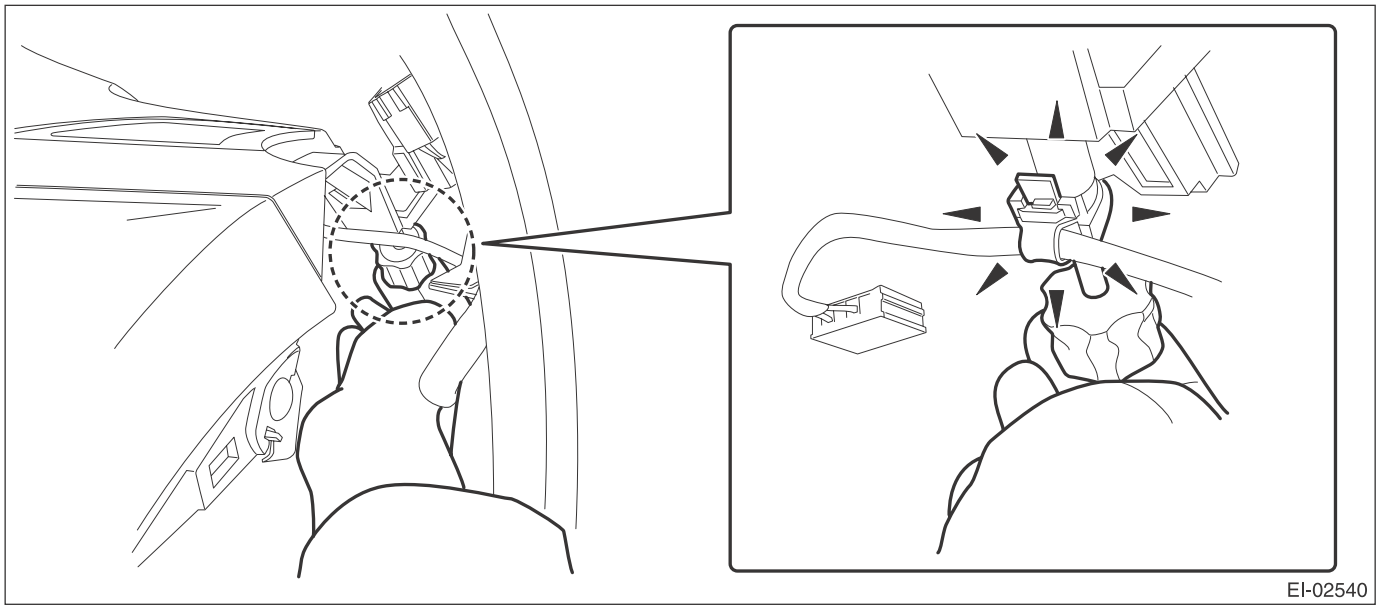

(3) After checking that all harness clamps and connectors are released and disconnected, remove the instrument panel assembly.

CAUTION:
Be careful not to damage the instrument panel surface and interior trims.

21) Release the claws, and then remove the left and right side sill cover-front INN.

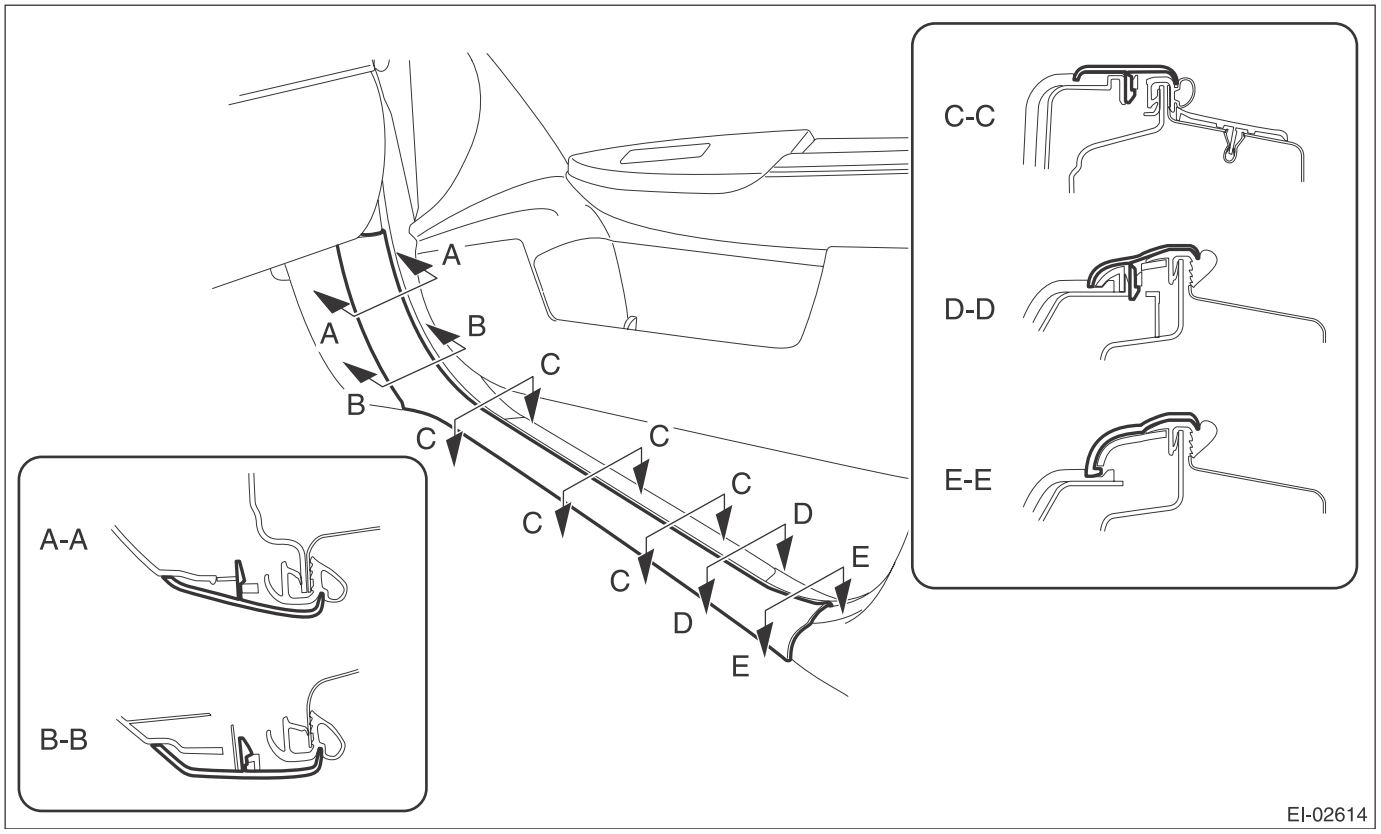

CAUTION:
Do not pull with excessive force. Doing so may damage the claws of the side sill cover INN.

NOTE:
To release the claws of the side sill cover INN, the following steps are recommended.
1. Take out the weather strip from under the side sill cover INN.
2. Turn over the floor mat and release the claw (C) by accessing from behind the side sill cover INN.

22) Remove the clip, and remove the left and right side sill cover front.

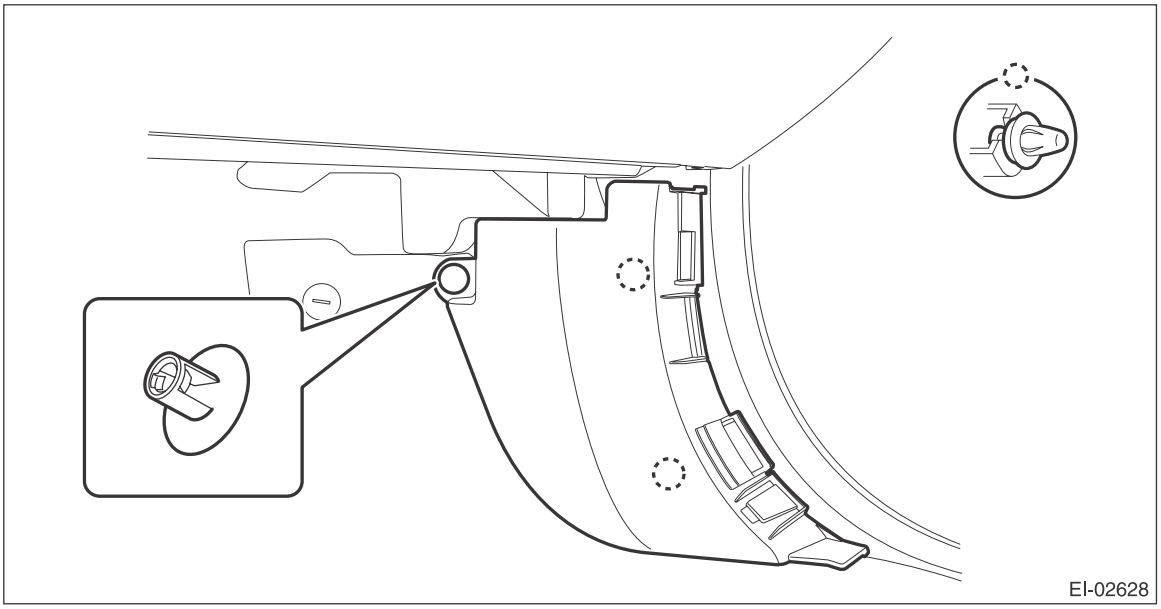

23) Remove the steering support beam assembly.
(1) Remove the fuse box and relay box.
(2) Remove the screws. (E)
(3) Disconnect all harness clamps and connectors of the instrument panel harness.
(4) Remove the TORX® bolt and adjuster bolt (a) (only passenger's side). (A), (B)

PREPARATION TOOL:

TORX® T40

Hexagon wrench (12 mm)

(5) Remove the bolts at the floor center. (C), (D)
(6) Remove the nut (F) and (G) behind the cooling unit.

(7) Remove the nut (H) behind the blower unit.

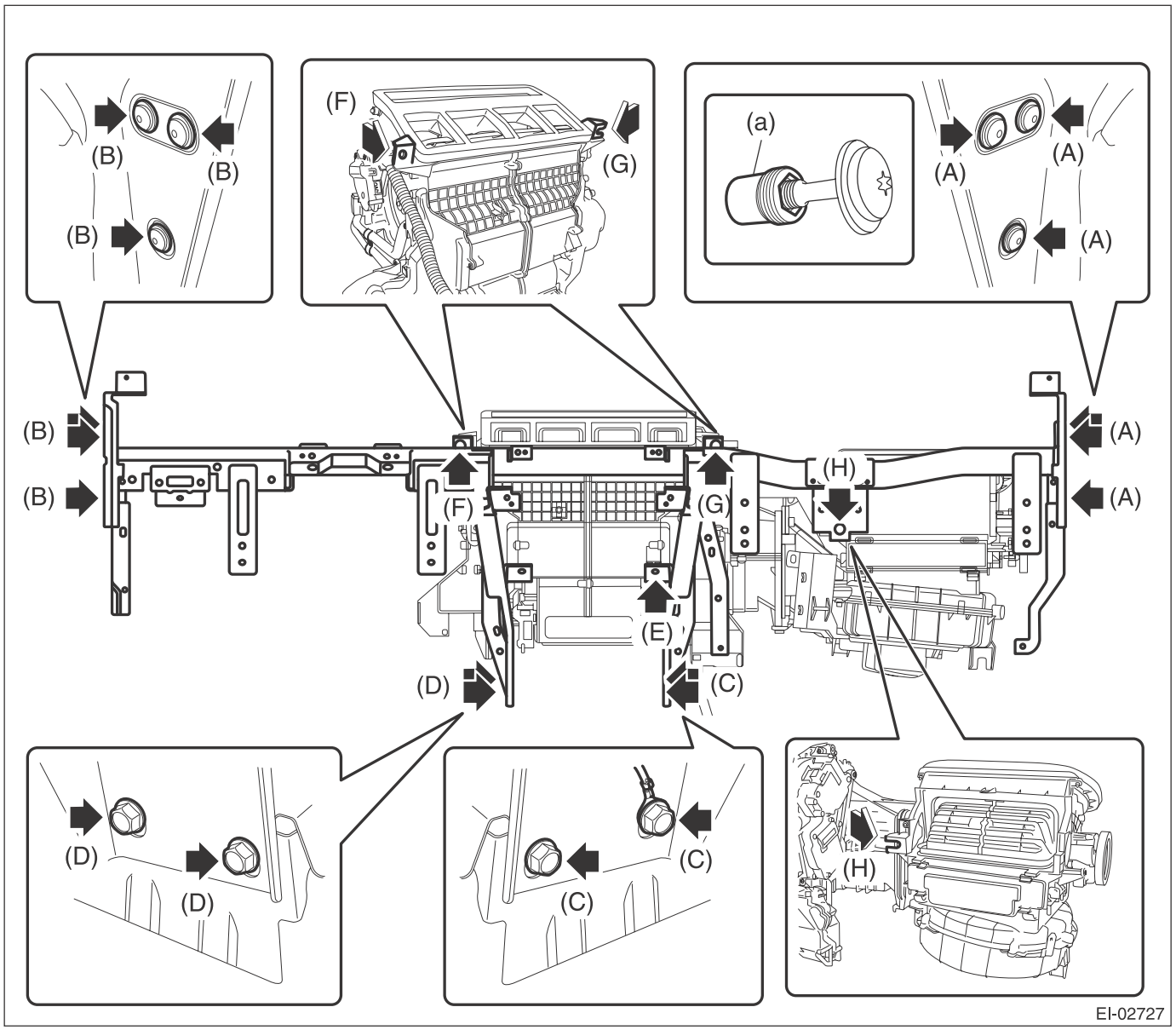

(8) Slightly lift the steering support beam assembly to detach the left and right pins. Then pull it toward you to remove the assembly.

CAUTION:
- **Check that all harness clamps and connectors are detached.**
- **Be careful not to damage interior trims.**

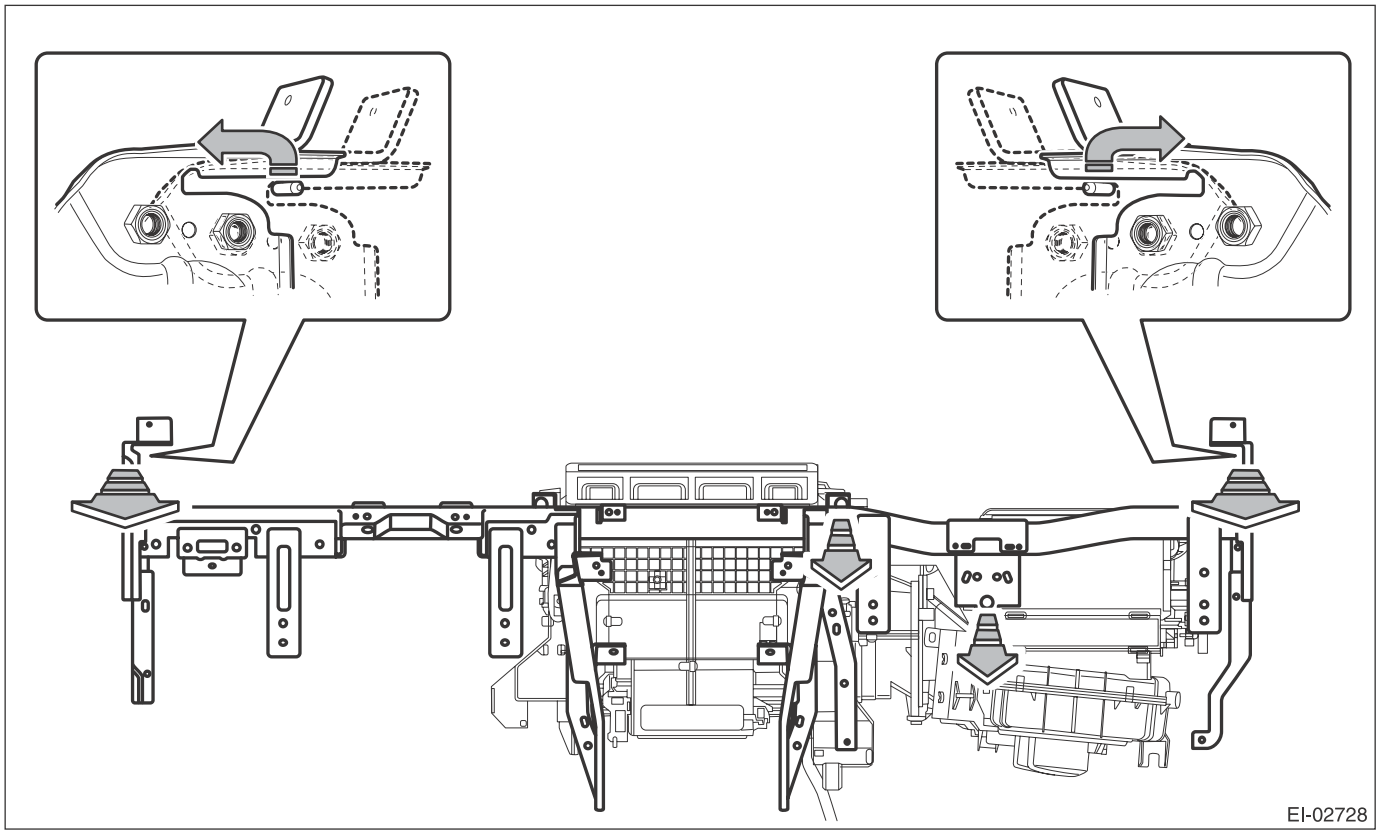

B: INSTALLATION

1) Install parts in the reverse order of removal to restore the instrument panel assembly.

NOTE:
How to install insulators
- Adhesive

Use polyurethane adhesive. When assembling the instrument panel assembly, wait until the adhesive has evaporated to prevent filling of the smell in the compartment.
- Double-sided tape

Use commercial double-sided tape. (Use strong double-sided adhesive tape.)
2) Insert the three matching pins on body into the instrument panel assembly.
3) Check that the matching pins are inserted securely, and then route the harness.
4) Install each part in the reverse order of removal.

Tightening torque:
Steering support beam:<Ref. to EI-15, INSTRUMENT PANEL, COMPONENT, General Description.>
Passenger's airbag module ASSY: 7.5 N·m (0.76 kgf-m, 5.5 ft-lb)
Steering shaft:<Ref. to PS-4, STEERING WHEEL AND COLUMN, COMPONENT, General Description.>
Console box: 6.5 N·m (0.66 kgf-m, 4.8 ft-lb)

20.Lower Inner Trim

A: REMOVAL

1) Release the claws, and then remove the side sill cover-front INN.

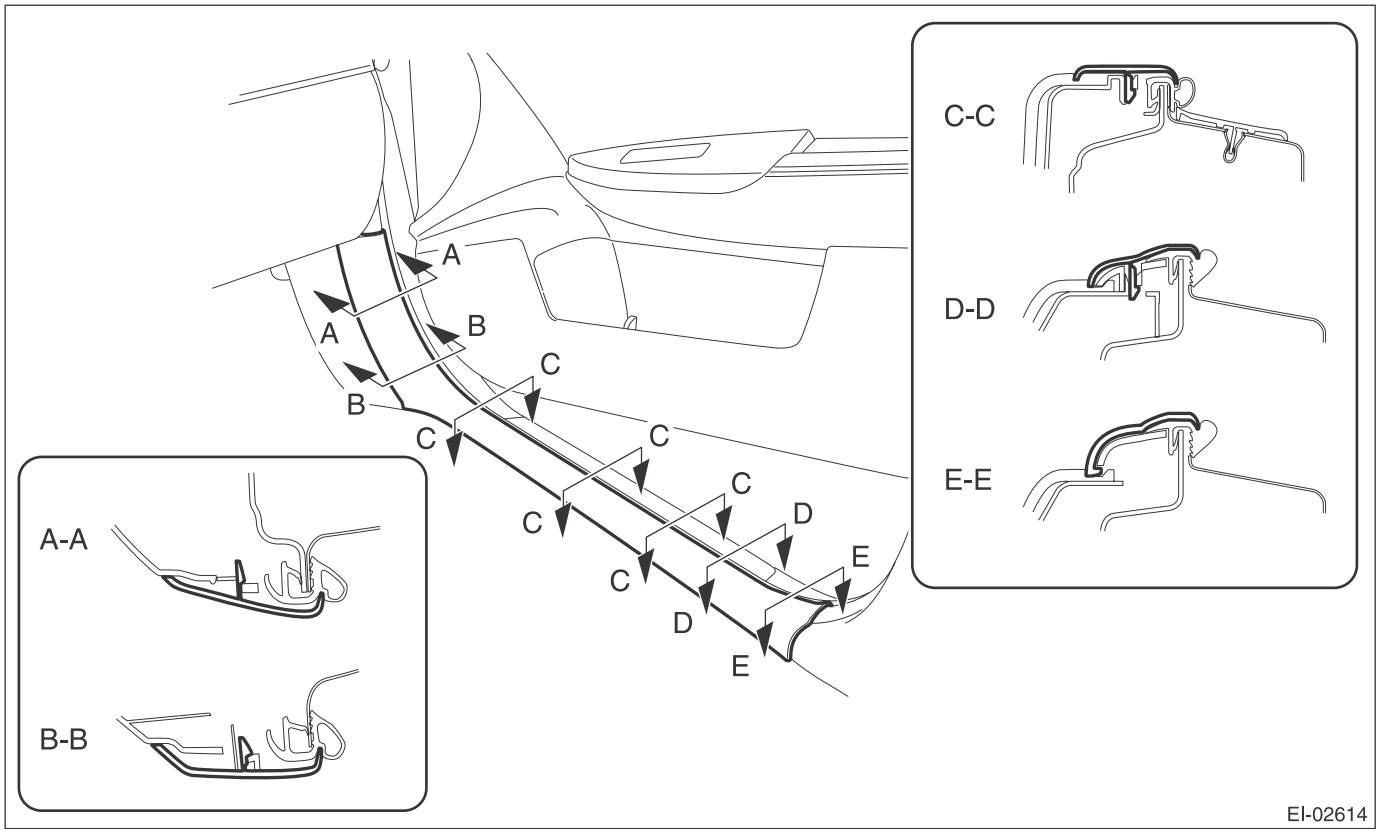

CAUTION:
Do not pull with excessive force. Doing so may damage the claws of the side sill cover INN.

NOTE:
To release the claws of the side sill cover INN, the following steps are recommended.
1. Take out the weather strip from under the side sill cover INN.
2. Turn over the floor mat and release the claw (C) by accessing from behind the side sill cover INN.

2) Remove the clip, and remove the side sill cover front.

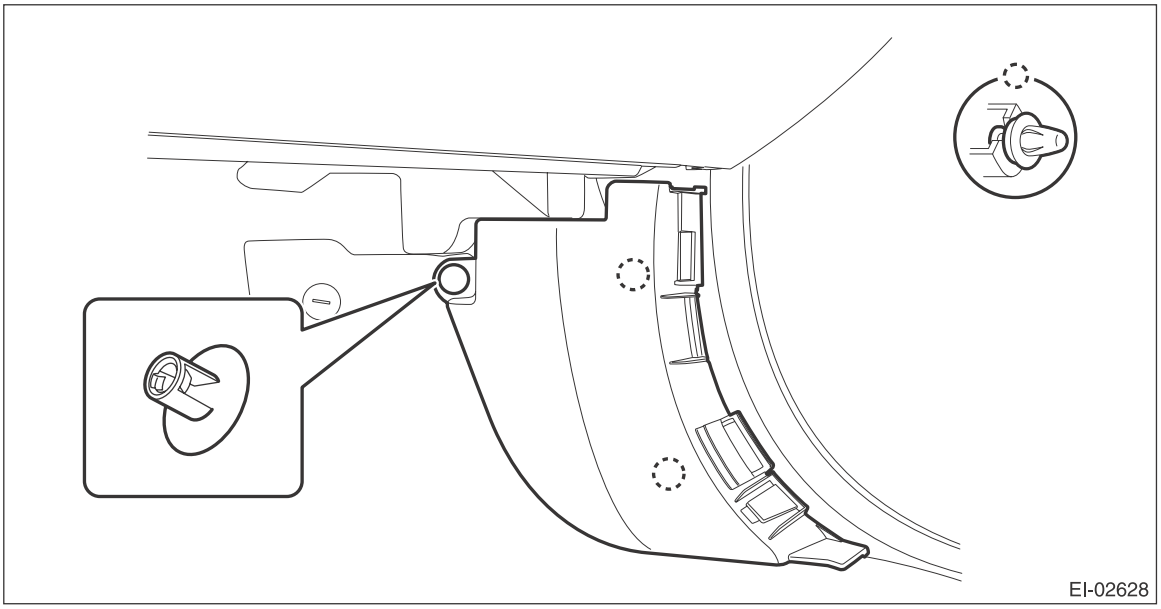

3) Remove the rear seat cushion assembly.
(1) Pull up the seat cushion and release the hook.

CAUTION:
If the hook is removed from vehicle body, replace the hook with the new part to avoid the deterioration of seat securing.

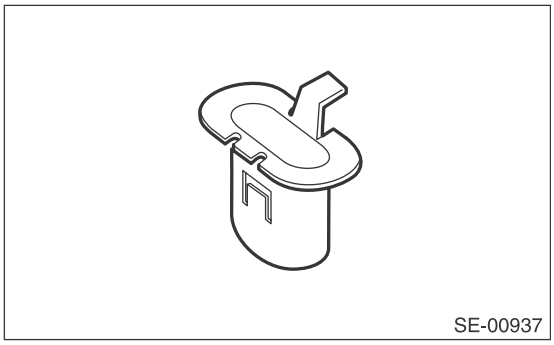

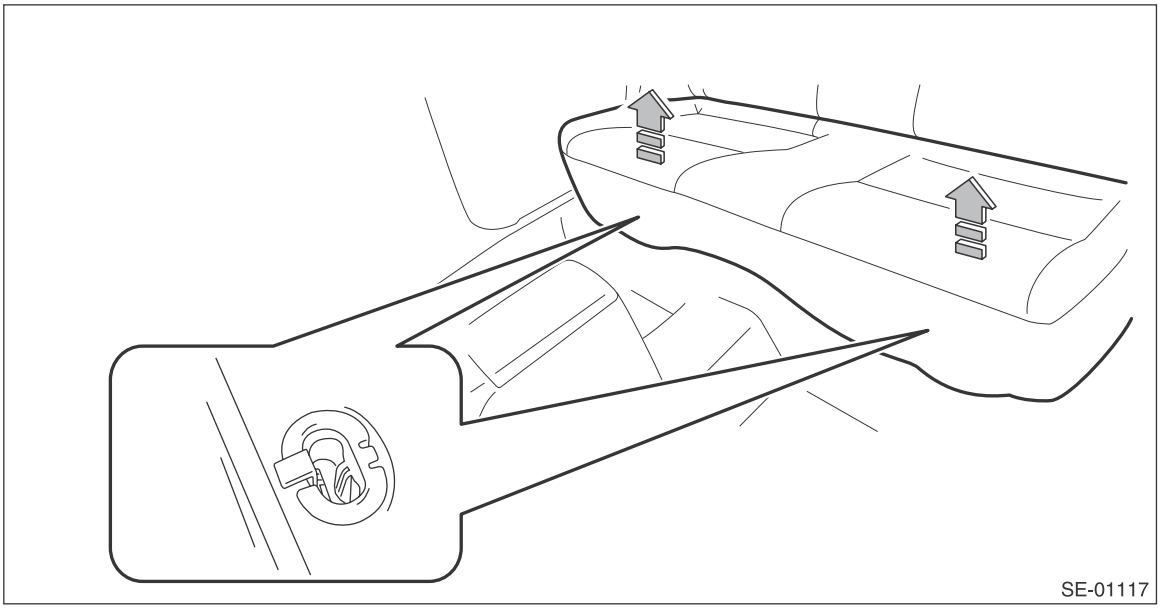

(2) Remove the hook (A) by pushing it back while lifting the front side of the seat cushion, and remove the seat cushion.

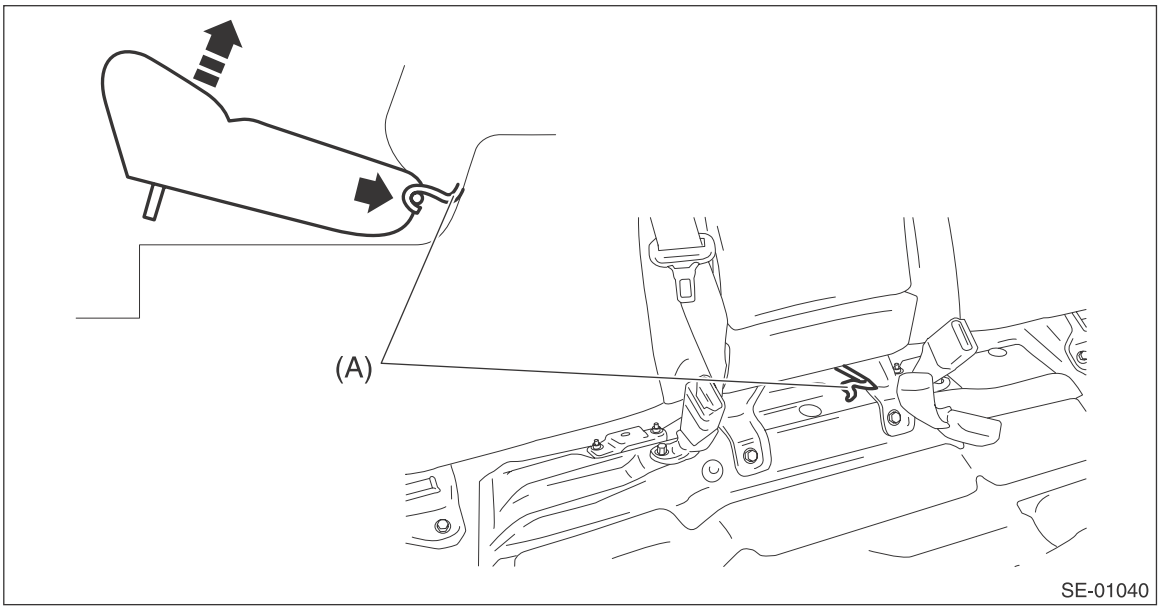

4) Release the clips and claws, and then remove the side sill cover - rear INN.

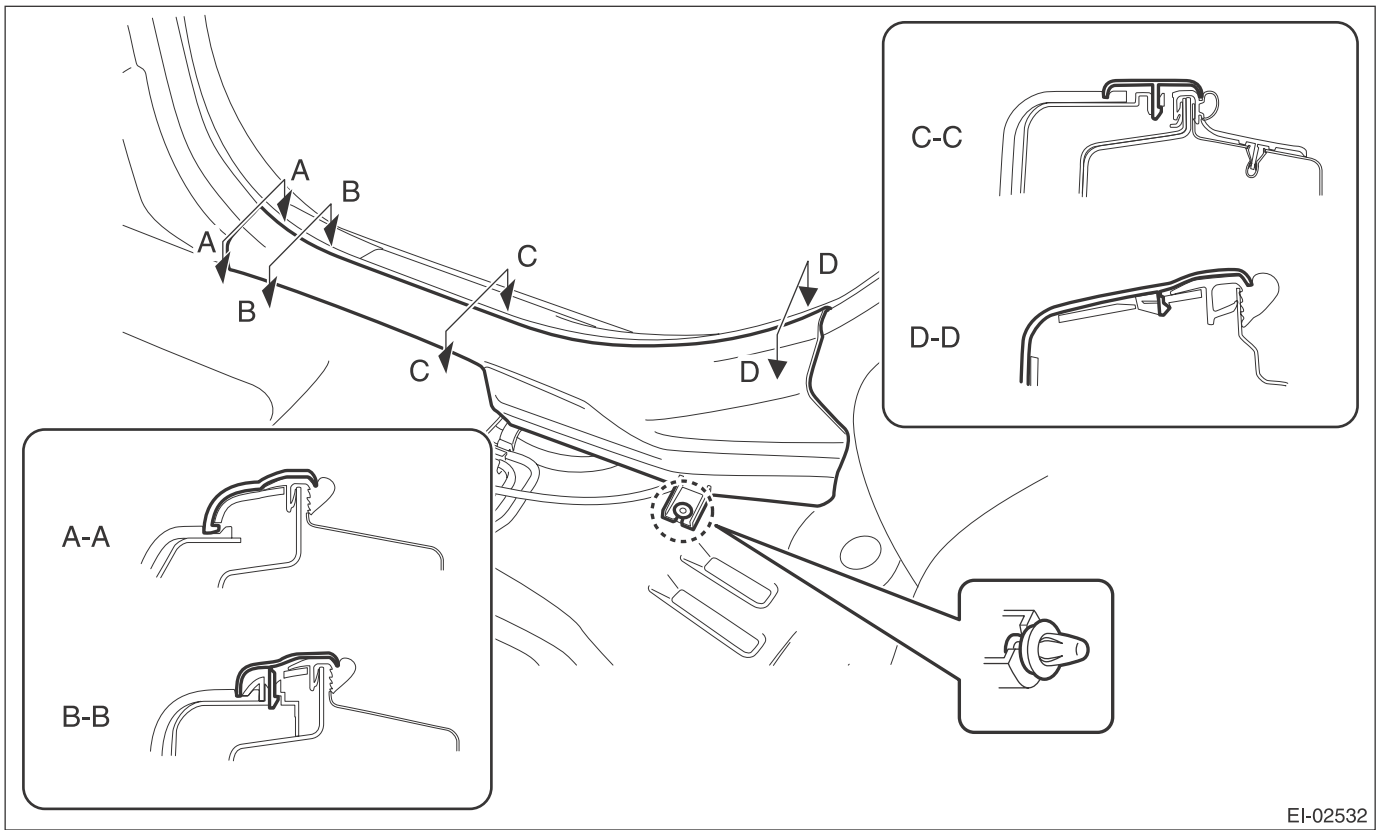

CAUTION:
Do not pull with excessive force. Doing so may damage the claws of the side sill cover INN.

NOTE:
To release the claws of the side sill cover INN, the following steps are recommended.
1. Take out the weather strip from under the side sill cover INN.
2. Turn over the floor mat and release the claws (C) and (D) by accessing from behind the side sill cover INN.

5) Remove the center pillar trim LWR.
(1) Release the clip by pulling the center pillar trim LWR toward you.
(2) Expand the claws of center pillar trim LWR outward and remove it from the center pillar trim UPR.

CAUTION:
Do not expand the center pillar trim LWR excessively. Doing so may damage the trim.

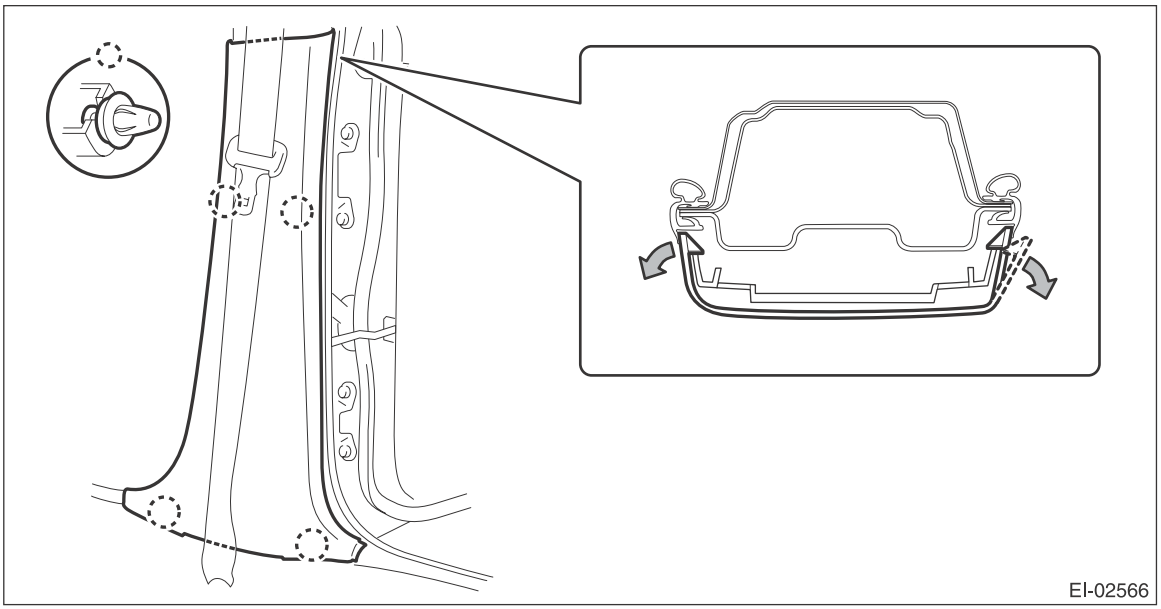
EI-02566

NOTE:
First release the claw located to the rear of the vehicle.
6) Release the claws, and then remove the side sill cover-front OUT.

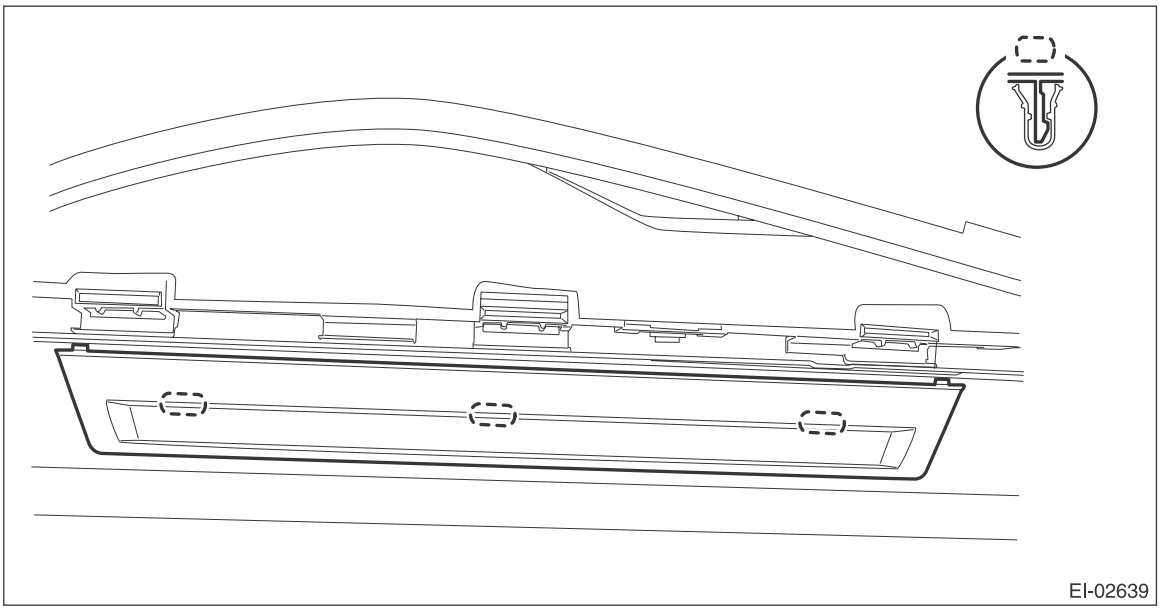
EI-02639

7) Release the claws and metal clips, and then remove the side sill cover-rear OUT.

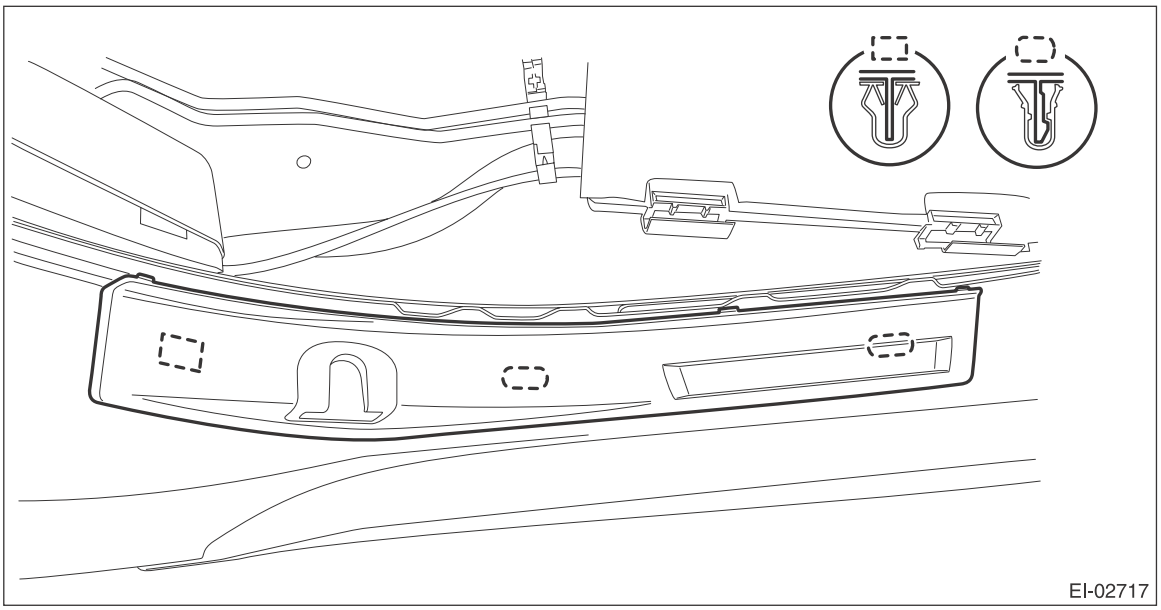

B: INSTALLATION

Install each part in the reverse order of removal.

CAUTION:
If the hook is removed from vehicle body, replace the hook with the new part to avoid the deterioration of seat securing.

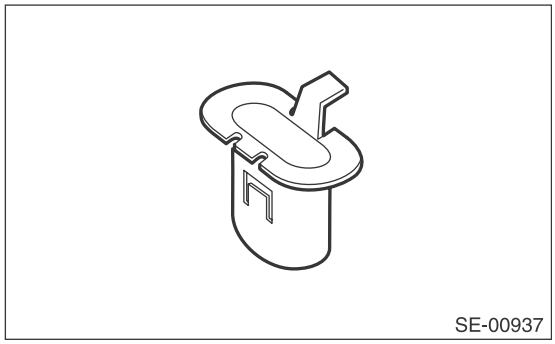

NOTE:
Assemble the center pillar trim LWR to the center pillar trim UPR securely.

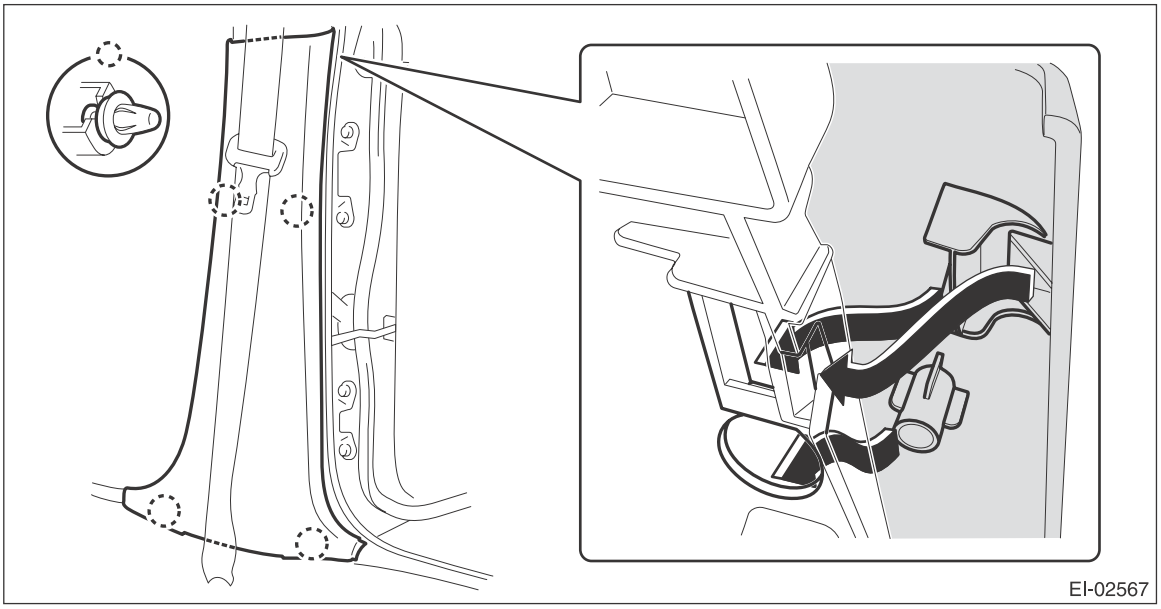

21.Upper Inner Trim

A: REMOVAL

1) Remove the front pillar trim.
   (1) Pull the upper part of the front pillar trim towards the center of the vehicle.
   (2) Insert long-nose pliers into the top part of the trim, grip the clip with the pliers and twist 90° in that position.

CAUTION:
Be careful not to damage the pillar trim surface and curtain airbag module when inserting the pliers.
   (3) Holding the clip twisted as in the previous step, remove the front pillar trim from the clip.
   (4) Remove the clip and the front pillar trim.

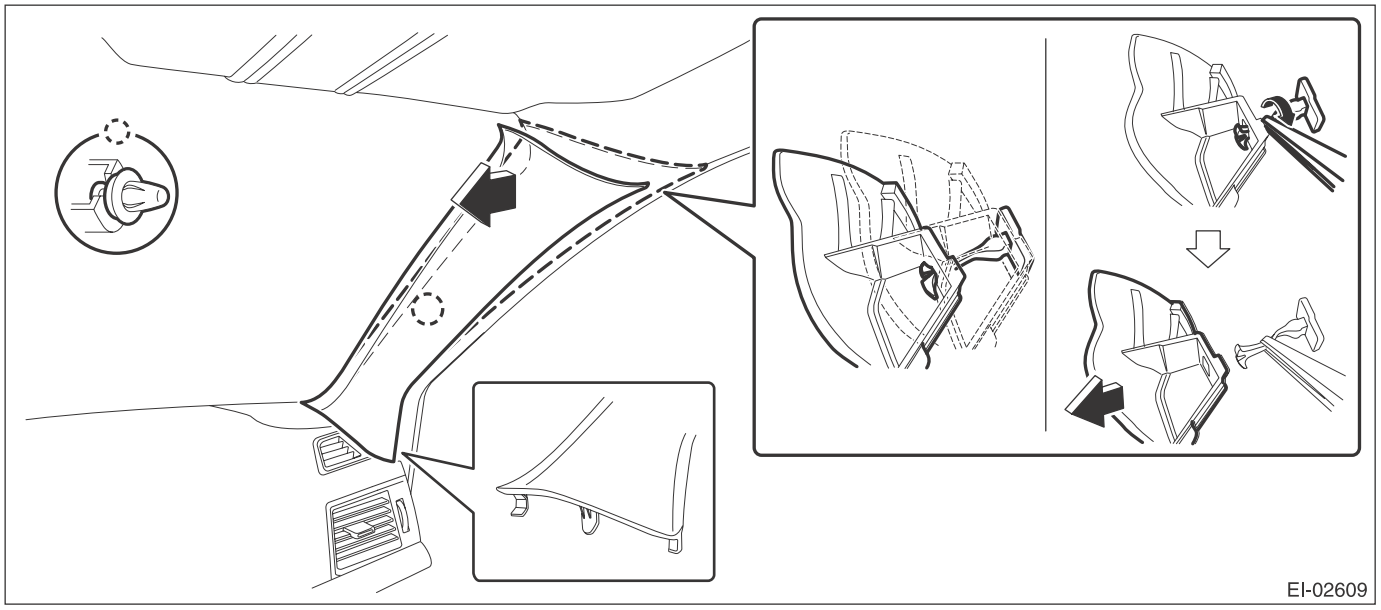

2) Release the claws, and then remove the side sill cover-front INN.

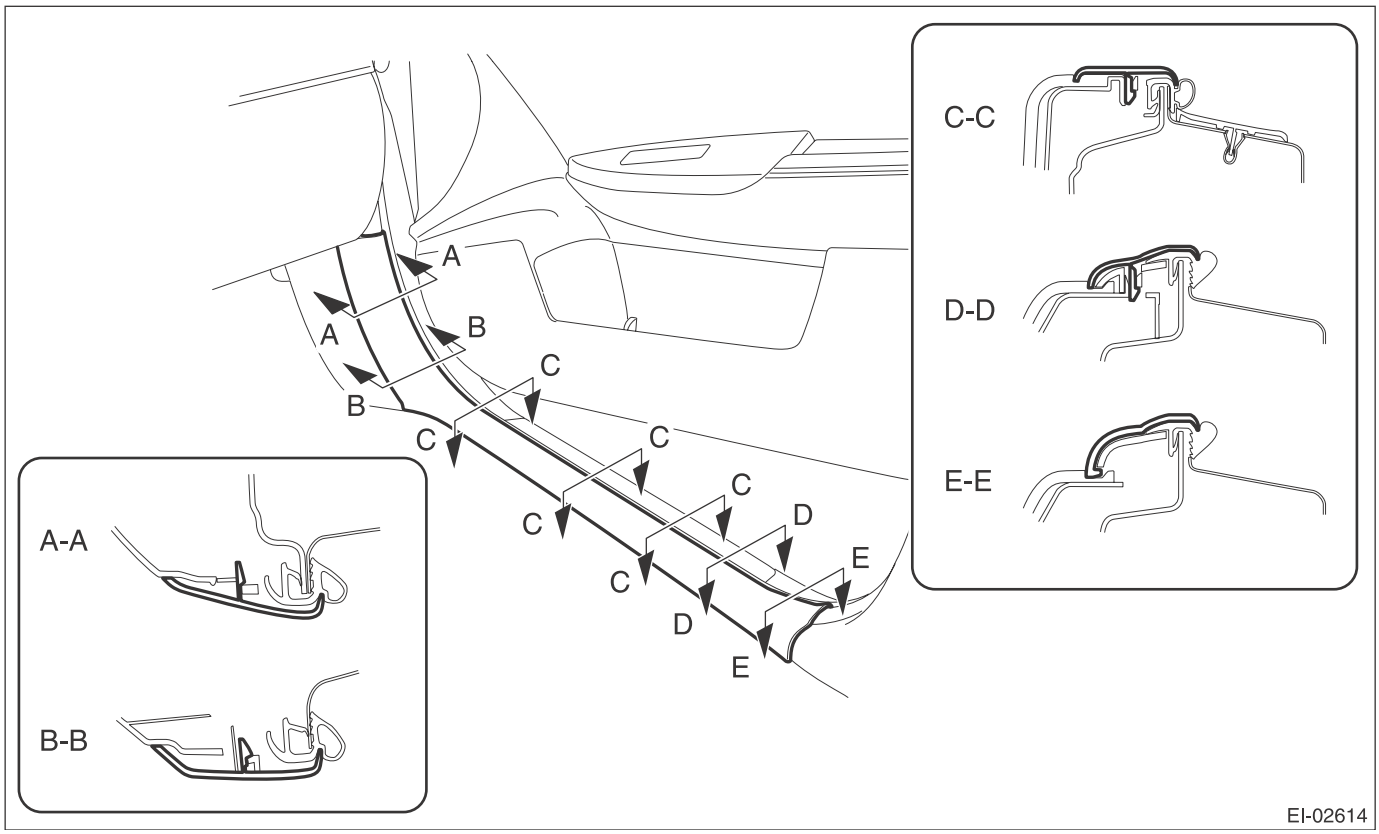

CAUTION:
Do not pull with excessive force. Doing so may damage the claws of the side sill cover INN.

NOTE:
To release the claws of the side sill cover INN, the following steps are recommended.
1. Take out the weather strip from under the side sill cover INN.
2. Turn over the floor mat and release the claw (C) by accessing from behind the side sill cover INN.

3) Remove the rear seat cushion assembly.
(1) Pull up the seat cushion and release the hook.

CAUTION:
If the hook is removed from vehicle body, replace the hook with the new part to avoid the deterioration of seat securing.

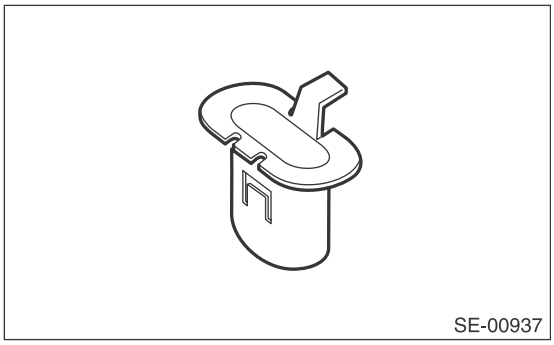
SE-00937

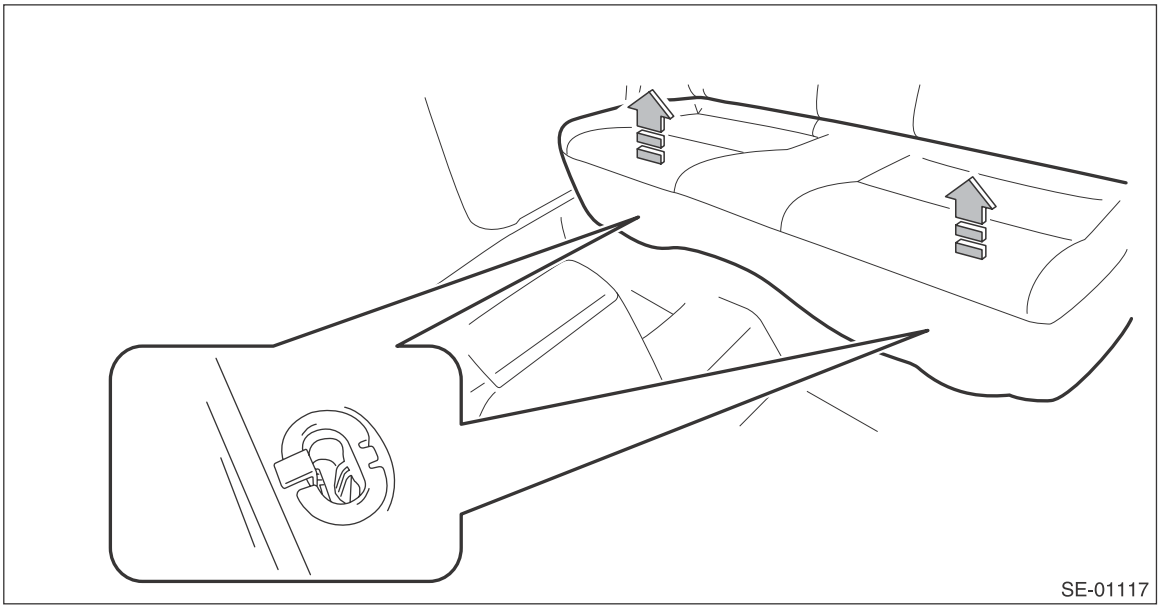
SE-01117

(2) Remove the hook (A) by pushing it back while lifting the front side of the seat cushion, and remove the seat cushion.

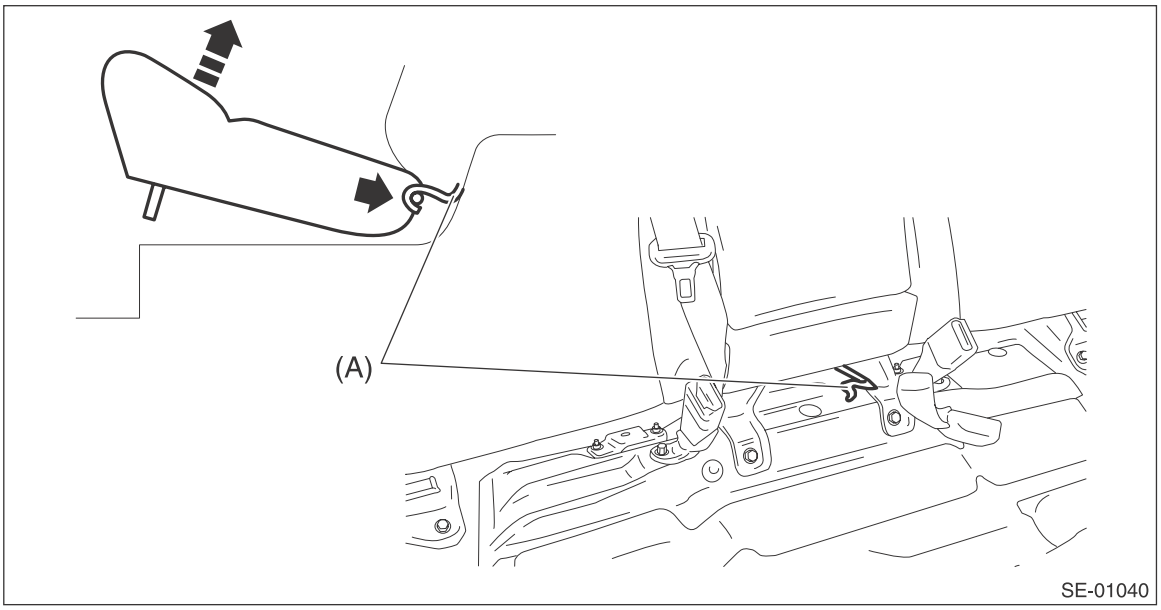

SE-01040

4) Release the clips and claws, and then remove the side sill cover - rear INN.

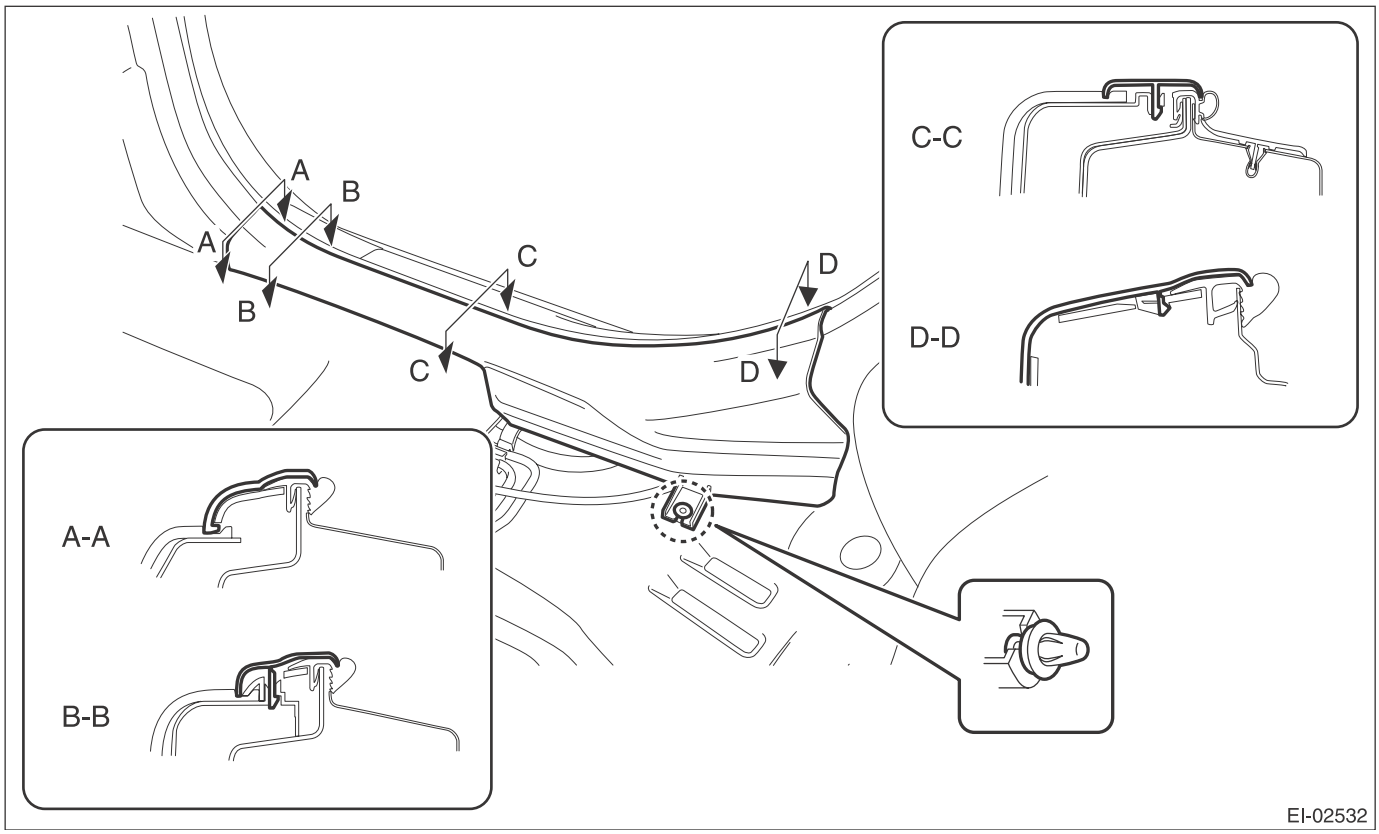

CAUTION:
Do not pull with excessive force. Doing so may damage the claws of the side sill cover INN.

NOTE:
To release the claws of the side sill cover INN, the following steps are recommended.
1. Take out the weather strip from under the side sill cover INN.
2. Turn over the floor mat and release the claws (C) and (D) by accessing from behind the side sill cover INN.

5) Remove the center pillar trim LWR.
(1) Release the clip by pulling the center pillar trim LWR toward you.
(2) Expand the claws of center pillar trim LWR outward and remove it from the center pillar trim UPR.

CAUTION:
Do not expand the center pillar trim LWR excessively. Doing so may damage the trim.

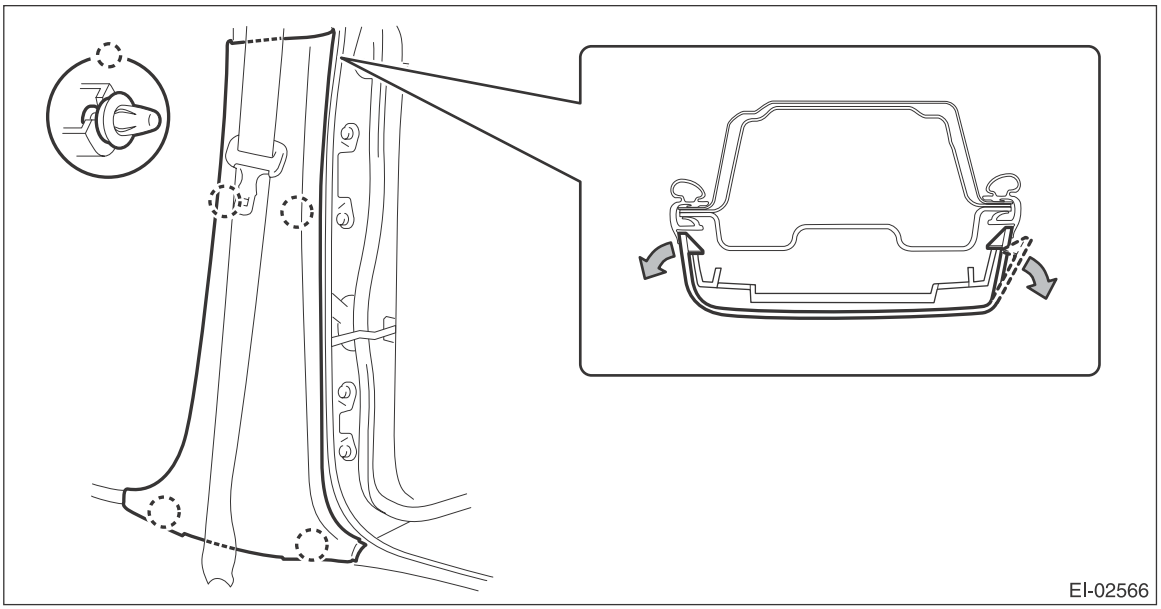
EI-02566

NOTE:
First release the claw located to the rear of the vehicle.
6) Remove the center pillar trim UPR.
(1) Remove the seat belt lower anchor bolt.

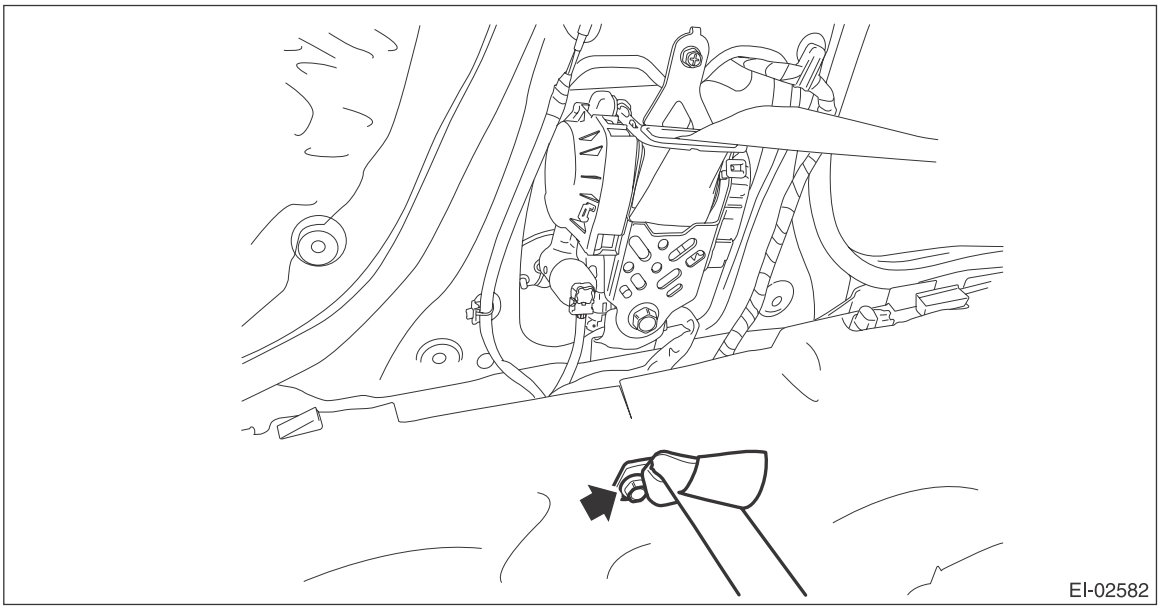
EI-02582

(2) Release the clip by pulling the lower part of the trim toward you.

(3) Remove the clip by pulling the upper part of the trim toward you, and while lowering the entire trim, remove the center pillar trim UPR.

CAUTION:
Do not reuse the upper clips of the center pillar trim UPR. Once the clip is removed, its holding force is reduced. Be sure to replace it with a new clip.

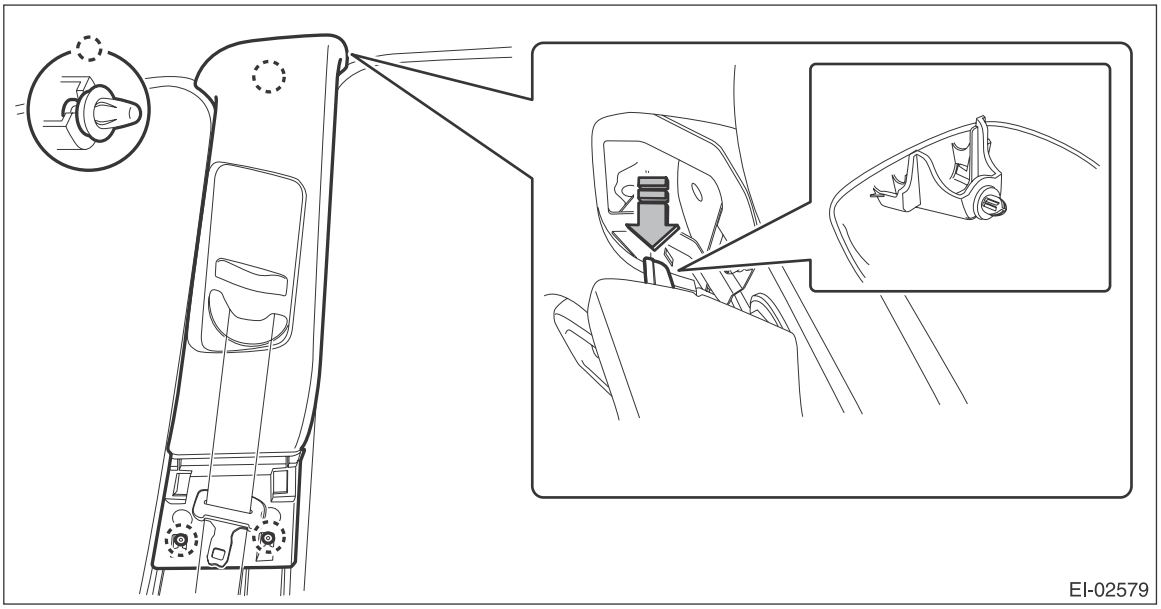

(4) Pull out the seat belt and remove the center pillar trim UPR.

B: INSTALLATION

CAUTION:
• Do not reuse the clips in the upper section of the front pillar trim. Always replace them with new ones.
Once removed from the pillar trim, the clip retention power deteriorates and the front pillar trim may come off.
• Do not reuse the clips in the upper section of the center pillar trim. Always replace them with new ones.
Once the pillar trim is removed, the clip retention power deteriorates and the center pillar trim may come off.
• Before installing the front pillar trim, check the condition of (white) protective unwoven cloth of curtain airbag. If it is damaged (airbag module cloth is exposed), replace the curtain airbag module assembly with a new part.
1) Remove any clips remaining on body.
2) Prepare new clips and attach them to the front pillar trim.

3) Install the front pillar trim.

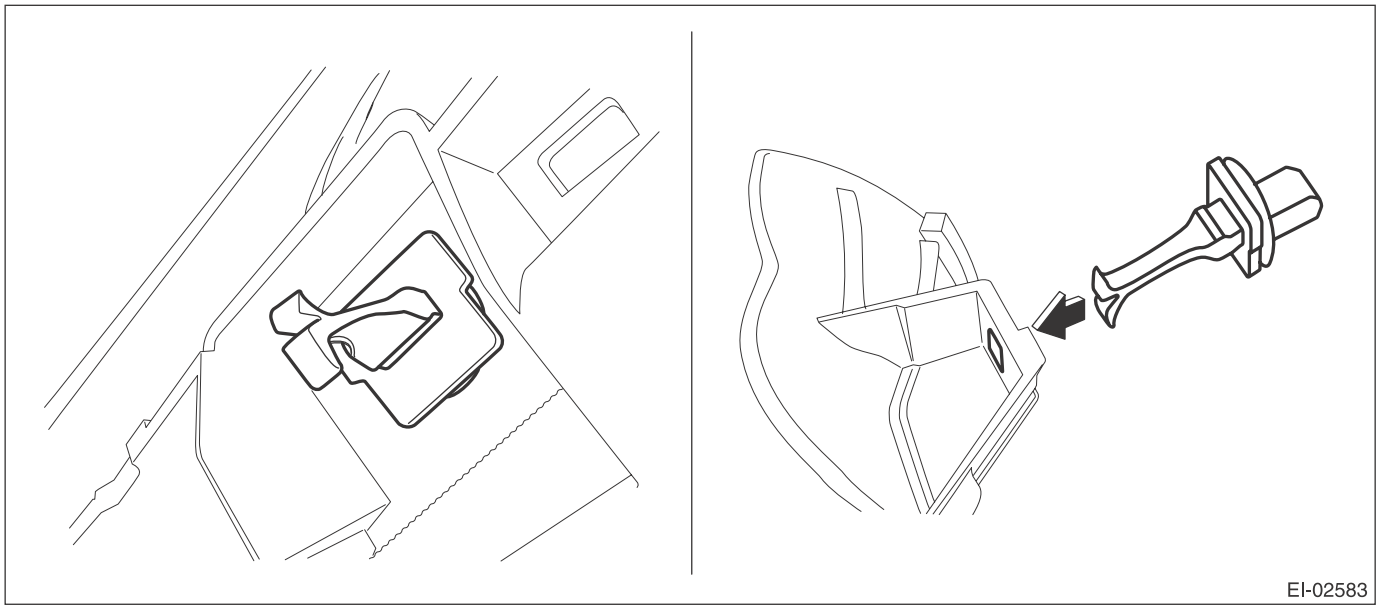

4) Assemble the center pillar trim LWR to the center pillar trim UPR securely.

CAUTION:
Do not forget to install the seat belt.

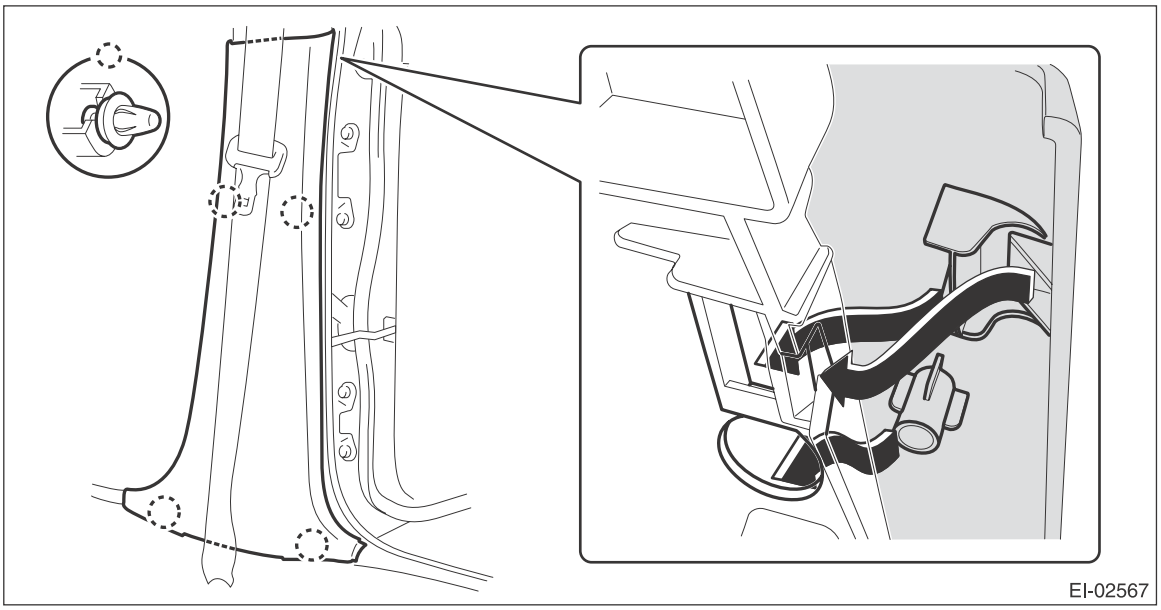

5) Assemble the center pillar trim LWR and center pillar trim UPR to the body.

CAUTION:
Do not reuse the clips in the upper section of the pillar trim. Always replace them with new ones.

(1) Guide the seat belt through the center pillar trim UPR.
(2) Insert the upper claws of the pillar trim.

(3) Attach the pillar trim by fitting the lower clips to the body.

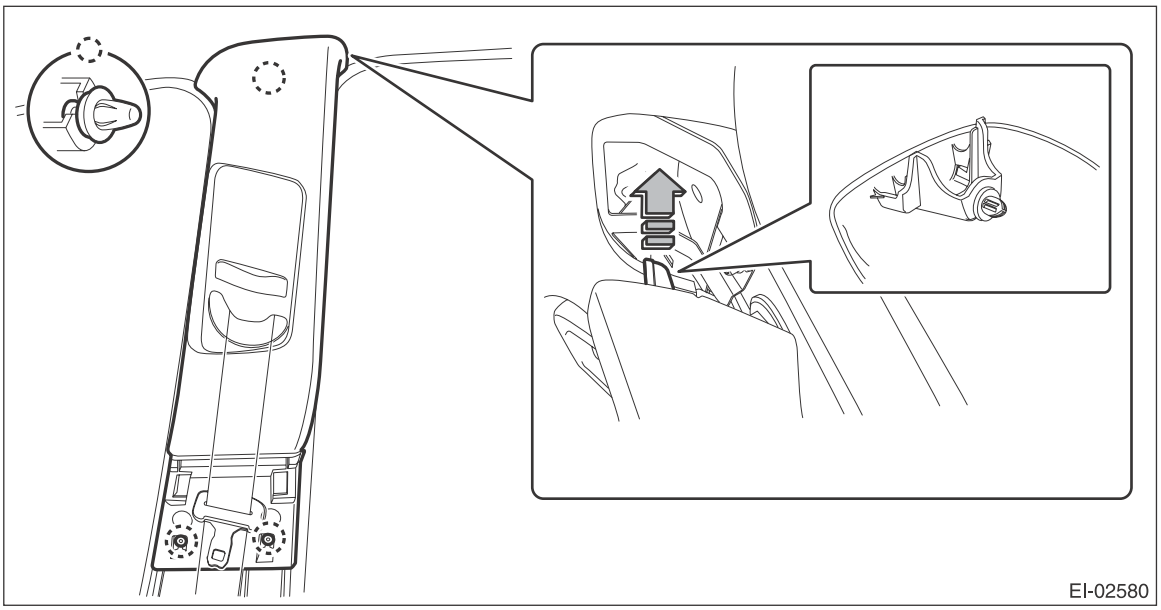

6) Install each part in the reverse order of removal.

CAUTION:
If the hook is removed from vehicle body, replace the hook with the new part to avoid the deterioration of seat securing.

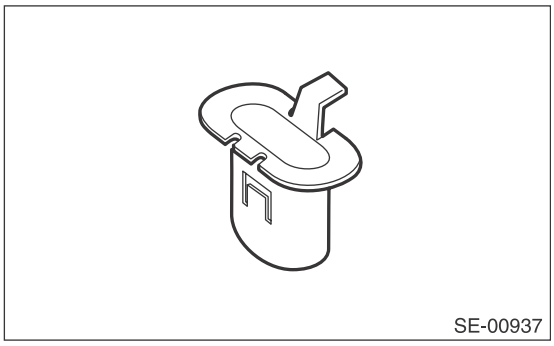

Tightening torque
Front seat belt:<Ref. to SB-2, FRONT SEAT BELT, COMPONENT, General Description.>

22.Rear Quarter Trim

A: REMOVAL

1. SEDAN MODEL

1) Disconnect the ground cable from battery and wait for at least 60 seconds before starting work.

CAUTION:
The airbag system is fitted with a backup power supply. After disconnecting the battery ground cable, the airbag may operate if you do not wait for 60 seconds before starting the service of airbag system.

2) Remove the rear seat cushion assembly.
   (1) Pull up the seat cushion and release the hook.

CAUTION:
If the hook is removed from vehicle body, replace the hook with the new part to avoid the deterioration of seat securing.

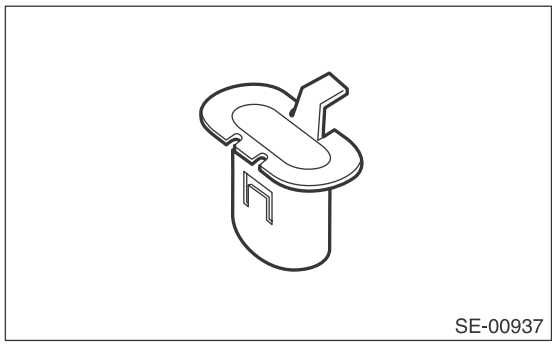
SE-00937

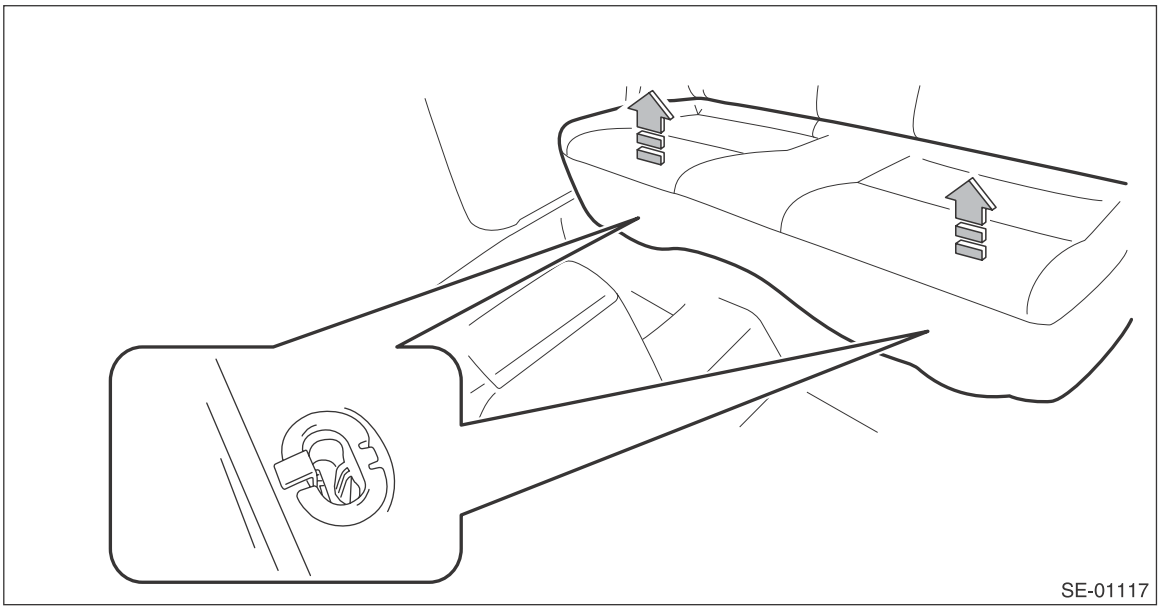
SE-01117

(2) Remove the hook (A) by pushing it back while lifting the front side of the seat cushion, and remove the seat cushion.

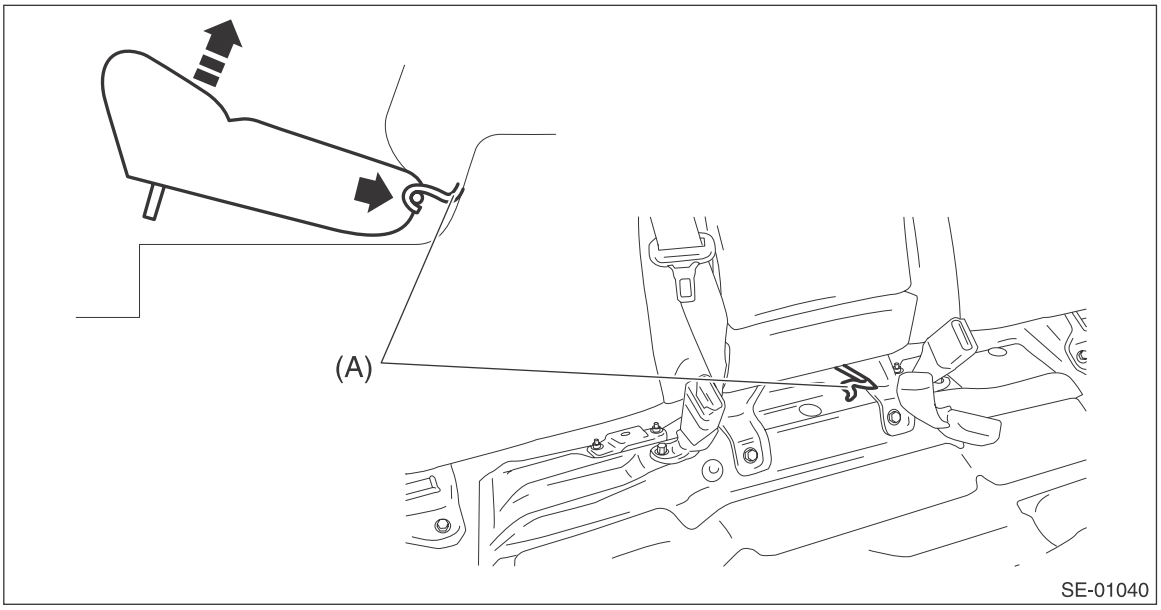

3) Release the clips and claws, and then remove the side sill cover - rear INN.

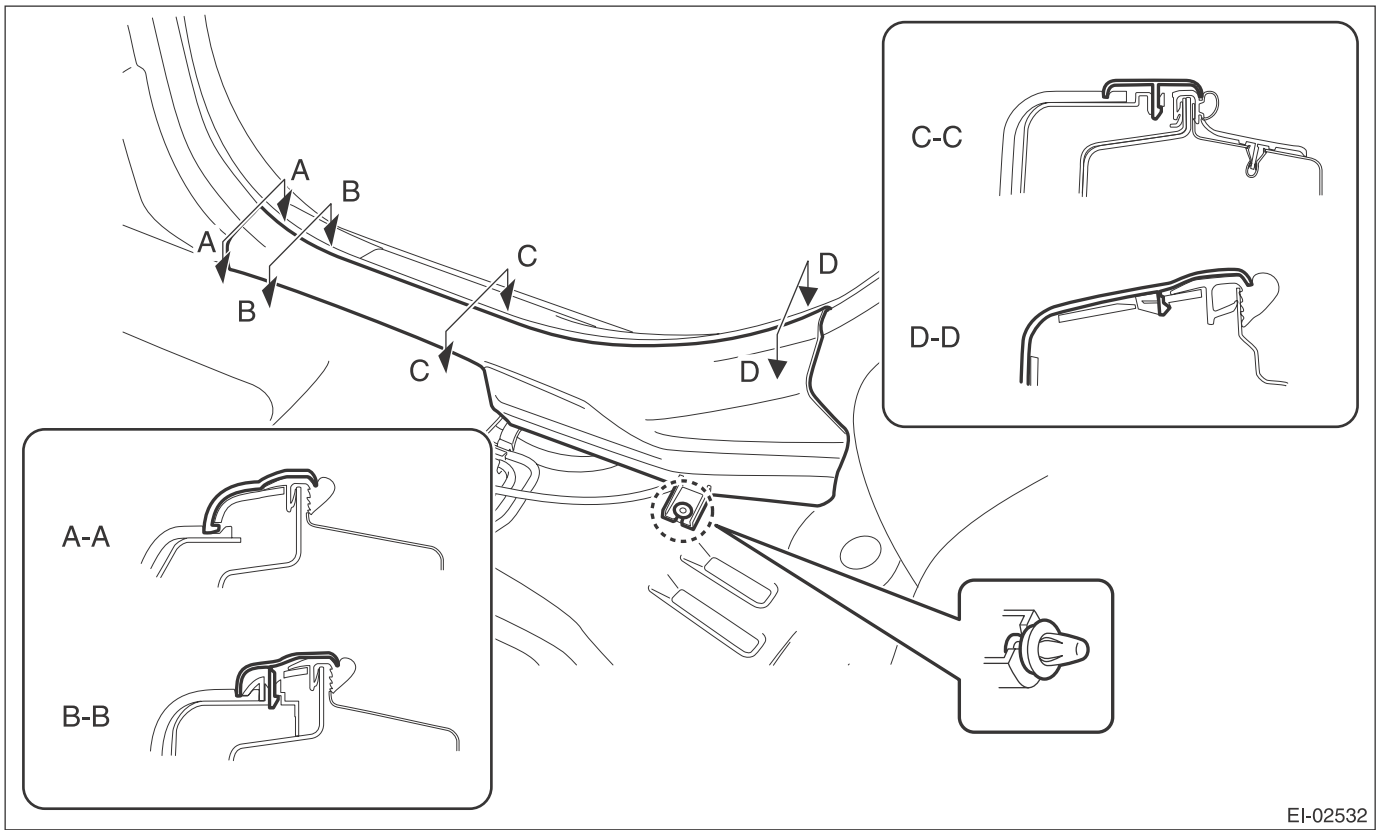

CAUTION:
Do not pull with excessive force. Doing so may damage the claws of the side sill cover INN.

NOTE:
To release the claws of the side sill cover INN, the following steps are recommended.
1. Take out the weather strip from under the side sill cover INN.
2. Turn over the floor mat and release the claws (C) and (D) by accessing from behind the side sill cover INN.

4) Remove the rear quarter trim LWR.
(1) Remove the backrest side pad.
a) Remove the screws.

Preparation tool: Stubby screwdriver

b) Turn over the bottom end of the backrest side pad in the forward direction so that the claws are released.
c) Remove the backrest side pad by pulling it up.

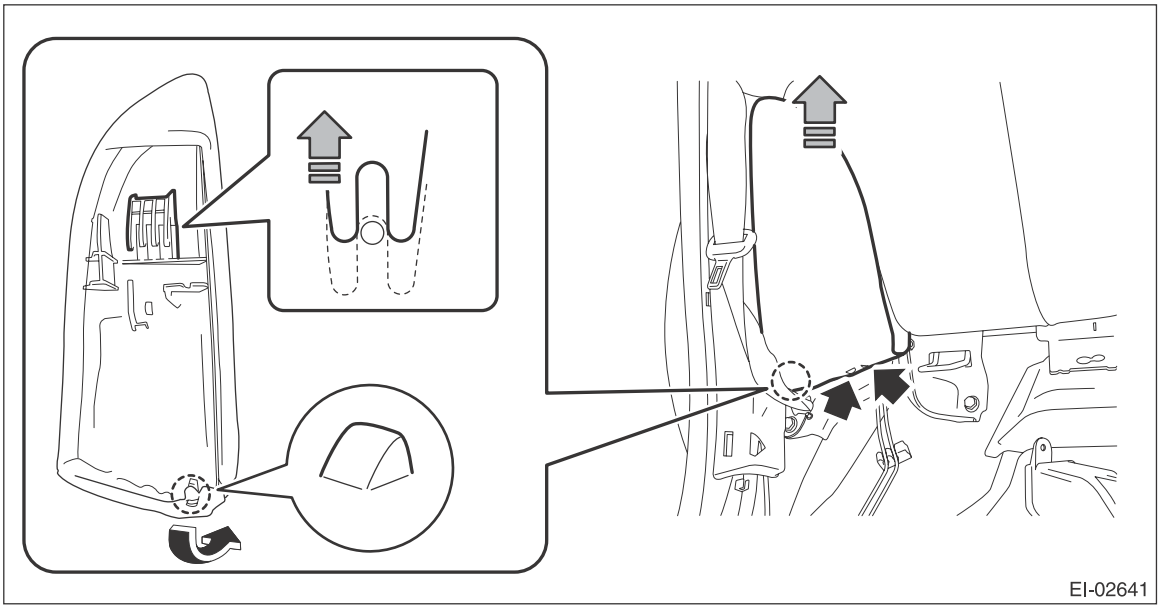

(2) Pull the release lever in the trunk room, and then tilt the backrest forward.

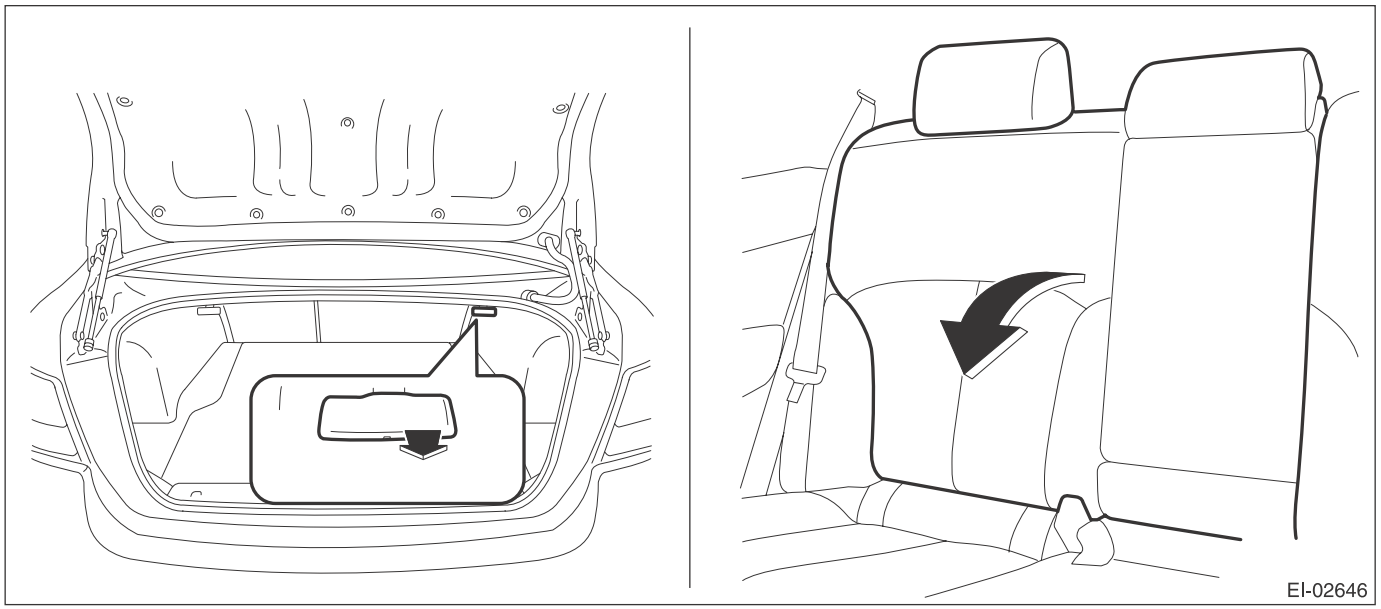

(3) Release the clips of the trunk trim panel assembly-side.

(4) Remove the clips, and remove the rear quarter trim LWR.

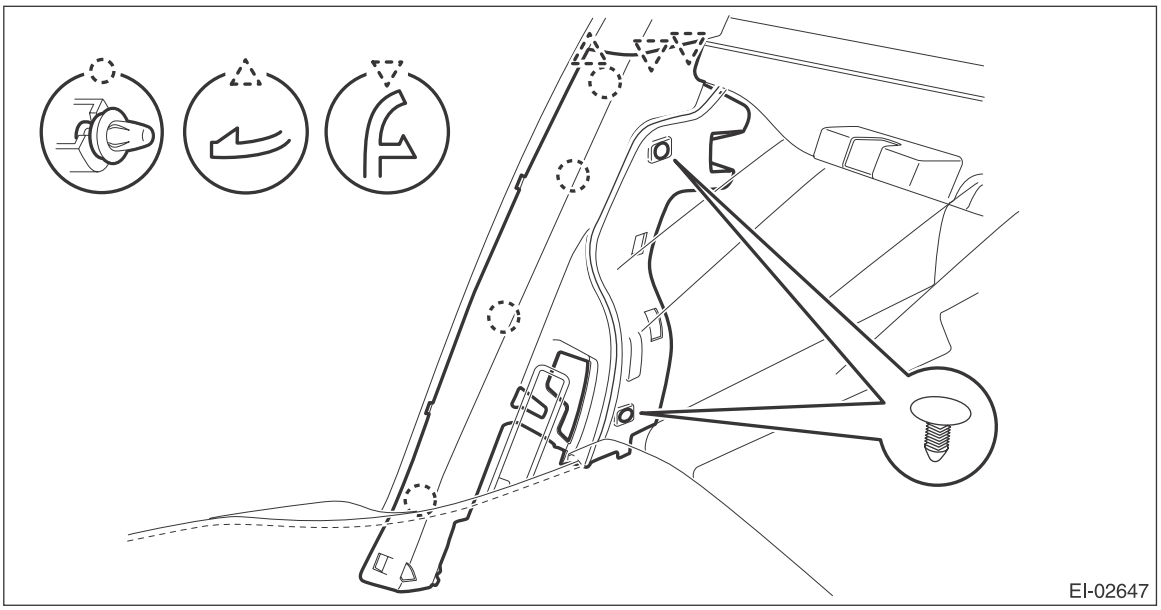

5) Remove the rear quarter trim UPR.

(1) Remove the lower anchor bolt of the outer belt assembly.

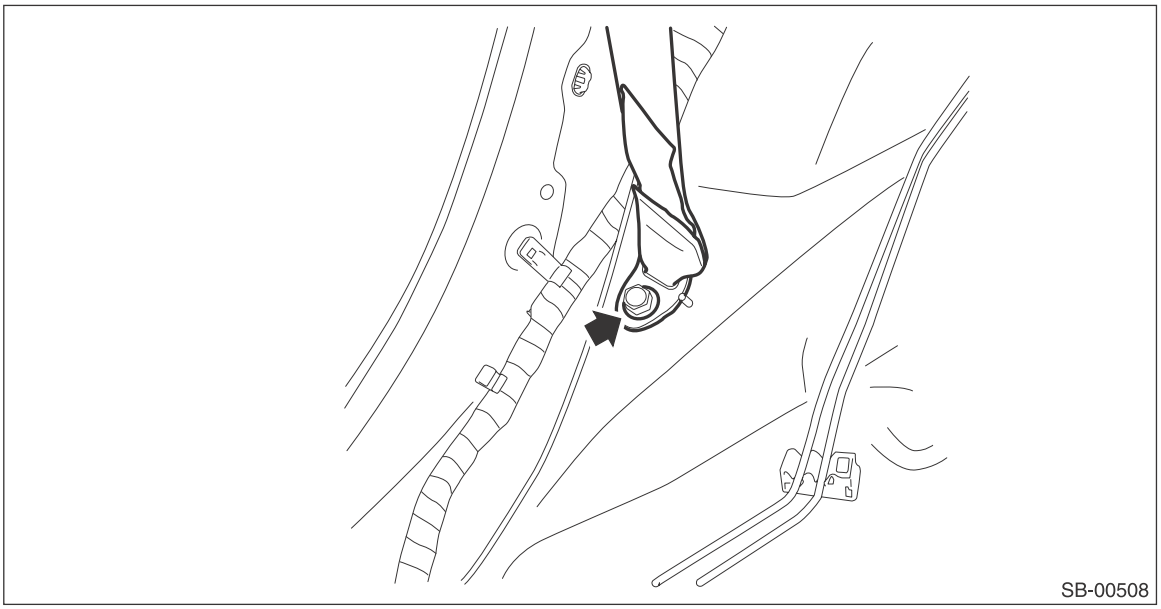

(2) Release the clips, and remove the rear quarter trim UPR.

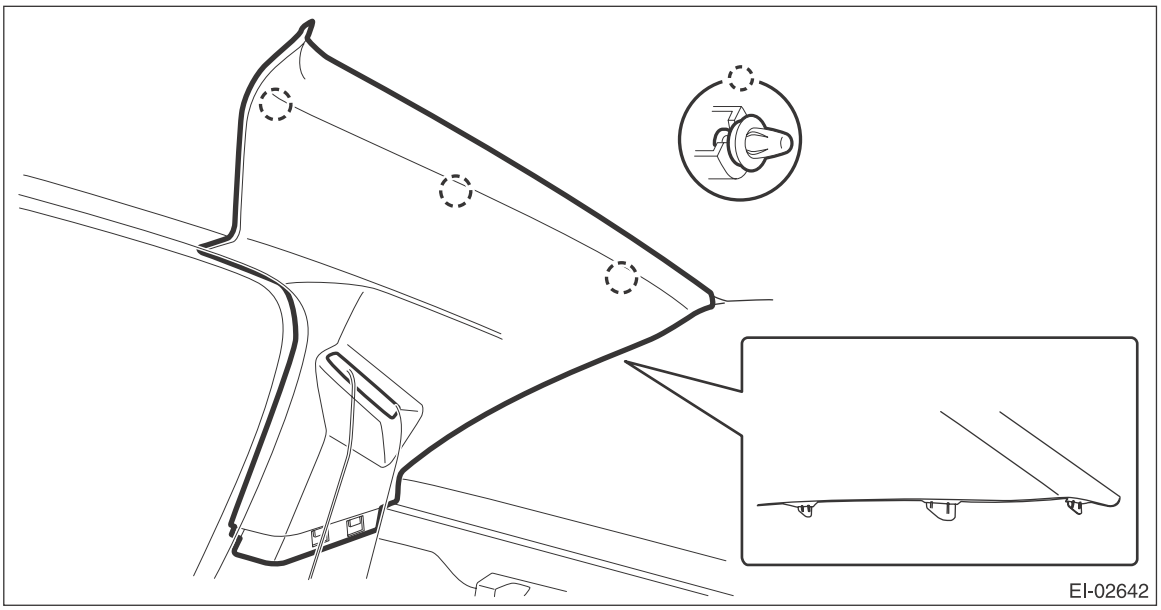

(3) Pull out the seat belt and remove the rear quarter trim UPR.

2. OUTBACK MODEL

1) Disconnect the ground cable from battery and wait for at least 60 seconds before starting work.

CAUTION:
The airbag system is fitted with a backup power supply. After disconnecting the battery ground cable, the airbag may operate if you do not wait for 60 seconds before starting the service of airbag system.

2) Remove the rear seat cushion assembly.
   (1) Pull up the seat cushion and release the hook.

CAUTION:
If the hook is removed from vehicle body, replace the hook with the new part to avoid the deterioration of seat securing.

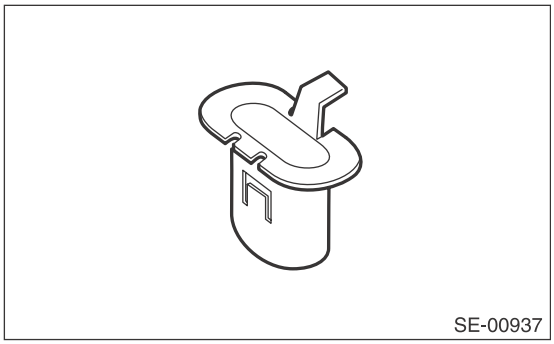
SE-00937

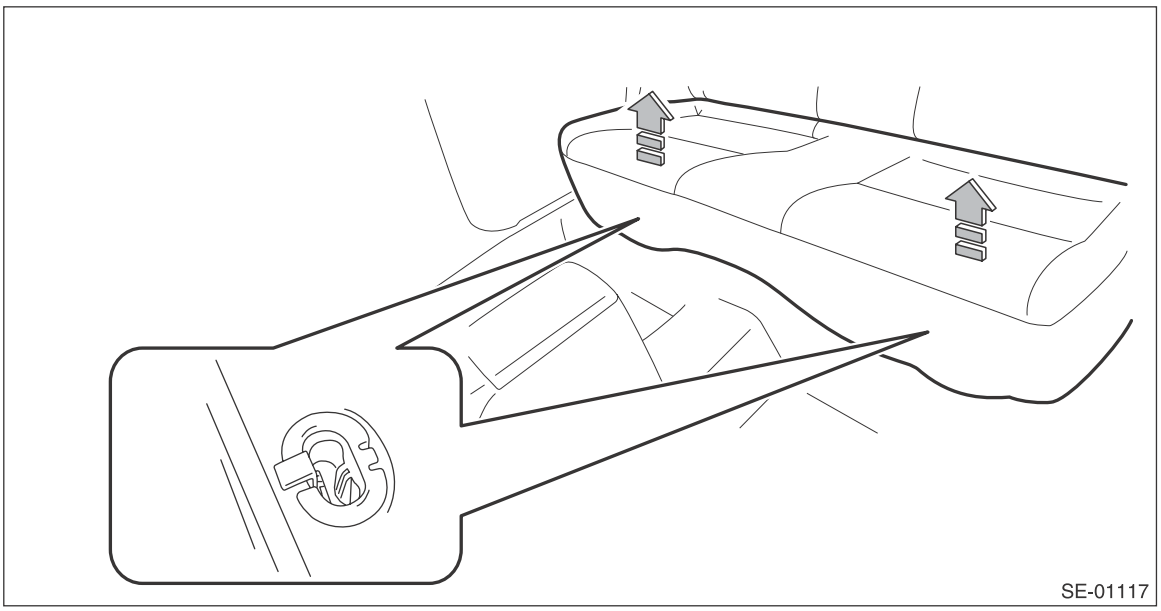
SE-01117

(2) Remove the hook (A) by pushing it back while lifting the front side of the seat cushion, and remove the seat cushion.

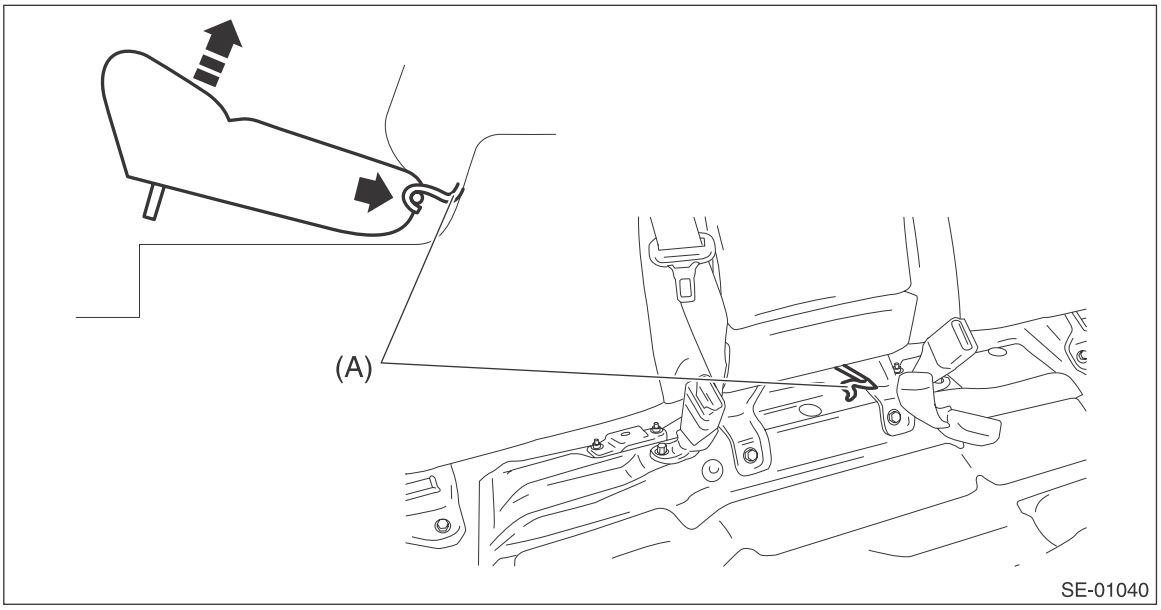

3) Release the clips and claws, and then remove the side sill cover - rear INN.

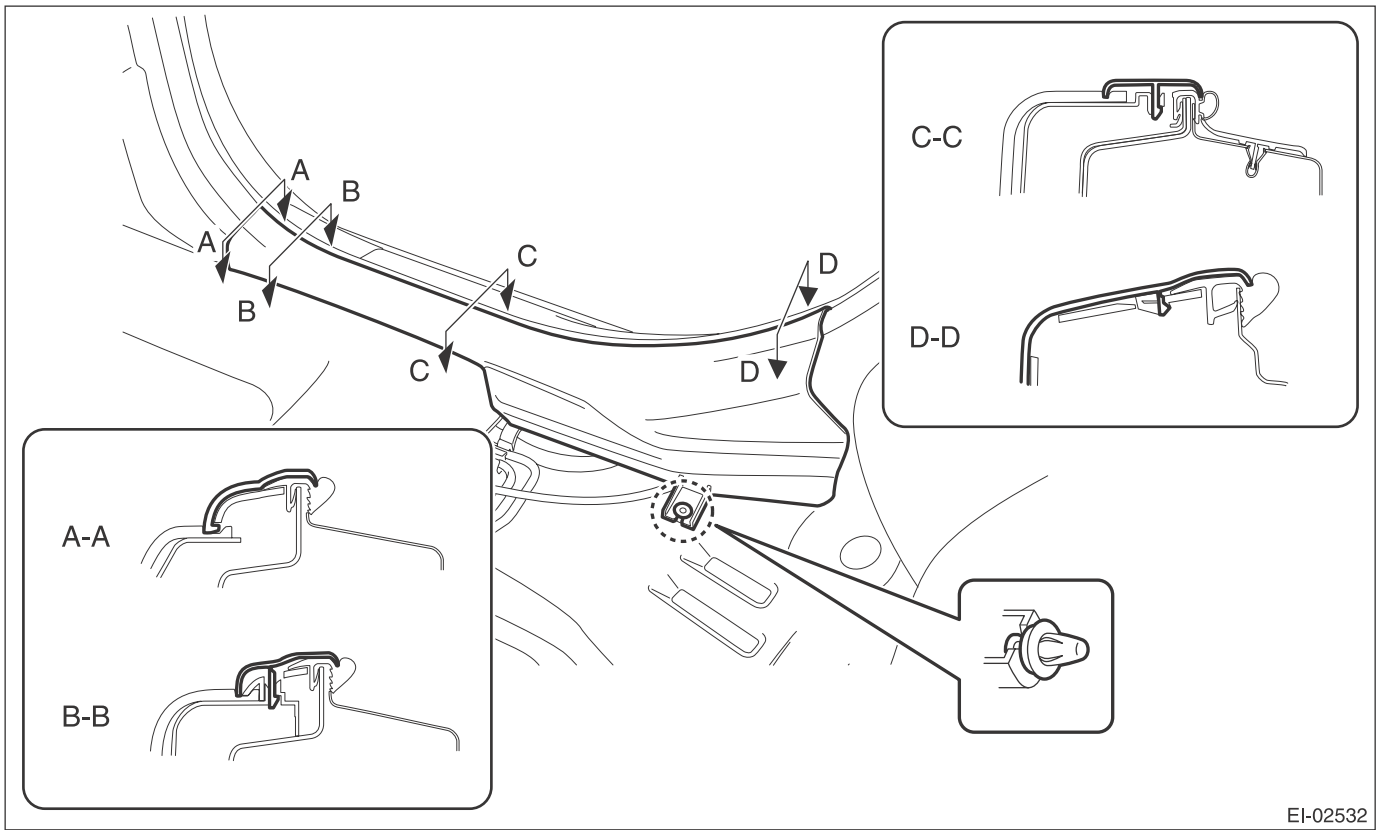

CAUTION:
Do not pull with excessive force. Doing so may damage the claws of the side sill cover INN.

NOTE:
To release the claws of the side sill cover INN, the following steps are recommended.
1. Take out the weather strip from under the side sill cover INN.
2. Turn over the floor mat and release the claws (C) and (D) by accessing from behind the side sill cover INN.

4) Tilt the backrest forward, and then turn over the backrest backside mat.

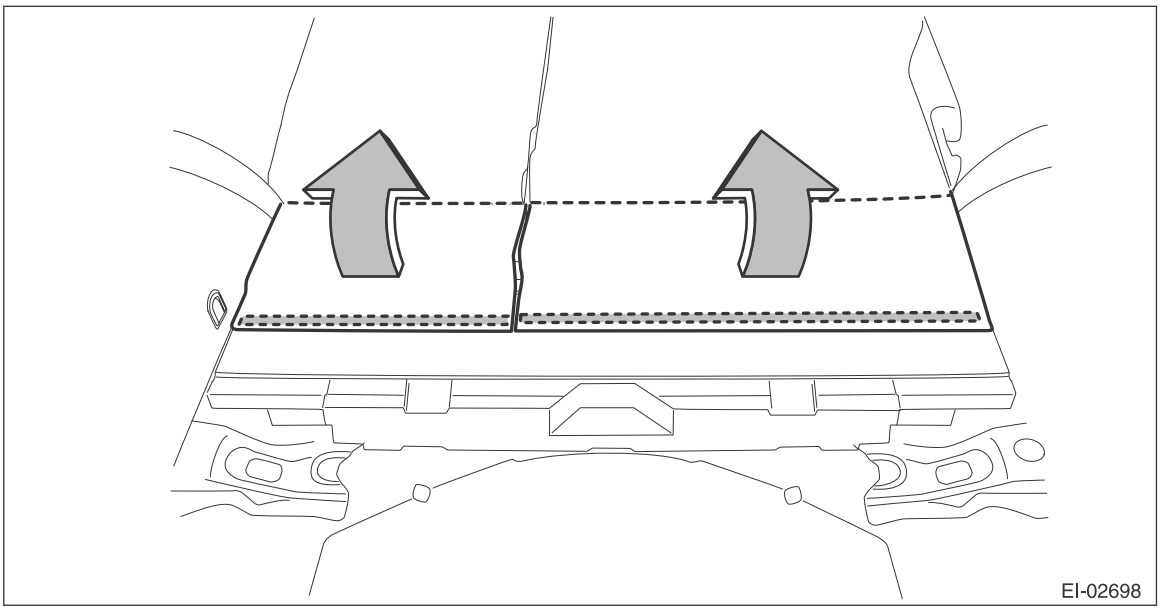

5) Remove the backrest side pad assembly.
   (1) Disconnect the backrest cable and reclining lever cable.
   (2) Remove the screws and remove the reclining lever assembly by pulling it downward.

Preparation tool: Stubby screwdriver

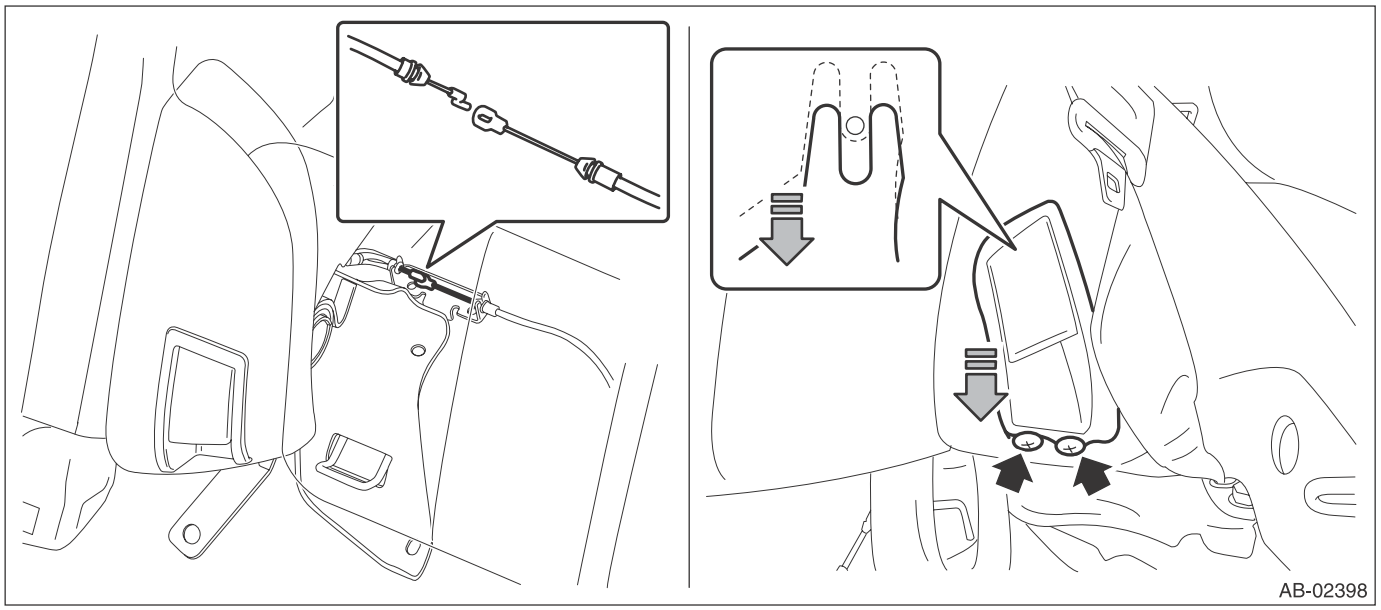

   (3) Turn over the bottom end of the backrest side pad in the forward direction so that the claws are released.

(4) Remove the backrest side pad by pulling it up.

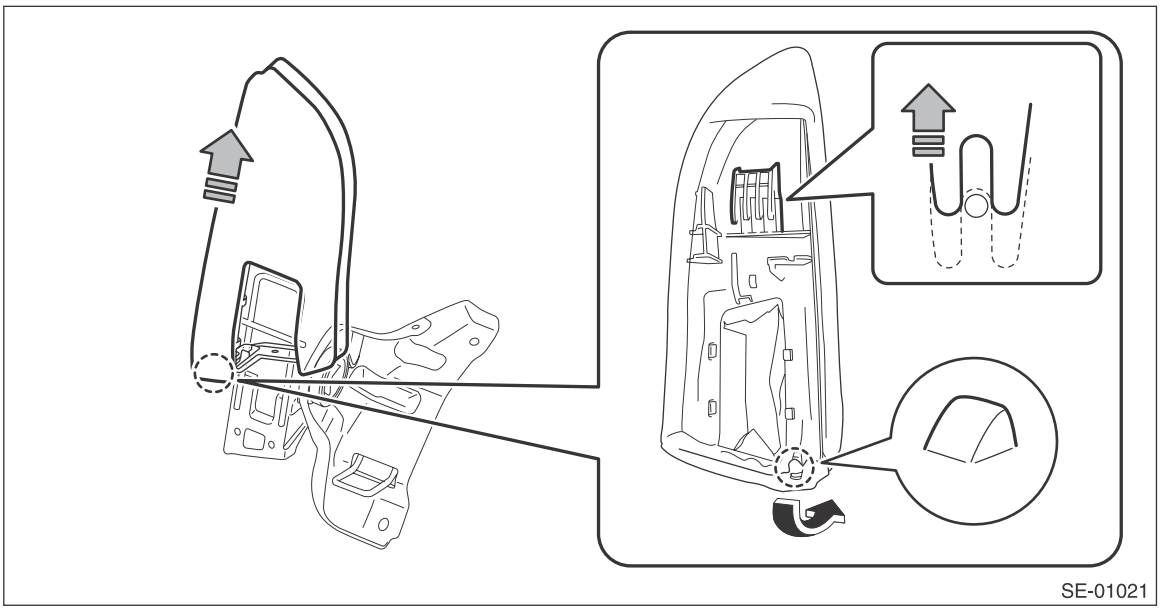

6) Remove the clips, and remove the luggage floor box and rear floor edge cover.

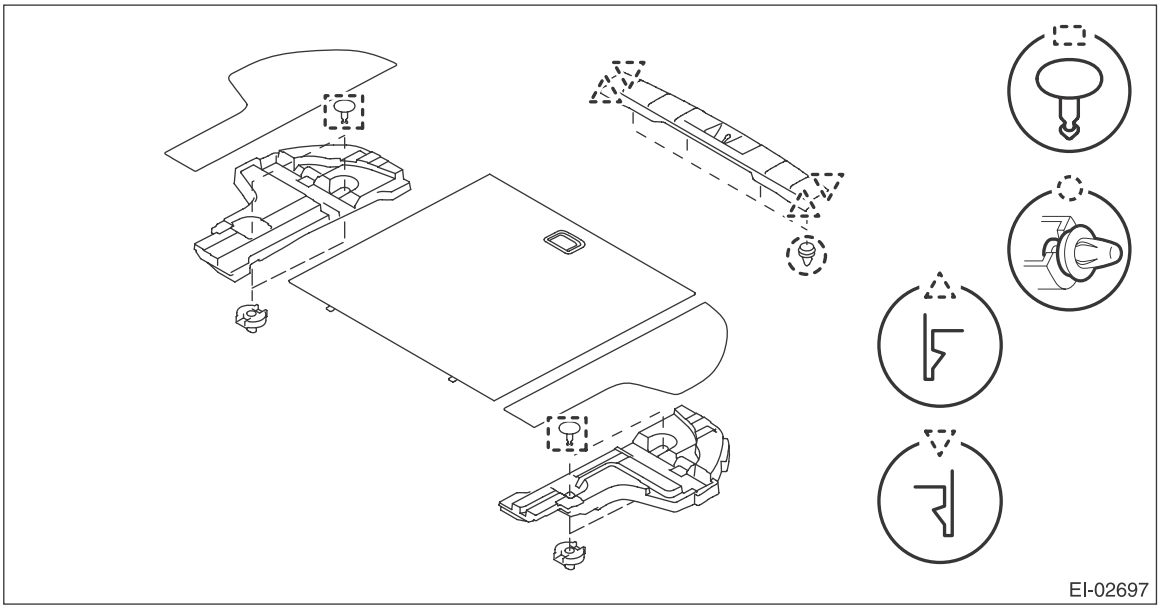

7) Remove the rear quarter trim LWR.
(1) Remove the caps, screws, and bolts. (A), (C)
(2) Take out the hook and remove the screw inside. (B)

(3) Remove the clips, and remove the rear quarter trim LWR.

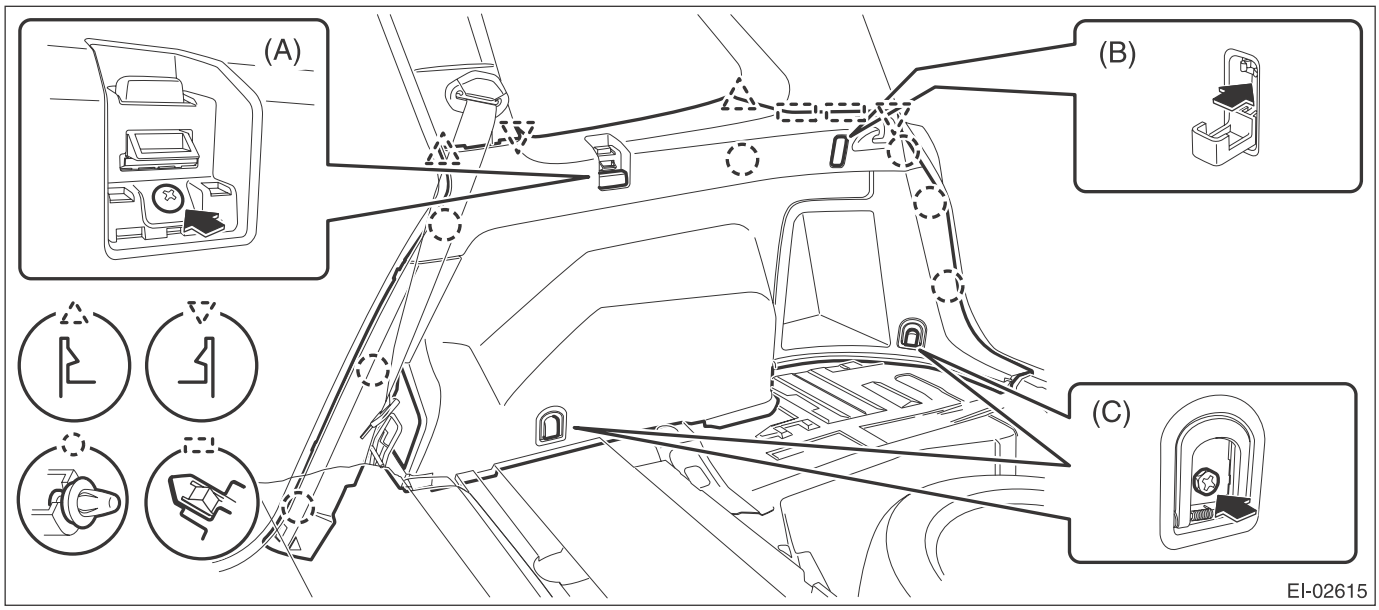

8) Remove the rear quarter trim UPR.
(1) Open the cap and remove the bolt to remove the seat belt anchor.
(2) Remove the clips, and remove the rear quarter trim UPR-front.
(3) Remove the clips, and remove the rear quarter trim UPR-rear.

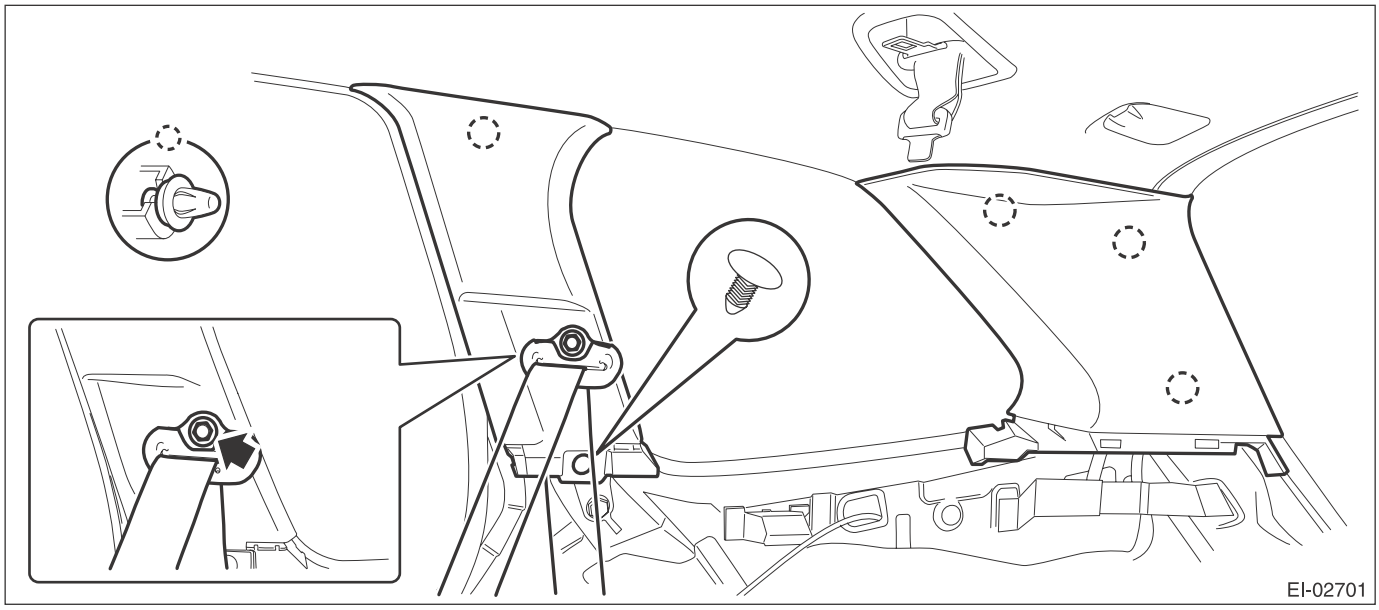

B: INSTALLATION

Install each part in the reverse order of removal.

CAUTION:
If the hook is removed from vehicle body, replace the hook with the new part to avoid the deterioration of seat securing.

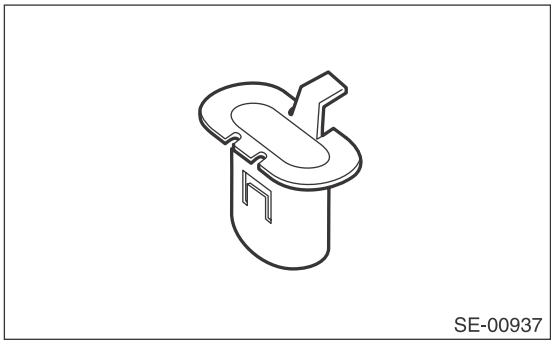

Tightening torque:
Sedan model
Rear seat belt:<Ref. to SB-3, REAR SEAT BELT (SEDAN MODEL), COMPONENT, General Description.>
OUTBACK model
Rear seat belt:<Ref. to SB-4, REAR SEAT BELT (OUTBACK MODEL), COMPONENT, General Description.>

23.Rear Shelf Trim

A: REMOVAL

1) Disconnect the ground cable from battery and wait for at least 60 seconds before starting work.

CAUTION:
The airbag system is fitted with a backup power supply. After disconnecting the battery ground cable, the airbag may operate if you do not wait for 60 seconds before starting the service of airbag system.

2) Remove the rear seat cushion assembly.
   (1) Pull up the seat cushion and release the hook.

CAUTION:
If the hook is removed from vehicle body, replace the hook with the new part to avoid the deterioration of seat securing.

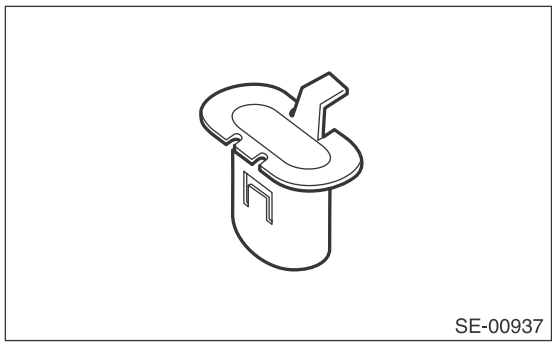
SE-00937

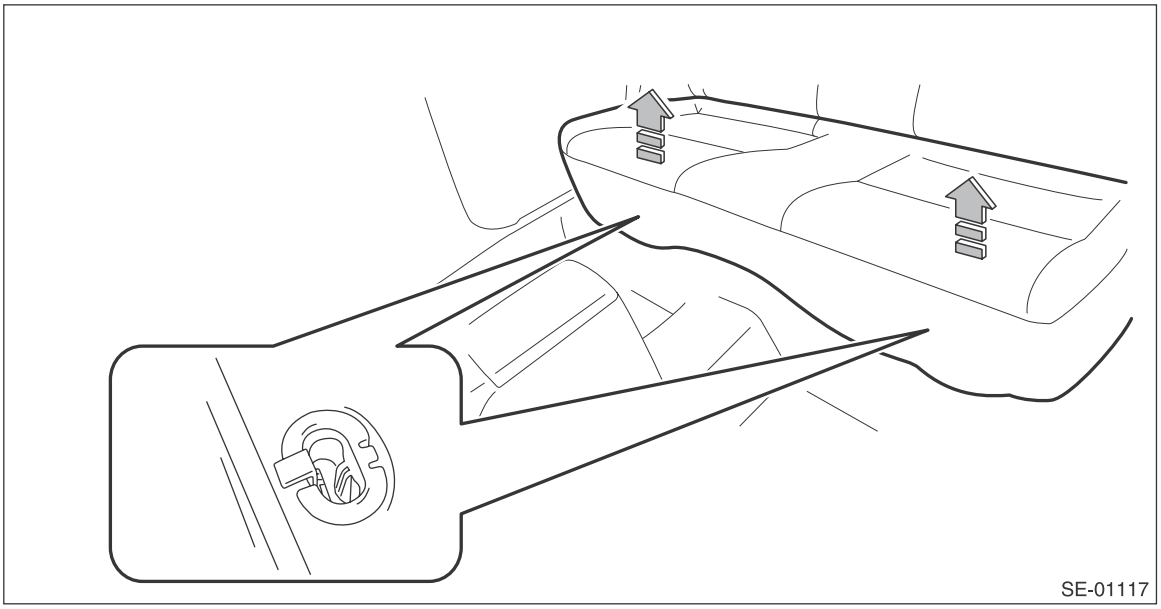
SE-01117

(2) Remove the hook (A) by pushing it back while lifting the front side of the seat cushion, and remove the seat cushion.

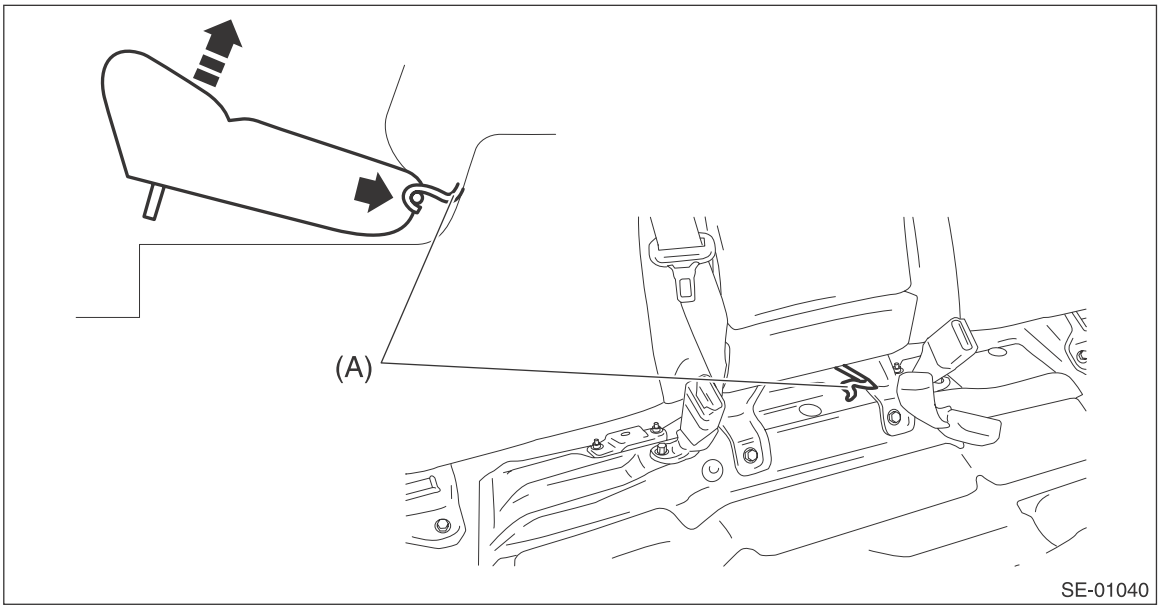

3) Release the clips and claws, and then remove the left and right side sill covers-rear INN.

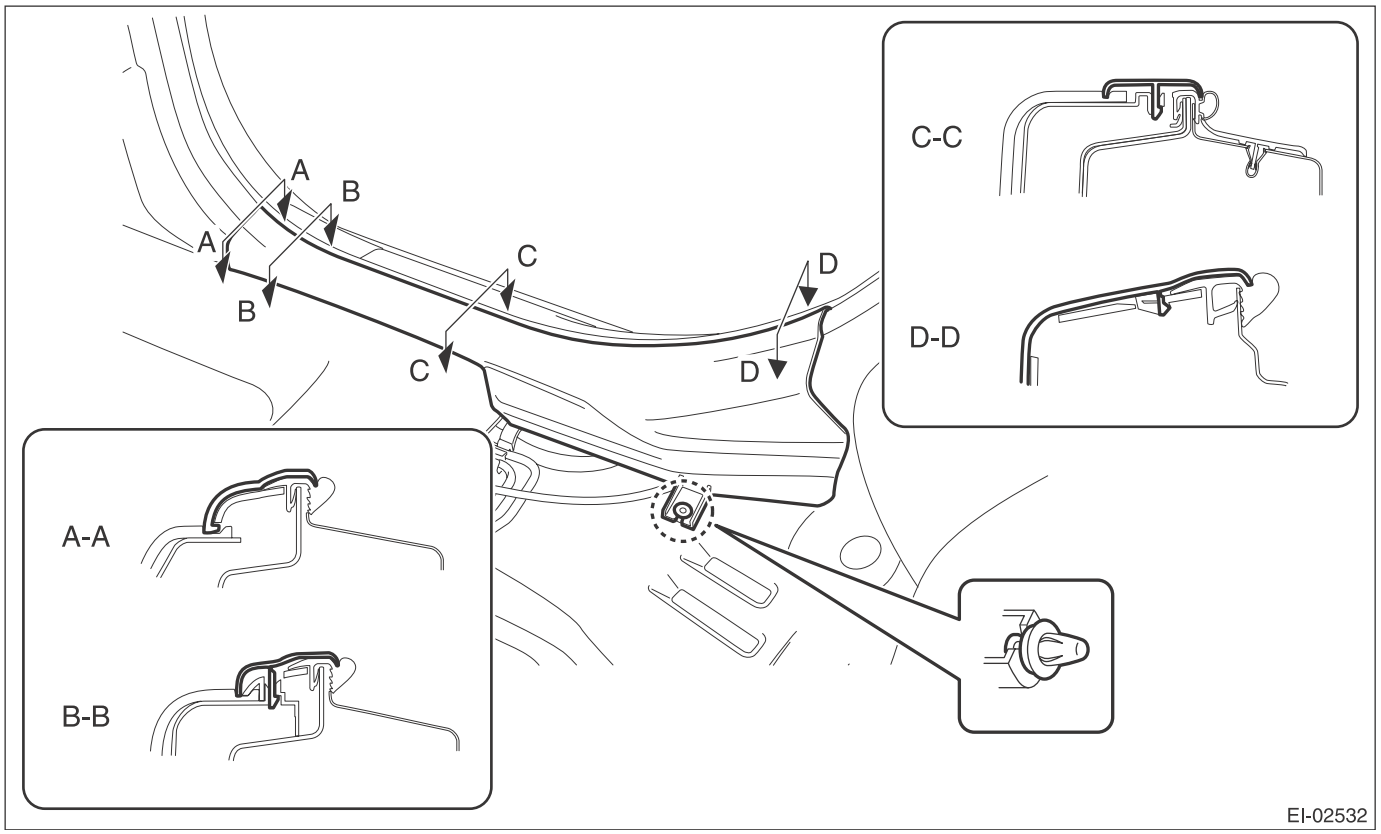

CAUTION:
Do not pull with excessive force. Doing so may damage the claws of the side sill cover INN.

NOTE:
To release the claws of the side sill cover INN, the following steps are recommended.
1. Take out the weather strip from under the side sill cover INN.
2. Turn over the floor mat and release the claws (C) and (D) by accessing from behind the side sill cover INN.

4) Remove the left and right rear quarter trim LWR.
(1) Remove the backrest side pad.
a) Remove the screws.

Preparation tool: Stubby screwdriver

b) Turn over the bottom end of the backrest side pad in the forward direction so that the claws are released.
c) Remove the backrest side pad by pulling it up.

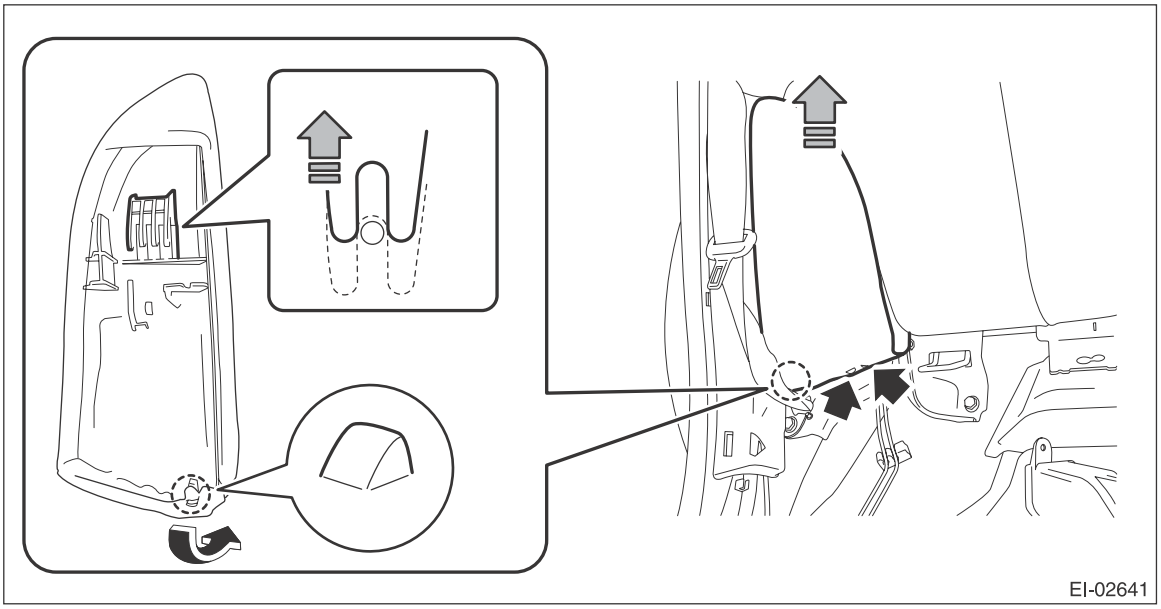

(2) Pull the release lever in the trunk room, and then tilt the backrest forward.

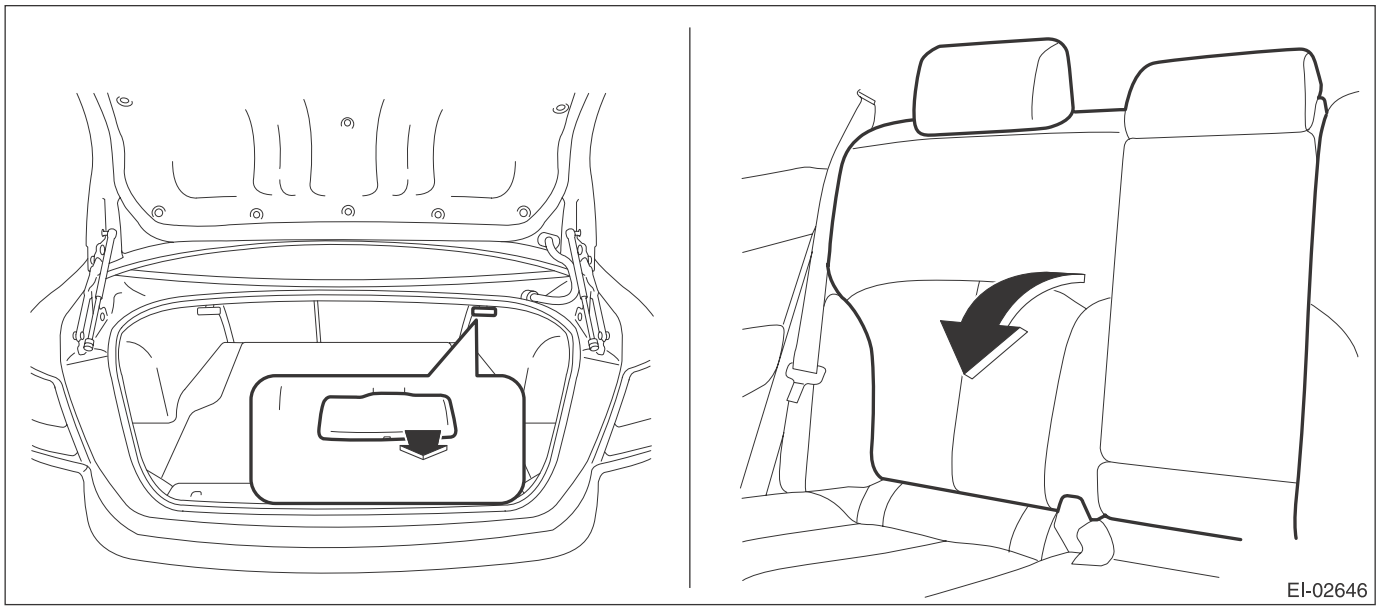

(3) Release the clips of the trunk trim panel assembly-side.

(4) Remove the clips, and remove the rear quarter trim LWR.

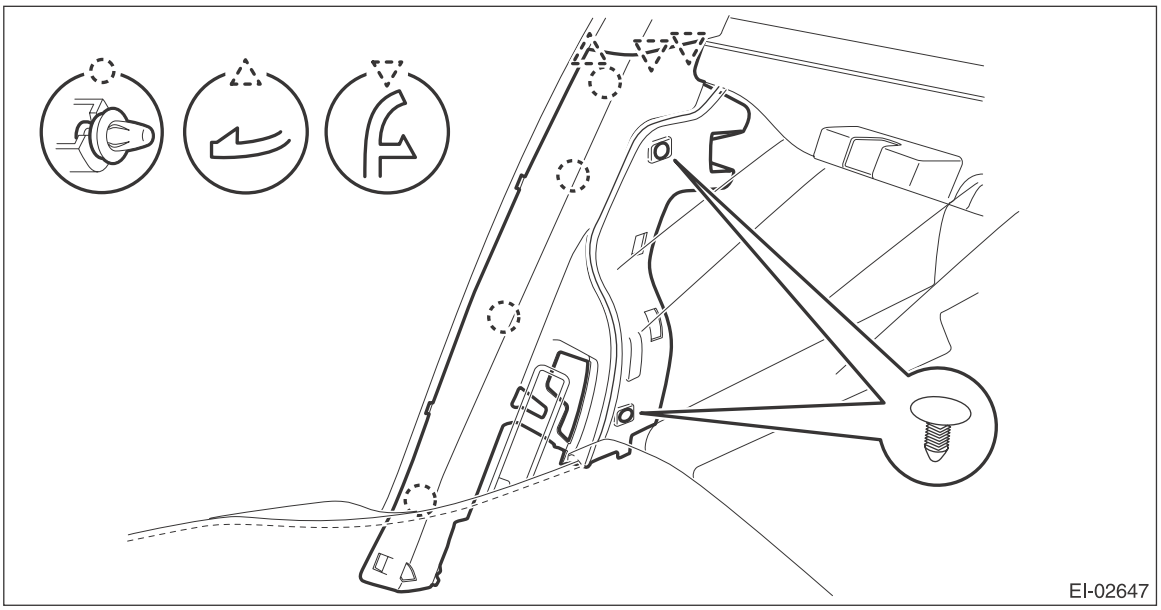

5) Remove the left and right rear quarter trim UPR.

(1) Remove the lower anchor bolt of the outer belt assembly.

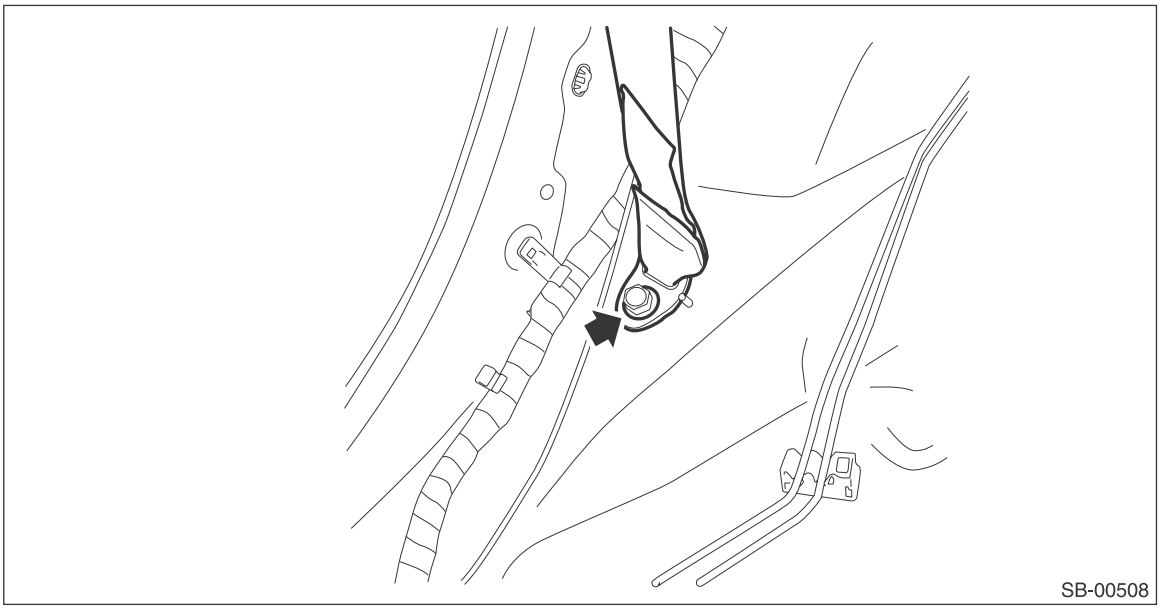

(2) Release the clips, and remove the rear quarter trim UPR.

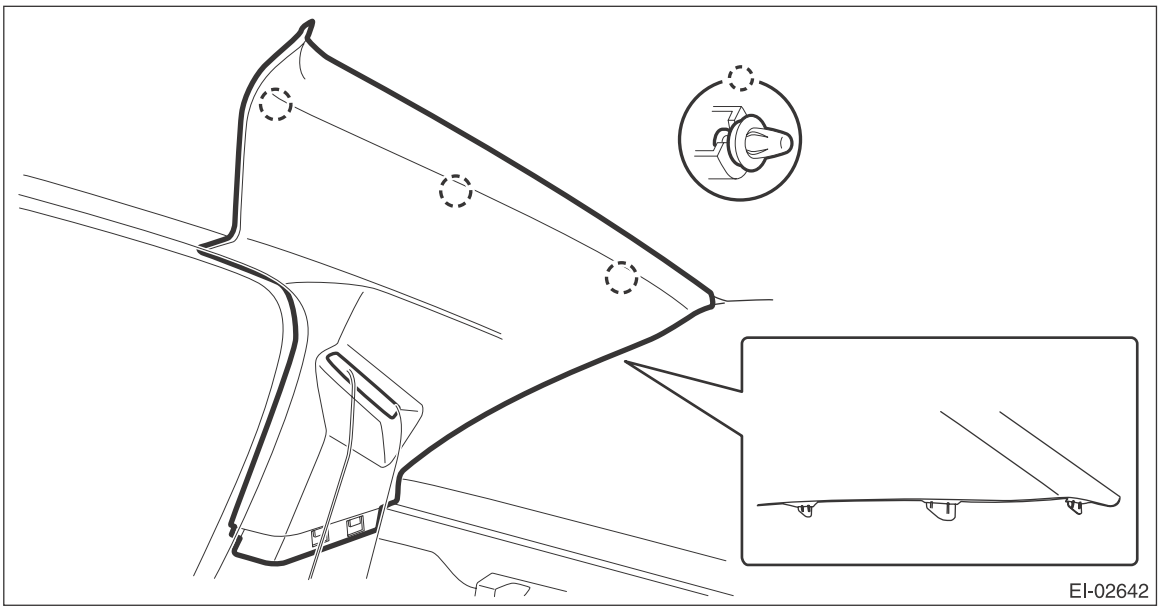

(3) Pull out the seat belt and remove the rear quarter trim UPR.

6) Release the clips and remove the left and right trunk trim panel assembly-front.

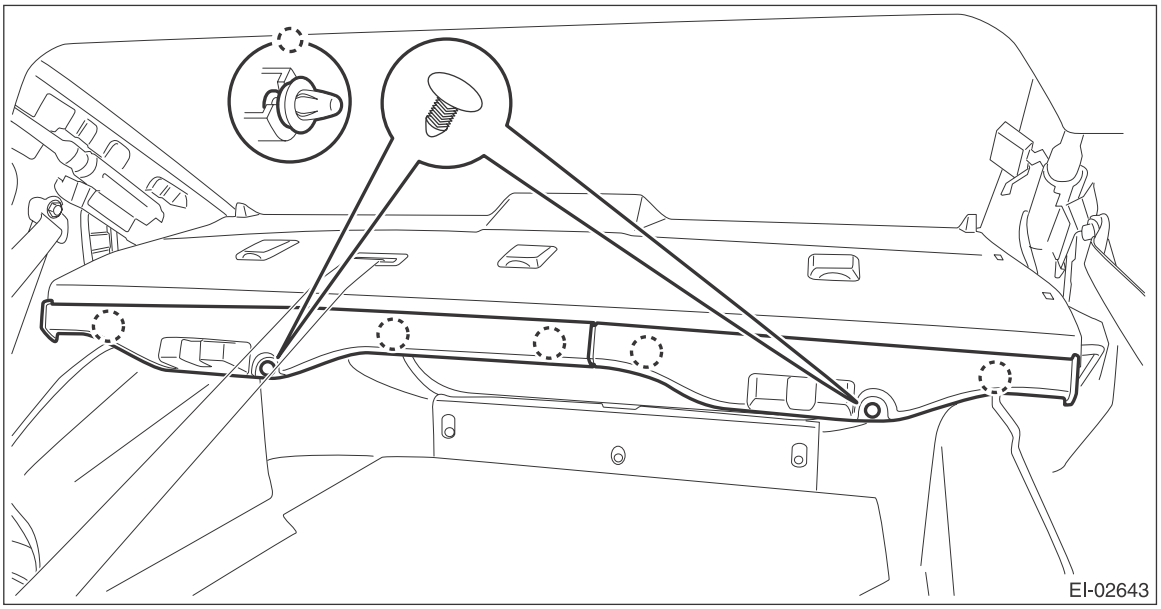

7) Remove the lower anchor of the shoulder belt assembly CTR.
(1) Remove the nuts and remove the ISO-FIX anchor.
(2) Remove the bolts, and remove the lower anchor of shoulder belt assembly CTR.

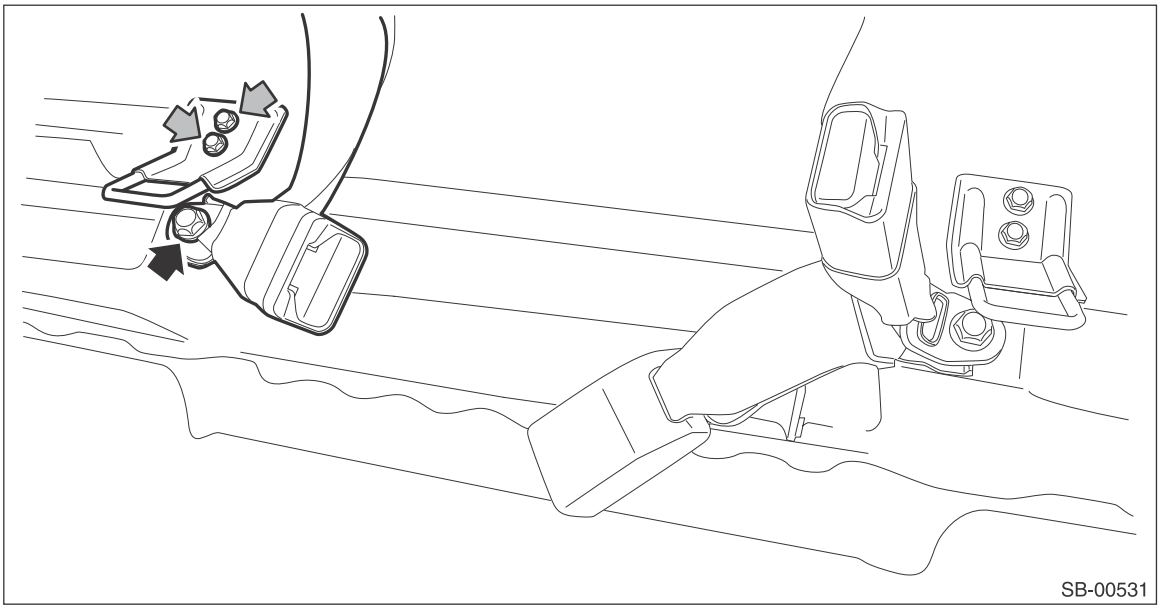

8) Remove the rear shelf panel assembly.
(1) Release the clips to float the rear shelf panel assembly.
(2) Release the belt guide and guide the anchor of rear center seat belt to behind the shelf panel.
(3) Disconnect the connector of high-mounted stop light.
(4) Remove the rear shelf panel assembly.

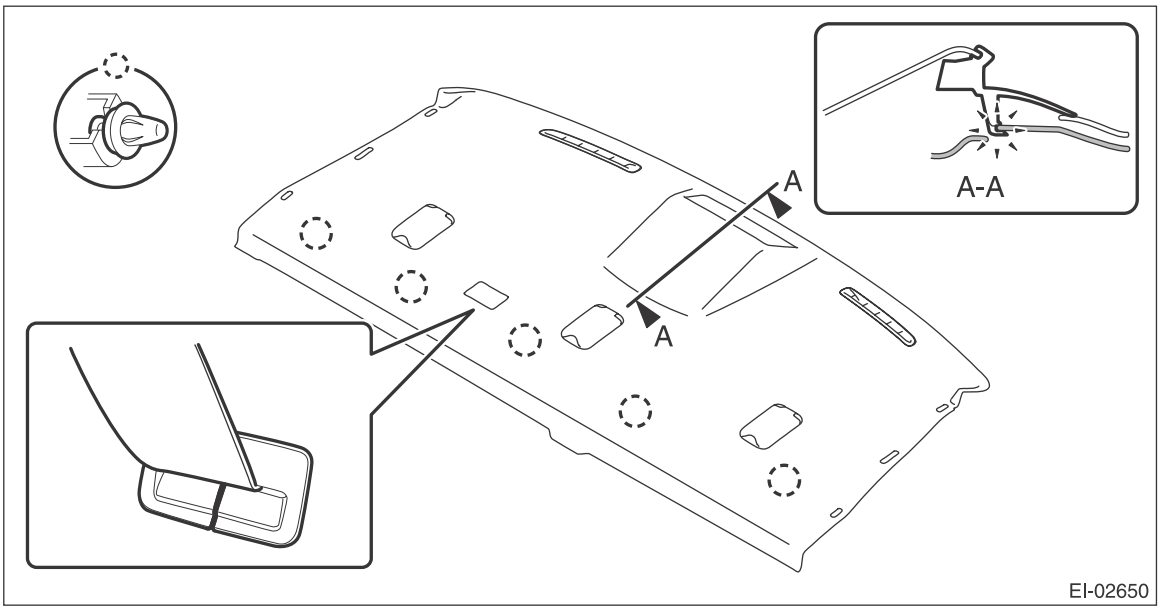

B: INSTALLATION

Install each part in the reverse order of removal.

CAUTION:
- **Make sure to insert the claws on the back of high-mounted stop light into the rear shelf panel.**
- **If the hook is removed from vehicle body, replace the hook with the new part to avoid the deterioration of seat securing.**

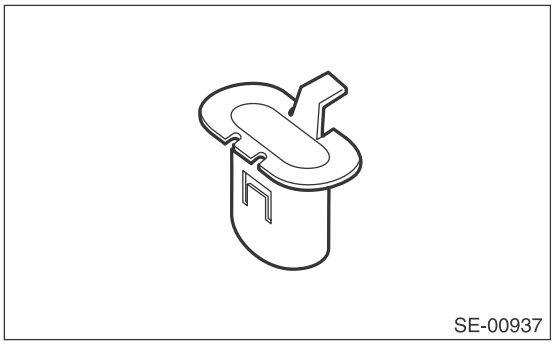

- **Make sure to insert the claws on the back of high-mounted stop light into the rear shelf panel.**

Tightening torque:
ISO-FIX anchor: 25 N·m (2.55 kgf-m, 18.4 ft-lb)
Rear seat belt:<Ref. to SB-3, REAR SEAT BELT (SEDAN MODEL), COMPONENT, General Description.>

24. Trunk Room Trim

A: REMOVAL

1. TRUNK LID TRIM

1) Open the trunk lid.
2) Remove the trunk handle.
3) Remove the clips and the trunk lid trim.

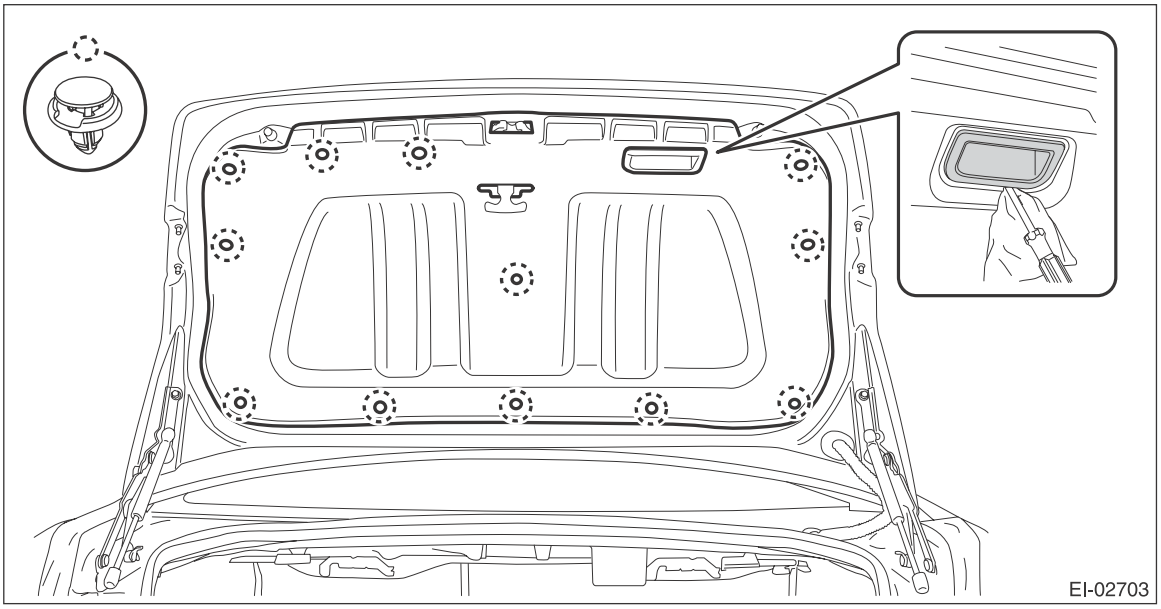

2. TRUNK ROOM TRIM

1) Pull the release lever in the trunk room, and then tilt the backrest forward.

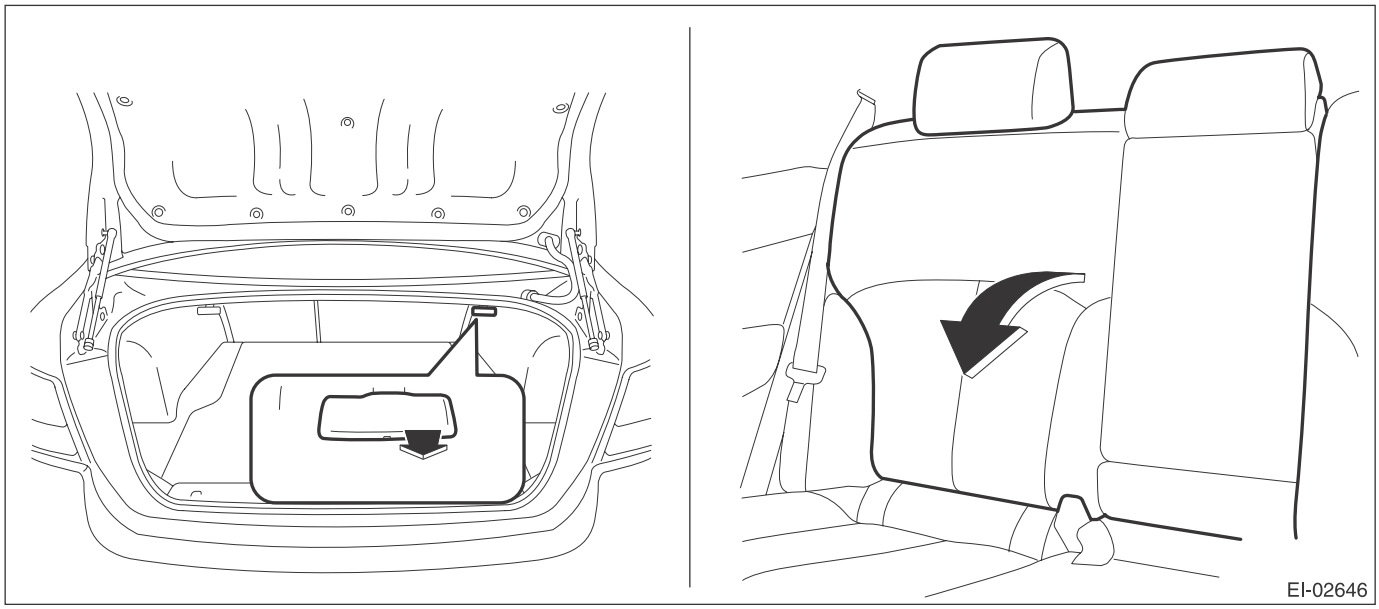

2) Remove the trunk room mat.
3) Remove the trunk trim assembly-rear.
   (1) Remove the clip.

(2) Release the claws, and remove the trunk trim assembly-rear.

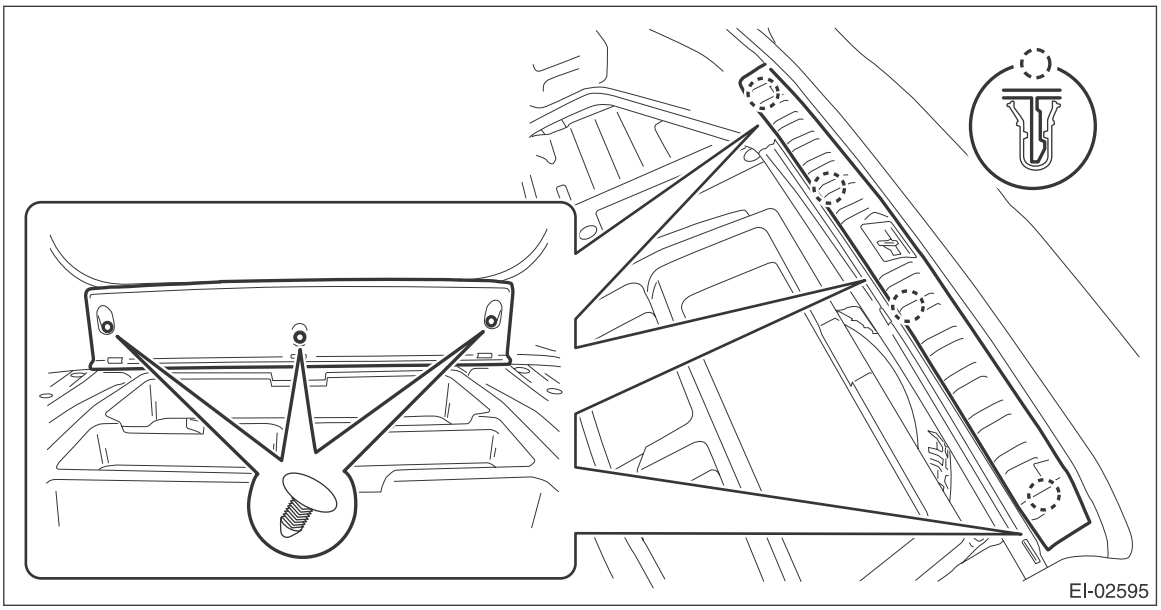

4) Remove the trunk trim panel assembly-side.
(1) Remove the hook.
a) Turn the hook to 90°.
b) Press the claw using a screwdriver to detach the hook.
(2) Release the clips and remove the trunk trim panel assembly-side.

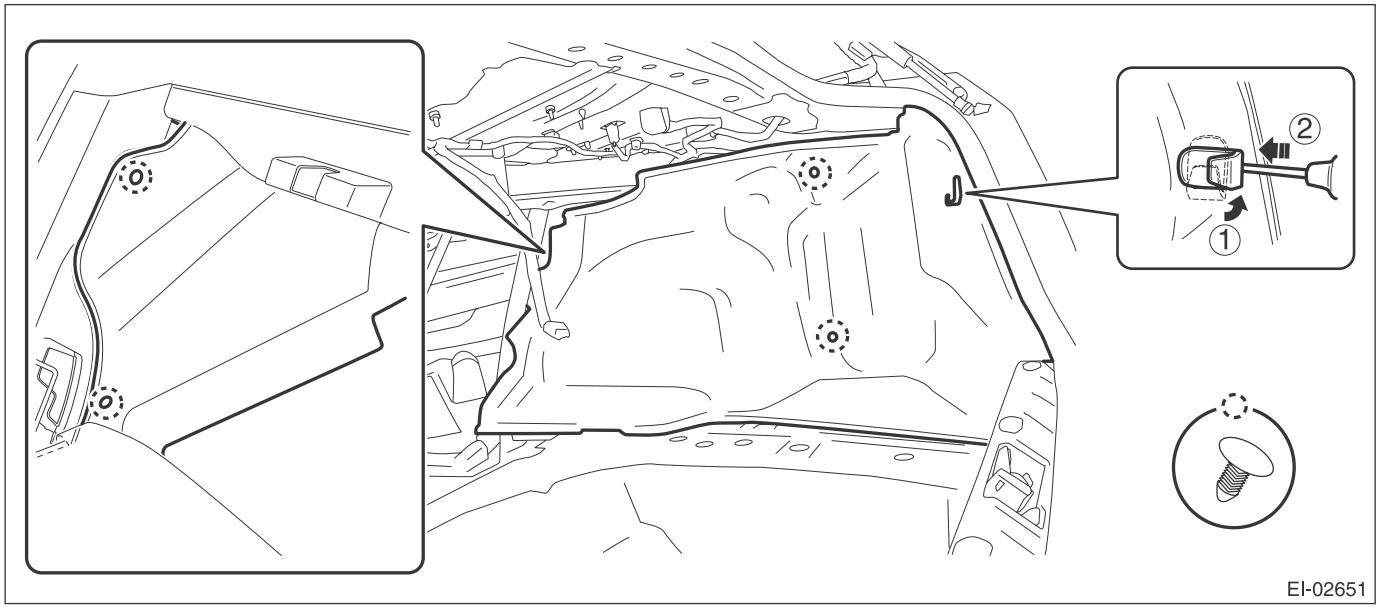

B: INSTALLATION

Install each part in the reverse order of removal.

25.Sun Visor

A: REMOVAL

1) Remove the cover, loosen the screws, and remove the sun visor assembly.
2) Remove the sun visor hook.
   (1) Press both sides using a flat tip screwdriver.
   (2) Remove the sun visor hook by pulling toward you.

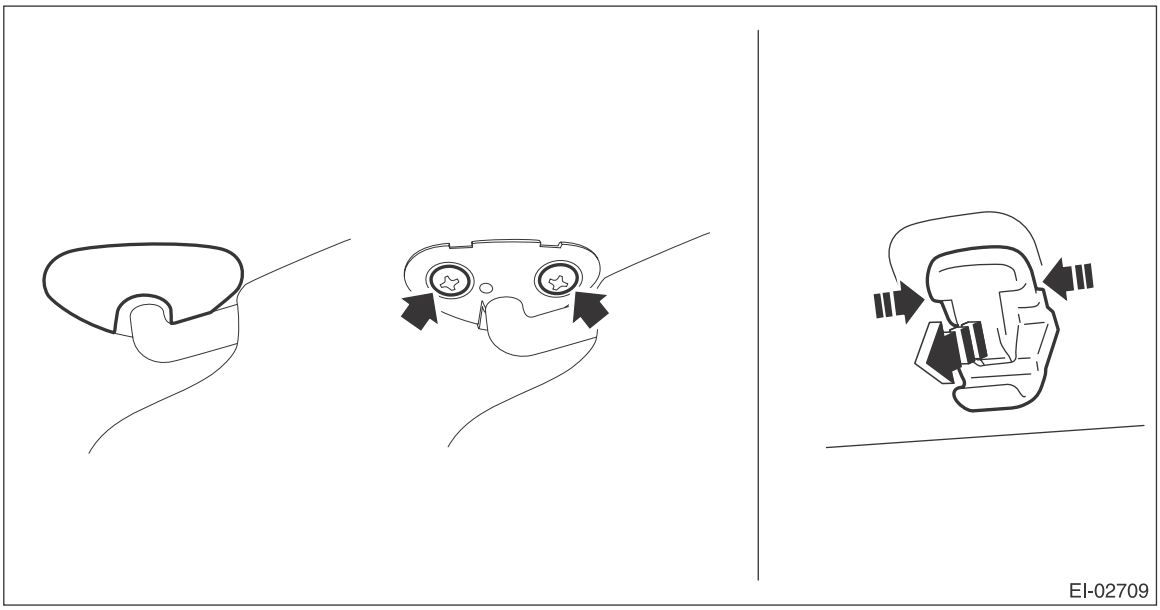

B: INSTALLATION

Install each part in the reverse order of removal.

26. Assist Grip

A: REMOVAL

Remove the assist grip assembly.
1) Remove the cap (a) by pulling the both sides of the cap (a) using a flat tip screwdriver wrapped with a protection tape.
2) Pull the assist grip toward you (to the vehicle center) and remove the metal clip from the bracket.

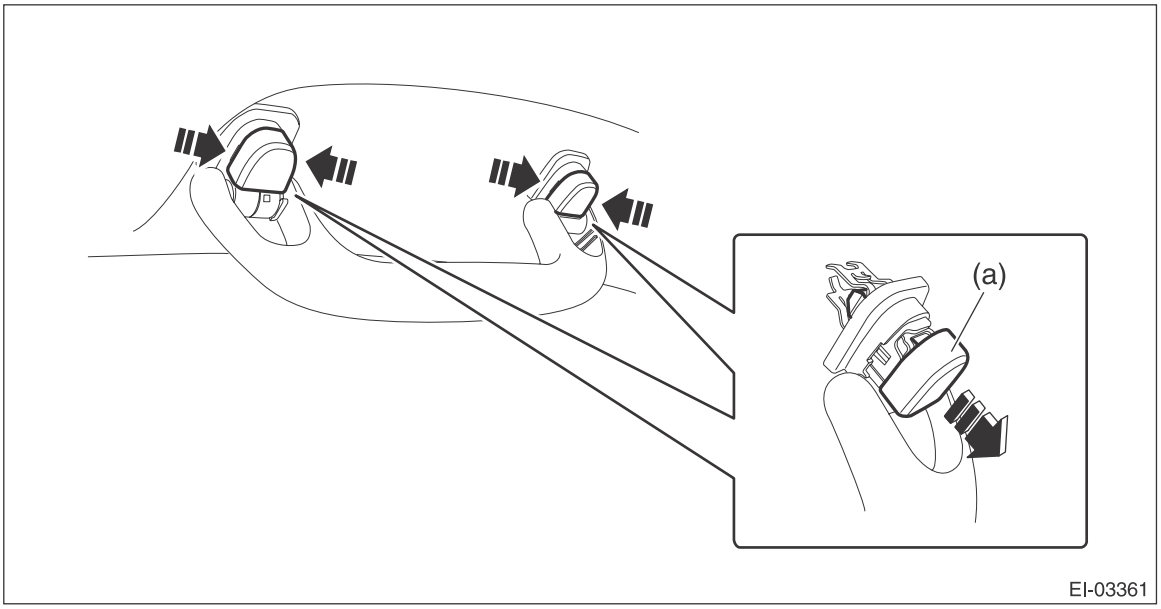

B: INSTALLATION

Install each part in the reverse order of removal.

27.Roof Trim

A: REMOVAL

1. SEDAN MODEL

1) Remove the rear seat cushion assembly.
   (1) Pull up the seat cushion and release the hook.

CAUTION:
If the hook is removed from vehicle body, replace the hook with the new part to avoid the deterioration of seat securing.

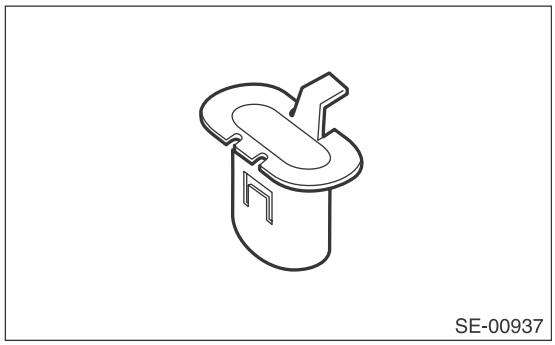
SE-00937

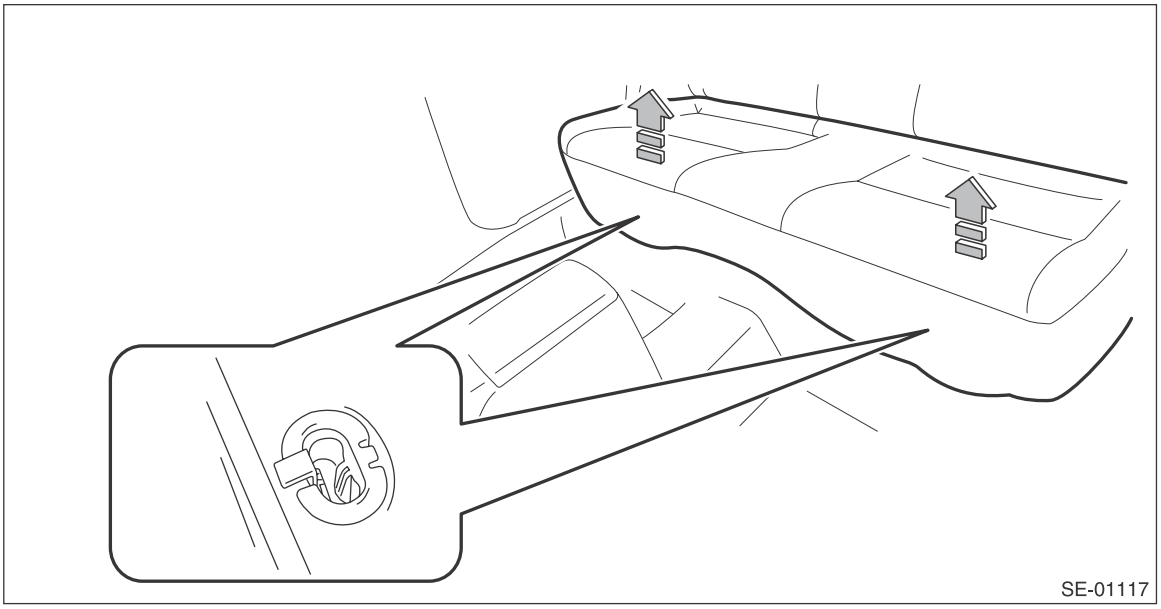
SE-01117

(2) Remove the hook (A) by pushing it back while lifting the front side of the seat cushion, and remove the seat cushion.

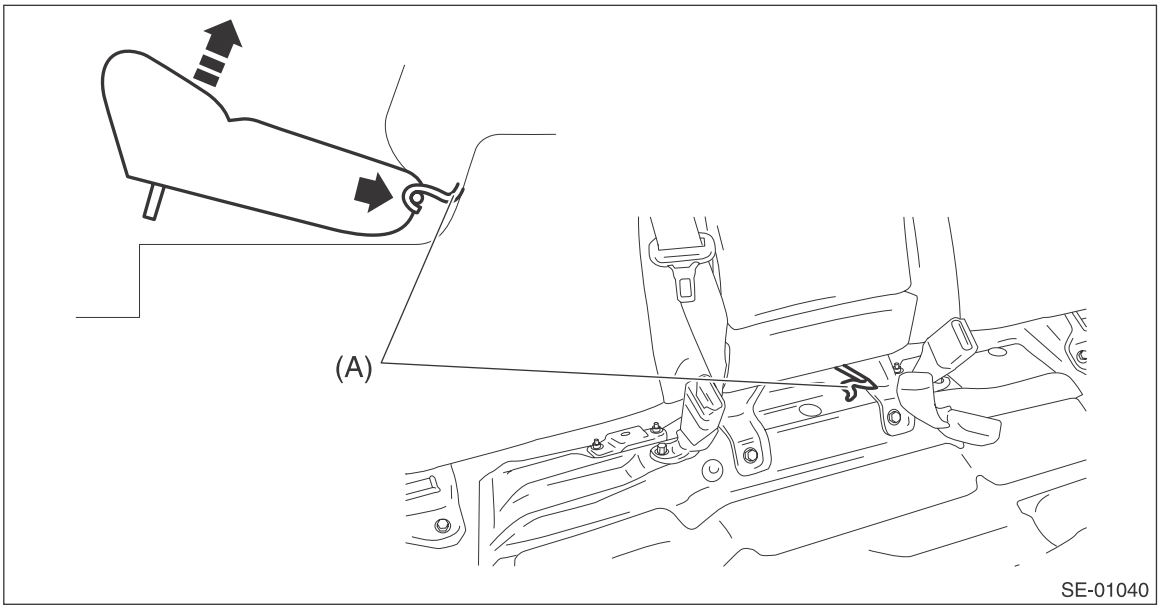

2) Release the clips and claws, and then remove the left and right side sill covers-rear INN.

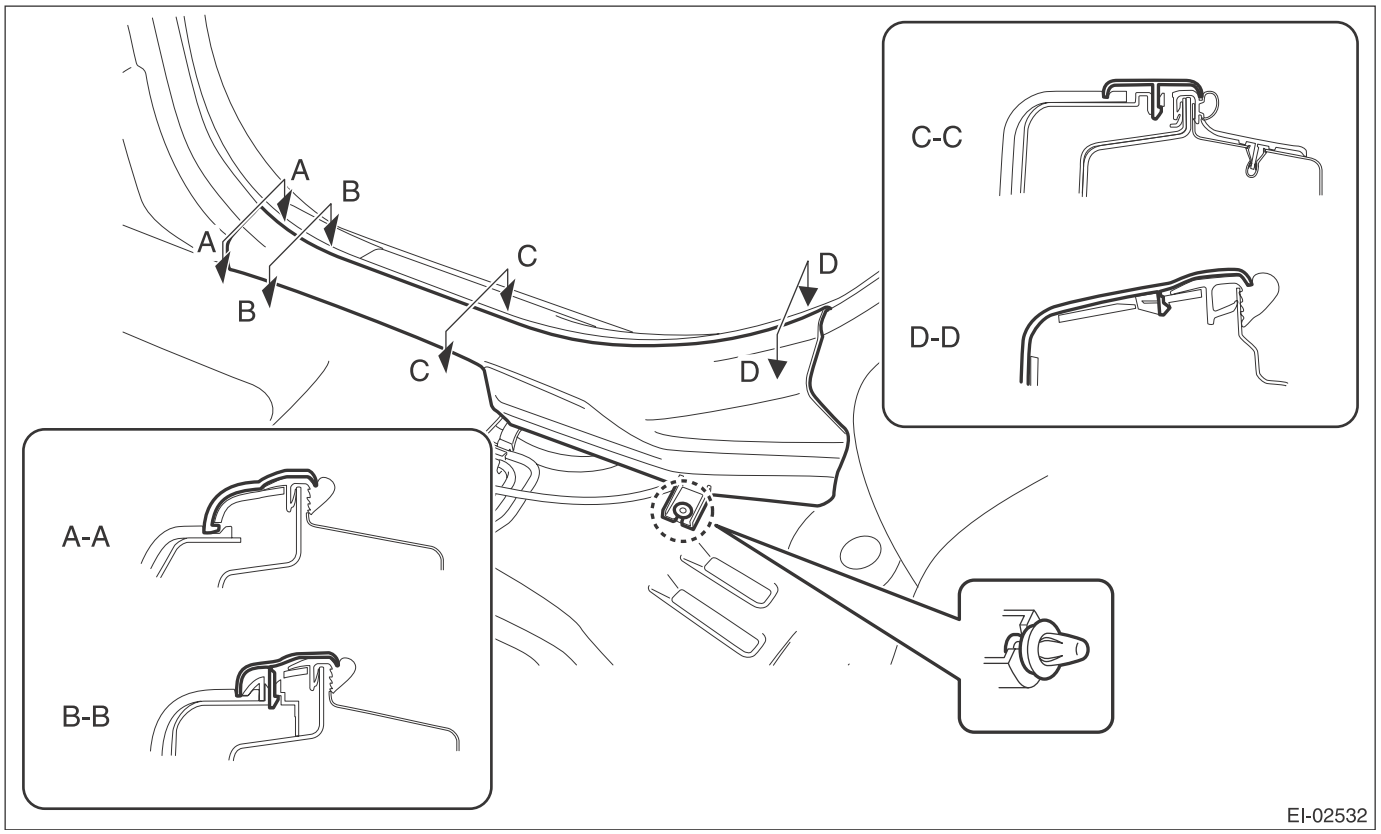

CAUTION:
Do not pull with excessive force. Doing so may damage the claws of the side sill cover INN.

NOTE:
To release the claws of the side sill cover INN, the following steps are recommended.
1. Take out the weather strip from under the side sill cover INN.
2. Turn over the floor mat and release the claws (C) and (D) by accessing from behind the side sill cover INN.

3) Release the claws, and then remove the left and right side sill cover-front INN.

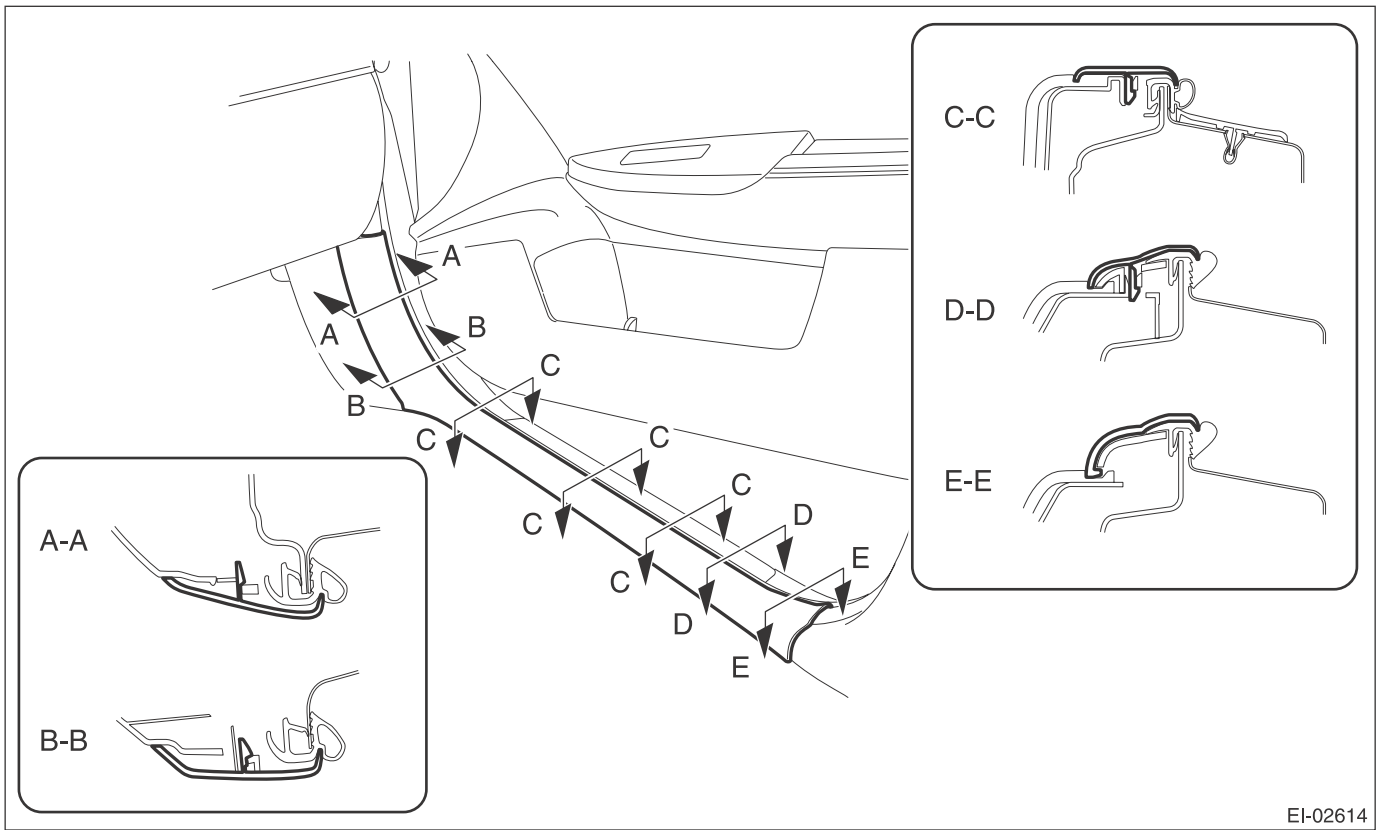

CAUTION:
Do not pull with excessive force. Doing so may damage the claws of the side sill cover INN.

NOTE:
To release the claws of the side sill cover INN, the following steps are recommended.
1. Take out the weather strip from under the side sill cover INN.
2. Turn over the floor mat and release the claw (C) by accessing from behind the side sill cover INN.

4) Remove the left and right center pillar trim LWR.
   (1) Release the clip by pulling the center pillar trim LWR toward you.
   (2) Expand the claws of center pillar trim LWR outward and remove it from the center pillar trim UPR.

CAUTION:
Do not expand the center pillar trim LWR excessively. Doing so may damage the trim.

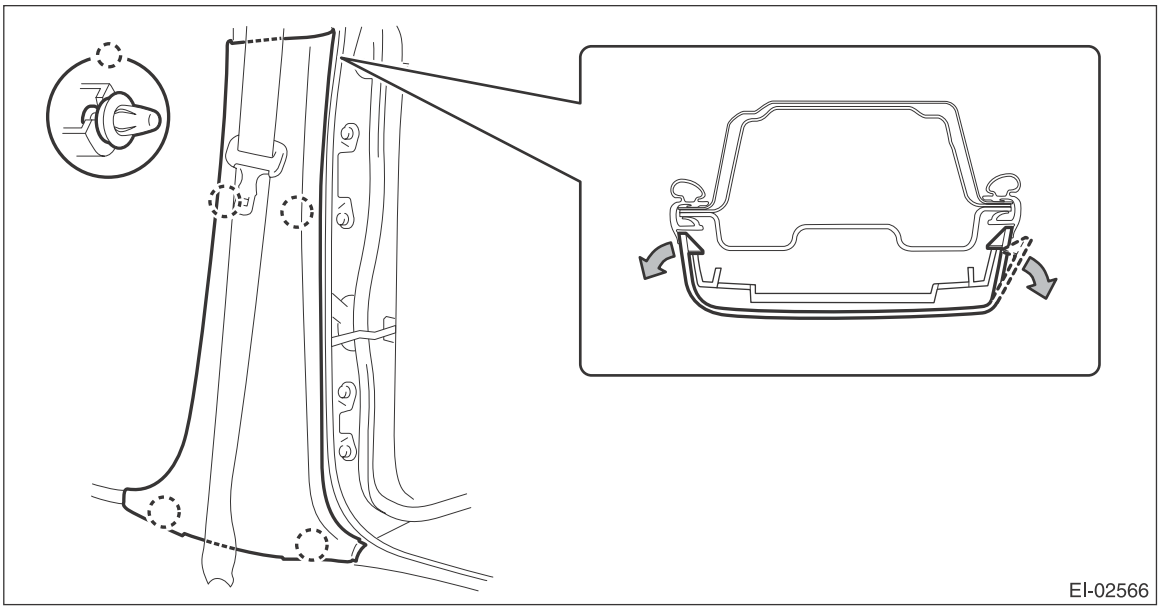

NOTE:
First release the claw located to the rear of the vehicle.
5) Disconnect the ground cable from battery and wait for at least 60 seconds before starting work.

CAUTION:
The airbag system is fitted with a backup power supply. After disconnecting the battery ground cable, the airbag may operate if you do not wait for 60 seconds before starting the service of airbag system.

NOTE:
For the power seat, adjust the front seat position before removing the battery ground.
6) Adjust the front seat position.
   (1) Remove the driver's seat and passenger's seat headrests.
   (2) Tilt the driver's seat backrest forward and move the seat to the front most position. (a)

(3) Tilt the passenger's seat backrest rearward and move the seat to the rearmost position. (b)

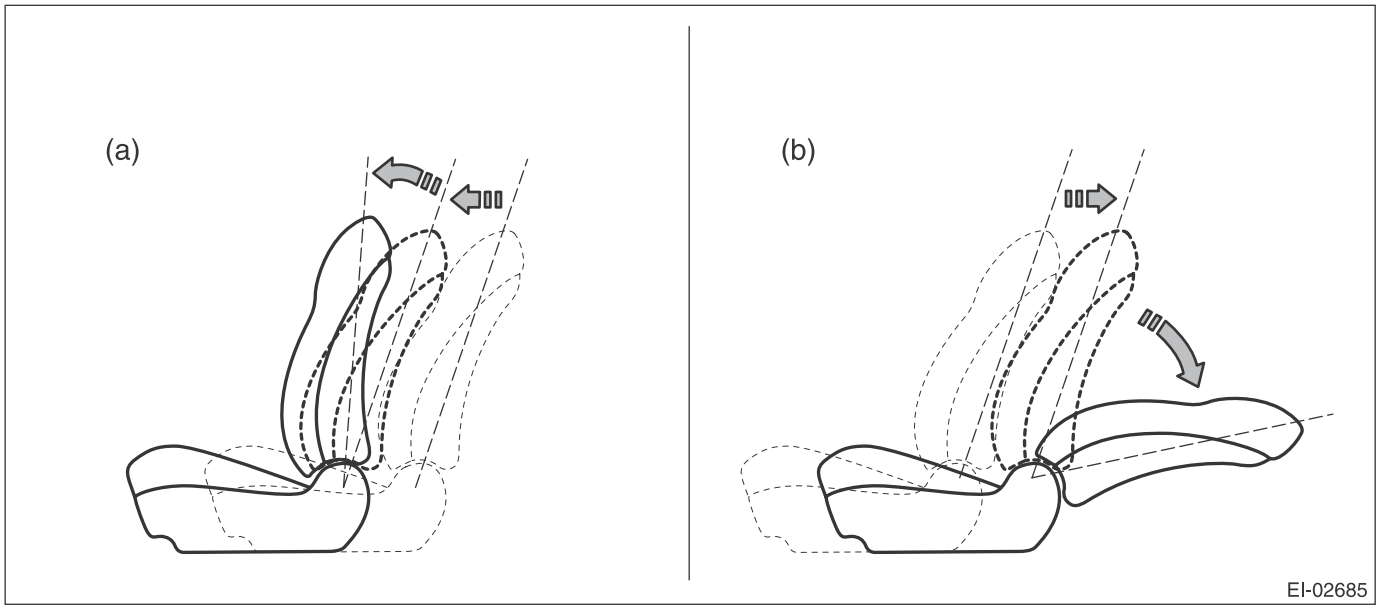

7) Cover the following areas to protect from damage.
- Steering wheel
- Instrument panel surface
- Glove box surface

8) Remove the console front cover assembly.
- MT model
  1. Remove the shift knob.
  2. Release the clips and claws, then pull up the console front cover assembly.

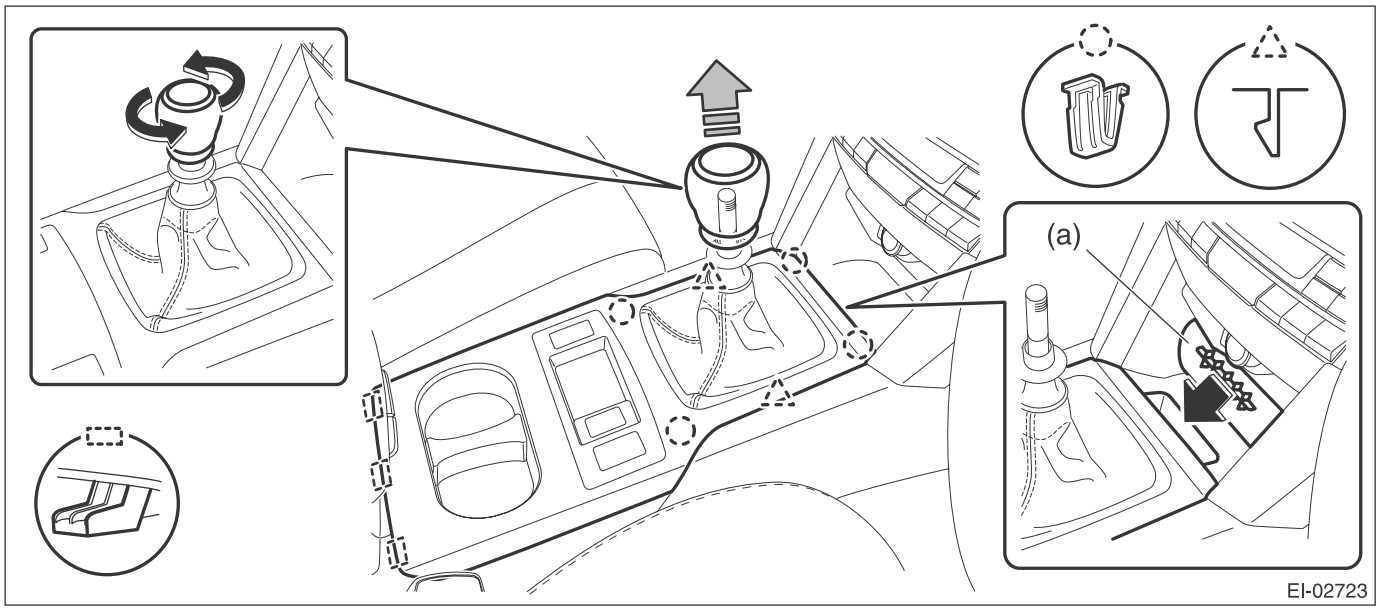

NOTE:
Turn over the front center pocket mat (a) and pull up the console front cover from the slit.

  3. Disconnect the harness connector and remove the console front cover assembly.

- AT model
  1. Remove the select lever knob.
     a. Lower the cover grip AT.
     b. Remove the clamp grip pin, then remove the select lever knob.
  2. Release the clips and claws, then pull up the console front cover assembly.

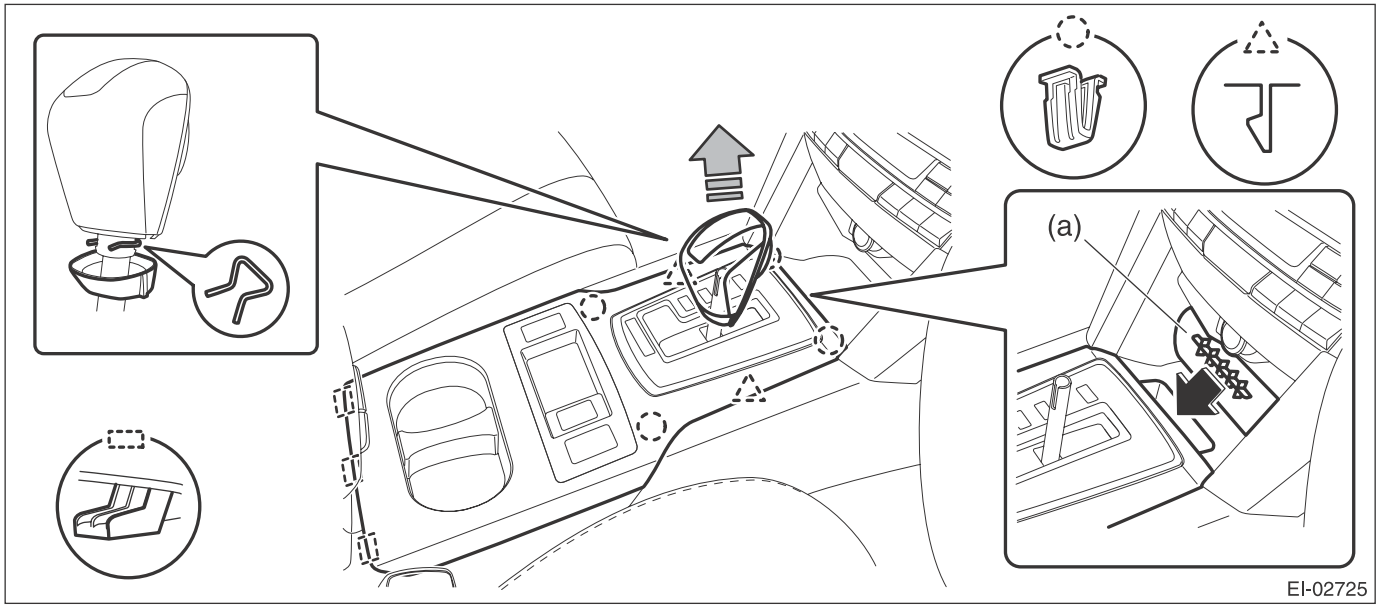

NOTE:
Turn over the front center pocket mat (a) and pull up the console front cover from the slit.

  3. Disconnect the harness connector and remove the console front cover assembly.

9) Remove the left and right console front side cover assembly.
   (1) Remove the screws and release the clips (A) to (D) in order.
   (2) Remove the console front side cover assembly by pulling it up.

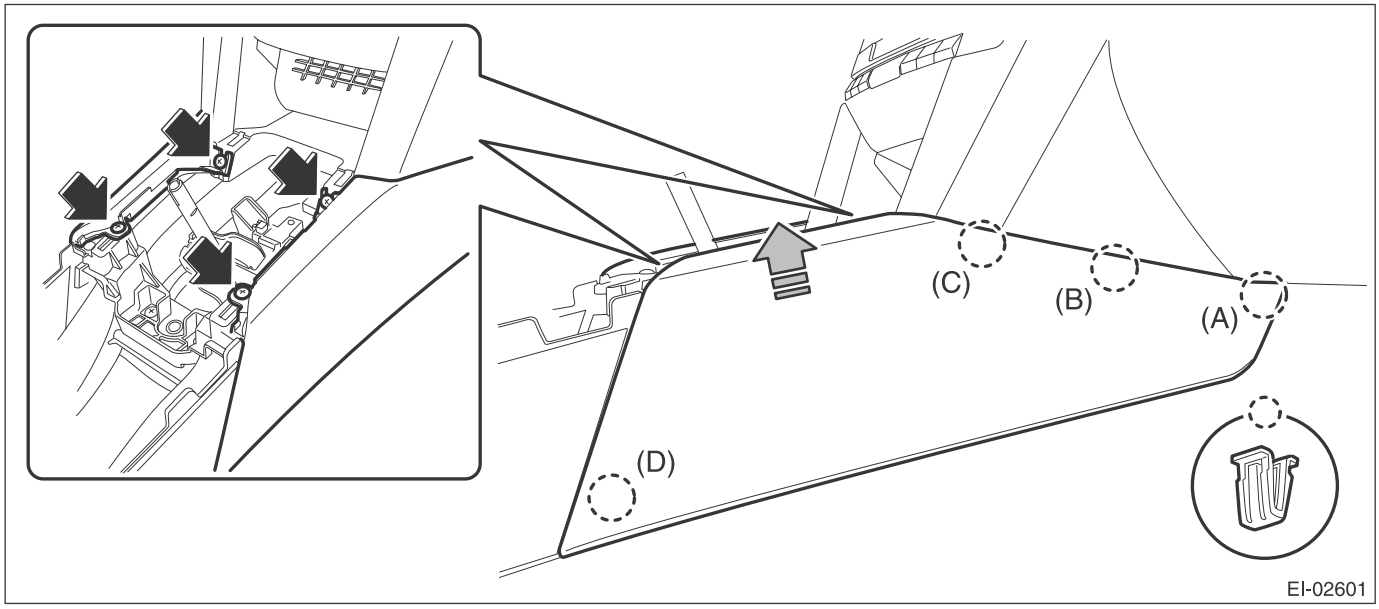

10) Remove the console box assembly.
(1) Move the seat, and remove the bolts after detaching the left and right caps.

NOTE:
For a model with power seat, connect the battery ground cable and move the seat. Then, disconnect the battery ground cable again and wait for 60 seconds at least before restarting the work.

(2) Remove the screws, disconnect the harness connector and remove the console box assembly.

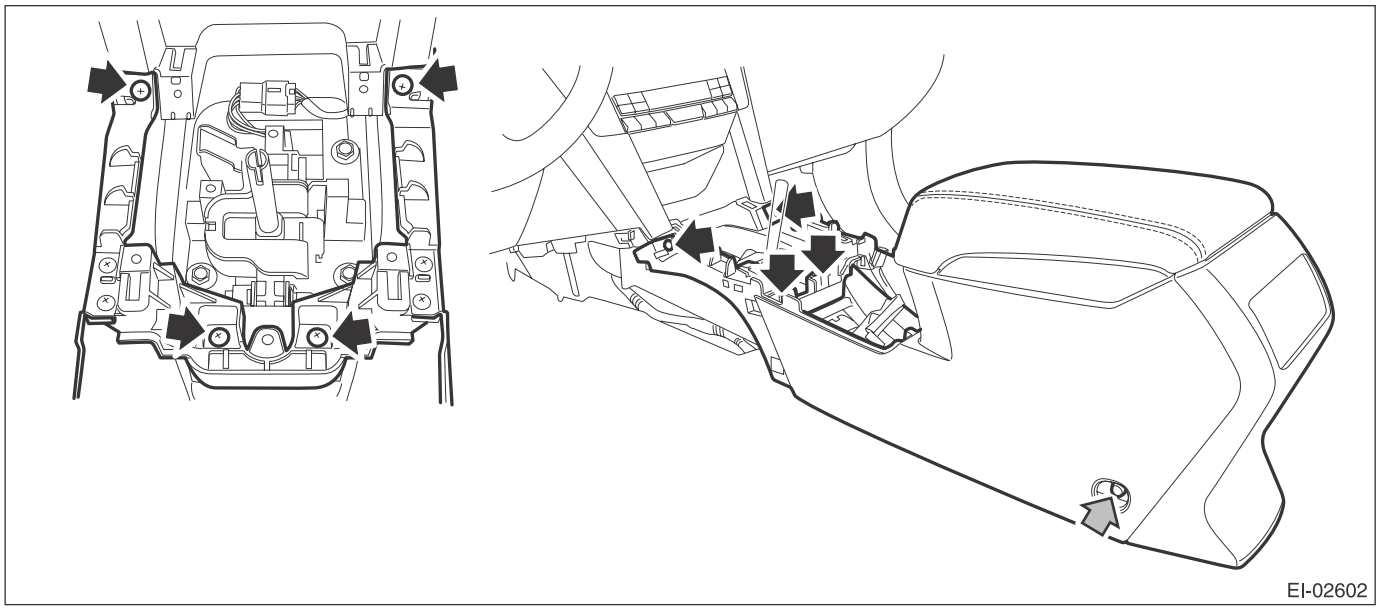

11) Remove the left and right rear quarter trim LWR.
(1) Remove the backrest side pad.
a) Remove the screws.

Preparation tool: Stubby screwdriver

b) Turn over the bottom end of the backrest side pad in the forward direction so that the claws are released.
c) Remove the backrest side pad by pulling it up.

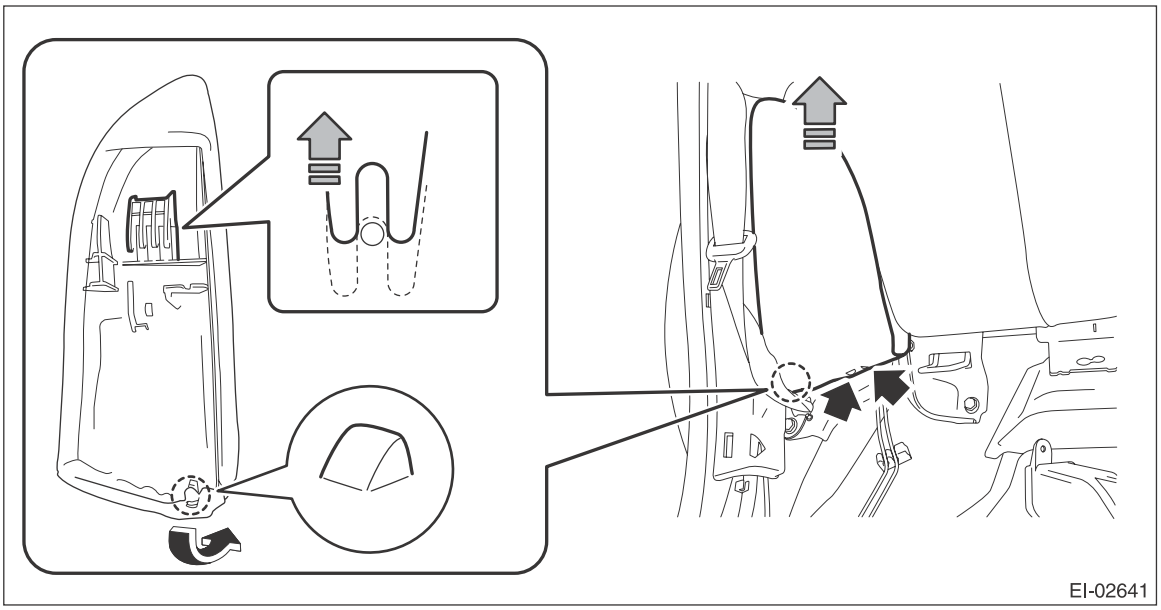

(2) Pull the release lever in the trunk room, and then tilt the backrest forward.

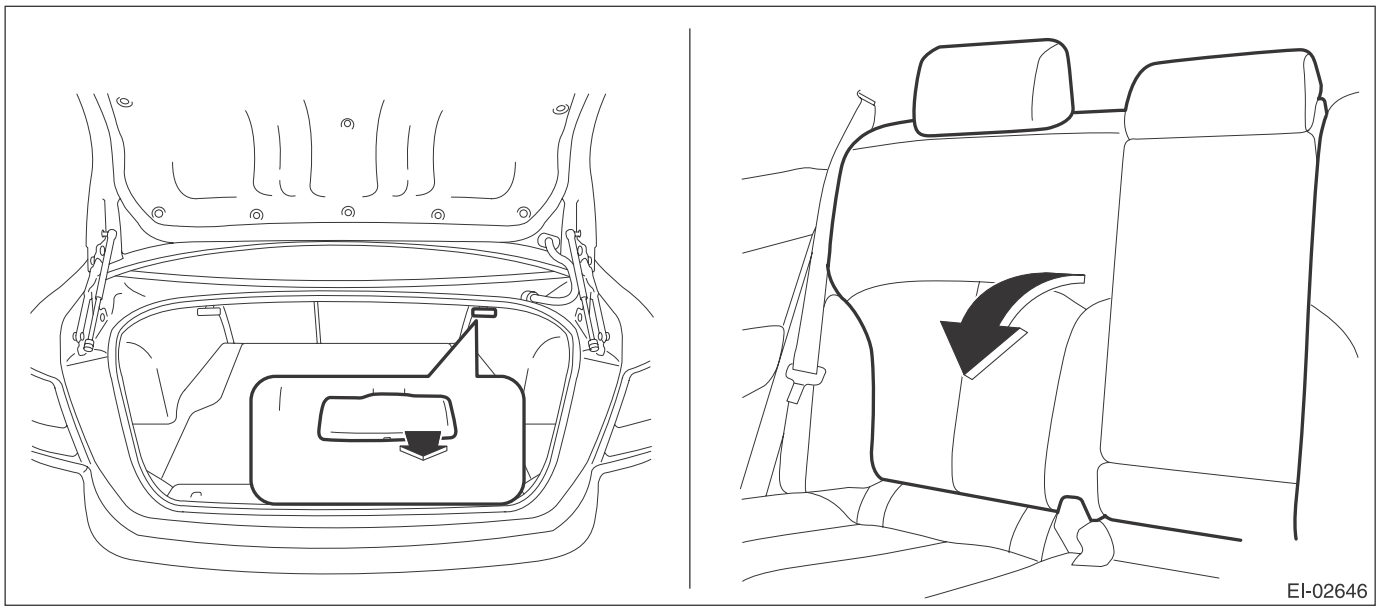

(3) Release the clips of the trunk trim panel assembly-side.
(4) Remove the clips, and remove the rear quarter trim LWR.

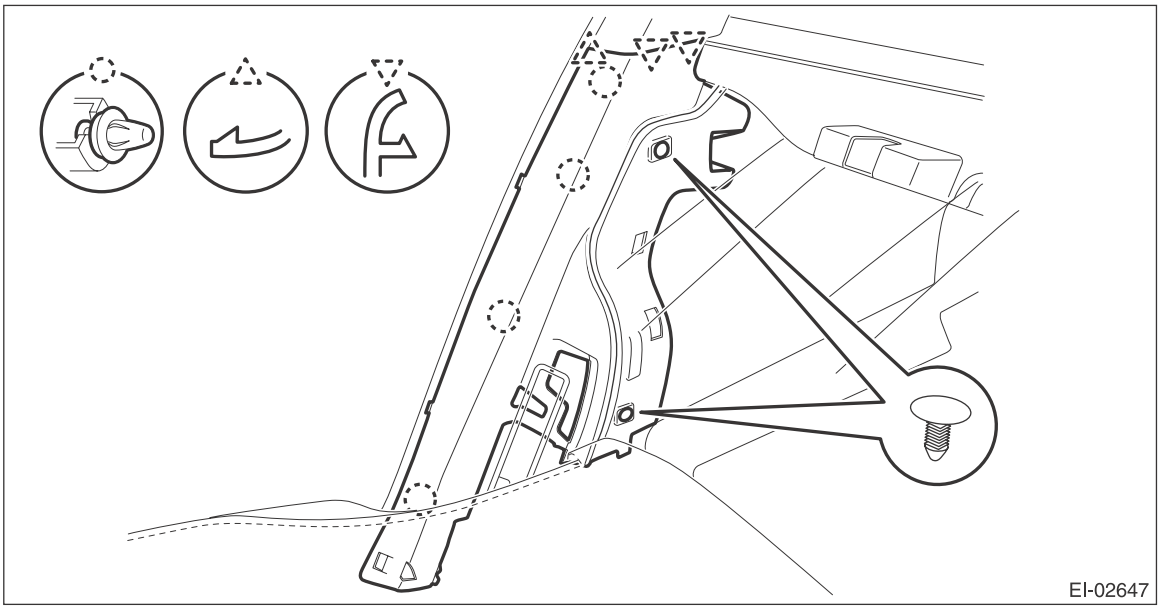

12) Remove the left and right rear quarter trim UPR.
(1) Remove the lower anchor bolt of the outer belt assembly.

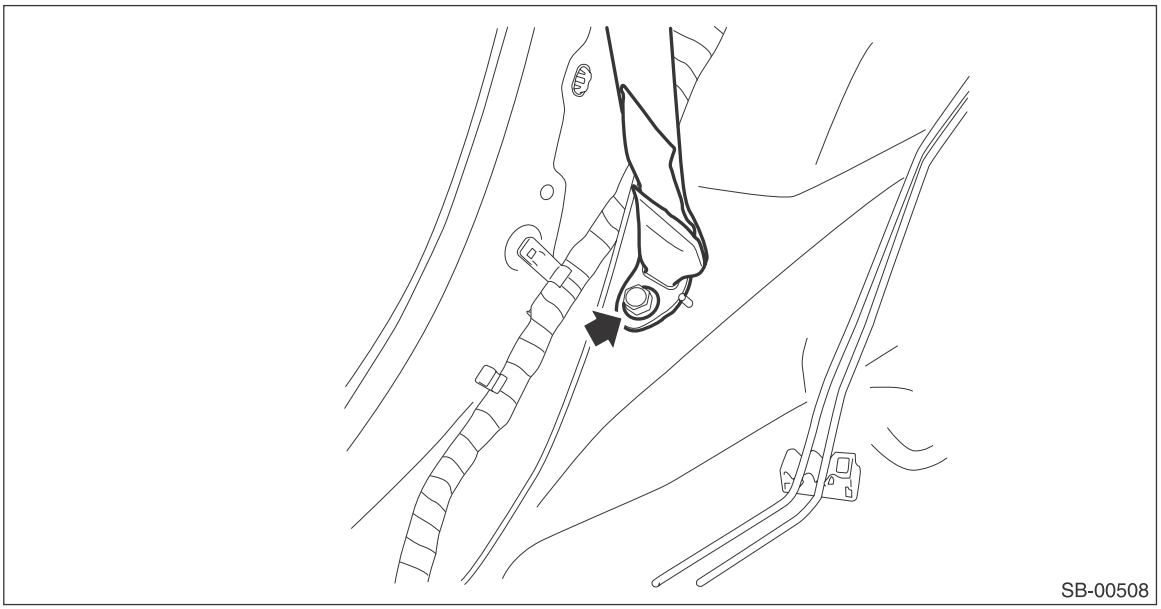

(2) Release the clips, and remove the rear quarter trim UPR.

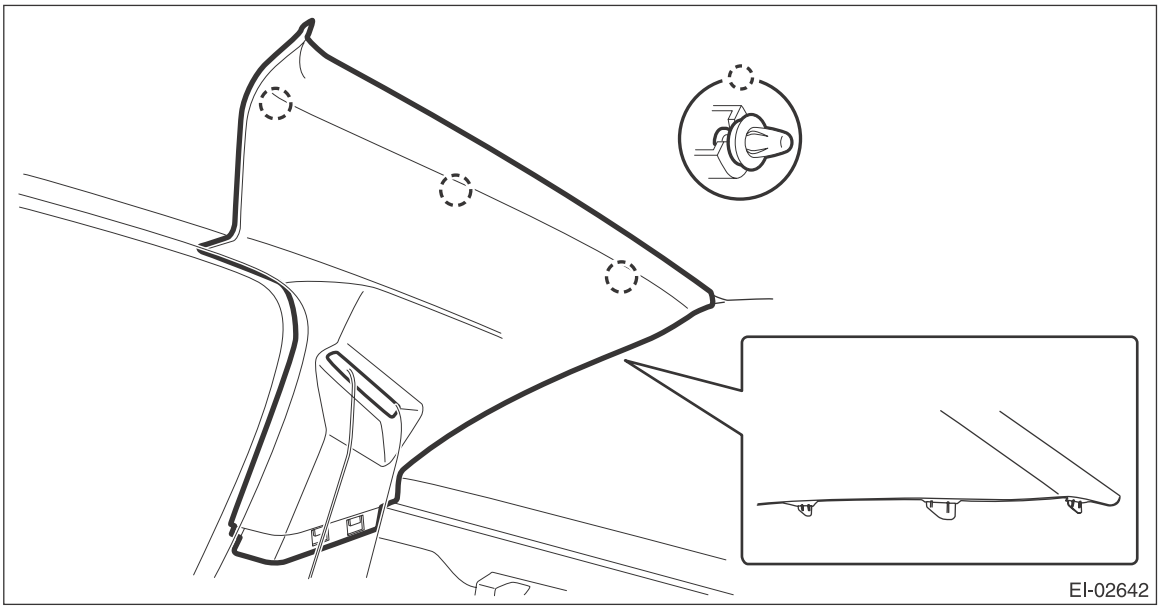

(3) Pull out the seat belt and remove the rear quarter trim UPR.

13) Remove the left and right front pillar trims.
(1) Pull the upper part of the front pillar trim towards the center of the vehicle.
(2) Insert long-nose pliers into the top part of the trim, grip the clip with the pliers and twist 90° in that position.

CAUTION:
Be careful not to damage the pillar trim surface and curtain airbag module when inserting the pliers.
(3) Holding the clip twisted as in the previous step, remove the front pillar trim from the clip.
(4) Remove the clip and the front pillar trim.

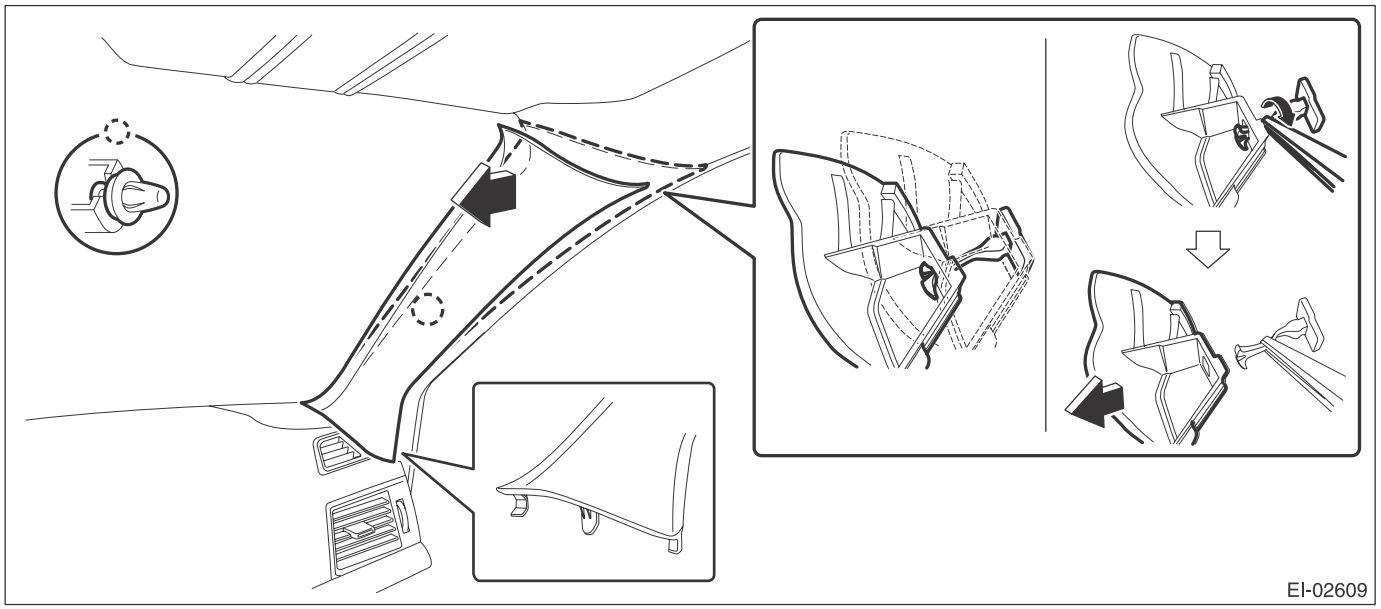
EI-02609

14) Remove the center pillar trim UPR.
(1) Remove the seat belt lower anchor bolt.

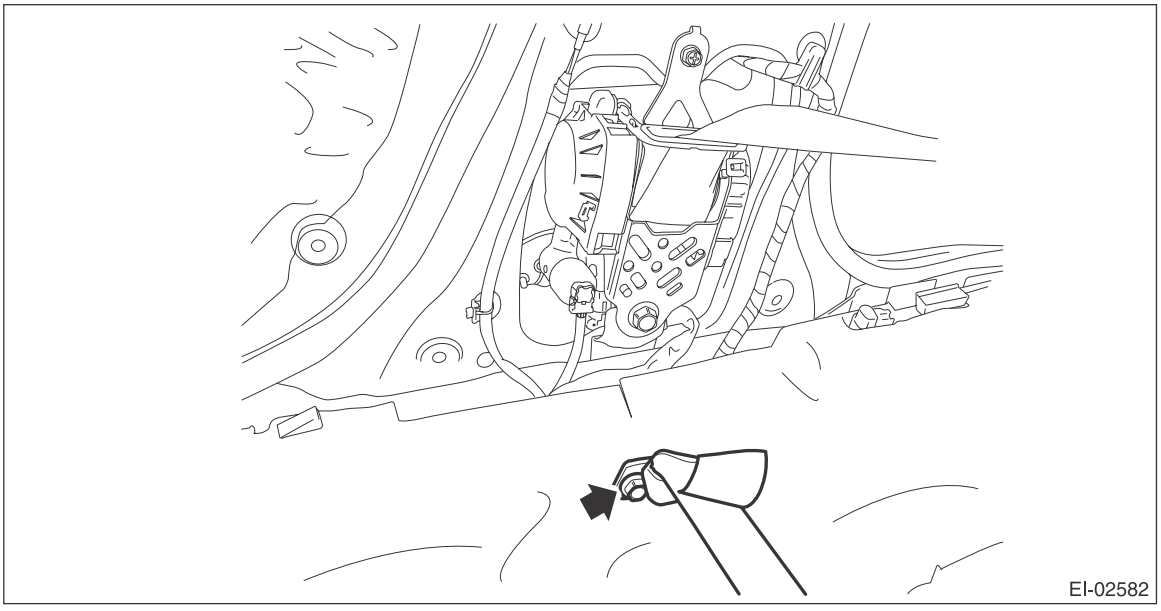
EI-02582

NOTE:
On passenger's side, disconnect the connector of the seat belt tension sensor.
(2) Release the clip by pulling the lower part of the trim toward you.

(3) Remove the clip by pulling the upper part of the trim toward you, and while lowering the entire trim, remove the center pillar trim UPR.

CAUTION:
Do not reuse the upper clips of the center pillar trim UPR. Once the clip is removed, its holding force is reduced. Be sure to replace it with a new clip.

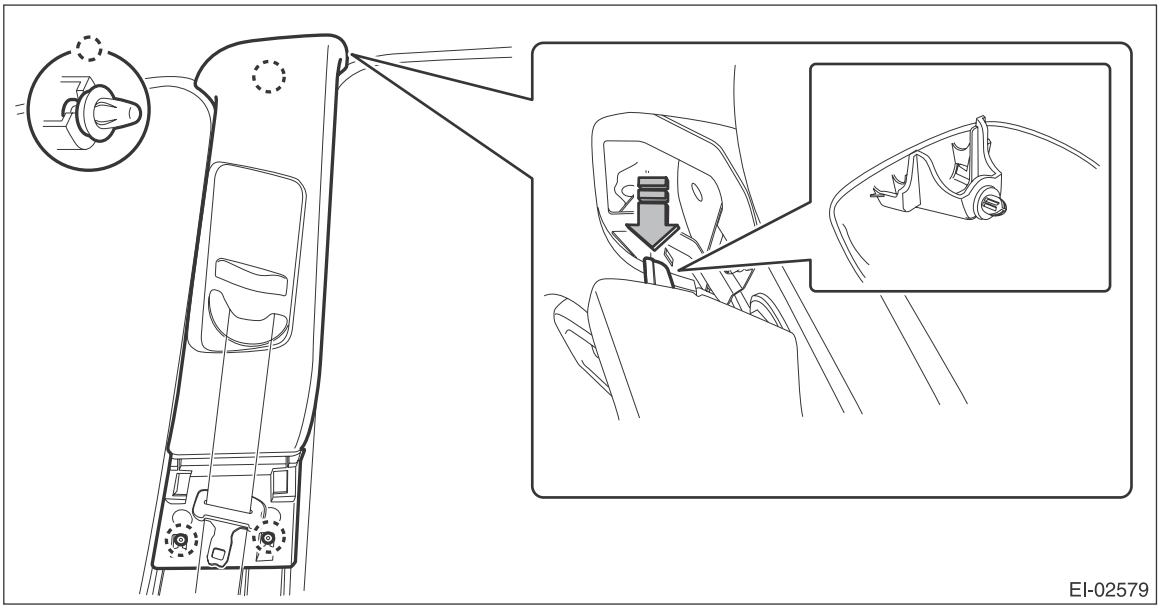

(4) Pull out the seat belt and remove the center pillar trim UPR.

15) Remove the rear door trim assembly on driver's side.
(1) Open the cover and remove the screw.
(2) Remove the clips in the order of (A) to (H) and remove the door trim from the door panel.

CAUTION:
When removing the door trim, be sure to remove the clips in the correct order. Forcibly removing clips may damage the door panel assembly.

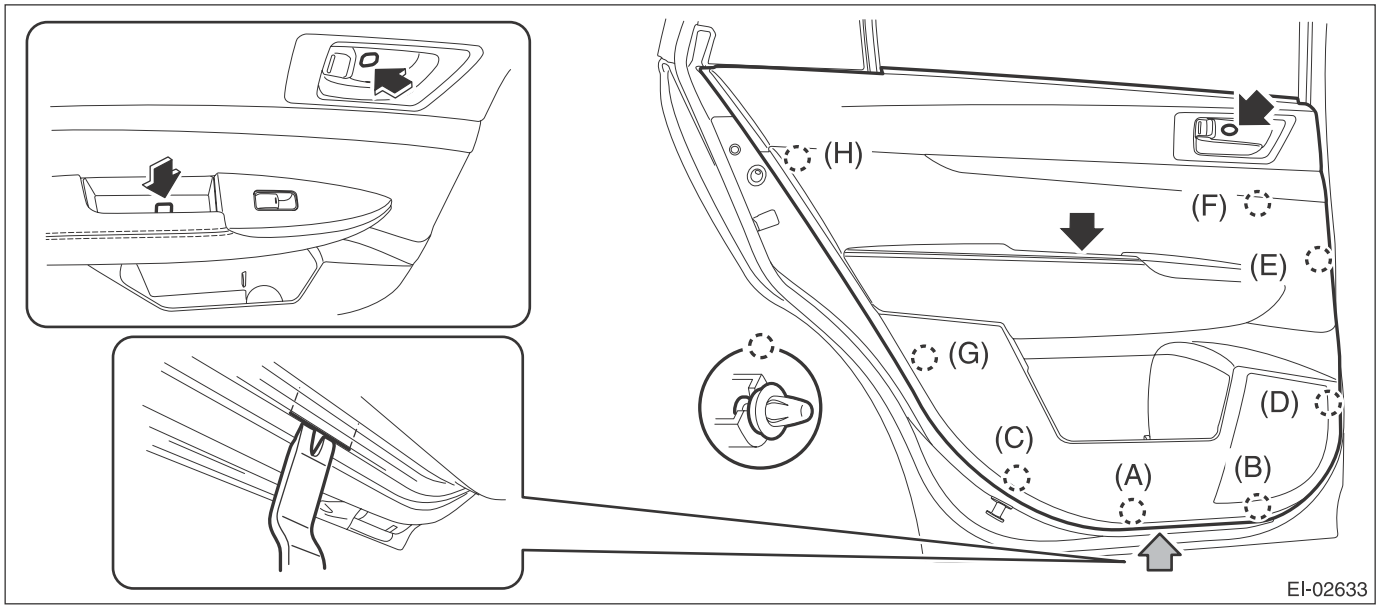

NOTE:
Insert a plastic clip remover into the slit at the bottom edge of the door trim and lift the door trim.

(3) Remove the cables (a) and (b) from the cable holder of inner remote.

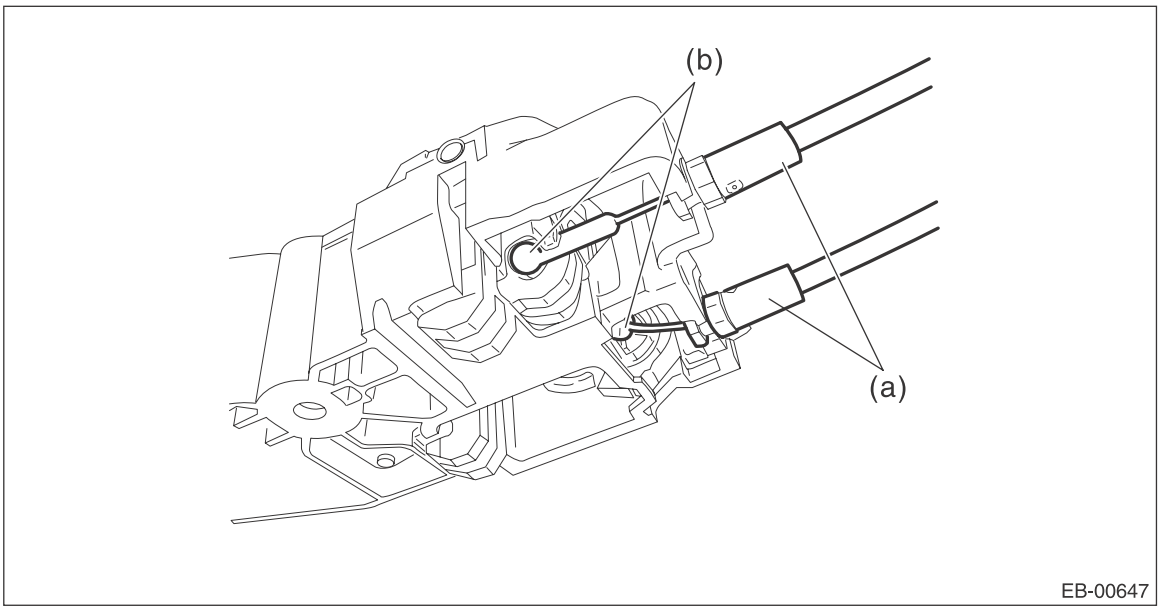

(4) Disconnect the harness connector and remove the door trim.

16) Remove the rear speaker assembly on driver's side.

(1) Remove the screws.

(2) Disconnect the harness connector and remove the rear door speaker.

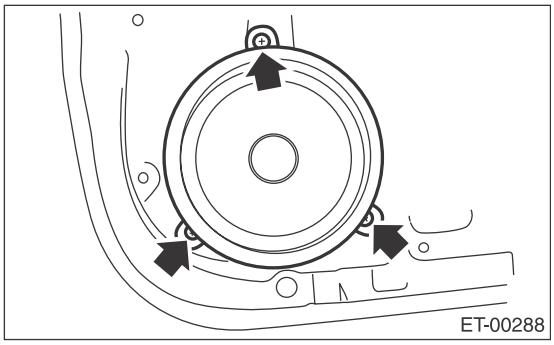

17) Remove the overhead console assembly.

(1) Push and open the rear end of the overhead console lid, and remove the screws.

(2) Disconnect the connector and remove the overhead console assembly.

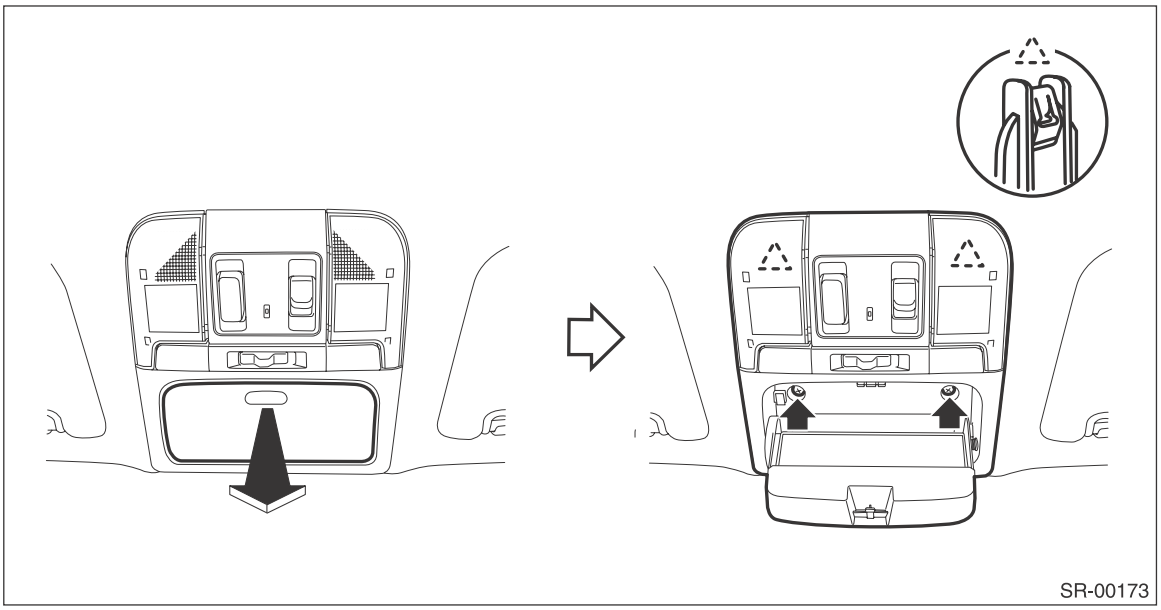

18) Remove the left and right sun visor assembly.
(1) Remove the cover, loosen the screws, and remove the sun visor assembly.
(2) Press the both sides of the sun visor hook using a flat tip screwdriver.
(3) Remove the sun visor hook by pulling toward you.

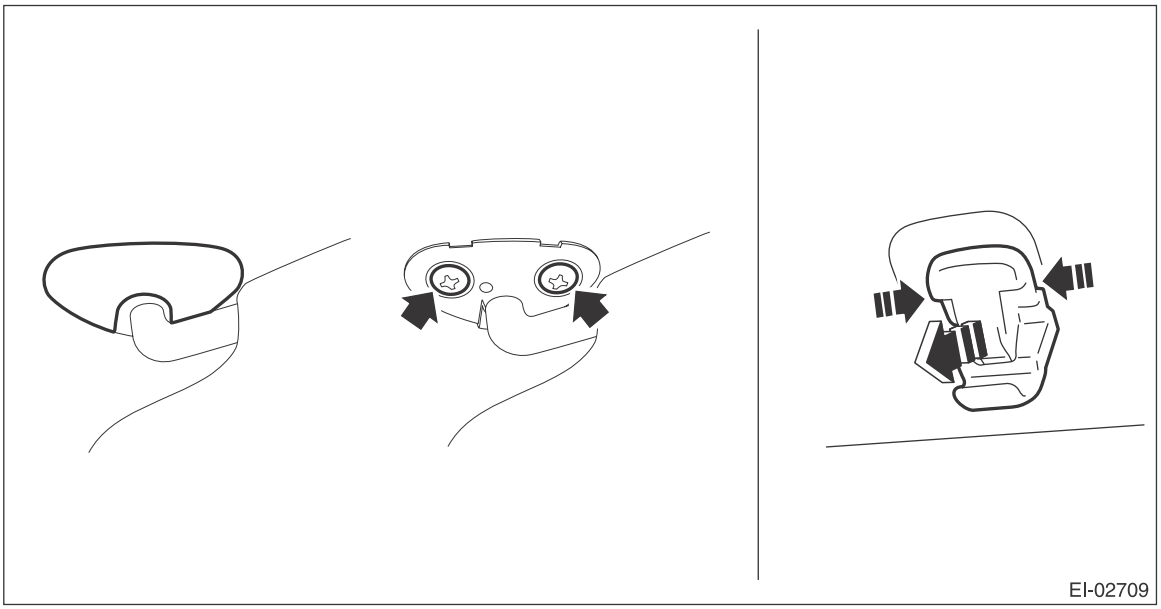

19) Remove the room light assembly.
(1) Release the claws and remove the cover.
(2) Remove the two screws.

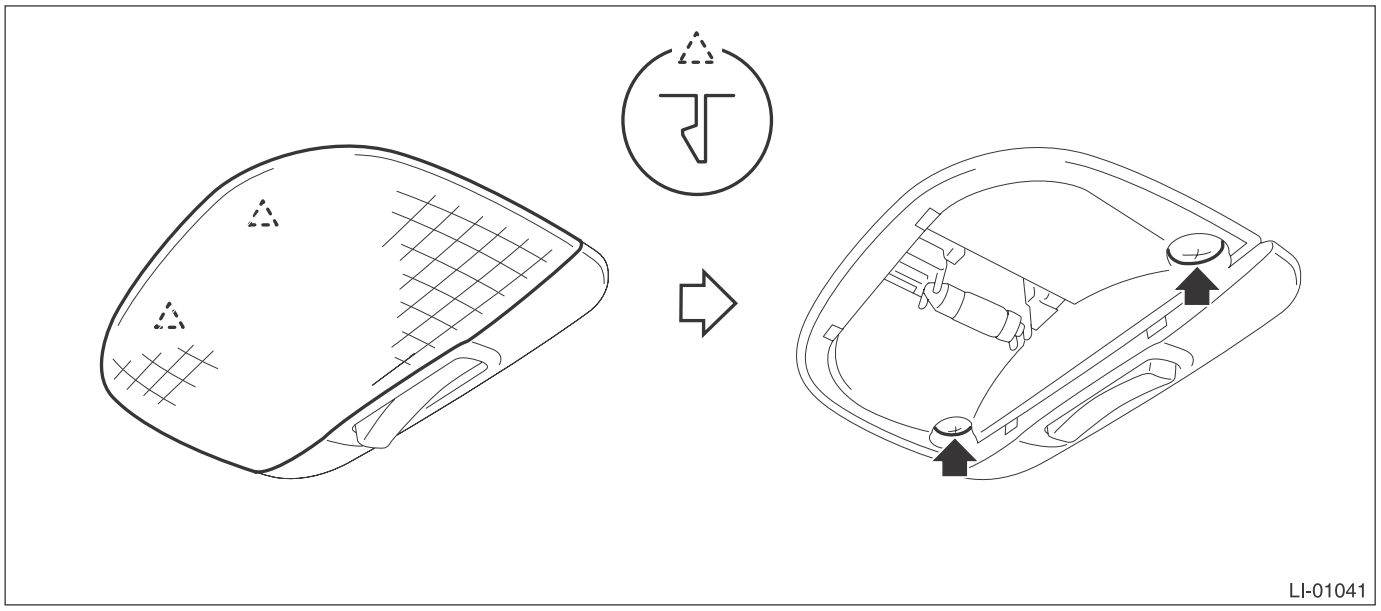

(3) Disconnect the connector and remove the room light assembly.

20) Remove all assist grip assembly.
(1) Remove the cap (a) by pulling the both sides of the cap (a) using a flat tip screwdriver wrapped with a protection tape.
(2) Pull the assist grip toward you (to the vehicle center) and remove the metal clip from the bracket.

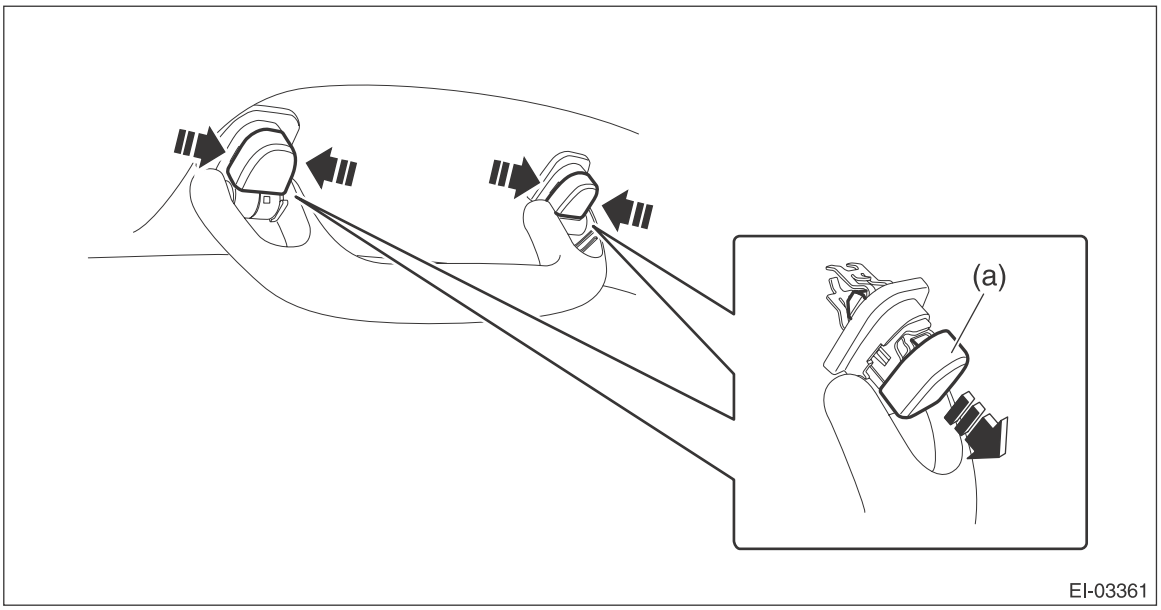

21) Remove the sun roof garnish. (Model with sunroof)

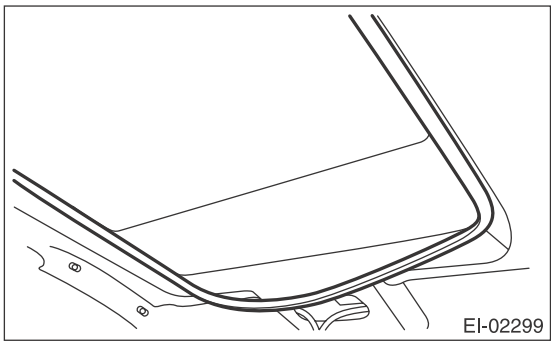

22) Disconnect the roof harness connector at the front pillar RH.
23) Remove the roof trim assembly.
(1) Remove the clips, and then remove the roof trim.

(2) Remove the feeder cord and roof cord from the roof trim.

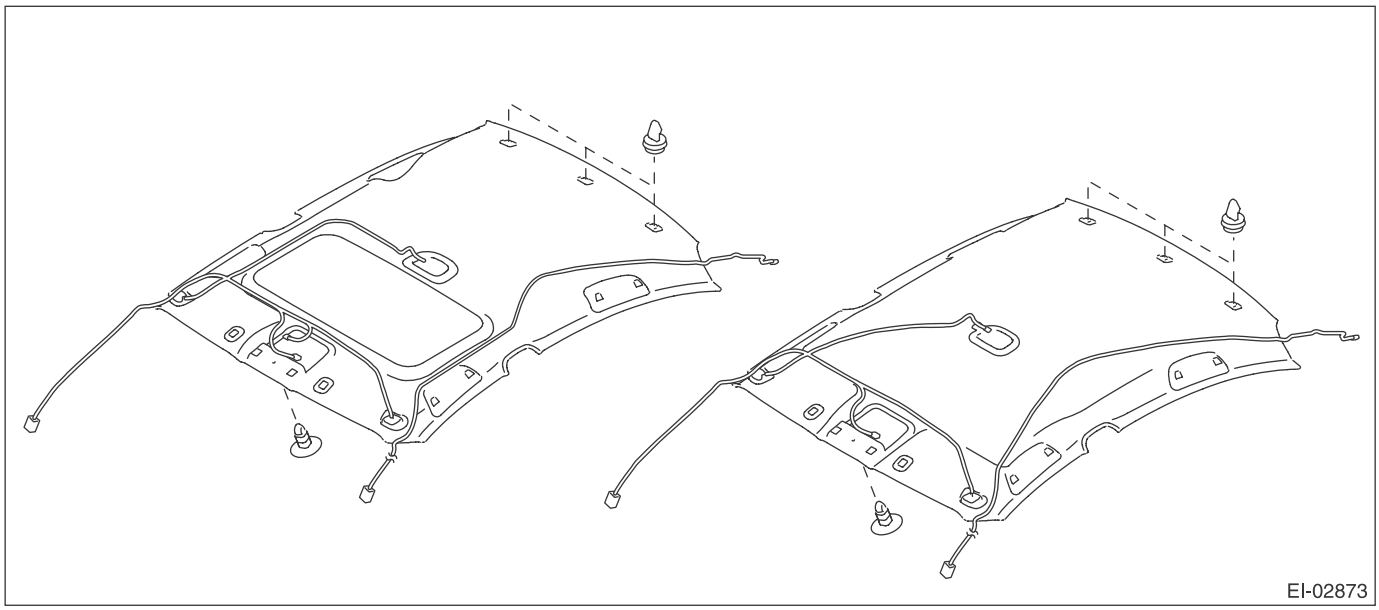

(3) Take out the roof trim assembly from inside the vehicle.
a) Align the center pillar (A) of roof trim with a corner (B) of the driver's seat and turn the roof trim obliquely.

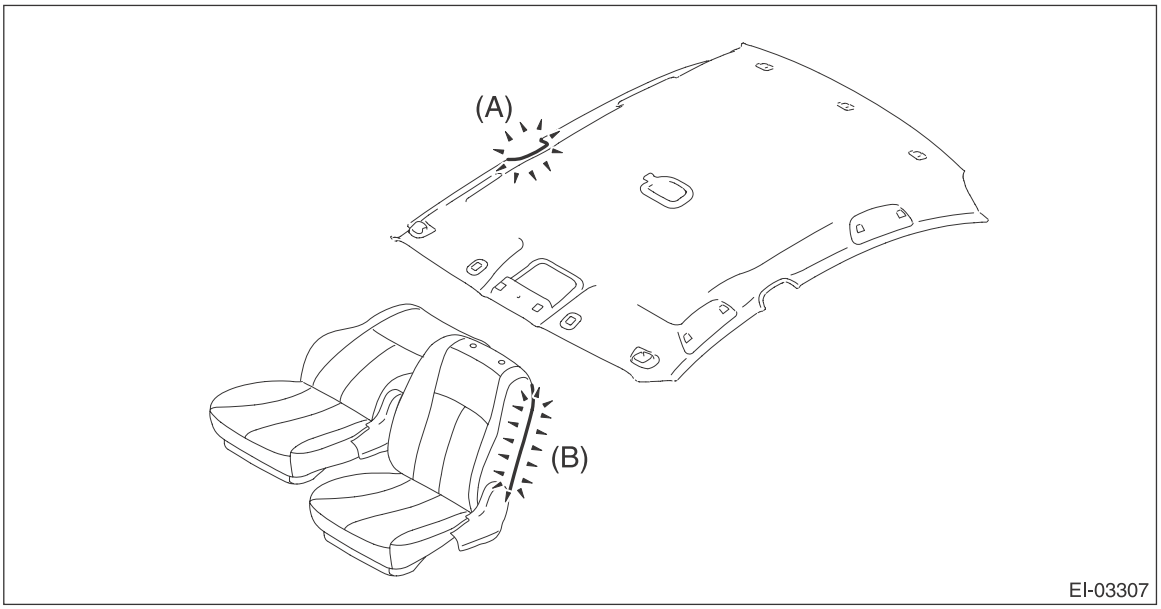

b) While holding the roof trim assembly in the condition in step a), take it out from the driver's side rear door opening.

2. OUTBACK MODEL

1) Disconnect the ground cable from battery and wait for at least 60 seconds before starting work.

CAUTION:
The airbag system is fitted with a backup power supply. After disconnecting the battery ground cable, the airbag may operate if you do not wait for 60 seconds before starting the service of airbag system.

2) Remove the rear seat cushion assembly.
   (1) Pull up the seat cushion and release the hook.

CAUTION:
If the hook is removed from vehicle body, replace the hook with the new part to avoid the deterioration of seat securing.

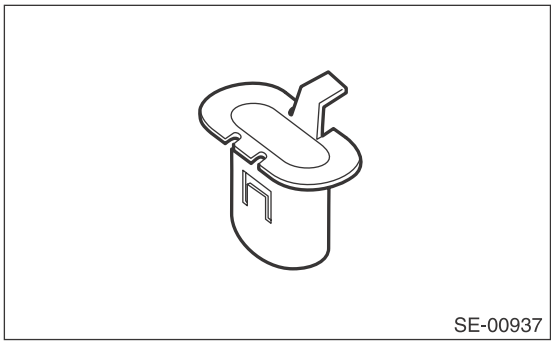
SE-00937

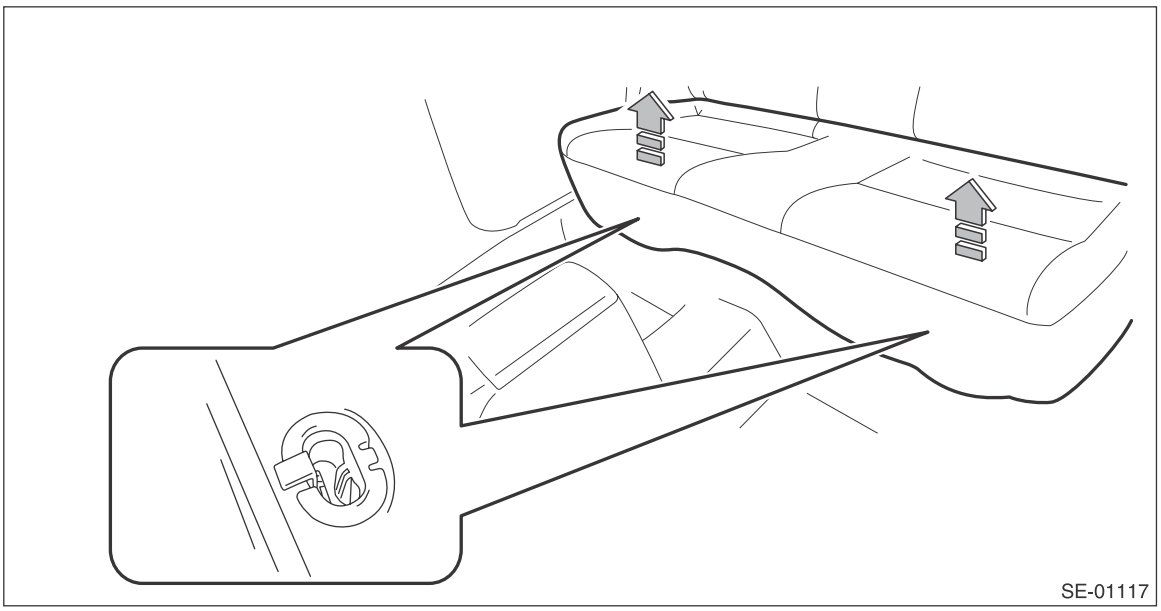
SE-01117

(2) Remove the hook (A) by pushing it back while lifting the front side of the seat cushion, and remove the seat cushion.

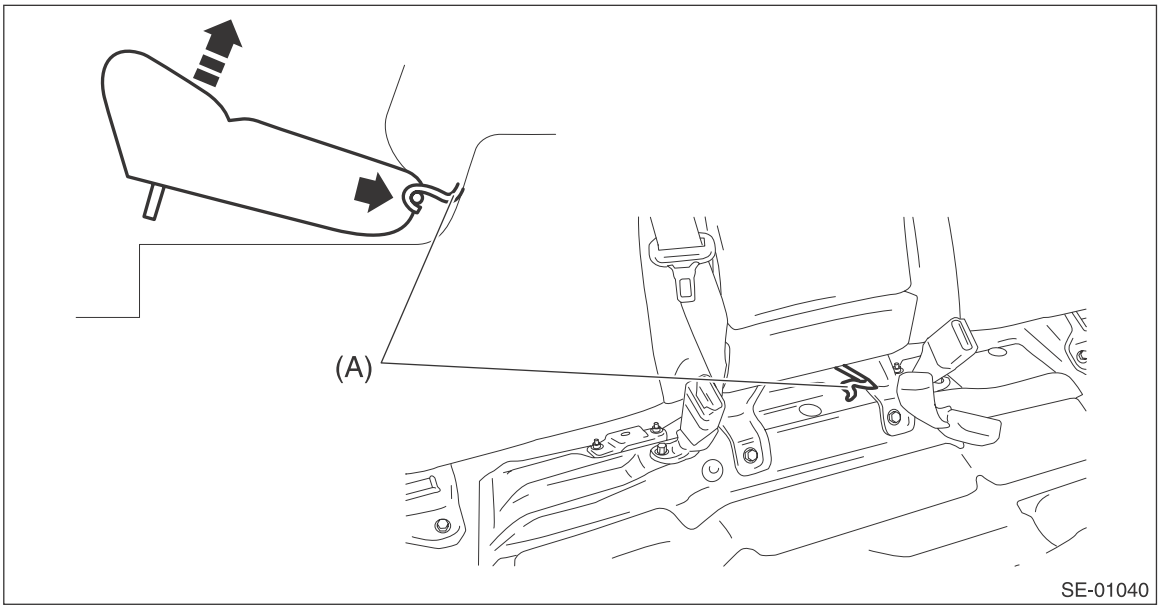

3) Release the clips and claws, and then remove the left and right side sill covers-rear INN.

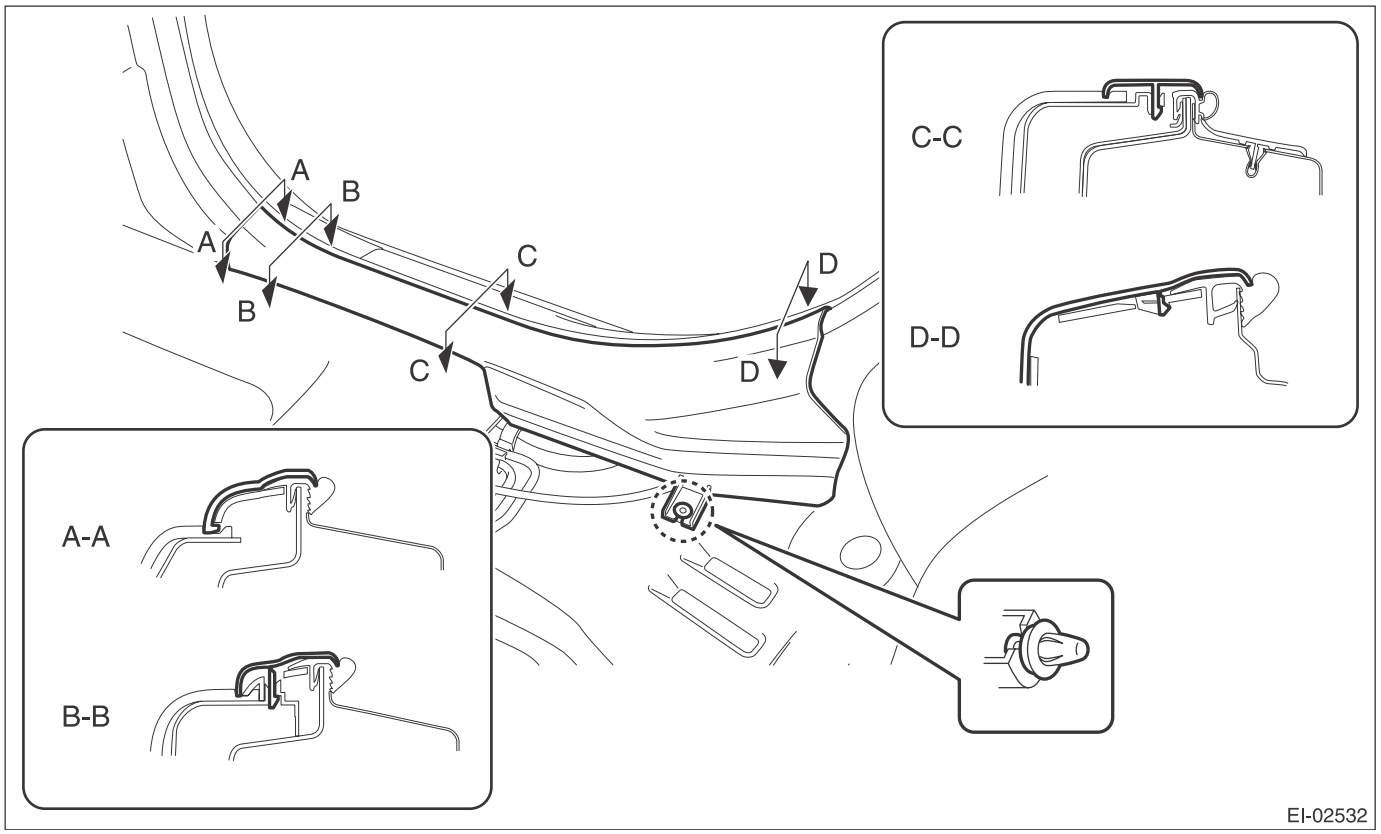

CAUTION:
Do not pull with excessive force. Doing so may damage the claws of the side sill cover INN.

NOTE:
To release the claws of the side sill cover INN, the following steps are recommended.
1. Take out the weather strip from under the side sill cover INN.
2. Turn over the floor mat and release the claws (C) and (D) by accessing from behind the side sill cover INN.

4) Tilt the backrest forward and release the clips of the backrest backside mat.

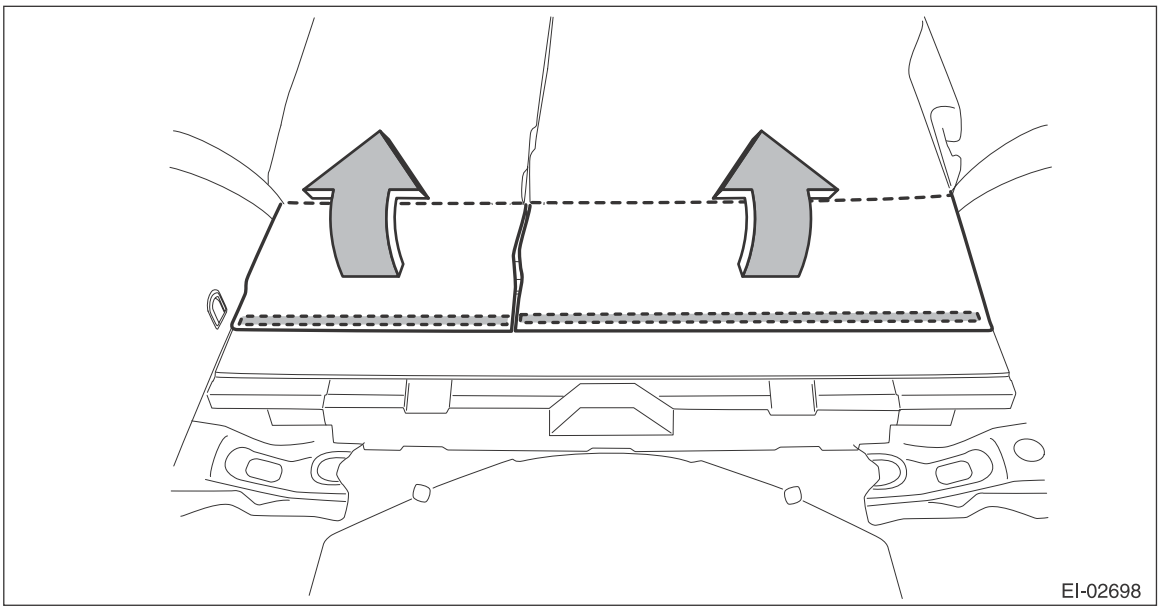

5) Remove the left and right backrest side pad assembly. (On the side where airbag sensor is removed)
(1) Disconnect the backrest cable and reclining lever cable.
(2) Remove the screws and remove the reclining lever assembly by pulling it downward.

Preparation tool: Stubby screwdriver

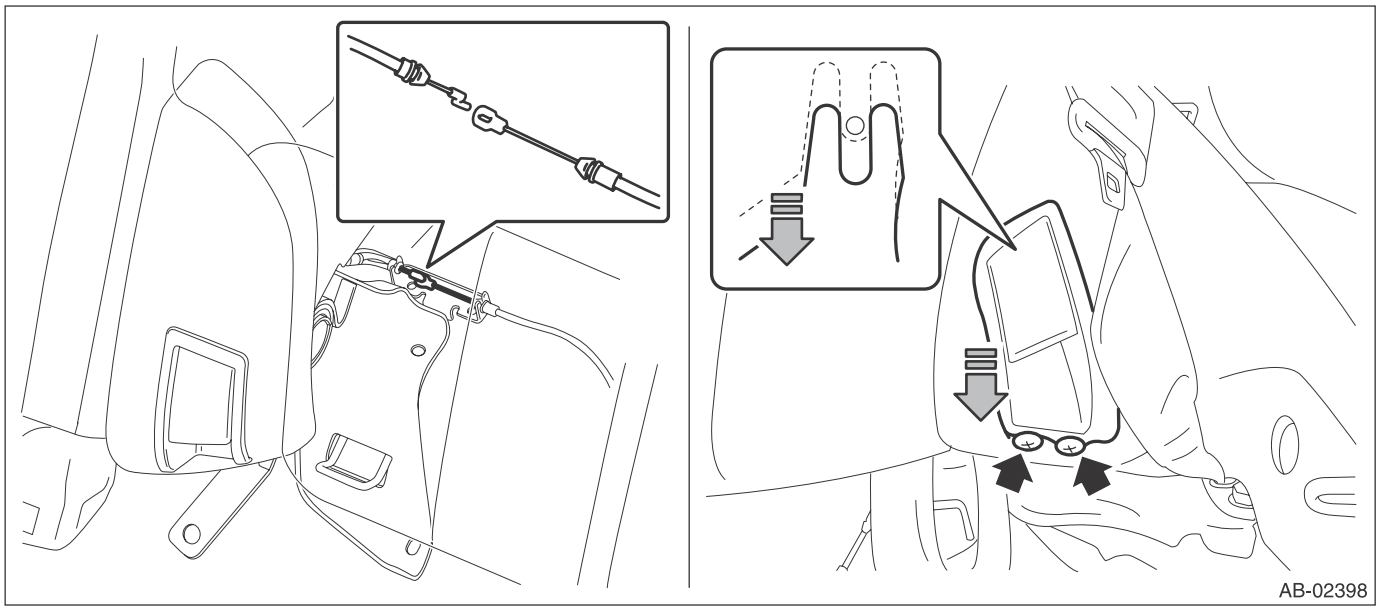

(3) Turn over the bottom end of the backrest side pad in the forward direction so that the claws are released.

(4) Remove the backrest side pad by pulling it up.

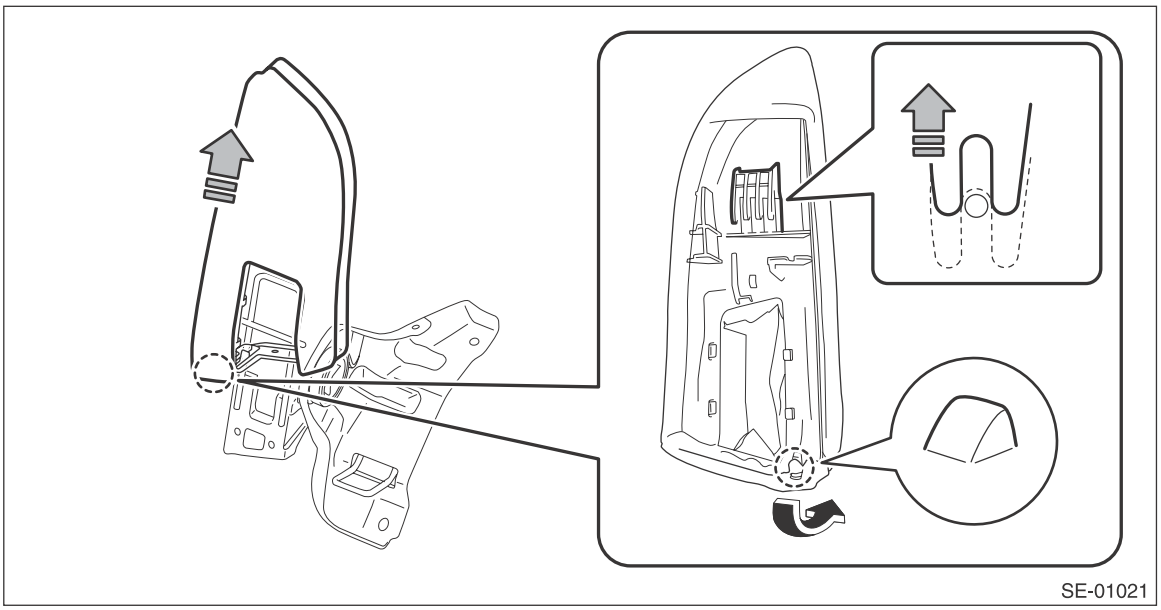

6) Remove the clips, and remove the luggage floor box and rear floor edge cover.

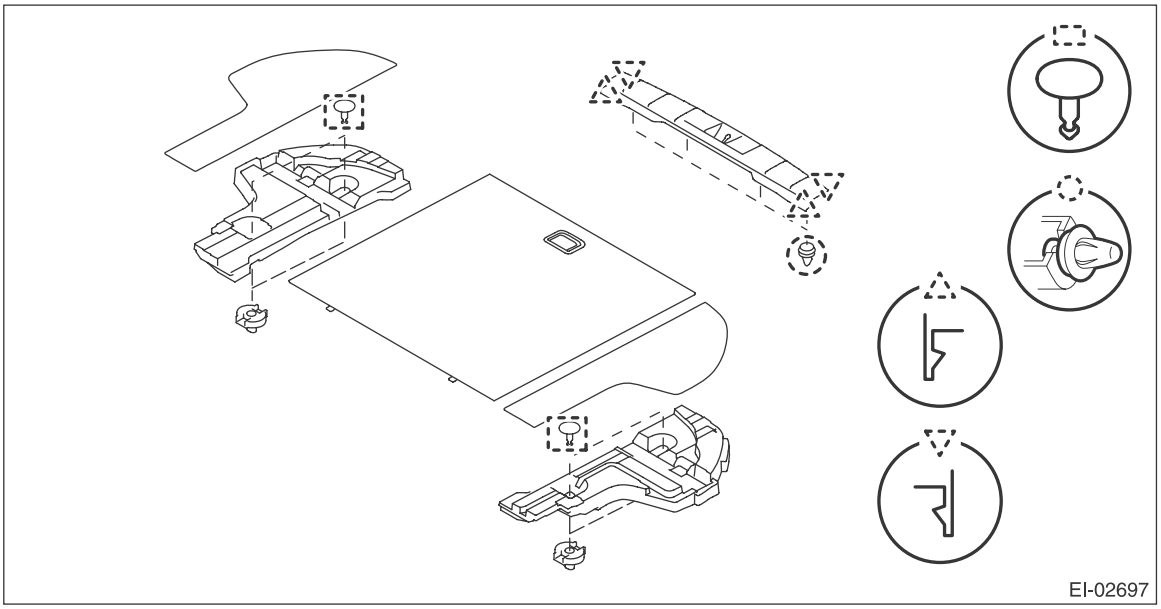

7) Remove the left and right rear quarter trim LWR.
(1) Remove the caps, screws, and bolts. (A), (C)
(2) Take out the hook and remove the screw inside. (B)

(3) Remove the clips, and remove the rear quarter trim LWR.

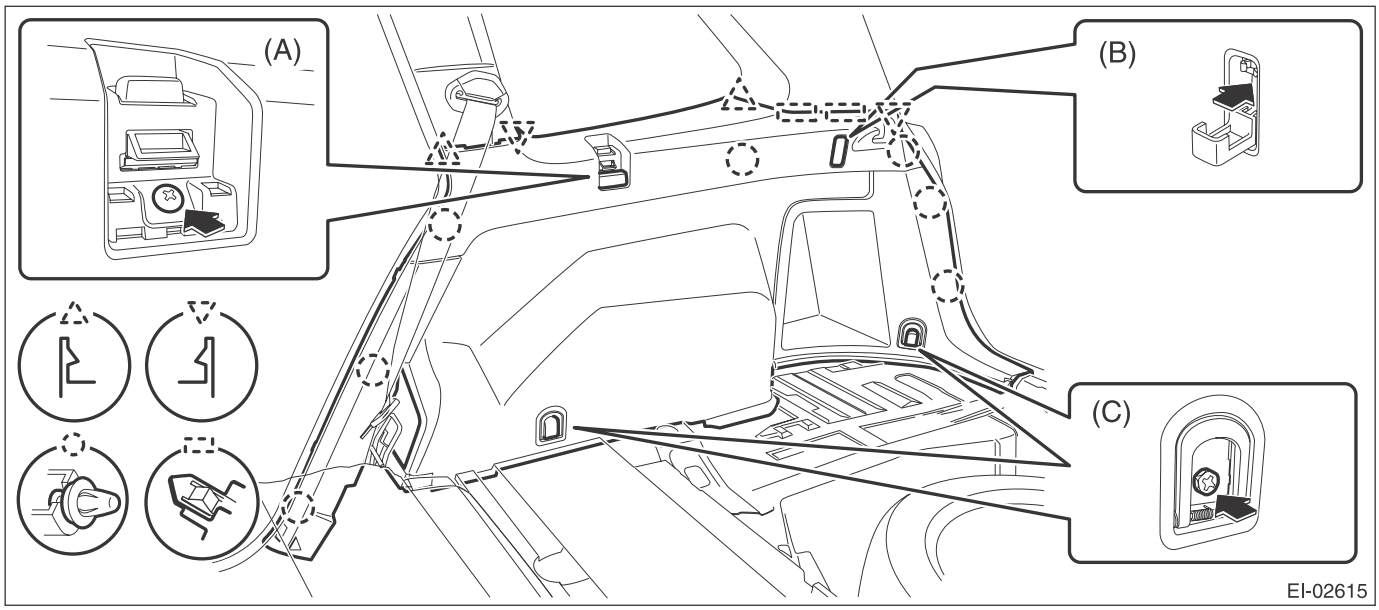

8) Remove the left and right rear quarter trim UPR.
(1) Open the cap and remove the bolt to remove the seat belt anchor.
(2) Remove the clips, and remove the rear quarter trim UPR-front.
(3) Remove the clips, and remove the rear quarter trim UPR-rear.

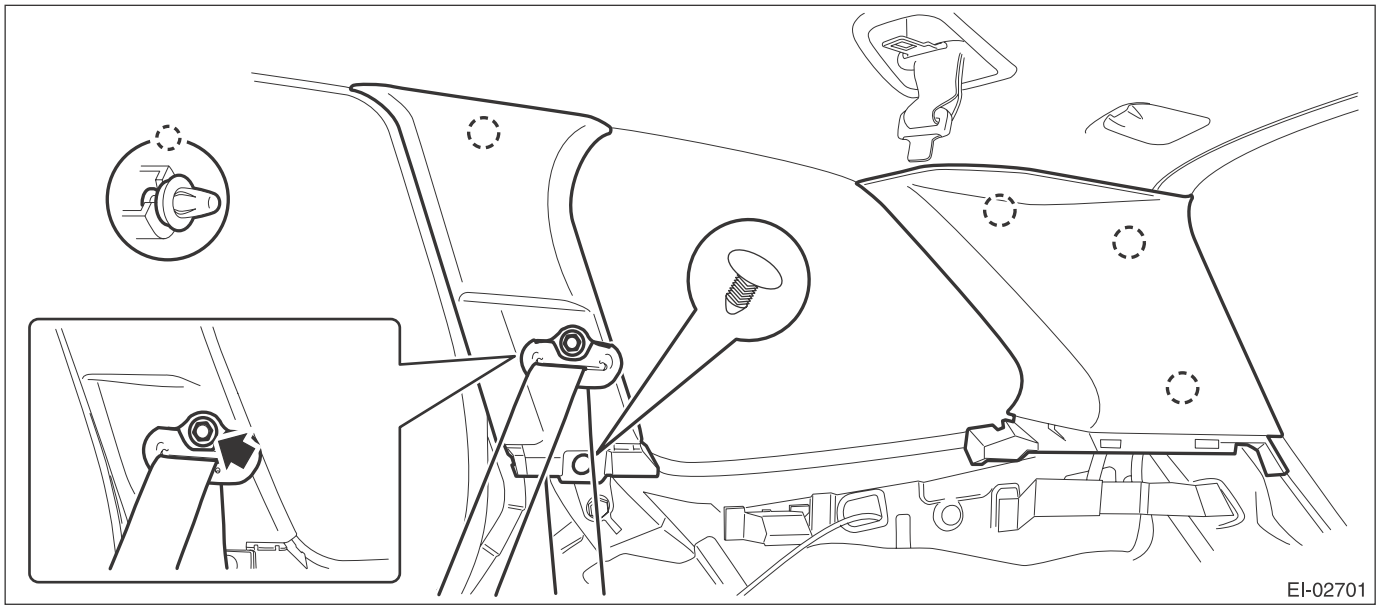

9) Remove the left and right front pillar trims.
(1) Pull the upper part of the front pillar trim towards the center of the vehicle.
(2) Insert long-nose pliers into the top part of the trim, grip the clip with the pliers and twist 90° in that position.

CAUTION:
Be careful not to damage the pillar trim surface and curtain airbag module when inserting the pliers.
(3) Holding the clip twisted as in the previous step, remove the front pillar trim from the clip.

(4) Remove the clip and the front pillar trim.

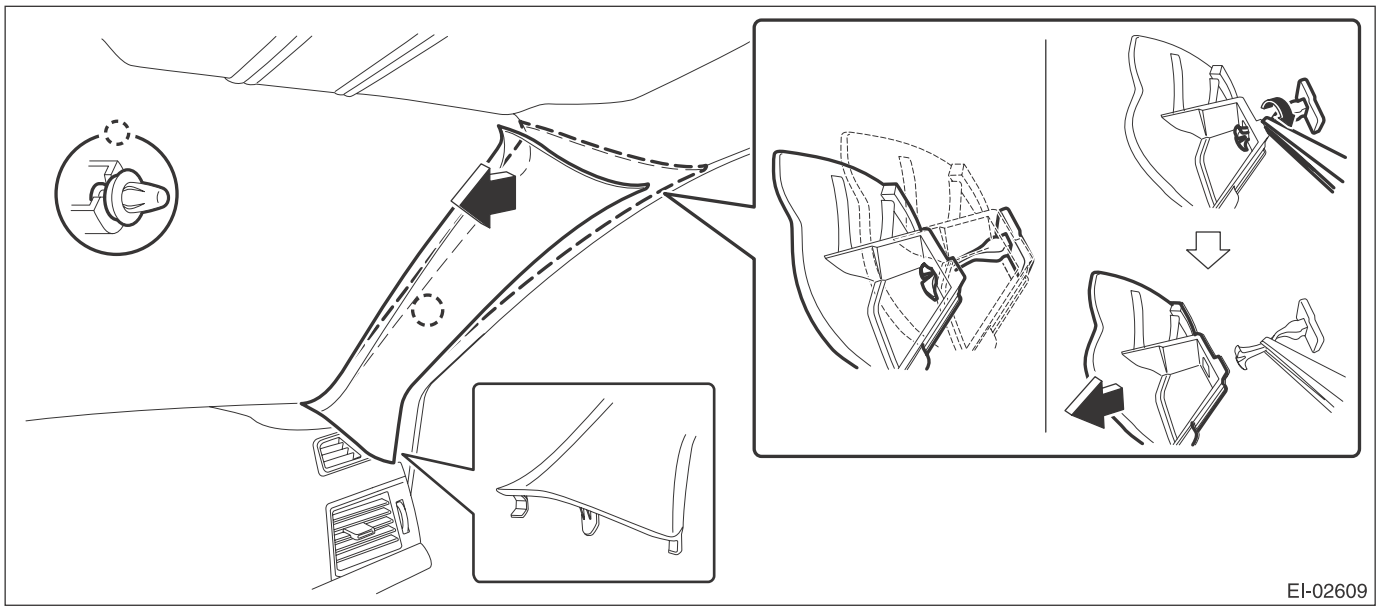

10) Release the claws, and then remove the left and right side sill cover-front INN.

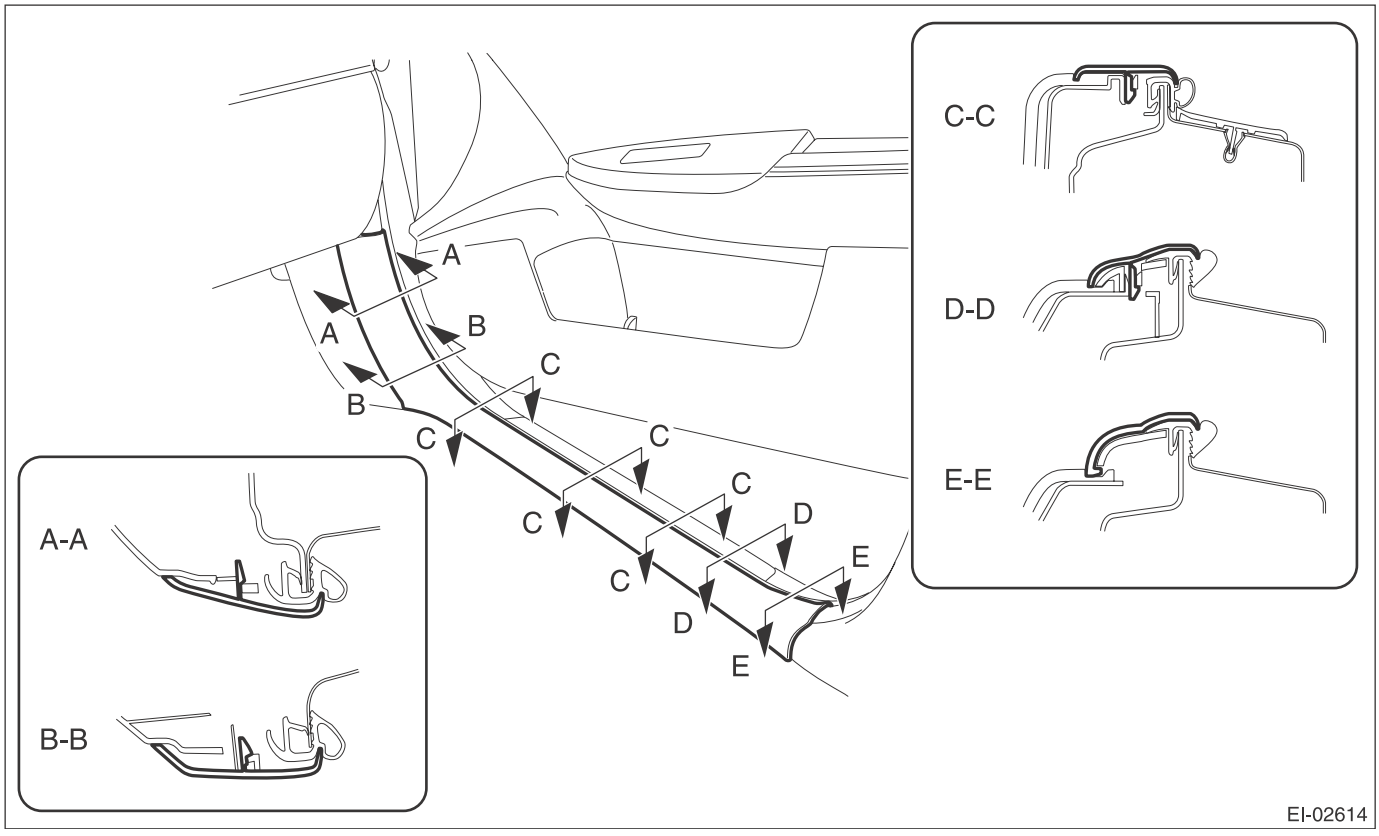

CAUTION:
Do not pull with excessive force. Doing so may damage the claws of the side sill cover INN.

NOTE:
To release the claws of the side sill cover INN, the following steps are recommended.
1. Take out the weather strip from under the side sill cover INN.
2. Turn over the floor mat and release the claw (C) by accessing from behind the side sill cover INN.

11) Remove the left and right center pillar trim LWR.
(1) Release the clip by pulling the center pillar trim LWR toward you.
(2) Expand the claws of center pillar trim LWR outward and remove it from the center pillar trim UPR.

CAUTION:
Do not expand the center pillar trim LWR excessively. Doing so may damage the trim.

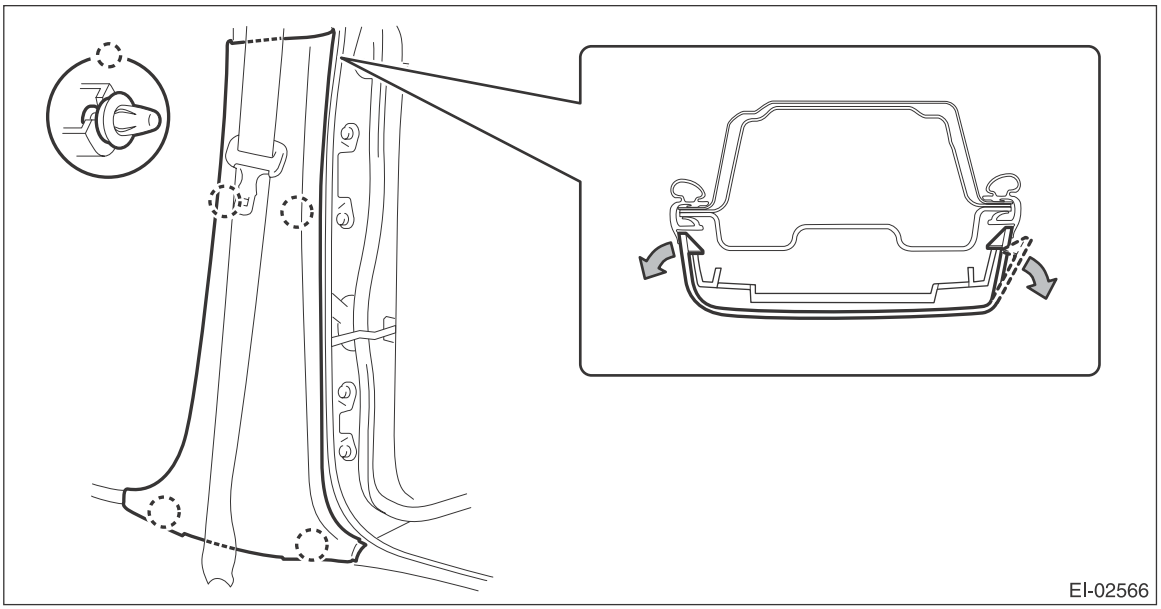
EI-02566

NOTE:
First release the claw located to the rear of the vehicle.
12) Remove the center pillar trim UPR.
(1) Remove the seat belt lower anchor bolt.

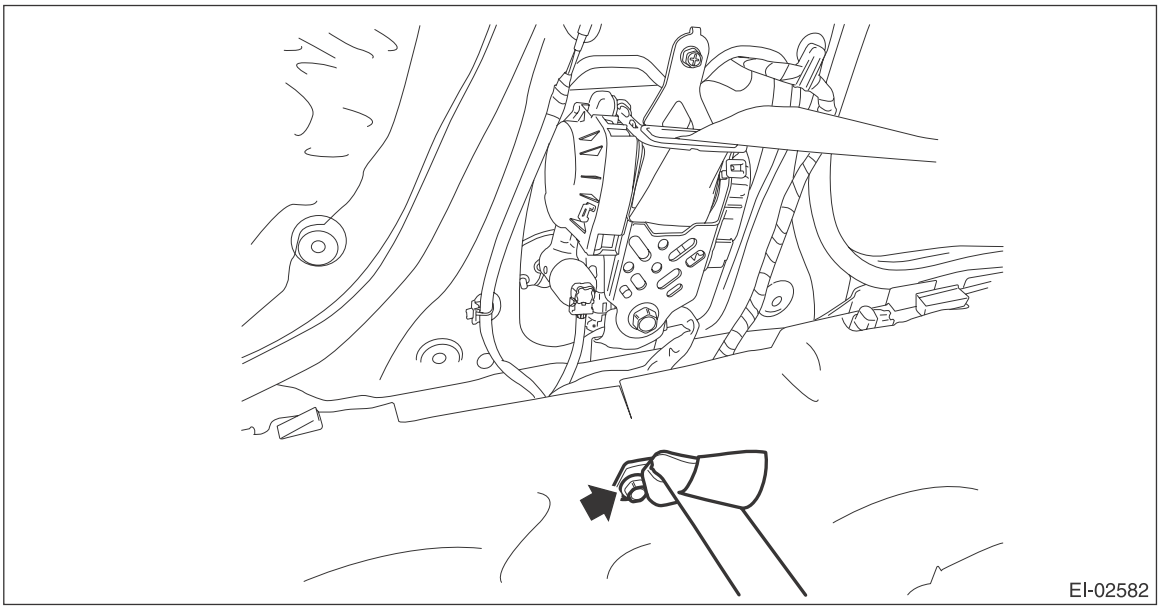
EI-02582

(2) Release the clip by pulling the lower part of the trim toward you.

(3) Remove the clip by pulling the upper part of the trim toward you, and while lowering the entire trim, remove the center pillar trim UPR.

CAUTION:
Do not reuse the upper clips of the center pillar trim UPR. Once the clip is removed, its holding force is reduced. Be sure to replace it with a new clip.

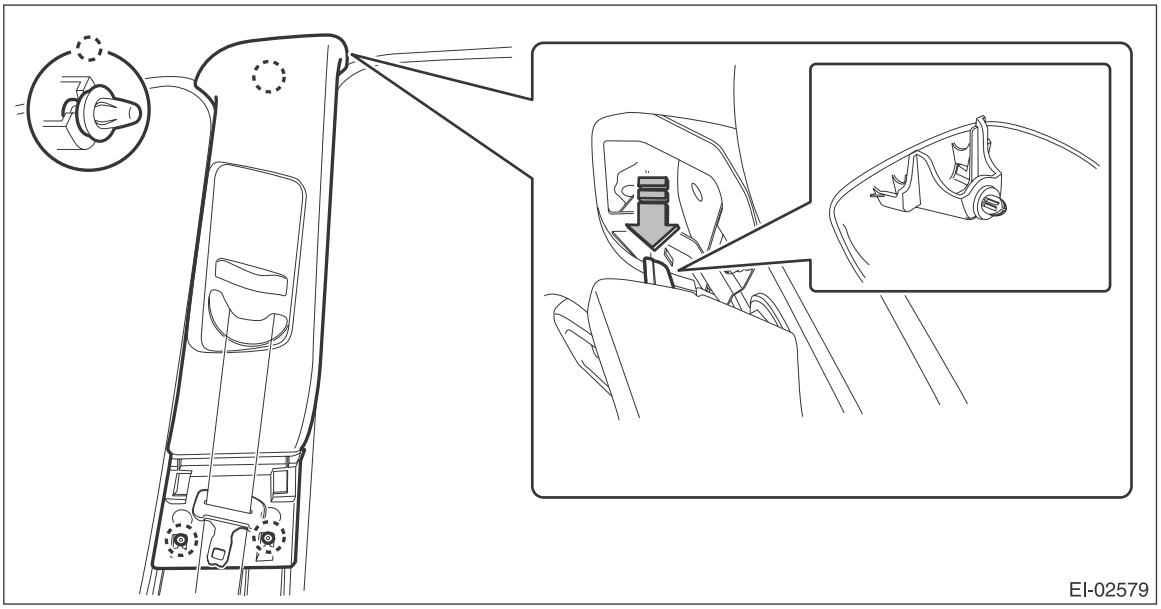

(4) Pull out the seat belt and remove the center pillar trim UPR.

13) Remove the overhead console assembly.
(1) Push and open the rear end of the overhead console lid, and remove the screws.
(2) Disconnect the connector and remove the overhead console assembly.

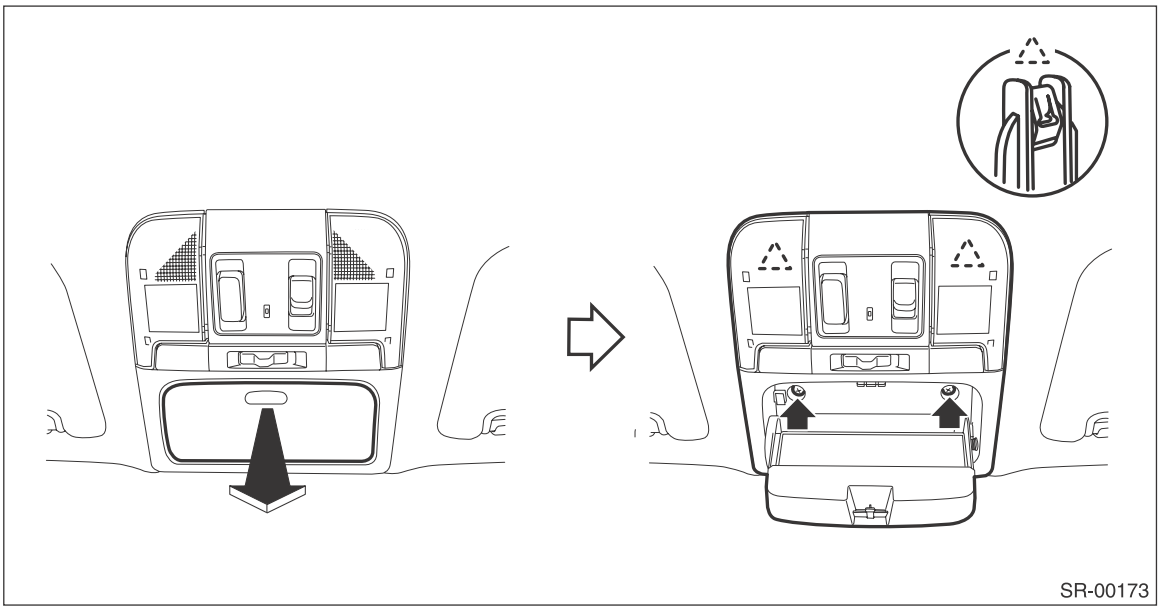

14) Remove the left and right sun visor assembly.
(1) Remove the cover, loosen the screws, and remove the sun visor assembly.
(2) Press the both sides of the sun visor hook using a flat tip screwdriver.
(3) Remove the sun visor hook by pulling toward you.

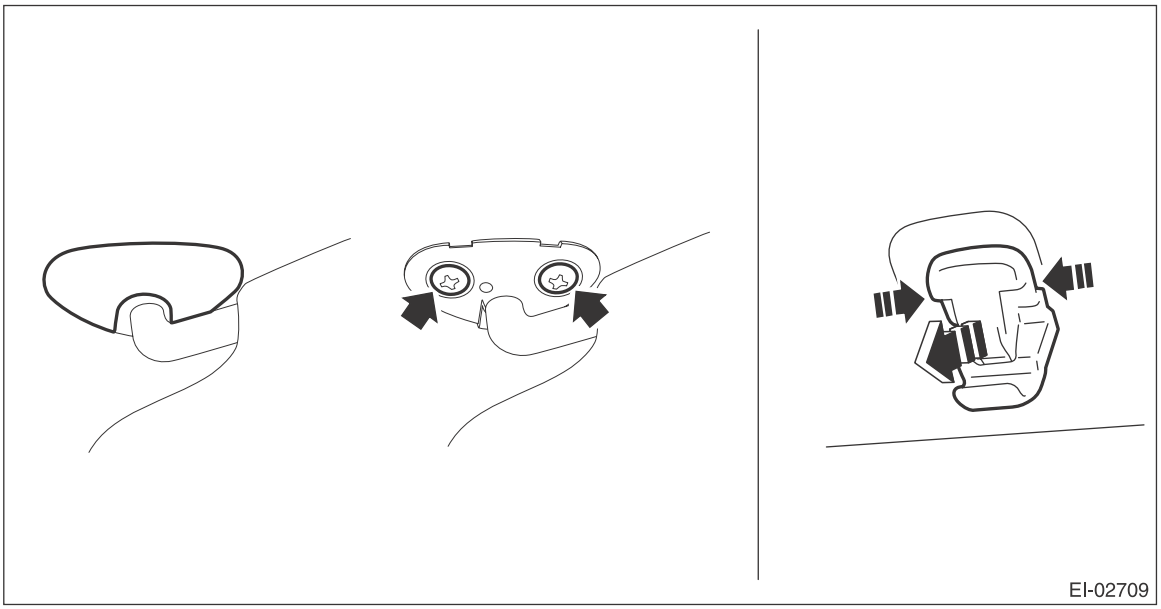

15) Remove the room light assembly.
(1) Release the claws and remove the cover.
(2) Remove the two screws.

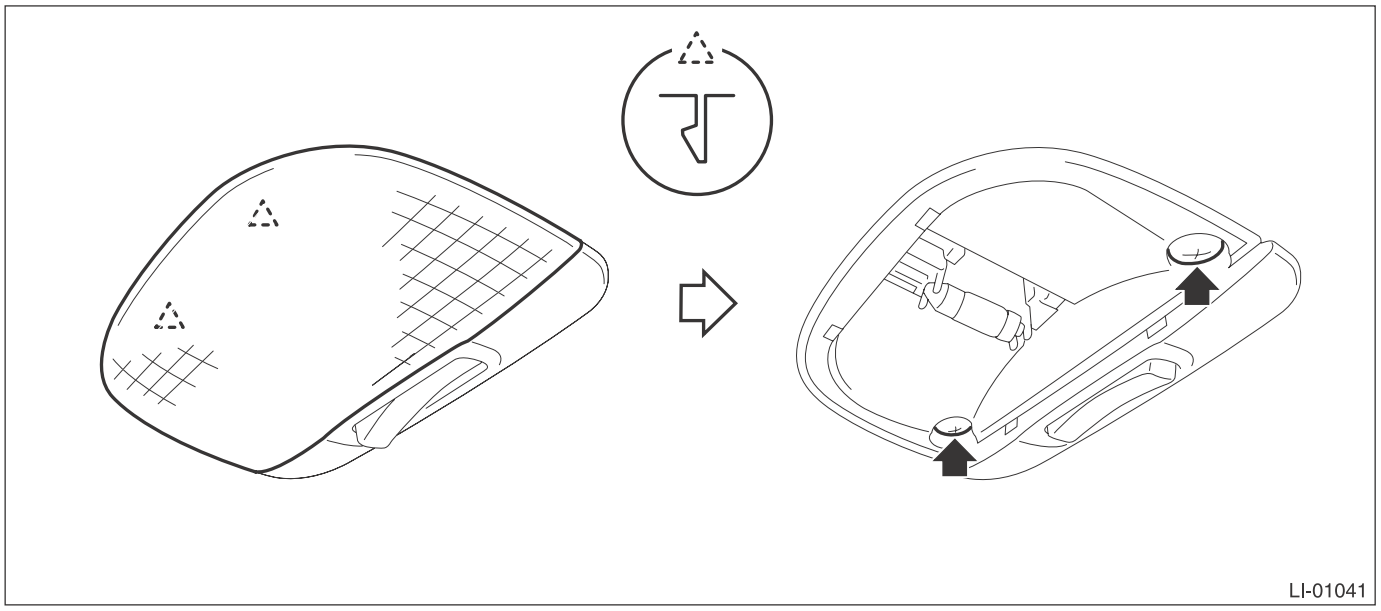

(3) Disconnect the connector and remove the room light assembly.

16) Remove the luggage light.
(1) Release the claws and remove the luggage room light main body.
(2) Disconnect the connector and remove the luggage room light.

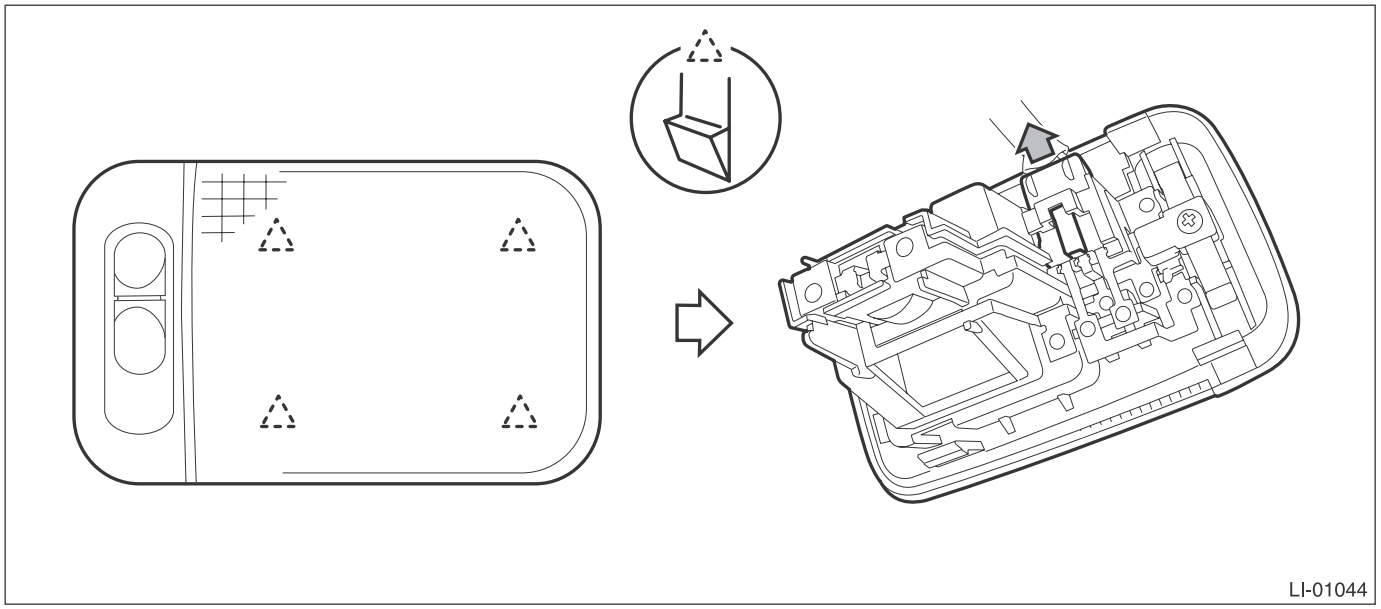

17) Remove all assist grip assembly.
(1) Remove the cap (a) by pulling the both sides of the cap (a) using a flat tip screwdriver wrapped with a protection tape.
(2) Pull the assist grip toward you (to the vehicle center) and remove the metal clip from the bracket.

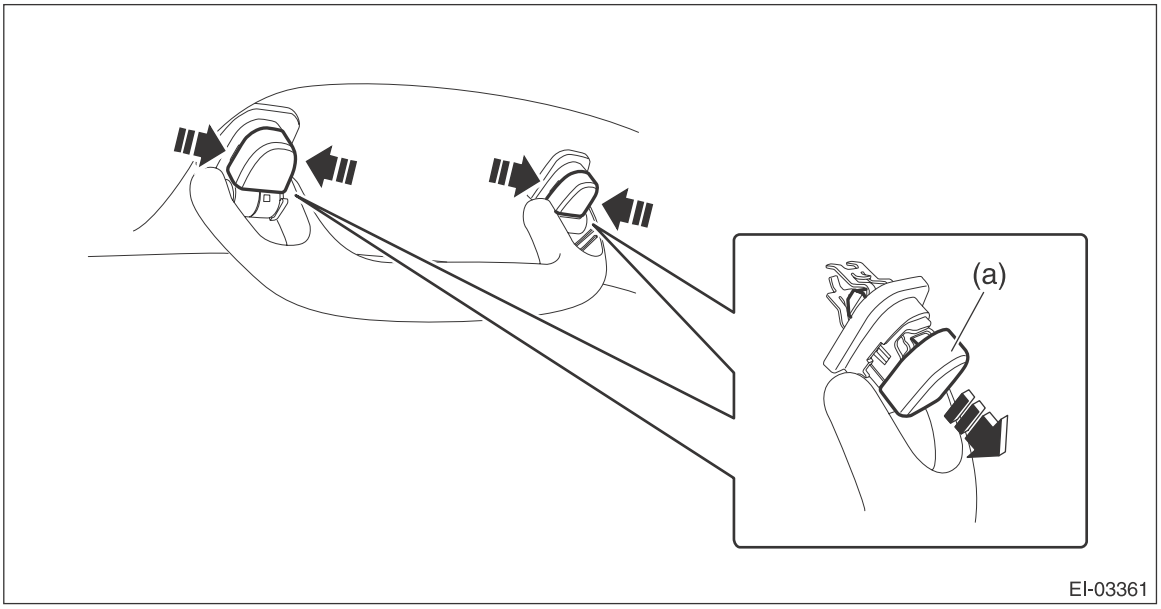

18) Remove the sun roof garnish. (Model with sunroof)

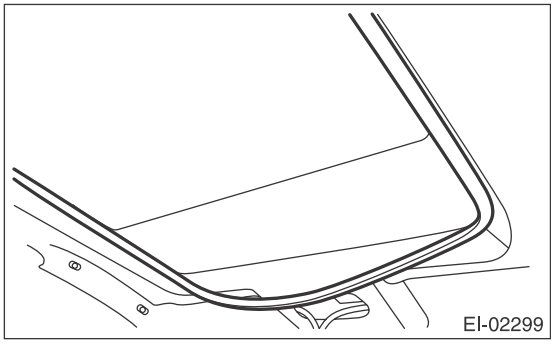

19) Disconnect the roof harness connector at the front pillar RH.
20) Remove the roof trim assembly.
(1) Release the clips and remove the feeder cord and roof cord from the roof trim.
(2) Take out the roof trim assembly from the rear gate opening to outside.

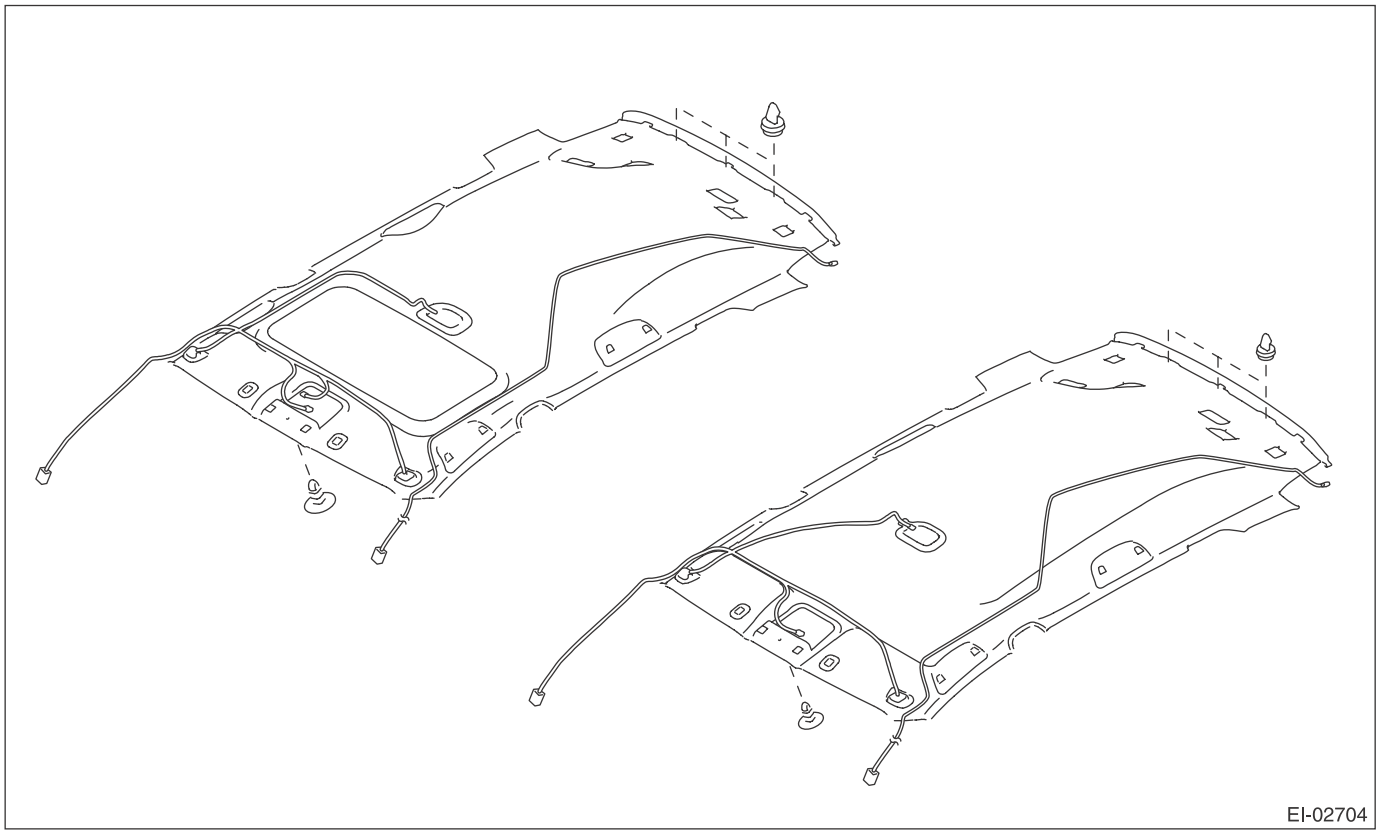

B: INSTALLATION

1) Attach the feeder cord and roof cord to the roof trim.

CAUTION:
Route each cord carefully. If not doing so, the cord may interfere, thus preventing normal deployment of the curtain airbag when necessary.

Tape:
Item number: 86359SC000/TAPE

NOTE:
Use the replacement part after cutting into the size of 80 mm × 50 mm (3.2 in × 2.0 in).

- Sedan model

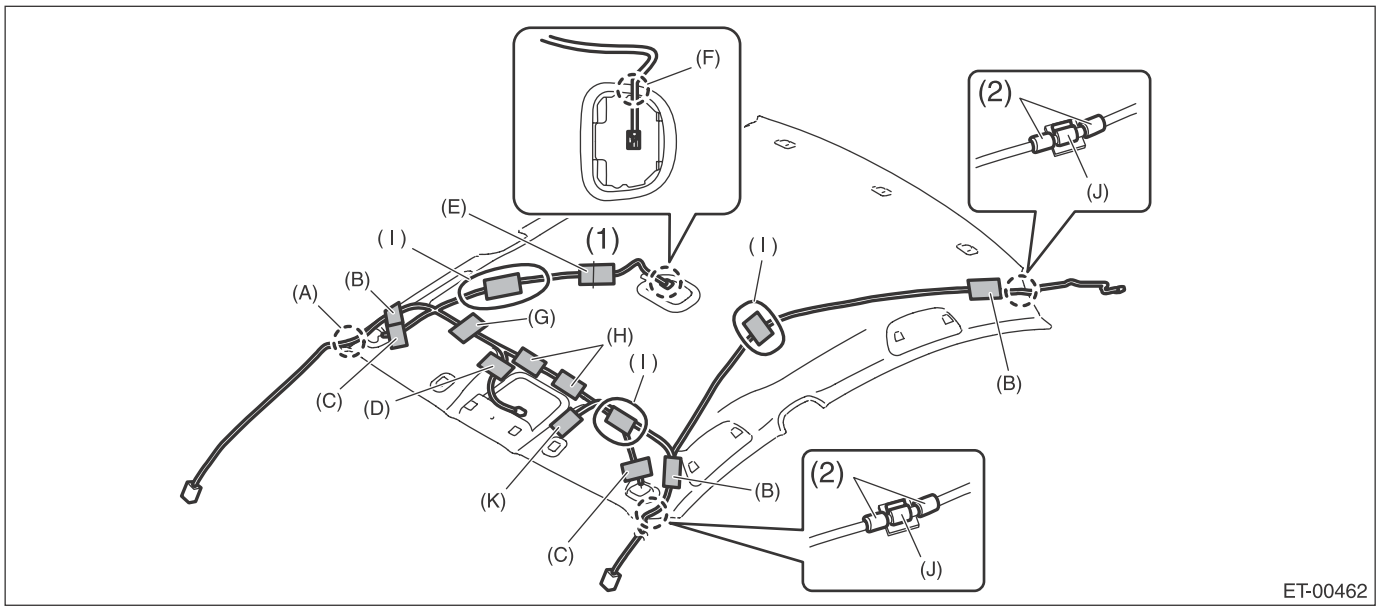

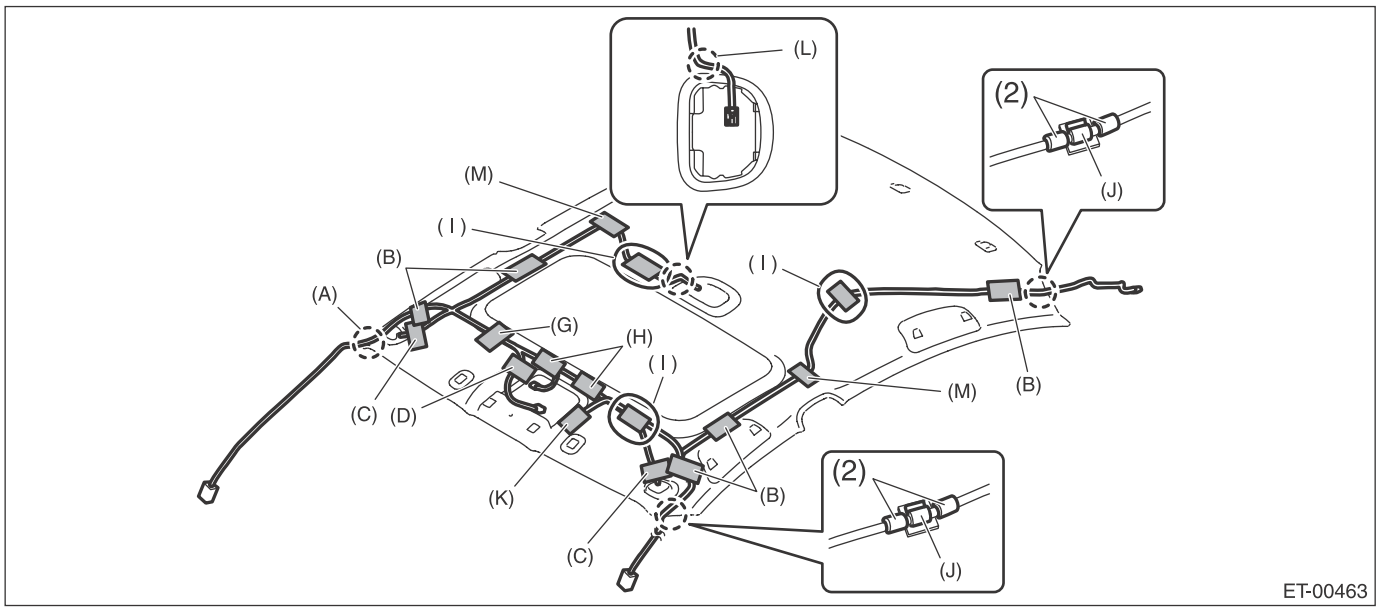

(1) Mark-off line

(2) Urethane tape

(A) Fix the cord by aligning the center of cord marking (white) with the clamp.

(B) Fix with the tape so that the cord does not contact on the assist grip face.

(C) Adjust the cord protrusion from the hole edge to 60±10 mm (2.4±0.4 in) and fix with the tape.

(D) Fix the portion right after cord branching point with the tape.

(E) Fix with the tape by aligning with mark-off line.

(F) Align the cord marking (white) to the center, and adjust the protrusion.

(G) Fix with the tape so that the cord is routed along the center position of sun visor.

(H) Fix the rear, left and right of the hole with the tape.

(I) Fix with the tape by adjusting the excess portion of cord at the (I) position.

(J) Fix the portion between urethane tapes (2) by aligning it with the clamp.

(K) Fix the pre-wire connector with the tape.

(L) Route the cord marking (white) under the clamp.

(M) Fix the cord at the pad rear end with the tape.

- OUTBACK model

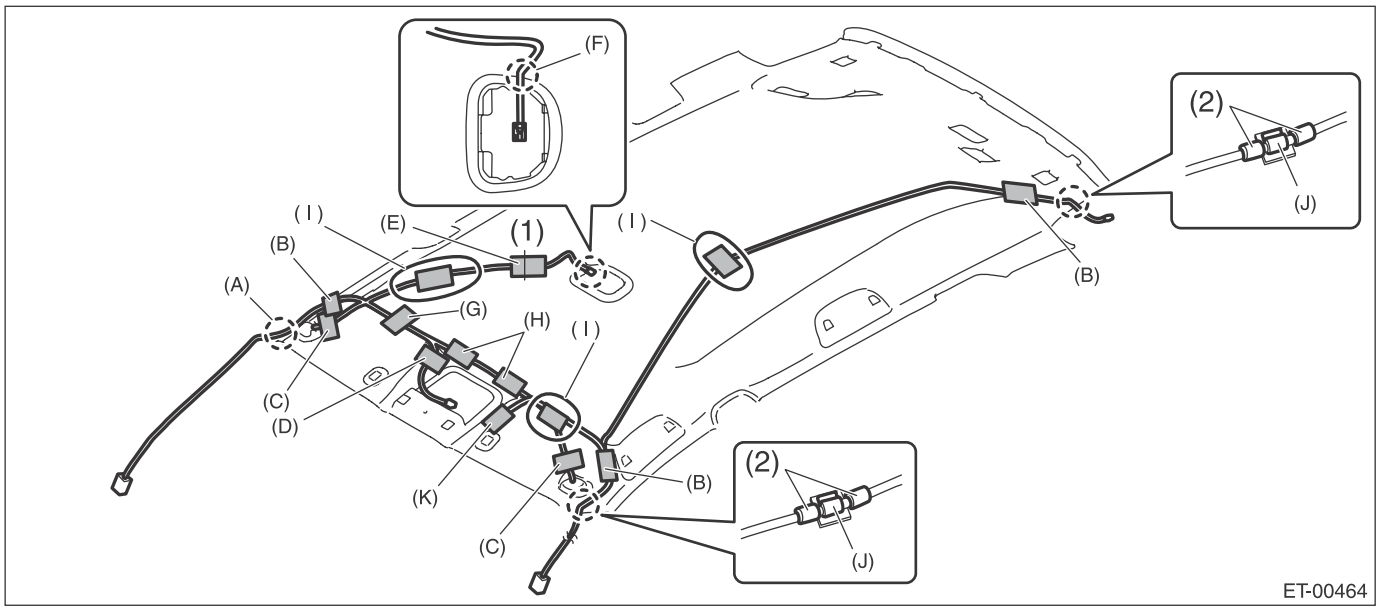

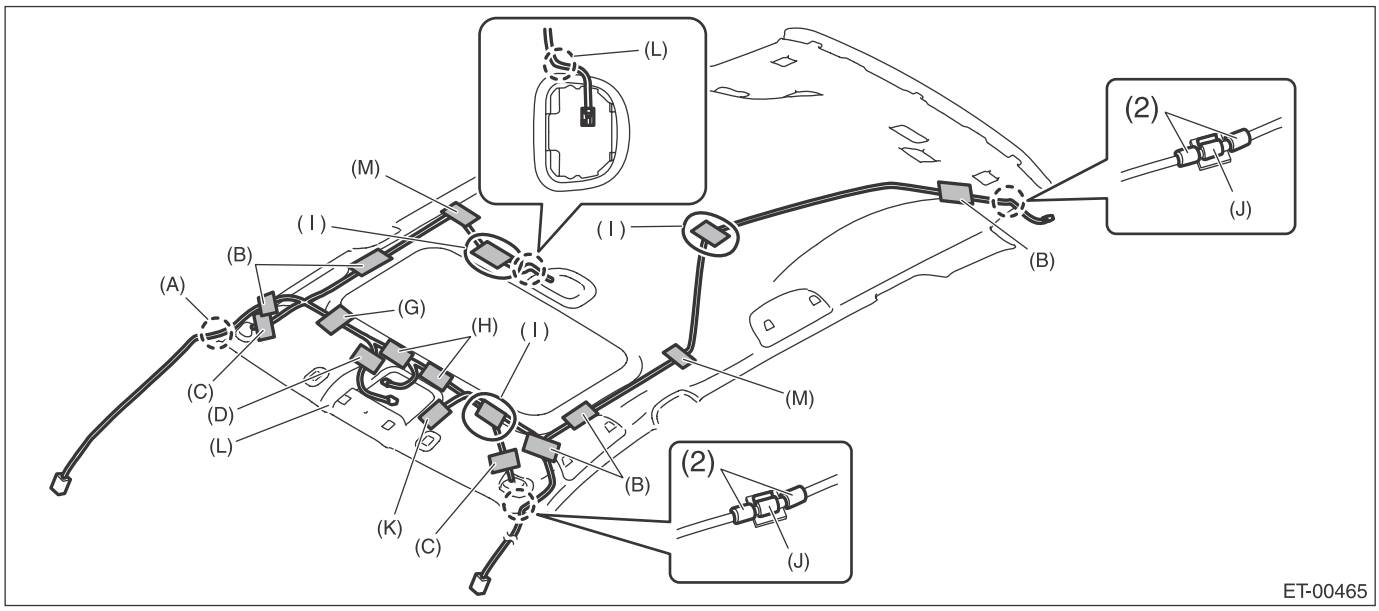

(1) Mark-off line

(2) Urethane tape

(A) Fix the cord by aligning the center of cord marking (white) with the clamp.

(B) Fix with the tape so that the cord does not contact on the assist grip face.

(C) Adjust the cord protrusion from the hole edge to 60±10 mm (2.4±0.4 in) and fix with the tape.

(D) Fix the portion right after cord branching point with the tape.

(E) Fix with the tape by aligning with mark-off line.

(F) Align the cord marking (white) to the center, and adjust the protrusion.

(G) Fix with the tape so that the cord is routed along the center position of sun visor.

(H) Fix the rear, left and right of the hole with the tape.

(I) Fix with the tape by adjusting the excess portion of cord at the (I) position.

(J) Fix the portion between urethane tapes (2) by aligning it with the clamp.

(K) Fix the pre-wire connector with the tape.

(L) Route the cord marking (white) under the clamp.

(M) Fix the cord at the pad rear end with the tape.

2) Install each part in the reverse order of removal.

CAUTION:
• Do not reuse the tether clips on the upper part of the front pillar trim. Always replace with a new part.
Once the tether clip is removed from the pillar trim, the retention power deteriorates and the front pillar trim may come off.
• Do not reuse the clips on the upper part of the center pillar trim. Once the clip is removed, its holding force is reduced. Be sure to replace it with a new clip.
• Before installing the front pillar trim, check the condition of (white) protective unwoven cloth of curtain airbag. If it is damaged (airbag module cloth is exposed), replace the curtain airbag module assembly with a new part.
• If the hook is disconnected from the vehicle body, replace the hook with the new part to prevent the decline of the fixed force of the seat.

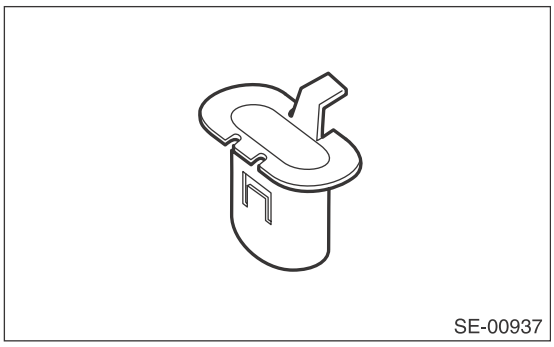
SE-00937

28.Rear Gate Trim

A: REMOVAL

1) Remove the rear gate upper trim.
   (1) Remove the claws on the trim edge.
   (2) Disconnect the claws in the center of trim, and remove the rear gate upper trim.

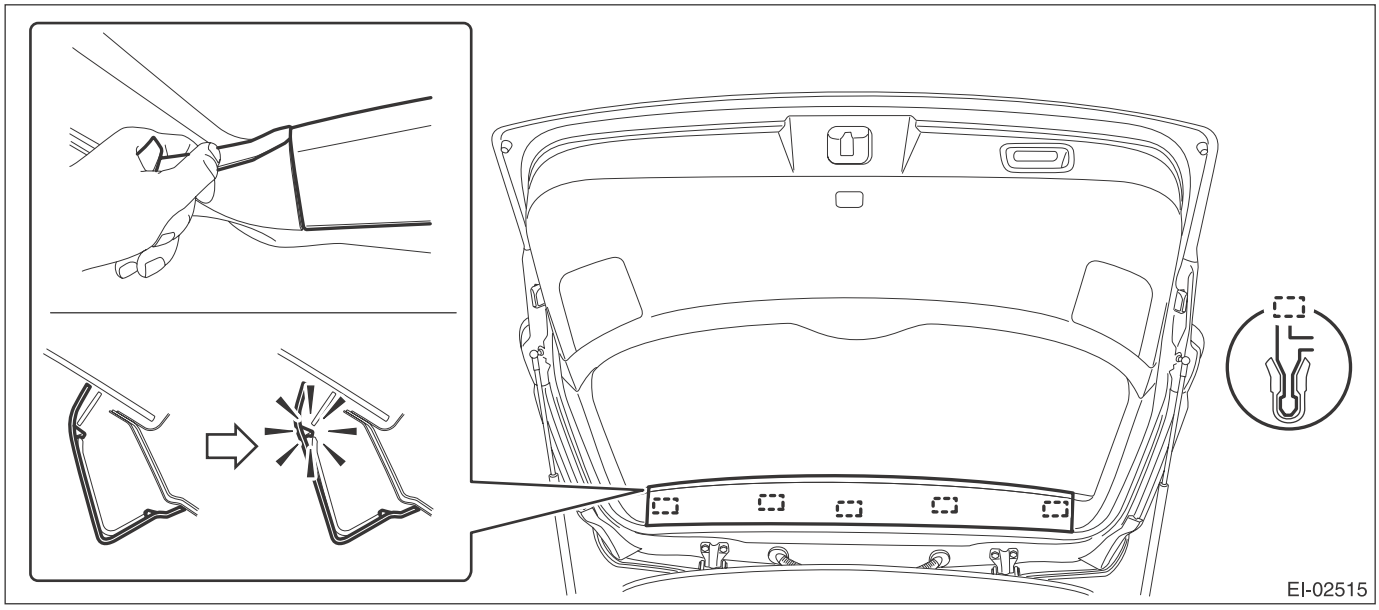

2) Remove the rear gate pillar trim.
   (1) Release the claws.
   (2) Remove the claws on the bottom of trim, and remove the rear gate pillar trim.

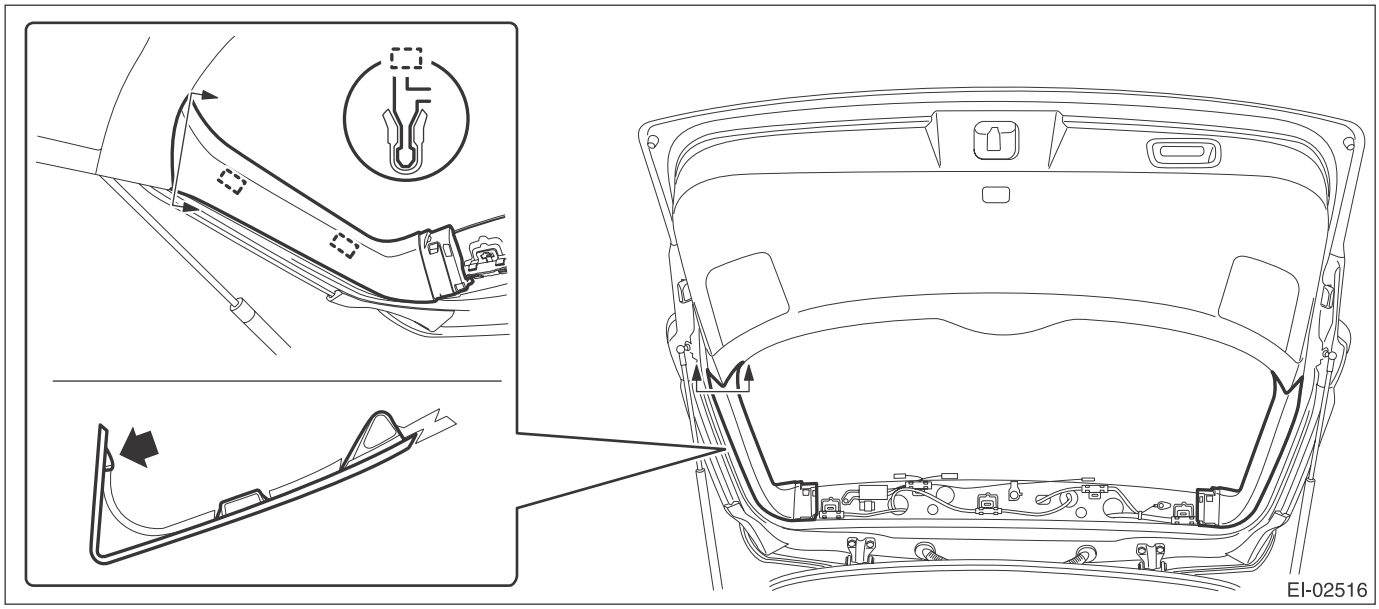

3) Remove the hand grip of rear gate.

CAUTION:
- **Be careful not to scratch the trim.**
- **To protect the trim from damage, attach a protective tape to the tool in use.**
  (1) Insert a precision screwdriver (a).
  (2) With the precision screwdriver inserted, push down the claw to disengage and pull it toward yourself.

(3) Remove the screws and detach the hand grip.

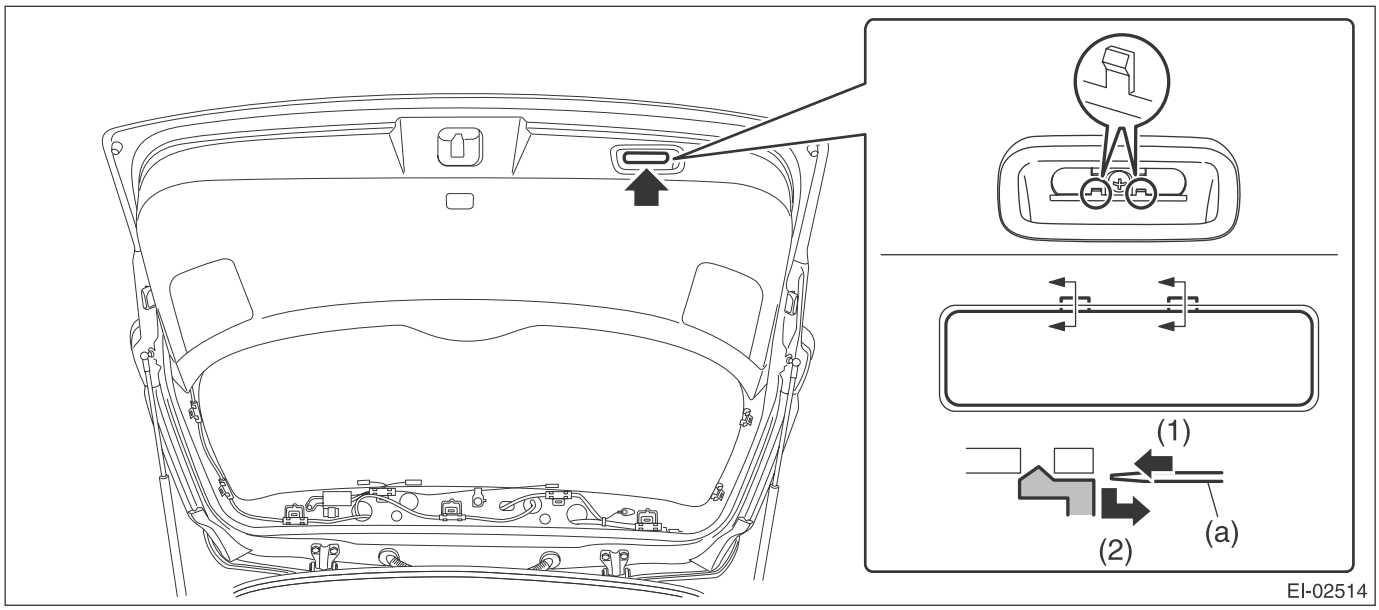

4) Remove the clips and rear gate lower trim.
(1) Remove the clips on both ends.
(2) Release the clips and remove the rear gate lower trim.

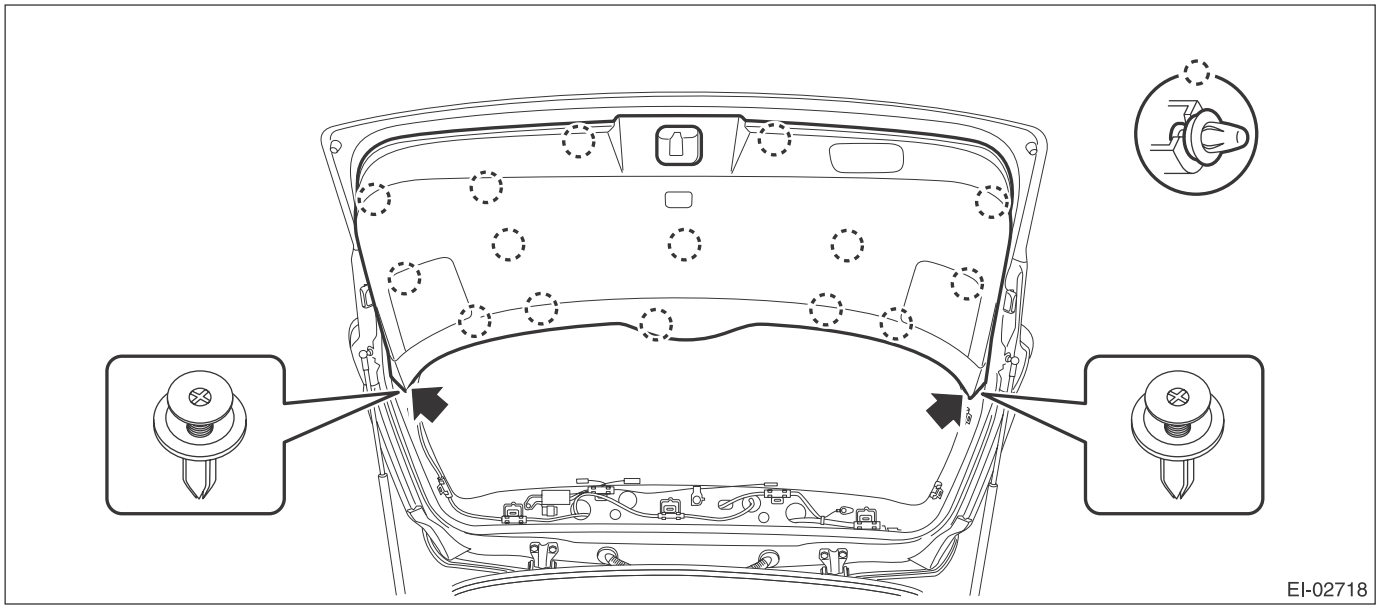

B: INSTALLATION

Install each part in the reverse order of removal.

29.Floor Mat

A: REMOVAL

1) Remove the front seat assembly. <Ref. to SE-10, REMOVAL, Front Seat.>
2) Remove the rear seat cushion assembly. <Ref. to SE-32, REMOVAL, Rear Seat.>
3) Remove the console box assembly. <Ref. to EI-72, REMOVAL, Console Box.>
4) Remove the console front side cover. <Ref. to EI-69, CONSOLE FRONT COVER, REMOVAL, Center Console.>
5) Remove the lower inner trim. <Ref. to EI-95, REMOVAL, Lower Inner Trim.>
6) Take out the floor mat from the vehicle.
   (1) Remove the clips from the floor mat.
   (2) Remove the mat hook on both sides.
   (3) Take out the floor mat after folding down.

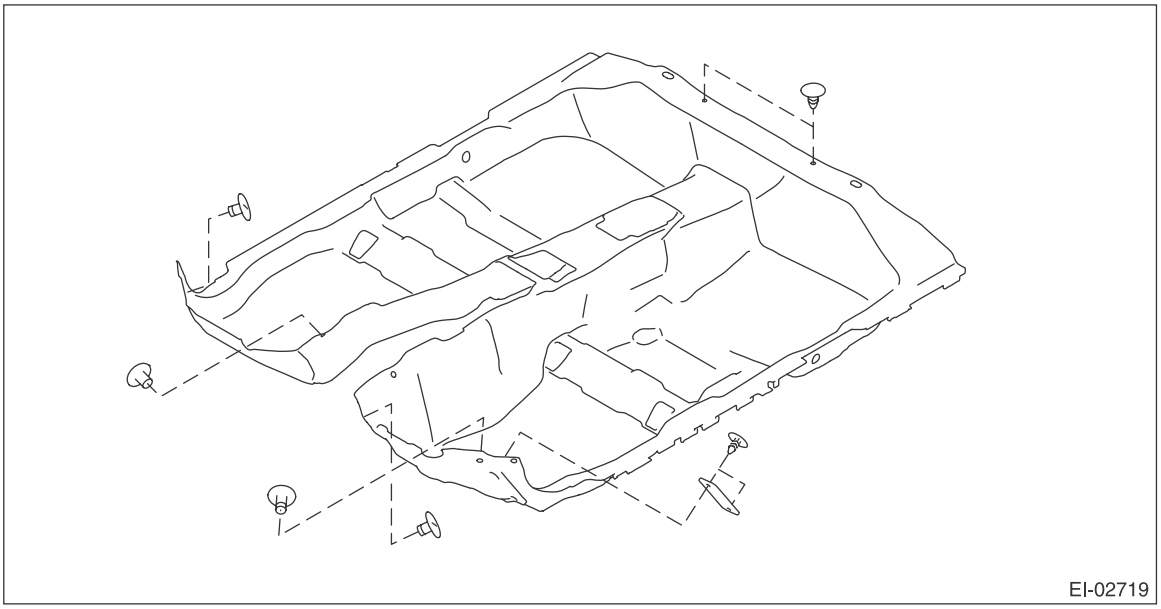

B: INSTALLATION

Install each part in the reverse order of removal.

NOTE:
Secure the mat firmly with hook and clip.

30.Trunk Lid Garnish

A: REMOVAL

1) Remove the trunk lid trim.
   (1) Remove the trunk handle.
   (2) Remove the clips and the trunk lid trim.

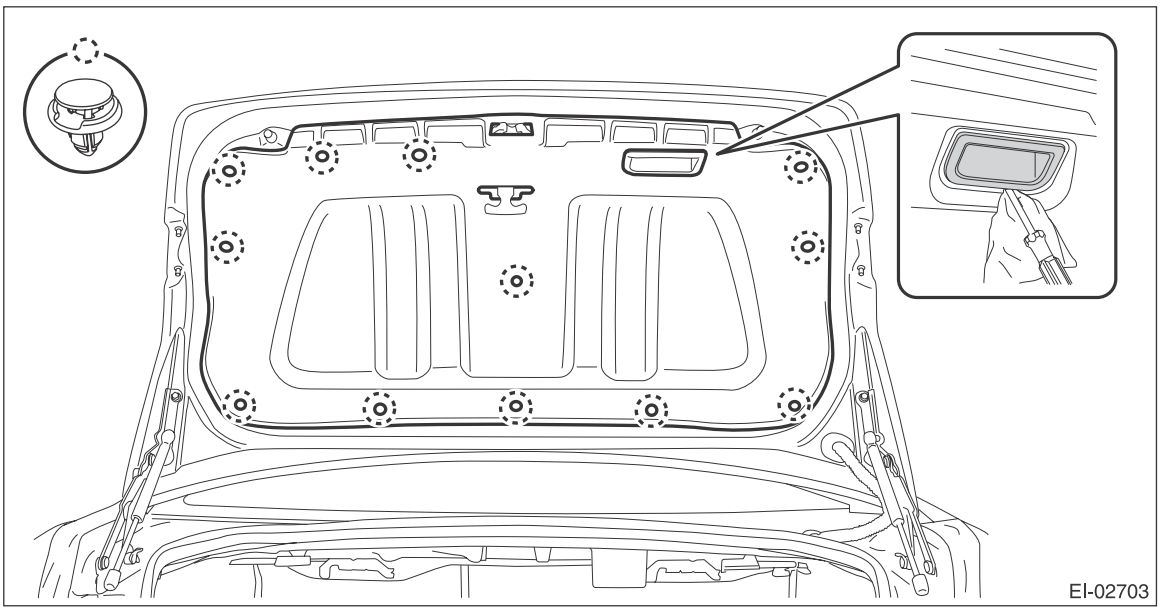

2) Remove the trunk lid garnish.
   (1) Remove the nuts.
   (2) Remove the clips and the trunk lid garnish.

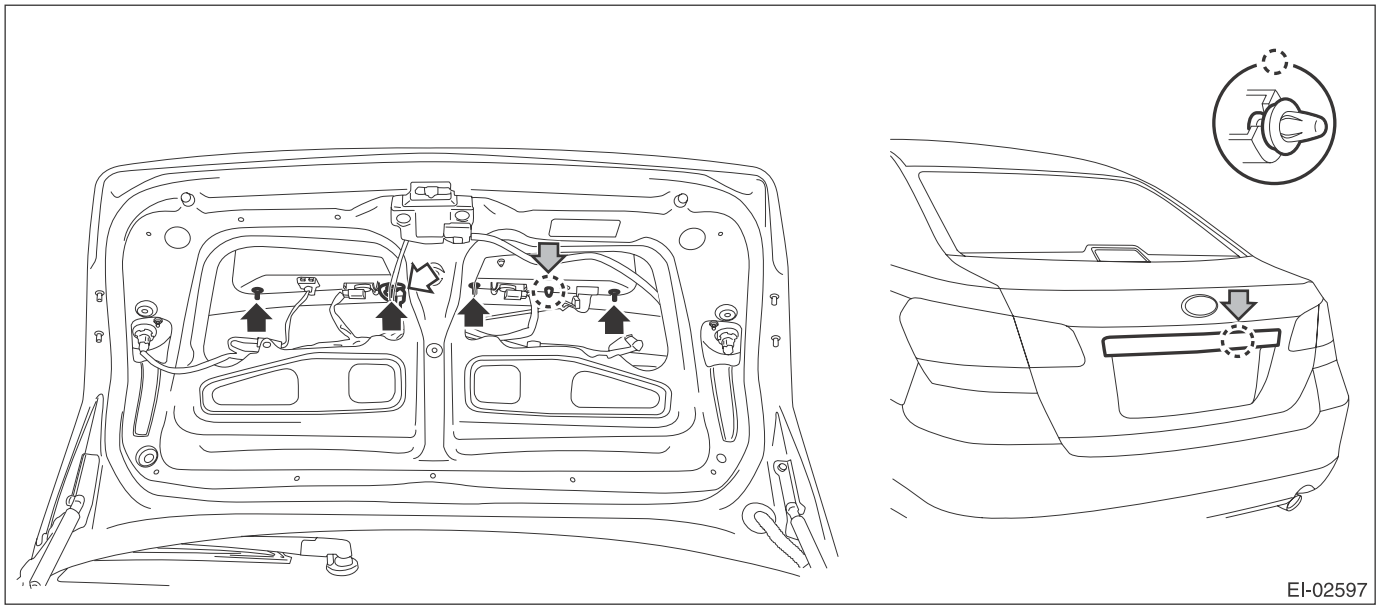

B: INSTALLATION

Install each part in the reverse order of removal.

Tightening torque:
4.5 N·m (0.46 kgf-m, 3.3 ft-lb)

31.Rear Gate Garnish

A: REMOVAL

1) Disconnect the ground cable from battery.
2) Remove the rear gate trim.
   (1) Remove the rear gate upper trim.
      a) Remove the claws on the trim edge.
      b) Disconnect the claws in the center of trim, and remove the rear gate upper trim.

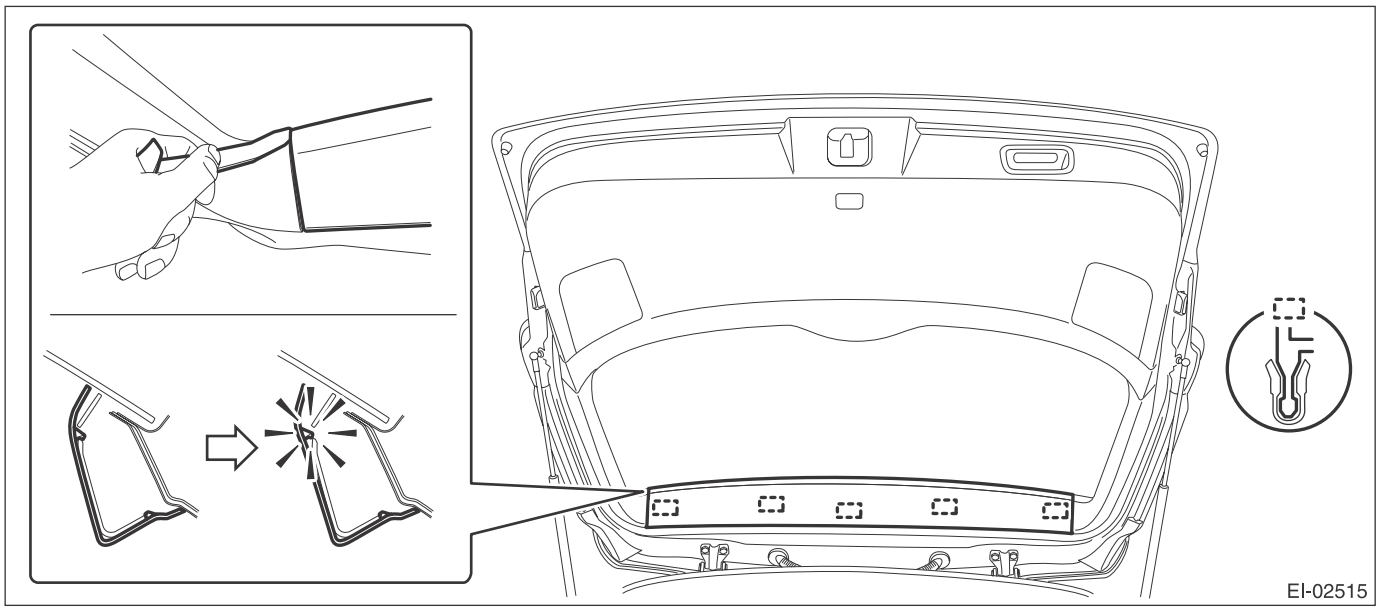

   (2) Remove the rear gate pillar trim.
      a) Release the claws.
      b) Remove the claws on the bottom of trim, and remove the rear gate pillar trim.

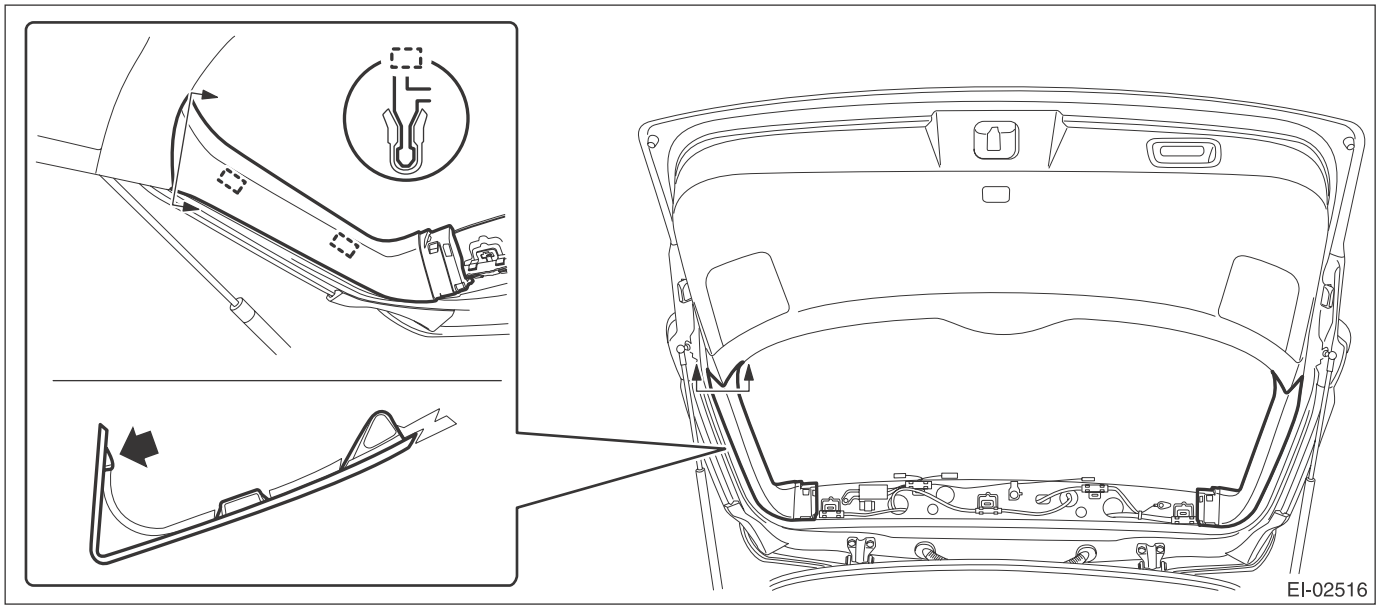

   (3) Remove the hand grip of rear gate.

CAUTION:
- **Be careful not to scratch the trim.**
- **To protect the trim from damage, attach a protective tape to the tool in use.**
      a) Insert a precision screwdriver (a).
      b) With the screwdriver inserted, push it down to release the claw and pull it toward you.

c) Remove the screws and detach the hand grip.

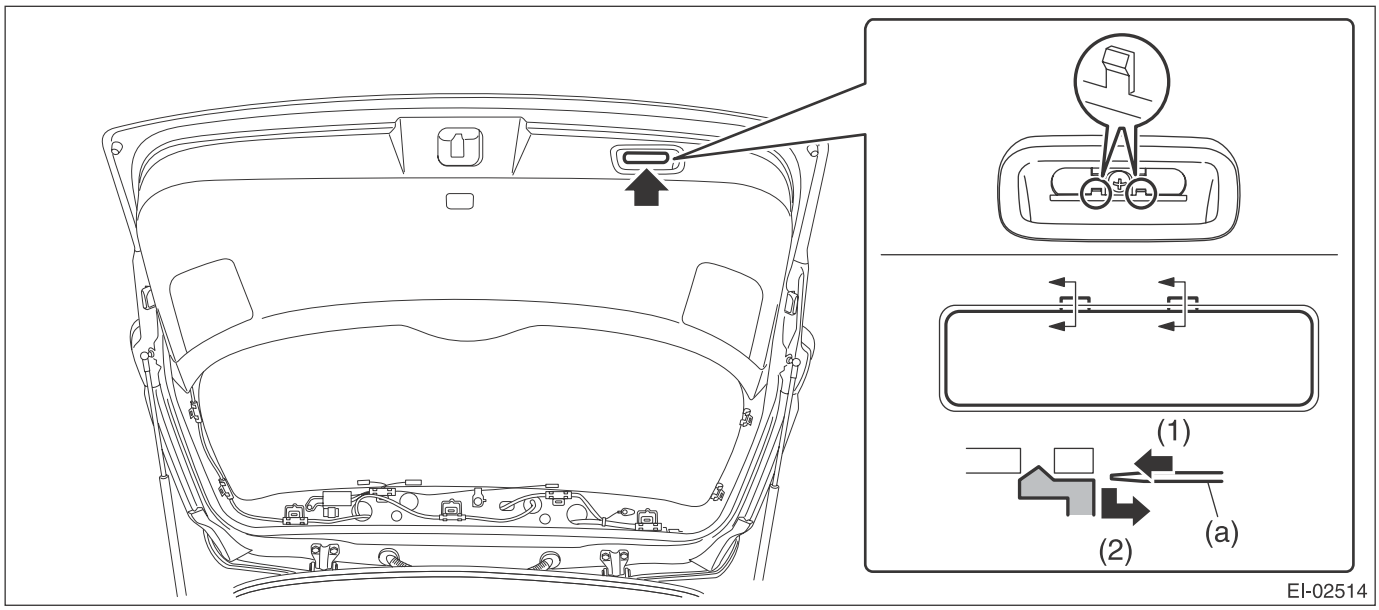

(4) Remove the rear gate lower trim.
a) Remove the clips on both ends.
b) Release the clips and remove the rear gate lower trim.

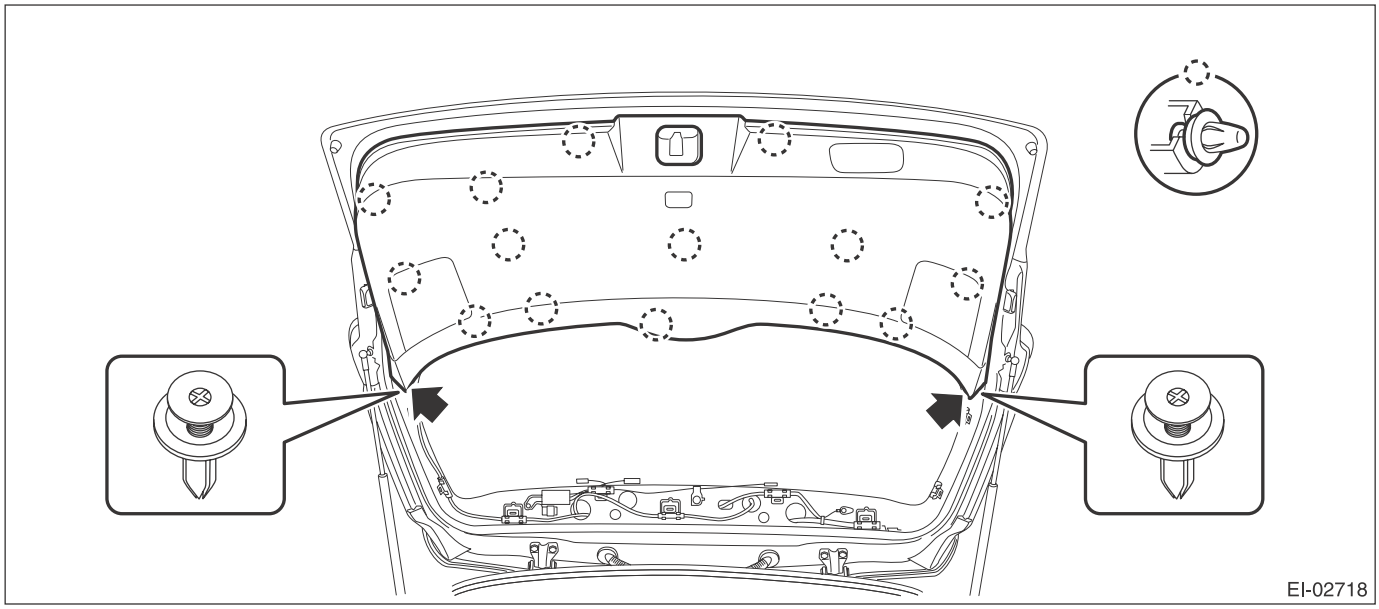

3) Remove the rear gate garnish.

(1) Release the clips and claws, then detach the rear finisher light side cover.

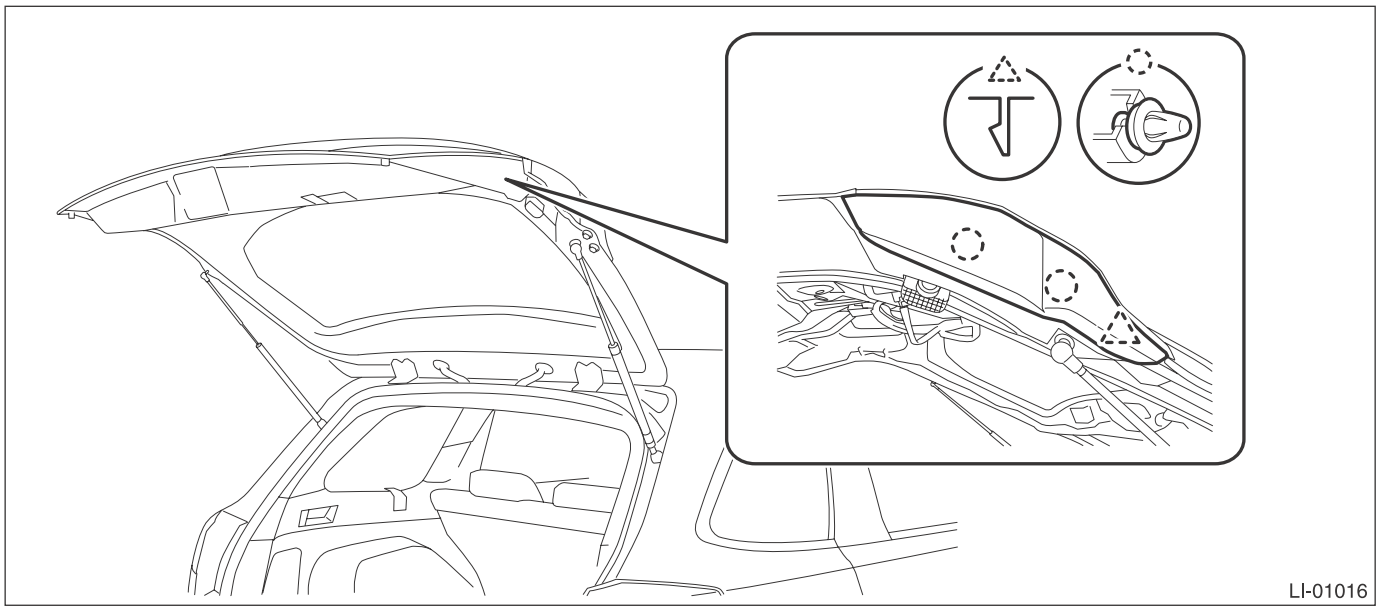

(2) Disconnect the harness connector of license plate light assembly.
(3) Remove the nuts.
(4) Remove the clips and the rear gate garnish.

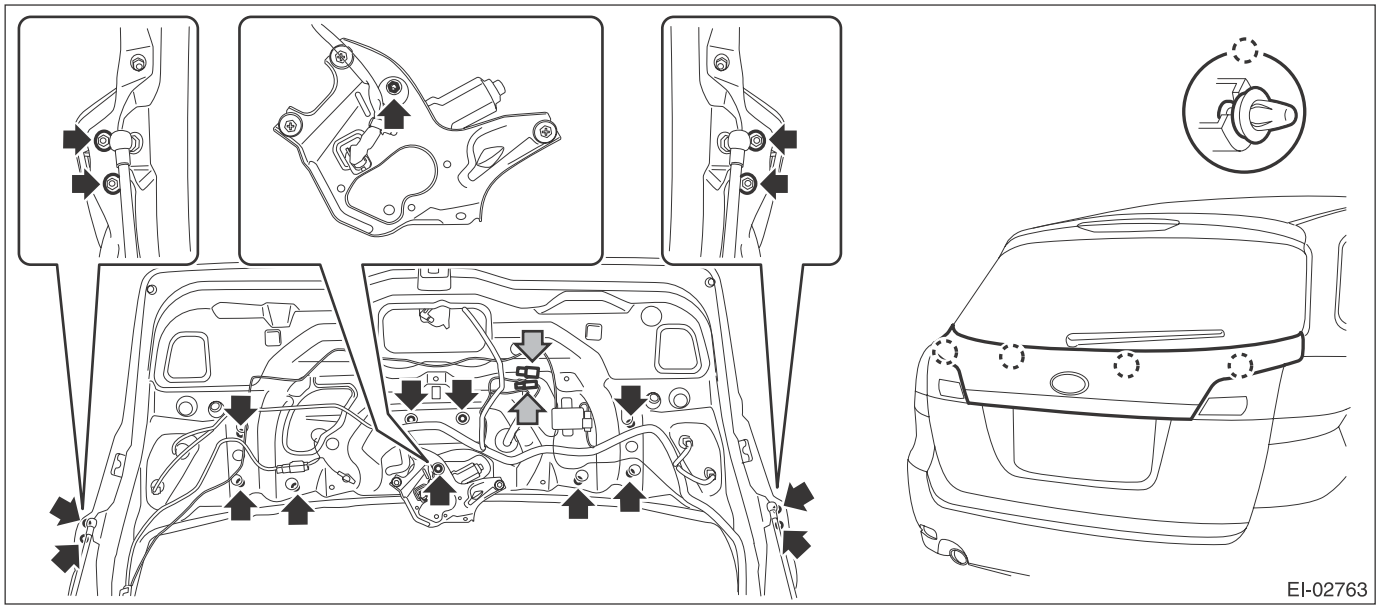

B: INSTALLATION

CAUTION:
Make sure that the harness grommet is installed securely.
Incomplete installation causes water leak.
Install each part in the reverse order of removal.

Tightening torque
Rear gate garnish: 4.5 N·m (0.46 kgf-m, 3.3 ft-lb)

32.Heat Shield Cover

A: REMOVAL

1. FRONT HEAT SHIELD COVER

1) Remove the center exhaust pipe.
- Turbo model <Ref. to EX(H4DOTC)-15, REMOVAL, Rear Exhaust Pipe.>
- Non-turbo model <Ref. to EX(H4SO)-8, REMOVAL, Rear Exhaust Pipe.>
- H6 model <Ref. to EX(H6DO)-8, REMOVAL, Rear Exhaust Pipe.>

2) Remove the four bolts to remove the front heat shield cover.

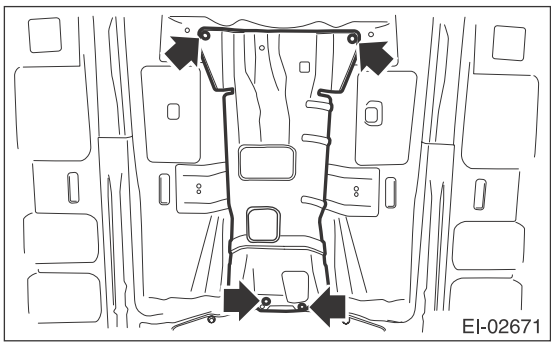

2. CENTER HEAT SHIELD COVER

1) Remove the rear exhaust pipe.
- Turbo model <Ref. to EX(H4DOTC)-15, REMOVAL, Rear Exhaust Pipe.>
- Non-turbo model <Ref. to EX(H4SO)-8, REMOVAL, Rear Exhaust Pipe.>
- H6 model <Ref. to EX(H6DO)-8, REMOVAL, Rear Exhaust Pipe.>

2) Remove the propeller shaft. (Turbo model only) <Ref. to DS-10, REMOVAL, Propeller Shaft.>
3) Remove the bolt (A), nuts (B), and clip (C), and remove the center heat shield cover.

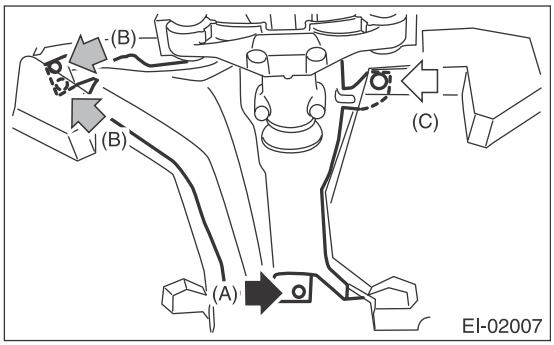

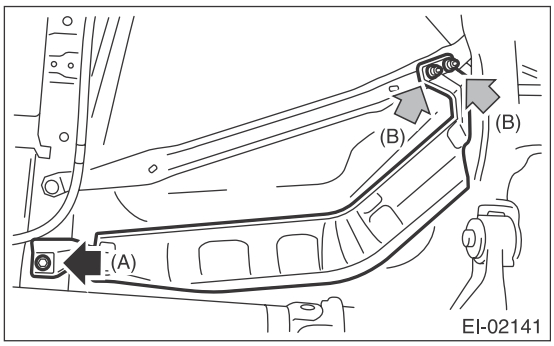

3. REAR HEAT SHIELD COVER

1) Remove the muffler.
- Turbo model <Ref. to EX(H4DOTC)-16, REMOVAL, Muffler.>
- Non-turbo model <Ref. to EX(H4SO)-9, REMOVAL, Muffler.>
- H6 model <Ref. to EX(H6DO)-9, REMOVAL, Muffler.>

2) Remove the bolts, and remove the rear heat shield cover.

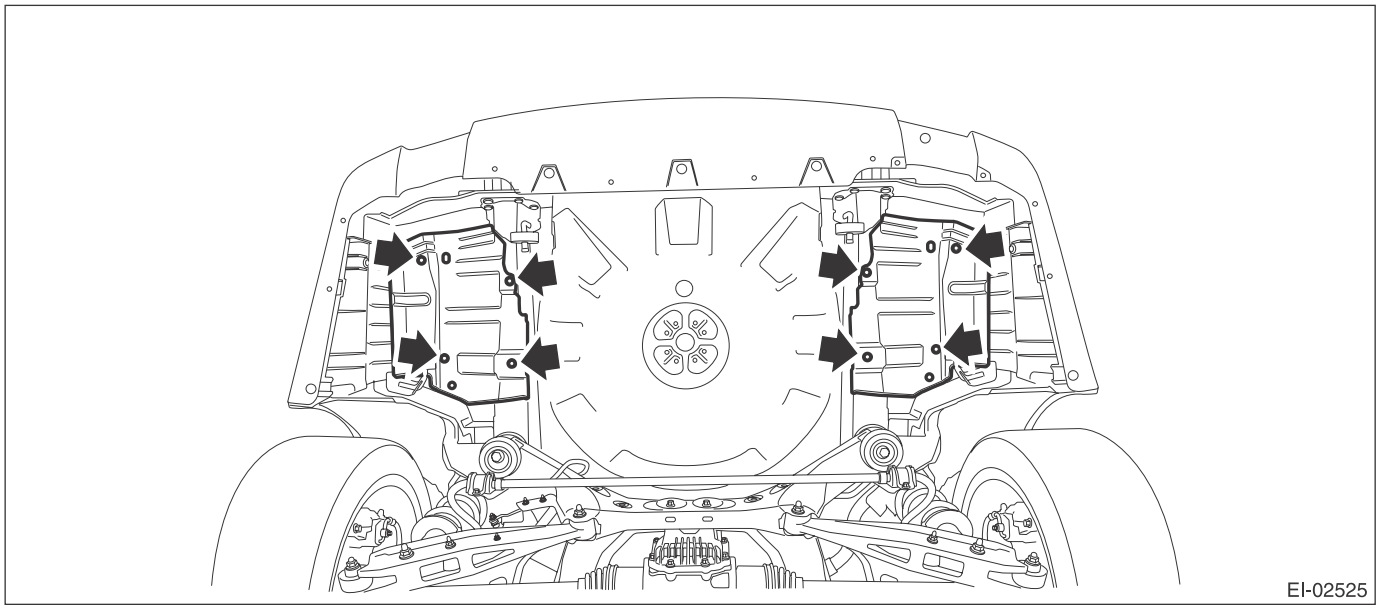

B: INSTALLATION

Install each part in the reverse order of removal.

Tightening torque:
Refer to "COMPONENT" of "General Description". <Ref. to EI-25, HEAT SHIELD COVER, COMPONENT, General Description.>

33.Ornament

A: INSTALLATION

1. LETTER MARK

Adhere the letter mark according to the following measurements.

- Sedan model

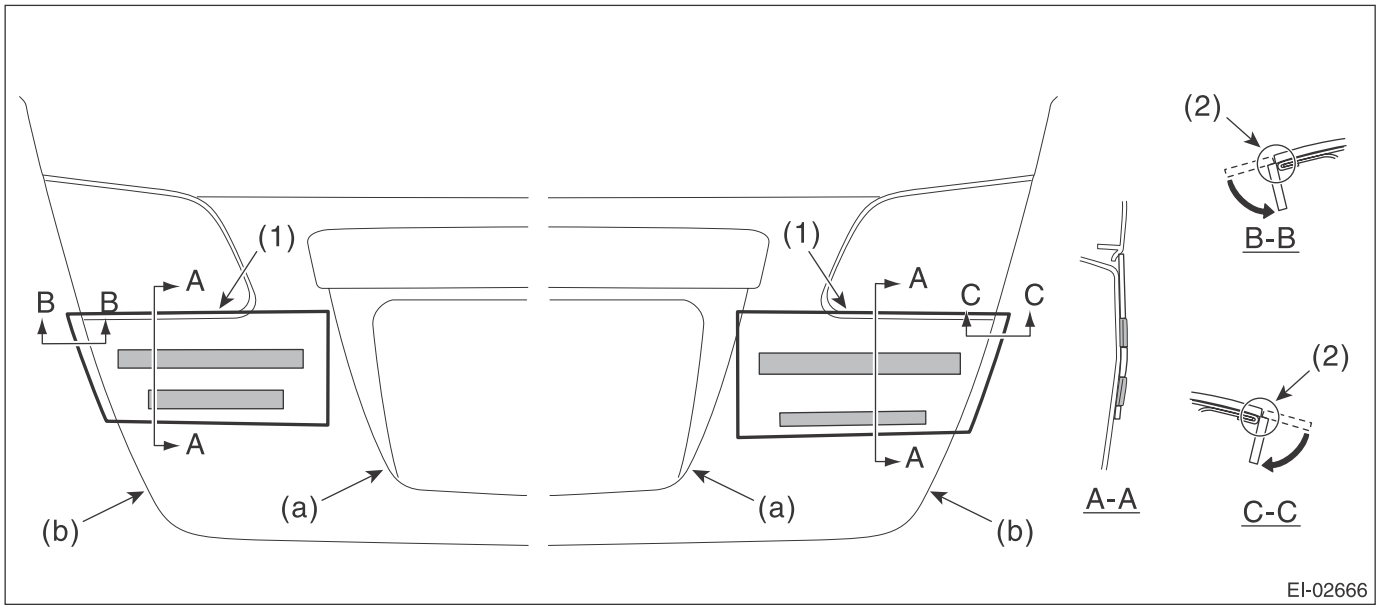

(a) Character line

(b) Trunk lid panel end

(1) Align the top end of application tape to the rear finisher light.

(2) Align the slit of application tape to the end of trunk lid panel and break off the application tape.

- OUTBACK model

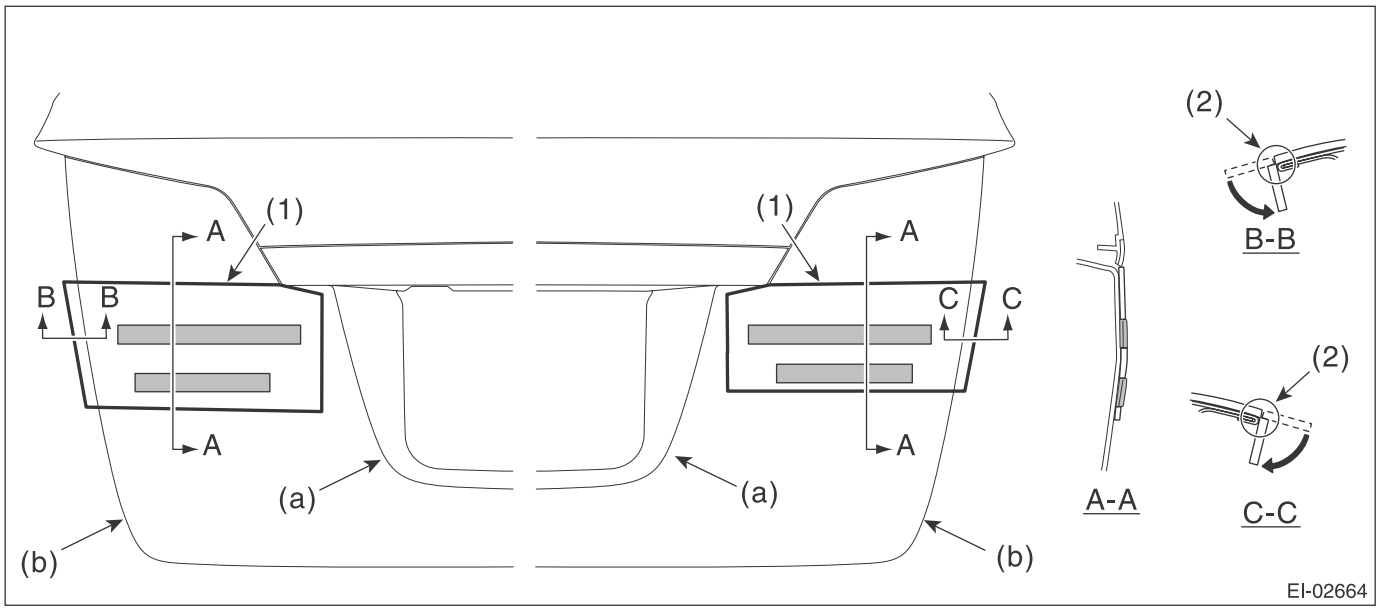

(a) Character line

(b) End of rear gate panel

(1) Align the top end of application tape to the rear finisher light.

(2) Align the slit of application tape to the end of rear ate panel and break off the application tape.

EXTERIOR BODY PANELS

EB

Page

1. General Description 2
2. Front Hood 9
3. Front Fender 16
4. Front Door 24
5. Front Sealing Cover 30
6. Rear Door 32
7. Rear Sealing Cover 37
8. Door Sash Tape 39
9. Trunk Lid 43
10. Rear Gate 48
11. Protector Tape 55

1. General Description

A: SPECIFICATION

Refer to Body Repair Manual for the dimensions of the body.

B: COMPONENT

1. FRONT HOOD

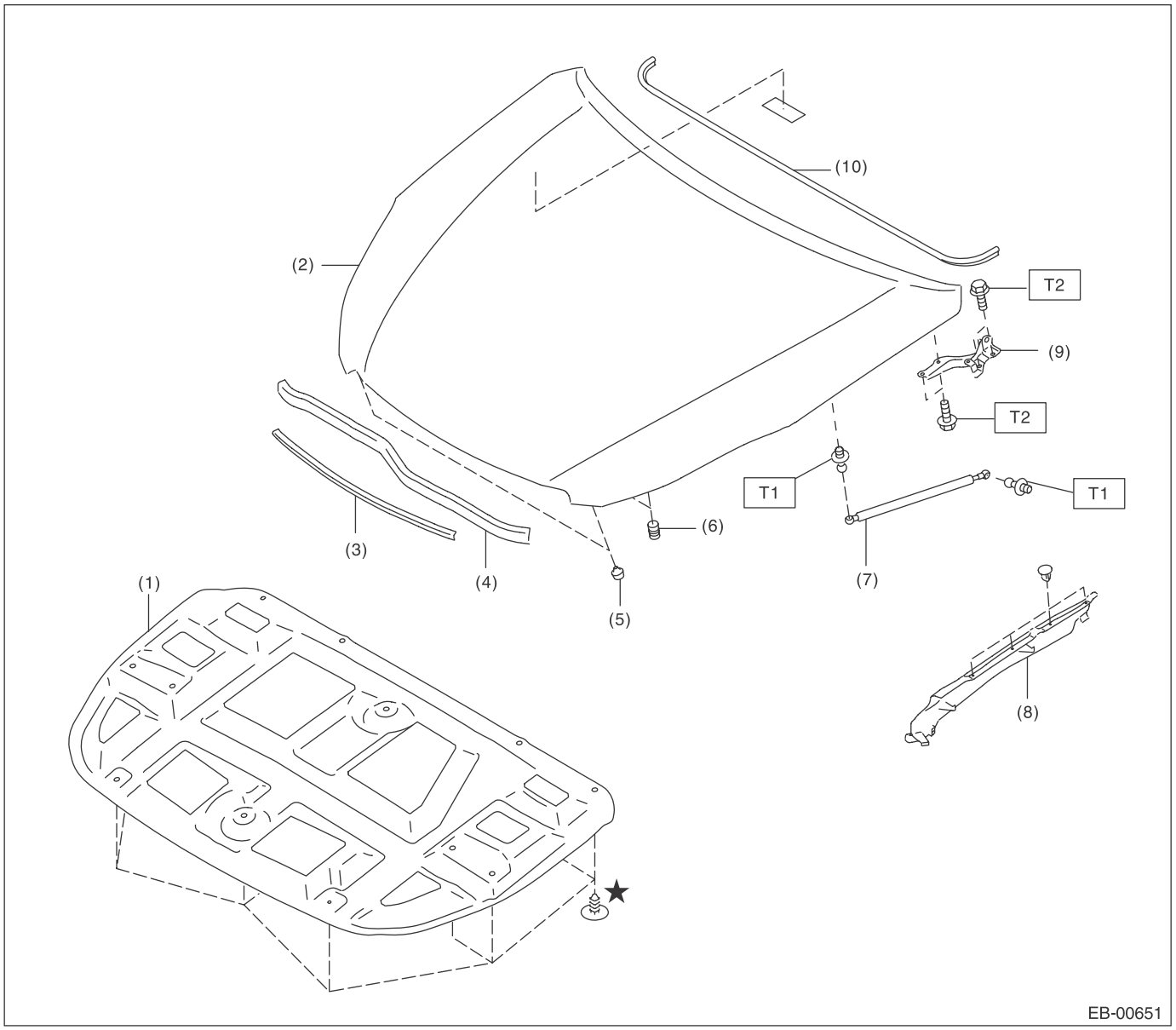

(1)	Insulator	(6)	Buffer (hood side)
(2)	Front hood panel ASSY	(7)	Damper stay ASSY
(3)	Front grille seal ASSY	(8)	Fender cover ASSY UPR
(4)	Front hood seal ASSY	(9)	Hinge
(5)	Front hood stopper	(10)	Cowl panel seal

Tightening torque:N·m (kgf-m, ft-lb)
T1: 20 (2.04, 14.8)
T2: 25 (2.55, 18.4)

2. FRONT FENDER

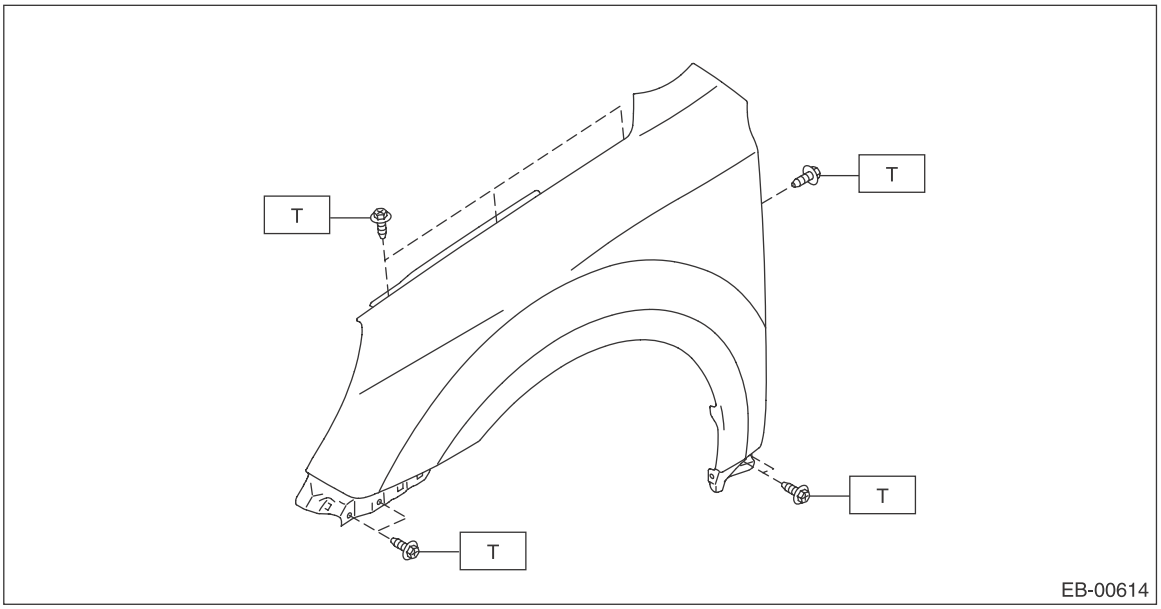

Tightening torque:N·m (kgf-m, ft-lb)
T: 7.5 (0.76, 5.5)

3. FRONT DOOR

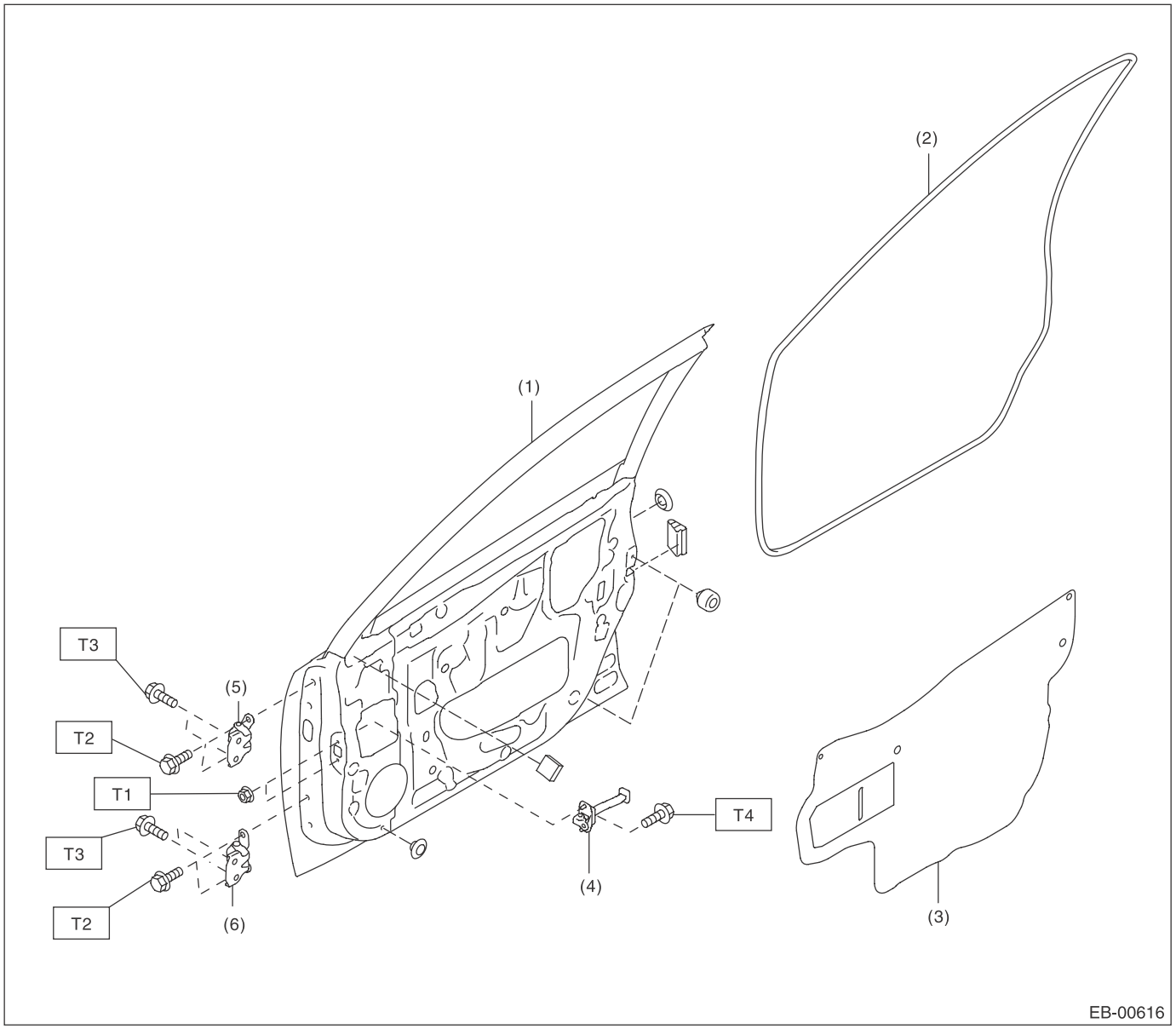

(1)	Front door panel	(6)	Lower hinge
(2)	Front door weather strip		
(3)	Sealing cover		
(4)	Checker		
(5)	Upper hinge		

Tightening torque:N·m (kgf-m, ft-lb)
T1: 7.5 (0.76, 5.5)
T2: 25 (2.55, 18.4)
T3: 30 (3.06, 22.1)
T4: 33 (3.36, 24.3)

4. REAR DOOR

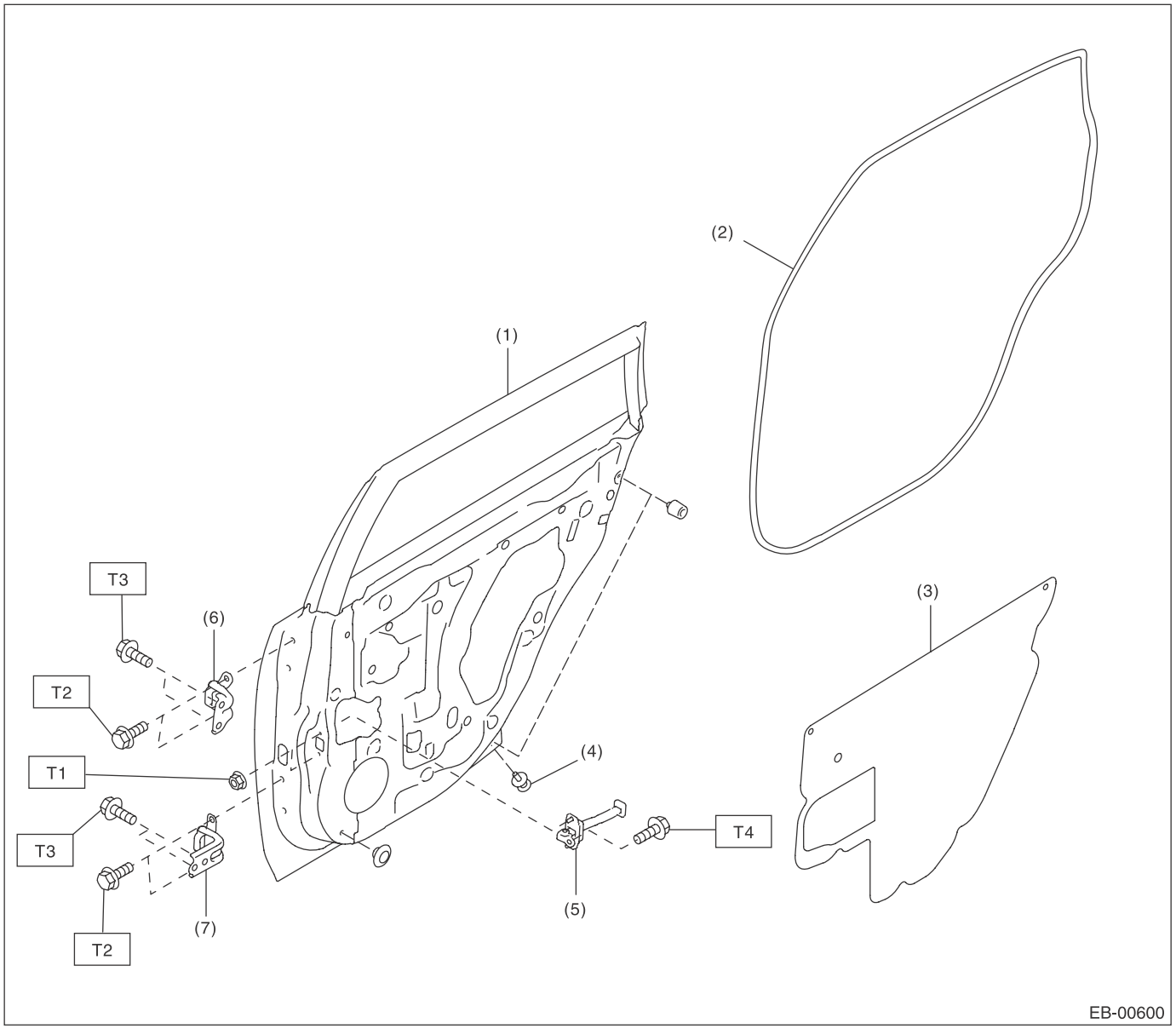

(1)	Rear door panel	(6)	Upper hinge
(2)	Rear door weather strip	(7)	Lower hinge
(3)	Sealing cover		
(4)	Rear door catcher		
(5)	Checker		

Tightening torque:N·m (kgf-m, ft-lb)
T1: 7.5 (0.76, 5.5)
T2: 25 (2.55, 18.4)
T3: 30 (3.06, 22.1)
T4: 33 (3.36, 24.3)

5. TRUNK LID PANEL

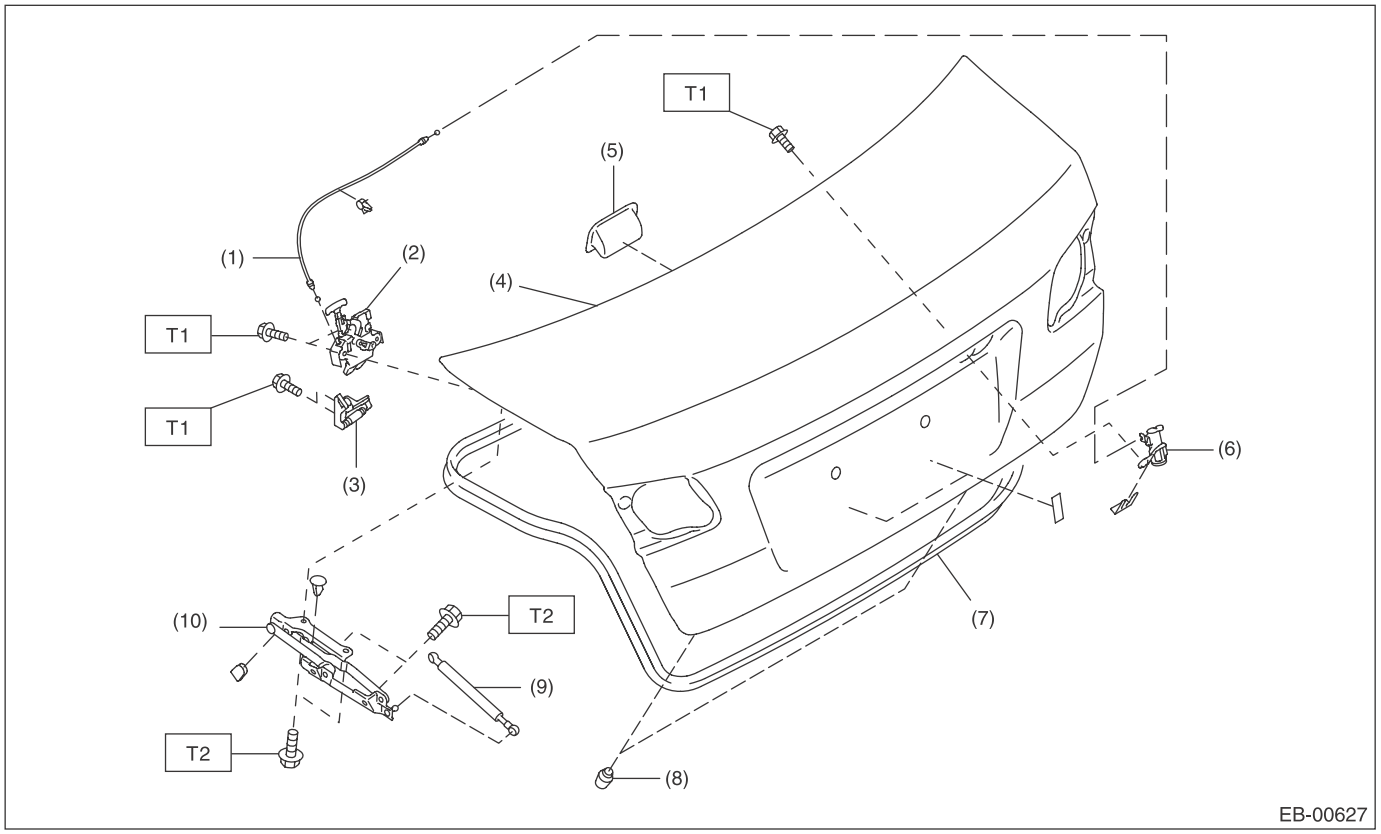

(1)	Trunk release cable ASSY	(6)	Trunk lid key cylinder ASSY
(2)	Trunk lid latch & actuator ASSY	(7)	Weather strip
(3)	Striker	(8)	Trunk lid stopper
(4)	Trunk lid panel ASSY	(9)	Trunk lid damper stay
(5)	Trunk lid inner handle	(10)	Trunk lid hinge ASSY

Tightening torque:N·m (kgf-m, ft-lb)
T1: 7.5 (0.76, 5.5)
T2: 25 (2.55, 18.4)

6. REAR GATE

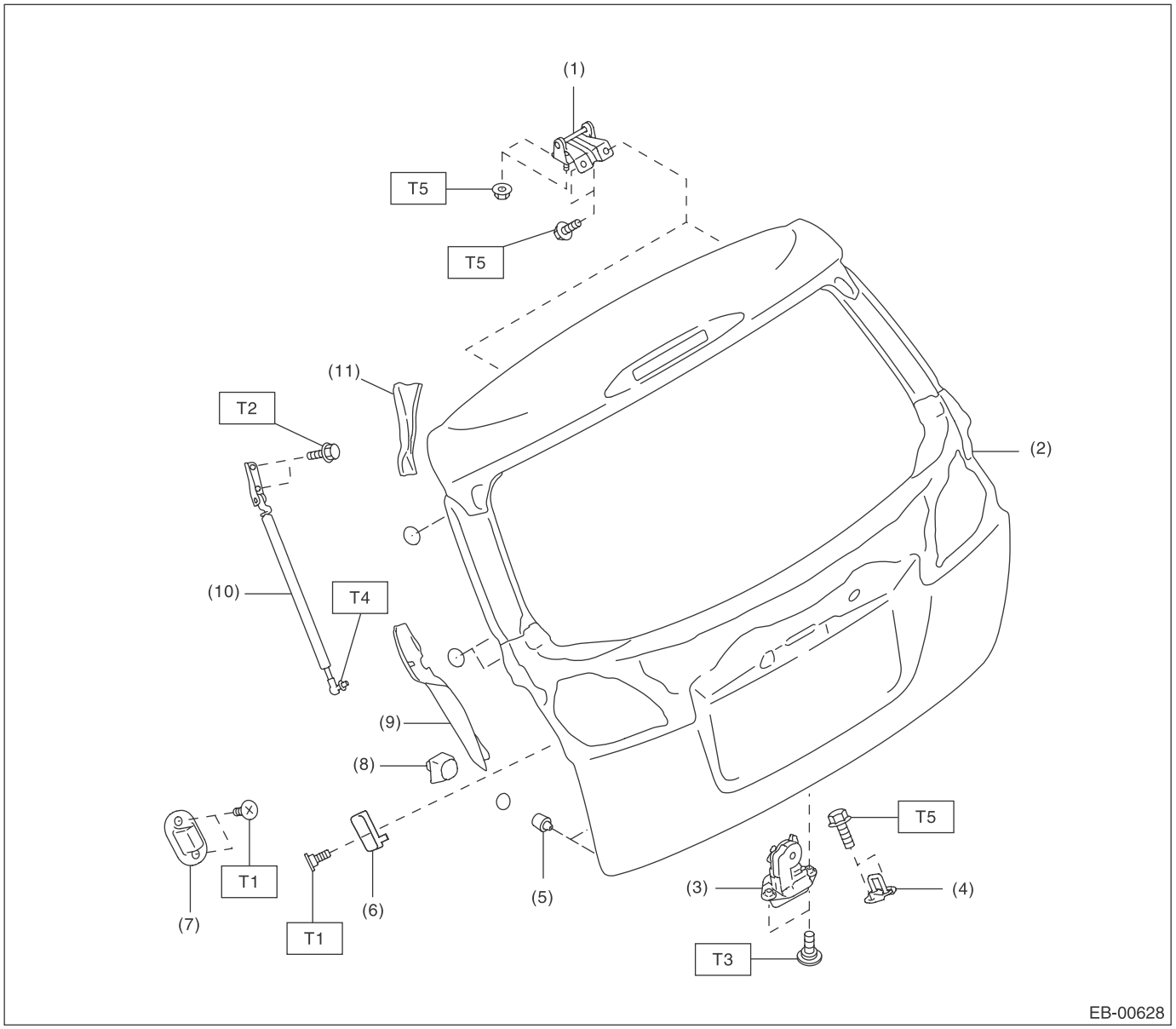

(1)	Hinge	(7)	Buffer (body side)	***Tightening torque:N·m (kgf-m, ft-lb)***
(2)	Rear gate panel	(8)	Rear gate spacer (mounted to the body)	***T1: 7.5 (0.76, 5.5)***
(3)	Rear gate latch & actuator ASSY	(9)	Rear gate cover	***T2: 16 (1.63, 11.8)***
(4)	Striker	(10)	Rear gate damper stay	***T3: 18 (1.84, 13.3)***
(5)	Stopper rubber	(11)	Rear gate drip rubber	***T4: 20 (2.04, 14.8)***
(6)	Buffer (rear gate side)			***T5: 25 (2.55, 18.4)***

C: CAUTION

Exterior body panels are heavy. When removing and installing them, do not drop and damage the panels. Also, be careful not to scratch the coated surfaces of the panels.

D: PREPARATION TOOL

1. SPECIAL TOOL

ILLUSTRATION	TOOL NUMBER	DESCRIPTION	REMARKS
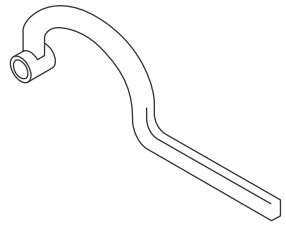 ST-925610000	925610000	WRENCH	Used for removing and installing door hinge.

2. GENERAL TOOL

TOOL NAME	REMARKS
Support jack	Used for supporting door panel.
Clip remover	Used for removing various types of clips

2. Front Hood

A: REMOVAL

1. FRONT HOOD INSULATOR

Release the clips to remove the front hood insulator.

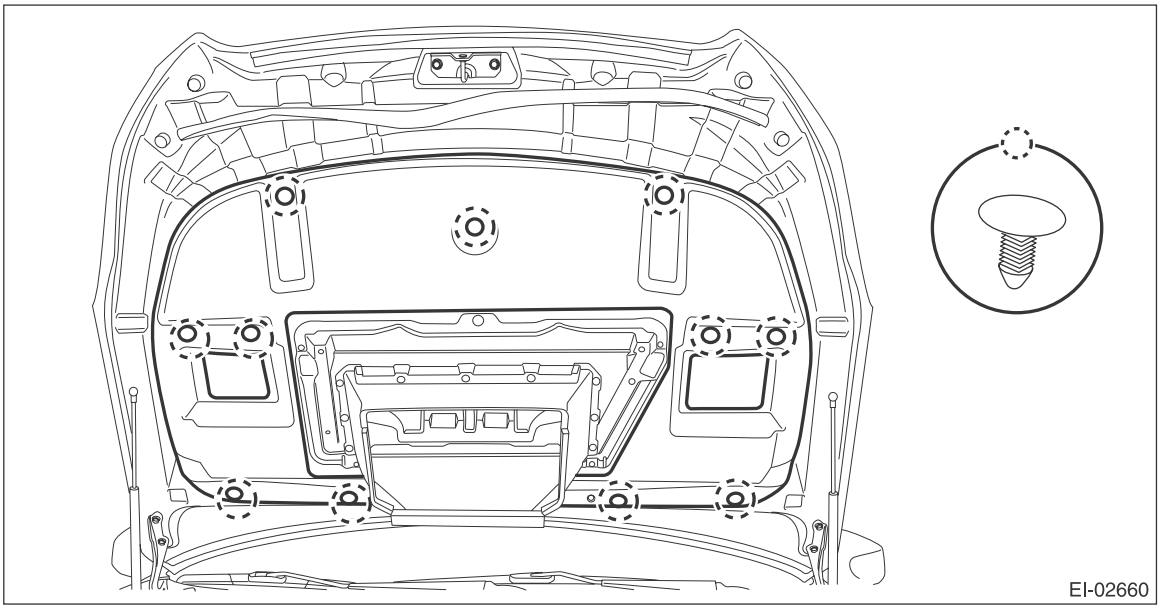

2. FRONT HOOD SEAL

Remove the clip, and remove the seal.

CAUTION:
If the weather strip clip is removed with excessive force, the seal may be damaged. Be sure to use clip remover, etc. to remove.

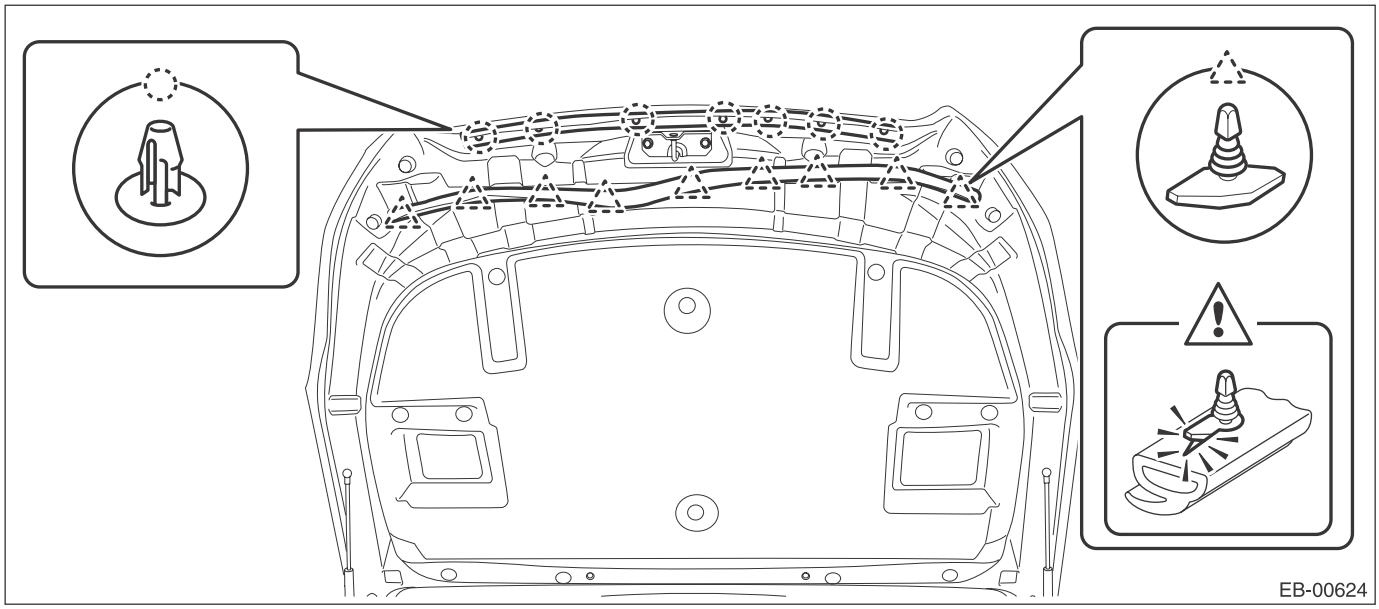

3. FRONT HOOD DAMPER

CAUTION:
- **Do not damage piston rods and oil seals.**
- **Never disassemble cylinders: They contain gas.**
- **Front hood panels are heavy. When removing and installing the damper stays and hood hinges, always work in a team of two or more persons.**

Remove the damper stay by removing mounting bolts.

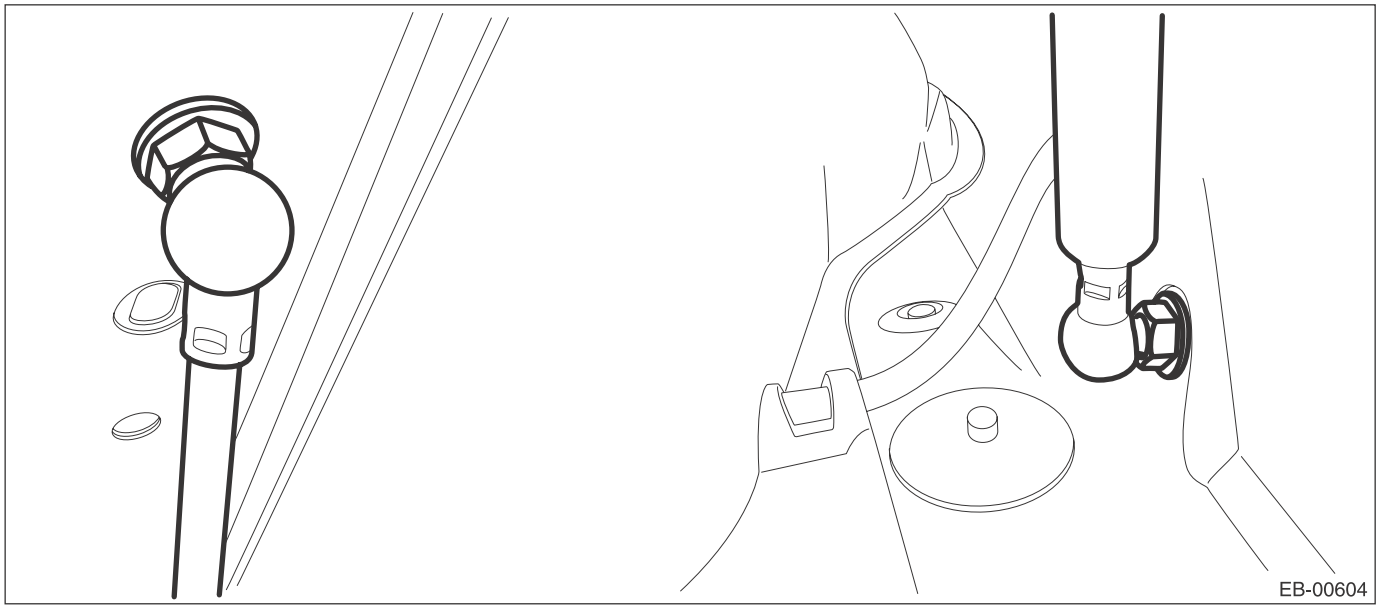

4. FRONT HOOD HINGE

CAUTION:
Front hood panels are heavy. When removing and installing the damper stays and hood hinges, always work in a team of two or more persons.

1) Remove the fender cover assembly UPR.
   (1) Remove the clip.
   (2) Release the claws of the fender cover assembly UPR by pulling it forward and remove the fender cover.

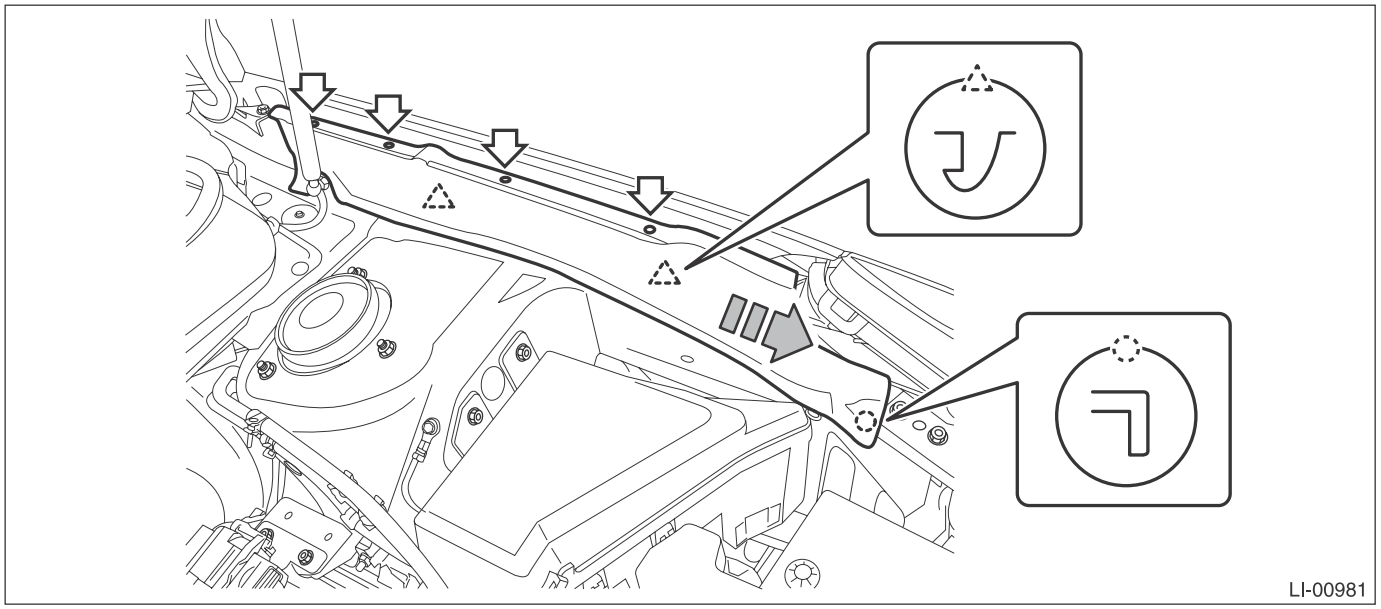

2) Remove the cowl panel side.
   (1) Detach the pins of the cowl panel side.

(2) Remove the cowl panel side from inside the fender panel by pulling it.

CAUTION:
Applying excessive pulling force may damage the cowl panel side. If it is difficult to remove, use a plastic remover or equivalent tool.

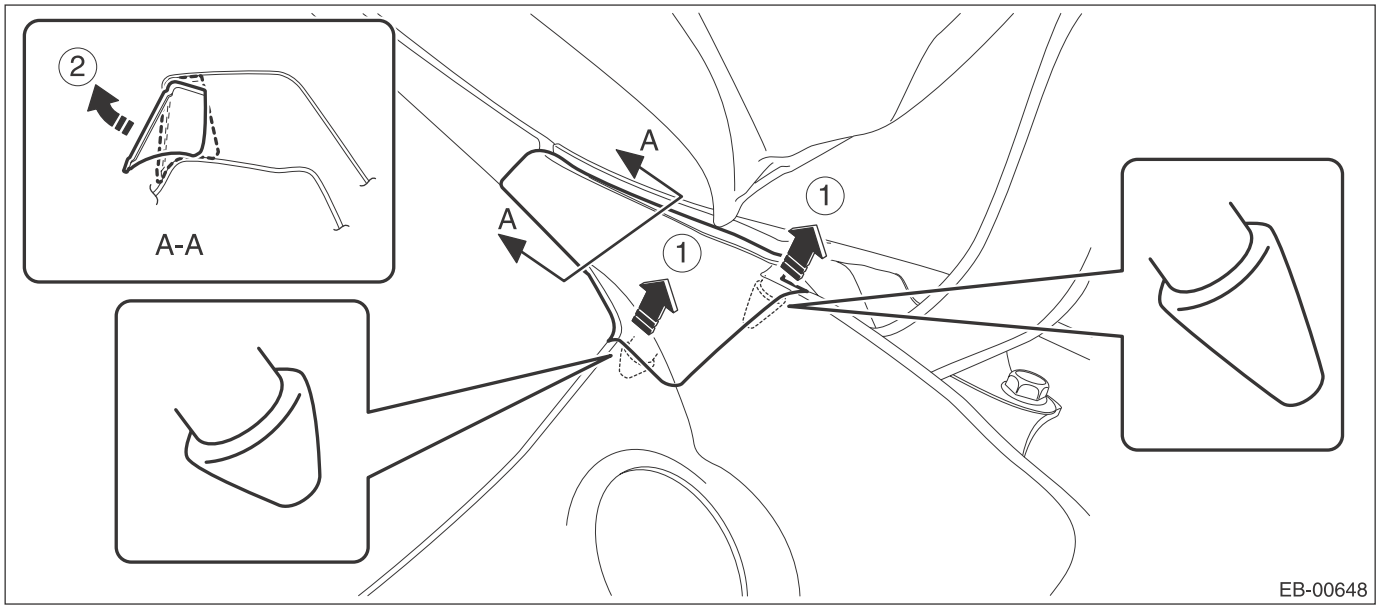

3) Remove the front fender panel. <Ref. to EB-16, REMOVAL, Front Fender.>
4) Remove the front hood panel.
(1) Remove the damper stay mounting bolt on the hood panel side.
(2) Remove the bolts on the hood panel, and remove the front hood panel.

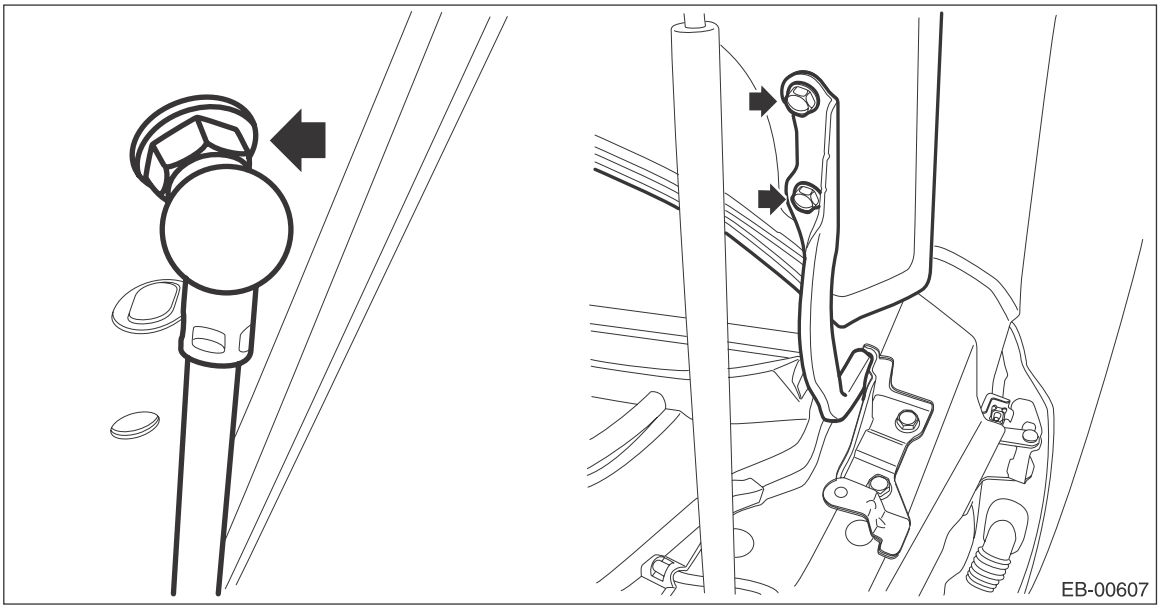

5) Remove the bolts, and remove the front hood hinge.

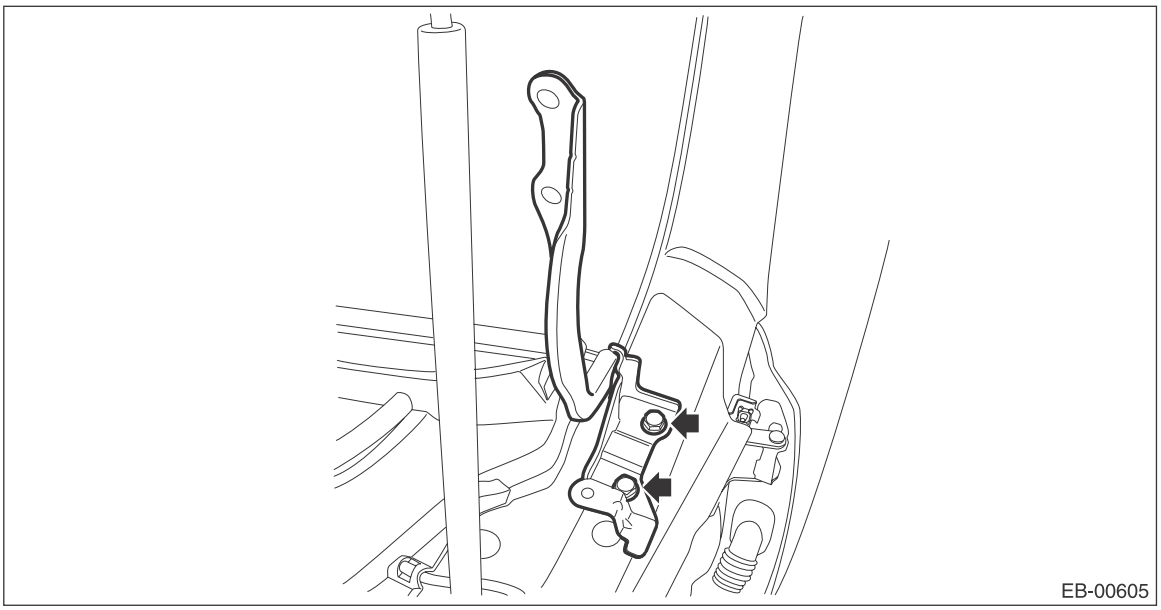

5. FRONT HOOD PANEL

CAUTION:
Front hood panels are heavy. When removing and installing the damper stays and hood hinges, always work in a team of two or more persons.

1) Remove the damper stay mounting bolt on the hood panel side.
2) Remove the bolts on the hood panel, and remove the front hood panel.

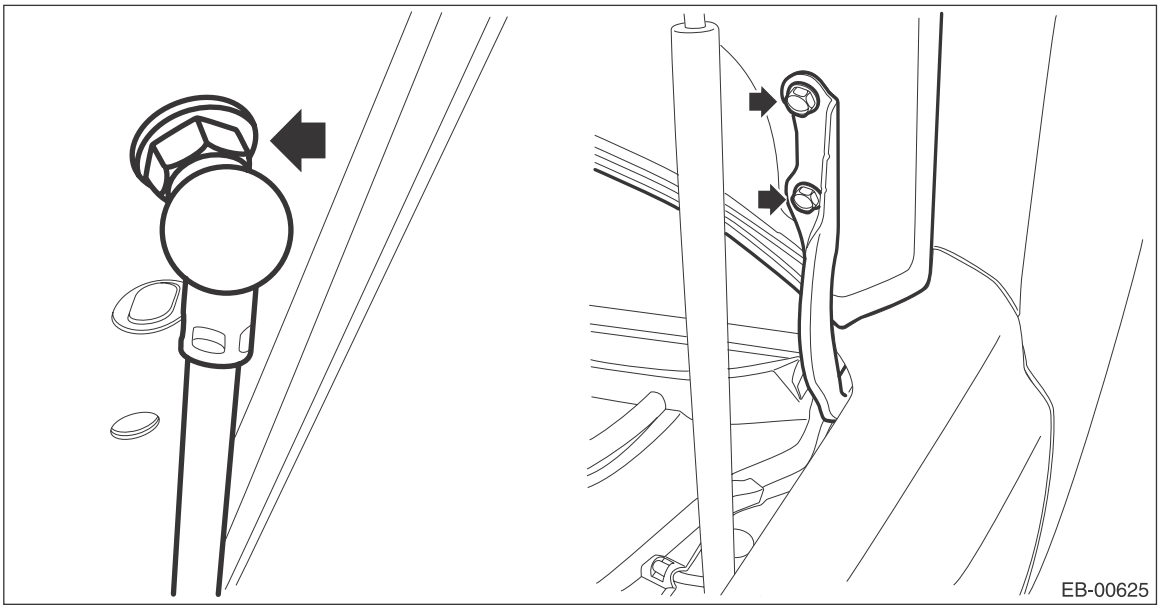

B: INSTALLATION

CAUTION:
Front hood panels are heavy. When removing and installing the damper stays and hood hinges, always work in a team of two or more persons.
To install the front hood insulator, front hood seal, and front hood damper, follow the reverse order of removal.
To install the front hood hinges and front hood panel, follow the procedure below.
1) Install the front hood hinges to the vehicle body. (When front hood hinges are removed)
2) Temporarily install the front hood panel to the front hood hinges.

NOTE:
When installing the front hood panel, make sure that a uniform clearance is created around the panel.
3) Adjust the clearance around the front hood panel. <Ref. to EB-13, ADJUSTMENT, Front Hood.>
4) Tighten the front hood hinge bolts.

Tightening torque:
37 N·m (3.77 kgf-m, 27.3 ft-lb)
5) Install each part of the front hood in the reverse order of removal.

Tightening torque:
Front hood damper: 20 N·m (2.04 kgf-m, 14.8 ft-lb)
Front hood duct: 4.5 N·m (0.46 kgf-m, 3.3 ft-lb)

C: ADJUSTMENT

Adjust the clearance around the front hood panel as follows.

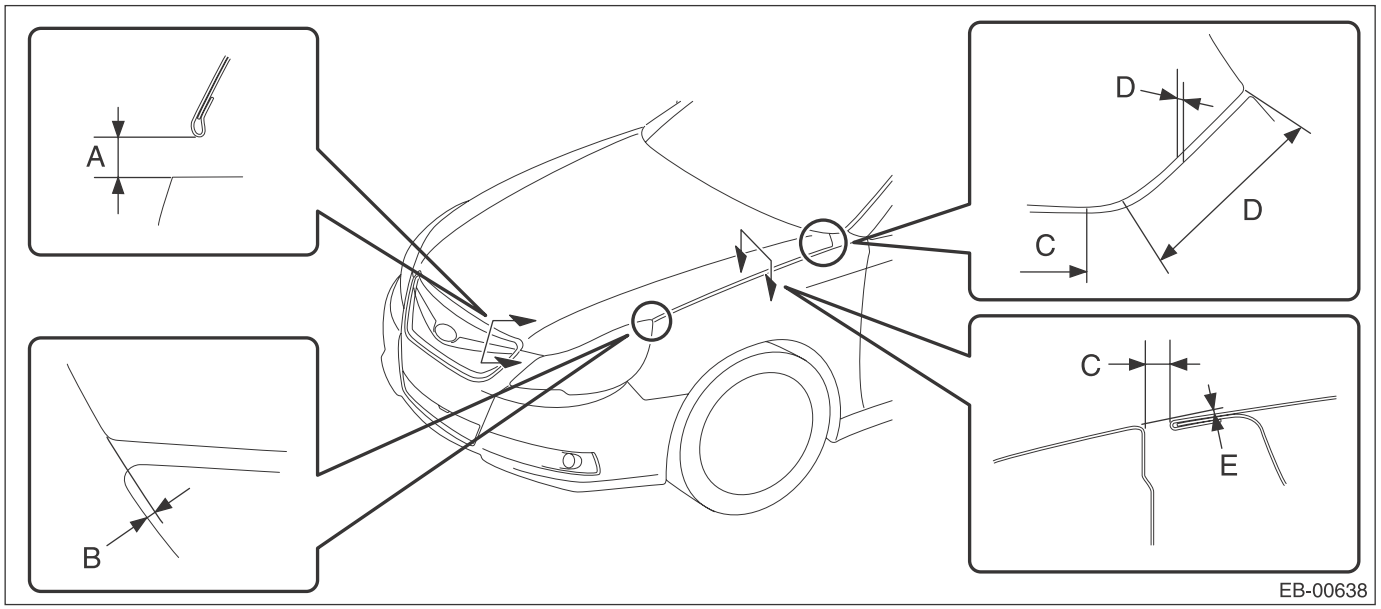

	Part	Standard
A	Front hood panel to front bumper	6.0±1.0 mm (0.24±0.04 in)
B	Offset value between front hood panel and front fender panel tip	0+0.5, –1.0 mm (0+0.02, –0.04 in)
C	Front hood panel to Front fender panel (from front end to just before curved portion)	3.5±1.0 mm (0.14±0.04 in)
D	Front hood panel to Front fender panel (from rear end to just before curved portion)	4.1±1.0 mm (0.16±0.04 in)
E	Surface level gap between front hood panel and front fender panel	0.5+0.5, –1.0 mm (0.02+0.02, –0.04 in)

1) Adjust the horizontal position of front hood.

(1) Loosen the left and right hinge attaching bolts.

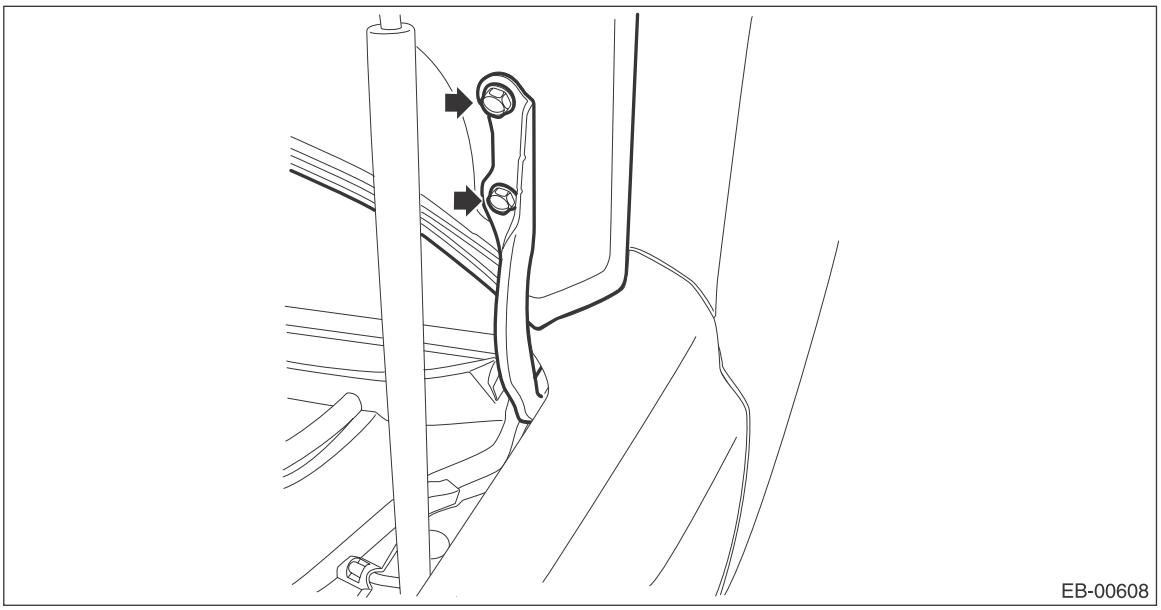

(2) Adjust the horizontal panel gap of the front hood and tighten the hinge attaching bolts.

Tightening torque:
37 N·m (3.77 kgf-m, 27.3 ft-lb)

2) Adjust the height at the front end of hood.
(1) Loosen the bolts of the front hood lock assembly.
(2) Adjust the front hood lock assembly by moving it up and down.

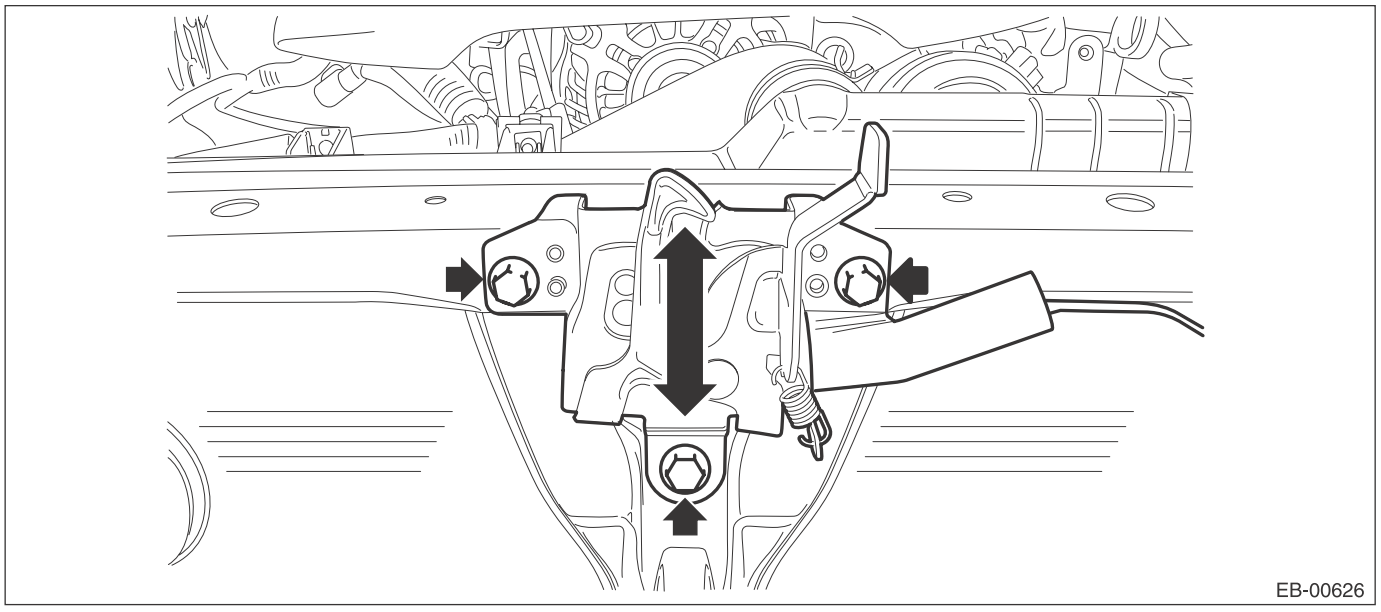

Tightening torque:
33 N·m (3.36 kgf-m, 24.3 ft-lb)

3) Rotate the hood buffer to adjust lateral height.

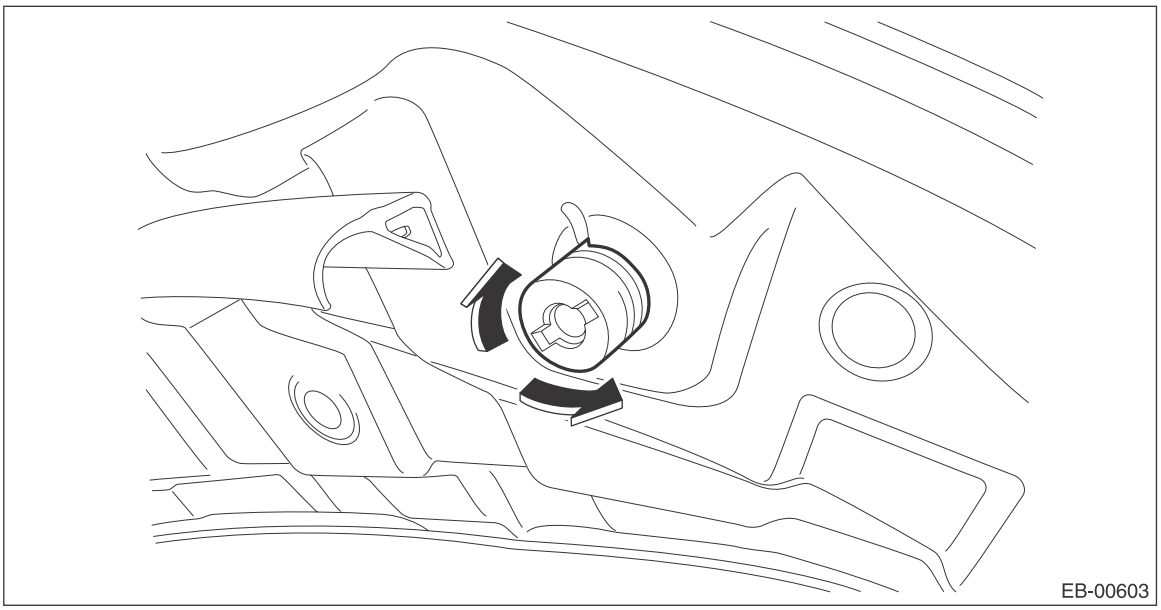

D: DISPOSAL

For how to dispose of the front hood damper stay, refer to the disposal procedure for rear gate damper stay. <Ref. to EB-53, REAR GATE DAMPER STAY, DISPOSAL, Rear Gate.>

3. Front Fender

A: REMOVAL

1) Disconnect the ground cable from battery.
2) Remove the bumper face assembly.
   (1) Remove the clips, turn over the front mud guard, and disconnect the fog light connector. (Model with fog light)

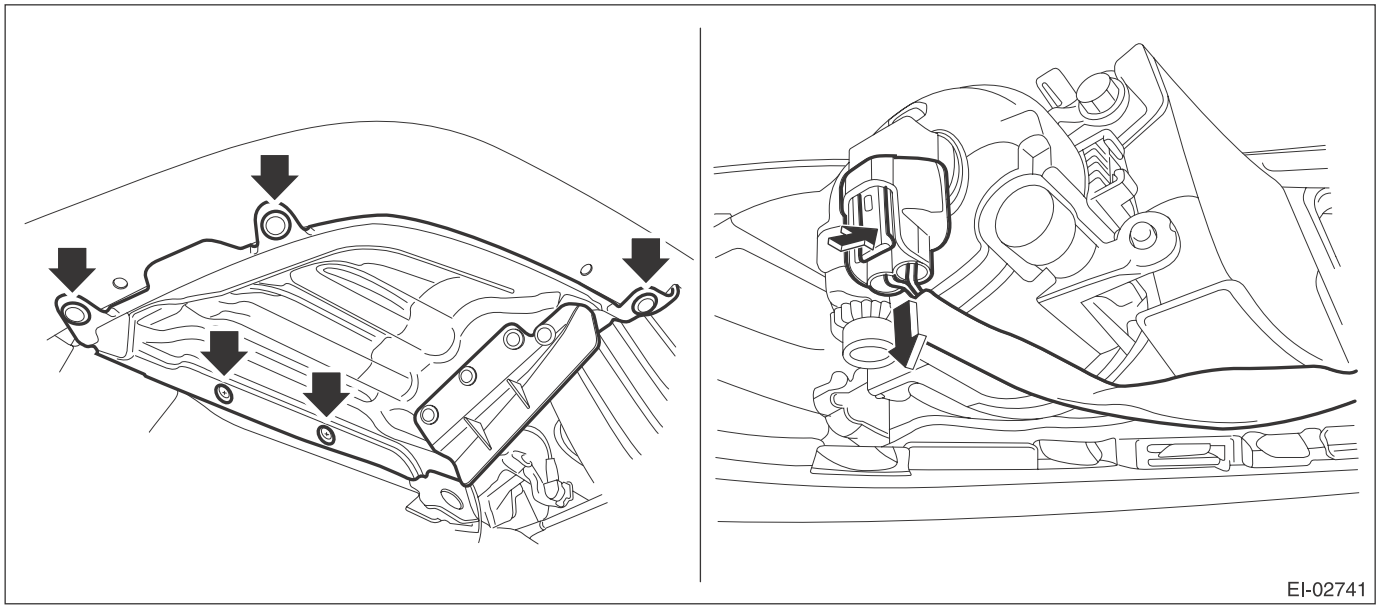

   (2) Remove the clips at the upper side of the bumper.
   (3) Remove the clips from the fender.

(4) Remove the clips at the lower side of bumper.

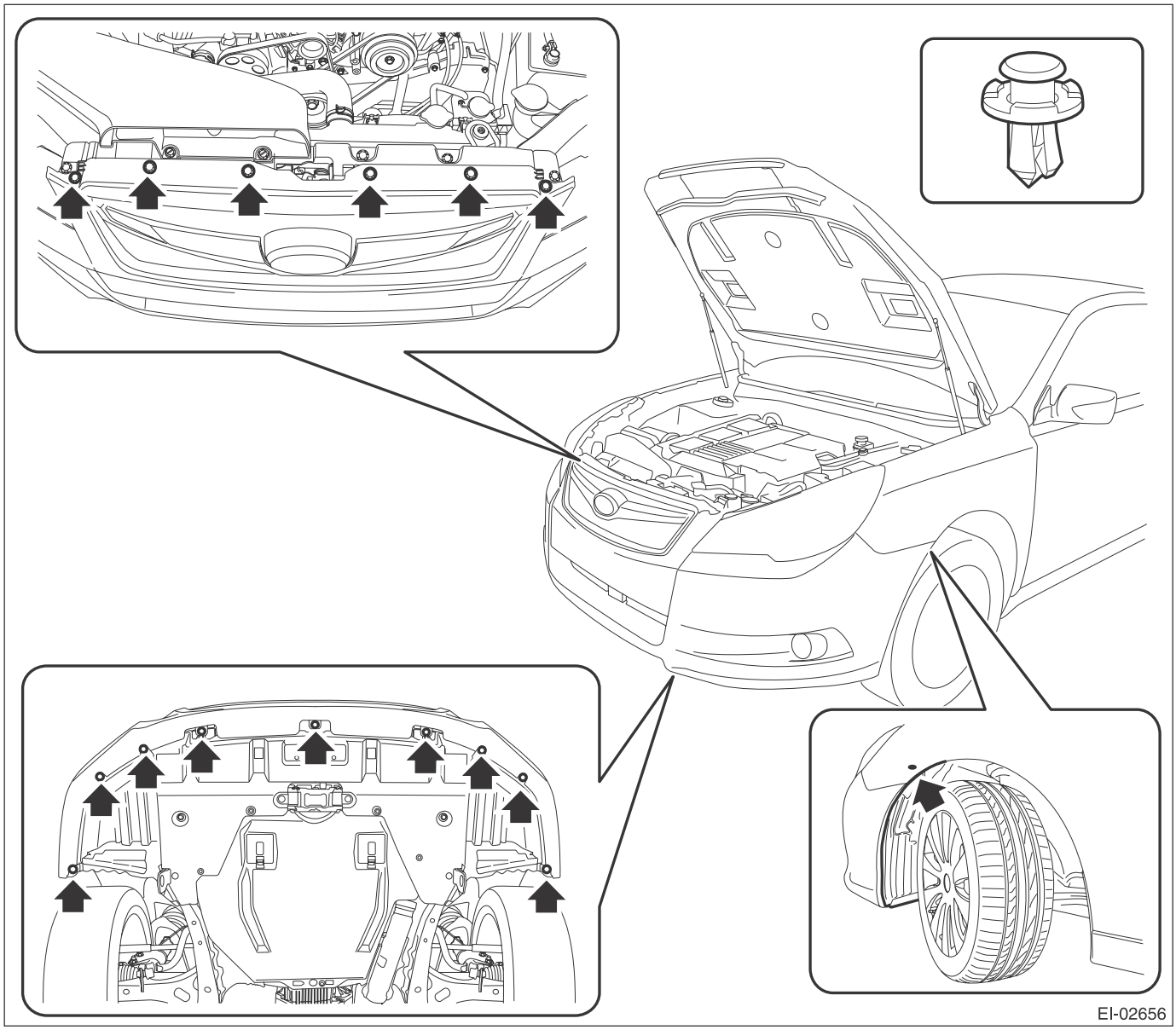

(5) Detach the flange section on the bumper face side from the bracket side front UPR.

CAUTION:
Do not pull forcibly. It may damage the flange sections of the bumper face.

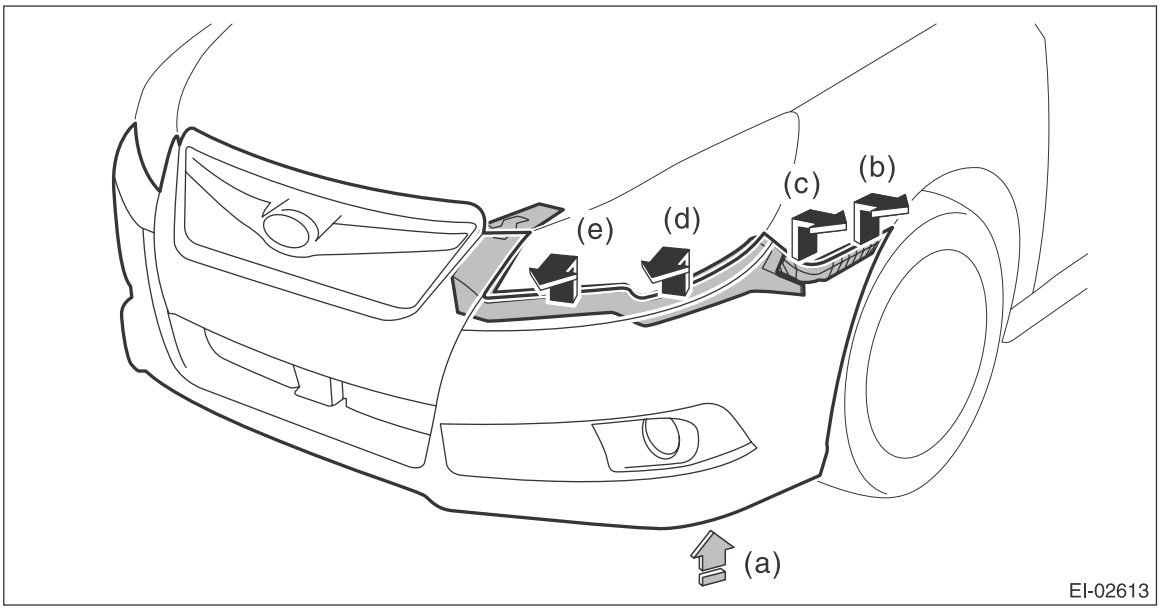

NOTE:
Detach the parts in order from (b) to (e) while pulling up the lower side of the fog light (a).
Detach the opposite side in the same manner.

3) Remove the cowl panel side.
(1) Detach the pins of the cowl panel side.
(2) Remove the cowl panel side from inside the fender panel by pulling it.

CAUTION:
Applying excessive pulling force may damage the cowl panel side. If it is difficult to remove, use a plastic remover or equivalent tool.

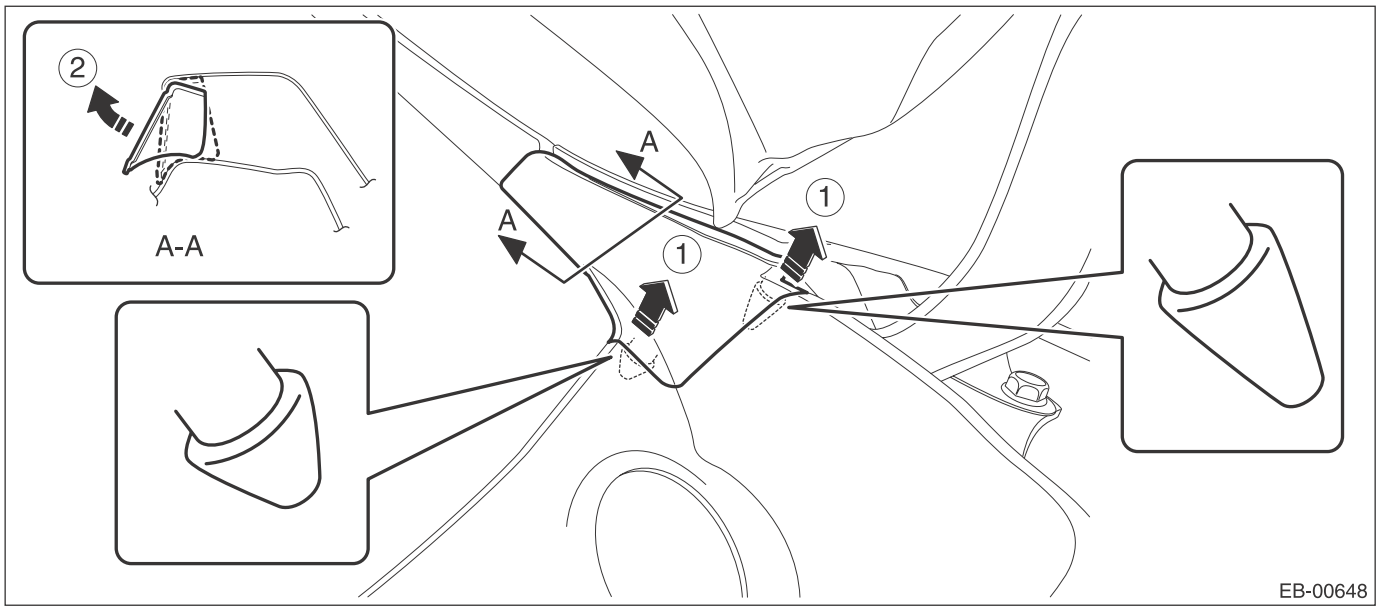

4) Remove the headlight assembly.
(1) Remove the fender cover assembly UPR.
a) Remove the clip.

b) Release the claws of the fender cover assembly UPR by pulling it forward and remove the fender cover.

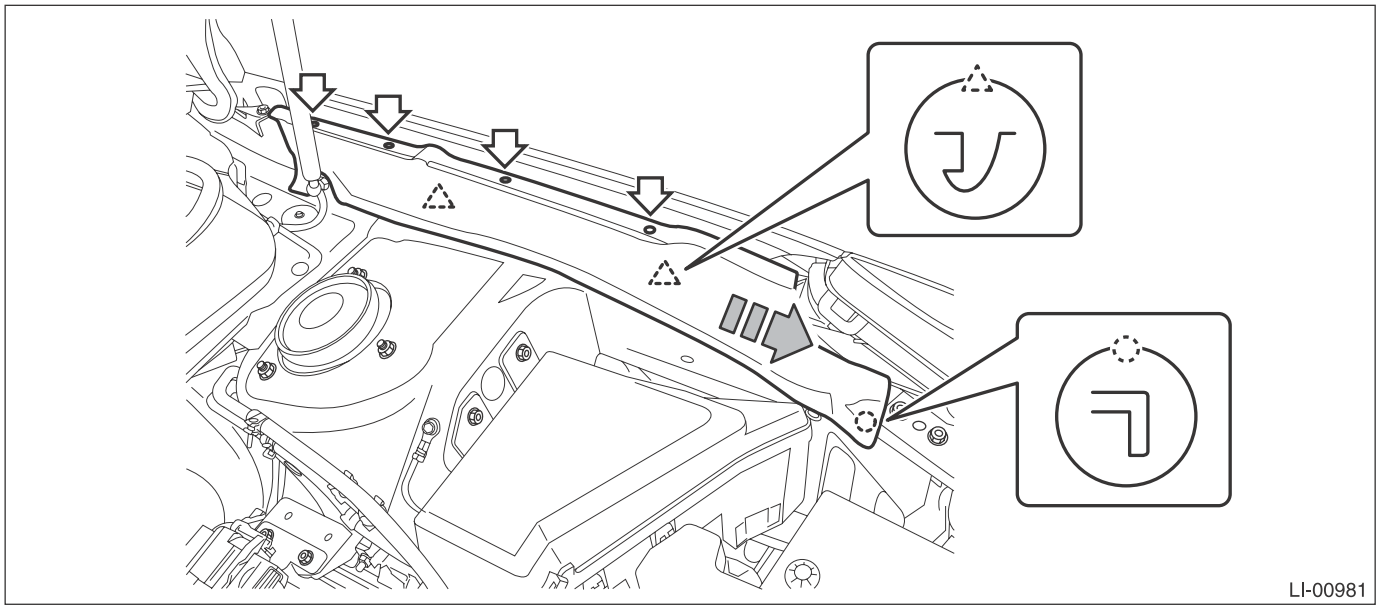

(2) Remove the headlight assembly.

NOTE:
When removing the RH headlight, remove the air intake duct.

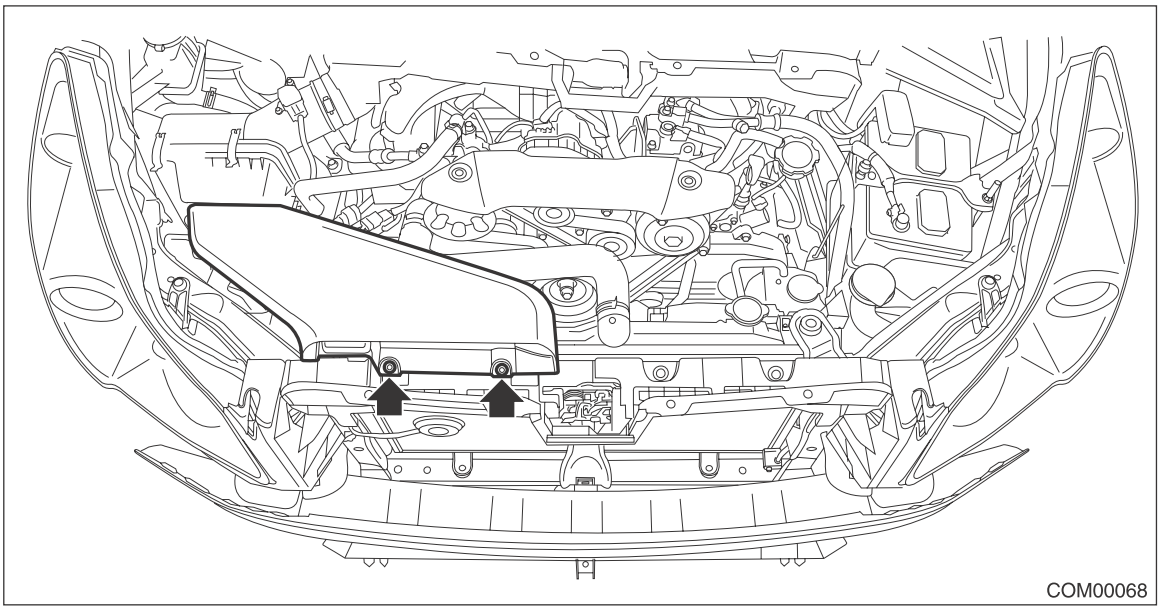

a) Remove the bolts and two clips, and pull out the headlight assembly to the front of the vehicle.

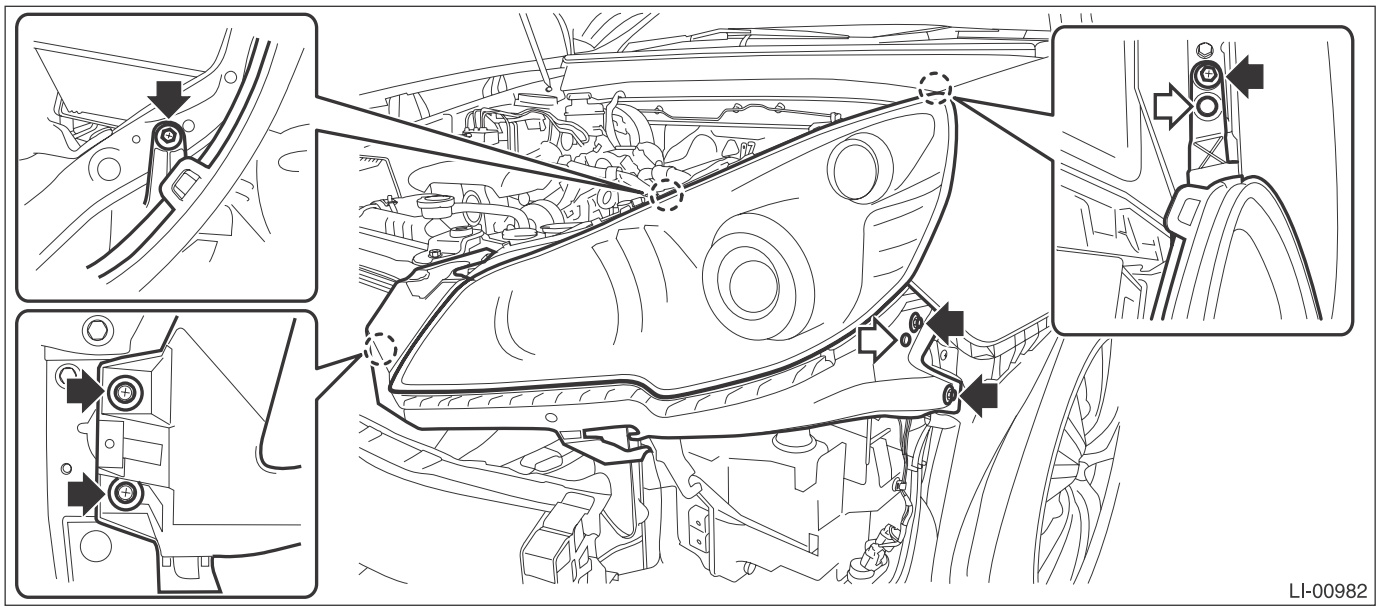

b) Disconnect the connector and remove the headlight assembly.

- Headlight connector RH

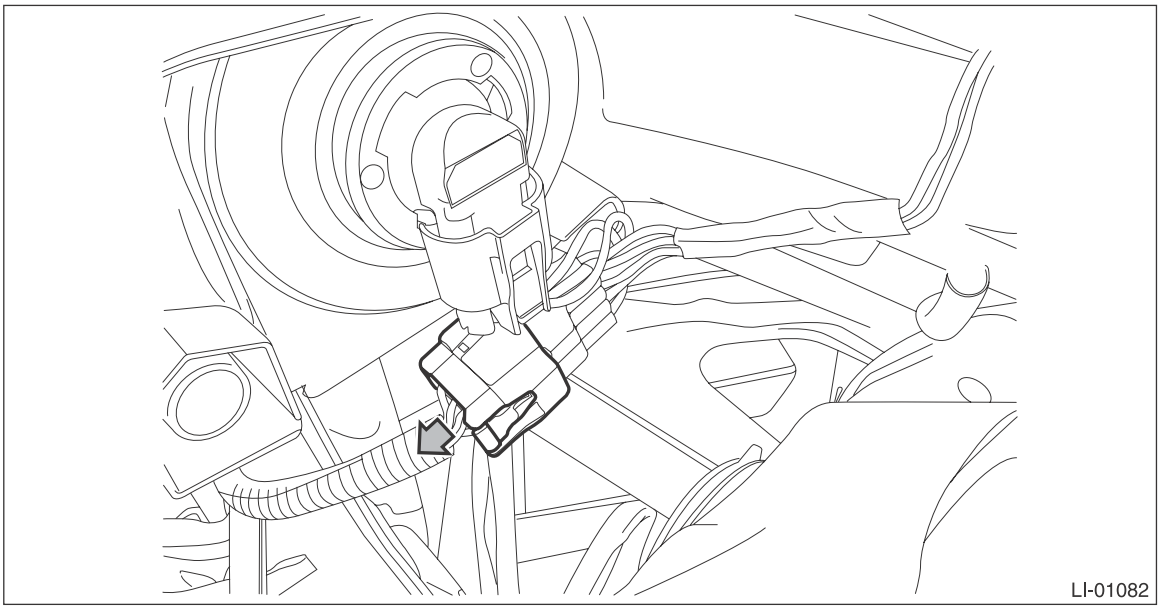

- Headlight connector LH

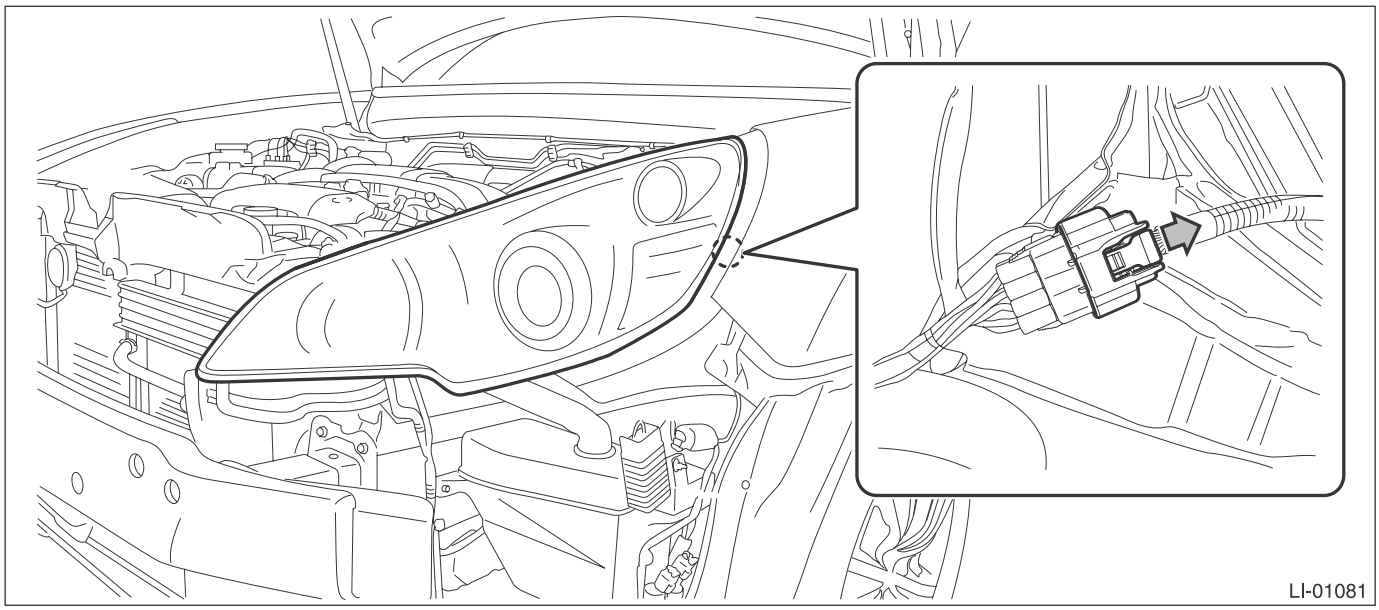

5) Remove the clips, and then remove the side sill garnish.

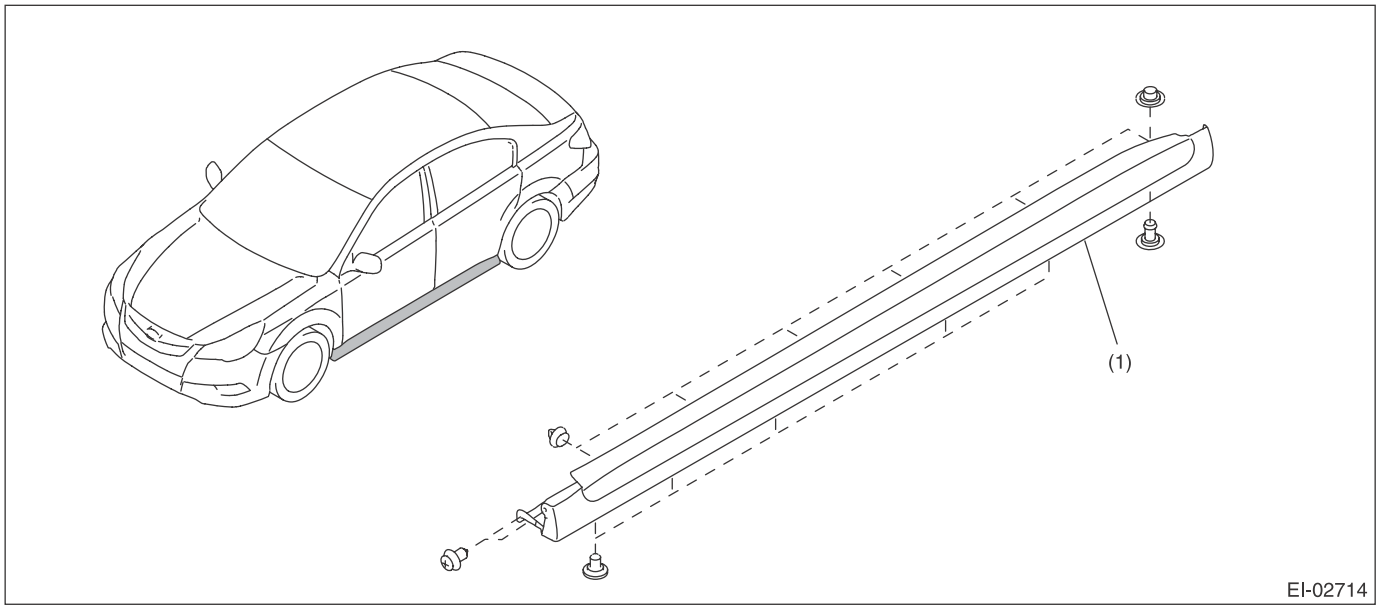

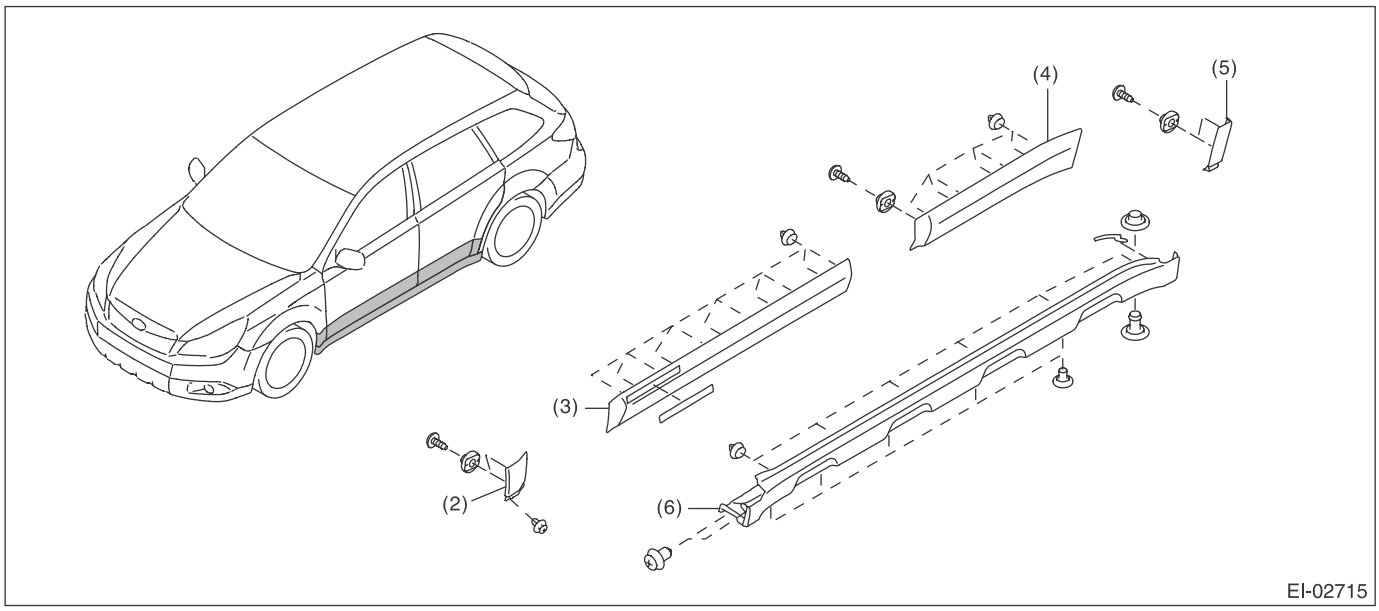

(1) Side sill garnish ASSY (Sedan model)
(2) Garnish ASSY front fender (OUTBACK model)
(3) Garnish ASSY front door (OUTBACK model)
(4) Garnish ASSY rear door (OUTBACK model)
(5) Garnish ASSY rear quarter (OUTBACK model)
(6) Side sill garnish ASSY (OUTBACK model)

6) Remove the front fender panel.
(1) Remove the mud guard clips.

(2) Remove the bolt, and remove the front fender panel.

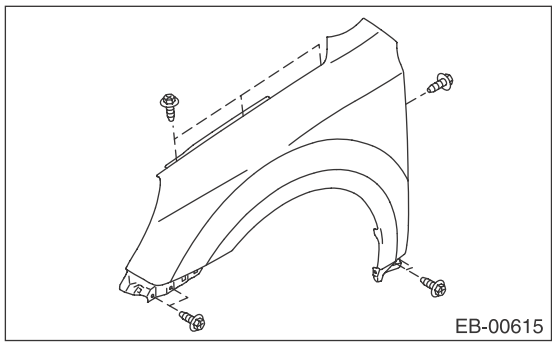

B: INSTALLATION

Install each part in the reverse order of removal.

CAUTION:

- **After installing the front fender panel, be sure to perform headlight beam adjustment.**
- **Install the bumper face so that the under cover front end (b) comes inside the front bumper face (a).**

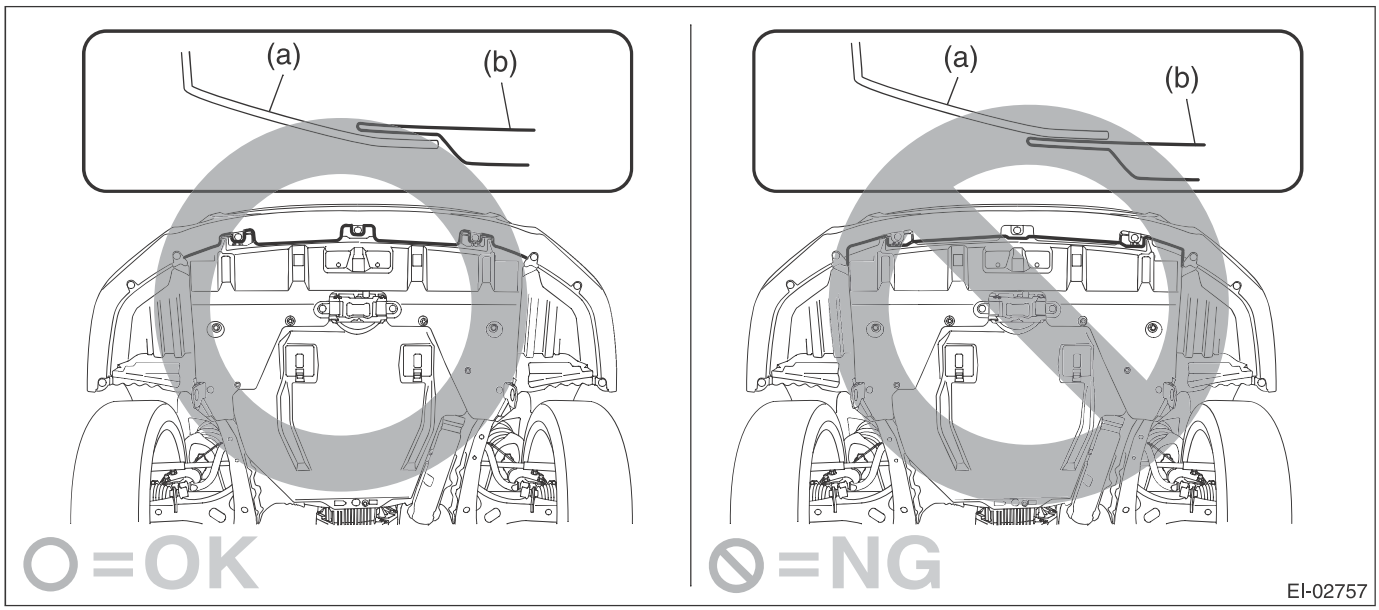

Tightening torque:

Front fender panel: 7.5 N·m (0.76 kgf-m, 5.5 ft-lb)

Headlight ASSY: 7.5 N·m (0.76 kgf-m, 5.5 ft-lb)

NOTE:

When installing, make sure that a uniform clearance is created around the front fender panel.

- Front fender panel — Front hood panel:<Ref. to EB-13, ADJUSTMENT, Front Hood.>
- Front fender panel — Front door panel:<Ref. to EB-28, ADJUSTMENT, Front Door.>

4. Front Door

A: REMOVAL

1) Disconnect the ground cable from battery.
2) Remove the front door trim. <Ref. to EI-60, FRONT DOOR, REMOVAL, Door Trim.>
3) Remove the outer mirror assembly. <Ref. to GW-25, REMOVAL, Outer Mirror Assembly.>
4) Remove the front door speaker assembly.
   (1) Remove the screws.
   (2) Disconnect the harness connector and remove the front speaker assembly.

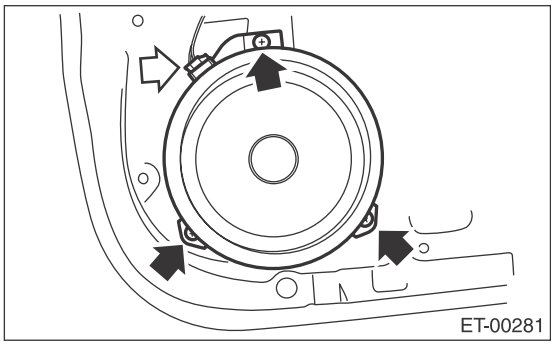
ET-00281

5) Remove the front sealing cover.

CAUTION:
- **Carefully remove the butyl tape. Excessive force will easily break the cover.**
- **If the sealing cover gets broken, replace it with a new part.**

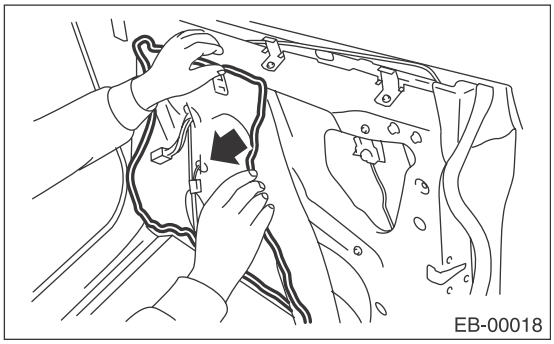
EB-00018

6) Remove the door sash and front door glass. <Ref. to GW-16, REMOVAL, Front Door Glass.>
7) Remove the front door regulator and motor. <Ref. to GW-18, REMOVAL, Front Regulator and Motor Assembly.>
8) Remove the front door latch assembly. <Ref. to SL-35, REMOVAL, Front Door Latch and Door Lock Actuator Assembly.>
9) Remove the front outer handle. <Ref. to SL-32, REMOVAL, Front Outer Handle.>
10) Remove the front door weather strip.

CAUTION:
If the weather strip clip is removed with excessive force, the weather strip may be damaged. Be sure to use clip remover to remove.

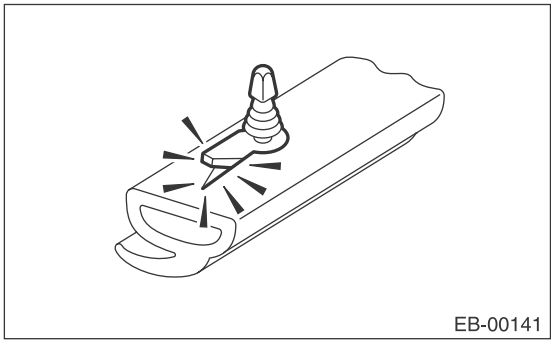
EB-00141

11) Remove the bolts and nuts to remove the door checker.

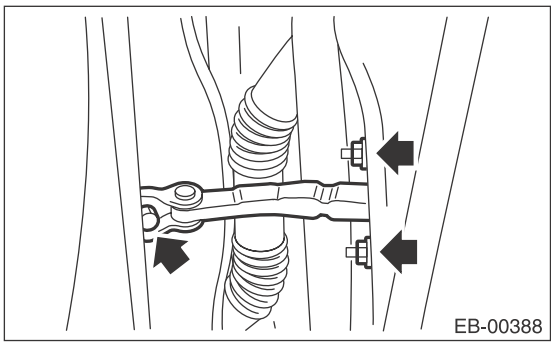

12) Release the claws, and then remove the side sill cover-front INN.

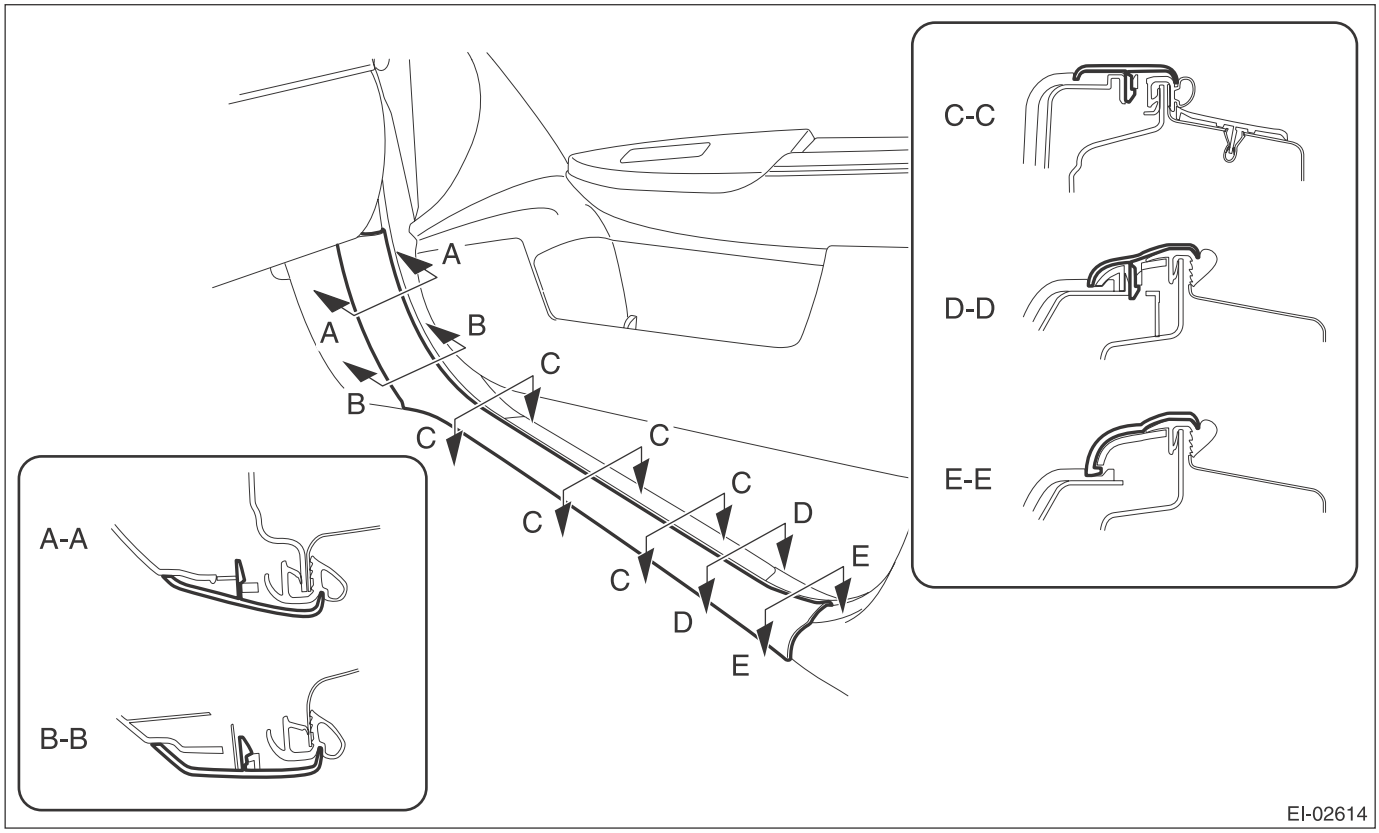

CAUTION:
Do not pull with excessive force. Doing so may damage the claws of the side sill cover INN.

NOTE:
To release the claws of the side sill cover INN, the following steps are recommended.
1. Take out the weather strip from under the side sill cover INN.
2. Turn over the floor mat and release the claw (C) by accessing from behind the side sill cover INN.

13) Remove the clip, and remove the side sill cover front.

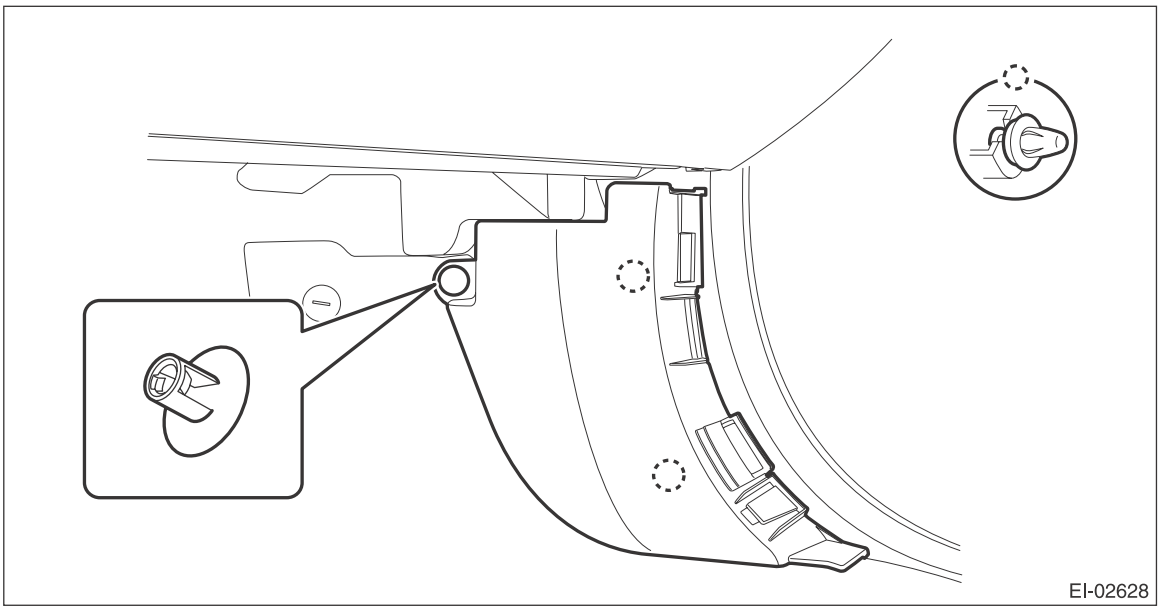

14) Disconnect the connector of door harness from body harness.

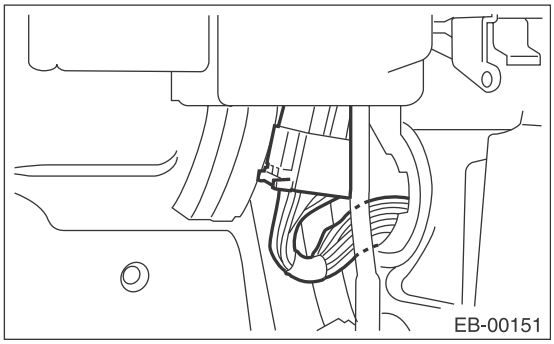

15) Before removing the door panel, make the following preparations.

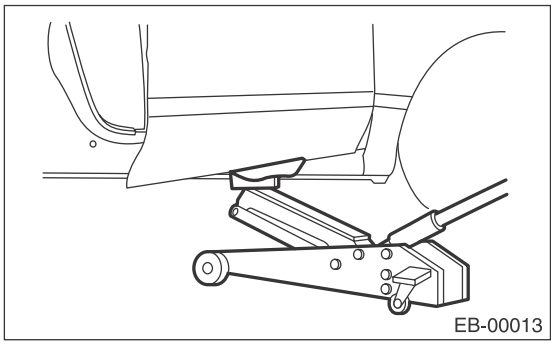

(1) Put a wooden block on a floor jack and place the jack under the front door.
(2) Support the door with a jack to protect it from damage.

CAUTION:
Do not lift the door panel with a floor jack excessively. The door hinges may be damaged.

16) Remove the door-side bolts for upper and lower hinges to remove front door panel.

CAUTION:
Door panels are heavy. When removing and installing them, always work in a team of two or more persons.

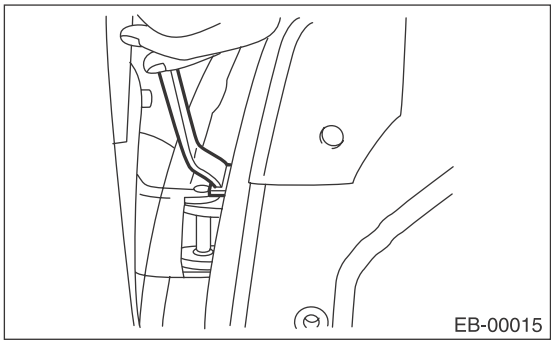

17) Remove the door hinge from vehicle.

B: INSTALLATION

1) Put a wooden block on jack and place the front door on that.

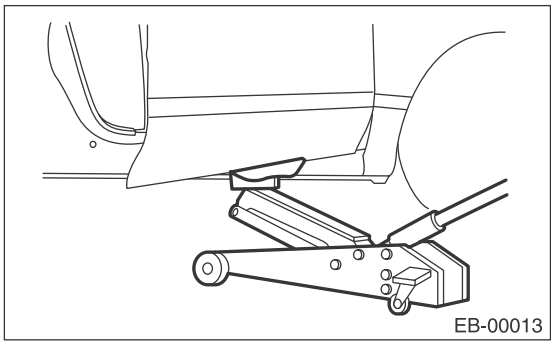

2) Apply grease to the sliding area of door hinges, and install the door hinge to vehicle.
3) Temporarily install the front door to upper hinge and lower hinge after adjusting the height by jack.

NOTE:
When installing, make sure that a uniform clearance is created around the front door panel.
4) Adjust the clearance around the front door panel. <Ref. to EB-28, ADJUSTMENT, Front Door.>
5) Tighten the bolts and nuts of door hinges and door checker.

Tightening torque:
Refer to "COMPONENT" of "General Description". <Ref. to EB-4, FRONT DOOR, COMPONENT, General Description.>

6) Install door internal parts in the reverse order of removal.
7) Connect the door harness connector, and install the front pillar lower trim.

C: ADJUSTMENT

Adjust the clearance around the front door panel as follows.

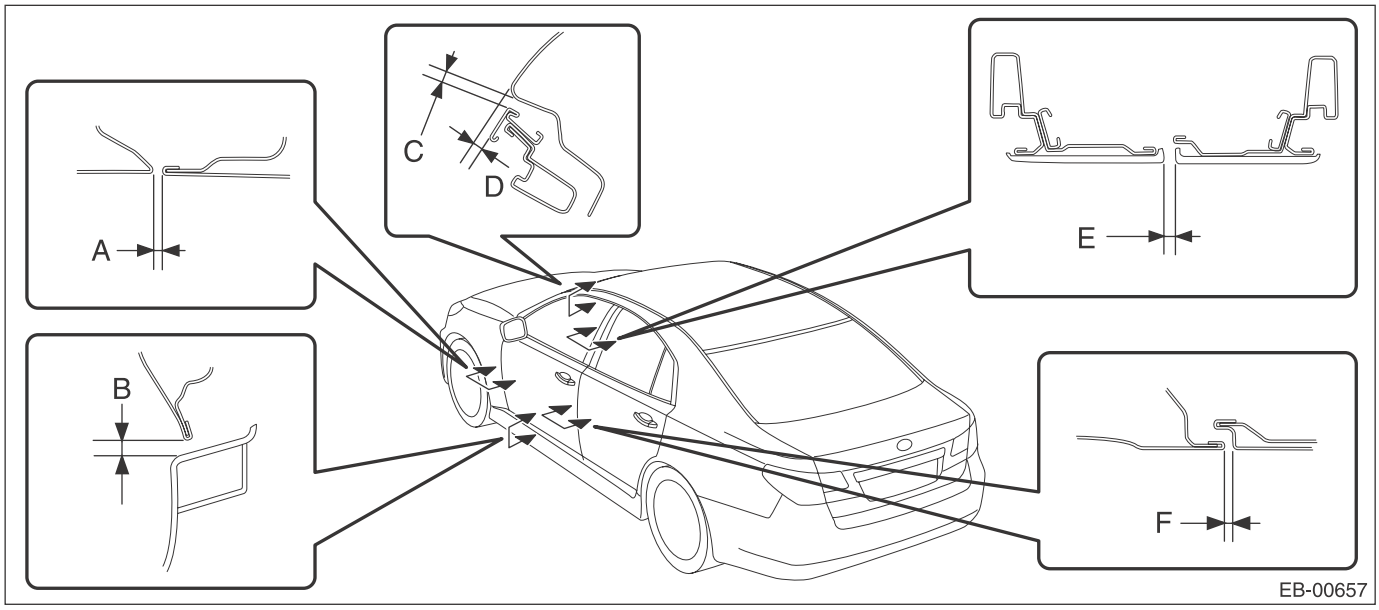

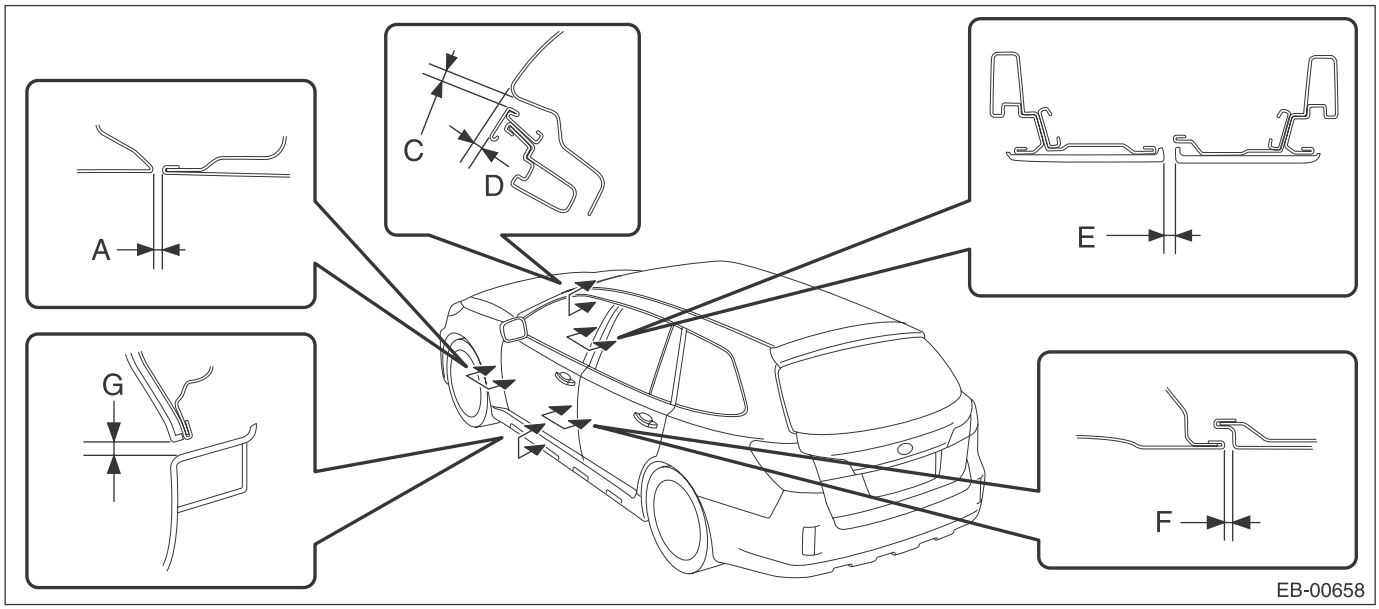

Part		Standard
A	Front fender panel to Front door panel	4.6±1.0 mm (0.18±0.04 in)
B	Front door panel to Side sill garnish (Sedan model)	6.0±1.5 mm (0.24±0.06 in)
C	Roof panel to Front door sash	5.0±1.0 mm (0.20±0.04 in)
D	Surface level gap between roof panel and front door sash	3.5±1.0 mm (0.14±0.04 in)
E	Front door sash to Rear door sash	5.5±1.0 mm (0.22±0.04 in)
F	Front door panel to Rear door panel	4.6±1.0 mm (0.18±0.04 in)
G	Front door garnish to Side sill garnish (OUTBACK model)	8.0±1.0 mm (0.31±0.04 in)

NOTE:
Common to sedan and OUTBACK models

1) Adjust the vertical and horizontal positions of front door panel.

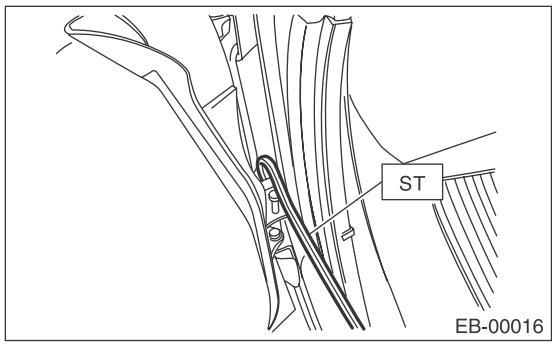

SPECIAL TOOL (ST) WRENCH 925610000

(1) Using ST, loosen the body side bolts of the upper and lower hinges.
(2) Adjust the vertical and horizontal clearance of front door panel.

2) Adjust the surface level gap between front door panel and rear door.

CAUTION:
Do not use an impact wrench. Welding area on the striker nut plate is easily broken.

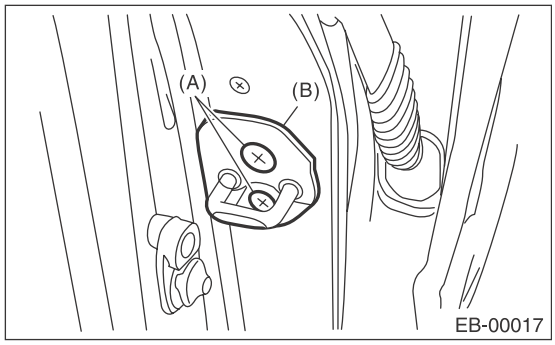

(1) Loosen the screws (A).
(2) Tap the striker (B) using a plastic hammer to adjust the surface level gap between rear end of front door panel and front end of rear door panel.

5. Front Sealing Cover

A: REMOVAL

1) Disconnect the ground cable from battery.
2) Remove the gusset cover.
   (1) Attach the protective tape (a) to the door trim.
   (2) Release the clips and claws, then detach the gusset cover.

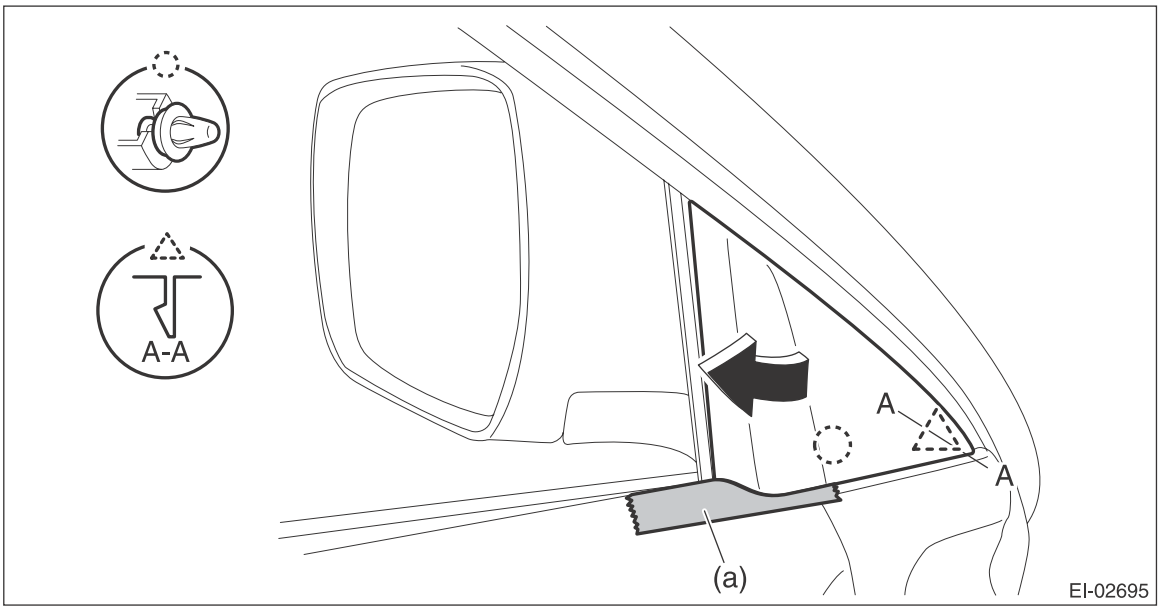

3) Remove the door trim assembly.
   (1) Open the cover and remove the screw.
   (2) Remove the clips in the order of (A) to (J) and remove the door trim assembly from the door panel.

CAUTION:
When removing the door trim, be sure to remove the clips in the correct order. Forcibly removing clips may damage the door panel assembly.

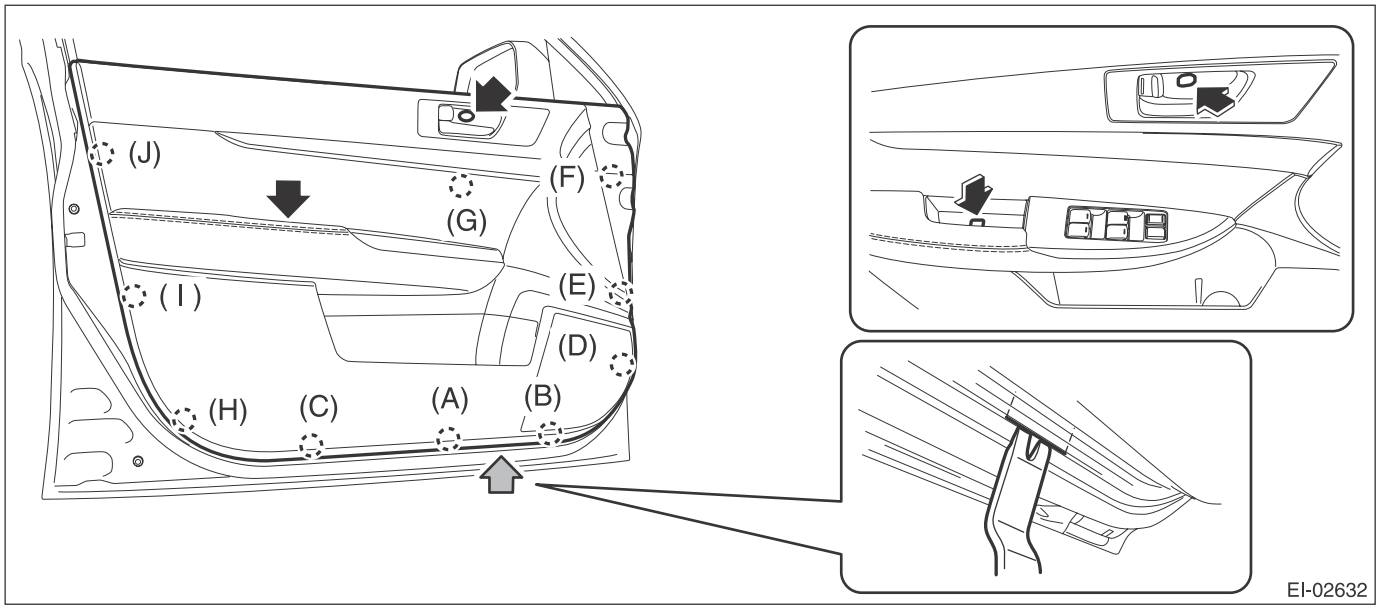

NOTE:
Insert a plastic clip remover into the slit at the bottom edge of the door trim and lift the door trim.

(3) Remove the cables (a) and (b) from the cable holder of inner remote.

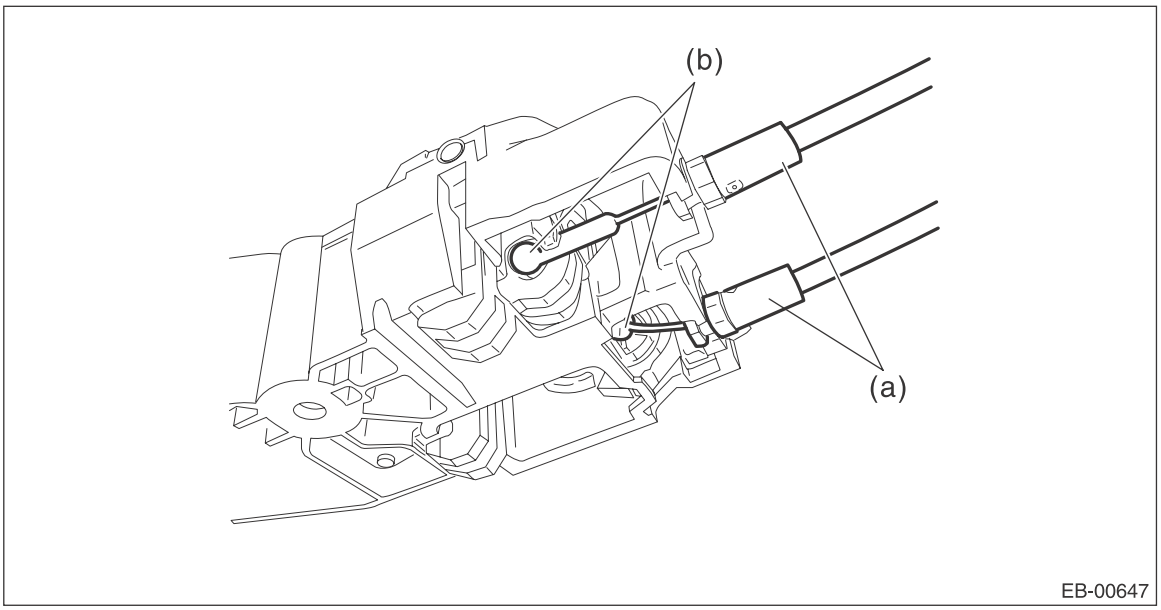

(4) Disconnect the harness connector and remove the door trim assembly.

4) Remove the sealing cover.

CAUTION:
- **Carefully remove the butyl tape. Excessive force will easily break the cover.**
- **If the sealing cover gets broken, replace it with a new part.**

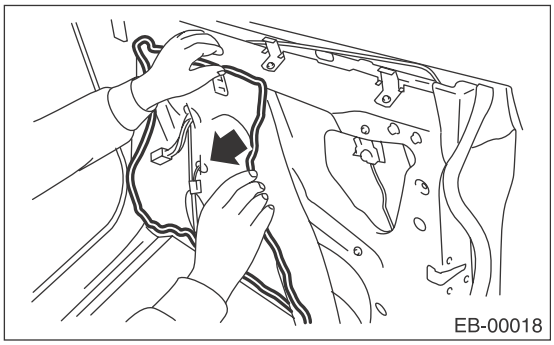

B: INSTALLATION

CAUTION:
- **If the sealing cover gets broken, replace it with a new part.**
- **Apply a uniform bead of butyl tape.**
- **Attach the sealing cover, keeping it from becoming wrinkled.**
- **Breaks in the bead will allow water leakage and contamination.**

1) Install each part in the reverse order of removal.
2) When replacing the sealing cover, use the butyl tape.
3) Press the butyl tape-applied area firmly to prevent any floating on surface.

Butyl tape:
3M8626 or equivalent

C: INSPECTION

If the sealing cover gets damaged, replace it with a new part.

6. Rear Door

A: REMOVAL

1) Disconnect the ground cable from battery.
2) Remove the rear door trim. <Ref. to EI-61, REAR DOOR, REMOVAL, Door Trim.>
3) Remove the rear door speaker assembly.
   (1) Remove the screws.
   (2) Disconnect the harness connector and remove the rear speaker assembly.

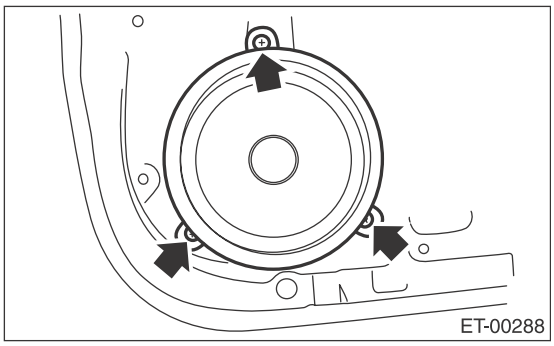

4) Remove the rear sealing cover.

CAUTION:
- **Carefully remove the butyl tape. Excessive force will easily break the cover.**
- **If the sealing cover gets broken, replace it with a new part.**

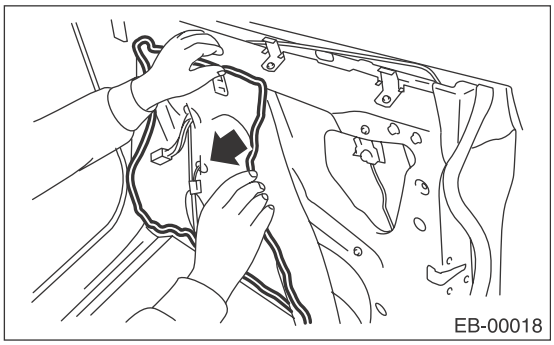

5) Remove the door sash and rear door glass. <Ref. to GW-32, REMOVAL, Rear Door Glass.>
6) Remove the rear door regulator and motor assembly. <Ref. to GW-34, REMOVAL, Rear Regulator and Motor Assembly.>
7) Remove the rear door latch. <Ref. to SL-42, REMOVAL, Rear Door Latch and Door Lock Actuator Assembly.>
8) Remove the rear outer handle. <Ref. to SL-39, REMOVAL, Rear Outer Handle.>
9) Remove the rear door weather strip.

CAUTION:
If the weather strip clip is removed with excessive force, the weather strip may be damaged. Be sure to use clip remover to remove.

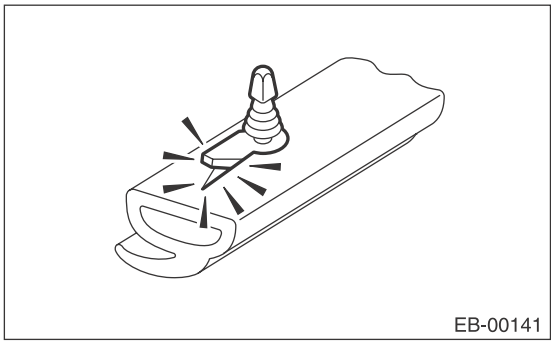

10) Remove the bolts and nuts to remove the door checker.

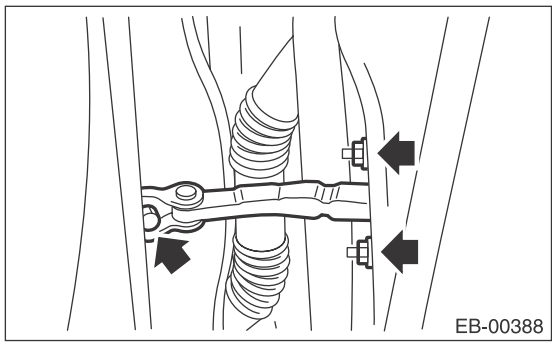

11) Disconnect the rear door harness connectors.

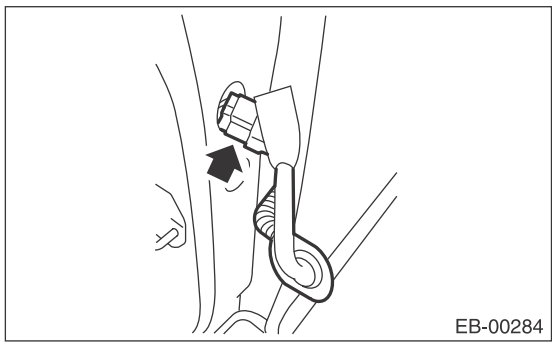

(1) Remove the grommet and pull out the rear door harness connector from inside the center pillar.
(2) Disconnect the rear door harness connectors.

12) Before removing the door panel, make the following preparations.

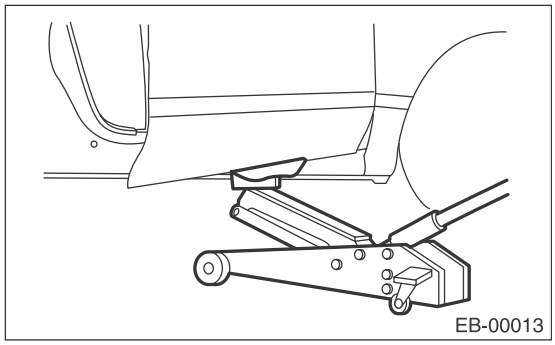

(1) Put a wooden block on a floor jack and place the jack under the front door.
(2) Support the door with a jack to protect it from damage.

CAUTION:
Do not lift the door panel with a floor jack excessively. The door hinges may be damaged.

13) Remove the door-side bolts for upper and lower hinges to remove the rear door panel.

CAUTION:
Door panels are heavy. When removing and installing them, always work in a team of two or more persons.

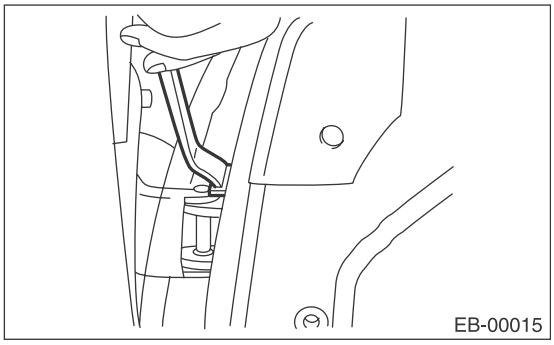

14) Remove the door hinge from vehicle.

B: INSTALLATION

1) Put a wooden block on jack and place the rear door on that.

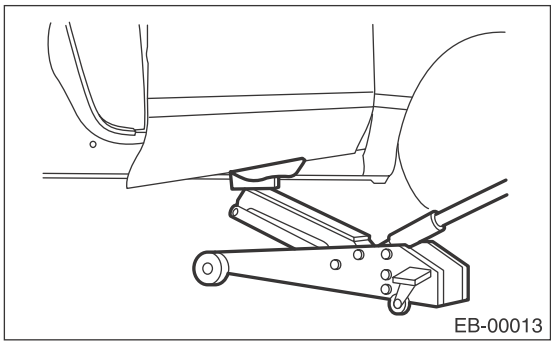

2) Apply grease to the moving part of door hinges.
3) Temporarily install the rear door to upper hinge and lower hinge after adjusting the height by jack.

NOTE:
When installing, make sure that a uniform clearance is created around the rear door panel.

4) Adjust the clearance around the rear door panel. <Ref. to EB-35, ADJUSTMENT, Rear Door.>
5) Tighten the bolts and nuts of door hinges and door checker.

Tightening torque:
Refer to "COMPONENT" of "General Description". <Ref. to EB-5, REAR DOOR, COMPONENT, General Description.>

6) Install door internal parts in the reverse order of removal.
7) Connect the door harness connector, and install the center pillar lower trim.

C: ADJUSTMENT

Adjust the clearance around the rear door panel as follows.

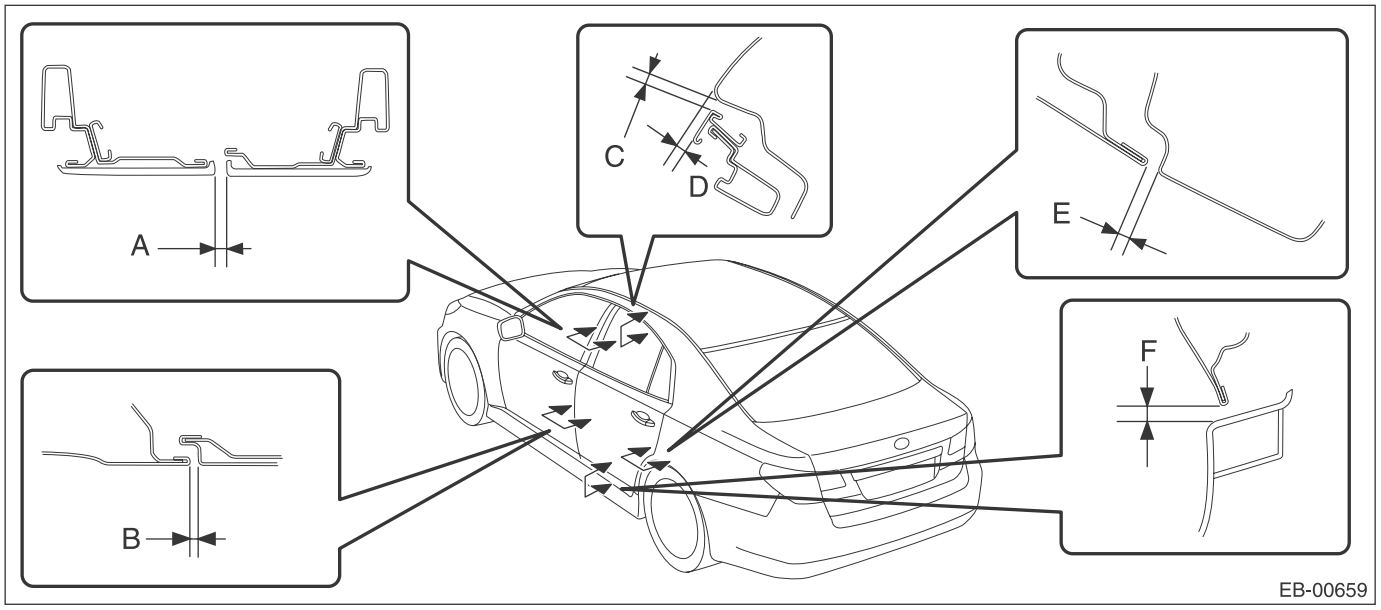

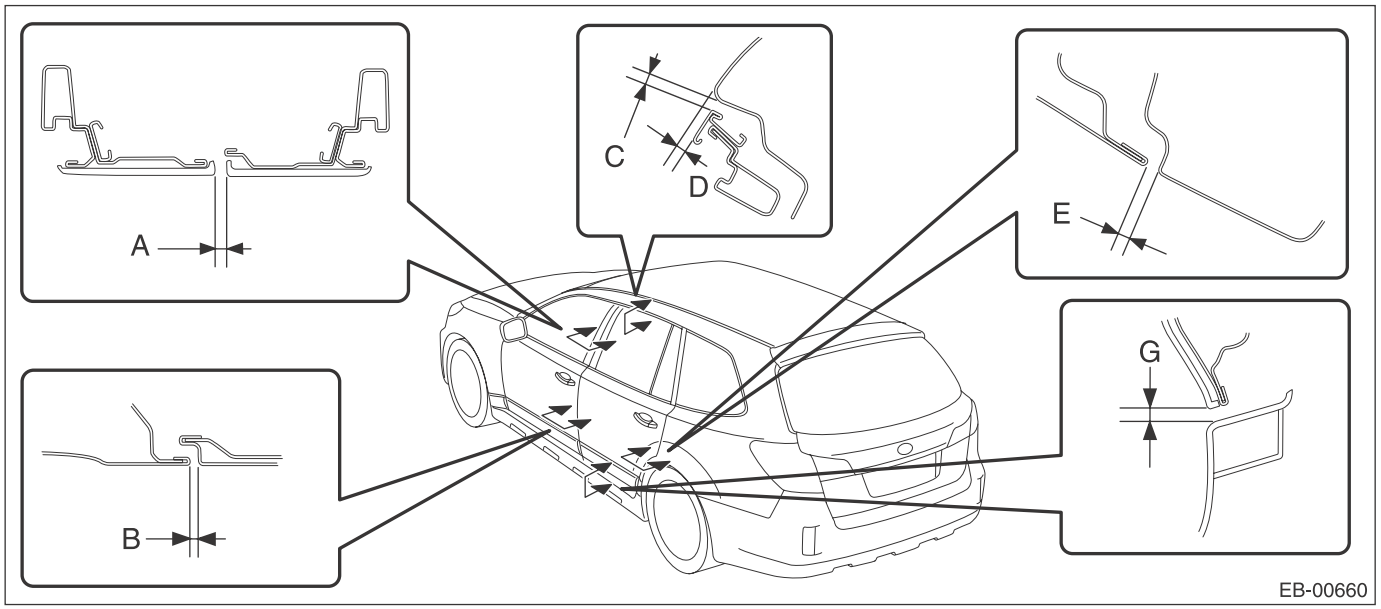

Part		Standard
A	Front door sash to Rear door sash	5.5±1.0 mm (0.22±0.04 in)
B	Front door panel to Rear door panel	4.6±1.0 mm (0.18±0.04 in)
C	Roof panel to Rear door sash	5.0±1.0 mm (0.20±0.04 in)
D	Surface level gap between roof panel and rear door sash	3.5±1.0 mm (0.14±0.04 in)
E	Rear door panel to Rear quarter panel	4.0±1.0 mm (0.16±0.04 in)
F	Rear door panel to Side sill garnish (Sedan model)	6.0±1.5 mm (0.24±0.06 in)
G	Rear door garnish to Side sill garnish (OUTBACK model)	8.0±1.0 mm (0.31±0.04 in)

1) Adjust the vertical and horizontal positions of rear door panel.

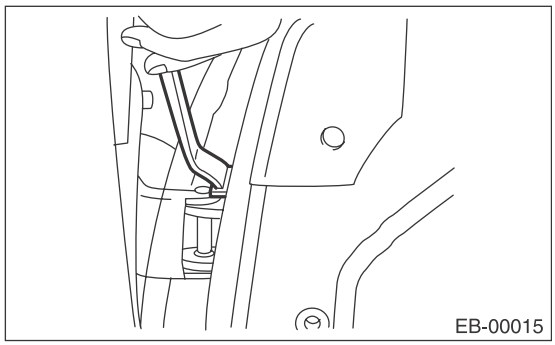

(1) Loosen the body side bolts of upper and lower hinges.
(2) Adjust the vertical and horizontal clearance of rear door panel.

2) Adjust the surface level gap between rear door panel and body.

CAUTION:
Do not use an impact wrench. Welding area on the striker nut plate is easily broken.

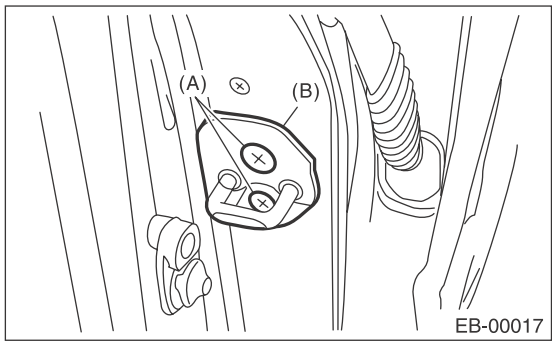

(1) Loosen the screws (A).
(2) Tap the striker (B) using a plastic hammer to adjust the surface level gap between rear end of rear door panel and rear quarter.

7. Rear Sealing Cover

A: REMOVAL

1) Disconnect the ground cable from battery.
2) Remove the door trim assembly.
   (1) Open the cover and remove the screw.
   (2) Remove the clips in the order of (A) to (H) and remove the door trim assembly from the door panel.

CAUTION:
When removing the door trim, be sure to remove the clips in the correct order. Forcibly removing clips may damage the door panel assembly.

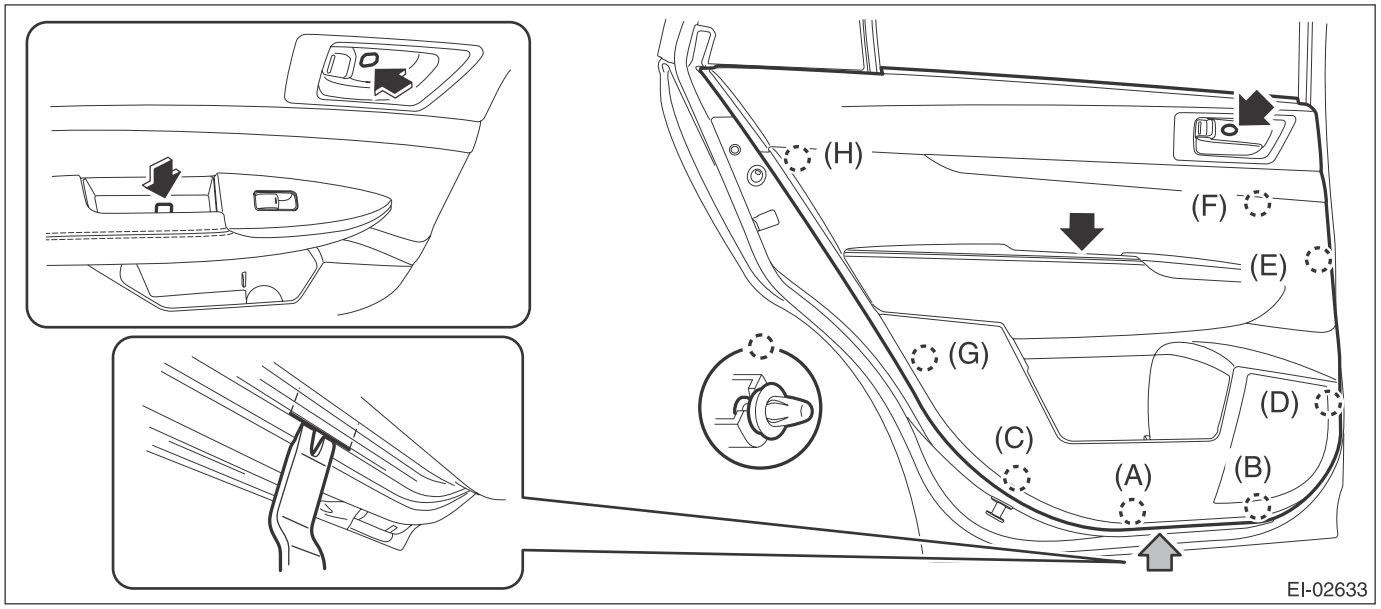

NOTE:
Insert a plastic clip remover into the slit at the bottom edge of the door trim and lift the door trim.
   (3) Remove the cables (a) and (b) from the cable holder of inner remote.

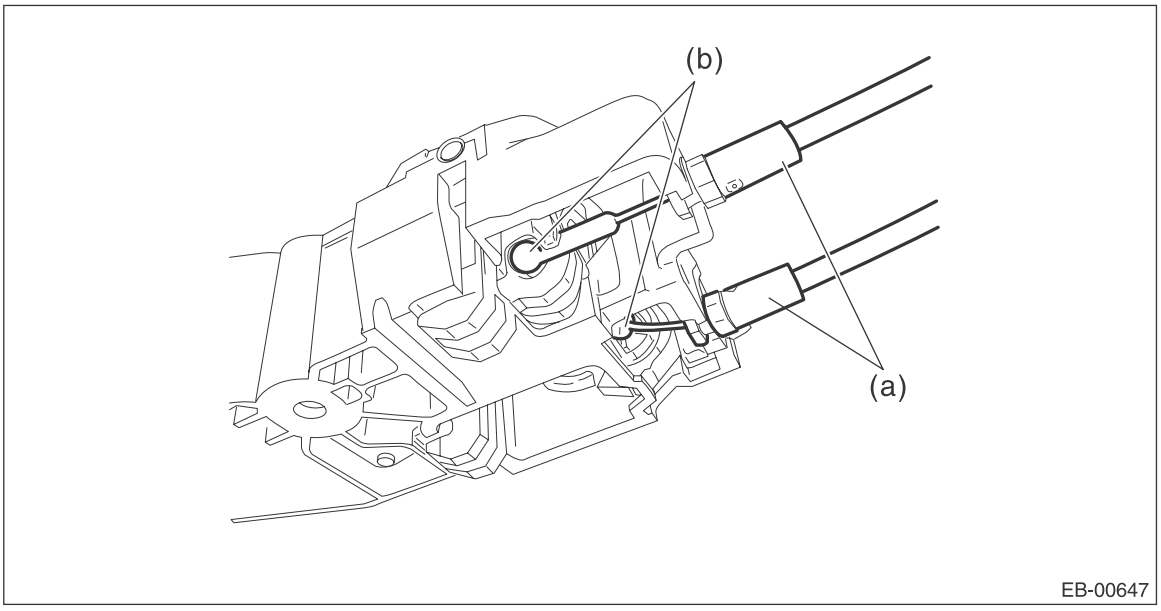

   (4) Disconnect the harness connector and remove the door trim.

3) Remove the sealing cover.

CAUTION:
- **Carefully remove the butyl tape. Excessive force will easily break the cover.**
- **If the sealing cover gets broken, replace it with a new part.**

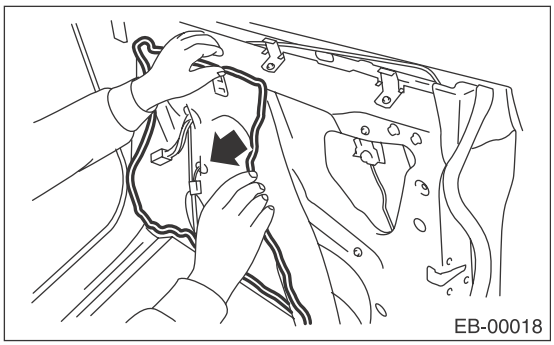

B: INSTALLATION

CAUTION:
- **If the sealing cover gets broken, replace it with a new part.**
- **Apply a butyl tape evenly.**
- **Attach the sealing cover, keeping it from becoming wrinkled.**
- **Breaks in the bead will allow water leakage and contamination.**

1) Install each part in the reverse order of removal.
2) When replacing the sealing cover, use the butyl tape.
3) Press the butyl tape-applied area firmly to prevent any floating on surface.

Butyl tape:
3M8626 or equivalent

C: INSPECTION

If the sealing cover gets damaged, replace it with a new part.

8. Door Sash Tape

A: REMOVAL

1. FRONT DOOR

1) Disconnect the ground cable from battery.
2) Remove the front door trim. <Ref. to EI-60, FRONT DOOR, REMOVAL, Door Trim.>
3) Remove the outer mirror assembly. <Ref. to GW-25, REMOVAL, Outer Mirror Assembly.>
4) Remove the sealing cover.

CAUTION:
- **Carefully remove the butyl tape. Excessive force will easily break the cover.**
- **If the sealing cover gets broken, replace it with a new part.**

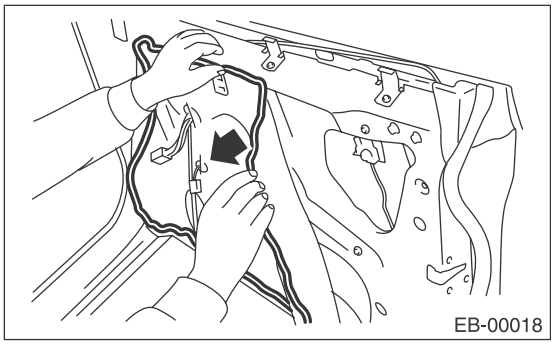
EB-00018

5) Remove the front door glass. <Ref. to GW-16, REMOVAL, Front Door Glass.>
6) Remove the glass run rubber.
7) Release the clips, and remove the inner cover.

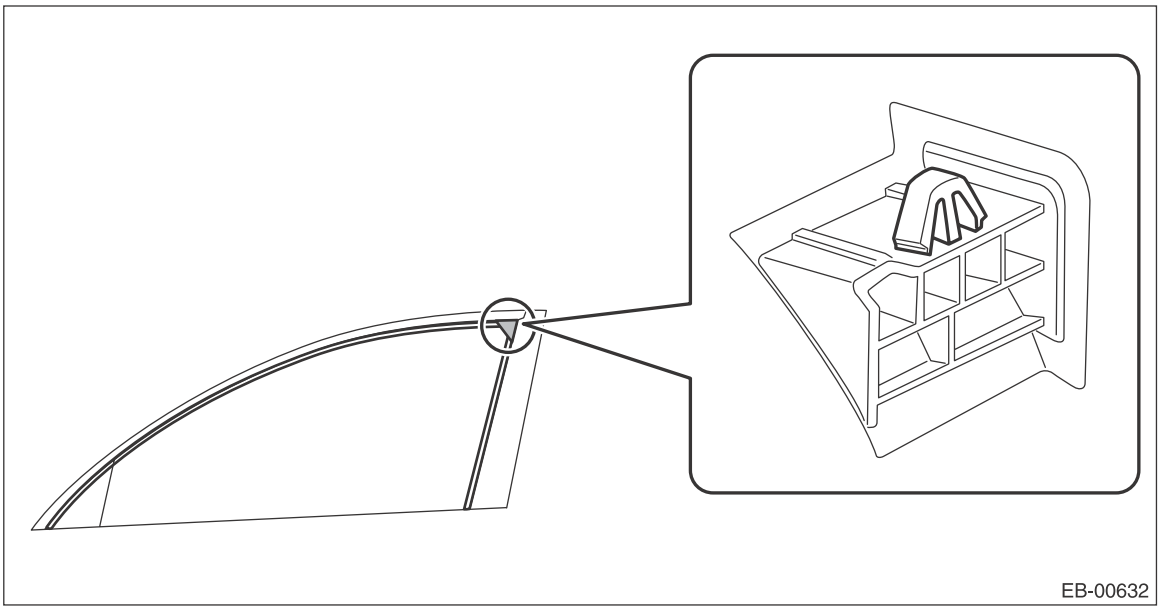
EB-00632

8) Detach the inner tape.

NOTE:
- If the tape is difficult to detach, warm it by a hot air drier.

Make sure to use a home use drier. Do not use an industrial use drier.
- Wipe away any trace of tape adhesive from the door sash.

2. REAR DOOR

1) Disconnect the ground cable from battery.
2) Remove the rear door trim. <Ref. to EI-61, REAR DOOR, REMOVAL, Door Trim.>
3) Remove the sealing cover.

CAUTION:
- **Carefully remove the butyl tape. Excessive force will easily break the cover.**
- **If the sealing cover gets broken, replace it with a new part.**

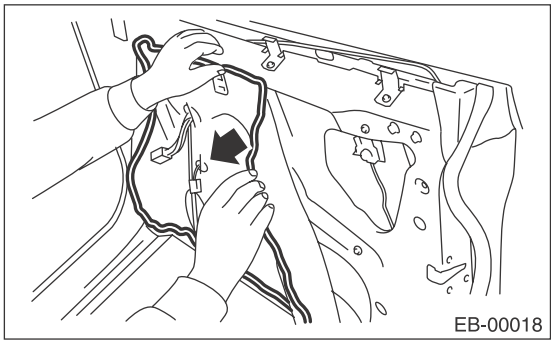

4) Remove the door sash and rear door glass. <Ref. to GW-32, REMOVAL, Rear Door Glass.>
5) Remove the glass run rubber.
6) Release the clips, and remove the inner cover.
- Sedan model

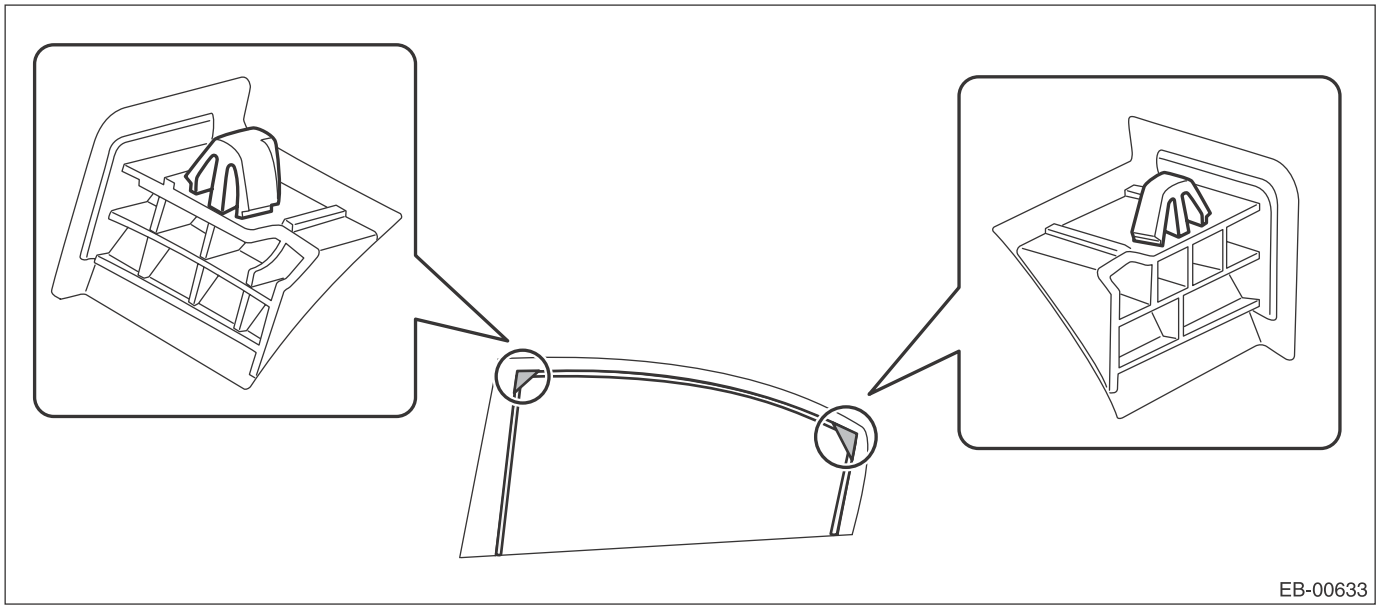

- OUTBACK model

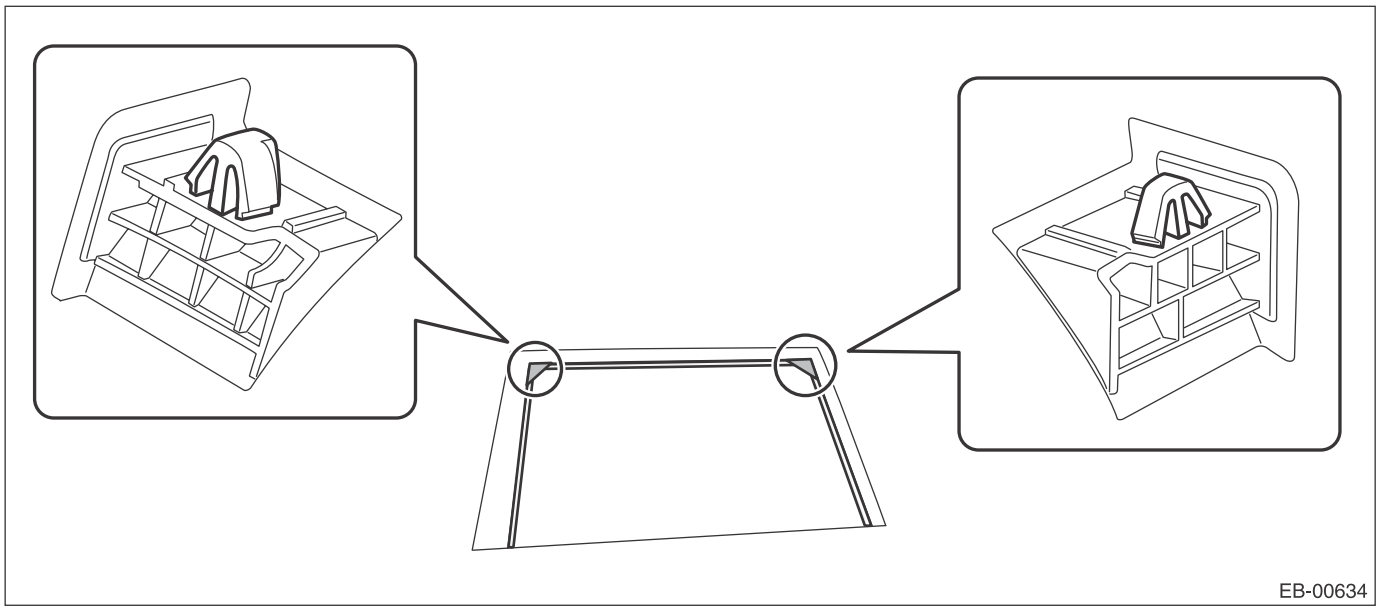

7) Detach the inner tape.

NOTE:
- If the tape is difficult to detach, warm it by a hot air drier.

Make sure to use a home use drier. Do not use an industrial use drier.
- Wipe away any trace of tape adhesive from the door sash.

B: INSTALLATION

CAUTION:
- **Press evenly along the sash when applying the tape using a spatula or similar object to make sure no bubbles are formed.**

If any bubbles are formed, replace the tape.
- **If any wrinkles form in the tape while applying, replace the tape with new tape.**
- **Be sure to press the ends of the tape firmly to adhere securely. If the tape comes off at the ends or where folded, the adhesive strength is weakened and the tape may peel off.**

1) Apply the inner tape along the arrow directions.
- Front

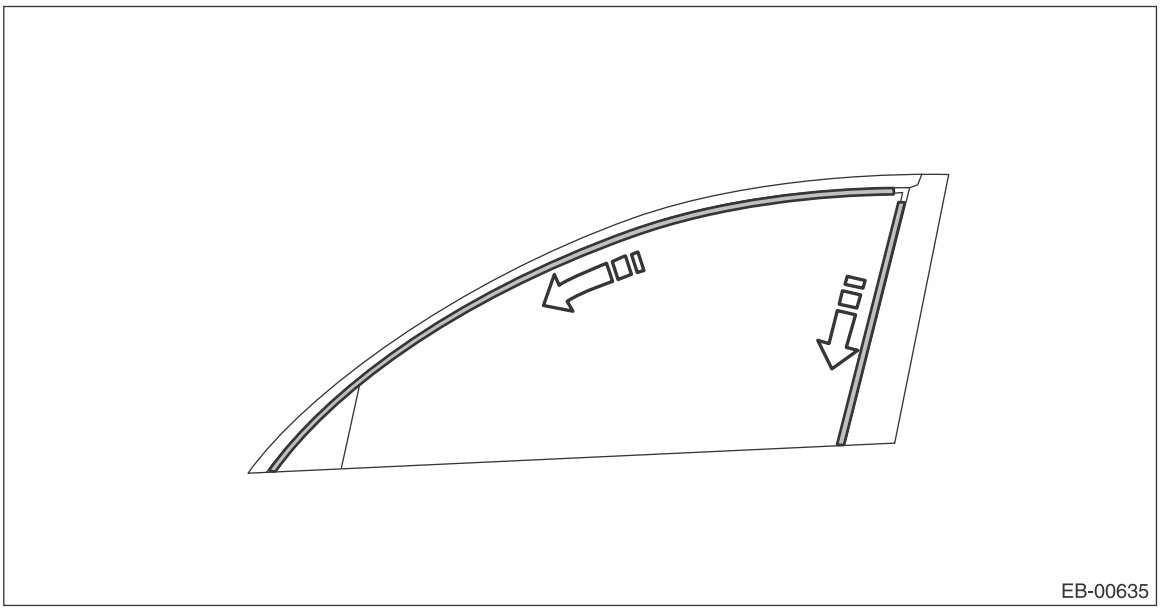

- Rear

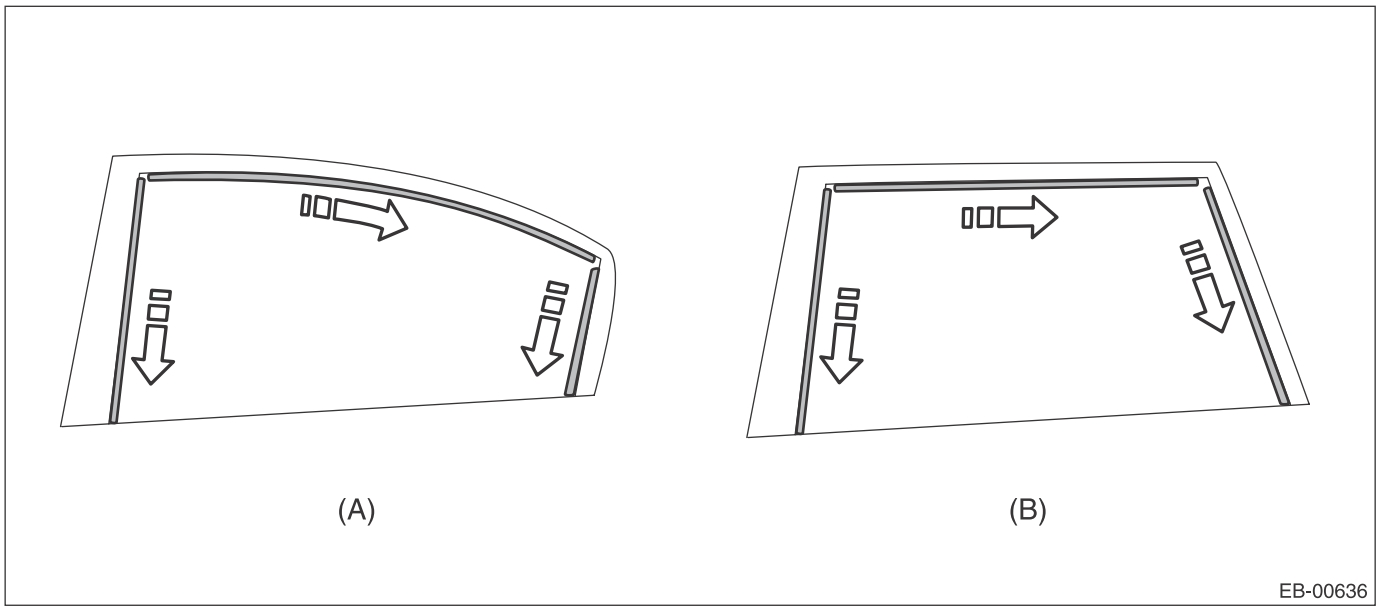

(A) Sedan model (B) OUTBACK model

2) Install the remaining parts in the reverse order of removal.

9. Trunk Lid

A: REMOVAL

1. TRUNK LID DAMPER STAY

1) Open the trunk lid.
2) Remove the trunk lid damper stay.
   (1) Float the lock pin using a flat tip screwdriver, etc. and slide it.
   (2) Remove the trunk lid damper stay by pulling the damper stay mounting point.

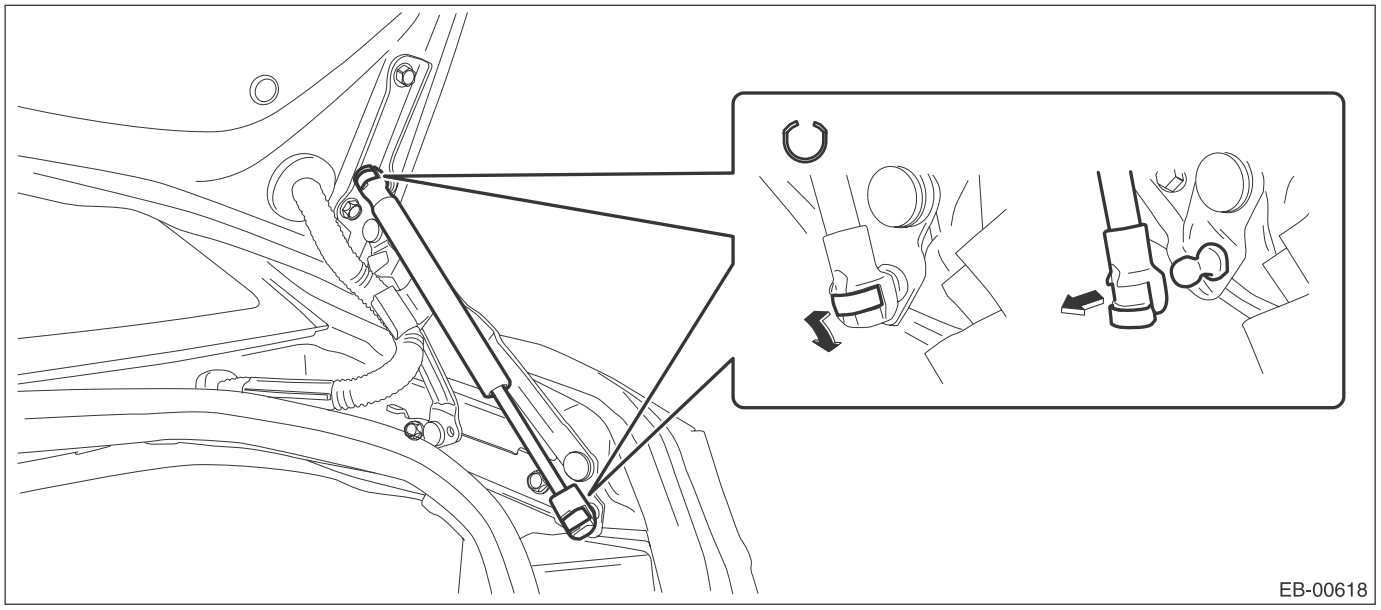

2. TRUNK LID HINGE

1) Open the trunk lid.
2) Remove the trunk lid damper stay.
   (1) Float the lock pin using a flat tip screwdriver, etc. and slide it.
   (2) Remove the trunk lid damper stay by pulling the damper stay mounting point.

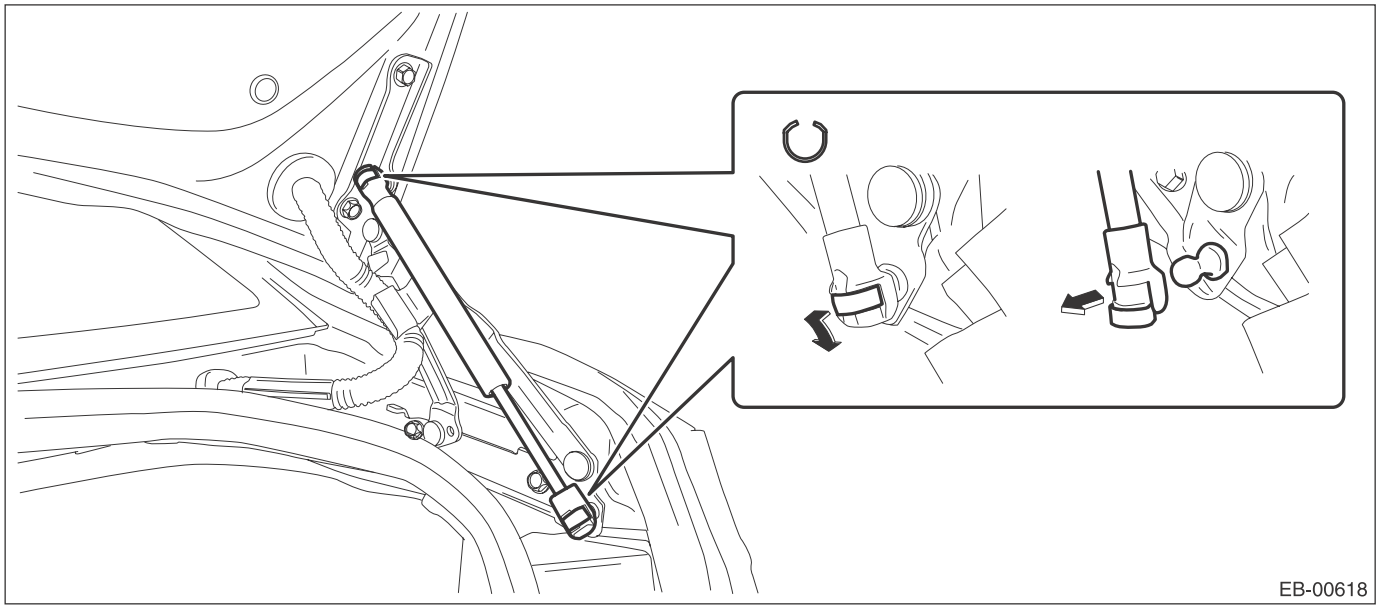

3) Remove the trunk lid trim.
   (1) Remove the trunk handle.

(2) Remove the clips and the trunk lid trim.

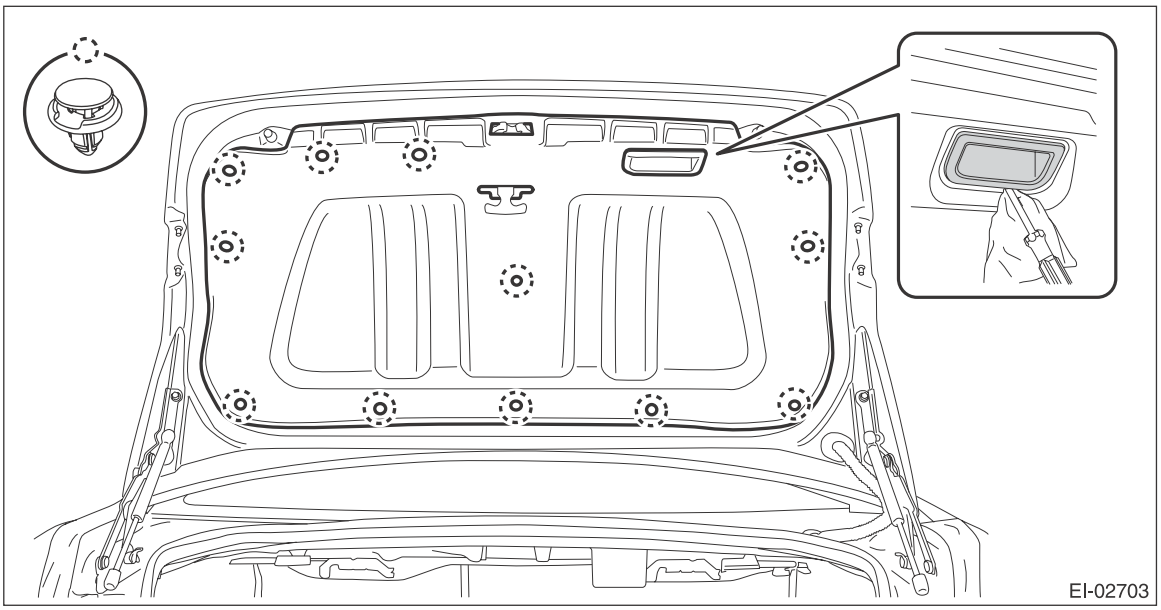

4) Remove the trunk lid hinges.
(1) Disconnect the trunk lid harness connector and remove the grommet, and pull out the trunk lid harness.
(2) Remove the harness clamps and bolts, and remove the trunk lid panel.
(3) Remove the bolts, then remove the trunk lid hinge.

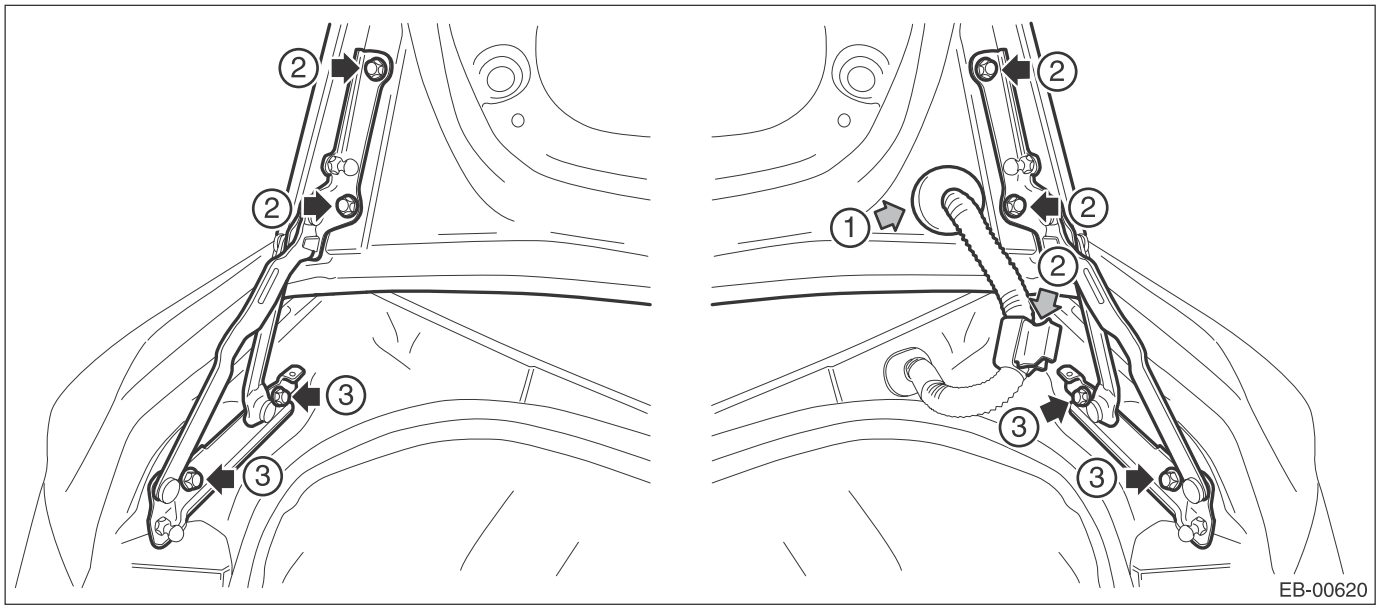

3. TRUNK LID PANEL

1) Disconnect the ground cable from battery.
2) Remove the trunk lid trim.
   (1) Remove the trunk handle.
   (2) Remove the clips and the trunk lid trim.

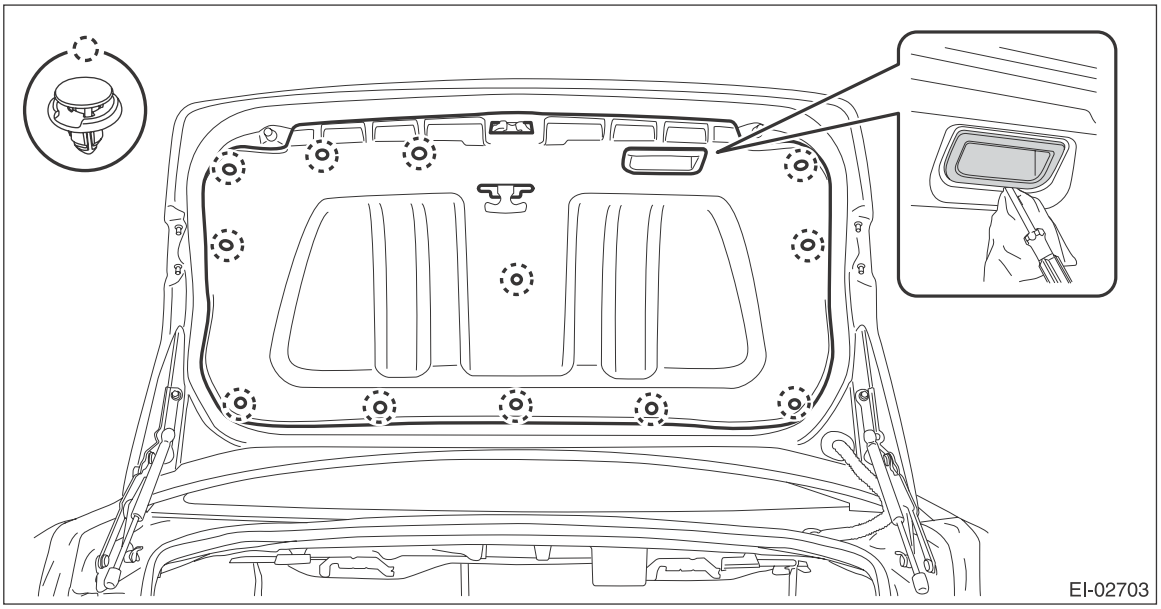

3) Disconnect the connector to remove the trunk lid harness.
4) Remove the trunk lid latch&actuator assembly. <Ref. to SL-50, REMOVAL, Trunk Lid Latch and Actuator Assembly.>
5) Remove the trunk lid garnish. <Ref. to EI-163, REMOVAL, Trunk Lid Garnish.>
6) Remove the trunk lid panel.
   (1) Remove the left and right damper stay upper.
   (2) Remove the grommet and pull out the trunk lid harness. (RH side only)
   (3) Remove the left and right bolts, and remove the trunk lid panel.

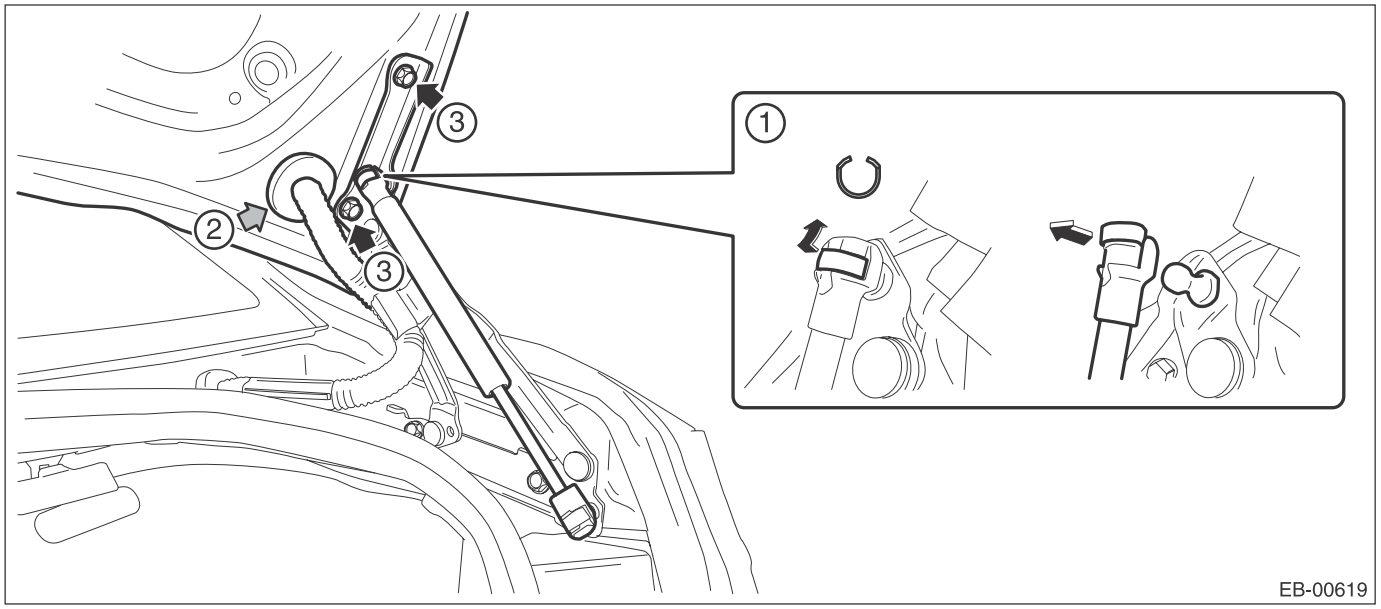

B: INSTALLATION

1) Install each part in the reverse order of removal.
2) Apply grease to the rotating area of hinges and damper stay.
3) Install while paying attention to make a uniform clearance around the trunk lid panel. <Ref. to EB-46, ADJUSTMENT, Trunk Lid.>

Tightening torque:
Refer to "COMPONENT" of "General Description". <Ref. to EB-6, TRUNK LID PANEL, COMPONENT, General Description.>

C: ADJUSTMENT

Adjust the clearance around the trunk lid panel as follows.

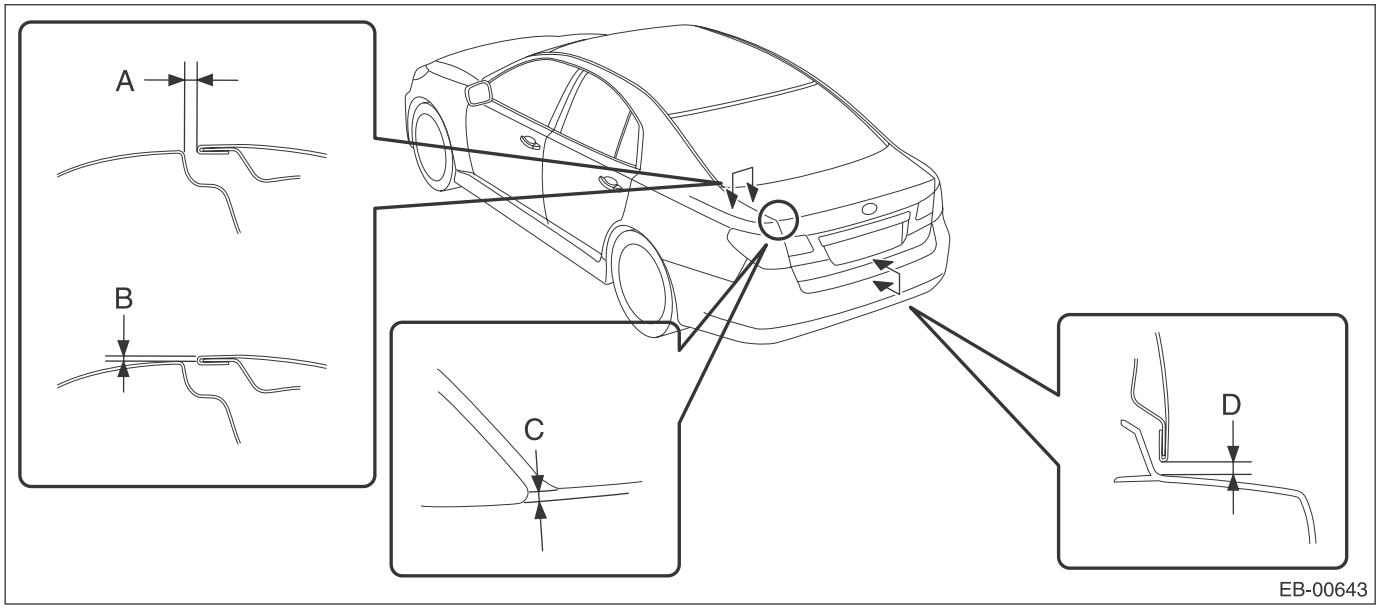

Part		Standard
A	Trunk lid panel to Rear quarter panel	3.5±1.0 mm (0.14±0.04 in)
B	Surface level gap between trunk lid panel and rear quarter panel	–0.5+1.0, –0.5 mm (0+0.04, –0.02 in)
C	Offset value between trunk lid panel and rear end of rear quarter panel	–0.5±0.7 mm (0.02±0.03 in)
D	Trunk lid panel to Rear bumper	7.0±1.5 mm (0.28±0.06 in)

1) Adjust the horizontal position of trunk lid panel.
   (1) Loosen the mounting bolts.

(2) Adjust the horizontal clearance of trunk lid panel.

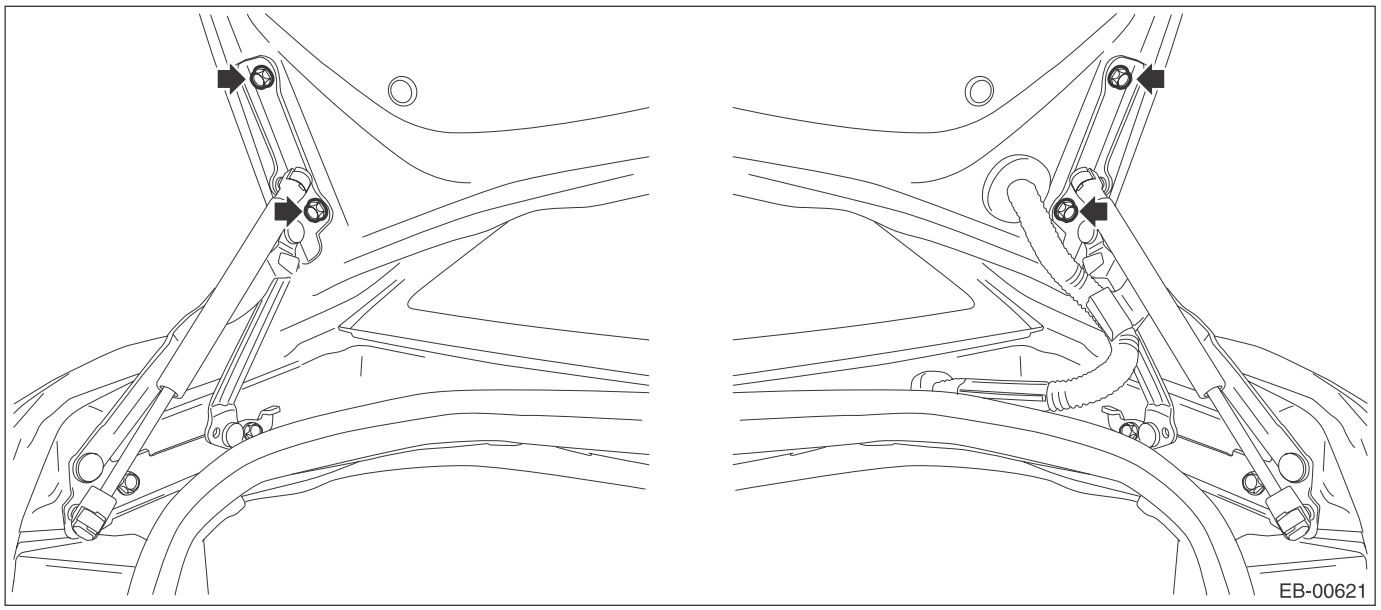

2) Adjust the surface level gap between trunk lid panel and body.
(1) Loosen the bolts.
(2) Tap the striker using a plastic hammer to adjust the surface level gap between trunk lid panel and body.

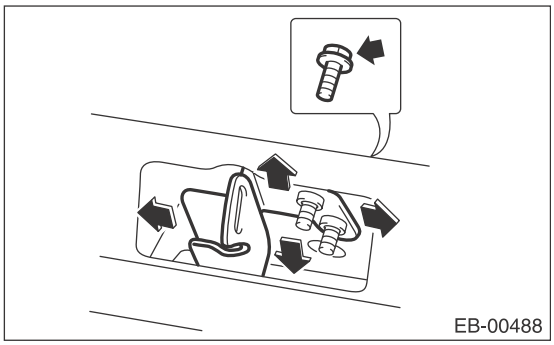

10.Rear Gate

A: REMOVAL

CAUTION:
Rear gate panels are heavy. When removing and installing them, always work in a team of two or more persons.

1. REAR GATE PANEL

1) Disconnect the ground cable from battery.
2) Remove the following parts. <Ref. to EI-164, REMOVAL, Rear Gate Garnish.>
- Rear gate trim
- Rear wiper arm assembly and rear wiper motor assembly
- Rear gate garnish

3) Remove the high-mounted stop light assembly and rear washer nozzle. <Ref. to WW-43, REMOVAL, Rear Washer.>
4) Remove the rear finisher light assembly. <Ref. to LI-54, OUTBACK MODEL, REMOVAL, Rear Finisher Light Assembly.>
5) Remove the rearview camera assembly. <Ref. to ET-41, OUTBACK MODEL, REMOVAL, Rearview Camera System.>
6) Remove the rear gate latch&actuator assembly. <Ref. to SL-48, REMOVAL, Rear Gate Latch and Actuator Assembly.>
7) Remove the clips, and then remove the rear gate drip rubber.

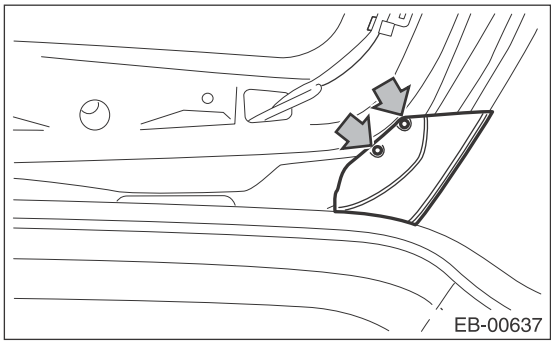

8) Disconnect the rubber duct (A) connection.

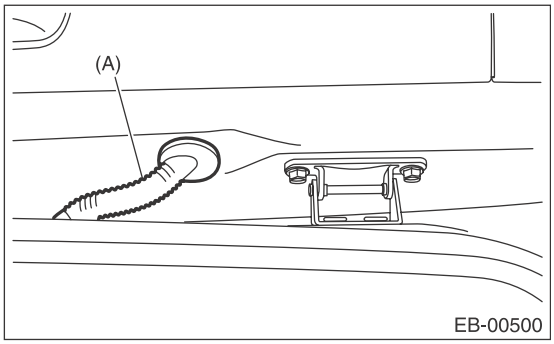

9) Pull out the harnesses and washer hose from the rear gate.
10) Remove harness clip of each connector from the rear gate panel.

11) Before removing the rear gate damper stay, prevent the rear gate from closing using prop or the like.

CAUTION:
If the prop comes off, operators may get injured and vehicle may get damaged. Make sure to support the rear gate with secure material to prevent injury or damage.

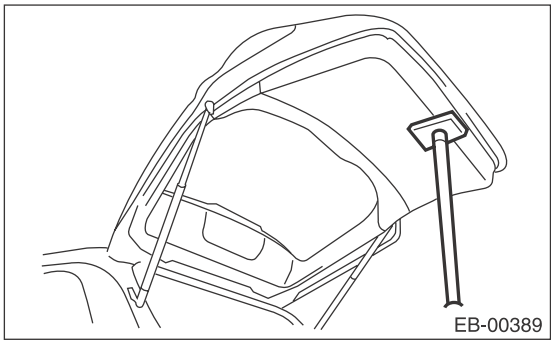

12) Remove the mounting bolt of rear gate damper stay.

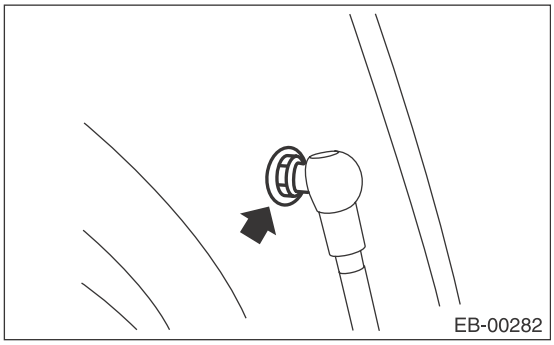

13) Remove the rear gate hinge bolt, and remove the rear gate panel.

CAUTION:
Rear gate panels are heavy. When removing and installing them, always work in a team of two or more persons.

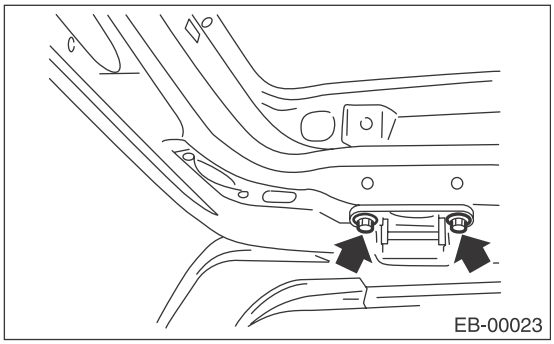

14) Remove the rear gate hinge from the vehicle.

2. REAR GATE DAMPER STAY

CAUTION:
- **Do not damage piston rods and oil seals.**
- **Never disassemble cylinders: They contain gas.**
- **Rear gate panels are heavy. When removing and installing them, always work in a team of two or more persons.**

1) Before removing the rear gate damper stay, prevent the rear gate from closing using prop or the like.

CAUTION:
If the prop comes off, operators may get injured and vehicle may get damaged. Make sure to support the rear gate with secure material to prevent injury or damage.

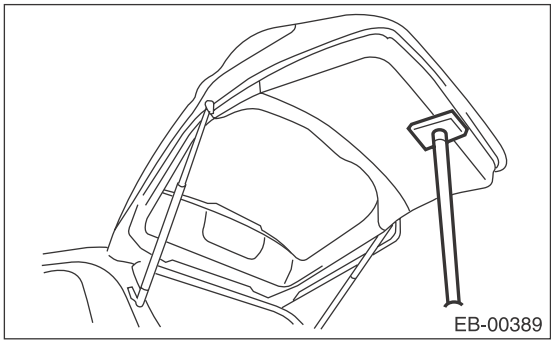

2) Remove the rear gate damper stay by removing mounting bolts.

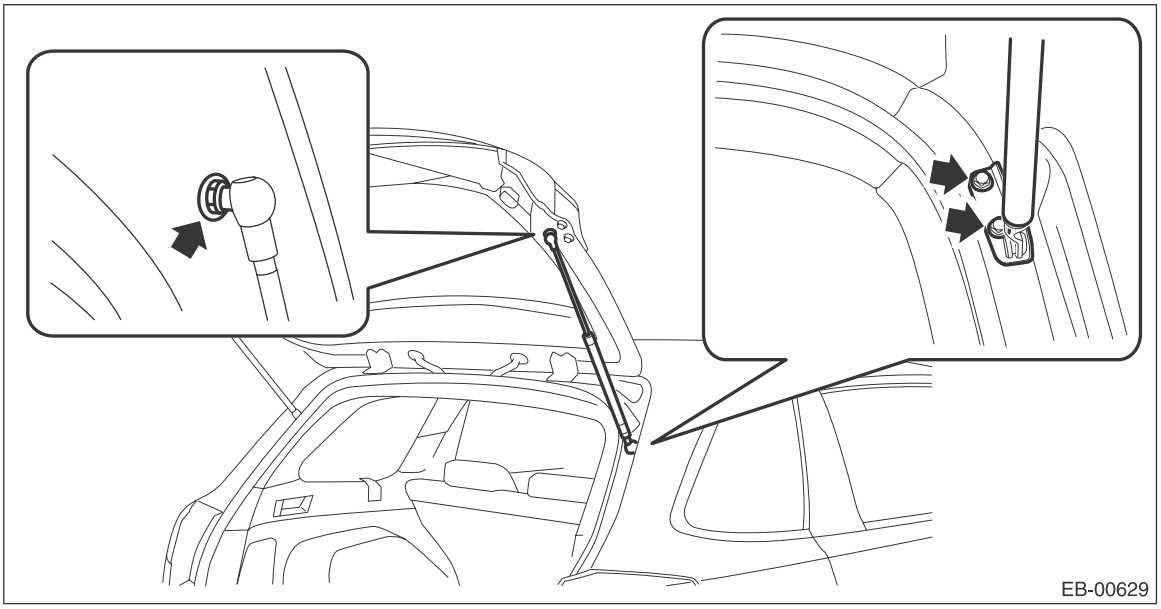

B: INSTALLATION

1. REAR GATE PANEL

CAUTION:
Rear gate panels are heavy. When removing and installing them, always work in a team of two or more persons.

1) Install the rear gate hinges to the vehicle body.
2) Temporarily install the rear gate panel to the rear gate hinges.

NOTE:
When installing, make sure that a uniform clearance is created around the rear gate panel.

3) Adjust the clearance around the rear gate panel. <Ref. to EB-52, ADJUSTMENT, Rear Gate.>
4) Tighten the rear gate hinge bolts.

Tightening torque:
25 N·m (2.55 kgf-m, 18.4 ft-lb)

5) Install each part in the reverse order of removal.

Tightening torque:
Rear gate parts:<Ref. to EB-7, REAR GATE, COMPONENT, General Description.>
Rear gate garnish: 4.5 N·m (0.46 kgf-m, 3.3 ft-lb)
Rear wiper motor & rear wiper arm:<Ref. to WW-4, REAR WIPER, COMPONENT, General Description.>

2. REAR GATE DAMPER STAY

CAUTION:
Rear gate panels are heavy. When removing and installing them, always work in a team of two or more persons.

1) Prevent the rear gate from closing using prop or the like.

CAUTION:
If the prop comes off, operators may get injured and vehicle may get damaged. Make sure to support the rear gate with secure material to prevent injury or damage.

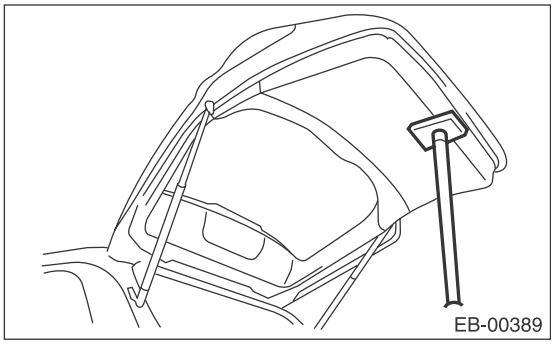

2) Install each part in the reverse order of removal.

Tightening torque:
Refer to "COMPONENT" of "General Description". <Ref. to EB-7, REAR GATE, COMPONENT, General Description.>

C: ADJUSTMENT

Adjust the clearance around the rear gate panel as follows.

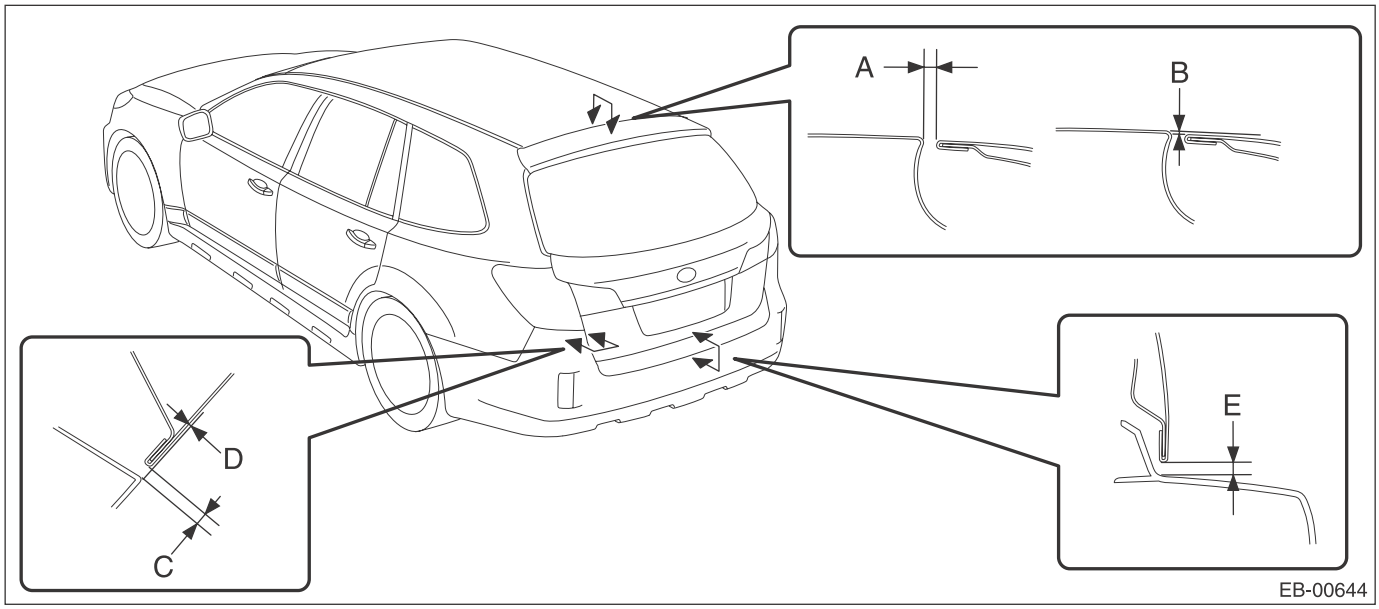

Part		Standard
A	Rear gate panel to Roof panel	6.6+1.0, –0.5 mm (0.26+0.04, –0.02 in)
B	Surface level gap between rear gate panel and roof panel	1.0±1.0 mm (0.04±0.04 in)
C	Rear gate panel to Rear bumper	5.0±1.0 mm (0.20±0.04 in)
D	Surface level gap between rear gate panel and rear bumper	0.4±1.0 mm (0.02±0.04 in)
E	Rear gate panel to Rear bumper	8.0±1.5 mm (0.31±0.06 in)

1) Adjust the vertical and horizontal positions of rear gate panel.

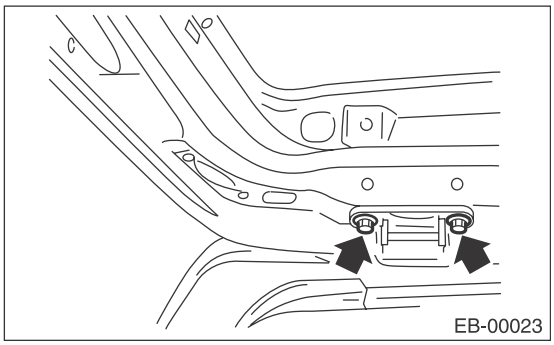

(1) Loosen the hinge mounting bolts.
(2) Adjust the vertical and horizontal clearance of rear gate panel.

Tightening torque:
25 N·m (2.55 kgf-m, 18.4 ft-lb)

2) Adjust the surface level gap between rear gate panel and body.

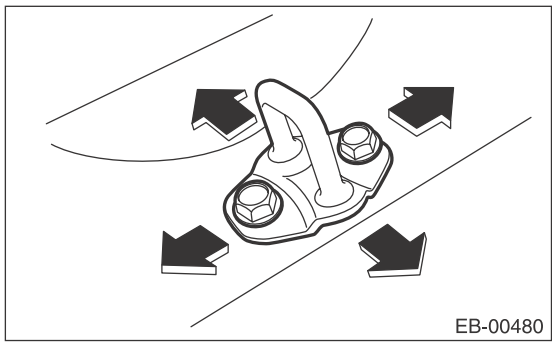

(1) Loosen the bolts.
(2) Tap the striker using a plastic hammer to adjust the surface level gap between rear gate panel and body.

Tightening torque:
25 N·m (2.55 kgf-m, 18.4 ft-lb)

D: DISPOSAL

1. REAR GATE DAMPER STAY

CAUTION:
Gas is colorless, odorless, and harmless. However, gas pressure may spray cutting powder or oil. Be sure to wear dust-resistant goggles.
1) Cover with a vinyl sack as shown in the figure.

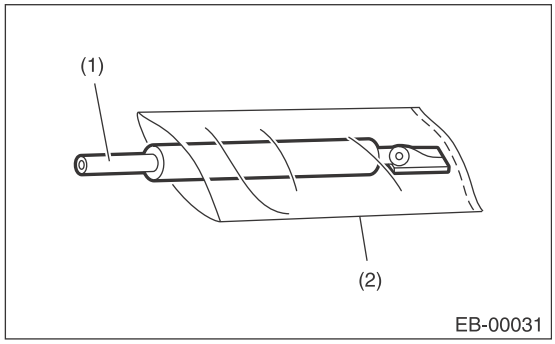

(1) Rear gate damper stay
(2) Vinyl sack

NOTE:
Prevent the vinyl sack from being caught by drill cutting edge.

2) Lift the body side slightly with piston rods fully extended, and secure the body side with vise.
Drill a hole in 2 to 3 mm (0.08 to 0.12 in) diameter at a point 10 to 200 mm (0.39 to 7.87 in) from body side, and bleed the rear gate damper stay gas completely.

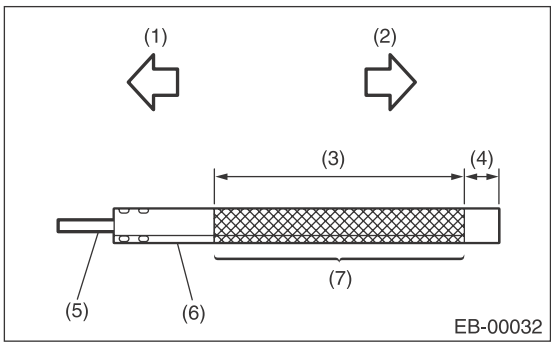

(1) Door side
(2) Body side
(3) 190 mm (7.48 in)
(4) 10 mm (0.39 in)
(5) Piston rod
(6) Cylinder
(7) Portion to be drilled

11.Protector Tape

A: INSTALLATION

Apply the protector tape by the following steps.

1. REAR DOOR PROTECTOR (OUTBACK MODEL)

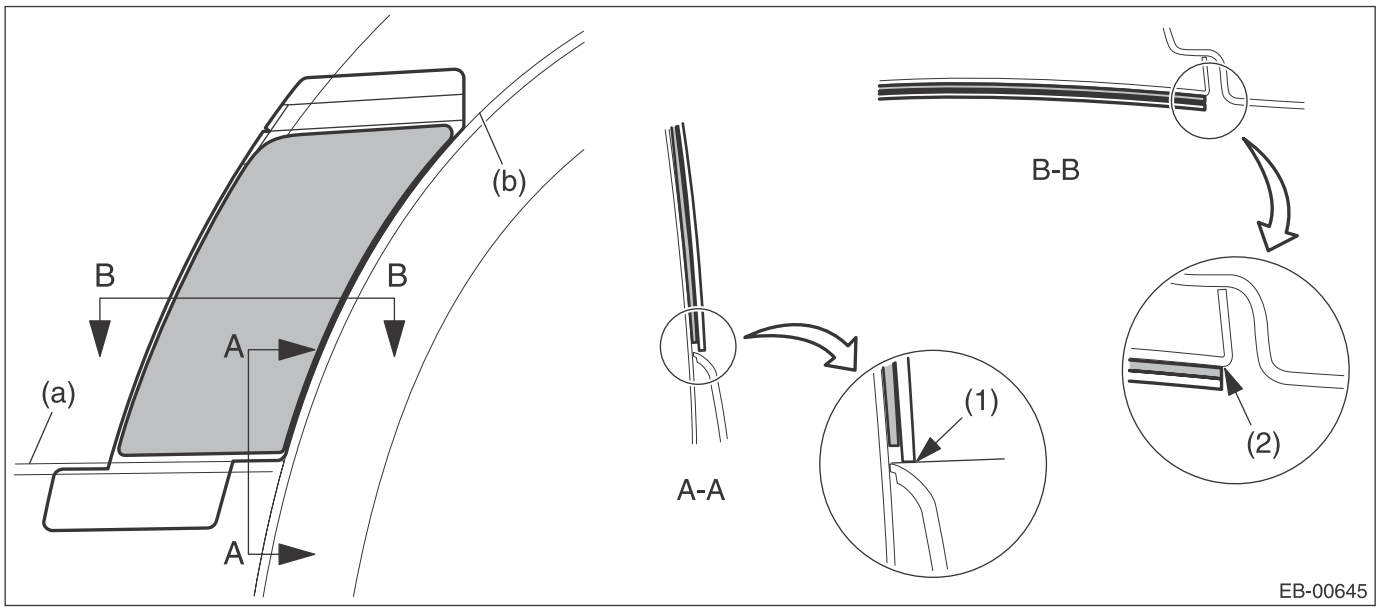

(a)	Rear door garnish end	(b)	Rear door panel end
(1)	Align the application sheet to the end of rear door garnish.	(2)	Align the application sheet to the end of rounded corner.

1) Clean the area around applying position to remove any foreign objects on body.
2) Detach the backing paper and apply the protector tape after positioning it correctly.
3) Detach the backing papers, and moisten the applying area and the backside of protector tape by spraying liquid (mild detergent solution at 3% concentration).
4) Apply the protector tape to the vehicle body.

CAUTION:
Remove the water or air bubbles out of the protector tape by using the plastic or rubber spatula.
5) Detach the application tape and temporary retention tape.

2. REAR QUARTER PROTECTOR

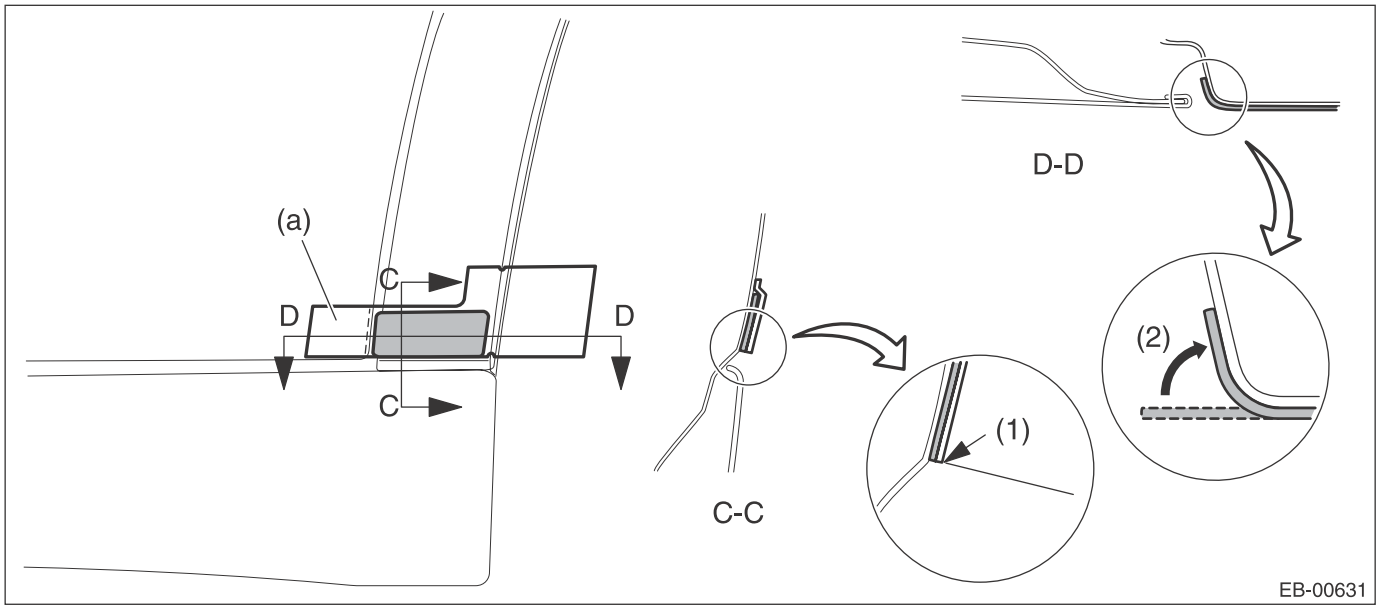

(1) Align the application sheet to the end of rounded corner.
(2) Apply the protector tape along the rounded surface.

1) Clean the area around applying position to remove any foreign objects on body.
2) Detach the backing paper from the temporary retention area (a) and apply the protector tape after positioning it correctly.
3) Detach the backing papers, and moisten the applying area and the backside of protector tape by spraying liquid (mild detergent solution at 3% concentration).
4) Apply the protector tape to the vehicle body.

CAUTION:
Remove the water or air bubbles out of the protector tape by using the plastic or rubber spatula.
5) Detach the application tape and temporary retention tape.
6) Bend the tack-in end and apply it as shown by (2) in the figure.

CRUISE CONTROL SYSTEM

CC

Page

1. General Description 2
2. Relay and Fuse 4
3. Cruise Control System 5
4. Cruise Control Module 6
5. Cruise Control Command Switch 7
6. Combination Meter 11
7. Stop Light & Brake Switch 12
8. Clutch Switch 13
9. Inhibitor Switch 14
10. Transmission Control Module (TCM) 15
11. Neutral Position Switch 16

1. General Description

A: COMPONENT

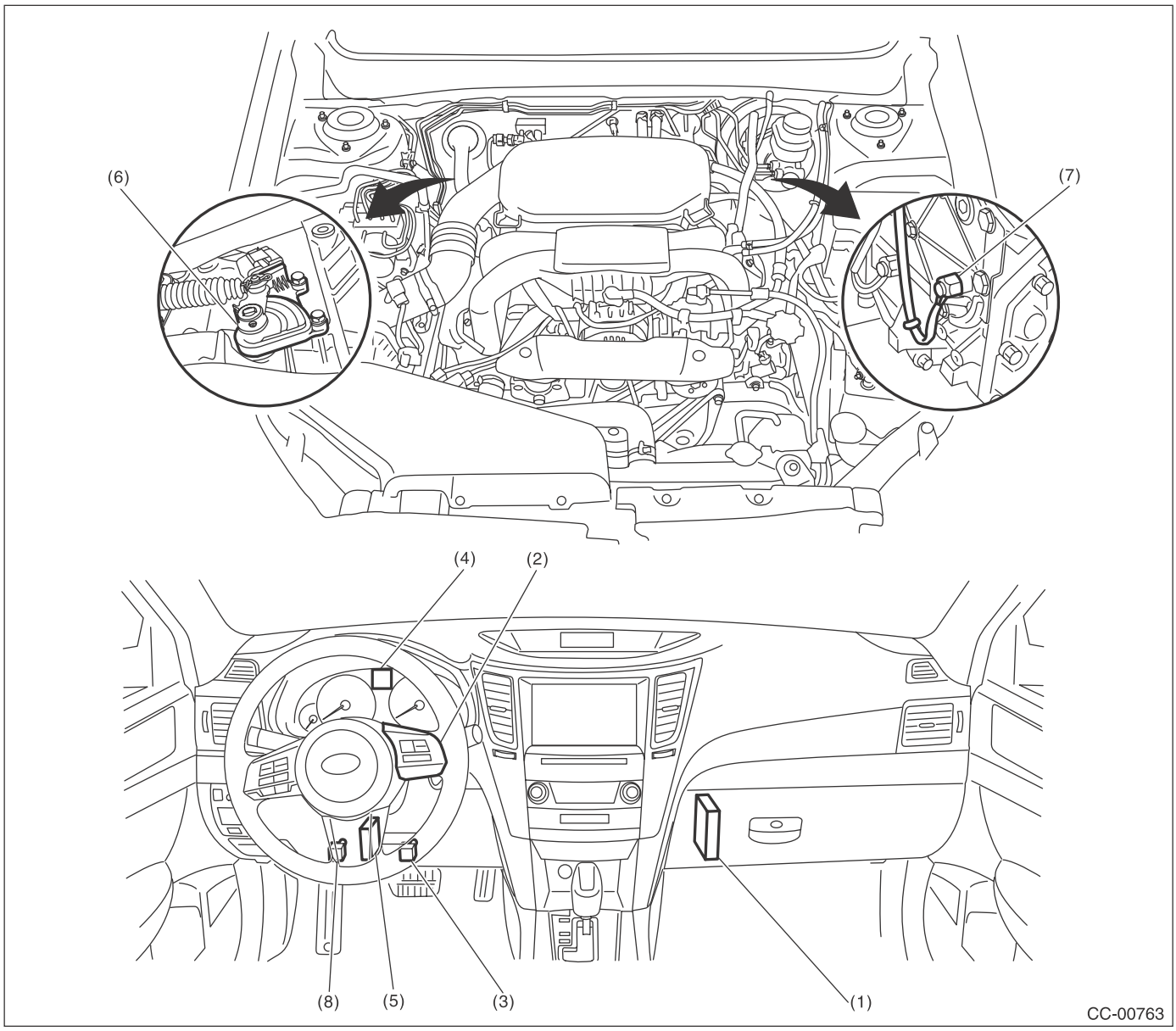

(1) Engine control module (ECM)
(2) Cruise control command switch
(3) Stop light and brake switch
(4) Cruise indicator light and cruise set indicator light
(5) Transmission control module (TCM) (AT and CVT model)
(6) Inhibitor switch (CVT model)
(7) Neutral position switch (MT model)
(8) Clutch switch (MT model)

B: CAUTION

- Before disassembling or reassembling parts, always disconnect the battery ground cable from battery. When repairing the audio, control module, etc. which are provided with memory functions, record the memory contents before disconnecting the ground cable from battery. Otherwise, the memory will be cleared.
- Reassemble the parts in the reverse order of disassembly unless otherwise indicated.
- Adjust the parts to specifications specified in this manual.
- Connect the connectors securely when reassembling.
- After reassembly, make sure that the functional parts operate normally.

C: PREPARATION TOOL

TOOL NAME	REMARKS
Circuit tester	Used for measuring resistance and voltage.
TORX® bit T30	Used for removing/installing driver's airbag module.

2. Relay and Fuse

A: LOCATION

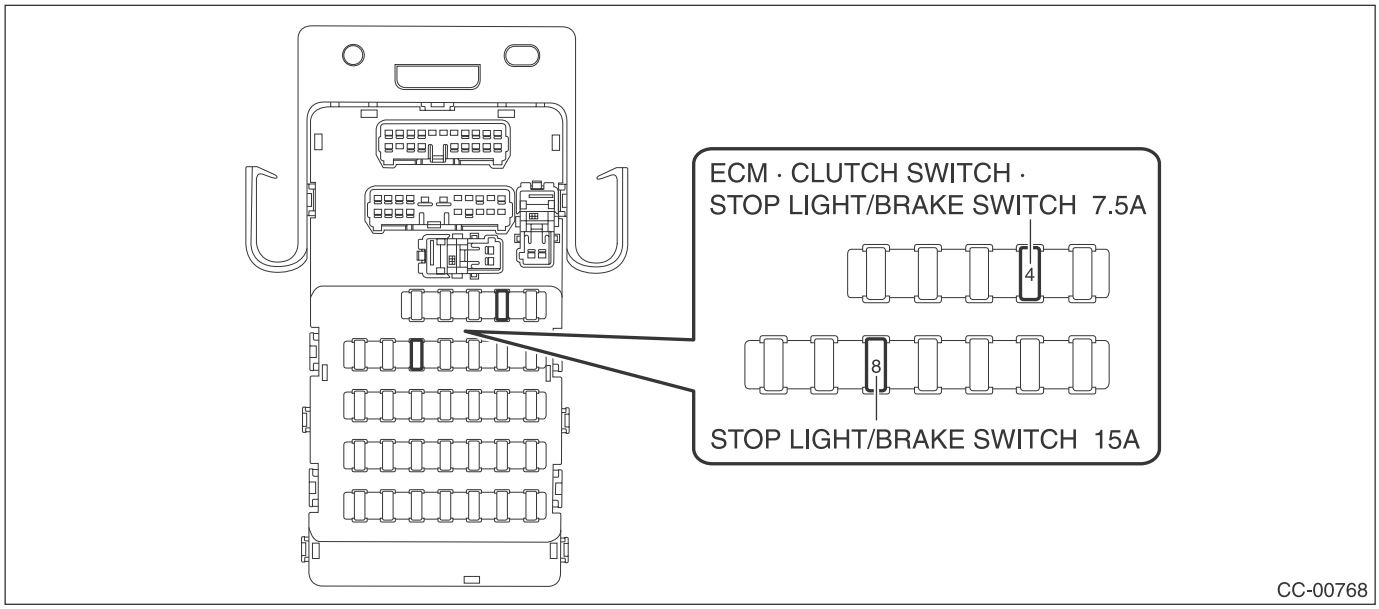

B: INSPECTION

1. CHECK FUSE.

1) Remove the fuse and check visually.
2) If the fuse is blown out, replace the fuse.

3. Cruise Control System

A: WIRING DIAGRAM

Refer to “Cruise Control System” in the wiring diagram. <Ref. to WI-88, WIRING DIAGRAM, Cruise Control System.>

B: INSPECTION

Refer to CRUISE CONTROL SYSTEM (DIAGNOSIS). <Ref. to CC(diag)-11, Diagnostics with Phenomenon.>

C: NOTE

For operation procedures of each component of the cruise control system, refer to the respective section.

- Cruise control unit:<Ref. to CC-6, Cruise Control Module.>
- Cruise control command switch:<Ref. to CC-7, Cruise Control Command Switch.>
- Combination meter:<Ref. to CC-11, Combination Meter.>
- Stop light & brake switch:<Ref. to CC-12, Stop Light & Brake Switch.>
- Clutch switch:<Ref. to CC-13, Clutch Switch.>
- Inhibitor switch:<Ref. to CC-14, Inhibitor Switch.>
- Transmission control module (TCM):<Ref. to CC-15, Transmission Control Module (TCM).>
- Neutral position switch:<Ref. to CC-16, Neutral Position Switch.>

4. Cruise Control Module

A: NOTE

The control of cruise control system is carried out in engine control module (ECM).

B: REMOVAL

- H4 NA model:<Ref. to FU(H4SO)-39, REMOVAL, Engine Control Module (ECM).>
- H4 turbo model:<Ref. to FU(H4DOTC)-57, REMOVAL, Engine Control Module (ECM).>
- H6 model:<Ref. to FU(H6DO)-50, REMOVAL, Engine Control Module (ECM).>

C: INSTALLATION

- H4 NA model:<Ref. to FU(H4SO)-39, INSTALLATION, Engine Control Module (ECM).>
- H4 turbo model:<Ref. to FU(H4DOTC)-57, INSTALLATION, Engine Control Module (ECM).>
- H6 model:<Ref. to FU(H6DO)-50, INSTALLATION, Engine Control Module (ECM).>

5. Cruise Control Command Switch

A: REMOVAL

CAUTION:
Refer to "CAUTION" of "General Description" before handling the airbag module. <Ref. to AB-9, CAUTION, General Description.>

1) Position the front wheels straight ahead. (After moving a vehicle 5 m (16 ft) or more with front wheels positioned straight ahead, make sure that the vehicle moves straight ahead).
2) Turn the ignition switch to OFF.
3) Disconnect the ground cable from battery and wait for at least 60 seconds before starting work.
4) Remove the driver's airbag module assembly.

Preparation tool: TORX® T30

(1) Loosen the TORX® bolts located on the sides of the steering wheel.

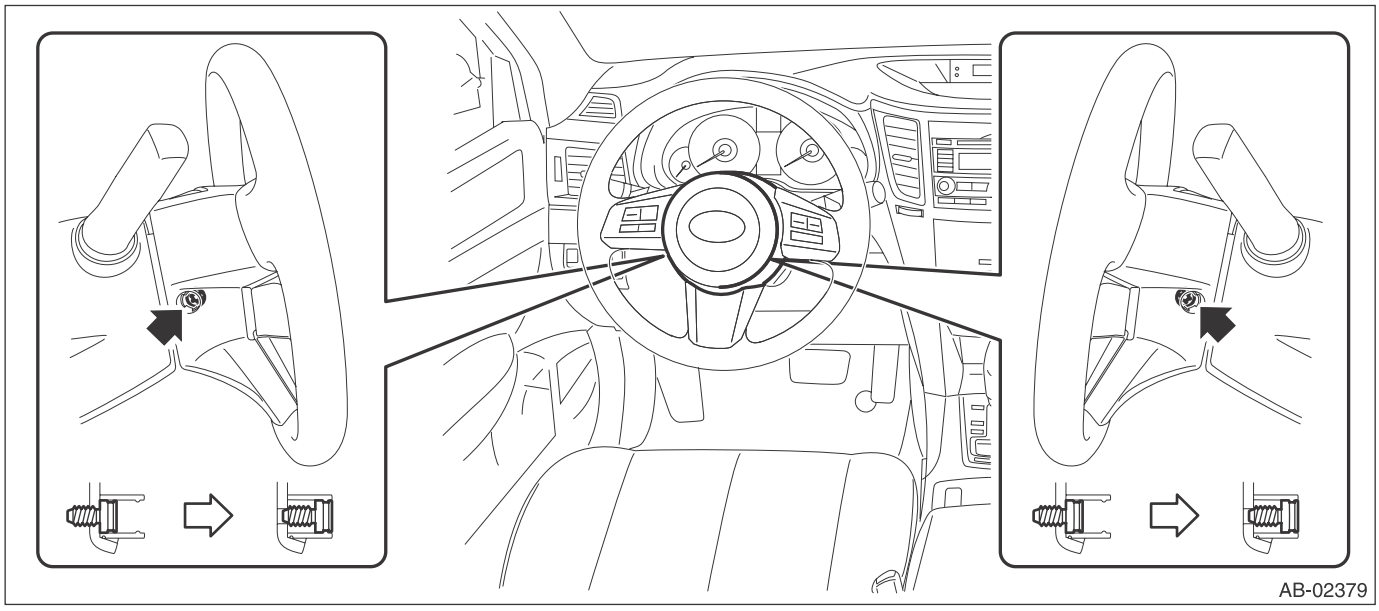

(2) Disconnect the horn harness and airbag connector and remove the airbag module assembly.

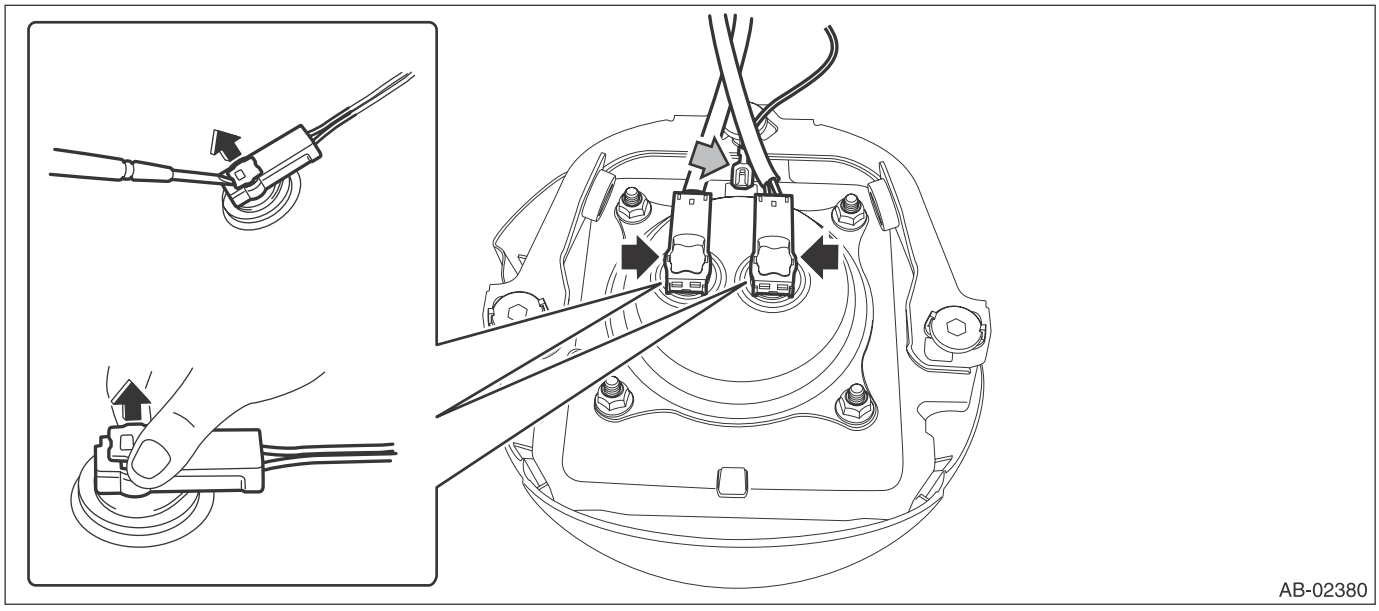

5) Remove the steering wheel.

CAUTION:
If the steering wheel has been removed, make sure that the roll connector is not turned from the original position.

(1) Disconnect the connector and remove the nut.
(2) Put alignment marks and remove the steering wheel using a steering puller.

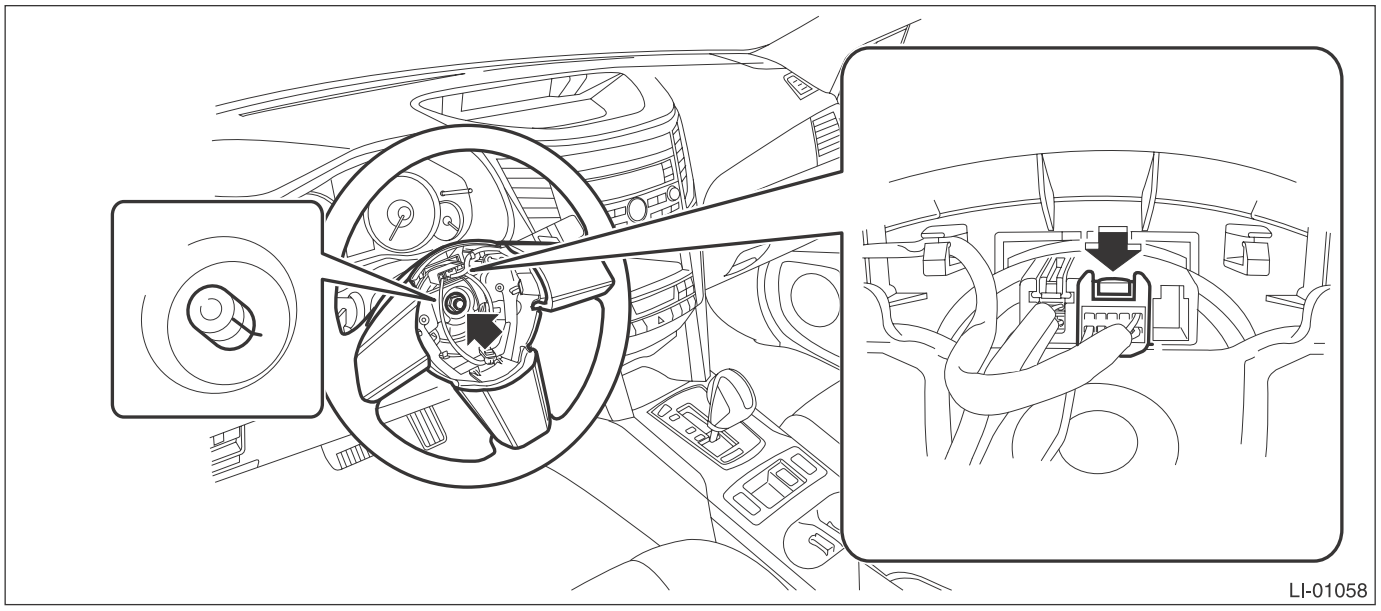

6) Remove the clutch control command switches.

(1) Remove the screw, disconnect the connector and remove the paddle shift switch. (Model with paddle shift)

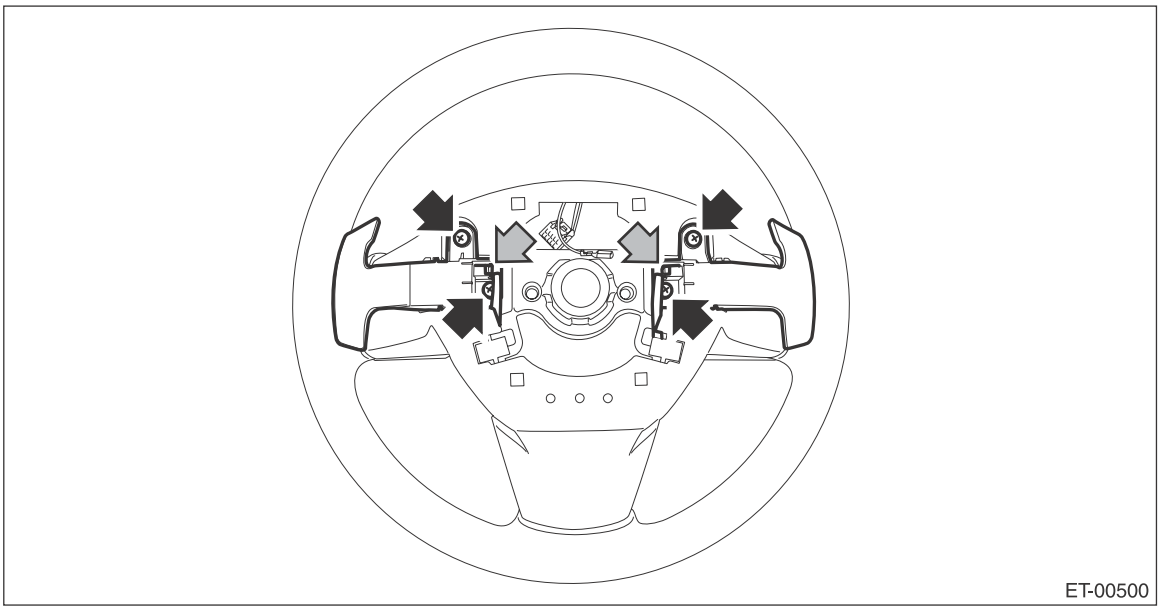

(2) Disconnect the claws and then remove the lower cover.

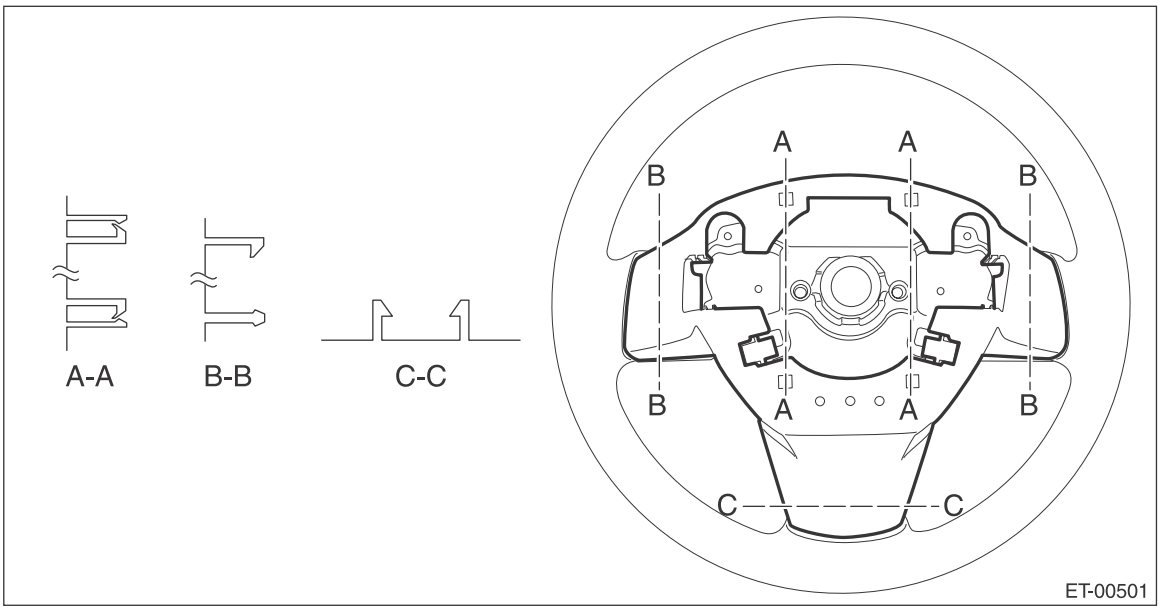

(3) Remove the screw to remove the cruise control command switch.

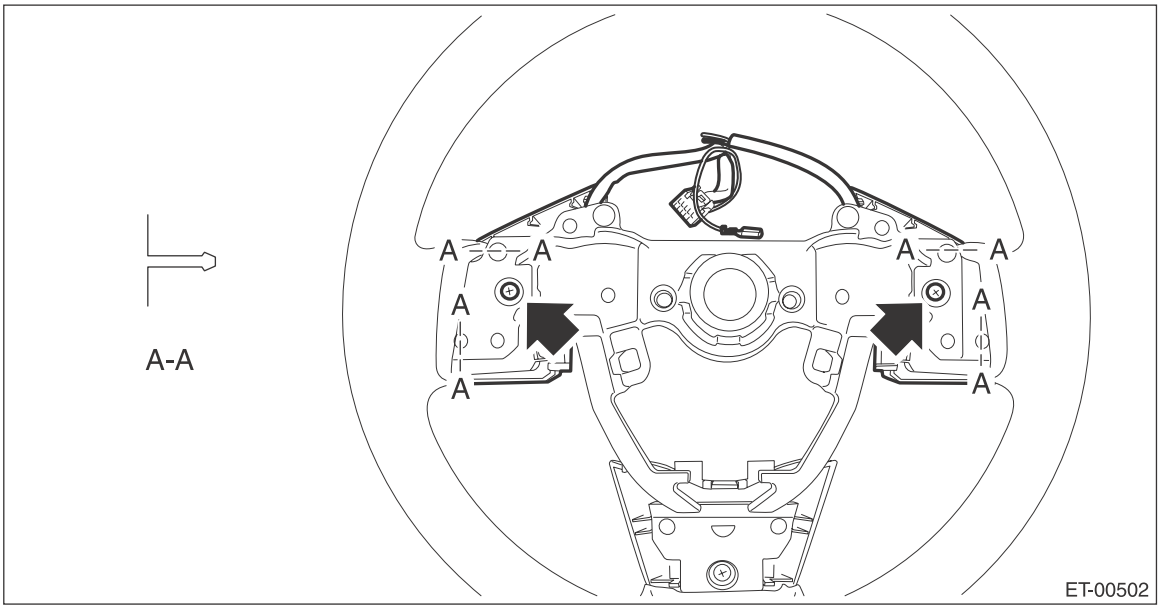

B: INSTALLATION

CAUTION:

- **Refer to "CAUTION" of "General Description" before handling the airbag module. <Ref. to AB-9, CAUTION, General Description.>**
- **Do not allow harness and connectors to interfere or get tangled up with other parts.**

1) Align the center position of the roll connector. <Ref. to AB-93, ADJUSTMENT, Roll Connector.>
2) Align the alignment marks on the steering wheel and steering shaft.
3) Install each part in the reverse order of removal.

Tightening torque:

Airbag module: 10 N·m (1.0 kgf-m, 7.4 ft-lb)
Steering wheel: 39 N·m (4.0 kgf-m, 28.8 ft-lb)
Clearance between column cover and steering wheel: 2 — 4 mm (0.08 — 0.16 in)

C: INSPECTION

1) Disconnect the cruise control command switch connector.
2) Check the resistance between cruise control command switch terminals.

Preparation tool: Circuit tester

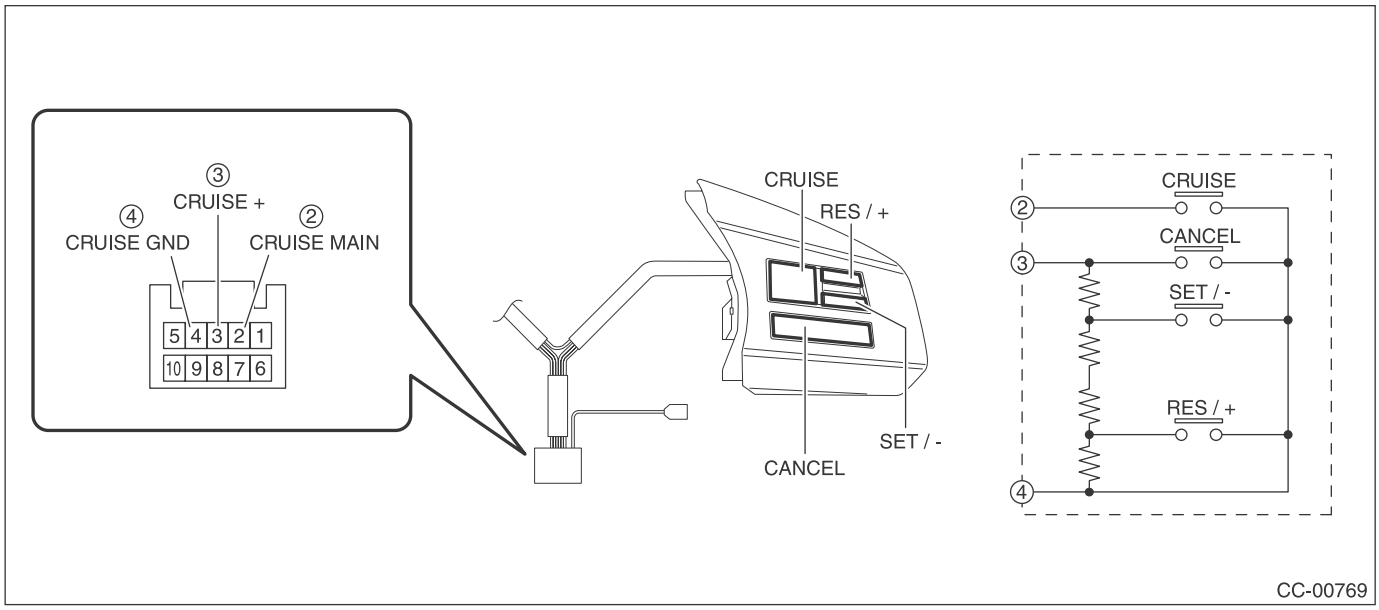

Terminal No.	Inspection conditions		Standard
3 — 4	CANCEL SET/– RES/+	All OFF	Approx. 4 kΩ
3 — 4	CANCEL	ON	Less than 1 Ω
3 — 4	SET/–	ON	Approx. 250 Ω
3 — 4	RES/+	ON	Approx. 1470 Ω
2 — 4	CRUISE (MAIN)	OFF	1 MΩ or more
2 — 4		ON	Less than 1 Ω

3) Replace the cruise control command switch if it is found defective.

6. Combination Meter

A: NOTE

For combination meter, refer to the “IDI”. <Ref. to IDI-20, Combination Meter.>

7. Stop Light & Brake Switch

A: NOTE

For stop light & brake switch, refer to “BR”. <Ref. to BR-41, INSPECTION, Stop Light Switch.>

8. Clutch Switch

A: NOTE

For clutch switch, refer to “CL”. <Ref. to CL-31, Clutch Switch.>

9. Inhibitor Switch

A: NOTE

1. CVT MODEL

For inhibitor switch, refer to “Continuously Variable Transmission”. <Ref. to CVT-94, Inhibitor Switch.>

2. 5AT MODEL

Inhibitor switch cannot be removed and checked, because the inhibitor switch is installed on control valve assembly.
When a malfunction occurs, refer to 5AT (diag) section. <Ref. to 5AT(diag)-36, DTC P0705 TRANSMISSION RANGE SENSOR CIRCUIT (PRNDL INPUT), Diagnostic Procedure with Diagnostic Trouble Code (DTC).>

10. Transmission Control Module (TCM)

A: NOTE

For transmission control module (TCM), refer to following section.

- CVT model:<Ref. to CVT-122, Transmission Control Module (TCM).>
- 5AT model:<Ref. to 5AT-58, Transmission Control Module (TCM).>

11.Neutral Position Switch

A: NOTE

For neutral position switch, refer to the manual transmission & differential section. <Ref. to 6MT-36, Switches and Harness.>

CRUISE CONTROL SYSTEM (DIAGNOSTICS)

CC(diag)

		Page
1.	Basic Diagnostic Procedure	2
2.	General Description	5
3.	Electrical Component Location	6
4.	Engine Control Module (ECM) I/O Signal	7
5.	Subaru Select Monitor	8
6.	Read Cancel Code	9
7.	Real-time Diagnosis	10
8.	Diagnostics with Phenomenon	11
9.	List of Cancel Code	13
10.	Diagnostic Procedure with Cancel Code	16

1. Basic Diagnostic Procedure

A: PROCEDURE

CAUTION:
• When performing diagnosis, observe the legal speed limit on the road.
• The cancel code will also appear when cruise control is cancelled by the driver's operation. Do not confuse them.
• Be sure to get an assistant to support the diagnosis while driving, and have him/her operate the select monitor.

	Step	Check	Yes	No
1	**CHECK MALFUNCTION INDICATOR LIGHT.** Make sure the malfunction indicator light illuminates.	Does the malfunction indicator light illuminate?	Go to step **5**.	Go to step **2**.
2	**CHECK CRUISE INDICATOR LIGHT.** Make sure the cruise indicator light blinks.	Does the cruise indicator light blink?	Go to step **7**.	Go to step **3**.
3	**CHECK CRUISE SWITCH OPERATION.** Check the CRUISE switch operation. (Check the illumination of the CRUISE indicator.)	Is the CRUISE switch turned on? (Does the CRUISE indicator illuminate?)	Go to step **4**.	Go to phenomenon 1. <Ref. to CC(diag)-11, DIAGNOSTIC PROCEDURE WITH PHENOMENON, Diagnostics with Phenomenon.>
4	**CHECK CRUISE CONTROL SET OPERATION.** Check the cruise control setting operation.	Can the cruise control be set while driving at 40 km/h (25 MPH) or more?	Go to step **8**.	Go to step **7**.
5	**CHECK DTC.** Read all DTCs using the Subaru Select Monitor.	Is an engine or ABS/VDC related DTC displayed?	Record the DTC. Go to step **6**.	Go to phenomenon 2. <Ref. to CC(diag)-11, DIAGNOSTIC PROCEDURE WITH PHENOMENON, Diagnostics with Phenomenon.>
6	**CHECK FREEZE FRAME DATA.** Using the Subaru Select Monitor, check the Freeze Frame Data or Information in Trouble State.	Was the Freeze Frame Data or Information in Trouble State recorded?	Record the data. Perform the diagnosis according to DTC related to engine or ABS/VDC.	Perform the diagnosis according to DTC related to engine or ABS/VDC.
7	**CHECK CANCEL CODE.** Using the Subaru Select Monitor, read the cancel codes. NOTE: • Do not turn the ignition switch to OFF after the cruise control is deactivated. • Do not operate the cruise control command switch after the cruise control is deactivated. If the above is performed, the cancel code will be cleared.	Is it possible to read the cancel codes?	Perform the diagnosis according to the cancel code. <Ref. to CC(diag)-13, LIST, List of Cancel Code.>	Go to step **8**.

	Step	Check	Yes	No
8	**CHECK SET INDICATOR.** Check the illumination of the SET indicator.	Does the SET indicator illuminate?	Go to step **9**.	Go to phenomenon 3. <Ref. to CC(diag)-11, DIAGNOSTIC PROCEDURE WITH PHENOMENON, Diagnostics with Phenomenon.>
9	**CHECK VEHICLE SPEED IS HELD WITHIN SET SPEED.** Make sure the vehicle speed is held within set speed.	Is the vehicle speed kept within setting speed ±3 km/h (±2 MPH)? (Make sure that on a level road.)	Go to step **10**.	Go to phenomenon 4. <Ref. to CC(diag)-11, DIAGNOSTIC PROCEDURE WITH PHENOMENON, Diagnostics with Phenomenon.>
10	**CHECK RES/+ OPERATION.** Check the RES/+ switch operation.	Does the vehicle speed increase or return to set speed after RES/+ switch has been pressed?	Go to step **11**.	Go to phenomenon 5. <Ref. to CC(diag)-11, DIAGNOSTIC PROCEDURE WITH PHENOMENON, Diagnostics with Phenomenon.>
11	**CHECK SET/– OPERATION.** Check the SET/– switch operation.	Does the vehicle speed decrease after SET/– switch has been pressed?	Go to step **12**.	Go to phenomenon 6. <Ref. to CC(diag)-11, DIAGNOSTIC PROCEDURE WITH PHENOMENON, Diagnostics with Phenomenon.>
12	**CANCEL OPERATION CHECK.** Check the CANCEL switch operation.	Is the cruise control released after CANCEL switch has been pressed?	Go to step **13**.	Go to phenomenon 7. <Ref. to CC(diag)-11, DIAGNOSTIC PROCEDURE WITH PHENOMENON, Diagnostics with Phenomenon.>
13	**CHECK CRUISE CONTROL RELEASE OPERATION.** Check the cruise control release operation.	Is the cruise control released after brake pedal has been depressed?	Go to step **14**.	Go to phenomenon 8. <Ref. to CC(diag)-11, DIAGNOSTIC PROCEDURE WITH PHENOMENON, Diagnostics with Phenomenon.>

	Step	Check	Yes	No
14	**CHECK CRUISE CONTROL RELEASE OPERATION.** Check the cruise control release operation.	Is the cruise control released after shifting to the neutral position?	Go to step **15**.	Go to phenomenon 9. <Ref. to CC(diag)-11, DIAGNOSTIC PROCEDURE WITH PHENOMENON, Diagnostics with Phenomenon.>
15	**CHECK CRUISE CONTROL RELEASE OPERATION.** Check the cruise control release operation.	Is the cruise control released after depressing the clutch pedal?	Finish the diagnosis.	Go to phenomenon 10. <Ref. to CC(diag)-11, DIAGNOSTIC PROCEDURE WITH PHENOMENON, Diagnostics with Phenomenon.>

2. General Description

A: CAUTION

Airbag system wiring harness is routed near the cruise control command switch.

CAUTION:
• Do not use the electrical test equipment on the airbag system wiring harnesses and connector circuits.
• Be careful not to damage the airbag system wiring harness when servicing the cruise control command switch. Airbag system wiring harness is routed near the cruise control command switch.

B: PREPARATION TOOL

1. SPECIAL TOOL

ILLUSTRATION	TOOL NUMBER	DESCRIPTION	REMARKS
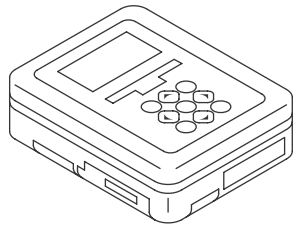 ST1B022XU0	1B022XU0	SUBARU SELECT MONITOR III KIT	Used for troubleshooting the electrical system.

2. GENERAL TOOL

TOOL NAME	REMARKS
Circuit tester	Used for measuring resistance, voltage and current.

C: INSPECTION

Measure the battery voltage and specific gravity of electrolyte.

Standard voltage:
12 V or more

Specific gravity:
1.260 or more

3. Electrical Component Location

A: LOCATION

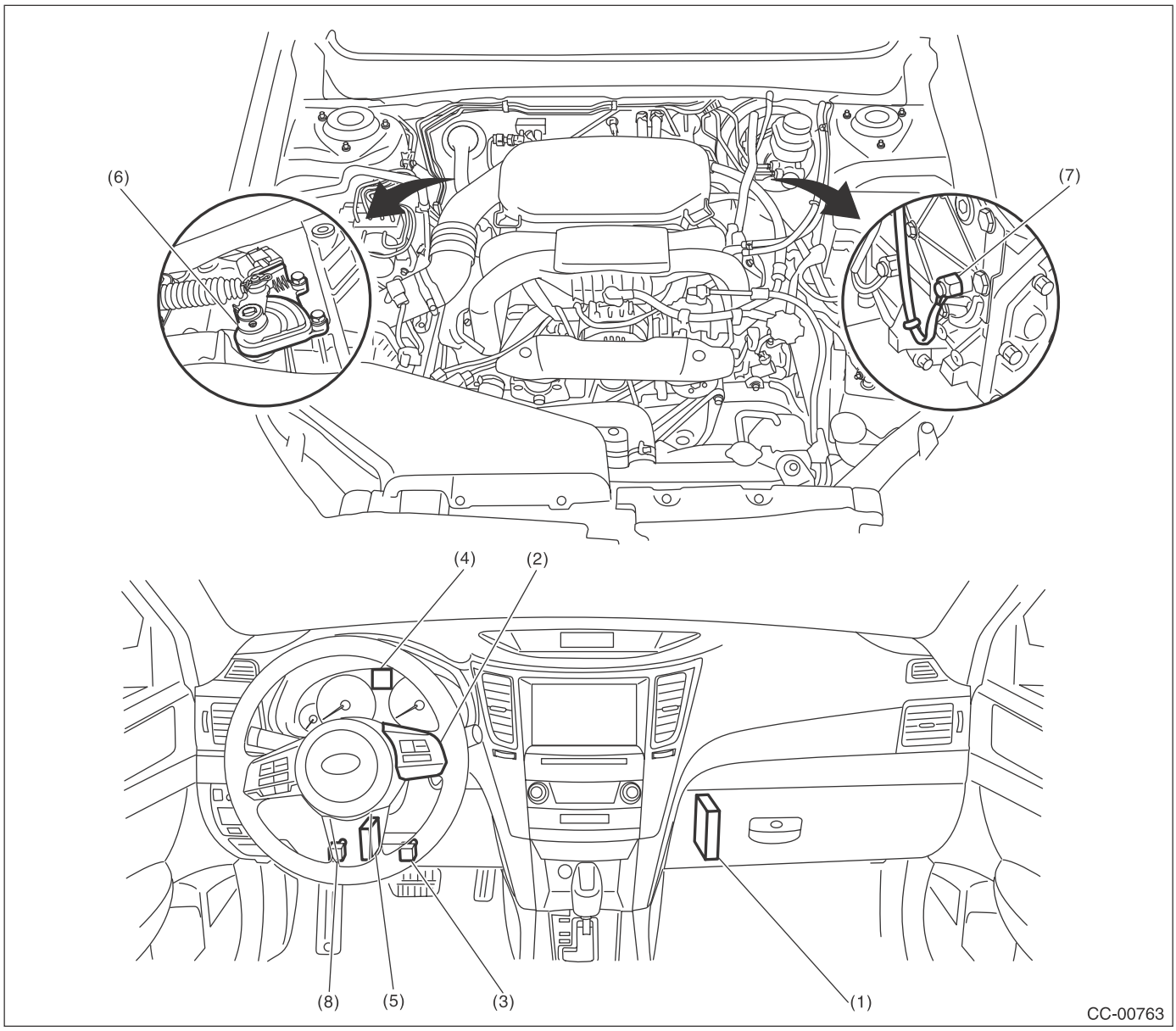

(1)	Engine control module (ECM)	(4)	Cruise indicator light and cruise set indicator light	(7)	Neutral position switch (MT model)
(2)	Cruise control command switch	(5)	Transmission control module (TCM) (AT model and CVT model)	(8)	Clutch switch (MT model)
(3)	Stop light & brake switch	(6)	Inhibitor switch (CVT model)		

4. Engine Control Module (ECM) I/O Signal

A: ELECTRICAL SPECIFICATION

For details on the input/output signals for the engine control module, refer to ENGINE (DIAGNOSTICS). <Ref. to EN(H4SO)(diag)-18, ELECTRICAL SPECIFICATION, Engine Control Module (ECM) I/O Signal.> <Ref. to EN(H4DOTC)(diag)-19, ELECTRICAL SPECIFICATION, Engine Control Module (ECM) I/O Signal.> <Ref. to EN(H6DO)(diag)-18, ELECTRICAL SPECIFICATION, Engine Control Module (ECM) I/O Signal.>

B: WIRING DIAGRAM

<Ref. to WI-88, WIRING DIAGRAM, Cruise Control System.>

5. Subaru Select Monitor

A: OPERATION

1. GENERAL DESCRIPTION

The on-board diagnosis function of the cruise control system uses Subaru Select Monitor.
The on-board diagnosis function operates in two categories, which are used depending on the type of problems;
1) Cruise Control Cancel Conditions Diagnosis:
(1) This category of diagnosis requires actual vehicle driving in order to determine the cause, as when cruise speed is cancelled during driving although cruise cancel condition is not entered.
(2) Cruise control memory in ECM stores the cancel code which occurred during driving. When there are multiple cancel code, they are shown on the Subaru Select Monitor.

CAUTION:
• The cruise control memory stores not only the cruise "cancel" which occurred (although "cancel" operation is not entered by the driver), but also the "cancel" condition input by the driver.
• The content of the latest memory (the latest code) is cleared when the ignition switch is turned to OFF. However, memory contents set by the diagnosis of faulty switches related to the system and cruise control will remain as trouble history (memory code) after the ignition switch is turned to OFF.
2) Real-time Diagnosis:
Real-time diagnosis function is used to determine whether or not the input signal system is in good order, according to signal emitted from switches, sensors, etc.
(1) Vehicle cannot be driven at cruise speed when the problem occurs in the cruise control system or relevant circuits.
(2) Monitor the signal conditions from switches and sensors.

2. BASIC OPERATION

For the operation procedure, refer to the "PC application help for Subaru Select Monitor".

6. Read Cancel Code

A: OPERATION

1) On «Main Menu» display, select {Each System Check}.
On «System Selection Menu» display, select {Engine Control System} and select the [OK]. Select [OK] after the engine type information is displayed.
2) Drive vehicle at 40 km/h (25 MPH) or more and set the cruise control.

CAUTION:
• When performing diagnosis, observe the legal speed limit on the road.
• The cancel code will also appear when cruise control is cancelled by the driver's operation. Do not confuse them.
• Be sure to get an assistant to support the diagnosis while driving, and have him/her operate the select monitor.
3) When the set speed is cancelled by itself (without any cancel operations such as applying brake) or when the cruise control could not be set by performing the setting operation, selecting the {Cancel Code(s) Display} on the engine malfunction diagnosis screen will display the cancel code on the select monitor display.

NOTE:
The {Latest Diagnostic Code(s)} and {Memorized Diagnostic Code(s)} are contained in the cancel code. The latest code recognized during current test drive is displayed in {Latest Diagnostic Code(s)}. Cancel codes resulting from fault diagnosis of switches relating to the system and cruise control are also displayed in {Memorized Diagnostic Code(s)}.
4) Perform engine DTC clear memory operation. <Ref. to EN(H4SO)(diag)-54, OPERATION, Clear Memory Mode.> <Ref. to EN(H4DOTC)(diag)-55, OPERATION, Clear Memory Mode.> <Ref. to EN(H6DO)(diag)-57, OPERATION, Clear Memory Mode.>
Cancel code of switches relating to the system and cruise control are deleted by clearing memory on the engine side.

NOTE:
• The latest code will be cleared by turning ignition switch to OFF.
• For detailed operation procedures, refer to "PC application help for Subaru Select Monitor".
• For details on cancel codes, refer to List of Cancel Code. <Ref. to CC(diag)-13, List of Cancel Code.>

7. Real-time Diagnosis

A: OPERATION

1) Select {Current Data Display & Save} in «Engine Diagnosis» display screen.
2) Make sure that normal display is shown when operated as follows:
- Depress and release the brake pedal. (Stop light switch and brake switch are turned to ON.)
- Turn the “CRUISE” switch to ON.
- Turn the “CANCEL” switch to ON.
- Turn the “SET/COAST” switch to ON.
- Turn the “RESUME/ACCEL” switch to ON.
- Depress or release the clutch switch.
- Place the shift lever in any position other than neutral.

NOTE:
For detailed operation procedures, refer to “PC application help for Subaru Select Monitor”.

8. Diagnostics with Phenomenon

A: DIAGNOSTIC PROCEDURE WITH PHENOMENON

Phenomenon		Check item	Reference
1	CRUISE switch is not turned ON. (CRUISE indicator does not illuminate.) Or the cruise control is cancelled without CRUISE switch operation.	(1) Perform cruise cancel conditions diagnosis.	Perform the diagnosis according to displayed cancel code.
		(2) Perform the real-time diagnosis.	Check the input signal of cruise control system.
		(3) Check the cruise control command switch.	<Ref. to CC(diag)-16, 11, Diagnostic Procedure with Cancel Code.>
		(4) Check the CRUISE indicator.	<Ref. to CC(diag)-12, CHECK CRUISE INDICATOR LIGHT AND CRUISE SET INDICATOR LIGHT, Diagnostics with Phenomenon.>
2	Cruise control cannot be set. Or the cruise control is cancelled without canceling operation.	(1) Perform cruise cancel conditions diagnosis.	Perform the diagnosis according to displayed cancel code.
		(2) Perform the real-time diagnosis.	Check the input signal of cruise control system.
		(3) Check the cruise control command switch.	<Ref. to CC(diag)-16, 11, Diagnostic Procedure with Cancel Code.>
		(4) Check stop light switch and brake switch.	<Ref. to BR-41, Stop Light Switch.> <Ref. to CC(diag)-18, 12, Diagnostic Procedure with Cancel Code.>
		(5) Check clutch switch.	<Ref. to CL-31, Clutch Switch.> <Ref. to CC(diag)-20, 13, Diagnostic Procedure with Cancel Code.>
		(6) Check the neutral position switch.	<Ref. to CC(diag)-21, 14, Diagnostic Procedure with Cancel Code.> <Ref. to CC(diag)-26, 62, Diagnostic Procedure with Cancel Code.>
		(7) Check vehicle speed sensor.	<Ref. to CC(diag)-25, 22, Diagnostic Procedure with Cancel Code.>
3	SET indicator does not illuminate.	Check the SET indicator.	<Ref. to CC(diag)-12, CHECK CRUISE INDICATOR LIGHT AND CRUISE SET INDICATOR LIGHT, Diagnostics with Phenomenon.>
4	Vehicle speed is not held within set speed ±3 km/h (±2 MPH).	Check the vehicle speed sensor.	<Ref. to CC(diag)-25, 22, Diagnostic Procedure with Cancel Code.>
5	Vehicle speed does not increase or does not return to set speed after RES/+ switch has been pressed.	(1) Perform the real-time diagnosis.	Check the input signal of cruise control system.
		(2) Check the RES/+ switch.	<Ref. to CC(diag)-16, 11, Diagnostic Procedure with Cancel Code.>
6	Vehicle speed does not decrease after SET/– switch has been pressed.	(1) Perform the real-time diagnosis.	Check the input signal of cruise control system.
		(2) Check the SET/– switch.	<Ref. to CC(diag)-16, 11, Diagnostic Procedure with Cancel Code.>
7	Cruise control is not released after CANCEL switch has been pressed.	(1) Perform the real-time diagnosis.	Check the input signal of cruise control system.
		(2) Check the CANCEL switch.	<Ref. to CC(diag)-16, 11, Diagnostic Procedure with Cancel Code.>
8	Cruise control is not released after brake pedal has been depressed.	(1) Perform the real-time diagnosis.	Check the input signal of cruise control system.
		(2) Check stop light switch and brake switch.	<Ref. to CC(diag)-18, 12, Diagnostic Procedure with Cancel Code.> <Ref. to BR-41, INSTALLATION, Stop Light Switch.>
9	Cruise control is not released after shifting to the neutral position.	(1) Perform the real-time diagnosis.	Check the input signal of cruise control system.
		(2) Check the neutral position switch.	<Ref. to CC(diag)-21, 14, Diagnostic Procedure with Cancel Code.> <Ref. to CC-16, Neutral Position Switch.>

Phenomenon		Check item	Reference
10	Cruise control is not released after clutch pedal has been depressed.	(1) Perform the real-time diagnosis.	Check the input signal of cruise control system.
		(2) Check clutch switch.	<Ref. to CC(diag)-20, 13, Diagnostic Procedure with Cancel Code.> <Ref. to CL-31, CLUTCH SWITCH, INSTALLATION, Clutch Switch.>

B: CHECK CRUISE INDICATOR LIGHT AND CRUISE SET INDICATOR LIGHT

TROUBLE SYMPTOM:

Cruise control can be set, but the CRUISE indicator and SET indicator do not illuminate.

Step		Check	Yes	No
1	**CHECK CRUISE & SET INDICATORS.** Check the combination meter. <Ref. to IDI-6, OPERATION, Combination Meter System.>	Do the CRUISE & SET indicators illuminate?	Go to step **2**.	Replace the meter case assembly. <Ref. to IDI-20, Combination Meter.>
2	**CHECK LAN SYSTEM.** Perform the diagnosis for LAN system. <Ref. to LAN(diag)-2, Basic Diagnostic Procedure.>	Is a DTC of the LAN system detected?	Perform the diagnosis according to DTC for LAN system.	Replace the ECM. <Ref. to FU(H4DOTC)-57, Engine Control Module (ECM).>

9. List of Cancel Code

A: LIST

NOTE:
- The cancel code is registered even when cancel is performed intentionally by the driver.
- Cancel codes are cleared if the ignition switch is turned to OFF.
- If a different cancel code is input after a cancel code (latest code) has been input, the latest code is overwritten.
- If the cruise indicator light is flashing, a malfunction is occurring in the system or cruise control related switch. The cancel code at this time is saved even after ignition switch is OFF as a memory code of a past malfunction.
- To display a cancel code, use the Subaru Select Monitor to read the code after the cruise control is deactivated during a driving test.

Cancel code	Item	Contents of diagnosis	Reference
11	Main Switch	CRUISE switch of cruise control command switch is turned to OFF, and then the cruise control is released.	This code is displayed without operating the CRUISE switch. <Ref. to CC(diag)-16, 11, Diagnostic Procedure with Cancel Code.>
12	Stop Light & Brake Switch	Stop light switch or brake switch is turned to ON, and then the cruise control is released.	This code is displayed without depressing the brake pedal. <Ref. to CC(diag)-18, 12, Diagnostic Procedure with Cancel Code.>
13	Clutch Switch	Clutch switch is turned to ON, and then the cruise control is released.	This code is displayed without depressing the clutch pedal. <Ref. to CC(diag)-20, 13, Diagnostic Procedure with Cancel Code.>
14	Neutral Position Switch	Neutral position switch is turned to ON, and then the cruise control is released.	This code is displayed without shifting to neutral position. <Ref. to CC(diag)-21, 14, Diagnostic Procedure with Cancel Code.>
15	Cancel Switch	Cancel switch is turned to ON, and then the cruise control is released.	This code is displayed without operating the cancel switch. <Ref. to CC(diag)-23, 15, Diagnostic Procedure with Cancel Code.>
16	Ignition switch	Ignition switch is turned to OFF, and then the cruise control is released.	This code is displayed without operating the ignition switch. <Ref. to CC(diag)-24, 16, Diagnostic Procedure with Cancel Code.>

List of Cancel Code

Cancel code	Item	Contents of diagnosis	Reference
21	Cruise control switch malfunction when ignition switch is turned to ON	When the ignition switch is turned to ON, each switch of cruise control command switch is already turned to ON.	This code is displayed when the ignition switch is turned to ON without operating the cruise control command switch. <Ref. to CC(diag)-24, 21, Diagnostic Procedure with Cancel Code.>
22	Abnormality of change in vehicle speed	Malfunction of vehicle speed signal variation is detected.	<Ref. to CC(diag)-25, 22, Diagnostic Procedure with Cancel Code.>
24	Abnormality of switches related to cruise control	Open circuit of the cruise control switch is detected during cruise driving. (The system is judged as model without cruise control.)	This code is displayed with normal operation. <Ref. to CC(diag)-25, 24, Diagnostic Procedure with Cancel Code.>
25	Abnormality of input circuit for Brake switch	Malfunction of brake switch input circuit in ECM is detected.	<Ref. to CC(diag)-25, 25, Diagnostic Procedure with Cancel Code.>
31	Abnormal engine speed Signal	• Abnormal increase of engine speed is detected. • Gear is placed in Neutral, 1st or Reverse position.	Cruise in 2nd shift position or more. <Ref. to CC(diag)-25, 31, Diagnostic Procedure with Cancel Code.>
32	Cruse Control out of Range	• Controlled vehicle speed decreased under the limit during cruising. • Set operation was performed at vehicle speed unavailable for setting. • RESUME operation was performed without memorized vehicle speed.	This code is displayed, though the vehicle speed is increased to the speed available for cruise set and set operation was performed again. <Ref. to CC(diag)-25, 32, Diagnostic Procedure with Cancel Code.>
34	Prohibition of cruise control at continuing big Accel. angle	The vehicle has been driven at higher speed than set vehicle speed for an abnormally long time (approximately 10 minutes) during cruise driving.	This code is displayed when driving for a long period of time at higher speed than appropriate cruise set vehicle speed by operating accelerator pedal. In this case, the cruise setting is deactivated. <Ref. to CC(diag)-26, 34, Diagnostic Procedure with Cancel Code.>
35	Prohibition of cruise control at vehicle speed F/B malfunction	Set vehicle speed cannot be kept because of some reasons (steep uphill, parking brake, abnormal decrease of engine output, etc.) during cruise driving.	This code is displayed when driving condition is not suitable for cruise control. Perform cruise set operation again after clearing the possible cause. <Ref. to CC(diag)-26, 35, Diagnostic Procedure with Cancel Code.>

List of Cancel Code

Cancel code	Item	Contents of diagnosis	Reference
41	VDC/TCS Operating	Vehicle dynamics control (VDC) or TCS is operated during cruise driving or cruise setting.	This code is displayed when driving condition is not suitable for cruise control. Perform cruise set operation again after clearing the possible cause. <Ref. to CC(diag)-26, 41, Diagnostic Procedure with Cancel Code.>
43	ABS/VDC Failure	ABS or Vehicle dynamics control (VDC) system malfunction is detected during cruise driving or cruise setting.	<Ref. to CC(diag)-26, 43, Diagnostic Procedure with Cancel Code.>
44	Body Integrated unit Failure	Body integrated unit system malfunction is detected during cruise driving or cruise setting.	<Ref. to CC(diag)-26, 44, Diagnostic Procedure with Cancel Code.>
45	Meter Failure	Combination meter malfunction is detected during cruise driving or cruise setting.	<Ref. to CC(diag)-26, 45, Diagnostic Procedure with Cancel Code.>
49	TCM Failure	Transmission control module (TCM) malfunction is detected during cruise driving or cruise setting.	<Ref. to CC(diag)-26, 49, Diagnostic Procedure with Cancel Code.>
61	Brake switch abnormal	Malfunction in the stop light & brake switch is detected.	<Ref. to CC(diag)-26, 61, Diagnostic Procedure with Cancel Code.>
62	Neutral Switch Failure	Neutral position switch malfunction is detected.	<Ref. to CC(diag)-26, 62, Diagnostic Procedure with Cancel Code.>
63	Abnormality 1 of change in vehicle speed	Malfunction of vehicle speed signal variation is detected.	<Ref. to CC(diag)-27, 63, Diagnostic Procedure with Cancel Code.>
64	Engine Sensor Failure 1	Malfunction related to engine is detected.	<Ref. to CC(diag)-27, 64, Diagnostic Procedure with Cancel Code.>
65	Abnormality 1 of switches related to cruise control	Cruise control command switch malfunction is detected. (When the switch is pressed ON for a long time (approximately two minutes), stuck ON condition is detected.)	<Ref. to CC(diag)-27, 65, Diagnostic Procedure with Cancel Code.>
66	Cruise Control Calculation Error	Cruise control calculation (microcomputer) malfunction is detected.	<Ref. to CC(diag)-27, 66, Diagnostic Procedure with Cancel Code.>

10.Diagnostic Procedure with Cancel Code

A: 11

When CRUISE switch is pressed, or a malfunction related to CRUISE switch occurs, this is detected.
TROUBLE SYMPTOM:
- Cruise control cannot be set. (Cancelled immediately.)
- Cruise control cannot be released.

WIRING DIAGRAM:

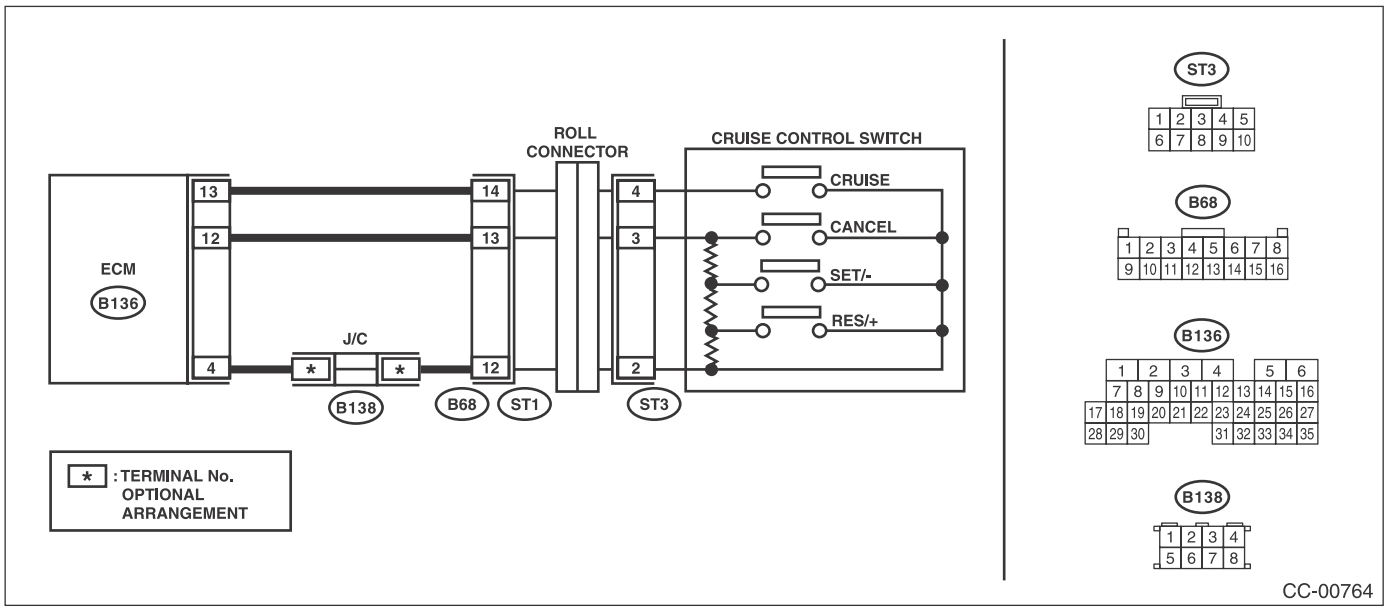

Step		Check	Yes	No
1	**CHECK CRUISE CONTROL COMMAND SWITCH CIRCUIT.** 1) Remove the driver's airbag module. <Ref. to AB-31, REMOVAL, Driver's Airbag Module.> 2) Disconnect the harness connector of cruise control command switch. 3) Turn the ignition switch to ON. 4) Measure the voltage between harness connector terminal and chassis ground. ***Connector & terminal*** ***(ST3) No. 4 (+) — Chassis ground (–):*** ***(ST3) No. 3 (+) — Chassis ground (–):***	Is the voltage 5 V or more?	Go to step **2**.	Check the harness between cruise control command switch and ECM, and the steering roll connector for open or short circuit, or for poor contact.
2	**CHECK CRUISE CONTROL COMMAND SWITCH CIRCUIT.** 1) Turn the ignition switch to OFF. 2) Remove the cruise control command switch. <Ref. to CC-7, REMOVAL, Cruise Control Command Switch.> 3) Measure the resistance between harness connector terminal and chassis ground. ***Connector & terminal*** ***(ST3) No. 2 — Chassis ground:***	Is the resistance less than 10 Ω?	Go to step **3**.	Check for open circuit between cruise control command switch, ECM, and chassis ground and check the ECM.
3	**CHECK CRUISE CONTROL COMMAND SWITCH.** Measure the resistance between switch terminals when the cruise control command switch is not depressed. ***Terminals*** ***No. 2 — No. 3:***	Is the resistance approx. 4 kΩ?	Go to step **4**.	Replace the cruise control command switch. <Ref. to CC-7, Cruise Control Command Switch.>

	Step	Check	Yes	No
4	**CHECK CANCEL SWITCH.** 1) Turn the ignition switch to OFF. 2) Remove the cruise control command switch. <Ref. to CC-7, REMOVAL, Cruise Control Command Switch.> 3) Measure the resistance between switch terminals with the CANCEL switch pressed. ***Terminals*** ***No. 2 — No. 3:***	Is the resistance approx. less than 1 Ω when the CANCEL switch is pressed?	Go to step **5**.	Replace the cruise control command switch. <Ref. to CC-7, Cruise Control Command Switch.>
5	**CHECK SET/COAST SWITCH.** Measure the resistance between switch terminals with the SET/COAST switch pressed. ***Terminals*** ***No. 2 — No. 3:***	Is the resistance approx. 250 Ω when SET/COAST switch is pressed?	Go to step **6**.	Replace the cruise control command switch. <Ref. to CC-7, Cruise Control Command Switch.>
6	**CHECK RESUME/ACCEL SWITCH CIRCUIT.** Measure the resistance between switch terminals with the RESUME/ACCEL switch pressed. ***Terminals*** ***No. 2 — No. 3:***	Is the resistance approx. 1,500 Ω when RESUME/ACCEL switch is pressed?	Replace the ECM. <Ref. to FU(H4SO)-39, Engine Control Module (ECM).> <Ref. to FU(H4DOTC)-57, Engine Control Module (ECM).> <Ref. to FU(H6DO)-50, Engine Control Module (ECM).>	Replace the cruise control command switch. <Ref. to CC-7, Cruise Control Command Switch.>

B: 12

Detected when brake pedal is depressed or malfunction related to stop light & brake switch occurs.

TROUBLE SYMPTOM:

- Cruise control cannot be set.
- Cruise control cannot be released.

WIRING DIAGRAM:

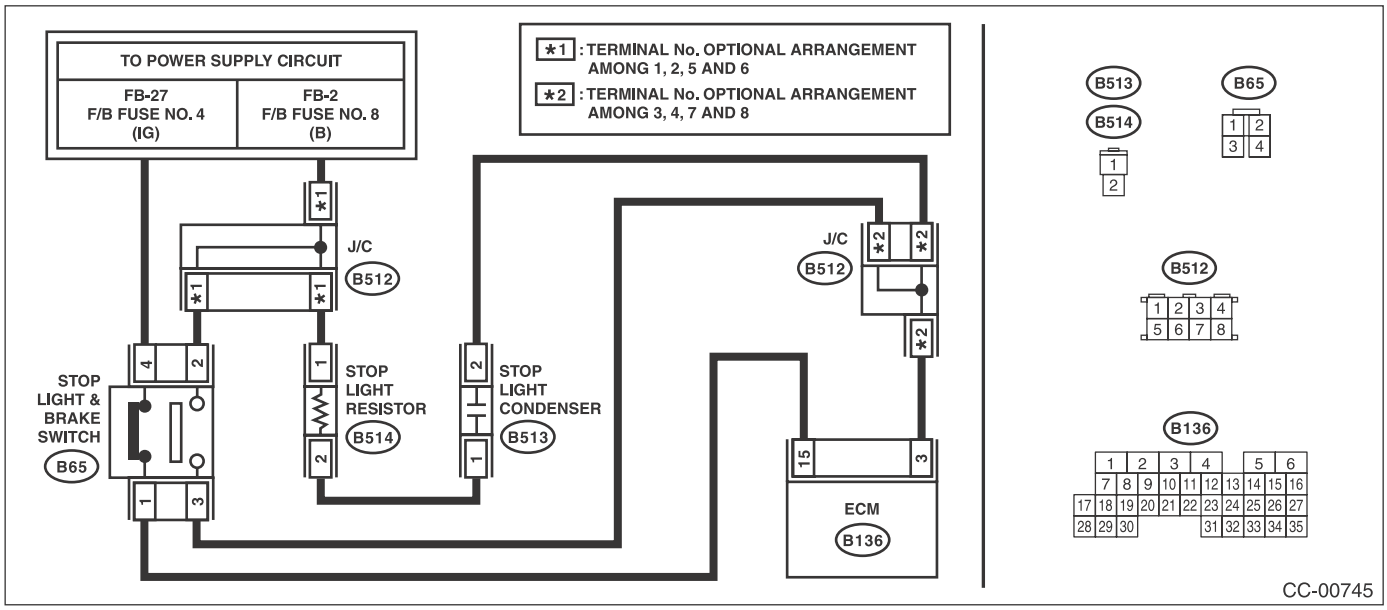

Step		Check	Yes	No
1	**CHECK STOP LIGHT & BRAKE SWITCH.** Check the stop light & brake switch. <Ref. to CC-12, Stop Light & Brake Switch.>	Is the stop light & brake switch and installation position OK?	Go to step **2**.	Replace the stop light & brake switch. Or adjust the installation position.
2	**CHECK STOP LIGHT & BRAKE SWITCH CIRCUIT.** 1) Turn the ignition switch to OFF. 2) Disconnect the stop light & brake switch harness connector. 3) Turn the ignition switch to ON. 4) Measure the voltage between harness connector terminal and chassis ground. ***Connector & terminal*** ***(B65) No. 2 (+) — Chassis ground (–):***	Is the voltage 10 V or more?	Go to step **3**.	• Check fuse No. 8 (in fuse & relay box). • Check for open or short circuit in the harness between stop light/ brake switch and fuse and relay box.
3	**CHECK STOP LIGHT & BRAKE SWITCH CIRCUIT.** Measure the voltage between harness connector terminal and chassis ground. ***Connector & terminal*** ***(B65) No. 4 (+) — Chassis ground (–):***	Is the voltage 10 V or more?	Go to step **4**.	• Check fuse No. 4 (in fuse & relay box). • Check for open or short circuit in the harness between stop light/ brake switch and fuse and relay box.

Step		Check	Yes	No
4	**CHECK STOP LIGHT & BRAKE SWITCH CIRCUIT.** 1) Turn the ignition switch to OFF. 2) Disconnect the harness connector of ECM. 3) Measure the resistance between ECM harness connector terminal and stop light & brake switch harness connector terminal. ***Connector & terminal*** ***(B136) No. 3 — (B65) No. 3:*** ***(B136) No. 15 — (B65) No. 1:***	Is the resistance less than 10 Ω?	Replace the ECM. <Ref. to FU(H4SO)-39, Engine Control Module (ECM).> <Ref. to FU(H4DOTC)-57, Engine Control Module (ECM).> <Ref. to FU(H6DO)-50, Engine Control Module (ECM).>	Repair the harness.

C: 13

Detected when clutch pedal is depressed or malfunction related to clutch switch occurs.

TROUBLE SYMPTOM:

- Cruise control cannot be set.
- Cruise control cannot be released.

WIRING DIAGRAM:

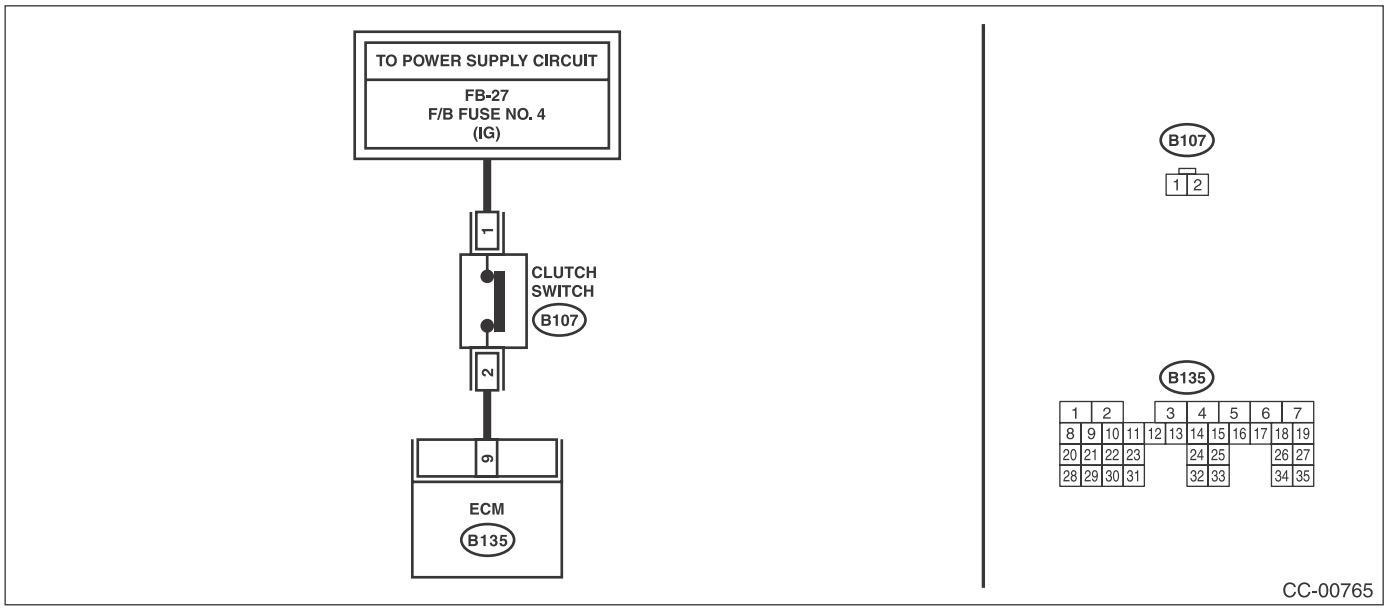

Step		Check	Yes	No
1	**CHECK CLUTCH SWITCH.** Check the clutch switch. <Ref. to CC-13, Clutch Switch.>	Is the clutch switch and installation position OK?	Go to step **2**.	Replace the clutch switch. Or adjust the installation position.
2	**CHECK CLUTCH SWITCH CIRCUIT.** 1) Turn the ignition switch to OFF. 2) Disconnect the clutch switch harness connector. 3) Turn the ignition switch to ON. 4) Measure the voltage between harness connector terminal and chassis ground. ***Connector & terminal*** ***(B107) No. 1 (+) — Chassis ground (−):***	Is the voltage 10 V or more?	Go to step **3**.	• Check fuse No. 4 (in fuse & relay box). • Check open or short circuit of harness between clutch switch and fuse & relay box.
3	**CHECK CLUTCH SWITCH CIRCUIT.** 1) Turn the ignition switch to OFF. 2) Disconnect the harness connector of ECM. 3) Measure the resistance between clutch switch harness connector terminal and ECM harness connector terminal. ***Connector & terminal*** ***(B107) No. 2 — (B135) No. 9:***	Is the resistance less than 10 Ω?	Replace the ECM. <Ref. to FU(H4SO)-39, Engine Control Module (ECM).> <Ref. to FU(H4DOTC)-57, Engine Control Module (ECM).> <Ref. to FU(H6DO)-50, Engine Control Module (ECM).>	Repair the harness.

D: 14

Detected when select lever is set in the neutral position, or when malfunction related to neutral position switch occurs.

TROUBLE SYMPTOM:

Cruise control cannot be set.

WIRING DIAGRAM:

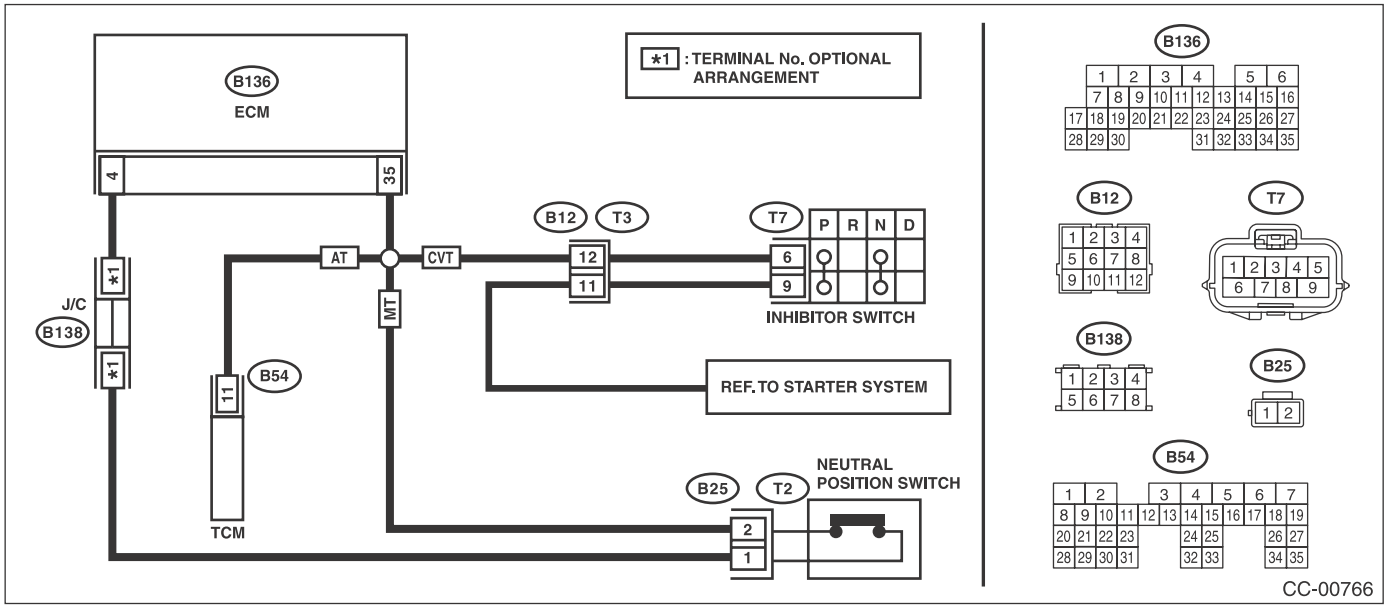

Step		Check	Yes	No
1	**CHECK SPECIFICATIONS OF CHECKED VEHICLE.** Check the vehicle destination and specification.	Is the vehicle 5AT model?	Go to step **2**.	Go to step **5**.
2	**CHECK NEUTRAL POSITION SWITCH SIGNAL.** 1) Connect the Subaru Select Monitor to data link connector. 2) Turn the ignition switch to ON and run the Subaru Select Monitor. 3) Select {Engine Control System} from the main menu. 4) Then, select the {Current Data Display & Save}. 5) Shift the select lever to "P" or "N" range, and check the signal of the neutral position switch.	If the select lever is in the "P" or the "N" range, is the Subaru Select Monitor Display ON? Or, if in a range other than "P" or "N", is the Subaru Select Monitor display OFF?	Replace the ECM. <Ref. to FU(H4DOTC)-57, Engine Control Module (ECM).> <Ref. to FU(H6DO)-50, Engine Control Module (ECM).>	Go to step **3**.
3	**CHECK TCM OUTPUT VOLTAGE.** 1) Turn the ignition switch to ON. 2) Measure the voltage between TCM harness connector terminal and chassis ground. ***Connector & terminal*** ***(B54) No. 11 (+) — Chassis ground (−):***	If the select lever is in a range other than "P" or "N" ranges, is the voltage 10V or more? Or, if in "P" or "N", is the voltage less than 1V?	Go to step **4**.	Check the TCM. <Ref. to 5AT(diag)-2, Basic Diagnostic Procedure.>
4	**CHECK HARNESS BETWEEN TCM AND ECM.** 1) Turn the ignition switch to OFF. 2) Disconnect the harness connector from TCM and ECM. 3) Measure the resistance between TCM harness connector terminal and ECM harness connector terminal. ***Connector & terminal*** ***(B136) No. 35 — (B54) No. 11:***	Is the resistance less than 10 Ω?	Replace the ECM. <Ref. to FU(H4DOTC)-57, Engine Control Module (ECM).> <Ref. to FU(H6DO)-50, Engine Control Module (ECM).>	Repair the wiring harness.

	Step	Check	Yes	No
5	**CHECK TRANSMISSION TYPE.**	Is the transmission type CVT?	Go to step **6**.	Go to step **9**.(MT model)
6	**CHECK INHIBITOR SWITCH CIRCUIT.** 1) Turn the ignition switch to OFF. 2) Disconnect the inhibitor switch harness connector. 3) Turn the ignition switch to ON. 4) Measure the voltage between harness connector terminal and chassis ground. ***Connector & terminal*** ***(T7) No. 6 (+) — Chassis ground (–):***	Is the voltage 10 V or more?	Go to step **7**.	Check for open or short circuit in the harness between inhibitor switch and ECM.
7	**CHECK INHIBITOR SWITCH CIRCUIT.** 1) Turn the ignition switch to OFF. 2) Disconnect the starter motor harness connector. 3) Measure the resistance between inhibitor switch harness connector terminal and starter motor. ***Connector & terminal*** ***(T7) No. 9 — Starter motor:***	Is the resistance less than 10 Ω?	Go to step **8**.	Repair the harness.
8	**CHECK INHIBITOR SWITCH.** Remove and check the inhibitor switch. <Ref. to CC-14, Inhibitor Switch.>	Is the inhibitor switch OK?	Replace the ECM. <Ref. to FU(H4SO)-39, Engine Control Module (ECM).>	Replace the inhibitor switch.
9	**CHECK NEUTRAL POSITION SWITCH CIRCUIT.** 1) Turn the ignition switch to OFF. 2) Disconnect the neutral position switch harness connector. 3) Turn the ignition switch to ON. 4) Measure the voltage between harness connector terminal and chassis ground. ***Connector & terminal*** ***(B25) No. 2 (+) — Chassis ground (–):***	Is the voltage 10 V or more?	Go to step **10**.	Check for open or short circuit in the harness between neutral position switch and ECM.
10	**CHECK NEUTRAL POSITION SWITCH CIRCUIT.** 1) Turn the ignition switch to OFF. 2) Measure resistance between harness connector terminal of neutral position switch and chassis ground. ***Connector & terminal*** ***(B25) No. 1 — Chassis ground:***	Is the resistance less than 10 Ω?	Go to step **11**.	Repair the harness.
11	**CHECK NEUTRAL POSITION SWITCH.** Remove and check the neutral position switch. <Ref. to CC-16, Neutral Position Switch.>	Is the neutral position switch OK?	Replace the ECM. <Ref. to FU(H4SO)-39, Engine Control Module (ECM).> <Ref. to FU(H4DOTC)-57, Engine Control Module (ECM).>	Replace the neutral position switch.

E: 15

Detected when CANCEL switch is pressed or malfunction related to CRUISE switch occurs.
TROUBLE SYMPTOM:
- Cruise control cannot be set. (Cancelled immediately.)
- Cruise control cannot be released.

Refer to DTC 11 for diagnostic procedure.
<Ref. to CC(diag)-16, 11, Diagnostic Procedure with Cancel Code.>

F: 16

Detected when ignition switch is turned to OFF or malfunction related to the ignition switch occurs.
TROUBLE SYMPTOM:
Cruise control cannot be set.
WIRING DIAGRAM:

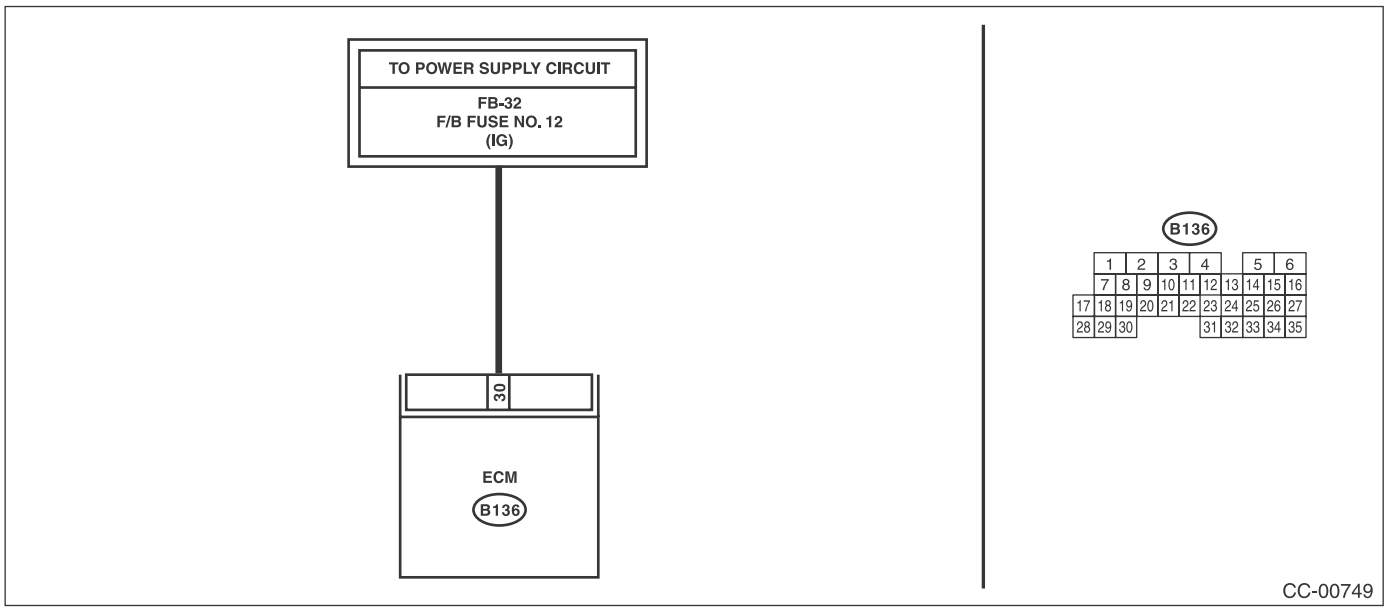

Step		Check	Yes	No
1	**CHECK IGNITION SWITCH CIRCUIT.** 1) Turn the ignition switch to OFF. 2) Disconnect the ECM harness connector. 3) Turn the ignition switch to ON. 4) Measure the voltage between harness connector terminal and chassis ground. ***Connector & terminal*** ***(B136) No. 30 (+) — Chassis ground (–):***	Is the voltage 10 V or more?	Check for poor contact of ECM connector.	• Check fuse No. 12 (in fuse & relay box). • Check the harness for open or short circuit between ignition switch and ECM.

G: 21

Cruise control command switch malfunction is detected.
TROUBLE SYMPTOM:
- Cruise control cannot be set. (Cancelled immediately.)
- Cruise control cannot be released.

Refer to DTC 11 for diagnostic procedure.
<Ref. to CC(diag)-16, 11, Diagnostic Procedure with Cancel Code.>

H: 22

Malfunction related to vehicle speed sensor is detected.
DIAGNOSIS:
Open or shorted circuit in vehicle speed sensor system.
TROUBLE SYMPTOM:
Cruise control cannot be set. (Cancelled immediately.)

	Step	Check	Yes	No
1	**CHECK ABS OR VDC WARNING LIGHT.** 1) Turn the ignition switch to ON. 2) After the initial operation of combination meter is completed, check if ABS or VDC warning light continues to illuminate.	Does the warning light continue to illuminate?	Check the VDCCM. <Ref. to VDC(diag)-2, Basic Diagnostic Procedure.>	Go to step **2**.
2	**CHECK DTC OF LAN COMMUNICATION CIRCUIT.** Read the DTC of body integrated unit using Subaru Select Monitor.	Is DTC displayed?	Perform inspection according to DTC.	Replace the ECM. <Ref. to FU(H4SO)-39, Engine Control Module (ECM).> <Ref. to FU(H4DOTC)-57, Engine Control Module (ECM).> <Ref. to FU(H6DO)-50, Engine Control Module (ECM).>

I: 24

Malfunction in cruise control-related switch is detected.
TROUBLE SYMPTOM:
- Cruise control cannot be set. (Cancelled immediately.)
- Cruise control cannot be released.

Refer to DTC 11 for diagnostic procedure.
<Ref. to CC(diag)-16, 11, Diagnostic Procedure with Cancel Code.>

J: 25

Malfunction of brake input circuit in ECM is detected.
Refer to the Engine Diagnostic Procedure for diagnostic procedure.
<Ref. to EN(H4SO)(diag)-2, PROCEDURE, Basic Diagnostic Procedure.>
<Ref. to EN(H4DOTC)(diag)-2, PROCEDURE, Basic Diagnostic Procedure.>
<Ref. to EN(H6DO)(diag)-2, PROCEDURE, Basic Diagnostic Procedure.>

K: 31

Engine speed signal malfunction is detected.
Abnormal increase of engine speed is detected.
Gear is placed in 1st or Reverse position.
After driving at the 2nd gear position or higher, perform the cruise setting again. If a cancel code is not detected, it is normal.

L: 32

This DTC is detected out of vehicle speed range.
Increase vehicle speed high enough to allow the cruise control to function, and then perform setting operation again.
If cancel code is still detected after setting cruise again, perform the diagnosis for DTC 22.
Refer to DTC 22 for diagnostic procedure.
<Ref. to CC(diag)-25, 22, Diagnostic Procedure with Cancel Code.>

M: 34

The vehicle has been driven at a speed higher than set speed for a long time (approximately 10 minutes) during cruise driving.
This cancel code is detected when driving for a long period of time at a speed higher than appropriate for cruise control setting by operating the accelerator pedal.
Perform the cruise control setting operation again. If the cancel code is not detected, it is normal.

N: 35

Detected when it is impossible to perform the vehicle speed feedback.
Set vehicle speed cannot be kept for some reasons (steep uphill, unreleased parking brake, etc.) during cruise driving.
Cancel code is detected when driving conditions are not suitable for cruise control.
Perform cruise set operation again after clearing the possible cause.

O: 41

VDC/TCS has operated.
Vehicle dynamics control (VDC) or TCS is operated during cruise driving or cruise setting.
<Ref. to VDC(diag)-2, PROCEDURE, Basic Diagnostic Procedure.>

P: 43

Malfunction of ABS/VDC is detected.
VDC malfunction is detected during cruise driving or cruise setting.
<Ref. to VDC(diag)-2, PROCEDURE, Basic Diagnostic Procedure.>

Q: 44

Body integrated unit malfunction is detected.
Body integrated unit system malfunction is detected during cruise driving or cruise setting.
<Ref. to LAN(diag)-2, PROCEDURE, Basic Diagnostic Procedure.>

R: 45

Malfunction of the combination meter is detected.
Combination meter malfunction is detected during cruise driving or cruise setting.
<Ref. to LAN(diag)-2, PROCEDURE, Basic Diagnostic Procedure.>

S: 49

Automatic transmission malfunction is detected.
Automatic transmission malfunction is detected during cruise driving or cruise setting. <Ref. to 5AT(diag)-2, PROCEDURE, Basic Diagnostic Procedure.> <Ref. to CVT(diag)-2, PROCEDURE, Basic Diagnostic Procedure.>

T: 61

Malfunction in the stop light & brake switch is detected.
TROUBLE SYMPTOM:
- Cruise control cannot be set.
- Cruise control cannot be released.

Refer to DTC 12 for diagnostic procedure.
<Ref. to CC(diag)-18, 12, Diagnostic Procedure with Cancel Code.>

U: 62

Neutral position switch malfunction is detected.
TROUBLE SYMPTOM:
Cruise control cannot be set.
Refer to DTC 14 for diagnostic procedure.
<Ref. to CC(diag)-21, 14, Diagnostic Procedure with Cancel Code.>

V: 63

Malfunction of vehicle speed signal variation is detected.
TROUBLE SYMPTOM:
Cruise control cannot be set. (Cancelled immediately.)
Refer to DTC 22 for diagnostic procedure.
<Ref. to CC(diag)-25, 22, Diagnostic Procedure with Cancel Code.>

W: 64

Malfunction related to engine is detected.
Refer to the Engine Diagnostic Procedure for diagnostic procedure.
<Ref. to EN(H4SO)(diag)-2, PROCEDURE, Basic Diagnostic Procedure.>
<Ref. to EN(H4DOTC)(diag)-2, PROCEDURE, Basic Diagnostic Procedure.>
<Ref. to EN(H6DO)(diag)-2, PROCEDURE, Basic Diagnostic Procedure.>

X: 65

Cruise control command switch malfunction is detected.
While the command switch is pressed ON for a long time (approximately two minutes), stuck ON condition is detected.
TROUBLE SYMPTOM:
- Cruise control cannot be set. (Cancelled immediately.)
- Cruise control cannot be released.

Refer to DTC 11 for diagnostic procedure.
<Ref. to CC(diag)-16, 11, Diagnostic Procedure with Cancel Code.>

Y: 66

Cruise control processing malfunction is detected.
Refer to the Engine Diagnostic Procedure for diagnostic procedure.
<Ref. to EN(H4SO)(diag)-2, PROCEDURE, Basic Diagnostic Procedure.>
<Ref. to EN(H4DOTC)(diag)-2, PROCEDURE, Basic Diagnostic Procedure.>
<Ref. to EN(H6DO)(diag)-2, PROCEDURE, Basic Diagnostic Procedure.>

IMMOBILIZER (DIAGNOSTICS)

IM(diag)

Page

1. Basic Diagnostic Procedure 2
2. General Description 4
3. Electrical Component Location 6
4. Immobilizer Control Module I/O Signal 7
5. Subaru Select Monitor 8
6. Read Diagnostic Trouble Code (DTC) 9
7. Clear Memory Mode 10
8. Diagnostics Chart for Security Indicator Light 11
9. List of Diagnostic Trouble Code (DTC) 14
10. Diagnostic Procedure with Diagnostic Trouble Code (DTC) 16

1. Basic Diagnostic Procedure

A: PROCEDURE

	Step	Check	Yes	No
1	**CHECK SECURITY INDICATOR LIGHT.** 1) Turn the ignition switch to “OFF” or “ACC”. 2) Wait at least 60 seconds.	Does the security indicator light blink?	Go to step **2**.	Check the security indicator light circuit. <Ref. to IM(diag)-11, CHECK SECURITY INDICATOR LIGHT CIRCUIT, INSPECTION, Diagnostics Chart for Security Indicator Light.>
2	**CHECK KEY SWITCH.** Remove the key from ignition switch.	Does the security indicator light begin to blink within 1 second after the key is removed?	Go to step **3**.	Check the key switch circuit. <Ref. to IM(diag)-13, CHECK KEY SWITCH CIRCUIT, INSPECTION, Diagnostics Chart for Security Indicator Light.>
3	**CHECK SECURITY INDICATOR LIGHT.** Turn the ignition switch to ON.	Does the security indicator light go off?	Go to step **5**.	Go to step **4**.
4	**CHECK ENGINE START.** Turn the ignition switch to START.	Does the starter operate?	Check the LAN communication system. <Ref. to LAN(diag)-2, Basic Diagnostic Procedure.>	Go to step **7**.
5	**CHECK ENGINE START.** Turn the ignition switch to START.	Does the starter operate?	Go to step **6**.	Check the LAN communication system. <Ref. to LAN(diag)-2, Basic Diagnostic Procedure.>
6	**CHECK ENGINE START.** Turn the ignition switch to START.	Does the engine start?	Immobilizer system is normal.	Go to step **8**.
7	**CHECK DTC.** Read the DTC of body integrated unit using Subaru Select Monitor. <Ref. to IM(diag)-8, Subaru Select Monitor.>	Is the DTC displayed on screen?	Go to step **10**.	Replace the body integrated unit. <Ref. to SL-72, Body Integrated Unit.> Register all ignition keys (transponders). Refer to the “PC application help for Subaru Select Monitor”.

	Step	Check	Yes	No
8	**CHECK DTC.** Read the DTC relating the ECM using the Subaru Select Monitor. <Ref. to IM(diag)-8, Subaru Select Monitor.>	Is the DTC displayed on screen?	Go to step **9**.	Perform the diagnosis for engine system. <Ref. to EN(H4SO)(diag)-66, PROCEDURE, Diagnostics for Engine Starting Failure.> <Ref. to EN(H4DOTC)(diag)-67, PROCEDURE, Diagnostics for Engine Starting Failure.> <Ref. to EN(H6DO)(diag)-69, PROCEDURE, Diagnostics for Engine Starting Failure.>
9	**CHECK FREEZE FRAME DATA.** Using the Subaru Select Monitor, check the Freeze Frame Data.	Was the Freeze Frame Data recorded?	Record the data. Go to step **10**.	Go to step **10**.
10	**PERFORM DIAGNOSIS.** 1) Inspect using the “Diagnostic Procedure with Diagnostic Trouble Code (DTC)”. <Ref. to IM(diag)-16, Diagnostic Procedure with Diagnostic Trouble Code (DTC).> 2) Repair the trouble cause. 3) Perform the Clear Memory Mode. 4) Read DTC’s again.	Is the DTC displayed on screen?	Inspect using the “Diagnostic Procedure with Diagnostic Trouble Code (DTC)”. <Ref. to IM(diag)-16, Diagnostic Procedure with Diagnostic Trouble Code (DTC).>	Finish the diagnosis.

2. General Description

A: CAUTION

CAUTION:

- **Do not use electrical test devices on any airbag system wiring harnesses and connector circuits.**
- **Be careful not to damage the airbag system wiring harness.**
- **While diagnostic items are being checked, do not operate radios, portable telephones, etc. which emit electromagnetic waves near or inside the vehicle.**

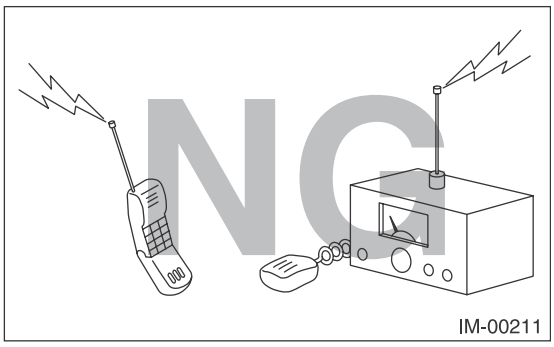

- **When turning the ignition switch to ON or OFF while diagnostic items are being checked, do not allow keys with different ID codes close to the ignition switch. If the ignition key is on a key holder, remove it from the key holder before performing diagnoses.**

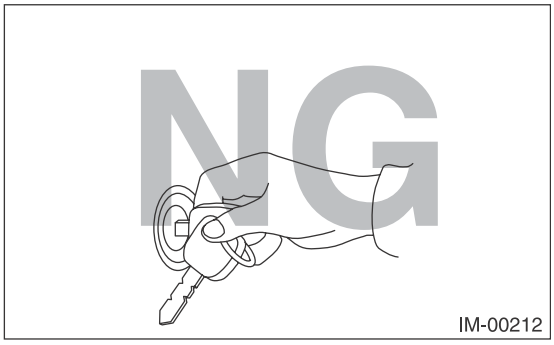

- **When repeatedly turning the ignition switch to ON or OFF while diagnostic items are being checked, it should be switched in cycles of "ON" for at least 5 seconds → "OFF" for at least 8 seconds.**

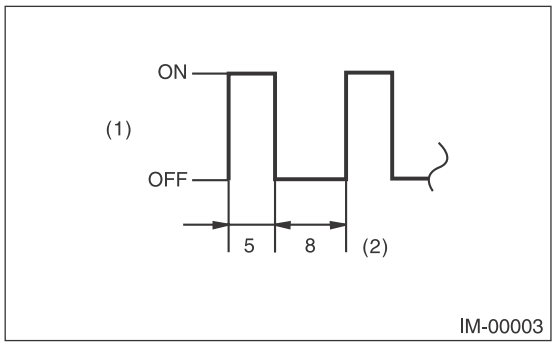

(1) Ignition switch position
(2) Sec.

- **If the engine fails to start with a registered ignition key, detach the ignition key from ignition switch and wait for approx. 1 second until security indicator light begins to flash. And then start the engine again.**
- **Before performing the diagnostics, obtain all keys for the vehicle from the owner.**
- **Do not install or register a body integrated unit already registered to another vehicle to diagnose failures or inspect functions.**

B: PREPARATION TOOL

1. SPECIAL TOOL

ILLUSTRATION	TOOL NUMBER	DESCRIPTION	REMARKS
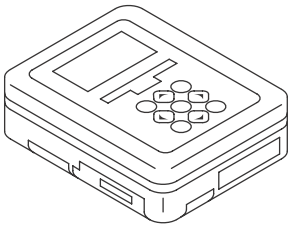 ST1B022XU0	1B022XU0	SUBARU SELECT MONITOR III KIT	Used for troubleshooting the electrical system.

2. GENERAL TOOL

TOOL NAME	REMARKS
Circuit tester	Used for measuring resistance, voltage and current.

3. Electrical Component Location

A: LOCATION

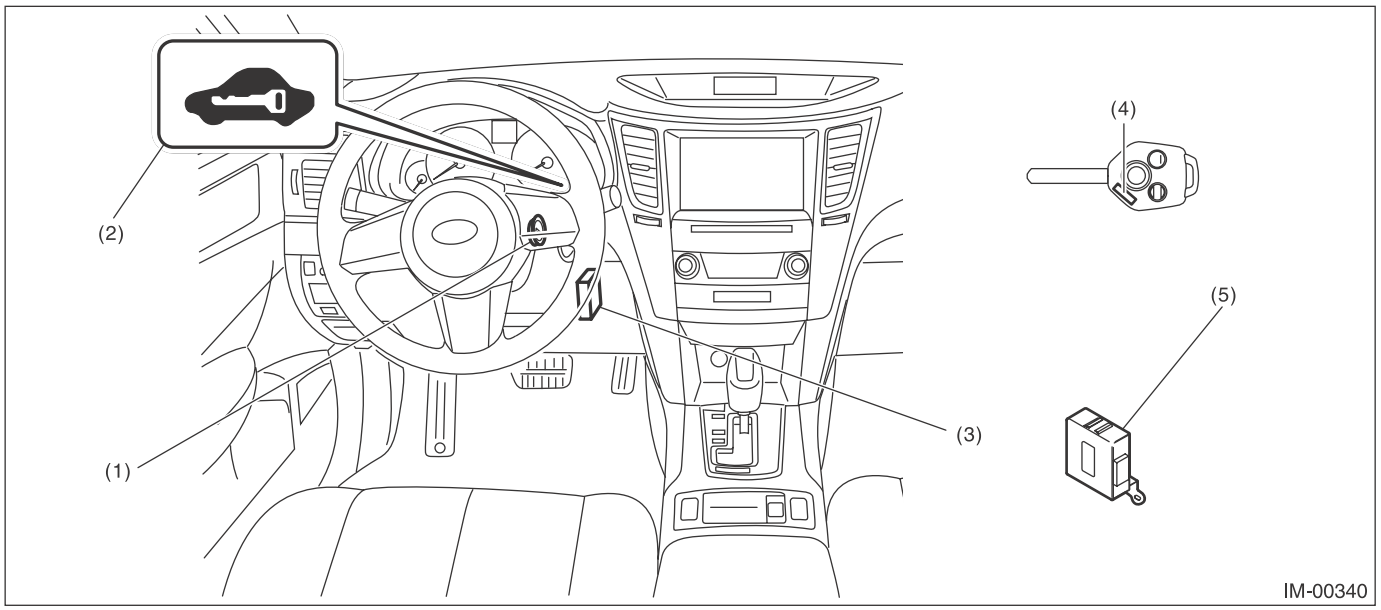

(1) Antenna
(2) Security indicator light (LED bulb)
(3) Body integrated unit
(4) Transponder
(5) Security control module (Only for Canada models)

4. Immobilizer Control Module I/O Signal

A: WIRING DIAGRAM

1. IMMOBILIZER

<Ref. to WI-158, WIRING DIAGRAM, Immobilizer System.>

5. Subaru Select Monitor

A: OPERATION

1. HOW TO USE THE SUBARU SELECT MONITOR

For the operation procedure, refer to the “PC application help for Subaru Select Monitor”.

2. READ DIAGNOSTIC TROUBLE CODE (DTC) FOR ENGINE AND BODY INTEGRATED UNIT

Refer to “Read Diagnostic Trouble Code” for information about how to indicate DTC. <Ref. to IM(diag)-9, Read Diagnostic Trouble Code (DTC).>

3. COMMUNICATION LINE CHECK

The communication line between ECM and body integrated unit can be checked in “System Operation Check Mode”. This is referred to as “Communication line check”.
For the operation procedure, refer to the “PC application help for Subaru Select Monitor”.

NOTE:
If a problem is detected, repair the trouble cause. <Ref. to IM(diag)-20, DTC P1572 IMM CIRCUIT FAILURE (EXCEPT ANTENNA CIRCUIT), Diagnostic Procedure with Diagnostic Trouble Code (DTC).>

6. Read Diagnostic Trouble Code (DTC)

A: OPERATION

1. ECM

For the operation procedure, refer to the “PC application help for Subaru Select Monitor”.

NOTE:
For detailed concerning DTC, refer to the List of Diagnostic Trouble Codes (DTC). <Ref. to IM(diag)-14, LIST, List of Diagnostic Trouble Code (DTC).>

2. BODY INTEGRATED UNIT

For the operation procedure, refer to the “PC application help for Subaru Select Monitor”.

NOTE:
For detailed concerning DTC, refer to the List of Diagnostic Trouble Codes (DTC). <Ref. to IM(diag)-14, LIST, List of Diagnostic Trouble Code (DTC).>

7. Clear Memory Mode

A: OPERATION

1. ECM

For the operation procedure, refer to the “PC application help for Subaru Select Monitor”.

NOTE:
Initial diagnosis of electronic throttle control is performed after memory clearance. Wait for 10 seconds or more after turning the ignition switch to ON, and then start the engine.

2. BODY INTEGRATED UNIT

For the operation procedure, refer to the “PC application help for Subaru Select Monitor”.

8. Diagnostics Chart for Security Indicator Light

A: INSPECTION

1. CHECK SECURITY INDICATOR LIGHT CIRCUIT

WIRING DIAGRAM:

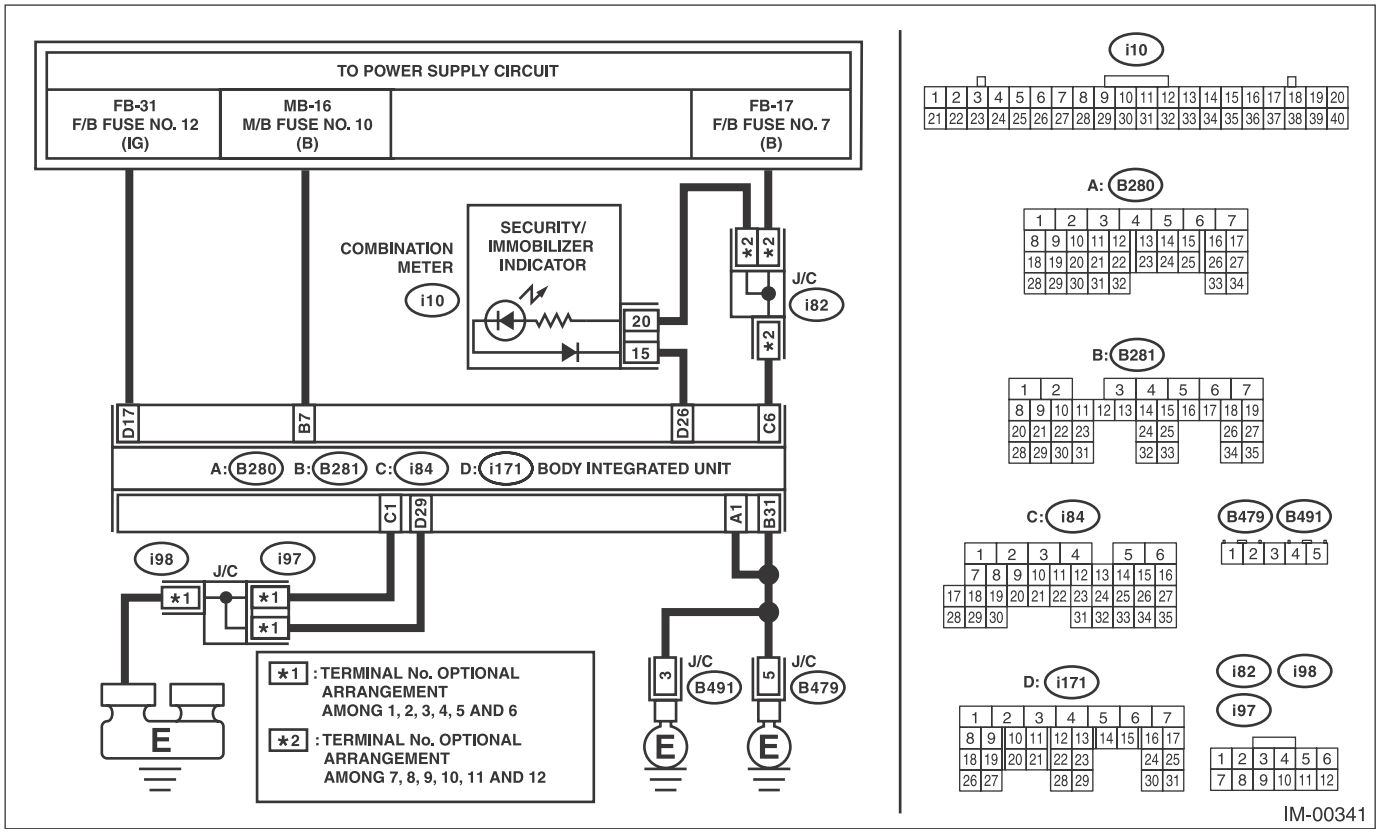

Step		Check	Yes	No
1	**CHECK FUSE.** 1) Turn the ignition switch to OFF. 2) Check the fuse (M/B No. 10).	Is the fuse blown out?	Replace the fuse. If the replaced fuse blows out easily, repair the short circuit in the harness between the fuse and body integrated unit.	Go to step **2**.
2	**CHECK SECURITY INDICATOR LIGHT.** 1) Disconnect the harness connector from body integrated unit. 2) Connect the resistor (100 Ω) between the body integrated unit harness connector terminal (i171) No. 26 and chassis ground.	Does the security indicator light illuminate?	Go to step **3**.	Go to step **6**.
3	**CHECK BODY INTEGRATED UNIT GROUND CIRCUIT.** Measure the resistance between body integrated unit harness connector terminal and chassis ground. ***Connector & terminal*** ***(B280) No. 1 — Chassis ground:*** ***(B281) No. 31 — Chassis ground:*** ***(i84) No. 1 — Chassis ground:*** ***(i171) No. 29 — Chassis ground:***	Is the resistance less than 10 Ω?	Go to step **4**.	Repair the open circuit of the body integrated unit ground circuit.

	Step	Check	Yes	No
4	**CHECK BODY INTEGRATED UNIT IGNITION CIRCUIT.** 1) Turn the ignition switch to ON. (engine OFF) 2) Measure the voltage between the body integrated unit harness connector terminal and chassis ground. ***Connector & terminal*** ***(i171) No. 17 (+) — Chassis ground (–):***	Is the voltage 10 V or more?	Go to step **5**.	Check the harness for open or short circuit between the body integrated unit and ignition switch.
5	**CHECK BODY INTEGRATED UNIT POWER SUPPLY CIRCUIT.** 1) Turn the ignition switch to OFF. 2) Measure the voltage between the body integrated unit harness connector terminal and chassis ground. ***Connector & terminal*** ***(B281) No. 7 (+) — Chassis ground (–):*** ***(i84) No. 6 (+) — Chassis ground (–):***	Is the voltage 10 V or more?	Replace the body integrated unit. <Ref. to SL-72, Body Integrated Unit.> Register all ignition keys (transponders). Refer to the "PC application help for Subaru Select Monitor".	Check the harness for open or short circuit between body integrated unit and fuse.
6	**CHECK COMBINATION METER CIRCUIT.** 1) Remove the combination meter. <Ref. to IDI-20, Combination Meter.> 2) Measure the voltage between combination meter harness connector terminal and chassis ground. ***Connector & terminal*** ***(i10) No. 20 (+) — Chassis ground (–):***	Is the voltage 10 V or more?	Go to step **7**.	Check for an open or short circuit in the harness between the combination meter and fuse.
7	**CHECK COMBINATION METER CIRCUIT.** Measure the resistance between the body integrated unit harness connector terminal and combination meter harness connector terminal. ***Connector & terminal*** ***(i171) No. 26 — (i10) No. 15:***	Is the resistance less than 10 Ω?	LED bulb is defective. Replace the combination meter case assembly. <Ref. to IDI-25, DISASSEMBLY, Combination Meter.>	Repair the harness or connector.

2. CHECK KEY SWITCH CIRCUIT

WIRING DIAGRAM:

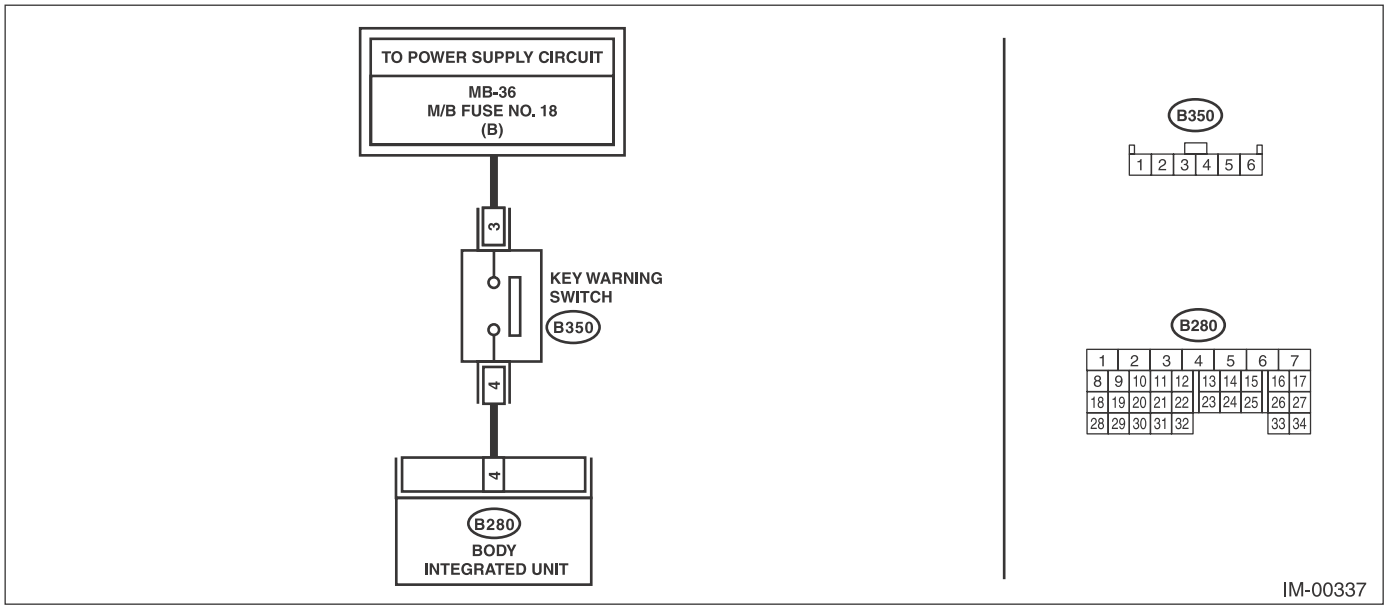

	Step	Check	Yes	No
1	**CHECK POWER SUPPLY CIRCUIT.** 1) Disconnect the harness connector from key warning switch. 2) Measure the voltage between key warning switch harness connector terminal and chassis ground. ***Connector & terminal*** ***(B350) No. 3 (+) — Chassis ground (–):***	Is the voltage 10 V or more?	Go to step **2**.	Check the harness for an open or short between the key warning switch and fuse.
2	**CHECK KEY WARNING SWITCH.** 1) Insert the ignition key in the ignition switch. (OFF or ACC) 2) Measure the resistance between key warning switch connector terminals. ***Connector & terminal*** ***No. 3 — No. 4:***	Is the resistance less than 1 Ω?	Go to step **3**.	Replace the key warning switch.
3	**CHECK KEY WARNING SWITCH.** 1) Remove the ignition key from ignition switch. 2) Measure the resistance between key warning switch connector terminals. ***Connector & terminal*** ***No. 3 — No. 4:***	Is the resistance 1 MΩ or more?	Go to step **4**.	Replace the key warning switch.
4	**CHECK HARNESS BETWEEN KEY WARNING SWITCH AND BODY INTEGRATED UNIT.** 1) Disconnect the harness connector from body integrated unit. 2) Measure the resistance between key warning switch harness connector terminal and body integrated unit harness connector terminal. ***Connector & terminal*** ***(B350) No. 4 — (B280) No. 4:***	Is the resistance less than 10 Ω?	Replace the body integrated unit. <Ref. to SL-72, Body Integrated Unit.> Register all ignition keys (transponders). Refer to the “PC application help for Subaru Select Monitor”.	Repair the harness between key warning switch and body integrated unit.

9. List of Diagnostic Trouble Code (DTC)

A: LIST

1. ECM

DTC	Item	Contents of diagnosis	Index No.
P0513	Incorrect Immobilizer Key	Incorrect immobilizer key (Use of unregistered key in body integrated unit)	<Ref. to IM(diag)-16, DTC P0513 INCORRECT IMMOBILIZER KEY, Diagnostic Procedure with Diagnostic Trouble Code (DTC).>
P1570	Antenna	Faulty antenna	<Ref. to IM(diag)-17, DTC P1570 ANTENNA, Diagnostic Procedure with Diagnostic Trouble Code (DTC).>
P1571	Reference Code Incompatibility	Reference code incompatibility between body integrated unit and ECM	<Ref. to IM(diag)-19, DTC P1571 REFERENCE CODE INCOMPATIBILITY, Diagnostic Procedure with Diagnostic Trouble Code (DTC).>
P1572	IMM Circuit Failure (Except Antenna Circuit)	• Communication failure between body integrated unit and ECM • Combination meter and body integrated unit registration failed	<Ref. to IM(diag)-20, DTC P1572 IMM CIRCUIT FAILURE (EXCEPT ANTENNA CIRCUIT), Diagnostic Procedure with Diagnostic Trouble Code (DTC).>
P1574	Key Communication Failure	Communication failure between key and body integrated unit	<Ref. to IM(diag)-22, DTC P1574 KEY COMMUNICATION FAILURE, Diagnostic Procedure with Diagnostic Trouble Code (DTC).>
P1576	EGI Control Module EEPROM	ECM malfunctioning	<Ref. to IM(diag)-22, DTC P1576 EGI CONTROL MODULE EEPROM, Diagnostic Procedure with Diagnostic Trouble Code (DTC).>
P1577	IMM Control Module EEPROM	Body integrated unit malfunctioning	<Ref. to IM(diag)-23, DTC P1577 IMM CONTROL MODULE EEPROM, Diagnostic Procedure with Diagnostic Trouble Code (DTC).>
P1578	Meter Failure (Except for model for Canada)	• Reference code incompatibility between combination meter and body integrated unit • Communication failure between body integrated unit and ECM	<Ref. to IM(diag)-24, DTC P1578 METER FAILURE, Diagnostic Procedure with Diagnostic Trouble Code (DTC).>
	Meter Failure (Model for Canada)	• Reference code incompatibility between body integrated unit and security control module • Communication failure between body integrated unit and ECM	

NOTE:
Perform diagnosis of engine DTC when a DTC other than an immobilizer DTC is detected. <Ref. to EN(H4SO)(diag)-79, List of Diagnostic Trouble Code (DTC).> <Ref. to EN(H4DOTC)(diag)-78, List of Diagnostic Trouble Code (DTC).> <Ref. to EN(H6DO)(diag)-82, List of Diagnostic Trouble Code (DTC).>

2. BODY INTEGRATED UNIT

DTC	Item	Contents of diagnosis	Index No.	Relation between ECM and DTC
B1401	M Collation NG	Reference code incompatibility between combination meter and body integrated unit	<Ref. to IM(diag)-25, DTC B1401 M COLLATION NG, Diagnostic Procedure with Diagnostic Trouble Code (DTC).>	P1578
B1402	Immobilizer Key Collation NG	• Incorrect immobilizer key (Use of unregistered key in body integrated unit) • Faulty antenna	<Ref. to IM(diag)-25, DTC B1402 IMMOBILIZER KEY COLLATION NG, Diagnostic Procedure with Diagnostic Trouble Code (DTC).>	• P0513 • P1570 • P1574
B1403	E/G request NG	Communication failure between body integrated unit and ECM	<Ref. to IM(diag)-25, DTC B1403 E/G REQUEST NG, Diagnostic Procedure with Diagnostic Trouble Code (DTC).>	P1572
B1405	SCU Collation NG	Reference code incompatibility between body integrated unit and security control module	<Ref. to IM(diag)-25, DTC B1405 SCU COLLATION NG, Diagnostic Procedure with Diagnostic Trouble Code (DTC).>	P1578
B1406	SCU_EEPROM_NG	Malfunction of security control module	<Ref. to IM(diag)-26, DTC B1406 SCU_EEPROM_NG, Diagnostic Procedure with Diagnostic Trouble Code (DTC).>	P1578

NOTE:
The starter relay control is performed in immobilizer system. When the body integrated unit detects a non-conformity of reference code, it immediately outputs a starter relay cut signal to ECM, and then ECM stops the starter relay operation. In this case, engine does not start, and DTC is not recorded in ECM. Check that the engine does not start on the DTC of body integrated unit.

10. Diagnostic Procedure with Diagnostic Trouble Code (DTC)

A: DTC P0513 INCORRECT IMMOBILIZER KEY

DTC DETECTING CONDITION:

Incorrect immobilizer key (Use of unregistered key in body integrated unit)

	Step	Check	Yes	No
1	**PERFORM REGISTRATION ON IGNITION KEY.** Perform registration on all keys of the vehicle. Refer to the “PC application help for Subaru Select Monitor”.	Is registration for all keys complete?	Finish the diagnosis.	Replace ignition keys (including transponder) which cannot be registered. Go to step **2**.
2	**PERFORM REGISTRATION ON IGNITION KEY.** Perform registration on all keys of the vehicle. Refer to the “PC application help for Subaru Select Monitor”.	Is registration for all keys complete?	Finish the diagnosis.	Replace the body integrated unit. <Ref. to SL-72, Body Integrated Unit.> Register all ignition keys (transponders). Refer to the “PC application help for Subaru Select Monitor”.

B: DTC P1570 ANTENNA

DTC DETECTING CONDITION:

Faulty antenna

WIRING DIAGRAM:

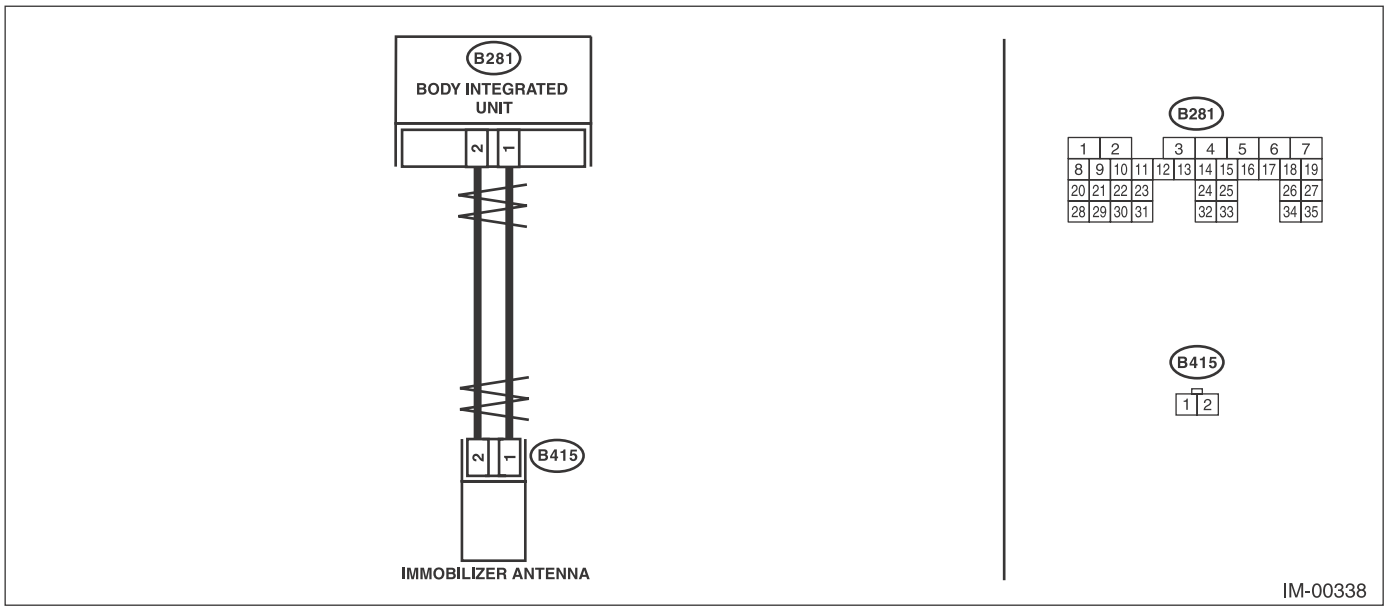

Step		Check	Yes	No
1	**CHECK ANTENNA CIRCUIT.** 1) Turn the ignition switch to OFF. 2) Disconnect the harness connector from the antenna. <Ref. to SL-80, Immobilizer Antenna.> 3) Measure the resistance of antenna circuit. ***Connector & terminal*** ***(B415) No. 1 — No. 2:***	Is the resistance less than 10 Ω?	Go to step **2**.	Replace the antenna. <Ref. to SL-80, Immobilizer Antenna.>
2	**CHECK ANTENNA CIRCUIT.** 1) Disconnect the harness connector from body integrated unit. 2) Measure the resistance between harness connector and chassis ground. ***Connector & terminal*** ***(B281) No. 1 — Chassis ground:***	Is the resistance less than 10 Ω?	Repair the harness.	Go to step **3**.
3	**CHECK ANTENNA CIRCUIT.** Measure the resistance between harness connector and chassis ground. ***Connector & terminal*** ***(B281) No. 2 — Chassis ground:***	Is the resistance less than 10 Ω?	Repair the harness.	Go to step **4**.
4	**CHECK ANTENNA CIRCUIT.** 1) Turn the ignition switch to ON. (engine OFF) 2) Measure the voltage between harness connector and chassis ground. ***Connector & terminal*** ***(B281) No. 1 (+) — Chassis ground (−):***	Is the voltage 0 V?	Go to step **5**.	Repair the harness.
5	**CHECK ANTENNA CIRCUIT.** Measure the voltage between harness connector and chassis ground. ***Connector & terminal*** ***(B281) No. 2 (+) — Chassis ground (−):***	Is the voltage 0 V?	Go to step **6**.	Repair the harness between body integrated unit and antenna.

	Step	Check	Yes	No
6	**CHECK BODY INTEGRATED UNIT FUNCTION.** 1) Turn the ignition switch to OFF. 2) Connect the harness connector to body integrated unit. 3) Insert the key into the ignition switch, then measure changes in voltage between the antenna harness connectors. ***Connector & terminal*** ***(B281) No. 1 (+) — No. 2 (–):***	Is the voltage –30 — 30 V? (Approx. 0.1 second after inserting the key) Is the voltage 0 V? (Approx. 1 second after inserting the key)	Go to step **7**.	Replace the body integrated unit. <Ref. to SL-72, Body Integrated Unit.> Register all ignition keys (transponders). Refer to the "PC application help for Subaru Select Monitor".
7	**CHECK IGNITION KEY (TRANSPONDER).** 1) Remove the key from ignition switch. 2) Start the engine using other key which is already registered.	Does the engine start?	Register ignition keys (transponders). Refer to the "PC application help for Subaru Select Monitor".	Replace the body integrated unit. <Ref. to SL-72, Body Integrated Unit.> Register all ignition keys (transponders). Refer to the "PC application help for Subaru Select Monitor".

C: DTC P1571 REFERENCE CODE INCOMPATIBILITY

DTC DETECTING CONDITION:

Reference code incompatibility between body integrated unit and ECM

	Step	Check	Yes	No
1	**PERFORM REGISTRATION ON IGNITION KEY.** Perform registration on all keys of the vehicle. Refer to the “PC application help for Subaru Select Monitor”.	Is registration for all keys complete?	Finish the diagnosis.	Go to step **2**.
2	**CHECK FOR ANY OTHER DTC ON DISPLAY.**	Is any other immobilizer DTC displayed?	Check the appropriate DTC using the “List of Diagnostic Trouble Code (DTC)”. <Ref. to IM(diag)-14, List of Diagnostic Trouble Code (DTC).> Execute the registration procedure next. Refer to the “PC application help for Subaru Select Monitor”.	Replace the ECM. <Ref. to FU(H4DOTC)-57, Engine Control Module (ECM).> <Ref. to FU(H6DO)-50, Engine Control Module (ECM).> Replace the body integrated unit. <Ref. to SL-72, Body Integrated Unit.> Replace and register all ignition keys (transponders). Refer to the “PC application help for Subaru Select Monitor”.

D: DTC P1572 IMM CIRCUIT FAILURE (EXCEPT ANTENNA CIRCUIT)

DTC DETECTING CONDITION:

Communication failure between body integrated unit and ECM

WIRING DIAGRAM:

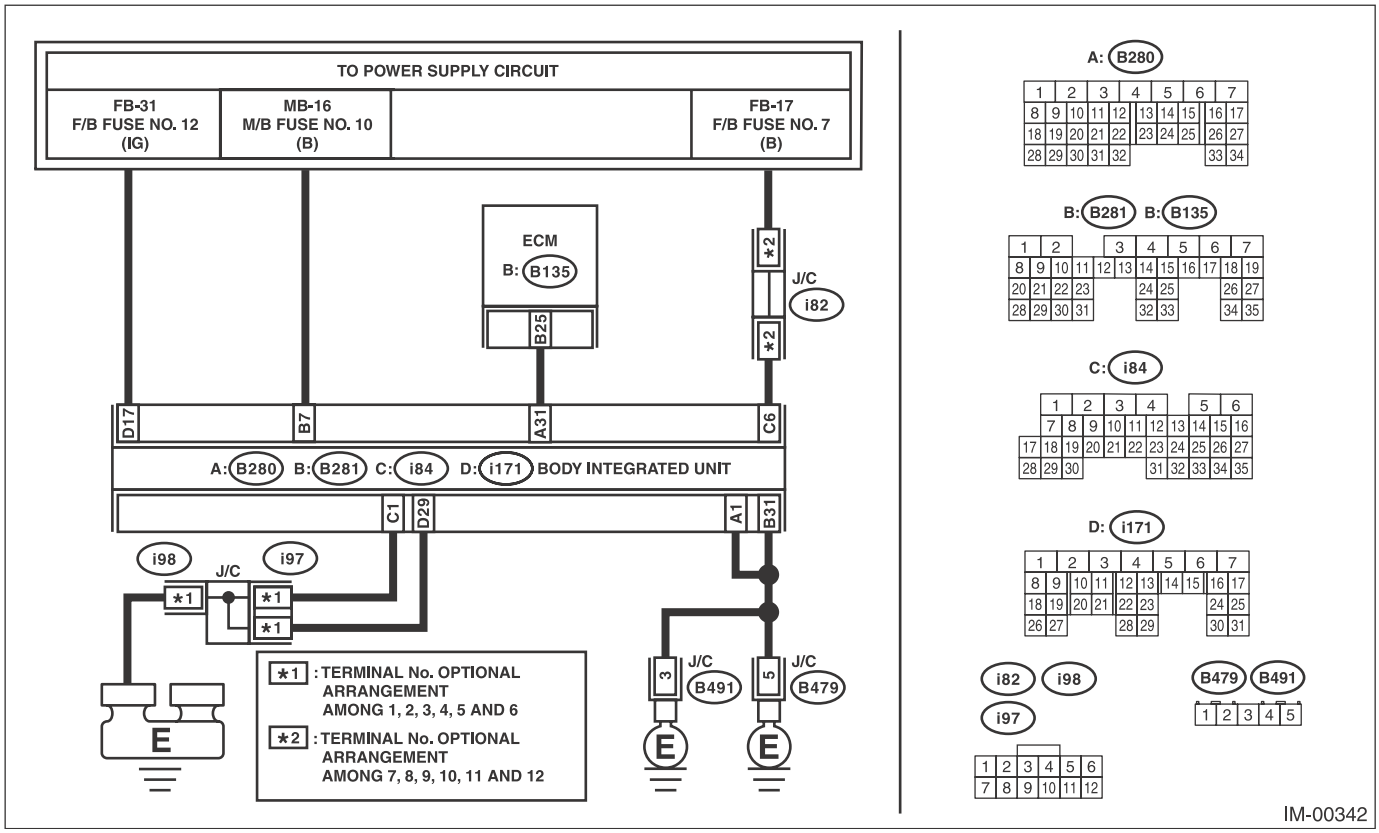

	Step	Check	Yes	No
1	**CHECK LAN COMMUNICATION SYSTEM.** Read the DTC of body integrated unit using Subaru Select Monitor.	Is DTC displayed?	Perform the diagnosis according to DTC.	Go to step **2**.
2	**CHECK BODY INTEGRATED UNIT POWER SUPPLY CIRCUIT.** 1) Turn the ignition switch to OFF. 2) Disconnect the harness connector from body integrated unit. 3) Measure the voltage between the body integrated unit harness connector terminal and chassis ground. ***Connector & terminal*** ***(B281) No. 7 (+) — Chassis ground (–):*** ***(i84) No. 6 (+) — Chassis ground (–):***	Is the voltage 10 V or more?	Go to step **3**.	Check the harness for open or short circuit between body integrated unit and fuse.
3	**CHECK BODY INTEGRATED UNIT POWER SUPPLY CIRCUIT.** 1) Turn the ignition switch to ON. (engine OFF) 2) Measure the voltage between the body integrated unit harness connector terminal and chassis ground. ***Connector & terminal*** ***(i171) No. 17 (+) — Chassis ground (–):***	Is the voltage 10 V or more?	Go to step **4**.	Check the harness for open or short circuit between the body integrated unit and ignition switch.

	Step	Check	Yes	No
4	**CHECK BODY INTEGRATED UNIT GROUND CIRCUIT.** 1) Turn the ignition switch to OFF. 2) Measure the resistance between body integrated unit harness connector terminal and chassis ground. ***Connector & terminal*** ***(B280) No. 1 — Chassis ground:*** ***(B281) No. 31 — Chassis ground:*** ***(i84) No. 1 — Chassis ground:*** ***(i171) No. 29 — Chassis ground:***	Is the resistance less than 10 Ω?	Go to step **5**.	Repair the open circuit of the body integrated unit ground circuit.
5	**CHECK GROUND CIRCUIT FOR ECM.** Measure the resistance between the ECM ground terminal and engine ground.	Is the resistance less than 10 Ω?	Go to step **6**.	Repair ground circuit of ECM.
6	**CHECK HARNESS BETWEEN BODY INTEGRATED UNIT AND ECM.** 1) Disconnect the harness connector from the ECM and body integrated unit. 2) Measure the resistance between body integrated unit harness connector terminal and ECM harness connector terminal. ***Connector & terminal*** ***(B280) No. 31 — (B135) No. 25:***	Is the resistance less than 10 Ω?	Go to step **7**.	Repair the open circuit of the harness between the body integrated unit and ECM.
7	**CHECK COMMUNICATION CIRCUIT HARNESS.** 1) Turn the ignition switch to ON. (engine OFF) 2) Measure the voltage between the body integrated unit harness connector terminal and chassis ground. ***Connector & terminal*** ***(B280) No. 31 (+) — Chassis ground (–):***	Is the voltage 0 V?	Go to step **8**.	Repair the harness between body integrated unit and ECM.
8	**CHECK COMMUNICATION CIRCUIT HARNESS.** Measure the voltage between ECM harness connector terminal and engine ground. ***Connector & terminal*** ***(B135) No. 25 (+) — Engine ground (–):***	Is the voltage 0 V?	Go to step **9**.	Repair the harness between body integrated unit and ECM.
9	**CHECK ECM BY COMMUNICATION LINE CHECK.** 1) Connect the harness connector to ECM only. 2) Start the communication line short check. <Ref. to IM(diag)-8, COMMUNICATION LINE CHECK, OPERATION, Subaru Select Monitor.>	Is the communication line check OK?	Replace the body integrated unit. <Ref. to SL-72, Body Integrated Unit.> Register all ignition keys (transponders). Refer to the “PC application help for Subaru Select Monitor”.	Replace the ECM. <Ref. to FU(H4DOTC)-57, Engine Control Module (ECM).> <Ref. to FU(H6DO)-50, Engine Control Module (ECM).> Perform the registration procedure next. Refer to the “PC application help for Subaru Select Monitor”.

E: DTC P1574 KEY COMMUNICATION FAILURE

DTC DETECTING CONDITION:

Communication failure between key and body integrated unit

	Step	Check	Yes	No
1	**CHECK BODY INTEGRATED UNIT FUNCTION.** Insert the key into the ignition switch (LOCK position), then measure changes in voltage between the antenna connectors. ***Connector & terminal (B415) No. 1 (+) — No. 2 (–):***	Is the voltage –30 — 30 V? (Approx. 0.1 second after inserting the key) Is the voltage 0 V? (Approx. 1 second after inserting the key)	Go to step **2**.	Replace the body integrated unit. <Ref. to SL-72, Body Integrated Unit.> Register all ignition keys (transponders). Refer to the "PC application help for Subaru Select Monitor".
2	**CHECK IGNITION KEY (TRANSPONDER).** 1) Remove the key from ignition switch. 2) Start the engine using other key which is already registered.	Does the engine start?	Register ignition keys (transponders). Refer to the "PC application help for Subaru Select Monitor".	Replace the body integrated unit. <Ref. to SL-72, Body Integrated Unit.> Register all ignition keys (transponders). Refer to the "PC application help for Subaru Select Monitor".

F: DTC P1576 EGI CONTROL MODULE EEPROM

DTC DETECTING CONDITION:

- ECM malfunctioning
- Inaccessible ROM in ECM during key registration.

	Step	Check	Yes	No
1	**PERFORM REGISTRATION ON IGNITION KEY.** Perform registration on all keys of the vehicle. Refer to the "PC application help for Subaru Select Monitor".	Is registration for all keys complete?	Make sure it is possible to start the engine with all keys that have been taught. This completes the work.	Go to step **2**.
2	**PERFORM REGISTRATION ON IGNITION KEY.** Perform registration on all keys of the vehicle. Refer to the "PC application help for Subaru Select Monitor".	Is registration for all keys complete?	Make sure it is possible to start the engine with all keys that have been taught. This completes the work.	Go to step **3**.
3	**PERFORM REGISTRATION ON IGNITION KEY.** Perform registration on all keys of the vehicle. Refer to the "PC application help for Subaru Select Monitor".	Is registration for all keys complete?	Make sure it is possible to start the engine with all keys that have been taught. This completes the work.	Replace the ECM. <Ref. to FU(H4DOTC)-57, Engine Control Module (ECM).> <Ref. to FU(H6DO)-50, Engine Control Module (ECM).>

G: DTC P1577 IMM CONTROL MODULE EEPROM

DTC DETECTING CONDITION:

- Body integrated unit malfunctioning
- Failed to access ROM inside the body integrated unit.

Step		Check	Yes	No
1	**PERFORM REGISTRATION ON IGNITION KEY.** Perform registration on all keys of the vehicle. Refer to the “PC application help for Subaru Select Monitor”.	Is registration for all keys complete?	Make sure it is possible to start the engine with all keys that have been taught. This completes the work.	Go to step **2**.
2	**PERFORM REGISTRATION ON IGNITION KEY.** Perform registration on all keys of the vehicle. Refer to the “PC application help for Subaru Select Monitor”.	Is registration for all keys complete?	Make sure it is possible to start the engine with all keys that have been taught. This completes the work.	Go to step **3**.
3	**PERFORM REGISTRATION ON IGNITION KEY.** Perform registration on all keys of the vehicle. Refer to the “PC application help for Subaru Select Monitor”.	Is registration for all keys complete?	Make sure it is possible to start the engine with all keys that have been taught. This completes the work.	Replace the body integrated unit. <Ref. to SL-72, Body Integrated Unit.> Register all ignition keys (transponders). Refer to the “PC application help for Subaru Select Monitor”.

H: DTC P1578 METER FAILURE

DTC DETECTING CONDITION:

- Except Canada models

Reference code incompatibility between combination meter and body integrated unit or communication failure between body integrated unit and ECM

- Canada models

Reference code incompatibility between security control module and body integrated unit or communication failure between body integrated unit and ECM

	Step	Check	Yes	No
1	**CHECK DIAGNOSTIC TROUBLE CODE (DTC).** Read the DTC of body integrated unit using Subaru Select Monitor.	Is any of DTC B1401, B1405 and B1406 detected?	Go to step **2**.	<Ref. to IM(diag)-20, DTC P1572 IMM CIRCUIT FAILURE (EXCEPT ANTENNA CIRCUIT), Diagnostic Procedure with Diagnostic Trouble Code (DTC).>
2	**CHECK LAN COMMUNICATION SYSTEM.** Inspect LAN communication system. <Ref. to LAN(diag)-2, Basic Diagnostic Procedure.>	Is DTC U1201, U1202, B1100 or B1101 of the body integrated unit displayed?	Perform the diagnosis according to DTC. <Ref. to LAN(diag)-31, List of Diagnostic Trouble Code (DTC).>	Go to step **3**.
3	**CHECK DIAGNOSTIC TROUBLE CODE (DTC).** Perform inspection for the diagnosis trouble code detected in step 1.	Is DTC B1401 detected?	Go to step **4**.	Perform the diagnosis for DTC B1405 or B1406.
4	**CHECK COMBINATION METER.** Perform the registration of immobilizer. Refer to the “PC application help for Subaru Select Monitor”.	Is the immobilizer registration achieved?	Go to step **5**.	Replace the combination meter and perform the registration of immobilizer again.
5	**CHECK ENGINE START.** Start the engine.	Does the engine start?	System is normal.	Replace the combination meter, perform the registration of immobilizer again and check that the engine starts normally.

I: DTC B1401 M COLLATION NG

NOTE:
Refer to DTC P1578 "Meter Failure" for diagnostic procedure. <Ref. to IM(diag)-24, DTC P1578 METER FAILURE, Diagnostic Procedure with Diagnostic Trouble Code (DTC).>

J: DTC B1402 IMMOBILIZER KEY COLLATION NG

NOTE:
Refer to the following inspections for diagnostic procedure.

- DTC P0513 "Incorrect Immobilizer Key"<Ref. to IM(diag)-16, DTC P0513 INCORRECT IMMOBILIZER KEY, Diagnostic Procedure with Diagnostic Trouble Code (DTC).>
- DTC P1570 "Antenna"<Ref. to IM(diag)-17, DTC P1570 ANTENNA, Diagnostic Procedure with Diagnostic Trouble Code (DTC).>
- DTC P1574 "Key Communication Failure"<Ref. to IM(diag)-22, DTC P1574 KEY COMMUNICATION FAILURE, Diagnostic Procedure with Diagnostic Trouble Code (DTC).>

K: DTC B1403 E/G REQUEST NG

NOTE:
Refer to DTC P1572 "IMM Circuit Failure (Except Antenna Circuit)" for diagnostic procedure. <Ref. to IM(diag)-20, DTC P1572 IMM CIRCUIT FAILURE (EXCEPT ANTENNA CIRCUIT), Diagnostic Procedure with Diagnostic Trouble Code (DTC).>

L: DTC B1405 SCU COLLATION NG

DTC DETECTING CONDITION:
Reference code incompatibility between security control module and body integrated unit

Step		Check	Yes	No
1	**CHECK SCM COLLATION MODE.** Using Subaru Select Monitor, perform the function check «SCM Collation Mode» for the body integrated unit. <Ref. to BC(diag)-23, OPERATION, Function Check.>	Is there any malfunction?	Make sure it is possible to start the engine with all keys. This completes the work.	Perform the diagnosis according to the Select Monitor display.

M: DTC B1406 SCU_EEPROM_NG

DTC DETECTING CONDITION:

- Defective security control module
- ROM of security control module cannot be accessed

	Step	Check	Yes	No
1	**PERFORM REGISTRATION ON IGNITION KEY.** Perform registration on all keys of the vehicle. Refer to the “PC application help for Subaru Select Monitor”.	Is registration for all keys complete?	Make sure it is possible to start the engine with all keys that have been taught. This completes the work.	Go to step **2**.
2	**PERFORM REGISTRATION ON IGNITION KEY.** Perform registration on all keys of the vehicle. Refer to the “PC application help for Subaru Select Monitor”.	Is registration for all keys complete?	Make sure it is possible to start the engine with all keys that have been taught. This completes the work.	Go to step **3**.
3	**PERFORM REGISTRATION ON IGNITION KEY.** Perform registration on all keys of the vehicle. Refer to the “PC application help for Subaru Select Monitor”.	Is registration for all keys complete?	Make sure it is possible to start the engine with all keys that have been taught. This completes the work.	Replace the security control module. <Ref. to SL-66, Security Control Module.> Register all ignition keys (transponders). Refer to the “PC application help for Subaru Select Monitor”.

LAN SYSTEM (DIAGNOSTICS)

LAN(diag)

		Page
1.	Basic Diagnostic Procedure	2
2.	Check List for Interview	3
3.	General Description	4
4.	Electrical Component Location	6
5.	Control Module I/O Signal	8
6.	Subaru Select Monitor	9
7.	Read Diagnostic Trouble Code (DTC)	10
8.	Clear Memory Mode	11
9.	CAN Communication Circuit Check	12
10.	List of Diagnostic Trouble Code (DTC)	31
11.	Diagnostic Procedure with Diagnostic Trouble Code (DTC)	47
12.	General Diagnostic Table	81

1. Basic Diagnostic Procedure

A: PROCEDURE

CAUTION:
• Subaru Select Monitor is required for reading DTC, performing diagnosis, reading current data, customizing and active test (compulsory drive).
• Remove foreign matter (dust, water, oil, etc.) from each control module connector during removal and installation.
• For model with immobilizer or model with keyless access, registration of immobilizer may be needed after the replacement of controller etc. For details, refer to the "PC application help for Subaru Select Monitor".

NOTE:
• To check harness for open or short circuits, shake the suspected trouble spot or connector.
• Check List for Interview <Ref. to LAN(diag)-3, Check List for Interview.>

	Step	Check	Yes	No
1	**CHECK PRE-INSPECTION.** Ask the customer when and how the trouble occurred using the interview check list. <Ref. to LAN(diag)-3, Check List for Interview.>	Did you interview the customer?	Go to step **2**.	Interview the customer.
2	**BASIC INSPECTION.** Check components which might affect CAN communication problem. <Ref. to LAN(diag)-4, INSPECTION, General Description.>	Is the component that might affect CAN communication problem normal?	Go to step **3**.	Repair or replace each component.
3	**CHECK DTC.** 1) Start the engine and read all DTCs. NOTE: • When the engine does not start, perform the diagnosis for the engine start malfunction. <Ref. to EN(H4SO)(diag)-66, Diagnostics for Engine Starting Failure.> • If the communication function of the Subaru Select Monitor cannot be executed properly, check the communication circuit. <Ref. to LAN(diag)-47, COMMUNICATION FOR INITIALIZING IMPOSSIBLE, Diagnostic Procedure with Diagnostic Trouble Code (DTC).> 2) Record all DTCs and freeze frame data.	Is DTC regarding CAN communication displayed on Subaru Select Monitor?	Go to step **5**.	Go to step **4**.
4	**PERFORM GENERAL DIAGNOSTICS.** Inspect using "General Diagnostics Table". <Ref. to LAN(diag)-81, General Diagnostic Table.>	Is result of inspection OK?	LAN system is normal.	Go to step **5**.
5	**PERFORM DIAGNOSIS.** 1) Correct the cause of trouble. 2) Perform the Clear Memory Mode. <Ref. to LAN(diag)-11, OPERATION, Clear Memory Mode.> 3) Read the DTC. <Ref. to LAN(diag)-10, OPERATION, Read Diagnostic Trouble Code (DTC).>	Is DTC displayed on Subaru Select Monitor?	Repeat step 5 until DTC is not shown.	Finish the diagnosis.

2. Check List for Interview

A: CHECK

Inspect the following item about the vehicle's state.

1. DISPLAY STATUS OF FAILURE INFORMATION

Ignition position	❑ OFF ❑ ACC ❑ ON (before starting engine) ❑ START ❑ ON (after starting engine, engine is running) ❑ ON (after starting engine, engine is at a standstill)
Timing	❑ Immediately after turning the ignition ON. ❑ Immediately after turning the ignition to START.

2. DISPLAY STATUS IN THE COMBINATION METER

Display status in the combination meter	Engine coolant temperature gauge display	❑ OK / ❑ NG
	Fuel gauge display	❑ OK / ❑ NG
Display of other indicators	Malfunction indicator light	❑ ON / ❑ OFF
	SPORT indicator light (AT warning light)	❑ ON / ❑ OFF
	ABS warning light/Vehicle dynamics control (VDC) warning light	❑ ON / ❑ OFF
	Immobilizer indicator light	❑ ON / ❑ Blink / ❑ OFF

3. CONDITIONS UNDER WHICH TROUBLE OCCURS

Driving condition	❑ At standstill (While idling) ❑ When the vehicle is running Vehicle speed km/h (MPH) ❑ While accelerating Acceleration km/h (MPH) to km/h (MPH) ❑ Decelerating (With braking) Deceleration km/h (MPH) to km/h (MPH) ❑ Decelerating (Without braking) Deceleration km/h (MPH) to km/h (MPH)
	❑ Flat road ❑ Uphill ❑ Downhill ❑ Gravel road ❑ Bumpy road ❑ Snowy road
	Does it occur when operating any part? Operated part: **TROUBLE SYMPTOM:**
	Are there any other troubles occurred? From where: **TROUBLE SYMPTOM:**

3. General Description

A: CAUTION

1. SUPPLEMENTAL RESTRAINT SYSTEM "AIRBAG"

Airbag system wiring harness is routed near the body integrated unit and twisted pair line.

CAUTION:
• Do not use the electrical test equipment on all airbag system wiring harnesses and connectors.
• Be careful not to damage the airbag system wiring harness when servicing the body integrated unit and LAN system.

2. LAN SYSTEM

• Bus line of LAN system is twisted pair line. Be careful not to by-pass or partly unbind the twisted pair line.
• Do not make clearance between bus lines (CAN High, CAN Low).
• Difference of bus line length should be within 10 cm (3.94 in).
• Fray near the connector should be within 8 cm (3.14 in).

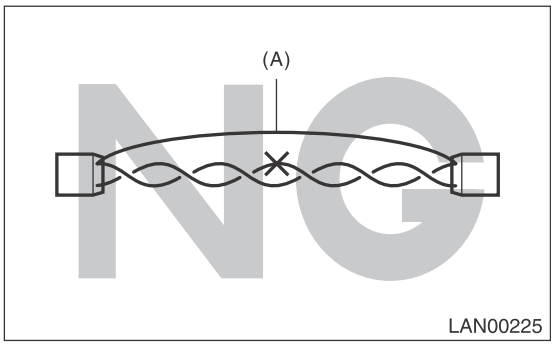

(A) Bypass wire connection

• If the characteristics of the twisted pair line are changed, it may extremely weaken against noise.
• When repairing the harness, connect the wires using soldering and protect it with insulating tape etc.

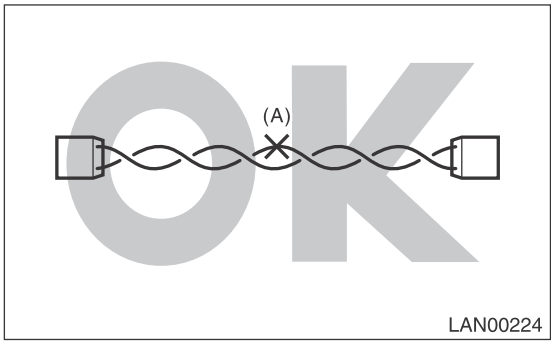

(A) Soldering and protection with insulating tape

B: INSPECTION

Before performing diagnostics, check the following item which might affect body integrated unit malfunctions.
1) Measure the battery voltage and check electrolyte.

Standard voltage: 12 V or more

Specific gravity: 1.260 or more
2) Check the fuse condition.
Make sure that ampere of the fuse is setting value, and it is not blown out.
3) Check the connecting condition of harness and harness connector.
4) Confirm settings of body integrated unit are corresponded to vehicle equipment. <Ref. to BC(diag)-19, OPERATION, Registration Body Integrated Unit.>
5) Make sure that the User Customizing of the body integrated unit matches the vehicle equipment. <Ref. to BC(diag)-17, OPERATION, User Customizing.>
6) Confirm "Factory initial setting" of body integrated unit registrations is set to "Market".
7) Confirm key illumination does not blink with ignition switch turned to ON.

C: PREPARATION TOOL

1. SPECIAL TOOL

ILLUSTRATION	TOOL NUMBER	DESCRIPTION	REMARKS
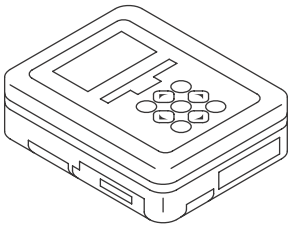 ST1B022XU0	1B022XU0	SUBARU SELECT MONITOR III KIT	Used for troubleshooting the electrical system.

2. GENERAL TOOL

TOOL NAME	REMARKS
Circuit tester	Used for measuring resistance, voltage and current.

4. Electrical Component Location

A: LOCATION

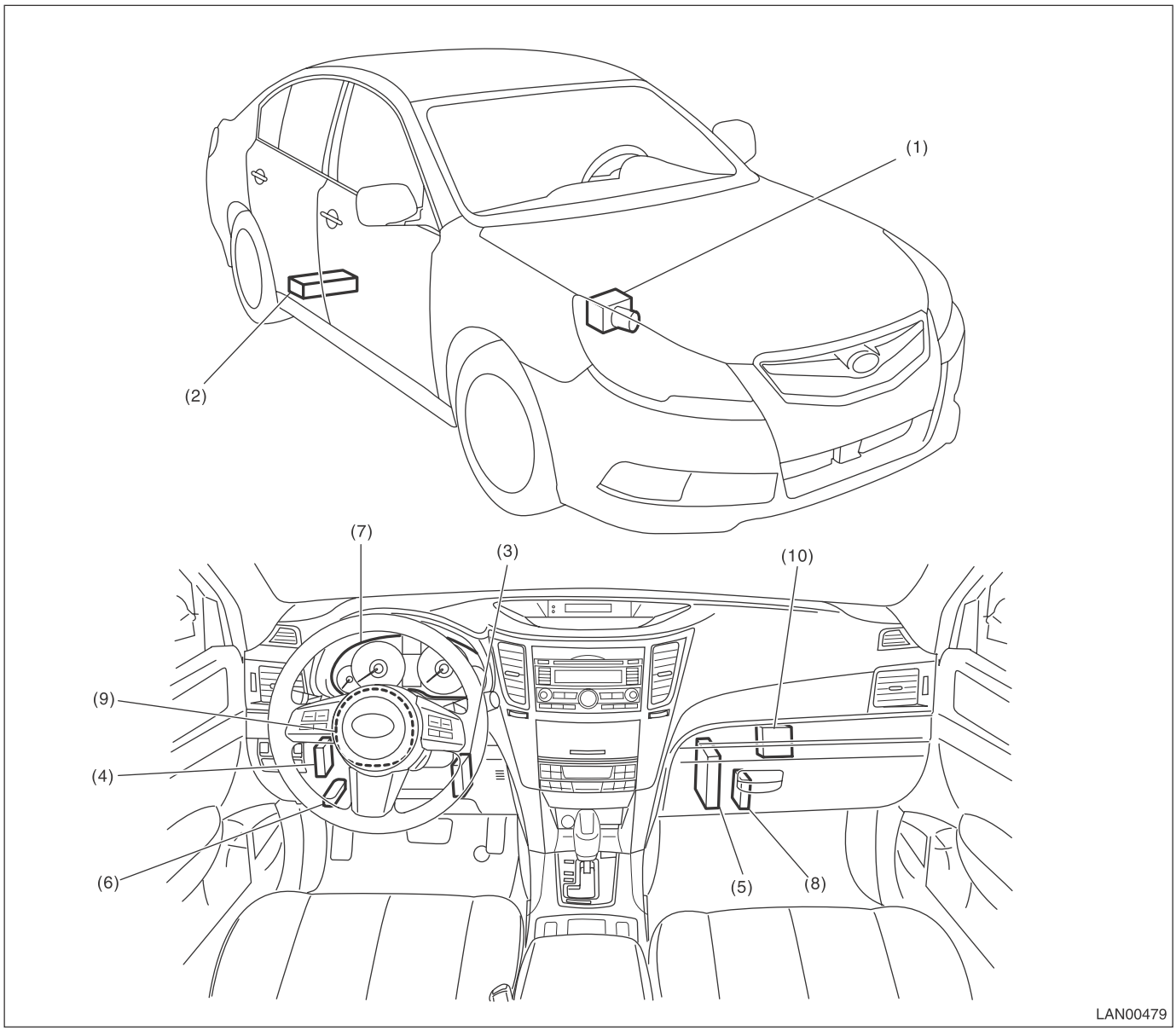

(1)	ABSCM&H/U or VDCCM&H/U(inside engine room)	(5)	Engine control module	(9)	Steering angle sensor
(2)	Electronic parking CM	(6)	Data link connector	(10)	Security CM
(3)	Body integrated unit	(7)	Combination meter		
(4)	Transmission control module (AT)	(8)	A/C CM		

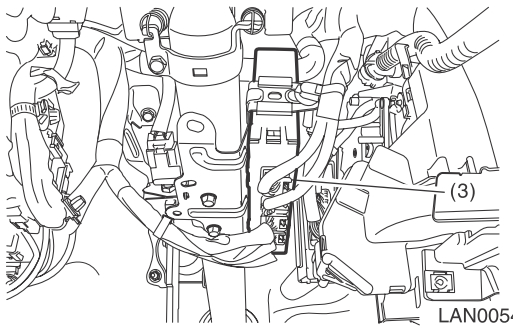
(3)
LAN00544

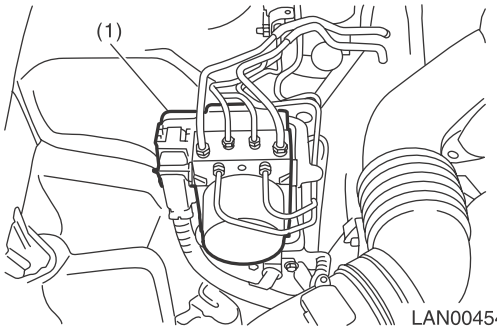
(1)
LAN00454

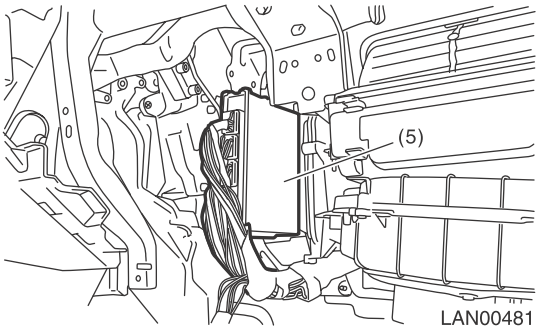
(5)
LAN00481

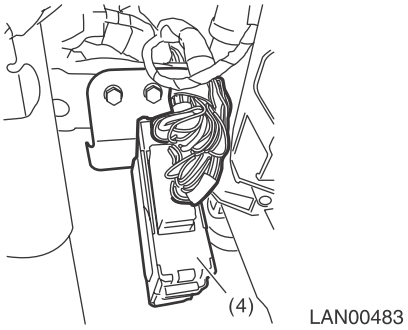
(4)
LAN00483

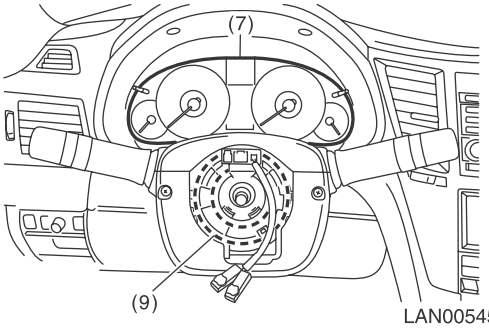
(7)
(9)
LAN00545

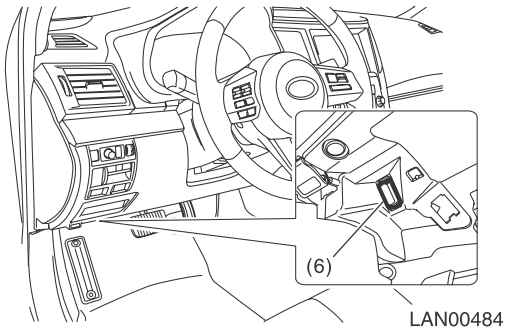
(6)
LAN00484

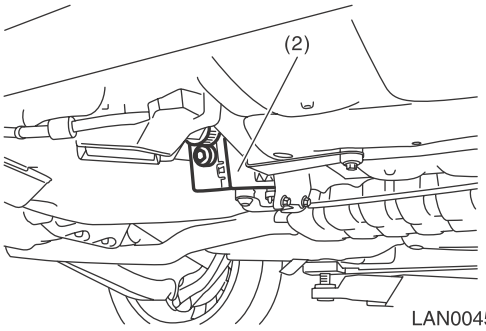
(2)
LAN00459

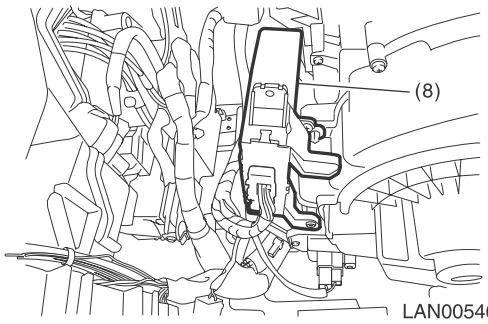
(8)
LAN00546

5. Control Module I/O Signal

A: ELECTRICAL SPECIFICATION

- Body integrated unit

For I/O signals of the body integrated unit unit, refer to Body Control (Diagnostics). <Ref. to BC(diag)-7, Control Module I/O Signal.>

- Engine control module

For I/O signals of ECM, refer to Engine (Diagnostics). <Ref. to EN(H4SO)(diag)-18, Engine Control Module (ECM) I/O Signal.> <Ref. to EN(H4DOTC)(diag)-19, Engine Control Module (ECM) I/O Signal.> <Ref. to EN(H6DO)(diag)-18, Engine Control Module (ECM) I/O Signal.>

- Transmission control module

For I/O signals of TCM, refer to Automatic Transmission (Diagnostics). <Ref. to 5AT(diag)-13, Transmission Control Module (TCM) I/O Signal.> <Ref. to CVT(diag)-11, Transmission Control Module (TCM) I/O Signal.>

- VDC control module

For I/O signals of VDC CM, refer to Vehicle Dynamics Control (Diagnostics). <Ref. to VDC(diag)-12, Control Module I/O Signal.>

- Electronic parking CM

For I/O signals of electronic CM, refer to Parking Brake (Diagnostics). <Ref. to PB(diag)-12, Control Module I/O Signal.>

- A/C CM

For unit I/O signals of A/C CM, refer to HVAC System (Diagnostics). <Ref. to AC(diag)-11, Auto A/C Control Module I/O Signal.>

- Combination meter

For I/O signals of combination meter, refer to Combination Meter System. <Ref. to WI-81, WIRING DIAGRAM, Combination Meter System.>

- Data link connector

For I/O signals of data link connector, refer to Engine (Diagnostics). <Ref. to EN(H4SO)(diag)-29, Data Link Connector.> <Ref. to EN(H4DOTC)(diag)-31, Data Link Connector.> <Ref. to EN(H6DO)(diag)-28, Data Link Connector.>

* CAN sleep state:

Hold on for approx. one minute with ignition OFF and the doors, trunk, rear gate all closed.

B: WIRING DIAGRAM

<Ref. to WI-69, WIRING DIAGRAM, CAN Communication System.>

6. Subaru Select Monitor

A: OPERATION

For details of basic operations, refer to “PC application help for Subaru Select Monitor”.

7. Read Diagnostic Trouble Code (DTC)

A: OPERATION

For details of operation procedures, refer to “PC application help for Subaru Select Monitor”.

8. Clear Memory Mode

A: OPERATION

For details of operation procedures, refer to “PC application help for Subaru Select Monitor”.

9. CAN Communication Circuit Check

A: PROCEDURE

NOTE:
When measuring the resistance of CAN communication circuit, measure the CAN communication circuit in the sleep status.
To set the sleep status
- Turn the ignition switch to OFF, stop operating the keys or switches, and wait for one minute or more with all doors and trunk/rear gate closed.
- For the models with keyless access, keep the access key 2 m or more away from vehicle.

	Step	Check	Yes	No
1	**CHECK FROM DATA LINK CONNECTOR.** Using the tester, measure the resistance between terminals. ***Connector & terminal*** ***(B40) No. 6 — Chassis ground:*** ***(B40) No. 14 — Chassis ground:***	Is the resistance 10 Ω or less?	Check for ground short. <Ref. to LAN(diag)-14, GROUND SHORT INSPECTION, INSPECTION, CAN Communication Circuit Check.>	Go to step **2**.
2	**CHECK FROM DATA LINK CONNECTOR.** 1) Turn the ignition switch to ON. 2) Using the tester, measure the voltage between terminals. ***Connector & terminal*** ***(B40) No. 6 — Chassis ground:*** ***(B40) No. 14 — Chassis ground:***	Is the voltage 5 V or less?	Go to step **3**.	Check for battery short. <Ref. to LAN(diag)-16, BATTERY SHORT INSPECTION, INSPECTION, CAN Communication Circuit Check.>
3	**CHECK FROM DATA LINK CONNECTOR.** 1) Turn the ignition switch to OFF. 2) Using the tester, measure the resistance between terminals. ***Connector & terminal*** ***(B40) No. 6 — No. 14:***	Is the resistance 55 Ω or less?	Perform the inspection for 55 Ω or less. <Ref. to LAN(diag)-20, 55 Ω OR LESS, INSPECTION, CAN Communication Circuit Check.>	Go to step **4**.
4	**CHECK FROM DATA LINK CONNECTOR.** Using the tester, measure the resistance between terminals. ***Connector & terminal*** ***(B40) No. 6 — No. 14:***	Is the resistance 65 Ω or more?	Perform the inspection for 65 Ω or more. <Ref. to LAN(diag)-22, 65 Ω OR MORE, INSPECTION, CAN Communication Circuit Check.>	A related line may be open. Perform the inspection for 56 — 64 Ω relevant to the detected DTC. <Ref. to LAN(diag)-13, LIST, CAN Communication Circuit Check.>

B: LIST

Resistance value between CAN Hi And Lo	Contents of inspection	Remarks
Ground short inspection	<Ref. to LAN(diag)-14, GROUND SHORT INSPECTION, INSPECTION, CAN Communication Circuit Check.>	Shorted to ground in the communication circuit or control module.
Battery short inspection	<Ref. to LAN(diag)-16, BATTERY SHORT INSPECTION, INSPECTION, CAN Communication Circuit Check.>	Shorted to battery power supply in the communication circuit or control module.
56 — 64 Ω	<Ref. to LAN(diag)-18, 56 — 64 Ω, INSPECTION, CAN Communication Circuit Check.>	Combined resistance of end resistance does not have malfunction; short to ground or +B short of the CAN communication circuit is possible, however.
55 Ω or less	<Ref. to LAN(diag)-20, 55 Ω OR LESS, INSPECTION, CAN Communication Circuit Check.>	Resistance is lower than combined resistance of end resistance. Short to CAN Hi and CAN Lo on the CAN communication circuit is possible.
65 Ω or more	<Ref. to LAN(diag)-22, 65 Ω OR MORE, INSPECTION, CAN Communication Circuit Check.>	Resistance is higher than combined resistance of end resistance. Open circuit of CAN communication circuit is possible.
56 — 64 Ω (TCM)	<Ref. to LAN(diag)-24, 56 — 64 Ω (TCM), INSPECTION, CAN Communication Circuit Check.>	No TCM data is received. Perform inspection when faulty is detected.
56 — 64 Ω (Steering angle sensor)	<Ref. to LAN(diag)-26, RELATED LINES 56 — 64 Ω (STEERING ANGLE SENSOR), INSPECTION, CAN Communication Circuit Check.>	No other data is received. Perform inspection when faulty is not detected.
56 — 64 Ω (A/C CM)	<Ref. to LAN(diag)-27, 56 — 64 Ω (A/C CM), INSPECTION, CAN Communication Circuit Check.>	No A/C data is received. Perform inspection when faulty is detected.
56 — 64 Ω (Electronic parking CM)	<Ref. to LAN(diag)-28, 56 — 64 Ω (ELECTRONIC PARKING CM), INSPECTION, CAN Communication Circuit Check.>	No EPB data is received. Perform inspection when faulty is detected.
56 — 64 Ω (Combination meter)	<Ref. to LAN(diag)-29, 56 — 64 Ω (COMBINATION METER), INSPECTION, CAN Communication Circuit Check.>	No meter data is received. Perform inspection when faulty is detected.
56 — 64 Ω (Security CM)	<Ref. to LAN(diag)-30, 56 — 64 Ω (SECURITY CM), INSPECTION, CAN Communication Circuit Check.>	No security CM data is received. Perform inspection when faulty is detected.

C: INSPECTION

1. GROUND SHORT INSPECTION

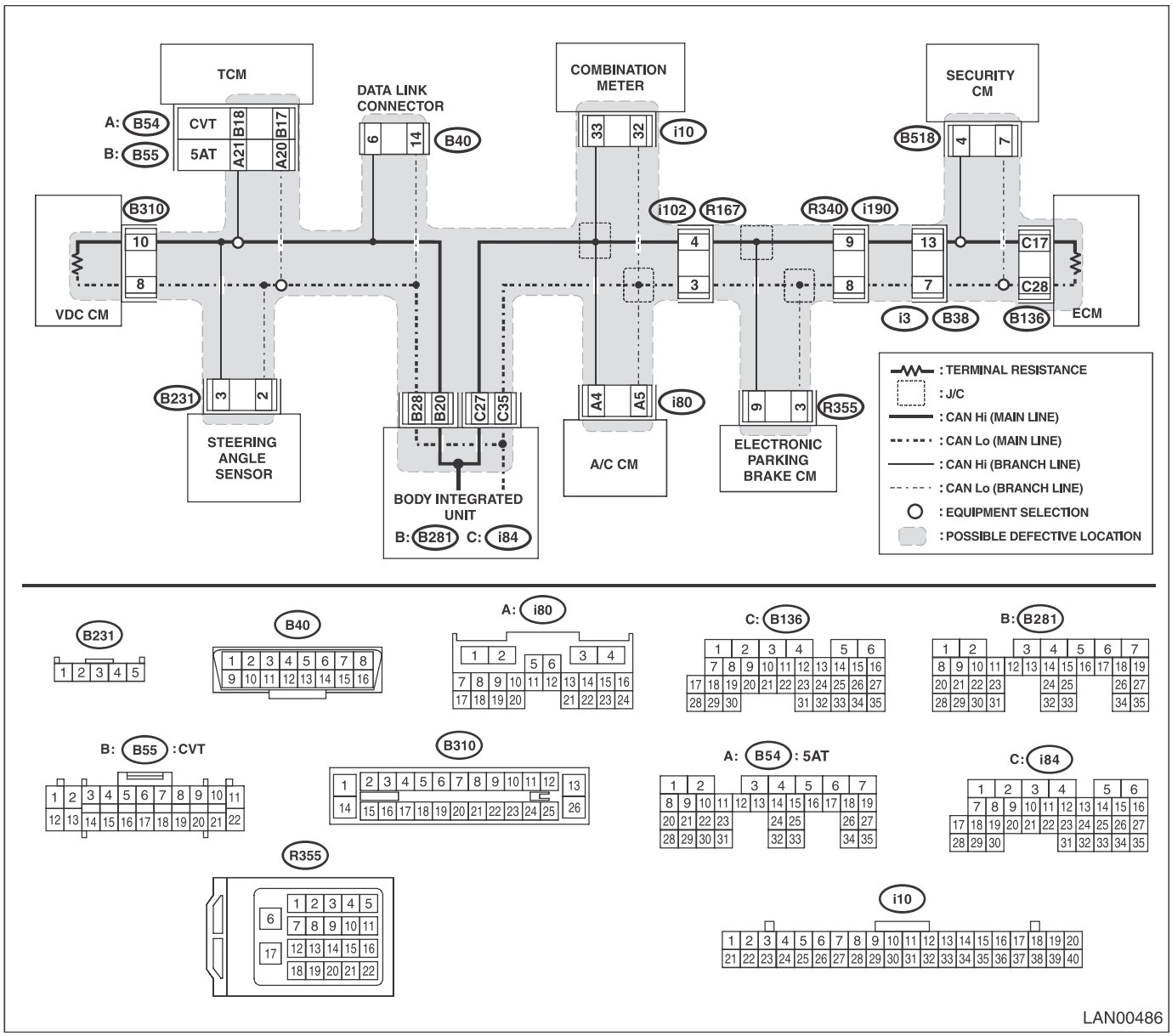

NOTE:
Main wiring harness or related lines may be shorted to ground, or shorted to ground in one of the control modules.

Step		Check	Yes	No
1	**CHECK BETWEEN RELATED LINES AND MAIN WIRING HARNESS.** Using the tester, measure the resistance between terminals. ***Connector & terminal*** ***(B40) No. 6 — Chassis ground:*** ***(B40) No. 14 — Chassis ground:***	Is the resistance 10 Ω or less?	Go to step **2**.	Currently, it is normal.

Step		Check	Yes	No
2	**CHECK CONTROL MODULE.** With the tester connected, disconnect control module. NOTE: Disconnect the body integrated unit at the end. ***Connector & terminal*** ***(B40) No. 6 — Chassis ground:*** ***(B40) No. 14 — Chassis ground:***	Did the resistance change to 10 Ω or more?	Replace the control module whose resistance has changed. When the value changed at disconnecting the body integrated unit, go to next. Go to step **3**.	Go to step **3**.
3	**CHECK BETWEEN MAIN WIRING HARNESSES.** Using the tester, measure the resistance between terminals. ***Connector & terminal*** ***(i84) No. 27 — Chassis ground:*** ***(i84) No. 35 — Chassis ground:***	Is the resistance 10 Ω or less?	Repair or replace the short circuit of the harness.	Replace the body integrated unit. <Ref. to SL-72, REMOVAL, Body Integrated Unit.>

2. BATTERY SHORT INSPECTION

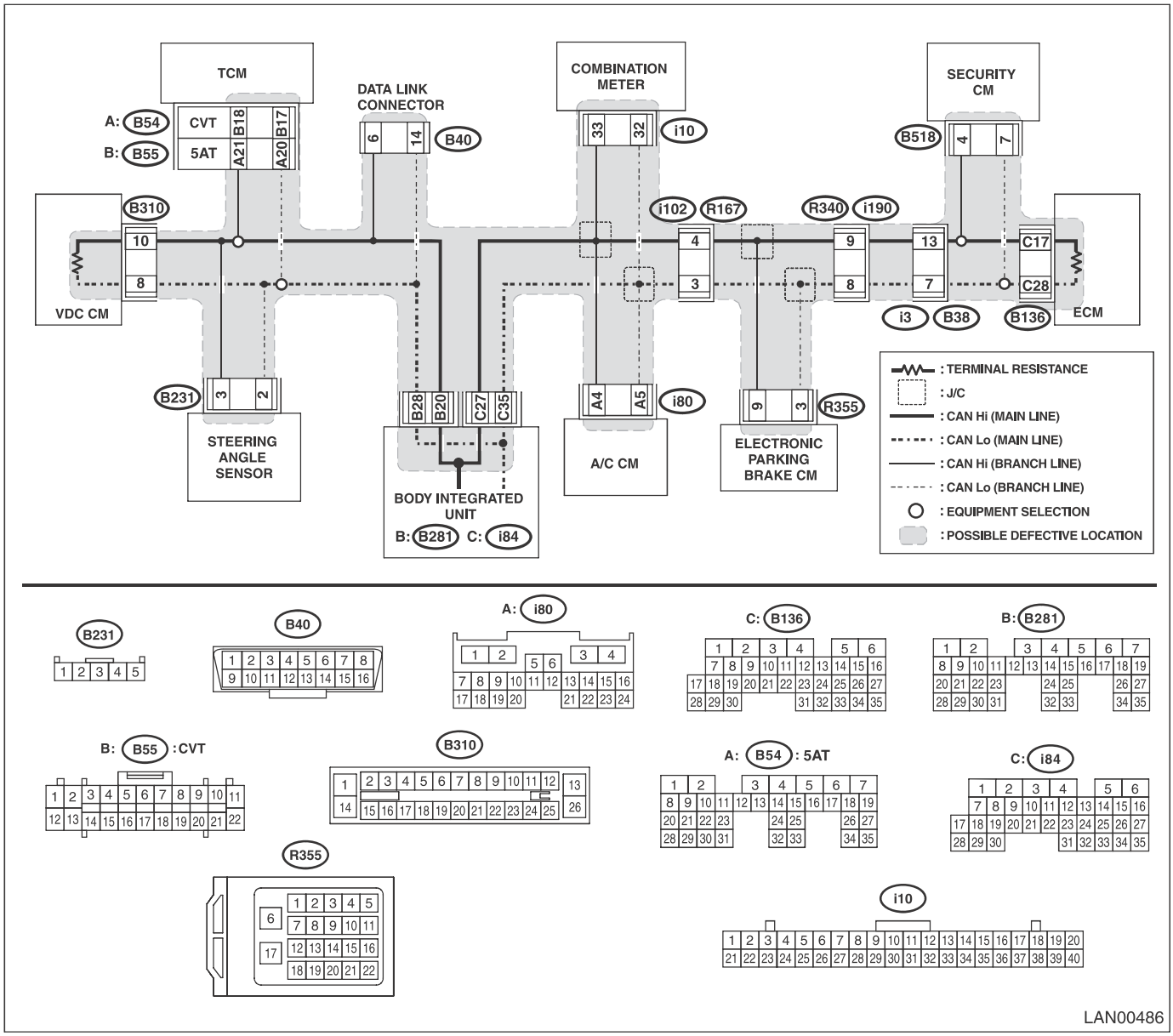

NOTE:
Main wiring harness or related lines may be shorted to battery circuit, or shorted to battery circuit in one of the control modules.

Step		Check	Yes	No
1	**CHECK BETWEEN RELATED LINES AND MAIN WIRING HARNESS.** 1) Turn the ignition switch to ON. 2) Using the tester, measure the voltage between terminals. ***Connector & terminal*** ***(B40) No. 6 — Chassis ground:*** ***(B40) No. 14 — Chassis ground:***	Is the resistance 5 V or less?	Currently returned to normal.	Go to step **2**.

	Step	Check	Yes	No
2	**CHECK CONTROL MODULE.** With the tester connected, disconnect control module. NOTE: Disconnect the body integrated unit at the end. ***Connector & terminal*** ***(B40) No. 6 — Chassis ground:*** ***(B40) No. 14 — Chassis ground:***	Did the voltage change to 5 V or less?	Replace the control module whose voltage has changed. When the value changed at disconnecting the body integrated unit, go to next. Go to step **3**.	Go to step **3**.
3	**CHECK BETWEEN MAIN WIRING HARNESSES.** Using the tester, measure the resistance between terminals. ***Connector & terminal*** ***(i84) No. 27 — Chassis ground:*** ***(i84) No. 35 — Chassis ground:***	Is the voltage 1 V or less?	Replace the body integrated unit. <Ref. to SL-72, REMOVAL, Body Integrated Unit.>	Repair or replace the short circuit of the harness.

3. 56 — 64 Ω

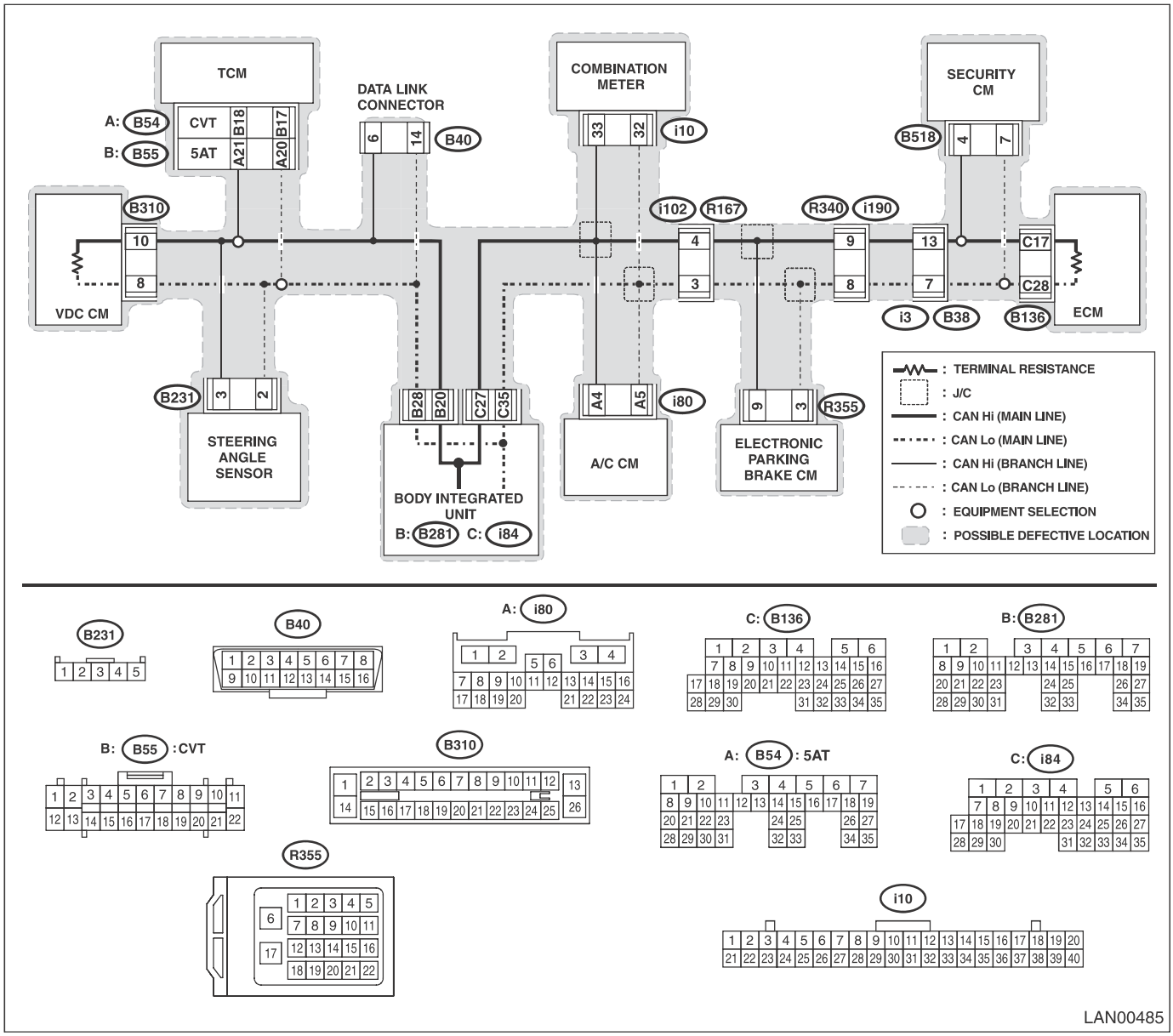

NOTE:
When the measured resistance value is 56 — 64 Ω, main wiring harness or related lines may be shorted to ground, or shorted to power supply line, or related line may be open.

Step		Check	Yes	No
1	**CHECK BETWEEN RELATED LINES AND MAIN WIRING HARNESS.** Using the tester, measure the resistance between terminals. ***Connector & terminal*** ***(B40) No. 6 — Chassis ground:*** ***(B40) No. 14 — Chassis ground:***	Is the resistance 10 Ω or less?	Go to step **2.**	Go to step **4.**

	Step	Check	Yes	No
2	**CHECK CONTROL MODULE.** With the tester connected, disconnect control module. NOTE: Disconnect the body integrated unit at the end. ***Connector & terminal*** ***(B40) No. 6 — Chassis ground:*** ***(B40) No. 14 — Chassis ground:***	Did the resistance change to 10 Ω or more?	Replace the control module whose resistance has changed. When the value changed at disconnecting the body integrated unit, go to next. Go to step **3**.	Repair or replace the short circuit of the harness.
3	**CHECK MAIN WIRING HARNESS AND RELATED LINES.** Using the tester, measure the resistance between terminals. ***Connector & terminal*** ***(i84) No. 27 — Chassis ground:*** ***(i84) No. 35 — Chassis ground:***	Is the resistance 10 Ω or less?	Repair or replace the short circuit of the harness.	Replace the body integrated unit. <Ref. to SL-72, REMOVAL, Body Integrated Unit.>
4	**CHECK BETWEEN RELATED LINES AND MAIN WIRING HARNESS.** 1) Turn the ignition switch to ON. 2) Using the tester, measure the voltage between terminals. ***Connector & terminal*** ***(B40) No. 6 — Chassis ground:*** ***(B40) No. 14 — Chassis ground:***	Is the voltage 5 V or less?	CAN communication circuit is normal.	Go to step **5**.
5	**CHECK CONTROL MODULE.** With the tester connected, disconnect control module. NOTE: Disconnect the body integrated unit at the end. ***Connector & terminal*** ***(B40) No. 6 — Chassis ground:*** ***(B40) No. 14 — Chassis ground:***	Did the voltage change to 5 V or less?	Replace the control module whose voltage has changed. When the value changed at disconnecting the body integrated unit, go to next. Go to step **6**.	Repair or replace the short circuit of the harness.
6	**CHECK HARNESS.** Using a tester, measure the voltage between terminals and chassis ground. ***Connector & terminal*** ***(i84) No. 27 — Chassis ground:*** ***(i84) No. 35 — Chassis ground:***	Is the voltage 5 V or less?	Replace the body integrated unit. <Ref. to SL-72, REMOVAL, Body Integrated Unit.>	Repair or replace the short circuit of the harness.

4. 55 Ω OR LESS

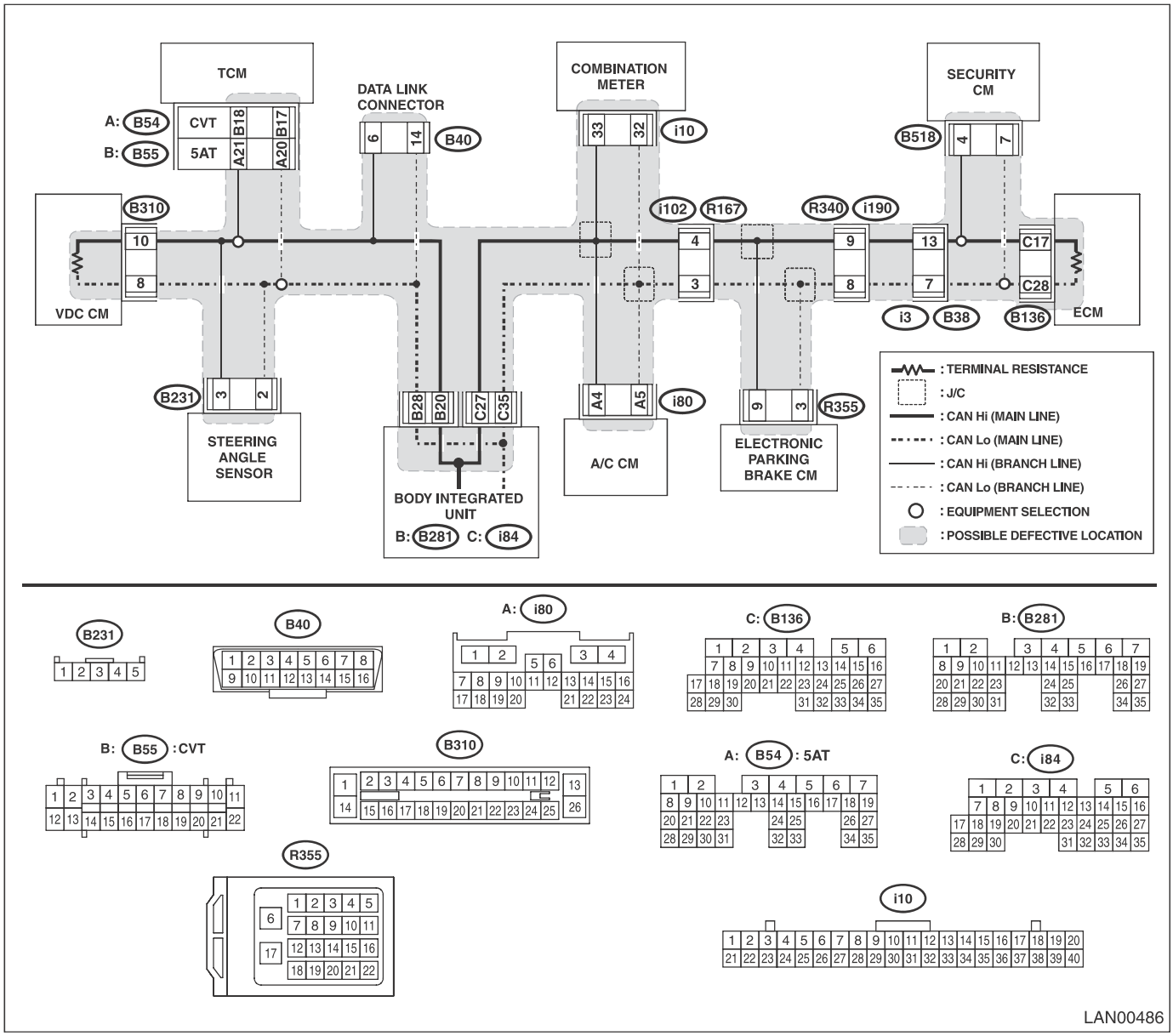

NOTE:
When the bus line is measured, combined resistance of end resistance (120 Ω) in ECM and end resistance (120 Ω) in VDC CM can be measured. The combined resistance is approximately 56 — 64 Ω. When the measured resistance value is 55 Ω or less, main wiring harness or related lines may be shorted, or combined resistance may have changed because resistance other than end resistance is created on the circuit.

	Step	Check	Yes	No
1	**CHECK BETWEEN RELATED LINES AND MAIN WIRING HARNESS.** Using the tester, measure the resistance between terminals. ***Connector & terminal*** ***(B40) No. 6 — No. 14:***	Is the resistance 10 Ω or less?	Go to step **2**.	Go to step **4**.

	Step	Check	Yes	No
2	**CHECK MAIN WIRING HARNESS AND RELATED LINES.** With a tester connected, disconnect control module connectors in order. NOTE: Disconnect the body integrated unit at the end. ***Connector & terminal*** ***(B40) No. 6 — No. 14:***	Is there any control module whose condition has changed from short state?	Replace the control module whose resistance has changed. When the value changed at disconnecting the body integrated unit, go to next. Go to step **3**.	Go to step **4**.
3	**CHECK BETWEEN MAIN WIRING HARNESSES.** Using the tester, measure the resistance between terminals. ***Connector & terminal*** ***(i84) No. 27 — No. 35:***	Is the resistance 10 Ω or less?	Repair or replace the short circuit of the harness.	Replace the body integrated unit. <Ref. to SL-72, REMOVAL, Body Integrated Unit.>
4	**CHECK CONTROL MODULE.** 1) Disconnect ECM and VDC CM connectors. 2) Using a tester, measure the resistance between control module terminals. ***Connector & terminal*** ***(B136) No. 17 — No. 28:*** ***(B310) No. 8 — No. 10:***	Is the resistance between 115 — 135 Ω?	Replace the control module whose end resistance value is out of the specified range.	Go to step **5**.
5	**CHECK CONTROL MODULE.** 1) Disconnect the body integrated unit connector. 2) Using a tester, measure the resistance between control module terminals. ***Connector & terminal*** ***(B281) No. 28 — (i84) No. 27:*** ***(B281) No. 20 — (i84) No. 35:***	Is the resistance between 1425 — 1575 Ω?	Go to step **6**.	Replace the body integrated unit. <Ref. to SL-72, REMOVAL, Body Integrated Unit.>
6	**CHECK CONTROL MODULE.** Using a tester, measure the resistance between control module terminals. ***Connector & terminal*** ***(B281) No. 28 — (i84) No. 35:*** ***(B281) No. 20 — (i84) No. 27:***	Is the resistance less than 1 Ω?	Go to step **7**.	Replace the body integrated unit. <Ref. to SL-72, REMOVAL, Body Integrated Unit.>
7	**CHECK CONTROL MODULE.** 1) Disconnect the security CM connector. 2) Using a tester, measure the resistance between control module terminals. ***Connector & terminal*** ***(B40) No. 6 — No. 14:***	Is the resistance between 1425 — 1575 Ω?	Go to step **8**.	Replace the security CM.
8	**CHECK HARNESS.** Using the tester, check the short circuit portion of each harness. ***Connector & terminal*** ***(B281) No. 28 — No. 20:***	Is the resistance 1 MΩ or more?	Go to step **10**.	Go to step **9**.
9	**CHECK CONTROL MODULE.** With a tester connected, disconnect control modules in order. ***Connector & terminal*** ***(B281) No. 28 — No. 20:***	Are there any control modules whose resistance changed to 1 MΩ or more?	Replace the control module that has changed.	Repair or replace the harness due to resistance component.
10	**CHECK CONTROL MODULE.** With a tester connected, disconnect control modules in order. ***Connector & terminal*** ***(i84) No. 27 — No. 35:***	Is there any control module whose resistance has changed to 1 MΩ or more?	Replace the control module that has changed.	Repair or replace the harness due to resistance component.

5. 65 Ω OR MORE

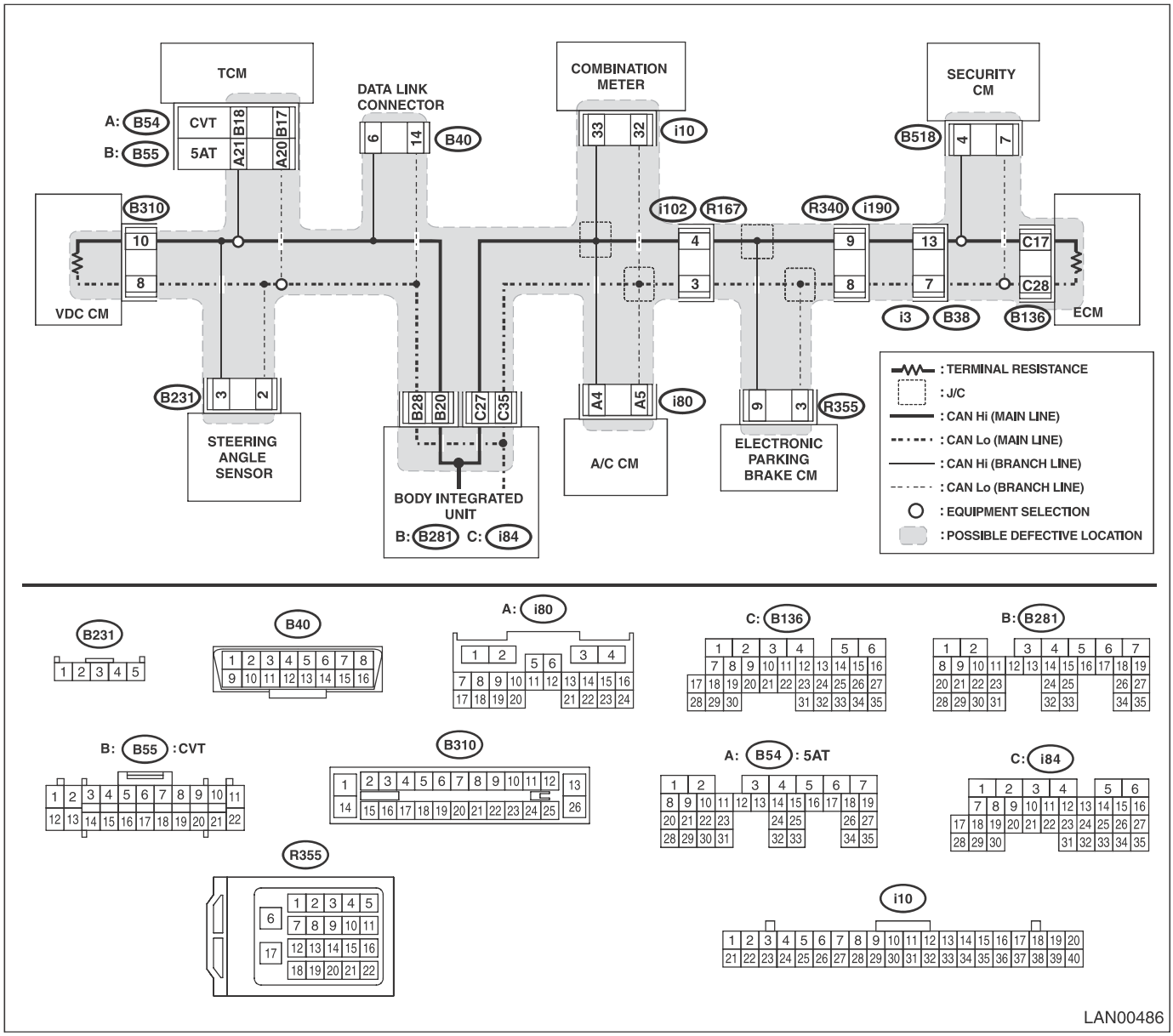

NOTE:
When CAN communication circuit is measured, combined resistance of end resistance (120 Ω) in ECM and end resistance (120 Ω) in VDC CM can be measured. The combined resistance is approximately 56 — 64 Ω. When the measured resistance value is 65 Ω or more, either of end resistance or main wiring harness may have malfunction such as open circuit.

	Step	Check	Yes	No
1	**CHECK CONTROL MODULE.** 1) Disconnect ECM and VDC CM connectors. 2) Using a tester, measure the resistance between control module terminals. ***Connector & terminal*** ***(B136) No. 17 — No. 28:*** ***(B310) No. 8 — No. 10:***	Is the resistance 115 — 135 Ω or more?	Replace the control module whose value is out of the specification.	Go to step **2**.

	Step	Check	Yes	No
2	**CHECK CONTROL MODULE.** 1) Disconnect the connector of body control module. 2) Using a tester, measure the resistance between control module terminals. ***Connector & terminal*** ***(B281) No. 28 — (i84) No. 27:*** ***(B281) No. 20 — (i84) No. 35:***	Is the resistance between 1425 — 1575 Ω?	Go to step **3**.	Replace the body integrated unit. <Ref. to SL-72, REMOVAL, Body Integrated Unit.>
3	**CHECK CONTROL MODULE.** Using the tester, measure the resistance between terminals. ***Connector & terminal*** ***(B281) No. 28 — (i84) No. 35:*** ***(B281) No. 20 — (i84) No. 27:***	Is the resistance less than 1 Ω?	Go to step **4**.	Replace the body integrated unit. <Ref. to SL-72, REMOVAL, Body Integrated Unit.>
4	**CHECK HARNESS.** Using a tester, check continuity between terminals. ***Connector & terminal*** ***(B40) No. 6 — (B310) No. 10:*** ***(B40) No. 14 — (B310) No. 8:*** ***(B40) No. 6 — (i281) No. 20:*** ***(B40) No. 14 — (i281) No. 28:***	Is there any continuity?	Go to step **5**.	Repair or replace the open circuit of harness.
5	**CHECK HARNESS.** 1) Disconnect the connector from ECM. 2) Using a tester, check continuity between terminals. ***Connector & terminal*** ***(B40) No. 6 — (B136) No. 17:*** ***(B40) No. 14 — (B136) No. 28:***	Is there any continuity?	It is possible that temporary poor contact occurs.	Repair or replace the open circuit of harness.

6. 56 — 64 Ω (TCM)

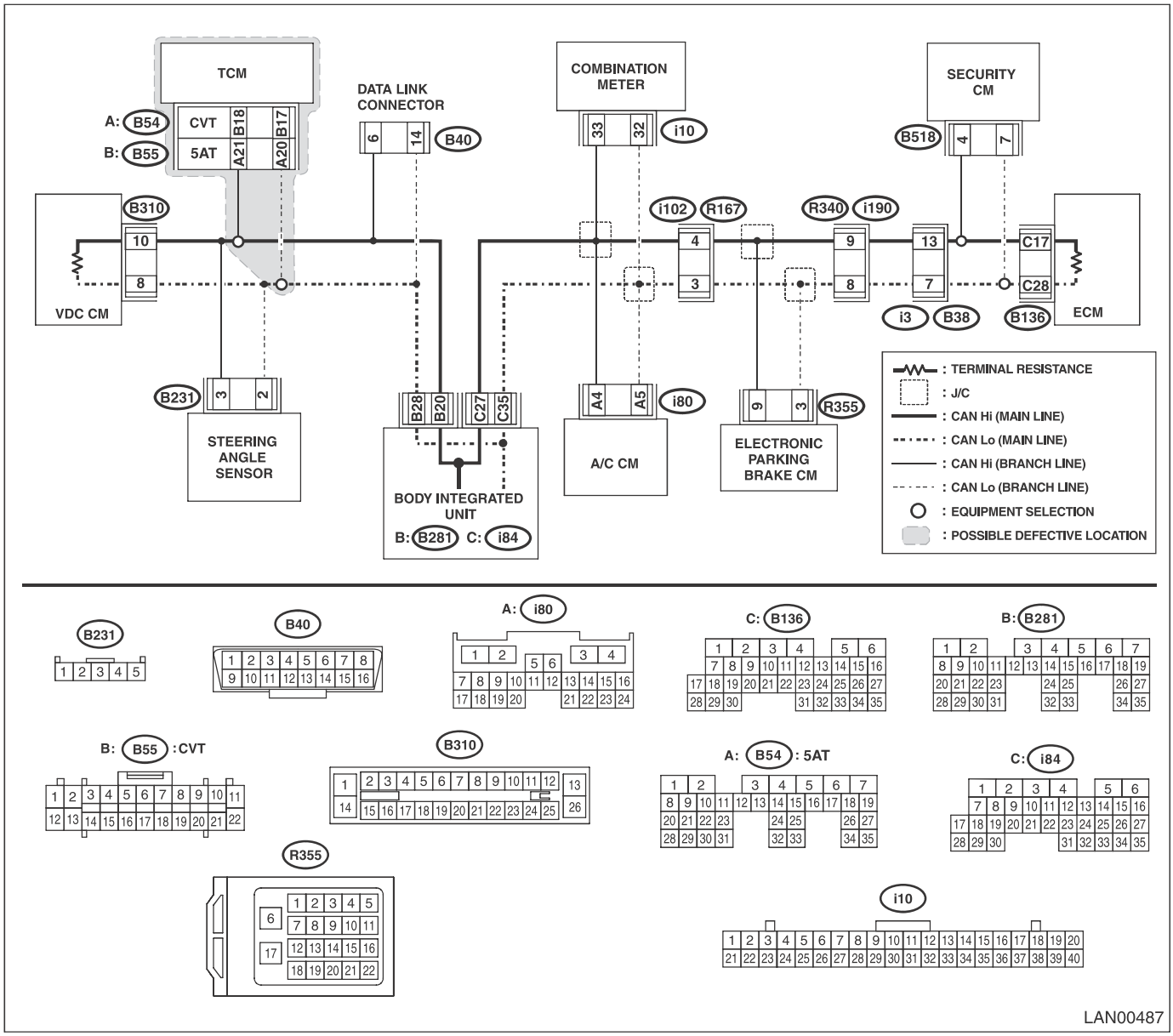

NOTE:
Perform inspection when no data is received, or faulty is detected. This is different from power supply shorted or ground shorted.

Step		Check	Yes	No
1	**CHECK BETWEEN RELATED LINES AND MAIN WIRING HARNESS.** 1) Disconnect the TCM connector. 2) Using the tester, measure the resistance between terminals. ***Connector & terminal*** ***CVT model*** ***(B55) No. 17 — No. 18:*** ***5AT model*** ***(B54) No. 20 — No. 21:***	Is the resistance 400 Ω or more?	Related lines between TCM and main wiring harness is open, or main wiring harness is open at two places or more.	Go to step **2**.

Step		Check	Yes	No
2	**CHECK RELATED LINES.** Using the tester, measure the resistance between terminals. ***Connector & terminal*** ***CVT model*** ***(B55) No. 17 — (B40) No. 14:*** ***(B55) No. 18 — (B40) No. 6:*** ***5AT model*** ***(B54) No. 20 — (B40) No. 14:*** ***(B54) No. 21 — (B40) No. 6:***	Is the resistance 10 Ω or more?	Repair or replace the open circuit portion of TCM related lines.	Check DTC of TCM. <Ref. to CVT(diag)-17, OPERATION, Read Diagnostic Trouble Code (DTC).> <Ref. to 5AT(diag)-20, OPERATION, Read Diagnostic Trouble Code (DTC).>

7. RELATED LINES 56 — 64 Ω (STEERING ANGLE SENSOR)

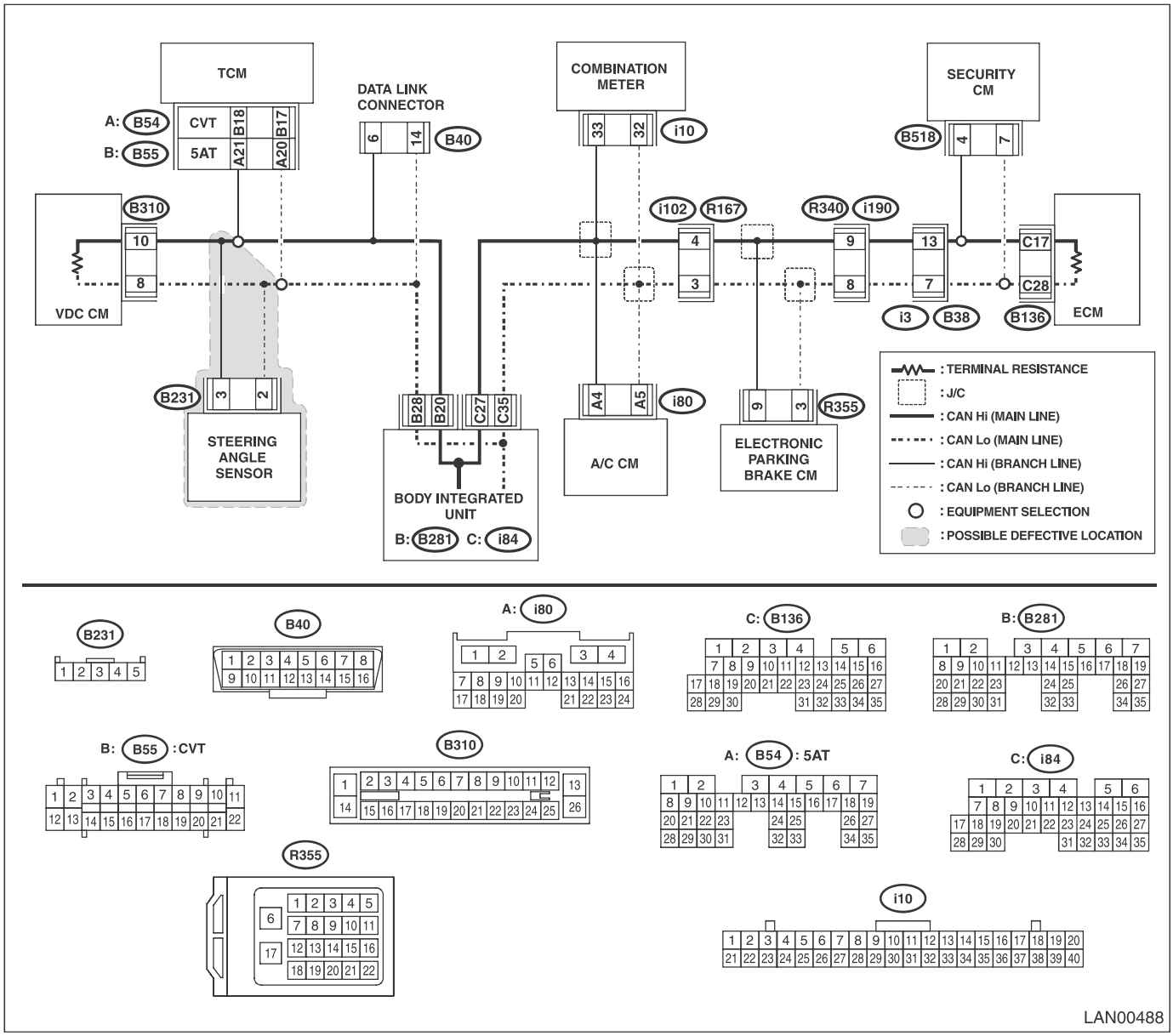

LAN00488

Step		Check	Yes	No
1	**CHECK BETWEEN RELATED LINES AND MAIN WIRING HARNESS.** 1) Disconnect the steering angle sensor connector. 2) Using the tester, measure the resistance between terminals. ***Connector & terminal*** ***(B231) No. 2 — No. 3:***	Is the resistance 400 Ω or more?	Related lines between steering angle sensor and main wiring harness is open, or main wiring harness is open at two places or more.	Go to step **2**.
2	**CHECK RELATED LINES.** Using the tester, measure the resistance between terminals. ***Connector & terminal*** ***(B231) No. 2 — (B40) No. 14:*** ***(B231) No. 3 — (B40) No. 6:***	Is the resistance 10 Ω or more?	Repair or replace the open circuit portion of steering angle sensor related lines.	Check DTC of VDC CM. <Ref. to VDC(diag)-23, OPERATION, Read Diagnostic Trouble Code (DTC).>

8. 56 — 64 Ω (A/C CM)

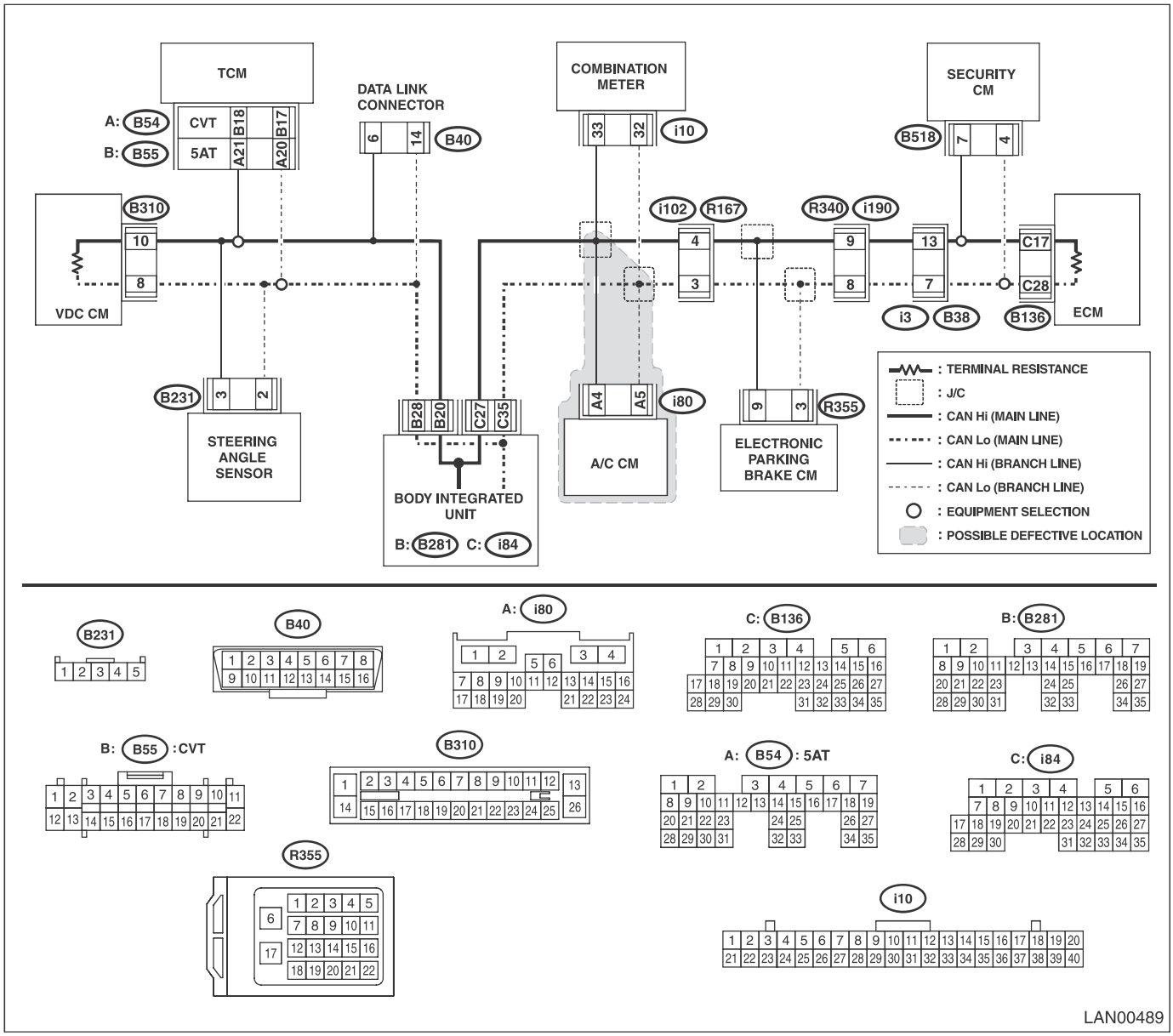

Step		Check	Yes	No
1	**CHECK BETWEEN RELATED LINES AND MAIN WIRING HARNESS.** 1) Disconnect the A/C CM connector. 2) Using the tester, measure the resistance between terminals. ***Connector & terminal*** ***(i80) No. 4 — No. 5:***	Is the resistance 400 Ω or more?	Related lines between A/C CM and main wiring harness is open, or main wiring harness is open at two places or more.	Go to step **2**.
2	**CHECK RELATED LINES.** Using the tester, measure the resistance between terminals. ***Connector & terminal*** ***(i80) No. 4 — (B40) No. 6:*** ***(i80) No. 5 — (B40) No. 14:***	Is the resistance 10 Ω or more?	Repair or replace the open circuit of A/C CM related lines.	Check DTC of A/C CM. <Ref. to AC(diag)-26, OPERATION, Read Diagnostic Trouble Code (DTC).>

9. 56 — 64 Ω (ELECTRONIC PARKING CM)

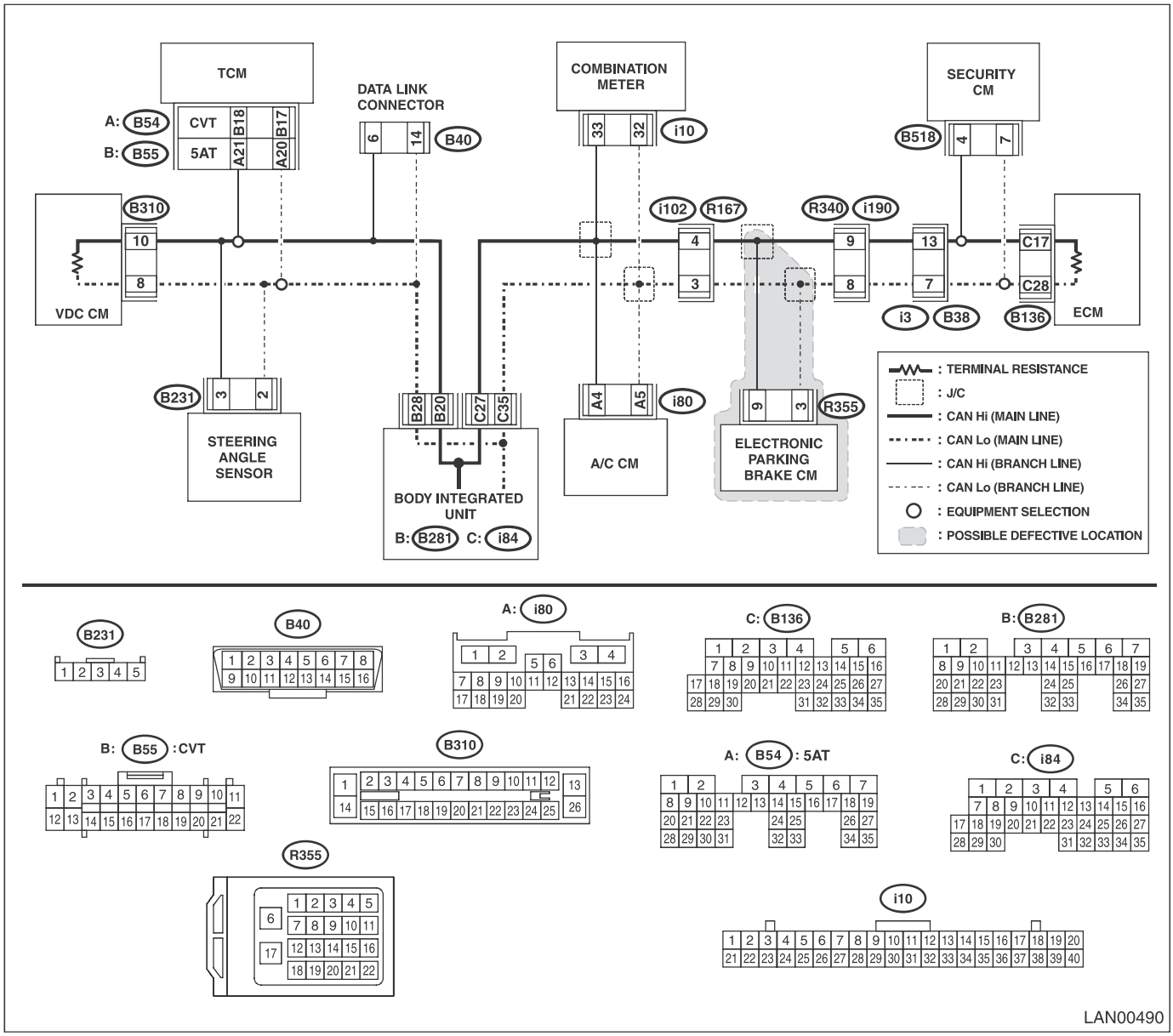

LAN00490

Step		Check	Yes	No
1	**CHECK BETWEEN RELATED LINES AND MAIN WIRING HARNESS.** 1) Disconnect the electronic parking CM connector. 2) Using the tester, measure the resistance between terminals. ***Connector & terminal*** ***(R355) No. 3 — No. 9:***	Is the resistance 400 Ω or more?	Related lines between electronic parking CM and main wiring harness is open, or main wiring harness is open at two places or more.	Go to step **2**.
2	**CHECK RELATED LINES.** Using the tester, measure the resistance between terminals. ***Connector & terminal*** ***(R355) No. 9 — (B40) No. 6:*** ***(R355) No. 3 — (B40) No. 14:***	Is the resistance 10 Ω or more?	Repair or replace the open circuit portion of electronic parking CM related lines.	Check DTC of electronic parking CM. <Ref. to PB(diag)-22, OPERATION, Read Diagnostic Trouble Code (DTC).>

10.56 — 64 Ω (COMBINATION METER)

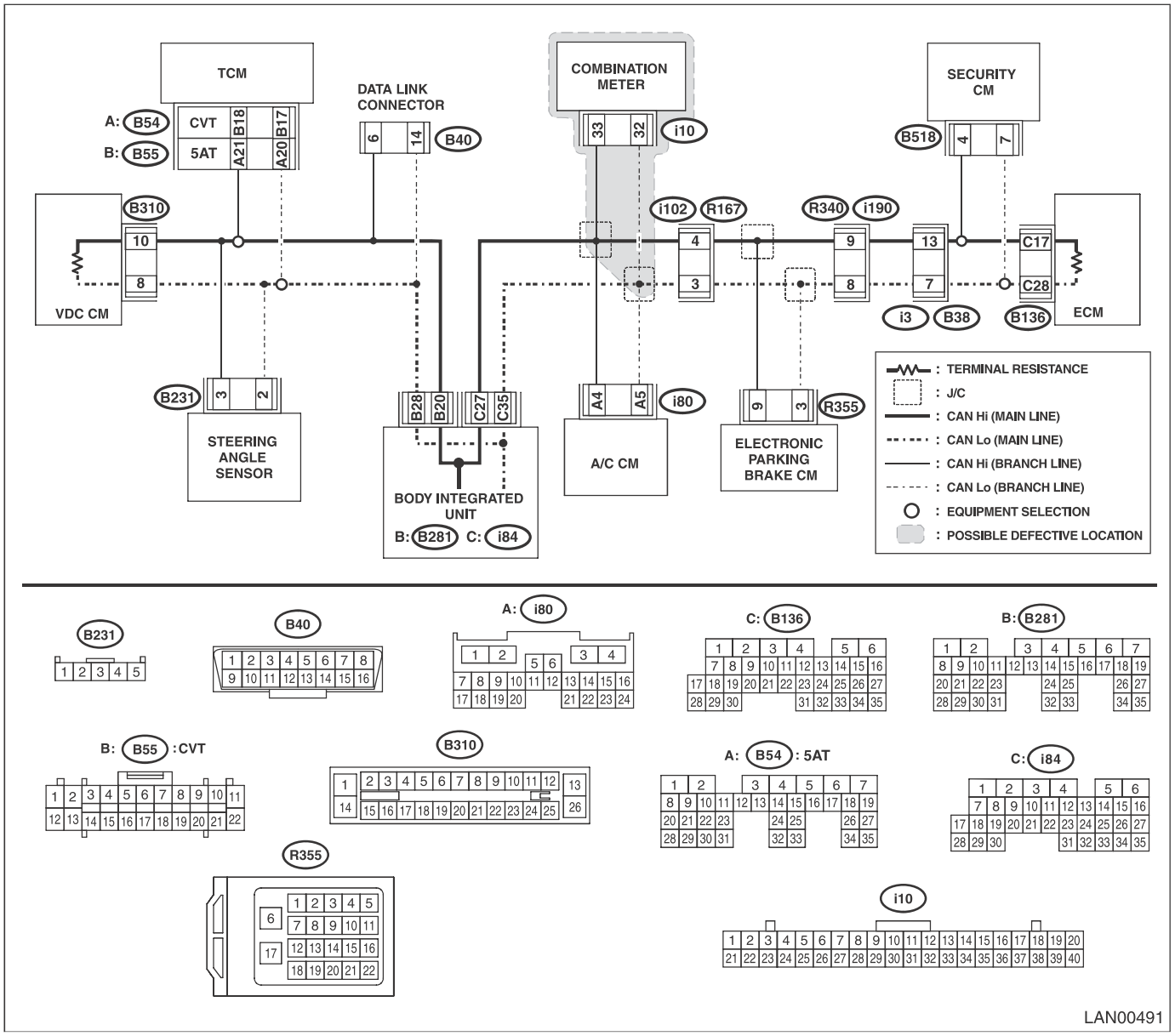

Step		Check	Yes	No
1	**CHECK BETWEEN RELATED LINES AND MAIN WIRING HARNESS.** 1) Disconnect the combination meter connector. 2) Using the tester, measure the resistance between terminals. ***Connector & terminal*** ***(i10) No. 32 — No. 33:***	Is the resistance 400 Ω or more?	Related lines between combination meter and main wiring harness is open, or main wiring harness is open at two places or more.	Go to step **2**.
2	**CHECK RELATED LINES.** Using the tester, measure the resistance between terminals. ***Connector & terminal*** ***(i10) No. 32 — (B40) No. 14:*** ***(i10) No. 33 — (B40) No. 6:***	Is the resistance 10 Ω or more?	Repair or replace the open circuit portion of combination meter related lines.	Check DTC of combination meter.

11.56 — 64 Ω (SECURITY CM)

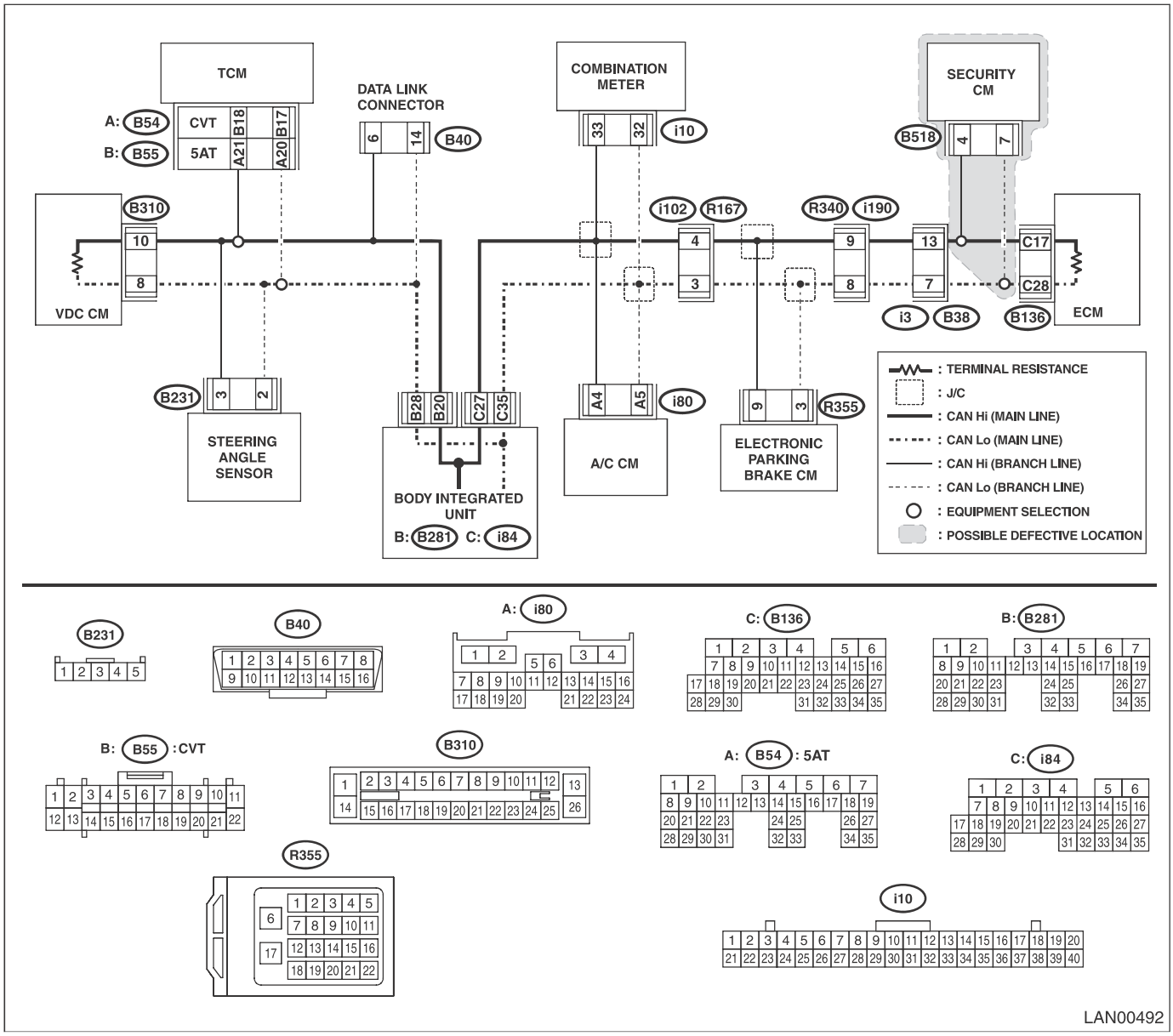

Step		Check	Yes	No
1	**CHECK BETWEEN RELATED LINES AND MAIN WIRING HARNESS.** 1) Disconnect the security CM connector. 2) Using the tester, measure the resistance between terminals. ***Connector & terminal*** ***(B518) No. 7 — No. 4:***	Is the resistance 400 Ω or more?	Related lines between security CM and main wiring harness is open, or main wiring harness is open at two places or more.	Go to step **2**.
2	**CHECK RELATED LINES.** Using the tester, measure the resistance between terminals. ***Connector & terminal*** ***(B518) No. 4 — (B40) No. 6:*** ***(B518) No. 7 — (B40) No. 14:***	Is the resistance 10 Ω or more?	Repair or replace the open circuit portion of security CM related lines.	Check DTC of immobilizer system. <Ref. to IM(diag)-9, OPERATION, Read Diagnostic Trouble Code (DTC).>

10.List of Diagnostic Trouble Code (DTC)

A: LIST

DTC	Contents	Content of diagnosis	Note
None	Communication for Initializing Impossible	Subaru Select Monitor communication is open or shorted.	<Ref. to LAN(diag)-47, COMMUNICATION FOR INITIALIZING IMPOSSIBLE, Diagnostic Procedure with Diagnostic Trouble Code (DTC).>
U1201	CAN-HS counter abnormal	High speed CAN communication error	<Ref. to LAN(diag)-49, DTC U1201 CAN-HS COUNTER ABNORMAL, Diagnostic Procedure with Diagnostic Trouble Code (DTC).>
U1202	CAN-HS Bus OFF	Communication of some module is shut down.	<Ref. to LAN(diag)-51, DTC U1202 CAN-HS BUS OFF, Diagnostic Procedure with Diagnostic Trouble Code (DTC).>
U1211	CAN-HS ECM data abnormal	Received error data from ECM.	<Ref. to LAN(diag)-53, DTC U1211 CAN-HS ECM DATA ABNORMAL, Diagnostic Procedure with Diagnostic Trouble Code (DTC).>
U1212	CAN-HS TCM data abnormal	Received error data from TCM.	<Ref. to LAN(diag)-55, DTC U1212 CAN-HS TCM DATA ABNORMAL, Diagnostic Procedure with Diagnostic Trouble Code (DTC).>
U1213	CAN-HS VDC Data Abnormal	Received error data from VDC module.	<Ref. to LAN(diag)-57, DTC U1213 CAN-HS VDC DATA ABNORMAL, Diagnostic Procedure with Diagnostic Trouble Code (DTC).>
U121A	CAN-HS Meter Unit Data Abnormal	Received error data from meter.	<Ref. to LAN(diag)-61, DTC U121A CAN-HS METER UNIT DATA ABNORMAL, Diagnostic Procedure with Diagnostic Trouble Code (DTC).>
U121B	CAN-HS A/C Data Abnormal	Received error data from A/C module.	<Ref. to LAN(diag)-63, DTC U121B CAN-HS A/C DATA ABNORMAL, Diagnostic Procedure with Diagnostic Trouble Code (DTC).>
U121C	CAN-HS SCU Data Abnormal	Received error data from SCU.	<Ref. to LAN(diag)-65, DTC U121C CAN-HS SCU DATA ABNORMAL, Diagnostic Procedure with Diagnostic Trouble Code (DTC).>
U1219	CAN-HS EPB Data Abnormal	Received error data from EPB module.	<Ref. to LAN(diag)-59, DTC U1219 CAN-HS EPB DATA ABNORMAL, Diagnostic Procedure with Diagnostic Trouble Code (DTC).>
U1221	CAN-HS ECM no-receive data	Not received data from ECM.	<Ref. to LAN(diag)-67, DTC U1221 CAN-HS ECM NO-RECEIVE DATA, Diagnostic Procedure with Diagnostic Trouble Code (DTC).>
U1222	CAN-HS TCM No-Receive Data	Not received data from TCM.	<Ref. to LAN(diag)-69, DTC U1222 CAN-HS TCM NO-RECEIVE DATA, Diagnostic Procedure with Diagnostic Trouble Code (DTC).>
U1223	CAN-HS VDC No-Receive Data	Not received data from VDC module.	<Ref. to LAN(diag)-71, DTC U1223 CAN-HS VDC NO-RECEIVE DATA, Diagnostic Procedure with Diagnostic Trouble Code (DTC).>
U122A	CAN-HS Meter No-Receive Data	Not received data from meter.	<Ref. to LAN(diag)-75, DTC U122A CAN-HS METER NO-RECEIVE DATA, Diagnostic Procedure with Diagnostic Trouble Code (DTC).>
U122B	CAN-HS A/C No-Receive Data	Not received data from A/C CM.	<Ref. to LAN(diag)-77, DTC U122B CAN-HS A/C NO-RECEIVE DATA, Diagnostic Procedure with Diagnostic Trouble Code (DTC).>
U122C	CAN-HS SCU No-Receive Data	Not received data from SCU.	<Ref. to LAN(diag)-79, DTC U122C CAN-HS SCU NO-RECEIVE DATA, Diagnostic Procedure with Diagnostic Trouble Code (DTC).>
U1229	CAN-HS EPB No-Receive Data	Not received data from EPB module.	<Ref. to LAN(diag)-73, DTC U1229 CAN-HS EPB NO-RECEIVE DATA, Diagnostic Procedure with Diagnostic Trouble Code (DTC).>

1. DTC TABLE

NOTE:
When more than one DTC codes are recorded, referring to their combination and indicator display in the combination meter will make it easy to identify the possible cause. Refer to the list for typical examples.

Combination meter display	Diagnostic Code that was displayed.						Portions with high rate of malfunction occurrence
	ECM	A/C	EPB (electronic parking brake)	Body integrated unit	TCM	VDC CM (Detailed code)	
CRUISE blink Check engine lit [S] lit [S] lit VDC OFF lit EPB operating light lit	U0122	Communication failure	Communication failure	U1222 U1223	P1718	5144 5143 5136	Hi-side circuit near the body integrated unit 1 is open
CRUISE lit Check engine lit VDC lit [S] lit	U0122 (Past)	U0002 (Past)	C0264	U1201 U1222 U1223 (Past)	P1718 (Past)	5143 5144 5136	Hi-side circuit near the body integrated unit 1 was open (restored)
CRUISE blink Check engine lit [S] lit VDC lit VDC OFF lit EPB operating light lit Shift indicator off	U0122	Communication failure	Communication failure	U1222 U1223	P1718	5144 5136	Lo-side circuit near the body integrated unit 1 is open
CRUISE blink CHECKEGI [S] blink VDC VDC OFF ABS EPB operating light lit Shift indicator off	U0122 (Past)	U0002 (Past)	C0264	U1222 U1223 (Past)	U1718 (Past)	5143 5121 5144	Lo-side circuit near the body integrated unit 1 was open (restored)
CRUISE blink CHECKEGI [S] blink VDC VDC OFF ABS EPB operating light lit Shift indicator off	U0122	Communication failure	Communication failure	U1222 U1223	P1718	5144 5136	Hi- and Lo-side circuits near the body integrated unit 1 are open
CRUISE lit CHECKEGI VDC S blink	U0122 (Past)	U0002 (Past)	C0262 C0264	U1222 U1223 (Past)	P1718 (Past)	5143 5144 5136	Hi- and Lo-side circuits near the body integrated unit 1 were open (restored)
EPB OFF VDC VDC OFF Coolant temperature blink (red/blue) FUEL blink ABS EPB operating light blink EPB warning light Door off [I] blink CRUISE/blink Shift indicator off	U0073	Communication failure	Communication failure	U1201 U1202 U1221 U1223 U1229 U122A U122B	P1718	5135 5121	Hi-side circuit near the body integrated unit 1 is shorted to ground

Combination meter display	Diagnostic Code that was displayed.						Portions with high rate of malfunction occurrence
	ECM	A/C	EPB (electronic parking brake)	Body integrated unit	TCM	VDC CM (Detailed code)	
EPB OFF VDC VDC OFF Coolant temperature blink (red/blue) FUEL blink ABS EPB operating light blink EPB warning light Door off [I] blink CRUISE/blink Shift indicator off	U0073 (Past)	U0002 (Past)	—	U1221 U1202 U1221 U1223 U1229 U122A U122B (Past)	P1718 (Past)	5143 5135 5121	Hi-side circuit near the body integrated unit 1 was shorted to ground
Normal operation	—	—	—	—	—	—	Lo-side circuit near the body integrated unit 1 is shorted to ground
Normal operation	—	—	—	—	—	—	Lo-side circuit near the body integrated unit 1 was shorted to ground
CRUISE lit CHECKEGI [S] blink VDC Shift indicator off	U0073 U0140	Communication failure	Communication failure	U1201 U1202 U1221 U1223 U1229 U122A U122B	P1718	5135 5121	Hi- and Lo-side circuits near the body integrated unit 1 are shorted
CRUISE lit CHECKEGI [S] blink VDC	U0073 U0140	U0002 (Past)	—	U1201 U1202 U1221 U1223 U1229 U122A U122B (Past)	P1718 (Past)	5143 5135 5121	Hi- and Lo-side circuits near the body integrated unit 1 were shorted
CRUISE blink CHECKEGI [S] blink FUEL blink VDC VDC OFF ABS EPB operating light lit Shift indicator off	U0122	Communication failure	Communication failure	U1221 U1229 U122A U122B	P1718	5144 5136	Hi-side circuit near the body integrated unit 2 is open
CRUISE lit CHECKEGI VDC S blink	U0122 (Past)	U0002 (Past)	C0262 C0263 C0264 C0265 C0266 C0267	U1221 (Past)	P1718 (Past)	5143 5144 5136	Hi-side circuit near the body integrated unit 2 was open

Combination meter display	Diagnostic Code that was displayed.						Portions with high rate of malfunction occurrence
	ECM	A/C	EPB (electronic parking brake)	Body integrated unit	TCM	VDC CM (Detailed code)	
CRUISE blink CHECKEGI [S] blink FUEL blink VDC VDC OFF ABS EPB operating light lit Shift indicator off	—	Communication failure	Communication failure	U1221	P1718	5144 5136	Lo-side circuit near the body integrated unit 2 is open
CRUISE lit CHECKEGI VDC S blink	—	U0002 (Past)	—	U1221 (Past)	P1718 (Past)	5143 5144 5136	Lo-side circuit near the body integrated unit 2 was open
CRUISE blink CHECKEGI [S] blink FUEL blink VDC VDC OFF ABS EPB operating light lit Shift indicator off	—	Communication failure	Communication failure	U1221	P1718	5144 5136	Hi- and Lo-side circuits near the body integrated unit 2 are open
CRUISE lit CHECKEGI VDC S blink	—	U0002 (Past)	—	U1221 (Past)	P1718 (Past)	5143 5144 5136	Hi- and Lo-side circuits near the body integrated unit 2 were open
EPB OFF VDC VDC OFF Coolant temperature blink (red/blue) FUEL blink ABS EPB operating light blink EPB warning light Door off [I] blink CRUISE/blink Shift indicator off	U0073	Communication failure	Communication failure	U1201 U1202 U1221 U1223 U1229 U122A U122B	P1718	5135 5121	Hi-side circuit near the body integrated unit 2 is shorted to ground
EPB OFF VDC VDC OFF Coolant temperature blink (red/blue) FUEL blink ABS EPB operating light blink EPB warning light Door off [I] blink CRUISE/blink Shift indicator off	U0073 (Past)	U0002 (Past)	—	U1221 U1202 U1221 U1223 U1229 U122A U122B (Past)	P1718 (Past)	5143 5135 5121	Hi-side circuit near the body integrated unit 2 was shorted to ground

Combination meter display	Diagnostic Code that was displayed.						Portions with high rate of malfunction occurrence
	ECM	A/C	EPB (electronic parking brake)	Body integrated unit	TCM	VDC CM (Detailed code)	
Normal operation	—	—	—	—	—	—	Lo-side circuit near the body integrated unit 2 is shorted to ground
Normal operation	—	—	—	—	—	—	Lo-side circuit near the body integrated unit 2 was shorted to ground
CRUISE lit CHECKEGI [S] blink VDC Shift indicator off	U0073 U0140	Communication failure	Communication failure	U1201 U1202 U1221 U1223 U1229 U122A U122B	P1718	5135 5121	Hi- and Lo-side circuits near the body integrated unit 2 are shorted
CRUISE lit CHECKEGI [S] blink VDC	U0073 U0140	U0002 (Past)	—	U1201 U1202 U1221 U1223 U1229 U122A U122B (Past)	P1718 (Past)	5143 5135 5121	Hi- and Lo-side circuits near the body integrated unit 2 were shorted
CRUISE lit CHECKEGI [S] blink VDC Shift indicator off	U0101	—	C0262	U1222	P1718 or P1725	5143 5137	Hi-side circuit near TCM is open
CRUISE lit CHECKEGI [S] blink VDC	U0101 (Past)	—	C0262	U1222 (Past)	P1718 or P1725 (Past)	5143 5137	Hi-side circuit near TCM was open
CRUISE lit CHECKEGI [S] blink VDC Shift indicator off	U0101	—	C0262	U1222	P1718 or P1725	5143 5137	Lo-side circuit near TCM is open
CRUISE lit CHECKEGI [S] blink VDC	U0101 (Past)	—	C0262	U1222 (Past)	P1718 or P1725 (Past)	5143 5137	Lo-side circuit near TCM was open
CRUISE lit CHECKEGI [S] blink VDC Shift indicator off	U0101	—	C0262	U1222	P1718 or P1725	5143 5137	Hi- and Lo-side circuits near TCM are open
CRUISE lit CHECKEGI [S] blink VDC	U0101 (Past)	—	C0262	U1222 (Past)	P1718 or P1725 (Past)	5143 5137	Hi- and Lo-side circuits near TCM were open

Combination meter display	Diagnostic Code that was displayed.						Portions with high rate of malfunction occurrence
	ECM	A/C	EPB (electronic parking brake)	Body integrated unit	TCM	VDC CM (Detailed code)	
EPB OFF VDC VDC OFF Coolant temperature blink (red/blue) FUEL blink ABS EPB operating light blink EPB warning light CHECKEGI Door off [I] blink CRUISE/blink Shift indicator off	U0073	Communication failure	Communication failure	U1201 U1202 U1221 U1223 U1229 U122A U122B	P1718 or P1725	5135 5136 5152	Hi-side circuit near TCM is shorted to ground
CRUISE lit CHECKEGI VDC S blink	U0073 (Past)	U0002 (Past)	—	U1201 U1202 U1221 U1223 U1229 U122A U122B (Past)	P1718 or P1725 (Past)	5143 5135 5136	Hi-side circuit near TCM was shorted to ground
Normal operation	—	—	—	—	—	—	Lo-side circuit near TCM is shorted to ground
Normal operation	—	—	—	—	—	—	Lo-side circuit near TCM was shorted to ground
EPB OFF VDC VDC OFF Coolant temperature blink (red/blue) FUEL blink ABS EPB operating light blink EPB warning light CHECKEGI Door off [I] blink CRUISE/blink Shift indicator off	U0073	Communication failure	Communication failure	U1201 U1202 U1221 U1223 U1229 U122A U122B	P1718 or P1725	5135 5121	Hi- and Lo-side circuits near TCM are shorted
CRUISE lit CHECKEGI VDC S blink	U0073 (Past)	U0001 U0002 (Past)	C0261	U1201 U1202 U1221 U1223 U1229 U122A U122B (Past)	U1718 or P1725 (Past)	5143 5135 5121	Hi- and Lo-side circuits near TCM were shorted
CRUISE lit	—	Communication failure	—	U122B	—	—	Hi-side circuit near A/C is open

Combination meter display	Diagnostic Code that was displayed.						Portions with high rate of malfunction occurrence
	ECM	A/C	EPB (electronic parking brake)	Body integrated unit	TCM	VDC CM (Detailed code)	
Normal operation	—	U0001 U0002 (Past)	—	U122B (Past)	—	—	Hi-side circuit near A/C was open
AT_OIL blink VDC CRUISE lit	—	Communication failure	—	U122B U1201	P1718 or P1725	5135 5121	Lo-side circuit near A/C is open
Normal operation	—	U0001 U0002	—	U1201 U122B (Past)	P1718 or P1725 (Past)	5144 5135 5121	Lo-side circuit near A/C was open
CRUISE lit	—	Communication failure	—	U122B	—	—	Hi- and Lo-side circuits near A/C are open
Normal operation	—	U0002 (Past)	—	122B (Past)	—	—	Hi- and Lo-side circuits near A/C were open
EPB OFF VDC VDC OFF Coolant temperature blink (red/blue) FUEL blink ABS EPB operating light blink EPB warning light CHECKEGI Door off [I] blink CRUISE/blink Shift indicator off	U0073 U0122	Communication failure	Communication failure	U1201 U1202 U1221 U1223 U1229 U122A U122B	P1718 or P1725	5135 5137 5121	Hi-side circuit near A/C is shorted to ground
CRUISE lit CHECKEGI VDC S blink	—	U0001 U0002 (Past)	—	U1201 U1202 U1221 U1223 U1229 U122A U122B (Past)	P1718 or P1725 (Past)	5143 5135 5137	Hi-side circuit near A/C was shorted to ground
Normal operation	—	—	—	—	—	—	Lo-side circuit near A/C is shorted to ground
Normal operation	—	—	—	—	—	—	Lo-side circuit near A/C was shorted to ground
EPB OFF VDC VDC OFF Coolant temperature blink (red/blue) FUEL lit ABS EPB operating light blink EPB warning light CHECKEGI Door off [I] blink CRUISE/blink Shift indicator off	U0073	Communication failure	Communication failure	U1201 U1202 U1221 U1223 U1229 U122A U122B	P1718 or P1725	5135 5136 5152	Hi- and Lo-side circuits near A/C are shorted

Combination meter display	Diagnostic Code that was displayed.						Portions with high rate of malfunction occurrence
	ECM	A/C	EPB (electronic parking brake)	Body integrated unit	TCM	VDC CM (Detailed code)	
CRUISE lit CHECKEGI VDC S blink	U0073 (Past)	U0001 U0002 (Past)	C0261	U1201 U1202 U1221 U1223 U1229 U122A U122B (Past)	P1718 or P1725 (Past)	5143 5135 5136	Hi- and Lo-side circuits near A/C were shorted
CRUISE lit Coolant temperature blink (red/blue) CHECKEGI ATOIL I blink FUEL blink VDC EPS warning light	U0073	Communication failure	C0261 C0263	U1201 U1202 U1221	P1718	5144 5135 5121	Hi-side circuit near ECM is open
CRUISE lit CHECKEGI VDC S blink	U0073 (Past)	U0001 U0002	—	U1201 U1202 U1221 (Past)	P1718 (Past)	5143	Hi-side circuit near ECM was open
CRUISE lit Coolant temperature blink (red/blue) CHECKEGI ATOIL blink I blink FUEL blink VDC	U0073	Communication failure	C0261 C0263	U1201 U1202 U1221	P1718	5144 5135 5136	Lo-side circuit near ECM is open
CRUISE lit CHECKEGI VDC S blink	U0073 (Past)	U0001 U0002 (Past)	C0261 C0263	U1201 U1202 U1221 (Past)	P1718 (Past)	5143 5144 5135	Lo-side circuit near ECM was open
CRUISE lit Coolant temperature blink (red/blue) CHECKEGI ATOIL blink I blink FUEL blink VDC	U0073	U0002	C0263	U1221 U1201	P1718	5144 5136	Hi- and Lo-side circuits near ECM are open
CRUISE lit CHECKEGI VDC S blink	U0073 (Past)	U0001 U0002 (Past)	C0263	U1201 U1221 (Past)	P1718 (Past)	5143 5144 5136	Hi- and Lo-side circuits near ECM were open

Combination meter display	Diagnostic Code that was displayed.						Portions with high rate of malfunction occurrence
	ECM	A/C	EPB (electronic parking brake)	Body integrated unit	TCM	VDC CM (Detailed code)	
EPB OFF VDC VDC OFF Coolant temperature blink (red/blue) FUEL blink ABS EPB operating light blink EPB warning light CHECKEGI Door off [I] blink CRUISE/blink Shift indicator off	U0073	Communication failure	Communication failure	U1201 U1202 U1221 U1223 U1229 U122A U122B	P1718	5135 5121	Hi-side circuit near ECM is shorted to ground
CRUISE lit CHECKEGI VDC S blink	U0073 (Past)	U0001 U0002	—	U1201 U1202 U1221 U1223 U1229 U122A U122B (Past)	P1718 (Past)	5143 5135 5121	Hi-side circuit near ECM was shorted to ground
Normal operation	—	—	—	—	—	—	Lo-side circuit near ECM is shorted to ground
Normal operation	—	—	—	—	—	—	Lo-side circuit near ECM was shorted to ground
EPB OFF VDC VDC OFF Coolant temperature blink (red/blue) FUEL blink ABS EPB operating light blink EPB warning light CHECKEGI Door off [I] blink CRUISE/blink Shift indicator off	U0073 U0122	Communication failure	Communication failure	U1201 U1202 U1221 U1223 U1229 U122A U122B	P1718	5143 5135 5144	Hi- and Lo-side circuits near ECM are shorted
CRUISE lit CHECKEGI VDC S blink	U0073 U0122 (Past)	U0001 U0002 (Past)	C0261	U1201 U1202 U1221 U1223 U1229 U122A U122B (Past)	P1718 (Past)	5143 5135 5144	Hi- and Lo-side circuits near ECM were shorted

Combination meter display	Diagnostic Code that was displayed.						Portions with high rate of malfunction occurrence
	ECM	A/C	EPB (electronic parking brake)	Body integrated unit	TCM	VDC CM (Detailed code)	
EPB OFF VDC VDC OFF Coolant temperature blink (red/blue) FUEL blink ABS EPB operating light blink EPB warning light Door off [I] blink CRUISE/blink Shift indicator off	—	U0002	C0267	U122A	—	—	Hi-side circuit near meter is open
Normal operation	—	U0002 (Past)	C0267	U122A (Past)	—	—	Hi-side circuit near meter was open
EPB OFF VDC VDC OFF Coolant temperature blink (red/blue) FUEL blink ABS EPB operating light blink EPB warning light Door off [I] blink CRUISE/blink Shift indicator off	—	U0002	C0267	U122A	—	—	Lo-side circuit near meter is open
Normal operation	—	U0002	C0267	U122A (Past)	—	—	Lo-side circuit near meter was open
EPB OFF VDC VDC OFF Coolant temperature blink (red/blue) FUEL blink ABS EPB operating light blink EPB warning light Door off [I] blink CRUISE/blink Shift indicator off	—	U0002	C0267	U122A	—	—	Hi- and Lo-side circuits near meter are open
Normal operation	—	U0002	C0267	U122A (Past)	—	—	Hi- and Lo-side circuits near meter were open
CRUISE lit CHECKEGI VDC S blink	U0122 U0073	Communication failure	Communication failure	U1201 U1202 U1221 U1223 U1229 U122A U122B	P1718 or P1725	5135 5137 5136	Hi-side circuit near meter is shorted to ground

Combination meter display	Diagnostic Code that was displayed.						Portions with high rate of malfunction occurrence
	ECM	A/C	EPB (electronic parking brake)	Body integrated unit	TCM	VDC CM (Detailed code)	
CRUISE lit CHECKEGI VDC S blink	U0122 U0073 (Past)	U0001 U0002 (Past)	C0261	U1201 U1202 U1221 U1223 U1229 U122A U122B (Past)	P1718 or P1725 (Past)	5143 5135 5137	Hi-side circuit near meter was shorted to ground
Normal operation	—	—	—	—	—	—	Lo-side circuit near meter is shorted to ground
Normal operation	—	—	—	—	—	—	Lo-side circuit near meter was shorted to ground
EPB OFF VDC VDC OFF Coolant temperature blink (red/blue) FUEL blink ABS EPB operating light blink EPB warning light CHECKEGI Door off [I] blink CRUISE/blink Shift indicator off	U0073	Communication failure	Communication failure	U1201 U1202 U1221 U1223 U1229 U122A U122B	P1718 or P1725	5135 5121	Hi- and Lo-side circuits near meter are shorted
CRUISE lit CHECKEGI VDC S blink	U0073 (Past)	U0001 U0002 (Past)	C0261	U1201 U1202 U1221 U1223 U1229 U122A U122B (Past)	P1718 or P1725 (Past)	5134 5135 5121	Hi- and Lo-side circuits near meter were shorted
EPB OFF EPB operating light blink EPB warning light CRUISE/lit	—	—	Communication failure	U1229	—	—	Hi-side circuit near electronic parking brake is open
Normal operation	—	—	C0261	U1229	—	—	Hi-side circuit near electronic parking brake was open
EPB OFF EPB operating light blink EPB warning light CRUISE/lit	—	—	Communication failure	U1229	—	—	Lo-side circuit near electronic parking brake is open
Normal operation	—	—	C0261	U1229	—	—	Lo-side circuit near electronic parking brake was open

Combination meter display	Diagnostic Code that was displayed.						Portions with high rate of malfunction occurrence
	ECM	A/C	EPB (electronic parking brake)	Body integrated unit	TCM	VDC CM (Detailed code)	
EPB OFF EPB operating light blink EPB warning light CRUISE/lit	—	—	Communication failure	U1229	—	—	Hi- and Lo-side circuits near electronic parking brake are open
Normal operation	—	—	C0261	U1229	—	—	Hi- and Lo-side circuits near electronic parking brake were open
EPB OFF VDC VDC OFF Coolant temperature blink (red/blue) FUEL blink ABS EPB operating light blink EPB warning light CHECKEGI Door off [I] blink CRUISE/blink Shift indicator off	U0073 U0122	Communication failure	Communication failure	U1201 U1202 U1221 U1229 U122A U122B	P1718 or P1725	51335 5137 5121	Hi-side circuit near electronic parking brake is shorted to ground
CRUISE lit CHECKEGI VDC S blink	U0073 U0122 (Past)	U0001 U0002 (Past)	C0261	U1201 U1202 U1221 U1223 U1229 U122A U122B (Past)	P1718 or P1725 (Past)	5143 5135 5137	Hi-side circuit near electronic parking brake was shorted to ground
Normal operation	—	—	—	—	—	—	Lo-side circuit near electronic parking brake is shorted to ground
Normal operation	—	—	—	—	—	—	Lo-side circuit near electronic parking brake was shorted to ground
EPB OFF VDC VDC OFF Coolant temperature blink (red/blue) FUEL blink ABS EPB operating light blink EPB warning light CHECKEGI Door off [I] blink CRUISE/blink Shift indicator off	U0073	Communication failure	Communication failure	U1201 U1202 U1221 U1223 U1229 U122A U122B	P1718 or P1725	5135 5121	Hi- and Lo-side circuits near electronic parking brake are shorted

Combination meter display	Diagnostic Code that was displayed.						Portions with high rate of malfunction occurrence
	ECM	A/C	EPB (electronic parking brake)	Body integrated unit	TCM	VDC CM (Detailed code)	
CRUISE lit CHECKEGI VDC S blink	U0073 (Past)	U0001 U0002 (Past)	C0261	U1201 U1202 U1221 U1223 U1229 U122A U122B (Past)	P1718 or P1725	5143 5135 5121	Hi- and Lo-side circuits near electronic parking brake were shorted
CRUISE lit VDC OFF CHECKEGI ATOIL blink VDC S blink EPS warning light ABS	U0122	U0002	C0264	U1223	P1718	5135 5136 5137	Hi-side circuit near VDC is open
CRUISE lit CHECKEGI VDC S blink	—	—	C0264	U1223 (Past)	—	5143	Hi-side circuit near VDC was open
CRUISE lit VDC OFF CHECKEGI ATOIL blink VDC S blink EPS warning light ABS	U0122	U0002	C0264	U1201 U1202 U1223	P1718	5135 5136 5152	Lo-side circuit near VDC is open
CRUISE lit CHECKEGI VDC S blink	—	—	C0264	U1201 U1202 U1223 (Past)	—	5143	Lo-side circuit near VDC was open
CRUISE lit VDC OFF CHECKEGI ATOIL blink VDC S blink EPS warning light ABS	U0122	U0002	C0264	U1223	P1718	5135 5136 5137	Hi- and Lo-side circuits near VDC are open
CRUISE lit CHECKEGI VDC S blink	—	—	C0264	U1223 (Past)	—	5143	Hi- and Lo-side circuits near VDC were open

Combination meter display	Diagnostic Code that was displayed.						Portions with high rate of malfunction occurrence
	ECM	A/C	EPB (electronic parking brake)	Body integrated unit	TCM	VDC CM (Detailed code)	
EPB OFF VDC VDC OFF Coolant temperature blink (red/blue) FUEL blink ABS EPB operating light blink EPB warning light CHECKEGI Door off [I] blink CRUISE/blink Shift indicator off	U0073	Communication failure	Communication failure	U1201 U1202 U1221 U1223 U1229 U122A U122B	P1718	5135 5121	Hi-side circuit near VDC is shorted to ground
CRUISE lit CHECKEGI VDC S blink	—	U0001 U0002	C0261	U1201 U1202 U1221 U1223 U1229 U122A U122B (Past)	—	5143	Hi-side circuit near VDC was shorted to ground
Normal operation	—	—	—	—	—	—	Lo-side circuit near VDC is shorted to ground
Normal operation	—	U0028	—	—	—	—	Lo-side circuit near VDC was shorted to ground
EPB OFF VDC VDC OFF Coolant temperature blink (red/blue) FUEL blink ABS EPB operating light blink EPB warning light CHECKEGI Door off [I] blink CRUISE/blink Shift indicator off	U0073	Communication failure	Communication failure	U1201 U1202 U1221 U1223 U1229 U122A U122B	P1718	5135 5152 5136	Hi- and Lo-side circuits near VDC are shorted
CRUISE lit CHECKEGI VDC S blink	U0073 (Past)	U0028	—	U1201 U1202 U1221 U1223 U1229 U122A U122B (Past)	P1718 (Past)	5143	Hi- and Lo-side circuits near VDC were shorted
CRUISE lit VDC	—	—	—	U1201 U1202	—	5121	Hi-side circuit near steering angle sensor is open
Normal operation	—	—	—	U1201 U1202 (Past)	—	5121	Hi-side circuit near steering angle sensor was open

Combination meter display	Diagnostic Code that was displayed.						Portions with high rate of malfunction occurrence
	ECM	A/C	EPB (electronic parking brake)	Body integrated unit	TCM	VDC CM (Detailed code)	
CRUISE lit VDC	—	—	—	U1201	—	5121	Lo-side circuit near steering angle sensor is open
Normal operation	—	—	—	U1201 (Past)	—	5121	Lo-side circuit near steering angle sensor was open
CRUISE lit VDC	—	U0028 (Past)	—	—	—	5121	Hi- and Lo-side circuits near steering angle sensor are open
Normal operation	—	U0028 (Past)	—	—	—	5121	Hi- and Lo-side circuits near steering angle sensor were open
EPB OFF VDC VDC OFF Coolant temperature blink (red/blue) FUEL blink ABS EPB operating light blink EPB warning light CHECKEGI Door off [I] blink CRUISE/blink Shift indicator off	U0073	Communication failure	Communication failure	U1201 U1202 U1221 U1223 U1229 U122A U122B	P1718 or P1725	5135 5137	Hi-side circuit near steering angle sensor is shorted to ground
VDC CHECKEGI [S] blink CRUISE lit	U0073 (Past)	U0001 U0002 (Past)	C0261	U1201 U1202 U1221 U1223 U1229 U122A U122B (Past)	P1718 or P1725 (Past)	5143 5135	Hi-side circuit near steering angle sensor was shorted to ground
Normal operation	—	—	—	—	—	—	Lo-side circuit near steering angle sensor is shorted to ground
Normal operation	—	—	—	—	—	—	Lo-side circuit near steering angle sensor was shorted to ground
EPB OFF VDC VDC OFF Coolant temperature blink (red/blue) FUEL blink ABS EPB operating light blink EPB warning light CHECKEGI Door off [I] blink CRUISE/blink Shift indicator off	U0073	Communication failure	Communication failure	U1201 U1202 U1221 U1223 U1229 U122A U122B	P1718 or P1725	5135 5152 5136	Hi- and Lo-side circuits near steering angle sensor are shorted

Combination meter display	Diagnostic Code that was displayed.						Portions with high rate of malfunction occurrence
	ECM	A/C	EPB (electronic parking brake)	Body integrated unit	TCM	VDC CM (Detailed code)	
VDC CHECKEGI [S] blink CRUISE lit	U0073 (Past)	U0001 U0002 (Past)	C0261	U1201 U1202 U1221 U1223 U1229 U122A U122B (Past)	P1718 or P1725 (Past)	5143 5135 5152	Hi- and Lo-side circuits near steering angle sensor were shorted

11.Diagnostic Procedure with Diagnostic Trouble Code (DTC)

A: COMMUNICATION FOR INITIALIZING IMPOSSIBLE

NOTE:
• This is an inspection method for control modules using the Subaru Select Monitor communication line (K-line).
• For the control modules that read trouble code and current data using CAN communication circuit, perform diagnosis following DTCs for CAN communications.

DIAGNOSIS:
Subaru Select Monitor communication line (K-line) is open or shorted.

TROUBLE SYMPTOM:
Not communicable with Subaru Select Monitor.

WIRING DIAGRAM:

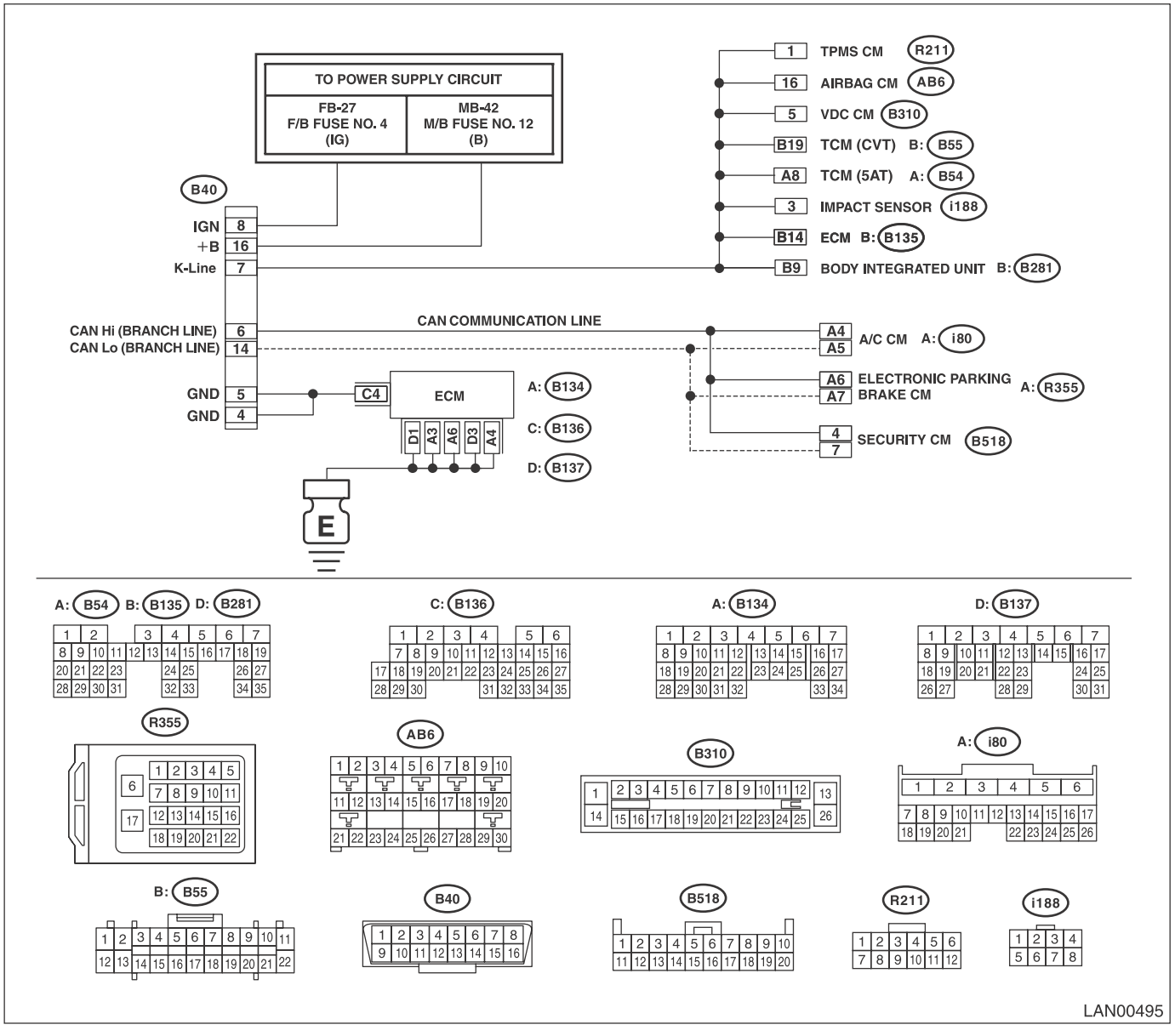

Step		Check	Yes	No
1	**CHECK COMBINATION METER.** 1) Connect the Subaru Select Monitor. 2) Start the engine. 3) Check display of combination meter.	Does the warning lights illuminate or gauge have display error?	Go to step **2**.	Go to step **4**.

	Step	Check	Yes	No
2	**CHECK SUBARU SELECT MONITOR.** 1) Connect the Subaru Select Monitor to another vehicle. 2) Check communication condition between Subaru Select Monitor and vehicle.	Is communication performed normally?	Go to step **3**.	Subaru Select Monitor unit or diagnosis cable is faulty.
3	**CHECK CAN COMMUNICATION CIRCUIT.** Check CAN communication circuit. (Refer to the inspection for CAN communication circuit.)	Is the CAN communication circuit normal?	Replace the modules that did not perform communication.	Repair the CAN communication circuit.
4	**CHECK K-LINE.** 1) Perform communication between Subaru Select Monitor and all modules. 2) Check continuity between the modules that did not communicate with Subaru Select Monitor. ***Connector & terminal*** ***(B40) No. 7 — (AB6) No. 16:*** ***(B40) No. 7 — (B310) No. 5:*** ***(B40) No. 7 — (B55) No. 19 (CVT):*** ***(B40) No. 7 — (B54) No. 8 (5AT):*** ***(B40) No. 7 — (B135) No. 14:*** ***(B40) No. 7 — (B281) No. 9:*** ***(B40) No. 7 — (R211) No. 1 (TPMS):*** ***(B40) No. 7 — (i188) No. 3 (OP):***	Is there any continuity?	Go to step **5**.	Repair or replace the open circuit portion.
5	**CHECK K-LINE.** Check continuity between K-line and chassis ground. ***Connector & terminal*** ***(B40) No. 7 — Chassis ground:***	Is there any continuity?	Repair or replace the short circuit portion.	Go to step **6**.
6	**CHECK K-LINE.** 1) Disconnect the connectors of the module connected to the K-line. 2) Check voltage between K-line and chassis ground. ***Connector & terminal*** ***(B40) No. 7 — Chassis ground:***	Is the voltage 5 V or more with IG ON?	Repair or replace the short circuit portion.	Go to step **7**.
7	**CHECK GROUND CIRCUIT.** Check continuity of ground circuit. ***Connector & terminal*** ***(B40) No. 4 — Chassis ground:*** ***(B40) No. 5 — Chassis ground:***	Is there any continuity?	Go to step **9**.	Go to step **8**.
8	**CHECK HARNESS.** 1) Disconnect the connector from ECM. 2) Check continuity between data link connector and ECM. ***Connector & terminal*** ***(B40) No. 4 — (B137) No. 4:*** ***(B40) No. 5 — (B137) No. 4:***	Is there any continuity?	Check ECM ground.	Repair or replace the open circuit portion.
9	**CHECK POWER SUPPLY CIRCUIT.** Check the power supply circuit for data link connector. ***Connector & terminal*** ***(B40) No. 8 (+) — Chassis ground (–):*** ***(B40) No. 16 (+) — Chassis ground (–):***	Is the voltage 10 V or more?	The vehicle is normal.	Check the power supply circuits to the data link connector.

CAUTION:
When replacing body integrated unit on the model with immobilizer system, refer to the "PC application help for Subaru Select Monitor".

B: DTC U1201 CAN-HS COUNTER ABNORMAL

DTC DETECTING CONDITION:

Communication is unstable because of high speed CAN communication error.

TROUBLE SYMPTOM:

- Display of combination meter indicates faulty.
- Control faulty may occur due to CAN communication error.

WIRING DIAGRAM:

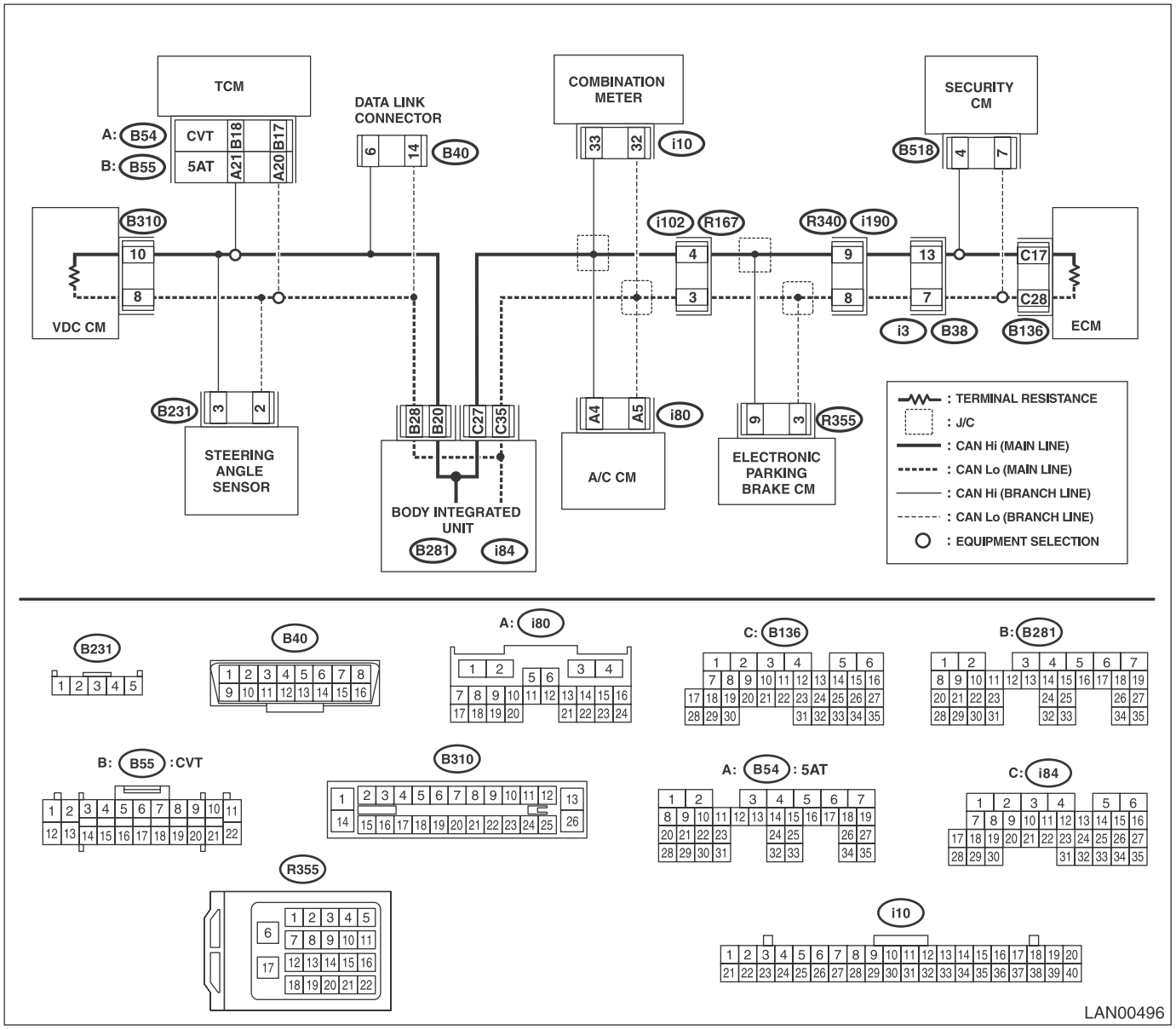

Step		Check	Yes	No
1	**CHECK CAN COMMUNICATION CIRCUIT.** Check CAN communication circuit. <Ref. to LAN(diag)-12, PROCEDURE, CAN Communication Circuit Check.>	Is CAN communication circuit faulty?	Repair the faulty portion, following the diagnosis procedure.	Go to step **2**.

	Step	Check	Yes	No
2	**CHECK DTC.** 1) Start the engine. 2) Using the Subaru Select Monitor, read DTC of CAN system.	Is U1202 a current malfunction?	Perform the diagnosis of U1202. <Ref. to LAN(diag)-49, DTC U1201 CAN-HS COUNTER ABNORMAL, Diagnostic Procedure with Diagnostic Trouble Code (DTC).>	Go to step **3**.
3	**CHECK DTC.** Check the displayed DTC.	Is U1201 a current malfunction?	Go to step **4**.	It may be a temporary communication malfunction. Perform the clear memory.
4	**CHECK DTC.** 1) Turn the ignition switch to ON. 2) Using the Subaru Select Monitor, read DTC of CAN system.	Is U1201 a current malfunction?	Go to step **5**.	It may be a temporary communication malfunction. Perform the clear memory.
5	**CHECK CONTROL MODULE.** 1) Turn the ignition switch to OFF. 2) Disconnect the control modules other than body integrated unit in order. NOTE: When disconnecting ECM or VDC CM, connect resistance of 120 Ω between CAN Hi and CAN Lo as an alternative of end resistance. 3) Turn the ignition switch to ON. 4) Using the Subaru Select Monitor, read DTC of CAN system.	Is there any control module that U1201 is not detected as current malfunction?	Replace the control module.	Repeat 1) to 4) in step 5 until U1201 is not detected.

C: DTC U1202 CAN-HS BUS OFF

DTC DETECTING CONDITION:

Integrated unit communication is shut down because of high speed CAN error.

TROUBLE SYMPTOM:

CAN communication is not normal.

WIRING DIAGRAM:

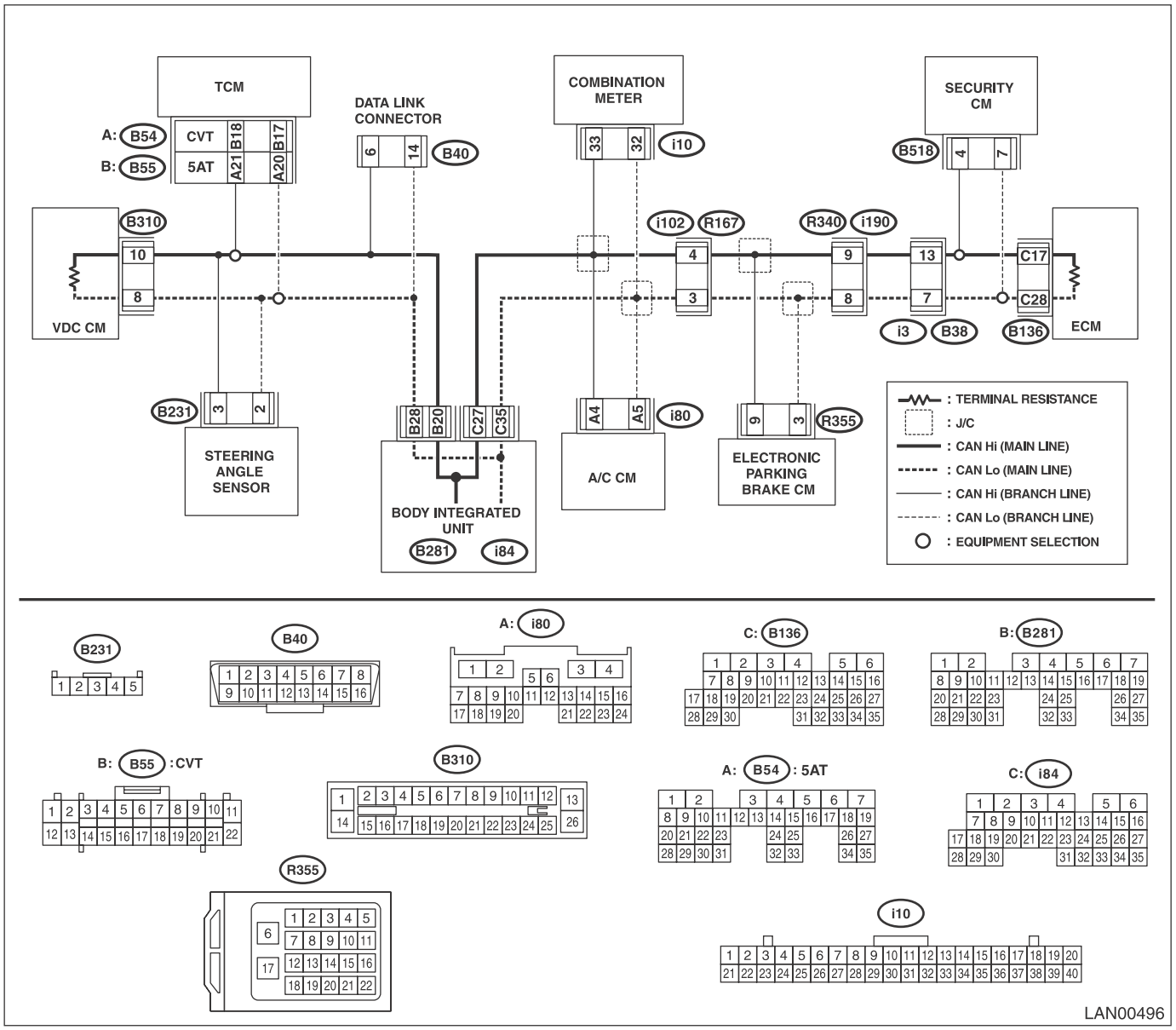

Step		Check	Yes	No
1	**CHECK CAN COMMUNICATION CIRCUIT.** Check CAN communication circuit. <Ref. to LAN(diag)-12, PROCEDURE, CAN Communication Circuit Check.>	Is CAN communication circuit faulty?	Repair the faulty portion, following the diagnosis procedure.	Go to step **2**.
2	**CHECK DTC.** 1) Start the engine. 2) Using the Subaru Select Monitor, read DTC of CAN system.	Is U1202 a current malfunction?	Go to step **3**.	It may be a temporary poor contact. Perform the clear memory.

	Step	Check	Yes	No
3	**CHECK CONTROL MODULE.** 1) Turn the ignition switch to OFF. 2) Disconnect the control modules other than body integrated unit in order. NOTE: When disconnecting ECM or VDC CM, connect resistance of 120 Ω between CAN Hi and CAN Lo as an alternative of end resistance. 3) Turn the ignition switch to ON. 4) Using the Subaru Select Monitor, read DTC of CAN system.	Is there any control module that U1201 is not detected as current malfunction?	Replace the control module.	Repeat 1) to 4) in step 3 until U1202 is not detected.

D: DTC U1211 CAN-HS ECM DATA ABNORMAL

DTC DETECTING CONDITION:
Defective data from ECM.
TROUBLE SYMPTOM:
Defective data on CAN communication occurs.
WIRING DIAGRAM:

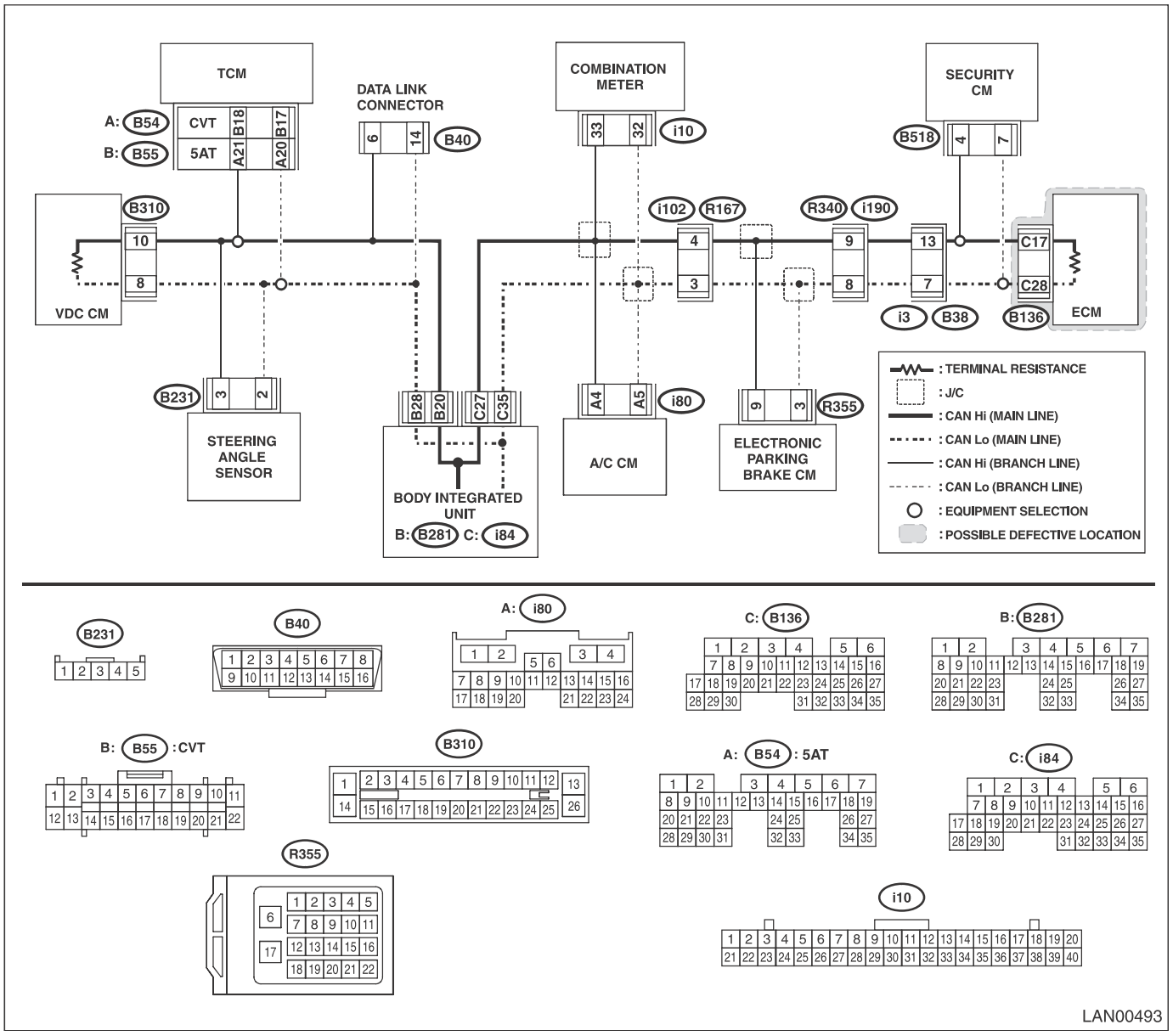

Step		Check	Yes	No
1	**CHECK DTC.** Using the Subaru Select Monitor, read all DTCs.	Is there DTC other than CAN system?	Perform the diagnosis according to DTCs for other control modules.	Go to step **2**.
2	**CHECK DTC.** Check DTC indicated in CAN system.	Is U1211 a current malfunction?	Go to step **3**.	Go to step **4**.

	Step	Check	Yes	No
3	**CHECK DTC.** 1) Turn the ignition switch to OFF. 2) Disconnect the connector from ECM. 3) Connect the disconnected connectors. 4) Using the Subaru Select Monitor, read DTC of CAN system.	Is U1211 a current malfunction?	Replace the ECM. <Ref. to FU(H6DO)-50, Engine Control Module (ECM).>	Go to step **4**.
4	**CHECK HARNESS.** 1) Shake the harness, and check for poor contact. 2) Using the Subaru Select Monitor, read DTC of CAN system.	Is U1202 a current malfunction?	Repair the poor contact of harness, or replace the harness.	Go to step **5**.
5	**CHECK CONNECTOR.** Check the connecter used for high speed CAN for poor contact.	Is there poor contact of connector?	Repair the connector that has poor contact, or replace harness.	It may be a temporary communication malfunction. Delete the DTC.

E: DTC U1212 CAN-HS TCM DATA ABNORMAL

DTC DETECTING CONDITION:
Received error data from TCM.
TROUBLE SYMPTOM:
SPORT indicator light blinks.
WIRING DIAGRAM:

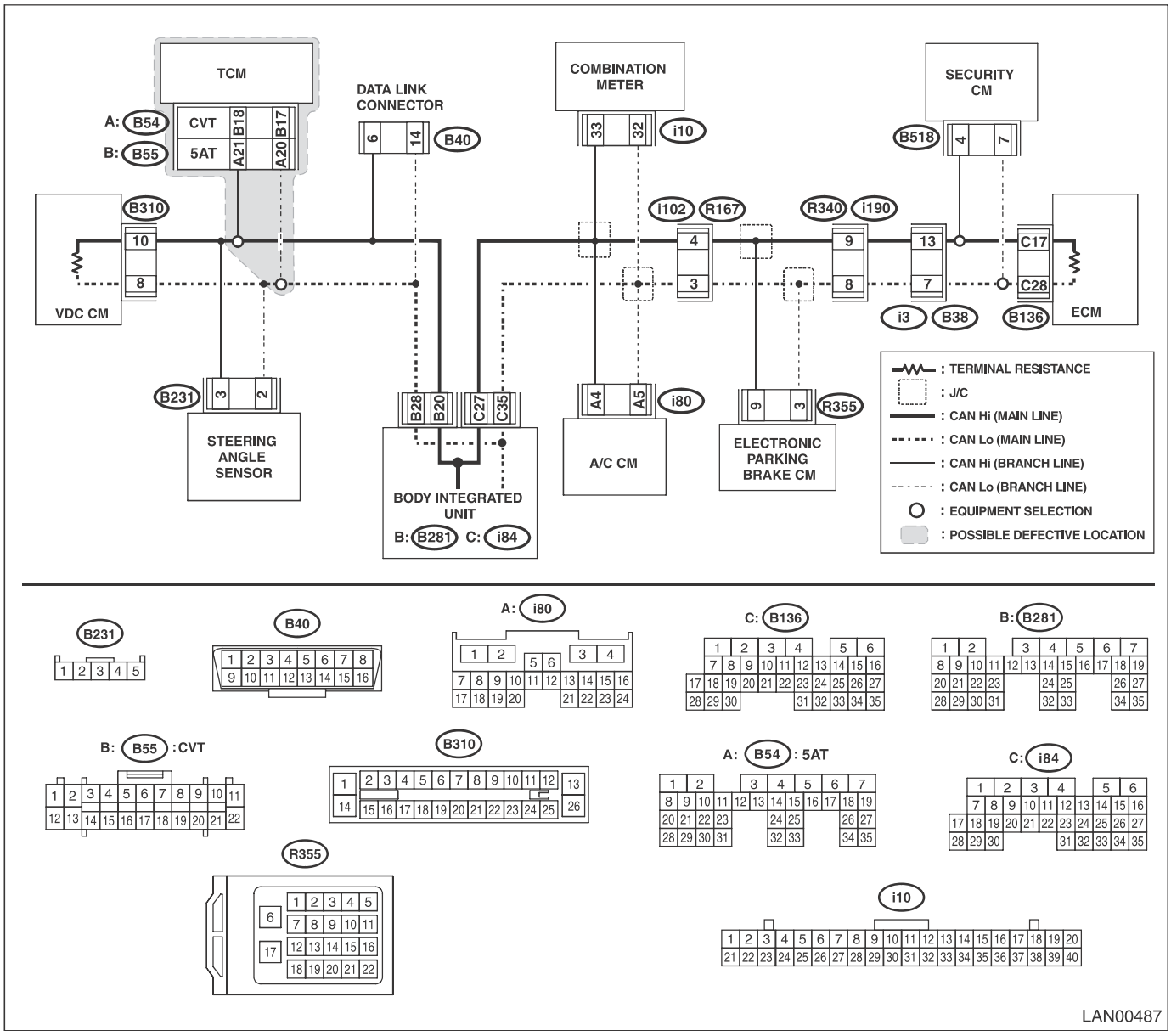

Step		Check	Yes	No
1	**CHECK DTC.** Using the Subaru Select Monitor, read all DTCs.	Is there DTC other than CAN system?	Perform the diagnosis according to DTCs for other control modules.	Go to step **2**.
2	**CHECK DTC.** Check DTC indicated in CAN system.	Is U1212 a current malfunction?	Go to step **3**.	Go to step **4**.

	Step	Check	Yes	No
3	**CHECK DTC.** 1) Turn the ignition switch to OFF. 2) Disconnect the TCM connector. 3) Connect the disconnected connectors. 4) Using the Subaru Select Monitor, read DTC of CAN system.	Is U1212 a current malfunction?	Replace the TCM. <Ref. to 5AT-58, Transmission Control Module (TCM).>	Go to step **4**.
4	**CHECK HARNESS.** 1) Shake the harness, and check for poor contact. 2) Using the Subaru Select Monitor, read DTC of CAN system.	Is U1212 a current malfunction?	Repair the poor contact of harness, or replace the harness.	Go to step **5**.
5	**CHECK CONNECTOR.** Check the connecter used for high speed CAN for poor contact.	Is there poor contact of connector?	Repair the connector that has poor contact, or replace harness.	A temporary communication failure may be a possible cause. Clear the DTC memory.

F: DTC U1213 CAN-HS VDC DATA ABNORMAL

DTC DETECTING CONDITION:
Data from VDCCM is faulty.
TROUBLE SYMPTOM:
ABS warning light and VDC warning light illuminate.
WIRING DIAGRAM:

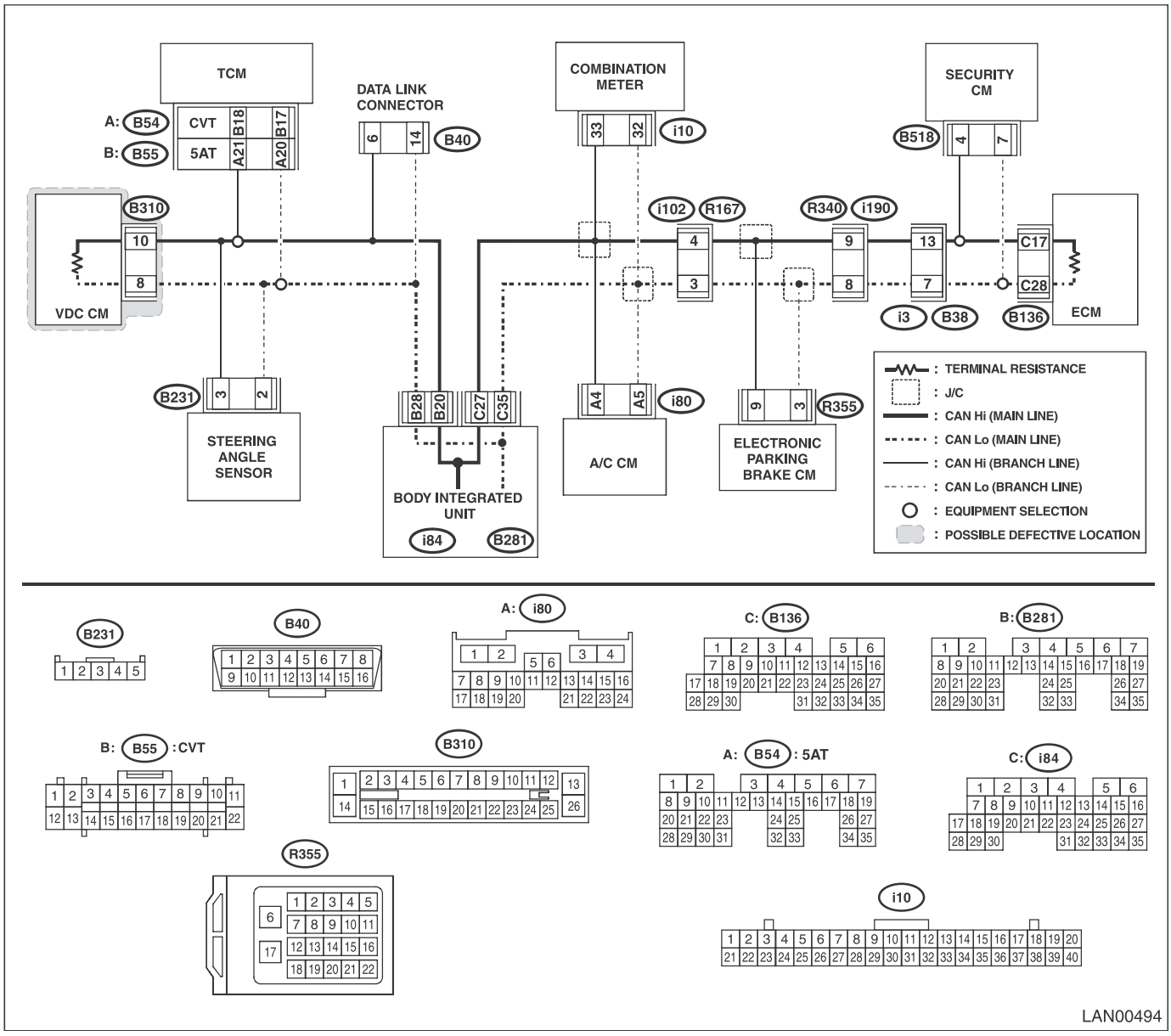

Step		Check	Yes	No
1	**CHECK DTC.** Using the Subaru Select Monitor, read all DTCs.	Is there DTC other than CAN system?	Perform the diagnosis according to DTCs for other control modules.	Go to step **2**.
2	**CHECK DTC.** Check DTC indicated in CAN system.	Is U1213 a current malfunction?	Go to step **3**.	Go to step **4**.

	Step	Check	Yes	No
3	**CHECK DTC.** 1) Turn the ignition switch to OFF. 2) Disconnect the VDC CM connector. 3) Connect the disconnected connectors. 4) Using the Subaru Select Monitor, read DTC of CAN system.	Is U1213 a current malfunction?	Replace the VDC CM. <Ref. to VDC-7, VDC Control Module and Hydraulic Control Unit (VDCCM&H/U).>	Go to step **4**.
4	**CHECK HARNESS.** 1) Shake the harness, and check for poor contact. 2) Using the Subaru Select Monitor, read DTC of CAN system.	Is U1213 a current malfunction?	Repair the poor contact of harness, or replace the harness.	Go to step **5**.
5	**CHECK CONNECTOR.** Check the connecter used for high speed CAN for poor contact.	Is there poor contact of connector?	Repair the connector that has poor contact, or replace harness.	A temporary communication failure may be a possible cause. Clear the DTC memory.

G: DTC U1219 CAN-HS EPB DATA ABNORMAL

DTC DETECTING CONDITION:
Defective data was transmitted from electronic parking brake control module.
TROUBLE SYMPTOM:
Electronic parking brake cooperation control does not operate.
WIRING DIAGRAM:

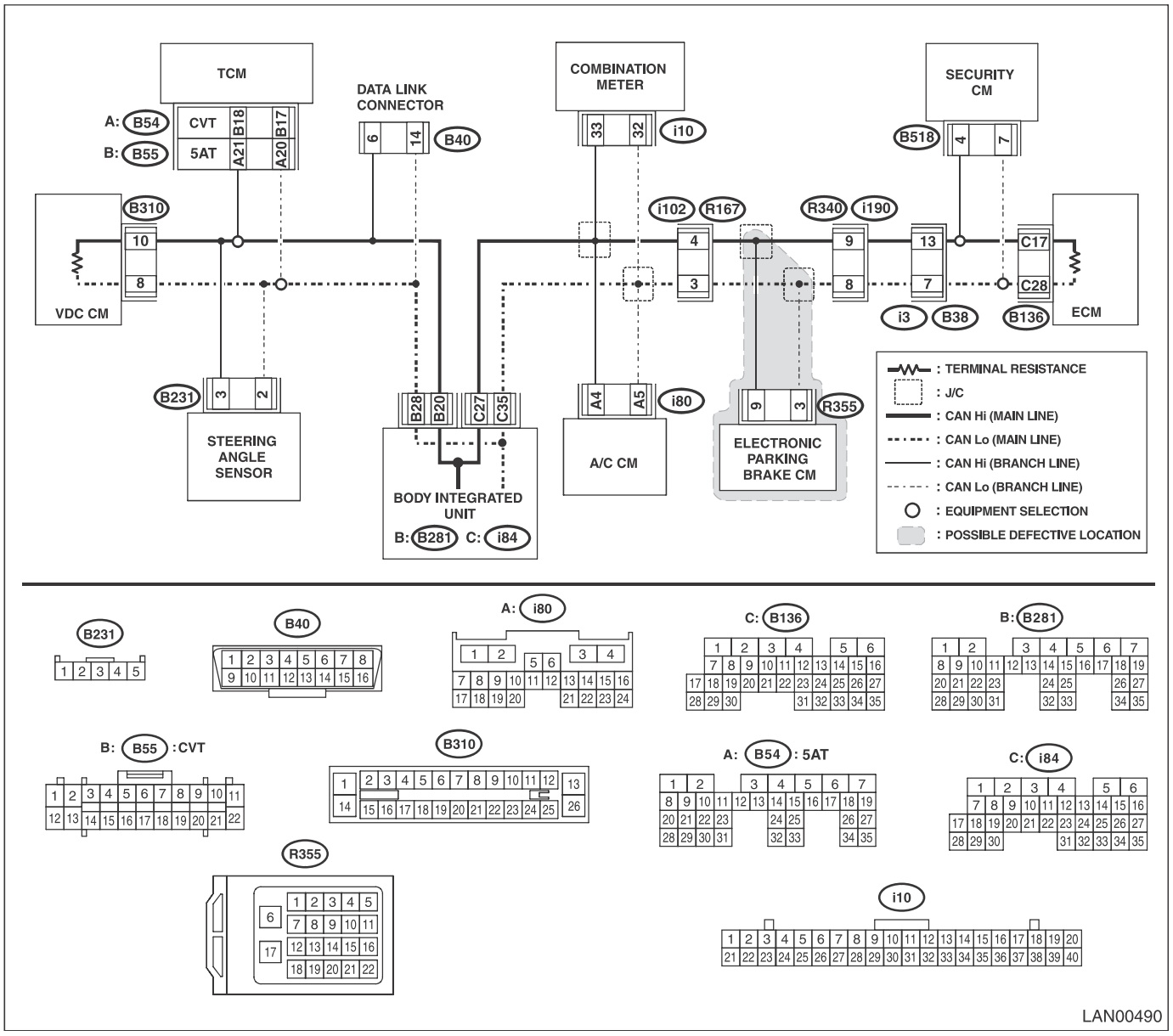

Step		Check	Yes	No
1	**CHECK DTC.** Using the Subaru Select Monitor, read all DTCs.	Is there DTC other than CAN system?	Perform the diagnosis according to DTCs for other control modules.	Go to step **2**.
2	**CHECK DTC.** Check DTC indicated in CAN system.	Is U1219 a current malfunction?	Go to step **3**.	Go to step **4**.

	Step	Check	Yes	No
3	**CHECK DTC.** Turn the ignition switch to OFF, and read the DTC again.	Is U1219 a current malfunction?	Replace the electronic parking CM. <Ref. to PB-5, REMOVAL, Parking Brake Actuator.>	Go to step **4**.
4	**CHECK ELECTRONIC PARKING CM.** 1) Disconnect the electronic parking CM connector. 2) Using the Subaru Select Monitor, perform the clear memory. 3) Using the Subaru Select Monitor, read DTC of CAN system.	Is the displayed DTC other than U1219?	Go to step **5**.	Replace the electronic parking CM. <Ref. to PB-5, REMOVAL, Parking Brake Actuator.>
5	**CHECK ELECTRONIC PARKING CM.** 1) Connect the electronic parking CM connector. 2) Using the Subaru Select Monitor, read DTC of electronic parking CM. <Ref. to PB(diag)-14, OPERATION, Subaru Select Monitor.>	Is DTC other than CAN system displayed?	Perform the diagnosis according to DTC.	Replace the body integrated unit. <Ref. to SL-72, REMOVAL, Body Integrated Unit.>

H: DTC U121A CAN-HS METER UNIT DATA ABNORMAL

DTC DETECTING CONDITION:

Defective data was transmitted from combination meter.

TROUBLE SYMPTOM:

Display of combination meter does not operate properly.

WIRING DIAGRAM:

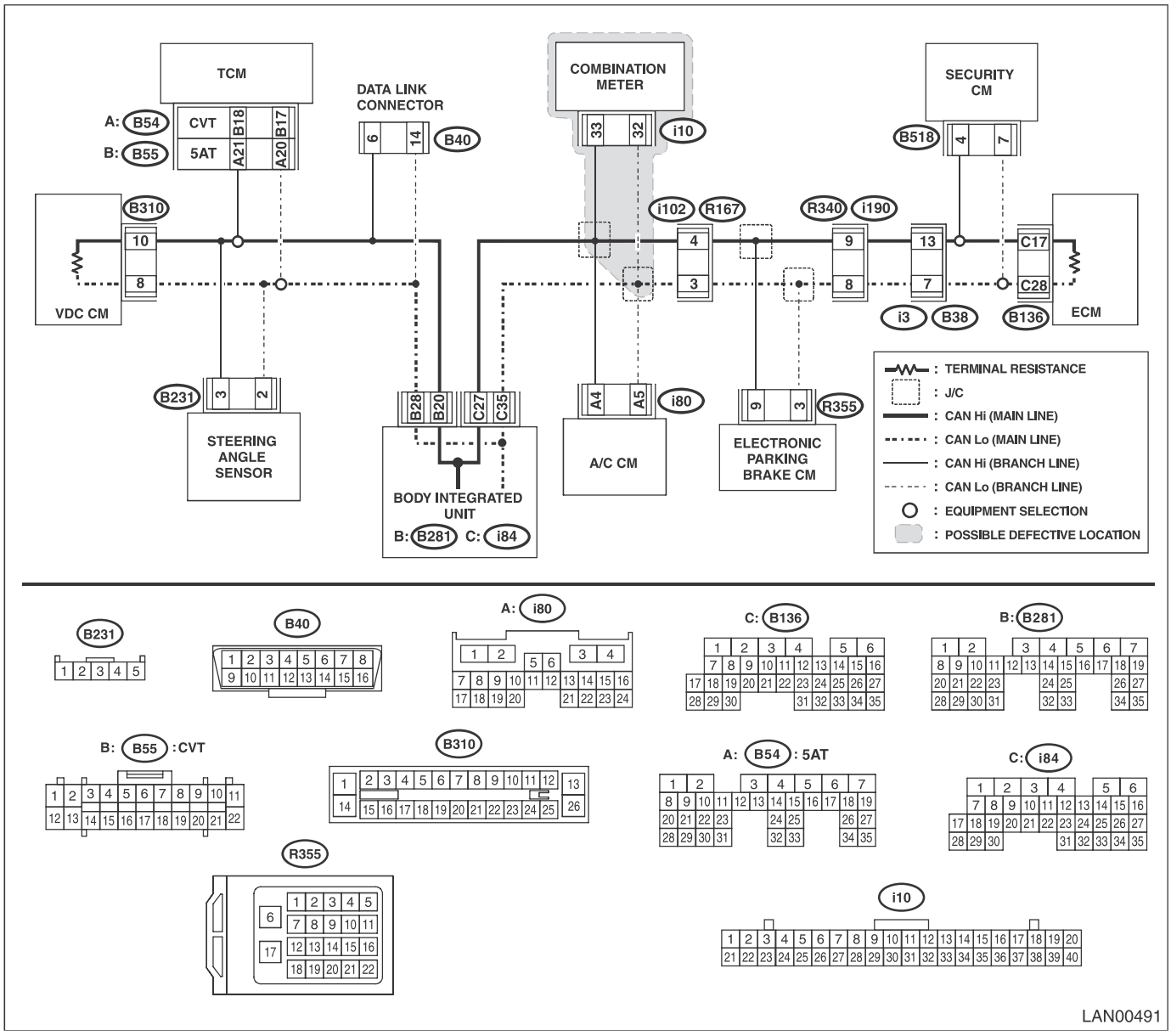

Step		Check	Yes	No
1	**CHECK DTC.** Using the Subaru Select Monitor, read all DTCs.	Is there DTC other than CAN system?	Perform the diagnosis according to DTCs for other control modules.	Go to step **2**.
2	**CHECK DTC.** Check DTC indicated in CAN system.	Is U121A a current malfunction?	Go to step **3**.	Go to step **4**.
3	**CHECK DTC.** Turn the ignition switch to OFF, and read the DTC again.	Is U121A a current malfunction?	Replace the combination meter. <Ref. to IDI-20, REMOVAL, Combination Meter.>	Go to step **4**.

	Step	Check	Yes	No
4	**CHECK COMBINATION METER.** 1) Disconnect the combination meter connector. 2) Using the Subaru Select Monitor, perform the clear memory. 3) Using the Subaru Select Monitor, read DTC of CAN system.	Is the displayed DTC other than U121A?	Go to step **5**.	Replace the combination meter. <Ref. to IDI-20, REMOVAL, Combination Meter.>
5	**CHECK COMBINATION METER.** 1) Connect the combination meter connector. 2) Using the Subaru Select Monitor, read DTC of combination meter. <Ref. to IDI-6, SELF-DIAGNOSIS DISPLAY MODE, OPERATION, Combination Meter System.>	Is DTC other than CAN system displayed?	Perform the diagnosis according to DTC.	Replace the body integrated unit. <Ref. to SL-72, REMOVAL, Body Integrated Unit.>

I: DTC U121B CAN-HS A/C DATA ABNORMAL

DTC DETECTING CONDITION:
Defective data was transmitted from A/C CM.
TROUBLE SYMPTOM:
Cooperation control of air conditioner does not operate properly.
WIRING DIAGRAM:

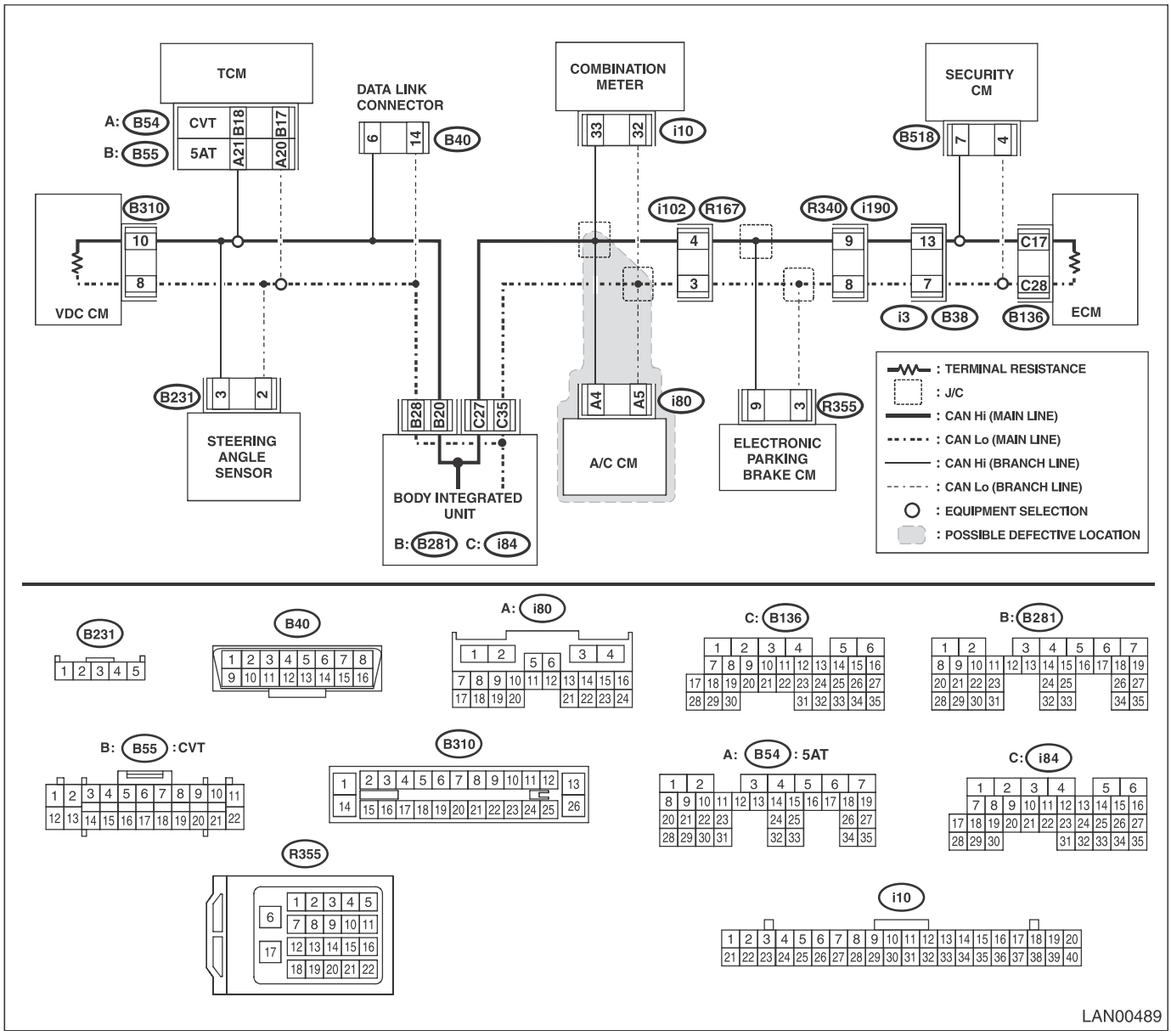

LAN00489

Step		Check	Yes	No
1	**CHECK DTC.** Using the Subaru Select Monitor, read all DTCs.	Is there DTC other than CAN system?	Perform the diagnosis according to DTCs for other control modules.	Go to step **2**.
2	**CHECK DTC.** Check DTC indicated in CAN system.	Is U121B a current malfunction?	Go to step **3**.	Go to step **4**.
3	**CHECK DTC.** Turn the ignition switch to OFF, and read the DTC again.	Is U121B a current malfunction?	Replace the A/C CM. <Ref. to AC-46, REMOVAL, Control Unit.>	Go to step **4**.

	Step	Check	Yes	No
4	**CHECK A/C CM.** 1) Disconnect the A/C CM connector. 2) Using the Subaru Select Monitor, perform the clear memory. 3) Using the Subaru Select Monitor, read DTC of CAN system.	Is the displayed DTC other than U121B?	Go to step **5**.	Replace the A/C CM. <Ref. to AC-46, REMOVAL, Control Unit.>
5	**CHECK A/C CM.** 1) Connect the A/C CM connector. 2) Using the Subaru Select Monitor, read DTC of A/C CM. <Ref. to AC(diag)-25, OPERATION, Subaru Select Monitor.>	Is DTC other than CAN system displayed?	Perform the diagnosis according to DTC.	Replace the body integrated unit. <Ref. to SL-72, REMOVAL, Body Integrated Unit.>

J: DTC U121C CAN-HS SCU DATA ABNORMAL

DTC DETECTING CONDITION:
Defective data was transmitted from SCM.
TROUBLE SYMPTOM:
Immobilizer does not operate normally.
WIRING DIAGRAM:

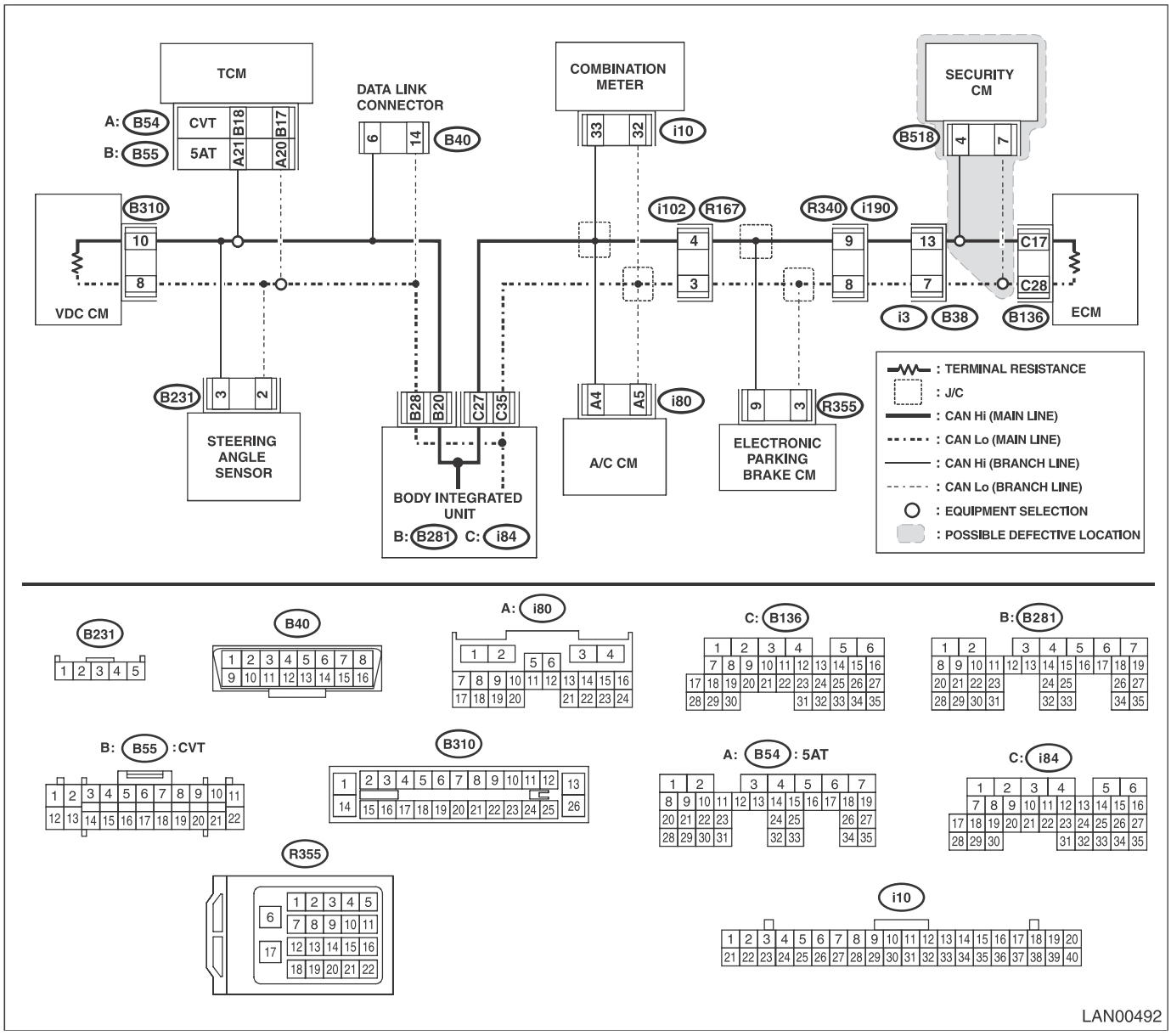

LAN00492

Step		Check	Yes	No
1	**CHECK DTC.** Using the Subaru Select Monitor, read all DTCs.	Is there DTC other than CAN system?	Perform the diagnosis according to DTCs for other control modules.	Go to step **2**.
2	**CHECK DTC.** Check DTC indicated in CAN system.	Is U121C a current malfunction?	Go to step **3**.	Go to step **4**.
3	**CHECK DTC.** Turn the ignition switch to OFF, and read the DTC again.	Is U121C a current malfunction?	Replace SCM. <Ref. to SL-66, REMOVAL, Security Control Module.>	Go to step **4**.

	Step	Check	Yes	No
4	**CHECK SCM.** 1) Disconnect the connector from SCM. 2) Using the Subaru Select Monitor, perform the clear memory. 3) Using the Subaru Select Monitor, read DTC of CAN system.	Is the displayed DTC other than U121C?	Go to step **5**.	Replace SCM. <Ref. to SL-66, REMOVAL, Security Control Module.>
5	**CHECK SCM.** 1) Connect the SCM connector. 2) Using the Subaru Select Monitor, read DTC of immobilizer. <Ref. to IM(diag)-9, OPERATION, Read Diagnostic Trouble Code (DTC).>	Is DTC other than CAN system displayed?	Perform the diagnosis according to DTC.	Replace the body integrated unit. <Ref. to SL-72, REMOVAL, Body Integrated Unit.>

K: DTC U1221 CAN-HS ECM NO-RECEIVE DATA

DTC DETECTING CONDITION:
Not received data from ECM.
TROUBLE SYMPTOM:
Cooperation control of transmission may not operate properly.
WIRING DIAGRAM:

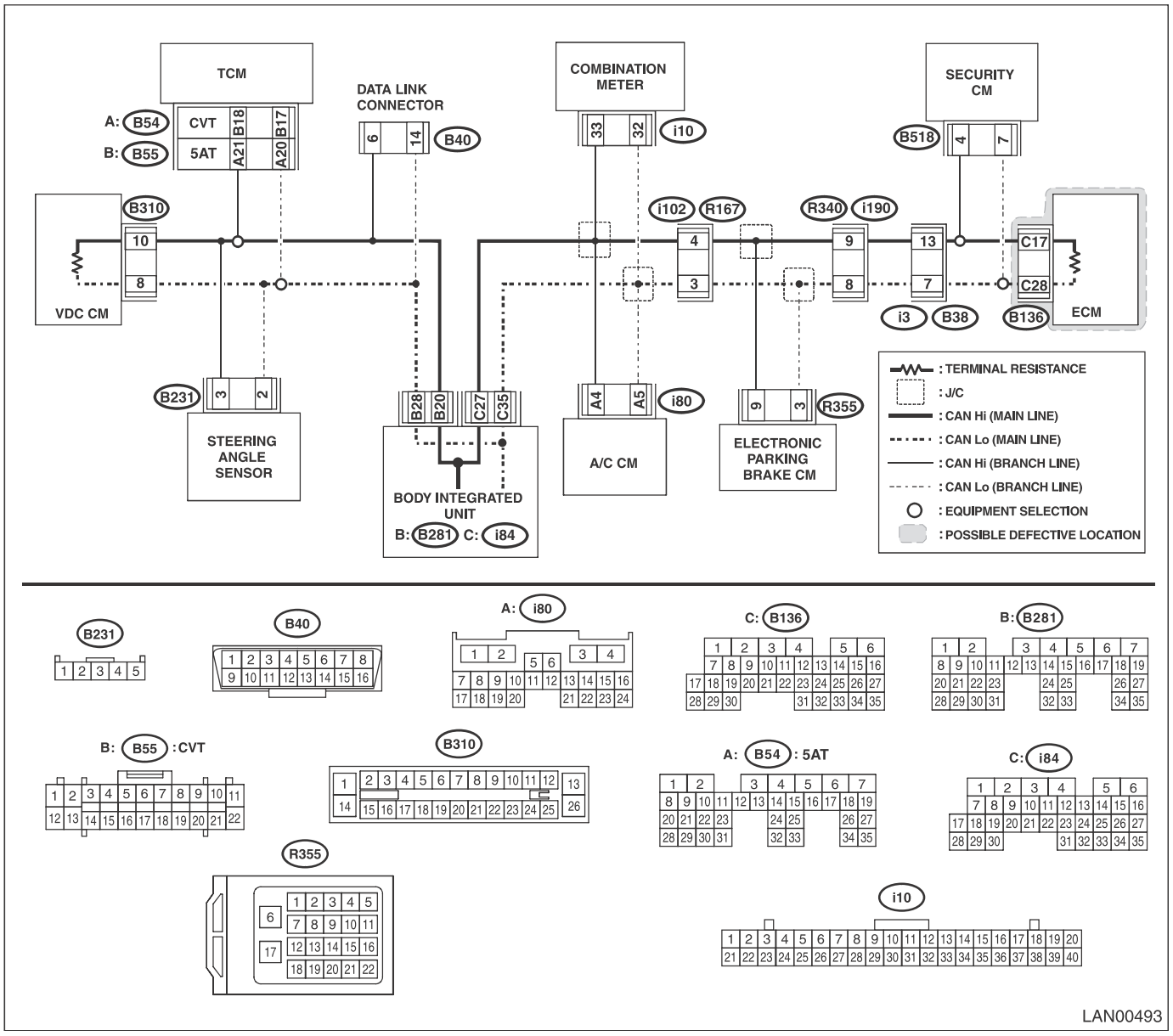

Step		Check	Yes	No
1	**CHECK DTC.** Using the Subaru Select Monitor, read all DTCs.	Is there DTC other than CAN system?	Perform the diagnosis according to DTCs for other control modules.	Go to step **2**.
2	**CHECK DTC.** Check DTC indicated in CAN system.	Is U1221 a current malfunction?	Go to step **3**.	Go to step **7**.

	Step	Check	Yes	No
3	**CHECK DTC.** 1) Turn the ignition switch to OFF. 2) Disconnect the control module connector that is connected to high speed CAN. 3) Connect the disconnected connectors. 4) Using the Subaru Select Monitor, read DTC of CAN system.	Is U1221 a current malfunction?	Go to step **4**.	Go to step **7**.
4	**CHECK HARNESS.** 1) Turn the ignition switch to OFF. 2) Disconnect the control module connector that is connected to high speed CAN. 3) Using the tester, measure the resistance between terminals. ***Connector & terminal*** ***(B40) No. 6 — (B136) No. 17:*** ***(B40) No. 14 — (B136) No. 28:***	Is the resistance 10 Ω or less?	Go to step **5**.	Repair the open circuit of harness or replace harness.
5	**CHECK DTC.** 1) Connect the disconnected connectors. 2) Start the engine. 3) Turn the ignition switch to OFF. 4) Using the Subaru Select Monitor, read DTC of CAN system.	Is U1221 a current malfunction?	Go to step **6**.	Go to step **7**.
6	**CHECK DTC.** Using the Subaru Select Monitor, read all DTCs.	Is P1718, C0044, C0045 detected?	Replace the ECM. <Ref. to FU(H4DOTC)-57, REMOVAL, Engine Control Module (ECM).>	Replace the body integrated unit. <Ref. to SL-72, REMOVAL, Body Integrated Unit.>
7	**CHECK HARNESS.** 1) Shake the harness, and check for poor contact. 2) Using the Subaru Select Monitor, read DTC of CAN system.	Is U1221 a current malfunction?	Repair the poor contact of harness, or replace the harness.	Go to step **8**.
8	**CHECK CONNECTOR.** Check the connecter used for high speed CAN for poor contact.	Is there poor contact of connector?	Repair the connector, or replace harness.	It may be a temporary communication malfunction. Delete the DTC.

L: DTC U1222 CAN-HS TCM NO-RECEIVE DATA

DTC DETECTING CONDITION:
Not received data from TCM.
TROUBLE SYMPTOM:
Cooperation control with transmission is not performed.
WIRING DIAGRAM:

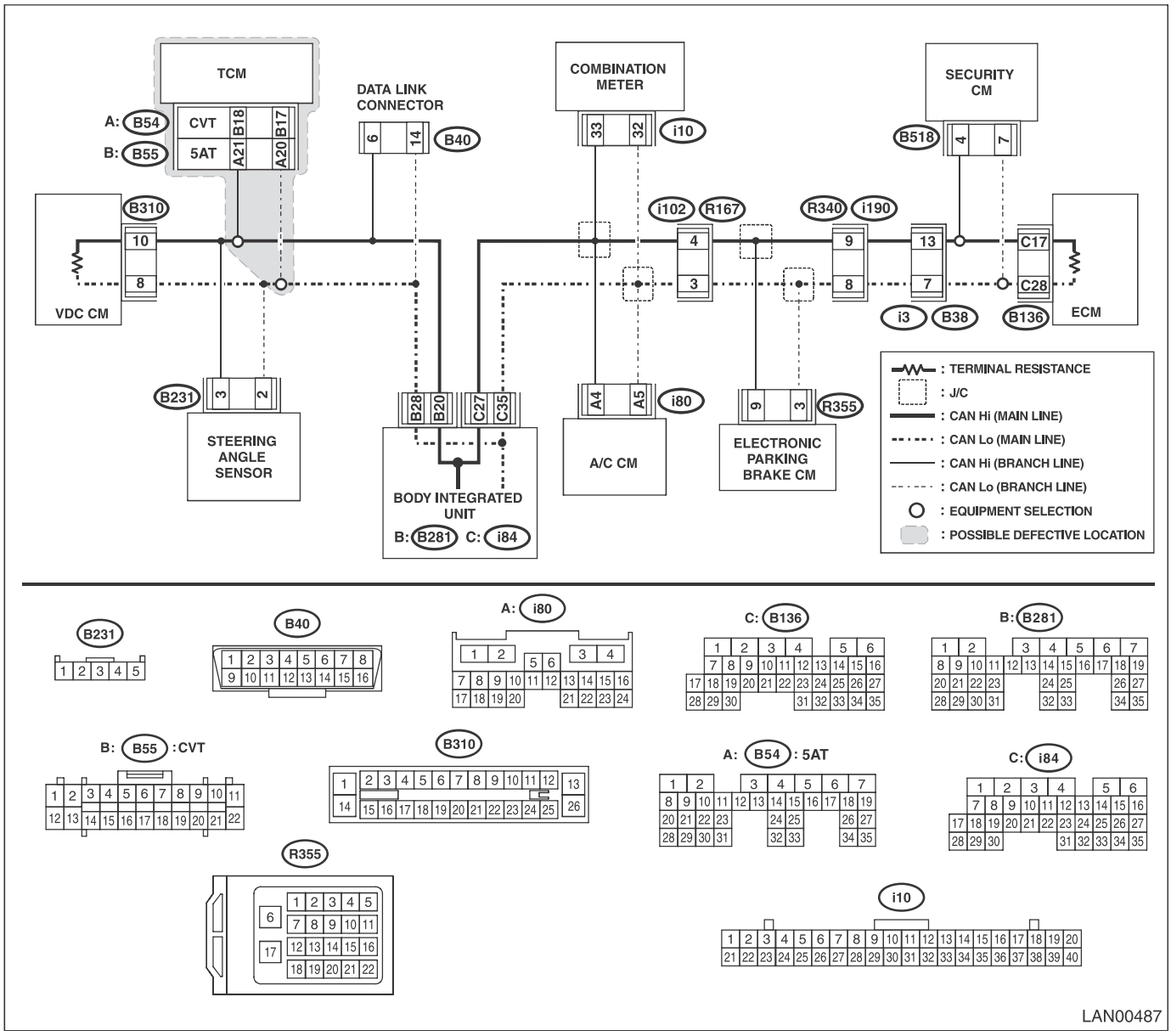

Step		Check	Yes	No
1	**CHECK DTC.** Using the Subaru Select Monitor, read all DTCs.	Is there DTC other than CAN system?	Perform the diagnosis according to DTCs for other control modules.	Go to step **2**.
2	**CHECK DTC.** Check DTC indicated in CAN system.	Is U1222 a current malfunction?	Go to step **3**.	Go to step **7**.

Step		Check	Yes	No
3	**CHECK DTC.** 1) Turn the ignition switch to OFF. 2) Disconnect the control module connector that is connected to high speed CAN. 3) Connect the disconnected connectors. 4) Using the Subaru Select Monitor, read DTC of CAN system.	Is U1222 a current malfunction?	Go to step **4**.	Go to step **7**.
4	**CHECK HARNESS.** 1) Turn the ignition switch to OFF. 2) Disconnect the control module connector that is connected to high speed CAN. 3) Using the tester, measure the resistance between terminals. ***Connector & terminal*** ***(B40) No. 6 — (B55) No. 18 (CVT):*** ***(B40) No. 14 — (B55) No. 17 (CVT):*** ***(B40) No. 6 — (B54) No. 21 (5AT):*** ***(B40) No. 14 — (B54) No. 20 (5AT):***	Is the resistance 10 Ω or less?	Go to step **5**.	Repair the open circuit of harness or replace harness.
5	**CHECK DTC.** 1) Connect the disconnected connectors. 2) Start the engine. 3) Turn the ignition switch to OFF (stop the engine). 4) Using the Subaru Select Monitor, read DTC of CAN system.	Is U1222 a current malfunction?	Go to step **6**.	Go to step **7**.
6	**CHECK DTC.** Using the Subaru Select Monitor, read all DTCs.	Is P1718, C0044, C0045 detected?	Replace the TCM. <Ref. to 5AT-58, REMOVAL, Transmission Control Module (TCM).>	Replace the body integrated unit. <Ref. to SL-72, REMOVAL, Body Integrated Unit.>
7	**CHECK HARNESS.** 1) Shake the harness, and check for poor contact. 2) Using the Subaru Select Monitor, read DTC of CAN system.	Is U1222 a current malfunction?	Repair the open circuit of harness or replace harness.	Go to step **8**.
8	**CHECK CONNECTOR.** Check the connecter used for high speed CAN for poor contact.	Is there poor contact of connector?	Repair the connector, or replace harness.	It may be a temporary communication malfunction. Delete the DTC.

M: DTC U1223 CAN-HS VDC NO-RECEIVE DATA

DTC DETECTING CONDITION:
No data from VDCCM is received.
TROUBLE SYMPTOM:
ABS warning light and VDC warning light illuminate.
WIRING DIAGRAM:

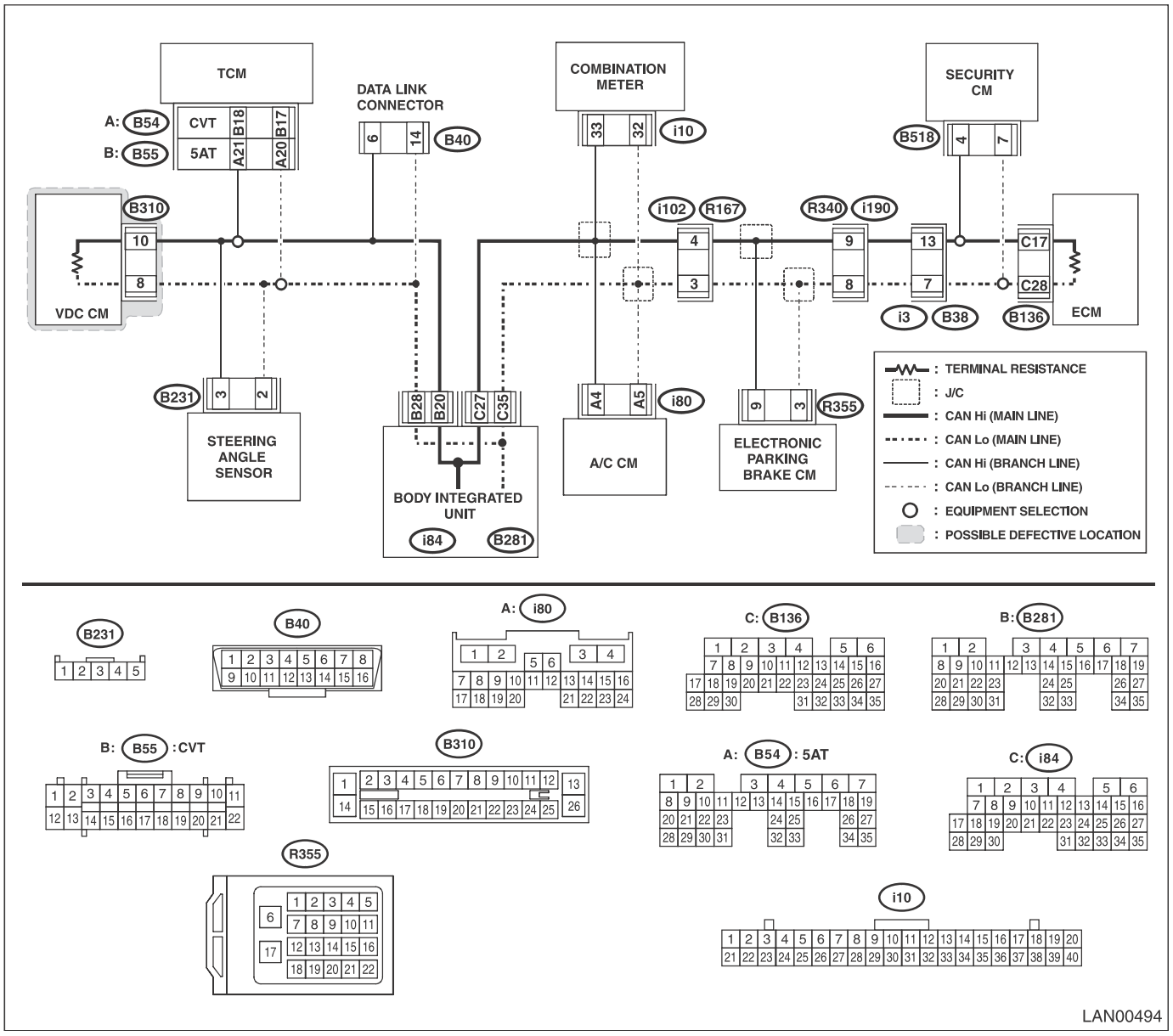

Step		Check	Yes	No
1	**CHECK DTC.** Using the Subaru Select Monitor, read all DTCs.	Is there DTC other than CAN system?	Perform the diagnosis according to DTCs for other control modules.	Go to step **2**.
2	**CHECK DTC.** Check DTC indicated in CAN system.	Is U1223 a current malfunction?	Go to step **3**.	Go to step **7**.

Step		Check	Yes	No
3	**CHECK DTC.** 1) Turn the ignition switch to OFF. 2) Disconnect the control module connector that is connected to high speed CAN. 3) Connect the disconnected connectors. 4) Using the Subaru Select Monitor, read DTC of CAN system.	Is U1223 a current malfunction?	Go to step **4**.	Go to step **7**.
4	**CHECK HARNESS.** 1) Turn the ignition switch to OFF. 2) Disconnect the control module connector that is connected to high speed CAN. 3) Using the tester, measure the resistance between terminals. ***Connector & terminal*** ***(B40) No. 6 — (B310) No. 10:*** ***(B40) No. 6 — (B231) No. 3:*** ***(B40) No. 14 — (B310) No. 8:*** ***(B40) No. 14 — (B231) No. 2:***	Is the resistance 10 Ω or less?	Go to step **5**.	Repair the open circuit of harness or replace harness.
5	**CHECK DTC.** 1) Connect the disconnected connectors. 2) Start the engine. 3) Turn the ignition switch to OFF. 4) Using the Subaru Select Monitor, read DTC of CAN system.	Is U1223 a current malfunction?	Go to step **6**.	Go to step **7**.
6	**CHECK DTC.** Using the Subaru Select Monitor, read all DTCs.	Is P1718 detected?	Replace the VDC CM. <Ref. to VDC-7, REMOVAL, VDC Control Module and Hydraulic Control Unit (VDCCM&H/U).>	Replace the body integrated unit. <Ref. to SL-72, REMOVAL, Body Integrated Unit.>
7	**CHECK HARNESS.** 1) Shake the harness, and check for poor contact. 2) Using the Subaru Select Monitor, read DTC of CAN system.	Is U1223 a current malfunction?	Repair the poor contact of harness, or replace the harness.	Go to step **8**.
8	**CHECK CONNECTOR.** Check the connecter used for high speed CAN for poor contact.	Is there poor contact of connector?	Repair the connector, or replace harness.	It may be a temporary communication malfunction. Delete the DTC.

N: DTC U1229 CAN-HS EPB NO-RECEIVE DATA

DTC DETECTING CONDITION:

No data from electronic parking brake control module is received.

TROUBLE SYMPTOM:

Electronic parking brake cooperation control does not operate.

WIRING DIAGRAM:

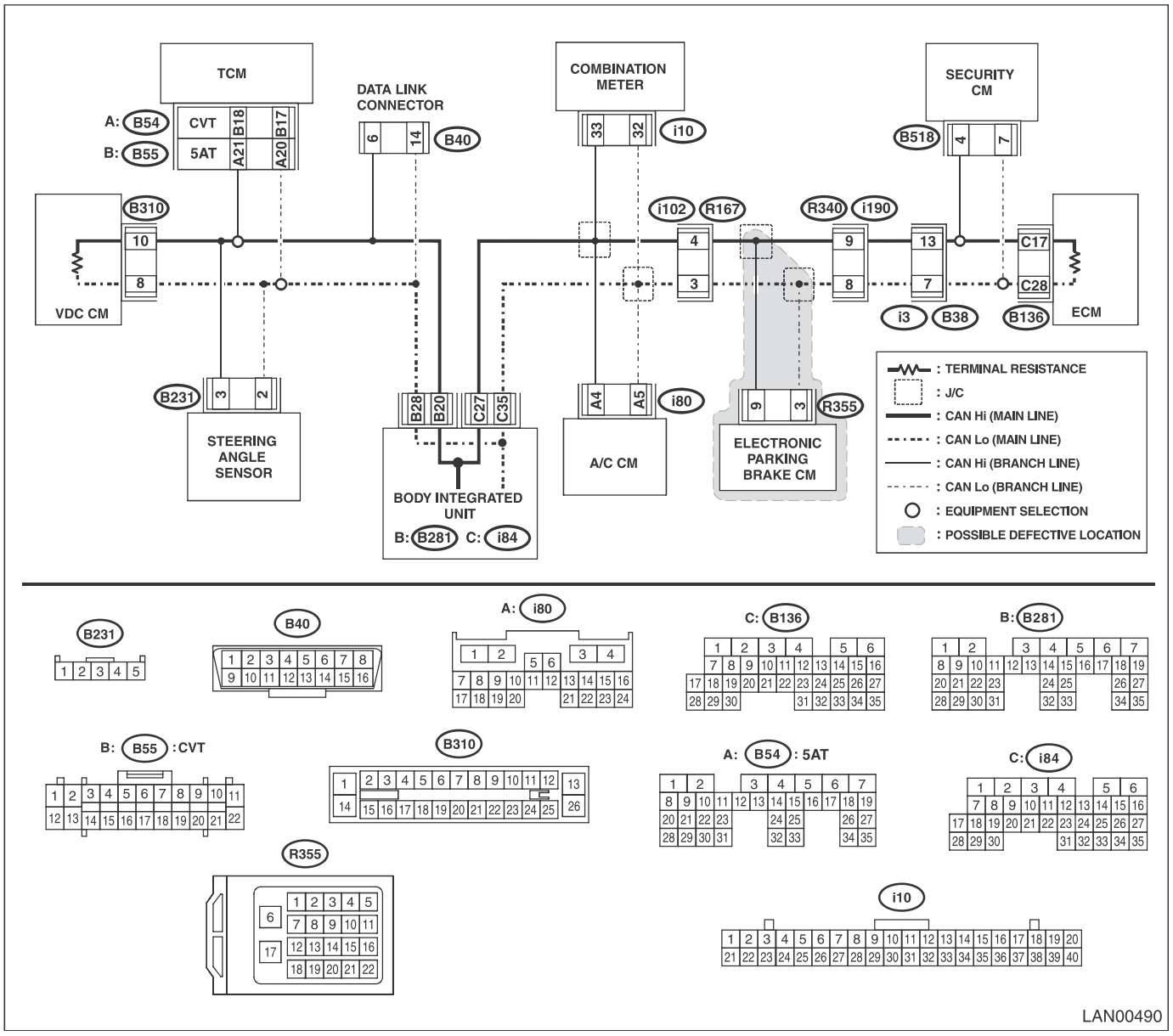

Step		Check	Yes	No
1	**CHECK DTC.** Using the Subaru Select Monitor, read all DTCs.	Is there DTC other than CAN system?	Perform the diagnosis according to DTCs for other control modules.	Go to step **2**.
2	**CHECK DTC.** Check DTC indicated in CAN system.	Is U1229 a current malfunction?	Go to step **3**.	Go to step **4**.

	Step	Check	Yes	No
3	**CHECK DTC.** Turn the ignition switch to OFF, and read the DTC again.	Is U1229 a current malfunction?	Replace the electronic parking CM. <Ref. to PB-5, REMOVAL, Parking Brake Actuator.>	Go to step **4**.
4	**CHECK ELECTRONIC PARKING CM.** 1) Disconnect the electronic parking CM connector. 2) Using the Subaru Select Monitor, perform the clear memory. 3) Using the Subaru Select Monitor, read DTC of CAN system.	Is the displayed DTC other than U1229?	Go to step **5**.	Replace the electronic parking CM. <Ref. to PB-5, REMOVAL, Parking Brake Actuator.>
5	**CHECK ELECTRONIC PARKING CM.** 1) Connect the electronic parking CM connector. 2) Using the Subaru Select Monitor, read DTC of electronic parking CM. <Ref. to PB(diag)-14, OPERATION, Subaru Select Monitor.>	Is DTC other than CAN system displayed?	Perform the diagnosis according to DTC.	Replace the body integrated unit. <Ref. to SL-72, REMOVAL, Body Integrated Unit.>

O: DTC U122A CAN-HS METER NO-RECEIVE DATA

DTC DETECTING CONDITION:
No data received from combination meter.
TROUBLE SYMPTOM:
Display of combination meter does not operate properly.
WIRING DIAGRAM:

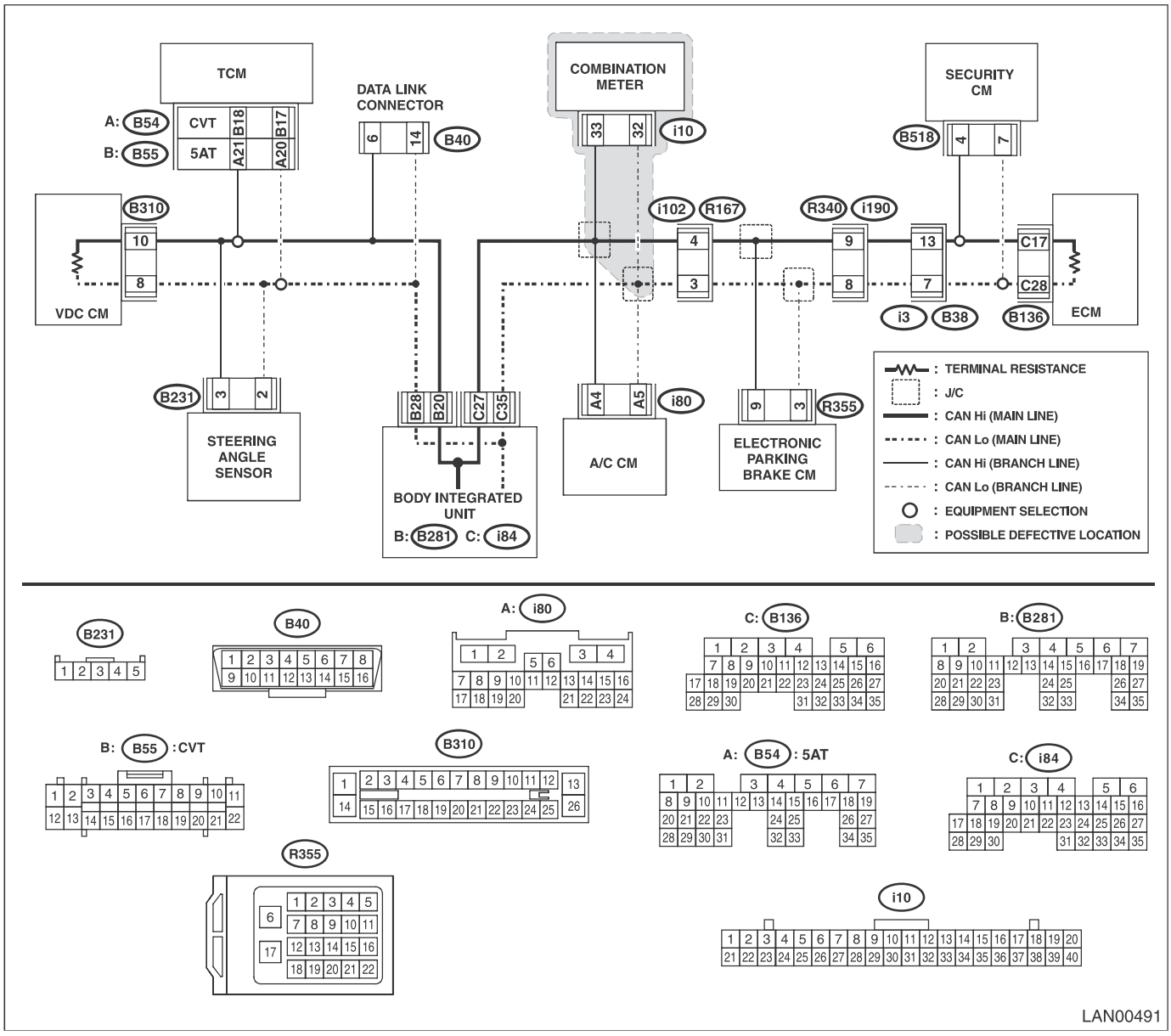

Step		Check	Yes	No
1	**CHECK DTC.** Using the Subaru Select Monitor, read all DTCs.	Is there DTC other than CAN system?	Perform the diagnosis according to DTCs for other control modules.	Go to step **2**.
2	**CHECK DTC.** Check DTC indicated in CAN system.	Is U122A a current malfunction?	Go to step **3**.	Go to step **4**.
3	**CHECK DTC.** Turn the ignition switch to OFF, and read the DTC again.	Is U122A a current malfunction?	Replace the combination meter. <Ref. to IDI-20, REMOVAL, Combination Meter.>	Go to step **4**.

	Step	Check	Yes	No
4	**CHECK COMBINATION METER.** 1) Disconnect the combination meter connector. 2) Using the Subaru Select Monitor, perform the clear memory. 3) Using the Subaru Select Monitor, read DTC of CAN system.	Is the displayed DTC other than U122A?	Go to step **5**.	Replace the combination meter. <Ref. to IDI-20, REMOVAL, Combination Meter.>
5	**CHECK COMBINATION METER.** 1) Connect the combination meter connector. 2) Using the Subaru Select Monitor, read DTC of combination meter. <Ref. to IDI-6, SELF-DIAGNOSIS DISPLAY MODE, OPERATION, Combination Meter System.>	Is DTC other than CAN system displayed?	Perform the diagnosis according to DTC.	Replace the body integrated unit. <Ref. to SL-72, REMOVAL, Body Integrated Unit.>

P: DTC U122B CAN-HS A/C NO-RECEIVE DATA

DTC DETECTING CONDITION:
No data received from A/C CM.
TROUBLE SYMPTOM:
Cooperation control of air conditioner does not operate properly.
WIRING DIAGRAM:

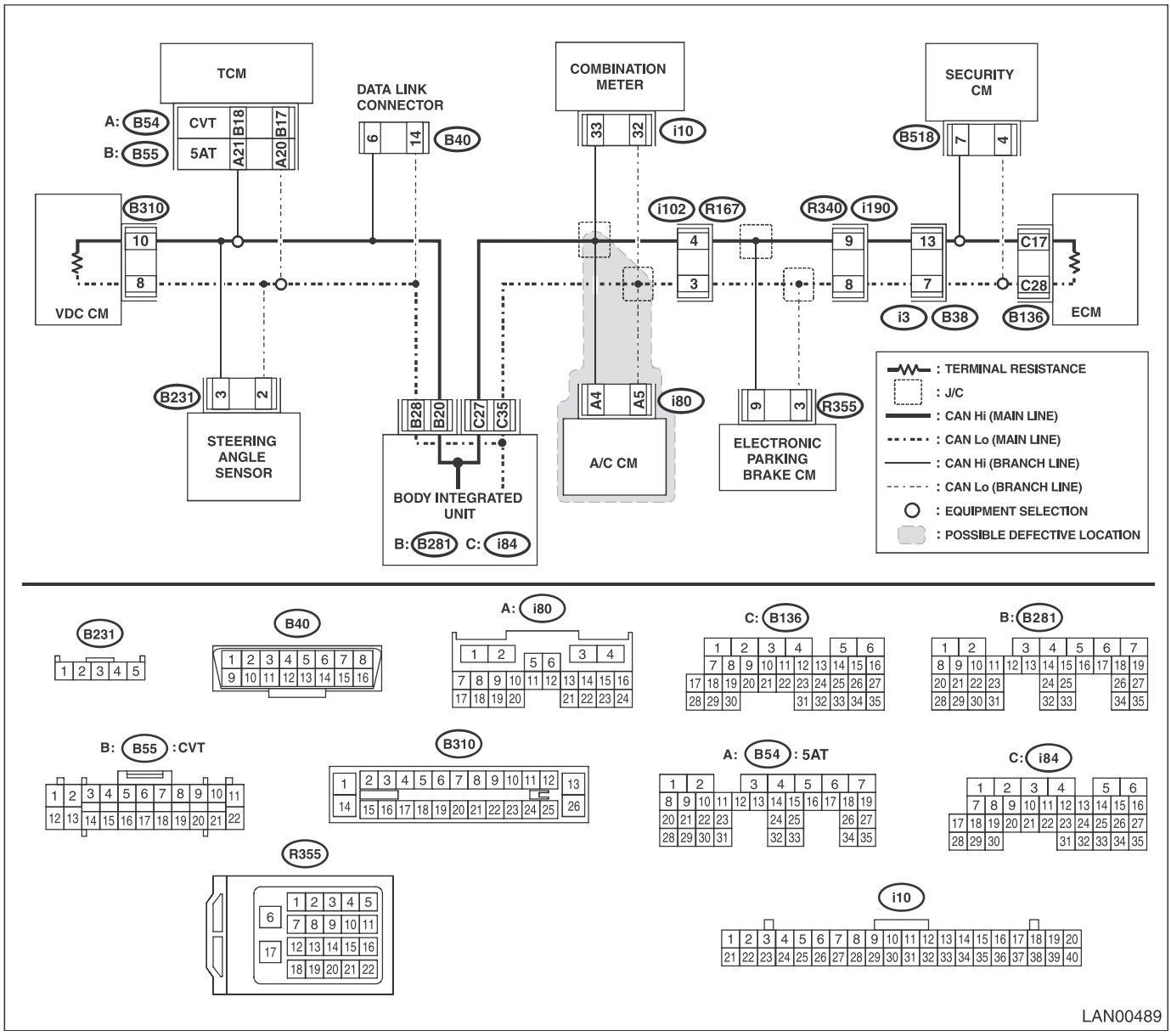

LAN00489

Step		Check	Yes	No
1	**CHECK DTC.** Using the Subaru Select Monitor, read all DTCs.	Is there DTC other than CAN system?	Perform the diagnosis according to DTCs for other control modules.	Go to step **2**.
2	**CHECK DTC.** Check DTC indicated in CAN system.	Is U122B a current malfunction?	Go to step **3**.	Go to step **4**.
3	**CHECK DTC.** Turn the ignition switch to OFF, and read the DTC again.	Is U122B a current malfunction?	Replace the A/C CM. <Ref. to AC-46, REMOVAL, Control Unit.>	Go to step **4**.

	Step	Check	Yes	No
4	**CHECK A/C CM.** 1) Disconnect the A/C CM connector. 2) Using the Subaru Select Monitor, perform the clear memory. 3) Using the Subaru Select Monitor, read DTC of CAN system.	Is the displayed DTC other than U122B?	Go to step **5**.	Replace the A/C CM. <Ref. to AC-46, REMOVAL, Control Unit.>
5	**CHECK A/C CM.** 1) Connect the A/C CM connector. 2) Using the Subaru Select Monitor, read DTC of A/C CM. <Ref. to AC(diag)-25, OPERATION, Subaru Select Monitor.>	Is DTC other than CAN system displayed?	Perform the diagnosis according to DTC.	Replace the body integrated unit. <Ref. to SL-72, REMOVAL, Body Integrated Unit.>

Q: DTC U122C CAN-HS SCU NO-RECEIVE DATA

DTC DETECTING CONDITION:
No data received from SCM.
TROUBLE SYMPTOM:
Immobilizer does not operate normally.
WIRING DIAGRAM:

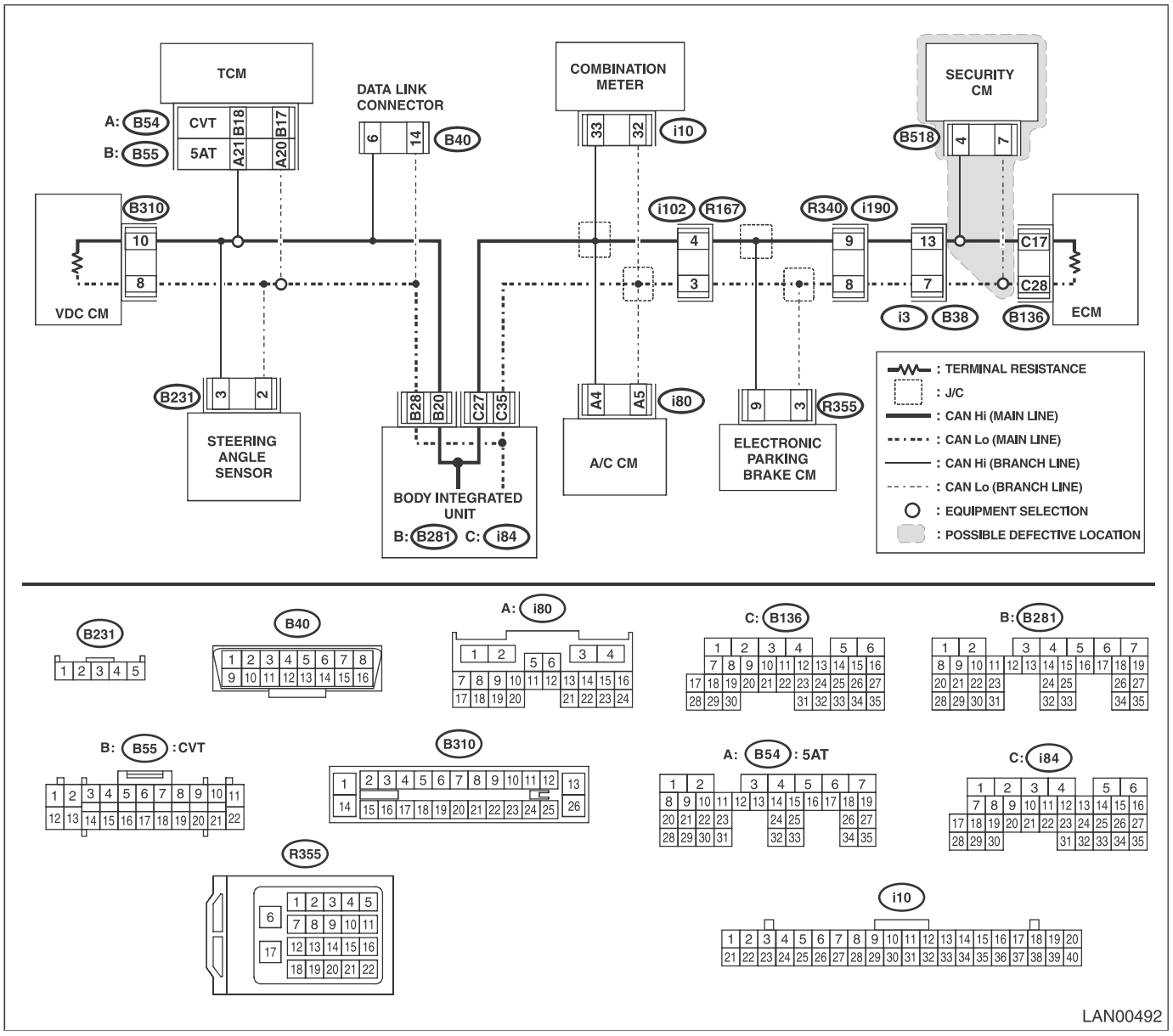

LAN00492

Step		Check	Yes	No
1	**CHECK DTC.** Using the Subaru Select Monitor, read all DTCs.	Is there DTC other than CAN system?	Perform the diagnosis according to DTCs for other control modules.	Go to step **2**.
2	**CHECK DTC.** Check DTC indicated in CAN system.	Is U122C a current malfunction?	Go to step **3**.	Go to step **4**.
3	**CHECK DTC.** Turn the ignition switch to OFF, and read the DTC again.	Is U122C a current malfunction?	Replace SCM. <Ref. to SL-66, REMOVAL, Security Control Module.>	Go to step **4**.

	Step	Check	Yes	No
4	**CHECK SCM.** 1) Disconnect the connector from SCM. 2) Using the Subaru Select Monitor, perform the clear memory. 3) Using the Subaru Select Monitor, read DTC of CAN system.	Is the displayed DTC other than U122C?	Go to step **5**.	Replace SCM. <Ref. to SL-66, REMOVAL, Security Control Module.>
5	**CHECK SCM.** 1) Connect the SCM connector. 2) Using the Subaru Select Monitor, read DTC of immobilizer. <Ref. to IM(diag)-8, OPERATION, Subaru Select Monitor.>	Is DTC other than CAN system displayed?	Perform the diagnosis according to DTC.	Replace the body integrated unit. <Ref. to SL-72, REMOVAL, Body Integrated Unit.>

12.General Diagnostic Table

A: INSPECTION

Contents	Operation	Specifications		Note
		YES	NO	
Diagnostic code	DTC is displayed when inspecting all DTCs.	Perform the diagnosis according to DTC.	System is normal.	—
Speedometer	Faster vehicle speed than the actual speed is displayed.	VDC CM data may not be received.	System is normal.	Also, check vehicle speed pulse circuit.
Fuel gauge	Fuel is present, but displayed less than actual amount.	Communication error may be present.	System is normal.	Also, check the fuel gauge.
Fuel level warning light	Fuel is present, but the light illuminates.	Communication error may be present.	System is normal.	Also, check the fuel gauge.
Engine coolant temperature light	Engine coolant temperature illuminates in red or blue.	Communication error may be present.	System is normal.	Check the engine coolant light related items.
[S], [I] or [S#] indicator	Blinking.	Communication error may be present.	System is normal.	Check the intelligent switch.
VDC indicator	Illuminating.	Communication error may be present.	System is normal.	Check that VDC is not operating.
VDC OFF indicator	Illuminating.	Communication error may be present.	System is normal.	Check that VDC is not OFF.
Electronic parking brake warning, etc.	Blinking.	Communication error may be present.	System is normal.	Check the electronic parking system as well.
Brake warning, etc.	Illuminating.	Brake fluid may be low in amount, or communication error may be present.	System is normal.	Check brake related items.
Shift position	Not displayed.	Communication error may be present.	System is normal.	Also, check AT system.
AT temperature light	Blinking.	Communication error may be present.	System is normal.	Also, check AT system.
Door indicator	Not displayed.	Communication error may be present.	System is normal.	Check the door switch.
Clearance indicator	Not illuminating.	Communication error may be present.	System is normal.	Check the combination switch.
Hi beam indicator	Not illuminating.	Communication error may be present.	System is normal.	Check the combination switch.
Front fog indicator	Not illuminating.	Communication error may be present.	System is normal.	Check the combination switch.
Illumination	Illuminating at the maximum brightness.	Communication error may be present.	System is normal.	Also, check the illumination switch.

General Diagnostic Table

Contents	Operation	Specifications		Note
		YES	NO	
Cruise control indicator	Not illuminating.	Communication error may be present.	System is normal.	Check the cruise control system.
AWD indicator	Not illuminating.	Communication error may be present.	System is normal.	Check TCM.
Hill hold indicator	Not illuminating.	Communication error may be present.	System is normal.	Also, check VDC CM.

BODY CONTROL SYSTEM (DIAGNOSTICS)

BC(diag)

		Page
1.	Basic Diagnostic Procedure	2
2.	Check List for Interview	3
3.	General Description	4
4.	Electrical Component Location	6
5.	Control Module I/O Signal	7
6.	Read Diagnostic Trouble Code (DTC)	11
7.	Clear Memory Mode	12
8.	Read Current Data	13
9.	User Customizing	17
10.	Registration Body Integrated Unit	19
11.	Function Check	23
12.	List of Diagnostic Trouble Code (DTC)	24
13.	Diagnostic Procedure with Diagnostic Trouble Code (DTC)	25
14.	General Diagnostic Table	39

1. Basic Diagnostic Procedure

A: PROCEDURE

CAUTION:
• Subaru Select Monitor is required for reading DTC, performing diagnosis and reading current data.
• Remove foreign matter (dust, water, oil, etc.) from the body integrated unit connector during removal and installation.
• For model with immobilizer, registration of immobilizer is necessary after the replacement of control module, etc. For details, refer to the "PC application help for Subaru Select Monitor".

NOTE:
• To check harness for open or short circuits, shake the suspected trouble spot or connector.
• Check List for Interview <Ref. to BC(diag)-3, Check List for Interview.>

	Step	Check	Yes	No
1	**CHECK PRE-INSPECTION.** Ask the customer when and how the trouble occurred using the interview check list. <Ref. to BC(diag)-3, Check List for Interview.>	Did you interview the customer?	Go to step **2**.	Interview the customer.
2	**BASIC INSPECTION.** Check components which might affect body control. <Ref. to BC(diag)-4, INSPECTION, General Description.>	Is the component that might influence the body control problem normal?	Go to step **3**.	Repair or replace each component.
3	**CHECK DTC.** 1) Read the DTC. <Ref. to BC(diag)-11, OPERATION, Read Diagnostic Trouble Code (DTC).> NOTE: If the communication function of the Subaru Select Monitor cannot be executed properly, check the communication circuit. <Ref. to LAN(diag)-47, COMMUNICATION FOR INITIALIZING IMPOSSIBLE, Diagnostic Procedure with Diagnostic Trouble Code (DTC).> 2) Record all DTCs and freeze frame data.	Is DTC displayed on Subaru Select Monitor?	Go to step **5**.	Go to step **4**.
4	**PERFORM GENERAL DIAGNOSTICS.** Inspect using "General Diagnostics Table". <Ref. to BC(diag)-39, General Diagnostic Table.>	Is result of inspection OK?	The body control system is normal.	Go to step **5**.
5	**PERFORM DIAGNOSIS.** 1) Correct the cause of trouble. 2) Perform the Clear Memory Mode. <Ref. to BC(diag)-12, OPERATION, Clear Memory Mode.> 3) Read the DTC. <Ref. to BC(diag)-11, OPERATION, Read Diagnostic Trouble Code (DTC).>	Is DTC displayed on Subaru Select Monitor?	Repeat step 5 until DTC is not shown.	Finish the diagnosis.

2. Check List for Interview

A: CHECK

Inspect the following item about the vehicle's state.

Body Control System Check List for Interview		Date of Vehicle Bring-in	Year Month Day
Customer's name		Registration No.	Initial year of registration Year Month Date
		Vehicle model	Frame number
Interviewer	Inspector	Engine type	Odometer reading
Customer specified content			
Date and time when the trouble occurred		Frequency of trouble occurrence	
Condition of trouble occurrence		Weather	
Road conditions		Occurrence location	
Accessory installation condition			
Trouble condition			
❑ Diagnostic codes			❑ ( )

3. General Description

A: CAUTION

1. SUPPLEMENTAL RESTRAINT SYSTEM "AIRBAG"

Airbag system wiring harness is routed near the body integrated unit and body control circuits.

CAUTION:
• Do not use the electrical test equipment on all airbag system wiring harnesses and connectors.
• Be careful not to damage the airbag system wiring harness, when servicing the body control system.

B: INSPECTION

Before performing diagnosis, check the following items which might affect body control system problems.
1) Measure the battery voltage and check electrolyte.

Standard voltage: 12 V or more

Specific gravity: 1.260 or more
2) Check the fuse condition.
Make sure that ampere of the fuse is setting value, and it is not blown out.
3) Check the connecting condition of harness and harness connector.
4) Confirm settings of body integrated unit are corresponded to vehicle equipment. <Ref. to BC(diag)-19, OPERATION, Registration Body Integrated Unit.>
5) Make sure that the User Customizing of the body integrated unit matches the vehicle equipment. <Ref. to BC(diag)-17, OPERATION, User Customizing.>
6) Confirm "Factory initial setting" of body integrated unit registrations is "Market".
7) Confirm key illumination does not blink with ignition switch turned to ON.

C: PREPARATION TOOL

1. SPECIAL TOOL

ILLUSTRATION	TOOL NUMBER	DESCRIPTION	REMARKS
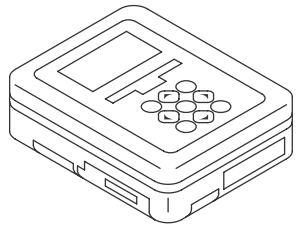 ST1B022XU0	1B022XU0	SUBARU SELECT MONITOR III KIT	Used for troubleshooting the electrical system.

2. GENERAL TOOL

TOOL NAME	REMARKS
Circuit tester	Used for measuring resistance, voltage and current.

4. Electrical Component Location

A: LOCATION

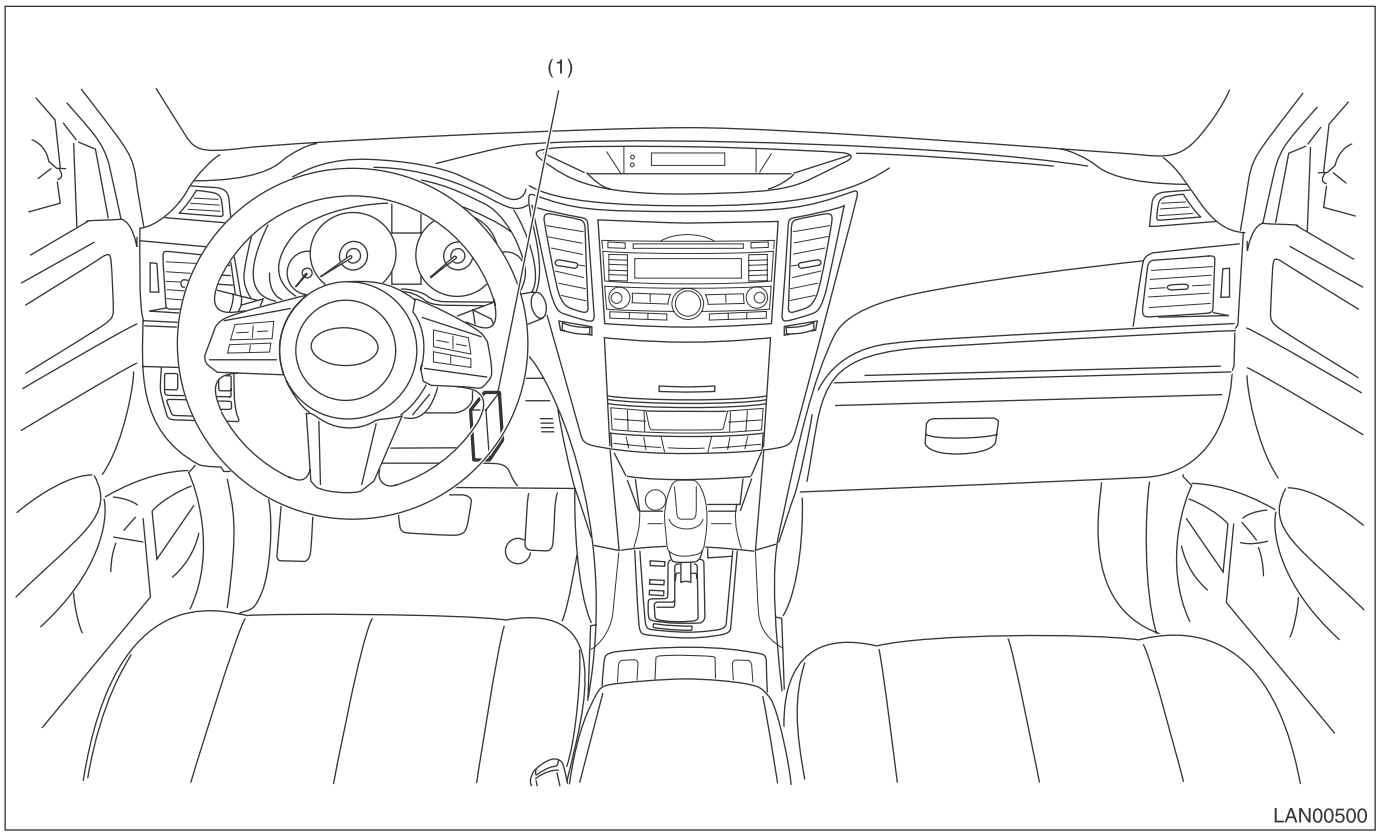

(1) Body integrated unit

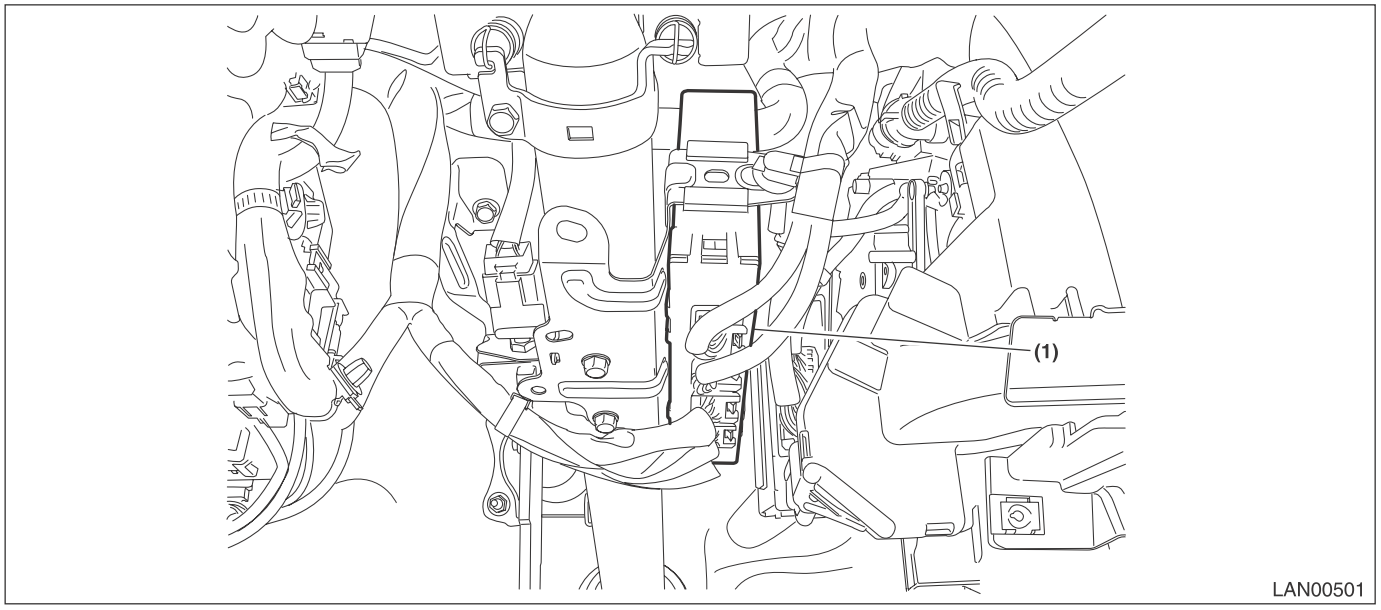

5. Control Module I/O Signal

A: ELECTRICAL SPECIFICATION

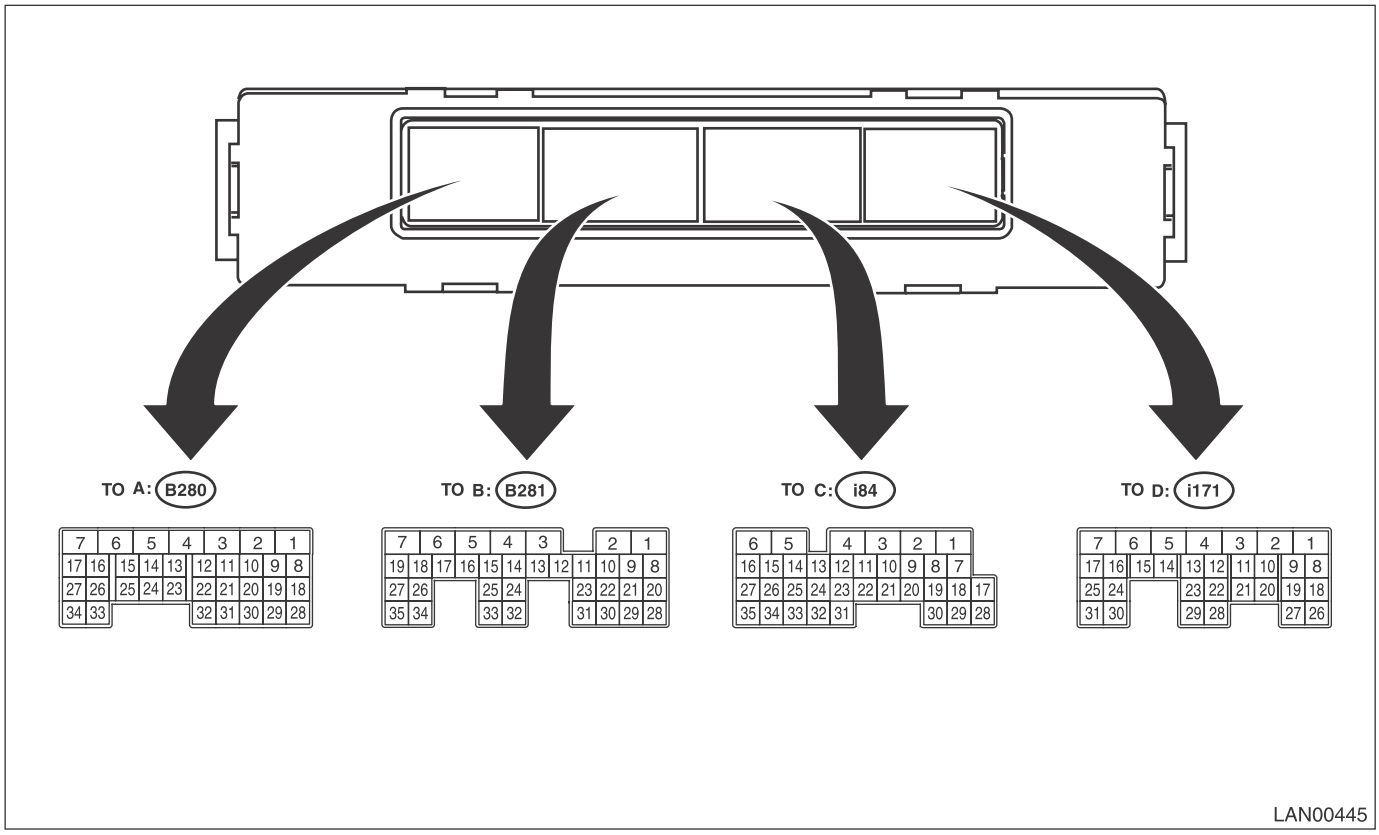

Description	Terminal No.	Signal (V or Ω)	Index
		Ignition switch ON (engine OFF)	
Ignition power supply (rear wiper)	A5 ←→ chassis ground	Less than 1.5 V → 10 — 13 V	Ignition switch OFF → ON
Battery power supply (shift lock/key lock)	B6 ←→ chassis ground	10 — 13 V	Always
Battery power supply (door lock)	D1 ←→ chassis ground	10 — 13 V	Always
Battery power supply (control)	C6 ←→ chassis ground	10 — 13 V	Always
GND	A1 ←→ chassis ground	Less than 1.5 V	Always
	B31 ←→ chassis ground		
	C1 ←→ chassis ground		
	D29 ←→ chassis ground		
Battery power supply (back-up)	B7 ←→ chassis ground	10 — 13 V	Always
Ignition power supply	D17 ←→ chassis ground	Less than 1.5 V → 10 — 13 V	Ignition switch OFF → ON
ACC power supply	D25 ←→ chassis ground	Less than 1.5 V → 10 — 13 V	Ignition switch OFF → Accessory ON
Key-in switch	A4 ←→ chassis ground	Less than 1.5 V → 10 — 13 V	When key inserted
P range SW	B21 ←→ chassis ground	8 V or more → less than 1.5 V	Shift lever shifted from other than P range to P range
Stop light SW	A10 ←→ chassis ground	Less than 1.5 V → 8 V	Stop light switch OFF → ON
Door SW (driver's)	C14 ←→ chassis ground	8 V or more → less than 1.5 V	Front right door closed → opened
Door SW (passenger's)	C13 ←→ chassis ground	8 V or more → less than 1.5 V	Front left door closed → opened
Door SW (rear right)	C25 ←→ chassis ground	8 V or more → less than 1.5 V	Rear right door closed → opened

Description	Terminal No.	Signal (V or Ω)	Index
		Ignition switch ON (engine OFF)	
Door SW (rear left)	C24 ←→ chassis ground	8 V or more → less than 1.5 V	Rear left door closed → opened
Accessory connector	B30 ←→ chassis ground	8 V or more → less than 1.5 V	Rear gate/trunk closed → opened
Rear gate SW/trunk SW	C33 ←→ chassis ground	8 V or more → less than 1.5 V	Rear gate/trunk closed → opened
Opener SW (trunk/rear gate)	C10 ←→ chassis ground	8 V or more → less than 1.5 V	Rear gate/trunk opener switch ON
Manual switch (LOCK)	C9 ←→ chassis ground	8 V or more → less than 1.5 V	Door lock switch ON
Manual switch (UNLOCK)	C20 ←→ chassis ground	8 V or more → less than 1.5 V	Door unlock switch ON
Door lock status switch (driver's)	C12	Less than 1 Ω	Door in UNLOCK status
Door lock status switch (passenger's)	C23	Less than 1 Ω	Door in UNLOCK status
Door lock status switch (driver's)	C12 ←→ chassis ground	8 V or more → less than 1.5 V	Door in UNLOCK status
Door lock status switch (passenger's)	C23 ←→ chassis ground	8 V or more → less than 1.5 V	Door in UNLOCK status
Lighting AUTO	B16 ←→ chassis ground	8 V or more → less than 1.5 V	Switch at AUTO position
Lighting II	A34 ←→ chassis ground	8 V or more → less than 1.5 V	Switch at II position
	B34 ←→ chassis ground		
Lighting I	B17 ←→ chassis ground	8 V or more → less than 1.5 V	Switch at I position
Dimmer passing	B25 ←→ chassis ground	8 V or more → less than 1.5 V	Switch at passing position
Dimmer Hi beam	B15 ←→ chassis ground	8 V or more → less than 1.5 V	Switch at Hi beam position
Front fog light SW	B26 ←→ chassis ground	8 V or more → less than 1.5 V	Front fog light switch ON
TPMS	C34	Less than 1 Ω	At answer-back of transmitter registration
Illumination sensor power supply	A9 ←→ A29	Less than 1.5 V → 8 V or more	Ignition switch OFF → ON
Illumination sensor signal	A19	47 — 1200 Hz	When AUTO
GND (Illumination sensor)	A29 ←→ chassis ground	Less than 1.5 V	Always
Rear wiper SW ON	A12 ←→ chassis ground	8 V or more → less than 1.5 V	Switch at ON position
Rear wiper SW INT	A22 ←→ chassis ground	8 V or more → less than 1.5 V	Switch at INT position
Rear washer SW	A32 ←→ chassis ground	8 V or more → less than 1.5 V	Switch at ON position
Illumination SW (Vi1)	D12 ←→ chassis ground	Approx. 5 V	While clearance light illuminates
Illumination SW (Vi2)	D22 ←→ chassis ground	0.3 — 4.5 V	
Illumination SW (Vi3)	D28 ←→ chassis ground	Less than 1.5 V	Always
Bright SW	C21 ←→ chassis ground	8 V or more → less than 1.5 V	Switch at ON position
Reverse SW (MT)	B22 ←→ chassis ground	Less than 1.5 V → 8 V or more	Reverse SW ON
Fuel level sensor	C17 ←→ chassis ground	2 — 96 Ω	Always
Seat belt SW (driver's)	C30 ←→ chassis ground	Less than 1.5 V → 8 V or more	Buckle removal → insert
Seat belt SW (passenger's)	C29 ←→ chassis ground	Less than 1.5 V → 8 V or more	Buckle removal → insert
Impact sensor	C28 ←→ chassis ground	Less than 1.5 V → 8 V or more	Apply an impact
Hi-speed CAN communication circuit 1 (Hi)	B20	Serial communication	Except for sleep status *1
Hi-speed CAN communication circuit 1 (Lo)	B28		

Description	Terminal No.	Signal (V or Ω)	Index
		Ignition switch ON (engine OFF)	
Hi-speed CAN communication circuit 2 (Hi)	C27	Serial communication	Except for sleep status *1
Hi-speed CAN communication circuit 2 (Lo)	C35		
Low-speed CAN circuit (Hi)	A11	Serial communication	Except for sleep status *1
Low-speed CAN circuit (Lo)	A21		
LIN circuit	D16	Serial communication	Except for sleep status *1
K-line	B9	Serial communication	Select Monitor communication in progress
Audio/Navigation communication circuit	D21	Serial communication	
Keyless entry communication line	D11	Serial communication	
Immobilizer antenna	B1 ←→ chassis ground	0 — 30 V	Communication with ignition key in progress
	B2 ←→ chassis ground		
Shift lock solenoid	B5 ←→ chassis ground	Less than 1.5 V → 8 V or more	When shift lock is operating (AT models)
Key lock solenoid (LOCK)	B4 ←→ B3	Less than 1.5 V → 8 V or more	LOCK status ON (AT models) *2
Key lock solenoid (UNLOCK)	B3 ←→ B4		UNLOCK status ON (AT models) *2
Rear wiper ON output	A7 ←→ chassis ground	Less than 0.5 V → 8 V or more	Rear wiper operation in progress
Rear wiper return output	A6 ←→ chassis ground	Less than 0.5 V → 8 V or more	Wiper reversed operation in progress
Door LOCK output	D2 ←→ chassis ground	Less than 0.5 V → 8 V or more	When LOCK signal is output
Door UNLOCK output	D3 ←→ chassis ground	Less than 0.5 V → 8 V or more	When UNLOCK signal is output
Rear gate/trunk UNLOCK output	D7 ←→ chassis ground	Less than 0.5 V → 8 V or more	When UNLOCK signal is output
Lighting relay power supply	A3 ←→ chassis ground	10 — 13 V	ACC or key-in SW ON
	B19 ←→ chassis ground	10 — 13 V	ACC or key-in SW ON
Lighting relay Hi output	A17 ←→ chassis ground	8 V or more → less than 1.0 V	Dimmer SW at Hi position
Lighting relay Lo output	B35 ←→ chassis ground	8 V or more → less than 1.0 V	Dimmer SW at Lo position
Lighting Lo relay output 2	A27 ←→ chassis ground	8 V or more → less than 1.0 V	Lighting II SW at ON position
Lighting relay I output	A16 ←→ chassis ground	8 V or more → less than 1.0 V	Lighting I SW at ON position
Front fog light output	A15 ←→ chassis ground	8 V or more → less than 1.0 V	Front fog light SW at ON position
DRL cancel output	A19 ←→ chassis ground	8 V or more → less than 1.0 V	When headlight switch ON or Hi beam ON, passing switch ON
Illumination output	B8	Pulse output	Illumination ON
	C16	Pulse output	Illumination ON
Key ring illumination	A25	Pulse output	Illumination ON
Room light output	C4	Pulse output	Room light ON (doors interlocked)
Map light output	D8	Pulse output	Map light ON (keyless answer-back, etc.)
Luggage/trunk light output	C3	Pulse output	Luggage/trunk at open state
Rear defogger relay output	A26 ←→ chassis ground	8 V or more → less than 1.0 V	Rear defogger SW ON

Description	Terminal No.	Signal (V or Ω)	Index
		Ignition switch ON (engine OFF)	
Wiper deicer relay output	D9 ←→ chassis ground	8 V or more → less than 1.0 V	Wiper deicer SW ON
Turn/hazard output	D18 ←→ chassis ground	8 V or more → less than 1.0 V	When answer-back is output
Security horn output	A24 ←→ chassis ground	8 V or more → less than 1.0 V	When security is operating
Security light	D15	Pulse control	When security light is illuminating
Answer-back buzzer output	A20 ←→ chassis ground	8 V or more → less than 1.0 V	When answer-back operates
Immobilizer communication	A31	Serial communication	

*1: For CAN sleep state, hold on for approx. one minute with ignition OFF and the doors, trunk, rear gate all closed.
*2: Use an oscilloscope for measurement due to short output time.

6. Read Diagnostic Trouble Code (DTC)

A: OPERATION

For details concerning the work procedure, refer to the “PC application help for Subaru Select Monitor”.

NOTE:
For details concerning DTC, refer to “List of Diagnostic Trouble Code (DTC)”. <Ref. to BC(diag)-24, List of Diagnostic Trouble Code (DTC).>

7. Clear Memory Mode

A: OPERATION

For details concerning the work procedure, refer to the “PC application help for Subaru Select Monitor”.

8. Read Current Data

A: OPERATION

For details concerning the work procedure, refer to the “PC application help for Subaru Select Monitor”.

B: LIST

Items to be displayed	Unit of measure	Remarks	Note
BATT voltage (control)	10 — 15 V	Body integrated unit input value	Always
BATT voltage (BACKUP)	10 — 15 V	Body integrated unit input value	Always
IG power supply voltage	10 — 15 V	Body integrated unit input value	Ignition switch ON
ACC voltage	10 — 15 V	Body integrated unit input value	Ignition switch ACC
Illumination VR Voltage	0 — 5 V	Body integrated unit input value	Input value from illumination volume
Illumi. output d-ratio	0 — 100%	Body integrated unit output value	Small light ON Illumination volume is other than bright.
Ambient Temperature	–40 — 87.5°C	CAN data input value	Ignition switch ON
Fuel level voltage	0 — 8.89 V	Body integrated unit input value	Ignition switch ON
Fuel level resistance	0 — 102.3 Ω	Body integrated unit input value	Ignition switch ON
number of regist.	0 — 4	Number of keyless key registered	
Front Wheel Speed	km/h	CAN data input value	Reception from VDC module
Blower Fan Steps	OFF, 1 — 5 levels, MAX	CAN data input value	Reception from air conditioner ECM
Fuel level resistance 2	0 — 102.3 Ω	CAN data output value	Reception from body integrated unit
Fuel consumption	cc/s	CAN data input value	Reception from ECM and transmission to center monitor
Coolant Temp.	–40 — 130°C	CAN data input value	Reception from ECM
Vehicle longitudinal G	m/s^2	CAN data input value	Reception from VDC module
Shift Position	1 — 4, D, N, R, P	CAN data input value	Reception from TCM
Buzzer beeping request	No beeping Belt warning Key warning Beeping pattern 1 Beeping pattern 2 Free beeping ---	CAN data output value	Reception from body integrated unit
EPB Operating status	Error Cancellation Operation Operating Cancelling Dynamic parking	CAN data input value	Reception from EPB
D-belt warning light O/P	Light ON Light blinking Light OFF	CAN data output value	Reception from body integrated unit
P-belt warning light O/P	Light ON Light blinking Light OFF	CAN data — Reception from body integrated unit	Reception from body integrated unit
Engine displacement	1.5 ℓ — 3.6 ℓ	CAN data input value	Display engine equipped
Destination Code	0 — 16	CAN data input value	—

Items to be displayed	Unit of measure	Remarks	Note
Illumination Sensor Output	0 — 1250 Hz	CAN data input value	—
key-lock warning SW	ON/OFF	Body integrated unit input value	ON when ignition key inserted
Stop Light Switch	ON/OFF	Body integrated unit input value	ON when brake pedal is depressed
Front fog lamp SW input	ON/OFF	Body integrated unit input value	When front fog light switch is ON
TPMS input	ON/OFF	Body integrated unit input value	TPMS registration answer-back signal
Driver's door SW input	ON/OFF	Body integrated unit input value	ON when driver's door is open
P-door SW input	ON/OFF	Body integrated unit input value	ON when passenger's door is open
Rear right door SW input	ON/OFF	Body integrated unit input value	ON when rear right door is open
Rear left door SW input	ON/OFF	Body integrated unit input value	ON when rear left door is open
R Gate SW input	ON/OFF	Body integrated unit input value	ON when rear gate/trunk open
Manual lock SW input	ON/OFF	Body integrated unit input value	Manual lock switch ON
Manual unlock SW input	ON/OFF	Body integrated unit input value	Manual unlock switch ON
Bright SW input	ON/OFF	Body integrated unit input value	Bright switch ON
P SW	ON/OFF	Body integrated unit input value	ON when shift range is in parking Shift lever P switch signal
MT Reverse Switch	ON/OFF	Body integrated unit input value	Reverse switch ON
R wiper ON SW input	ON/OFF	Body integrated unit input value	Rear wiper switch ON
R wiper INT SW input	ON/OFF	Body integrated unit input value	Rear wiper switch INT ON
R washer SW input	ON/OFF	Body integrated unit input value	Rear washer switch ON
Driver's Seat SW input	ON/OFF	Body integrated unit input value	Driver's seat buckle switch ON
P seatbelt SW input	ON/OFF	Body integrated unit input value	Passenger's seat buckle switch ON
Fr wiper input	ON/OFF	Body integrated unit input value	ON when front wiper is operating
R gate lock status SW input	ON/OFF	Body integrated unit input value	Displays latch state, ON when locked
Rear gate/Trunk release switch	ON/OFF	Body integrated unit input value	Rear gate/trunk release switch ON
Rr Defogger output	ON/OFF	Body integrated unit output value	ON when rear defogger relay is operating
lock actuat. LOCK output	ON/OFF	Body integrated unit output value	ON when LOCK signal is output
All seat UNLOCK output	ON/OFF	Body integrated unit output value	ON when unlock signal is output
D-seat UNLOCK output	ON/OFF	Body integrated unit output value	ON when unlock signal is output
R gate/trunk UNLK output	ON/OFF	Body integrated unit output value	ON when rear gate/trunk unlock signal is output

Items to be displayed	Unit of measure	Remarks	Note
R wiper output	ON/OFF	Body integrated unit output value	ON when rear wiper motor is operating
Shift Lock Solenoid	ON/OFF	Body integrated unit output value	ON when shift lock solenoid is operating (only AT)
Key Lock solenoid	lock/unlock	Body integrated unit output value	LOCK when key lock status
wiper deicer output	ON/OFF	Body integrated unit output value	ON when wiper deicer relay is operating
Hazard Output	ON/OFF	Body integrated unit output value	ON when answer-back signal is received or when hazard is operating
Keyless Buzzer Output	ON/OFF	Body integrated unit output value	ON when lock/unlock signal is received
Horn Output	ON/OFF	Body integrated unit output value	ON when security warning is operating
Illumination lamp O/P	ON/OFF	Body integrated unit output value	ON when illumination is illuminated
Room lamp output	ON/OFF	Body integrated unit output value	ON when keyless lock/unlock signal is received (when key in switch connector is removed)
key illumi. lamp o/p	ON/OFF	Body integrated unit output value	ON when key illumination light is illuminated
Immobilizer lamp output	ON/OFF	Body integrated unit output value	ON when immobilizer pilot light blinks
Keyless operation 1	Regist./Normal	Body integrated unit input value	When keyless registration connector connected
Keyless operation 2	Deletion/Normal	Body integrated unit input value	When keyless registration is deleted
Small Light SW	ON/OFF	Body integrated unit input value	ON when small light is illuminated
Headlamp	ON/OFF	Body integrated unit input value	ON when headlight Lo is illuminated
High Beam	ON/OFF	Body integrated unit input value	ON when headlight Hi is illuminated
Rr Defogger SW	ON/OFF	CAN data input value	Rear defogger switch ON
Number of cylinders	4 Cylinder/6 Cylinder	CAN data input value	Display engine equipped
Cam shaft specification	SOHC/DOHC	CAN data input value	Display engine equipped
Turbo	Turbo/Non-turbo	CAN data input value	Display engine equipped
AT Vehicle ID Signal	AT model/MT model	CAN data input value	Display transmission equipped
Blower fan information	ON/OFF	CAN data input value	Reception from A/C CM
Auto A/C failure	OK/NG	CAN data input value	Reception from A/C CM
Lighting I Switch Input	ON/OFF	Body integrated unit input value	Small light switch ON
Lighting II Switch Input	ON/OFF	Body integrated unit input value	Headlight switch ON
Lighting AUTO input	ON/OFF	Body integrated unit input value	Headlight AUTO switch ON
Dimmer Hi Switch Input	ON/OFF	Body integrated unit input value	Dimmer Hi switch ON
Dimmer Pass Switch Input	ON/OFF	Body integrated unit input value	Dimmer Pass switch ON
Illumination sensor flag	ON/OFF	Body integrated unit input value	Reception from A/C CM
Lighting I Lamp Output	ON/OFF	Relay drive	ON when small light is illuminated
Lighting II Lamp Output	ON/OFF	Relay drive	ON when headlight is illuminated

Items to be displayed	Unit of measure	Remarks	Note
Lighting Hi Lamp Output	ON/OFF	Relay drive	ON when headlight Hi is illuminated
Front Fog Lamp Output	ON/OFF	Relay drive	When front fog light relay ON output
DRL Cancel Output	ON/OFF	Relay drive	When DRL cancel relay ON output
Power Supply Tr	ON/OFF	Inner Tr drive	Headlight auxiliary power supply ON
Map lamp output	ON/OFF	Body integrated unit output value	ON when map light is illuminated
Luggage/Trunk lamp output	ON/OFF	Body integrated unit output value	ON when luggage/trunk light is illuminated
Off delay time	OFF — Long	Body integrated unit setting	Customized settings
Auto Light Sensitivity Adjustment	0 — 3	Body integrated unit setting	Customized settings
Rr Defogger op. mode	Continuous/Normal	Body integrated unit setting	Customized settings
Security Alarm Setup	ON/OFF	Body integrated unit setting	Customized settings
Impact Sensor Setup	ON/OFF	Body integrated unit setting	Customized settings
Alarm delay setup	ON/OFF	Body integrated unit setting	Customized settings
Lockout prevention	ON/OFF	Body integrated unit setting	Customized settings
Impact sensor	ON/OFF	Body integrated unit setting	Customized settings
Answer-back buzzer setup	ON/OFF	Body integrated unit setting	Customized settings
Hazard answer-back setup	ON/OFF	Body integrated unit setting	Customized settings
Ans.-back Buzzer	ON/OFF	Body integrated unit setting	Customized settings
Auto locking	ON/OFF	Body integrated unit setting	Customized settings
Passive Alarm	ON/OFF	Body integrated unit setting	Customized settings
Door open warning	ON/OFF	Body integrated unit setting value	Customized settings
Dome Light Alarm Setting	ON/OFF	Body integrated unit setting value	Customized settings
Belt Warning Switch	ON/OFF	Body integrated unit setting value	Customized settings
A/C ECM setting	ON/OFF	Body integrated unit setting value	Customized settings
Line Navigation Setting	ON/OFF	Body integrated unit setting value	Customized settings
wiperdeicer	ON/OFF	Body integrated unit setting value	Customized settings
Sedan/Wagon Setting	Sedan/wagon	Body integrated unit setting value	Customized settings
MT/AT Setting	MT/AT	Body integrated unit setting value	Customized settings
6MT Setting	6MT/Other than 6MT	Body integrated unit setting value	Customized settings
Destination Setting	0 — 16	Body integrated unit setting value	Displays body integrated unit customizing
Factory initial setting	Market/Factory	Body integrated unit setting value	Displays body integrated unit customizing
SCU applicable	Applicable/Not applicable	Body integrated unit setting value	(Canada only)

NOTE:
For detailed operation procedures, refer to “PC application help for Subaru Select Monitor”.

9. User Customizing

A: OPERATION

1) On «Main Menu» display, select {Each System Check}.
2) On «System Selection Menu» display, select {Integ. unit mode}.
3) On «Integ. unit mode failure diag.» display, select {Integ. Unit customizing}.
4) Change the setting with UP/DOWN key and set with the [OK] key.

List of User Customizing item

Data	Initial setting value	Customize setting	Remarks
Off delay time	Long		Delay time below can be selected by setting.
		OFF	0 seconds
		Short	10 seconds
		Normal	20 seconds
		Long	30 seconds
Auto Light Sensitivity Adjustment	Standard	1st	Slow response
		2nd	Standard
		3rd	Quick response
		4th	Fairly quick response
Rr Defogger op. mode	Normal	Normal	Automatically stops in 15 minutes after switch is turned to ON.
		Continuous	Repeats active condition for 15 minutes and inactive condition for 2 minutes until switch is turned to OFF.
Security Alarm Setup	OFF	ON	Security alarm (hazard, horn or siren) in active condition
		OFF	Security alarm in inactive condition
Impact Sensor Setup	OFF	ON	Workable when Impact Sensor Setup is set to “ON” Impact sensor function becomes activated.
		OFF	Impact sensor in inactive condition (Set to “OFF” in models without sensors.)
Alarm delay setup	ON		After the keyless lock operation, the alarm monitor starts after the following delay time has passed.
		ON	Delay time is 30 seconds.
		OFF	Delay time is 0 seconds.
Lockout prevention	ON	ON	Lockout prevention in active condition. (The function does not operate if safety knob is locked by hand.)
		OFF	Lockout prevention in inactive condition
Impact sensor (OP)	OFF	ON	Vehicle is controlled in impact sensor equipped mode. (Make sure to set to “OFF” for models without the impact sensor. When “ON”, hazard, horn or siren become activated by keyless lock (alarm monitor start).)
		OFF	Vehicle is controlled in no impact sensor mode.
Answer-back buzzer setup	ON	ON	When lock/unlock is selected by keyless entry system operation, buzzer operates.
		OFF	When lock/unlock is selected by keyless entry system operation, buzzer does not operate.
Hazard answer-back setup	ON	ON	When lock/unlock is selected by keyless entry system operation, hazard blinks.
		OFF	When lock/unlock is selected by keyless entry system operation, hazard does not interlock.
Initial keyless setting	—	—	
		Execution	
Initial button setting	—	—	
		Execution	

Data	Initial setting value	Customize setting	Remarks
Passive Alarm	ON	ON	
		OFF	
Door open warning	ON	ON	
		OFF	
Dome Light Alarm Setting	ON	ON	Room light illuminates interlocking with alarm.
		OFF	Room light does not illuminate interlocking with alarm.
Belt Warning Switch	ON	ON	Belt warning buzzer beeps.
		OFF	Belt warning buzzer stops.
Auto A/C ECU Setting	—	ON	Diagnoses with auto A/C ECM.
		OFF	Diagnoses without auto A/C ECM.
Line Navigation Setting	—	ON	Diagnoses with line navigation.
		OFF	Diagnoses without line navigation.
wiperdeicer	—	ON	Wiper deicer control is performed.
		OFF	Wiper deicer control is not performed.
Sedan/Wagon Setting	—	Sedan	Body control is performed by Sedan.
		Wagon	Body control is performed by Wagon.
MT/AT Setting	—	MT	Body control is performed by MT.
		AT	Body control is performed by AT.
6MT Setting	—	6MT	Body control is performed by 6MT.
		Other than 6MT	Body control is performed by other than 6MT.
Factory initial setting	Market	Market	Customize setting is reset when mode is switched from Market to Factory.
		Factory	

5) After setting, make sure that the setting changed in the {Current Data Display & Save} is same as vehicle equipment.

CAUTION:
- **The above settings must match the actual vehicle equipment.**
- **Do not change settings except for setting above while setting the functions.**
- **Be sure not to change Factory initial setting except when installing a new body integrated unit.**

NOTE:
For detailed operation procedures, refer to “PC application help for Subaru Select Monitor”.

10.Registration Body Integrated Unit

A: OPERATION

1. CONFIRMATION OF CURRENT SETTING

1) On «Main Menu» display, select {Others}.
2) On «Other Menu» display, select {Customized Setting}.
3) Save the setting.

Required items for new registration. (Except for system not equipped)

Contents	Item to confirm				Remarks
number of regist.	1	2	3	4	Number of registered ID
Off delay time	OFF	Long	Normal	Short	Setting for lighting off time
Auto Light Sensitivity Adjustment	1st	2nd (Standard)	3rd	4th	1st (slow) — 4th (fairly quick)
Rr Defogger op. mode	Normal		Continuous		
Security Alarm Setup	ON		OFF		
Impact Sensor Setup	ON		OFF		Option setting
Alarm delay setup	ON		OFF		
Lockout prevention	ON		OFF		
Impact sensor	ON		OFF		Option setting
Answer-back buzzer setup	ON		OFF		
Hazard answer-back setup	ON		OFF		
Passive Alarm	ON		OFF		
Door open warning	ON		OFF		
Dome Light Alarm Setting	ON		OFF		
Belt Warning Switch	ON		OFF		
A/C ECM setting	ON		OFF		
Line Navigation Setting	ON		OFF		Models with line navigation
wiperdeicer	ON		OFF		Option setting
Sedan/Wagon Setting	Wagon		Sedan		
MT/AT Setting	MT		AT		
6MT Setting	6MT		Other than 6MT		
Destination Setting	C0, C5		U4, U5, U6, C6		Setting only for Canada model
Factory initial setting	Factory		Market		Do not change to factory mode.

2. REGISTRATION BODY INTEGRATED UNIT (FUNCTION SETTING)

CAUTION:
For the body integrated unit, function selection is available to control the entire vehicle systems. It is possible to control the original functions of vehicle when registrations of body integrated unit and function setting are corresponded to vehicle equipment.
If registrations and function setting are different from vehicle equipment, vehicle system does not operate normally and diagnosis cannot be performed correctly. Pay attention to following item.
- **Make sure that the vehicle equipment matches with the registration or user customizing contents.**
- **Do not change the settings of vehicle improperly.**
- **Confirm that the key illumination does not blink when the ignition switch is ON, and that "Factory initial setting" of the body integrated unit registrations is set to "Market". If "Factory initial setting" is set to "Factory", key illumination blinks when ignition key is turned ON, to notify that the settings are unconfirmed.**
- **Key illumination does not blink with ignition switch turned to ON and go off with door closed.**
- **Be sure to register immobilizer if body integrated unit is replaced with a new part. (model with immobilizer)**
- **Make a registration of immobilizer when the parts related to immobilizer have been replaced. Refer to the "PC application help for Subaru Select Monitor".**

1) On «Main Menu» display, select {Each System Check}.
2) On «System Selection Menu» display, select {Integ. unit mode}.
3) Click the [OK] button after the control module name {Integ. Unit} is displayed.
4) On «Integ. unit mode failure diag.» display, select {Integ. Unit customizing}.

NOTE:
For the vehicle requiring the destination setting, if the destination setting is not finished, display can not be shifted into customizing screen. <Ref. to BC(diag)-21, DESTINATION SETTING, OPERATION, Registration Body Integrated Unit.>
5) Change the setting to the contents saved at confirmation of current setting.

CAUTION:
- **To perform normal operation of vehicle and diagnosis, the above settings must match the actual vehicle equipment.**
- **When the body integrated unit is new or in Factory mode, the key illumination blinks, and user customizing is incomplete. Check the user customizing settings.**
- **Be sure not to change Factory initial setting except when installing a new body integrated unit.**

NOTE:
"Factory" mode:
- Body integrated unit has not been set yet. It can be recognized by key illumination blinking with ignition switch turned to ON.
- All replacement body integrated units are set to "Factory" mode. When replacing a body integrated unit, be sure to perform the registration operation.

"Market" mode:
- Each settings have been set. It can be recognized by key ring illumination coming on in concocting with room light and going off with ignition switch turned to ON.

6) Perform the Factory initial setting. On the «Integ. Unit customizing» display screen of Subaru Select Monitor, select the {Factory initial setting}.
7) Change the mode from Factory to Market.
8) Turn the ignition switch to OFF and settle the contents of settings.
9) Change the Subaru Select Monitor system selection to «Immobilizer» to register the immobilizer key. (model with immobilizer)
10) Perform procedures according to the "PC application help for Subaru Select Monitor".
11) When key registration is completed, "Do you want to register remote engine start?" is displayed. Perform registration only for equipped models.
12) Perform the User Customizing. <Ref. to BC(diag)-17, OPERATION, User Customizing.>

NOTE:
For detailed operation procedures, refer to "PC application help for Subaru Select Monitor".

3. DESTINATION SETTING

NOTE:
For the vehicle requiring the destination setting, if the destination setting is not finished, display can not be shifted into customizing screen.

	Step	Check	Yes	No
1	**CONFIRM CURRENT SETTING.** Always perform confirmation of current setting before replacing the module. Record the contents of the "Destination Setting". NOTE: Refer to the "Read Current Data" and "CONFIRMATION OF CURRENT SETTING" to confirm the current setting. <Ref. to BC(diag)-19, CONFIRMATION OF CURRENT SETTING, OPERATION, Registration Body Integrated Unit.> <Ref. to BC(diag)-13, OPERATION, Read Current Data.>	Is the current setting recorded?	Go to step **2**.	Confirm the current setting. Go to step **1**.
2	**CONFIRM DESTINATION SETTING.** 1) Connect the Subaru Select Monitor, and run the application. 2) On «Main Menu» display, select {Each System Check}. 3) On the «System Selection Menu» display, select {Integ. unit mode}. 4) Select {Unit Customizing} from «Integ. unit mode». 5) The vehicle destination screen is displayed.	Is the vehicle destination setting screen displayed?	Go to step **3**.	Go to step **4**.
3	**CONFIRM DESTINATION SETTING.** Confirm the screen displayed on Subaru Select Monitor and the actual vehicle destination.	Do the screen and vehicle destination setting match?	Select [OK]. Go to step **8**.	Select [Cancel]. Go to step **4**.
4	**CONFIRM SCREEN.** "Select Parameter" is displayed on Subaru Select Monitor screen.	Is "Select Parameter" displayed on Subaru Select Monitor screen?	Go to step **5**.	Go to step **8**.
5	**ENTER DESTINATION CODE.** Enter the appropriate code in the screen. U4, U5, U6, C4, C6: U400 C0, C5: C000	Is the appropriate code entered?	Select [OK]. Go to step **6**.	Enter the destination code. Go to step **5**.
6	**CONFIRM SCREEN.** Check the screen displayed.	Is error screen displayed?	Enter the suitable code. Go to step **4**.	Go to step **7**.
7	**CONFIRM SCREEN.** Check the screen displayed.	Is there the entered destination among the destinations displayed in the screen?	Select [OK]. Go to step **8**.	Select [Cancel]. Error screen is displayed, select [OK]. Go to step **4**.
8	**REGISTER VEHICLE EQUIPMENTS.** Customizing screen is displayed. NOTE: Match the each item setting of body integrated unit registration item list with the vehicle equipments.	Do all setting contents match with the vehicle equipment specification?	Go to step **9**.	Change the items until each content setting match with the vehicle equipments specification. Go to step **8**.

	Step	Check	Yes	No
9	**CONFIRM MARKET MODE.** 1) Customizing screen, select the {Factory initial setting} to change the setting from “Factory” mode to “Market” mode. 2) Turn the ignition switch to OFF. NOTE: When the setting is changed from “Factory” mode to “Market” mode, turning the ignition switch from ON → OFF confirms the setting. 3) Turn the ignition switch to ON, and check the contents of settings.	Is the mode changed to “Market” mode?	Go to step **10**.	Perform the destination setting from the first step. Go to step **1**.
10	**CONFIRM MARKET MODE.** Check that the engine starts.	Does the engine start?	Registration of body integrated unit is finished.	It is possible that harness malfunction may occur. Perform the diagnosis.

11.Function Check

A: OPERATION

NOTE:
In order to check the body integrated unit function, inspect the body integrated unit and actuator using Subaru Select Monitor without operating switches.
1) On «Main Menu» display, select {Each System Check}.
2) On «System Selection Menu» display, select {Integ. unit mode}.
3) On «Integ. unit mode failure diag.» display, select {Function check}.
4) Select an item to be operated on «Function check» display, and press the [OK] button.
5) Pressing [Next] starts, [End] cancels the operation and [OK] returns to the System Operation Check Mode display screen.

NOTE:
- If not equipped (based on area or condition), process will not go on.
- For detailed operation procedures, refer to “PC application help for Subaru Select Monitor”.

12.List of Diagnostic Trouble Code (DTC)

A: LIST

DTC	Contents	Content of diagnosis	Note
None	Communication for Initializing Impossible	Subaru Select Monitor communication is open or shorted.	<Ref. to LAN(diag)-47, COMMUNICATION FOR INITIALIZING IMPOSSIBLE, Diagnostic Procedure with Diagnostic Trouble Code (DTC).>
B1100	Integ. Unit System Error	Body integrated unit internal error	<Ref. to BC(diag)-25, DTC B1100 INTEG. UNIT SYSTEM ERROR, Diagnostic Procedure with Diagnostic Trouble Code (DTC).>
B1101	BATT p/supply malfunction cont.	Open or short in battery power supply control circuit	<Ref. to BC(diag)-26, DTC B1101 BATT P/SUPPLY MALFUNCTION CONT, Diagnostic Procedure with Diagnostic Trouble Code (DTC).>
B1102	BATT p/supply malfunction backup	Battery power supply backup circuit is open or shorted.	<Ref. to BC(diag)-28, DTC B1102 BATT P/SUPPLY MALFUNCTION BACKUP, Diagnostic Procedure with Diagnostic Trouble Code (DTC).>
B1103	Ignition power failure	IGN power supply circuit is open or shorted.	<Ref. to BC(diag)-30, DTC B1103 IGNITION POWER FAILURE, Diagnostic Procedure with Diagnostic Trouble Code (DTC).>
B1104	ACC power failure	ACC power supply circuit is open or shorted.	<Ref. to BC(diag)-32, DTC B1104 ACC POWER FAILURE, Diagnostic Procedure with Diagnostic Trouble Code (DTC).>
B1106	shift lock circuit Failure	Ground short of shift lock circuit	<Ref. to BC(diag)-34, DTC B1106 SHIFT LOCK CIRCUIT FAILURE, Diagnostic Procedure with Diagnostic Trouble Code (DTC).>
B1401	M Collation NG	Malfunction related immobilizer	<Ref. to BC(diag)-36, DTC B1401 M COLLATION NG, Diagnostic Procedure with Diagnostic Trouble Code (DTC).>
B1402	Immobilizer Key Collation NG	Malfunction related immobilizer	<Ref. to BC(diag)-36, DTC B1402 IMMOBILIZER KEY COLLATION NG, Diagnostic Procedure with Diagnostic Trouble Code (DTC).>
B1403	E/G request NG	Malfunction related immobilizer	<Ref. to BC(diag)-36, DTC B1403 E/G REQUEST NG, Diagnostic Procedure with Diagnostic Trouble Code (DTC).>
B1405	SCU Collation NG	Malfunction related immobilizer	<Ref. to BC(diag)-36, DTC B1405 SCU COLLATION NG, Diagnostic Procedure with Diagnostic Trouble Code (DTC).>
B1406	SCU_EEPROM_NG	Malfunction related immobilizer	<Ref. to BC(diag)-36, DTC B1406 SCU_EEPROM_NG, Diagnostic Procedure with Diagnostic Trouble Code (DTC).>
B1500	Keyless UART com. Malfunction	Open or short circuit in keyless UART circuit	<Ref. to BC(diag)-37, DTC B1500 KEYLESS UART COM. MALFUNCTION, Diagnostic Procedure with Diagnostic Trouble Code (DTC).>

13.Diagnostic Procedure with Diagnostic Trouble Code (DTC)

A: DTC B1100 INTEG. UNIT SYSTEM ERROR

DTC DETECTING CONDITION:
System error in body integrated unit
TROUBLE SYMPTOM:
LAN communication immobilizer function may not be executed normally.

Step		Check	Yes	No
1	**CHECK DTC.** Check DTC indicated by body integrated unit.	Is B1100 a current malfunction?	Go to step **2**.	Temporary EEPROM access error occurred.
2	**CHECK CONNECTOR.** 1) Turn the ignition switch to OFF. 2) Disconnect the body integrated unit connector. 3) Connect the disconnected connectors. 4) Read the DTC of body integrated unit using Subaru Select Monitor.	Is B1100 a current malfunction?	Replace the body integrated unit. <Ref. to SL-72, REMOVAL, Body Integrated Unit.>	Temporary EEPROM access error occurred.

B: DTC B1101 BATT P/SUPPLY MALFUNCTION CONT

DTC DETECTING CONDITION:

- Voltage malfunction caused by poor contact of battery power supply control circuit
- Battery voltage of body integrated unit is not within the 8.5 — 16.5 V range.

TROUBLE SYMPTOM:

Functions of body integrated unit stop.

NOTE:

When B1102 BATT p/supply (backup) malfunction is output at the same time, all the function of body integrated unit may not operate.

WIRING DIAGRAM:

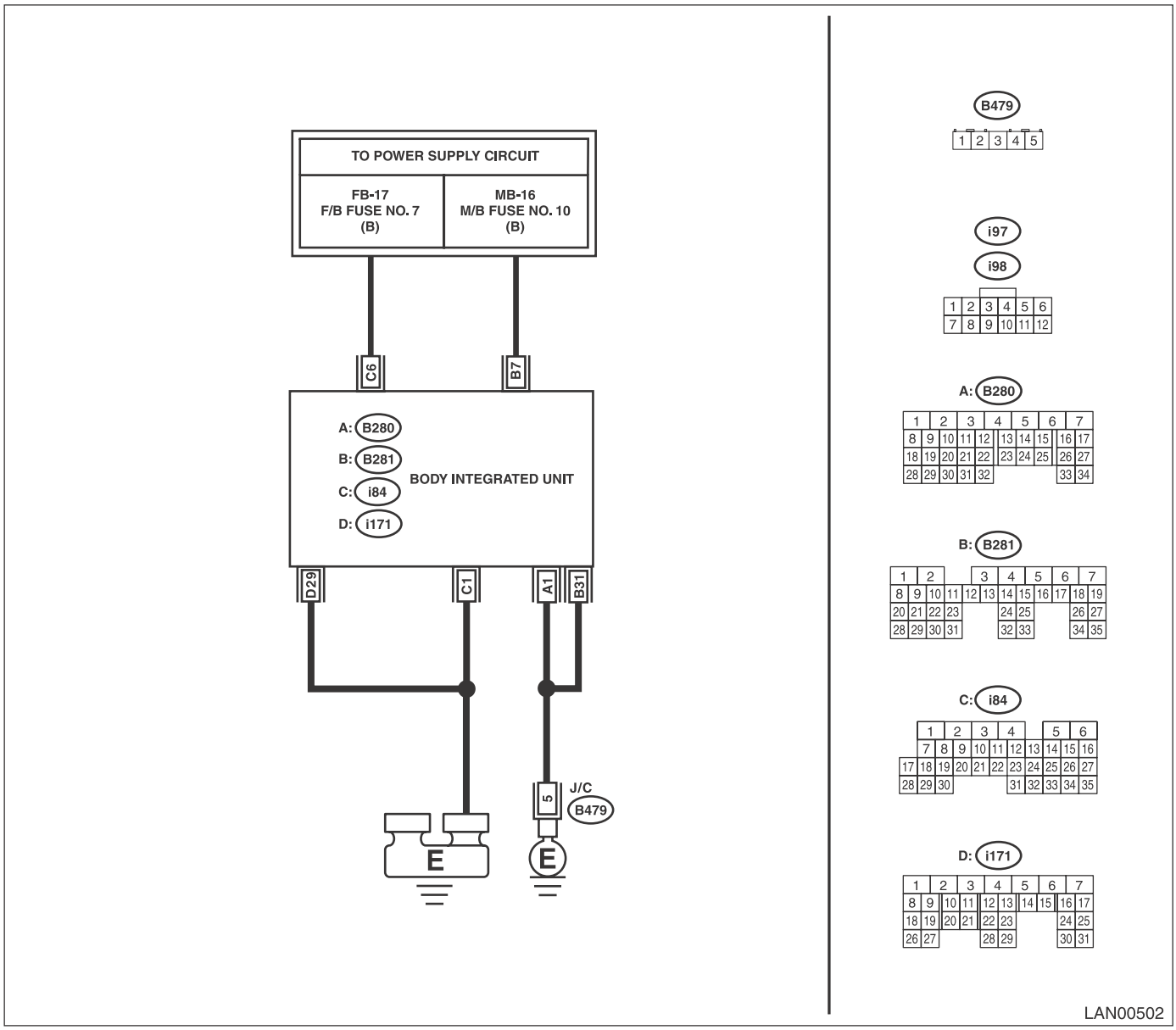

Step		Check	Yes	No
1	**CHECK DTC.** Read the DTC of body integrated unit using Subaru Select Monitor.	Is B1101 a current malfunction?	Go to step **2**.	Go to step **5**.

	Step	Check	Yes	No
2	**CHECK DTC.** 1) Turn the ignition switch to OFF. 2) Disconnect and then connect the body integrated unit connector. 3) Wait approx. 2 minutes. 4) Turn the ignition switch to ON. 5) Read the DTC of body integrated unit using Subaru Select Monitor.	Is B1101 a current malfunction?	Go to step **3**.	Go to step **5**.
3	**CHECK FUSE.** 1) Turn the ignition switch to OFF. 2) Inspect the fuse.	Is the fuse OK?	Go to step **4**.	Replace the defective fuse.
4	**CHECK HARNESS.** 1) Disconnect the body integrated unit connector. 2) Using the tester, measure the voltage between terminals. ***Connector & terminal*** ***(i84) No. 6 (+) — Chassis ground (–):***	Is the voltage 8.5 — 16.5 V?	Replace the body integrated unit. <Ref. to SL-72, REMOVAL, Body Integrated Unit.>	Repair the harness between body integrated unit and fuse.
5	**CHECK CONNECTOR.** 1) Turn the ignition switch to OFF. 2) Disconnect the body integrated unit connector.	Is there poor contact of connector?	Repair or replace the poor contact of connector.	A temporary change of voltage occurred.

C: DTC B1102 BATT P/SUPPLY MALFUNCTION BACKUP

DTC DETECTING CONDITION:
Voltage malfunction caused by poor contact of battery power supply backup circuit
TROUBLE SYMPTOM:
Illuminations for keyless entry, map light, luggage light, trunk light, room light, ignition switch do no illuminate.

NOTE:
When B1101 BATT p/supply (cont.) malfunction are output at the same time, all function of body integrated unit may not operate.
WIRING DIAGRAM:

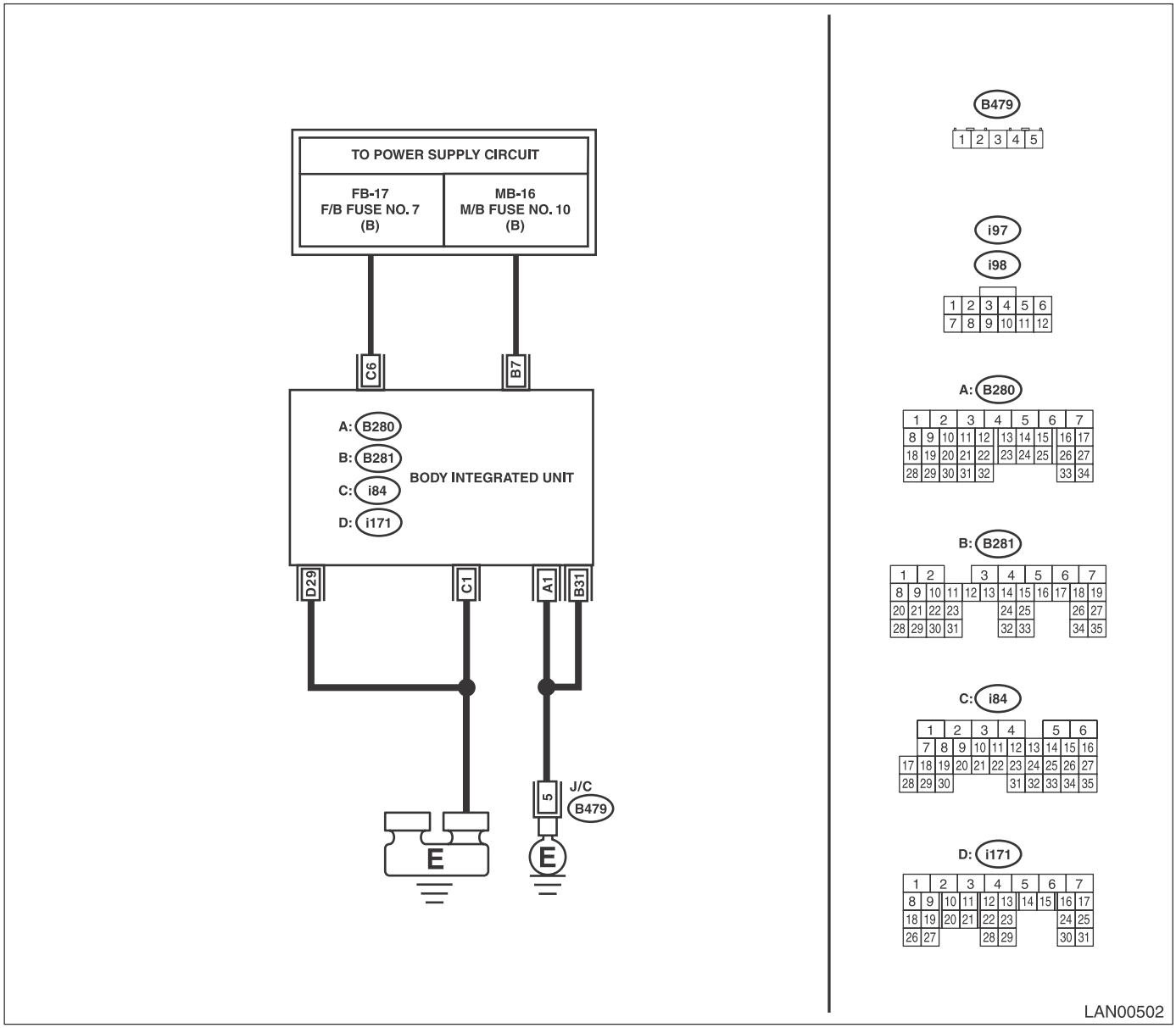

Step		Check	Yes	No
1	**CHECK DTC.** Read the DTC of body integrated unit using Subaru Select Monitor.	Is B1102 a current malfunction?	Go to step **2.**	Go to step **5.**

	Step	Check	Yes	No
2	**CHECK DTC.** 1) Turn the ignition switch to OFF. 2) Disconnect and then connect the body integrated unit connector. 3) Wait approx. 2 minutes. 4) Turn the ignition switch to ON. 5) Read the DTC of body integrated unit using Subaru Select Monitor.	Is B1102 a current malfunction?	Go to step **3**.	Go to step **5**.
3	**CHECK FUSE.** 1) Turn the ignition switch to OFF. 2) Inspect the fuse.	Is the fuse OK?	Go to step **4**.	Replace the defective fuse.
4	**CHECK HARNESS.** 1) Disconnect the body integrated unit connector. 2) Using the tester, measure the voltage between terminals. ***Connector & terminal*** ***(B281) No. 7 (+) — Chassis ground (–):***	Is the voltage 8.5 — 16.5 V?	Replace the body integrated unit. <Ref. to SL-72, REMOVAL, Body Integrated Unit.>	Repair the harness between body integrated unit and fuse.
5	**CHECK CONNECTOR.** 1) Turn the ignition switch to OFF. 2) Disconnect the body integrated unit connector.	Is there poor contact of connector?	Repair or replace the poor contact of connector.	A temporary change of voltage occurred.

D: DTC B1103 IGNITION POWER FAILURE

DTC DETECTING CONDITION:
Voltage malfunction caused by poor contact of IGN power supply circuit
TROUBLE SYMPTOM:
Symptoms such as shift lock, reverse lock or wiper not operating may occur.
WIRING DIAGRAM:

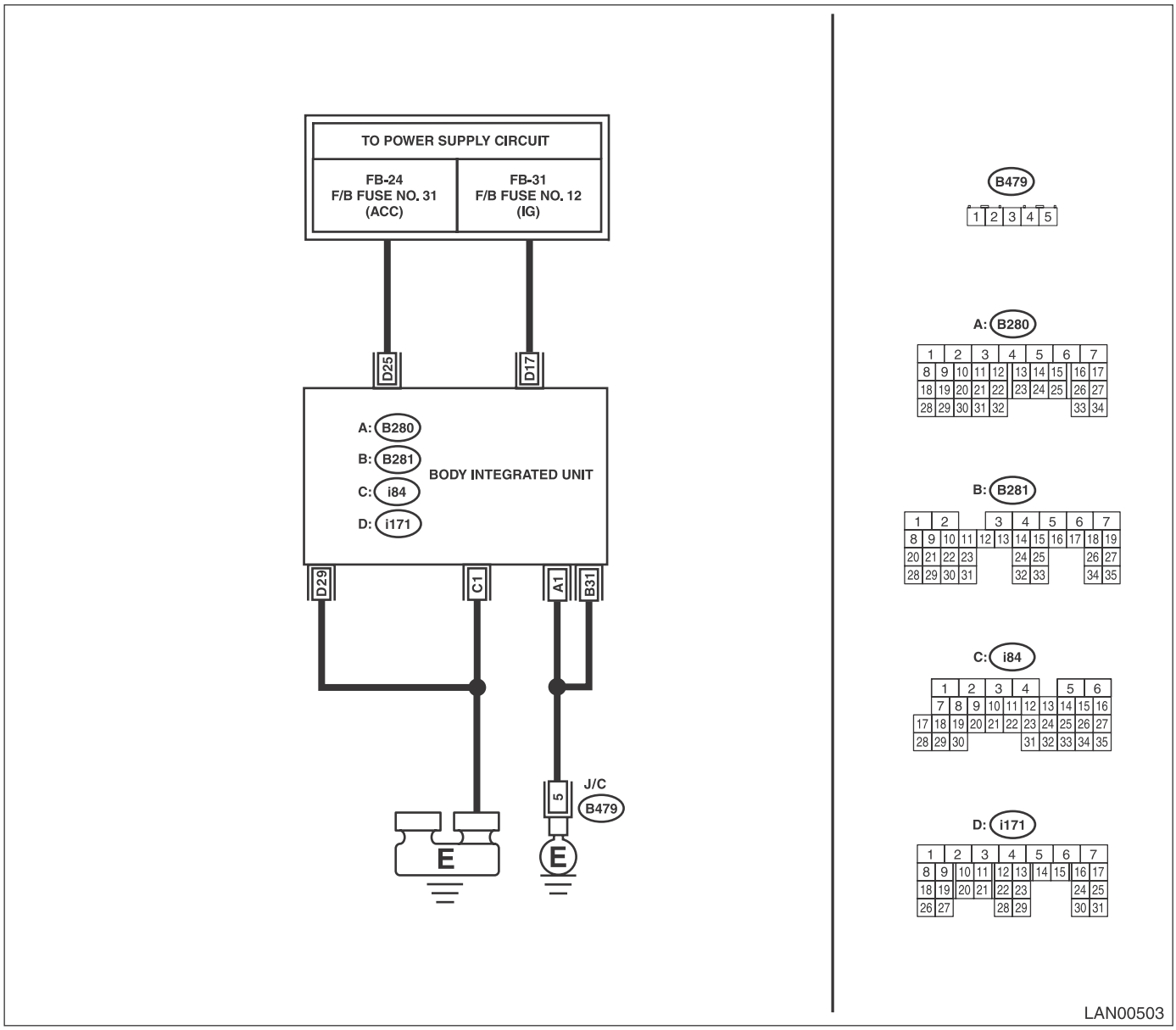

Step		Check	Yes	No
1	**CHECK DTC.** Read the DTC of body integrated unit using Subaru Select Monitor.	Is B1103 a current malfunction?	Go to step **2**.	Go to step **5**.
2	**CHECK DTC.** 1) Turn the ignition switch to OFF. 2) Disconnect and then connect the body integrated unit connector. 3) Wait approx. 2 minutes. 4) Turn the ignition switch to ON. 5) Read the DTC of body integrated unit using Subaru Select Monitor.	Is B1103 a current malfunction?	Go to step **3**.	Go to step **5**.

	Step	Check	Yes	No
3	**CHECK FUSE.** 1) Turn the ignition switch to OFF. 2) Inspect the fuse.	Is the fuse OK?	Go to step **4**.	Replace the defective fuse.
4	**CHECK HARNESS.** 1) Disconnect the body integrated unit connector. 2) Using the tester, measure the voltage between terminals. ***Connector & terminal*** ***(i171) No. 17 (+) — Chassis ground (–):***	Is the voltage 8.5 — 16.5 V?	Replace the body integrated unit. <Ref. to SL-72, REMOVAL, Body Integrated Unit.>	Repair the harness between body integrated unit and fuse.
5	**CHECK CONNECTOR.** 1) Turn the ignition switch to OFF. 2) Disconnect the body integrated unit connector.	Is there poor contact of connector?	Repair or replace the poor contact of connector.	A temporary change of voltage occurred.

E: DTC B1104 ACC POWER FAILURE

DTC DETECTING CONDITION:
Voltage malfunction caused by poor contact of ACC power supply circuit
TROUBLE SYMPTOM:
DRL may not illuminate.
WIRING DIAGRAM:

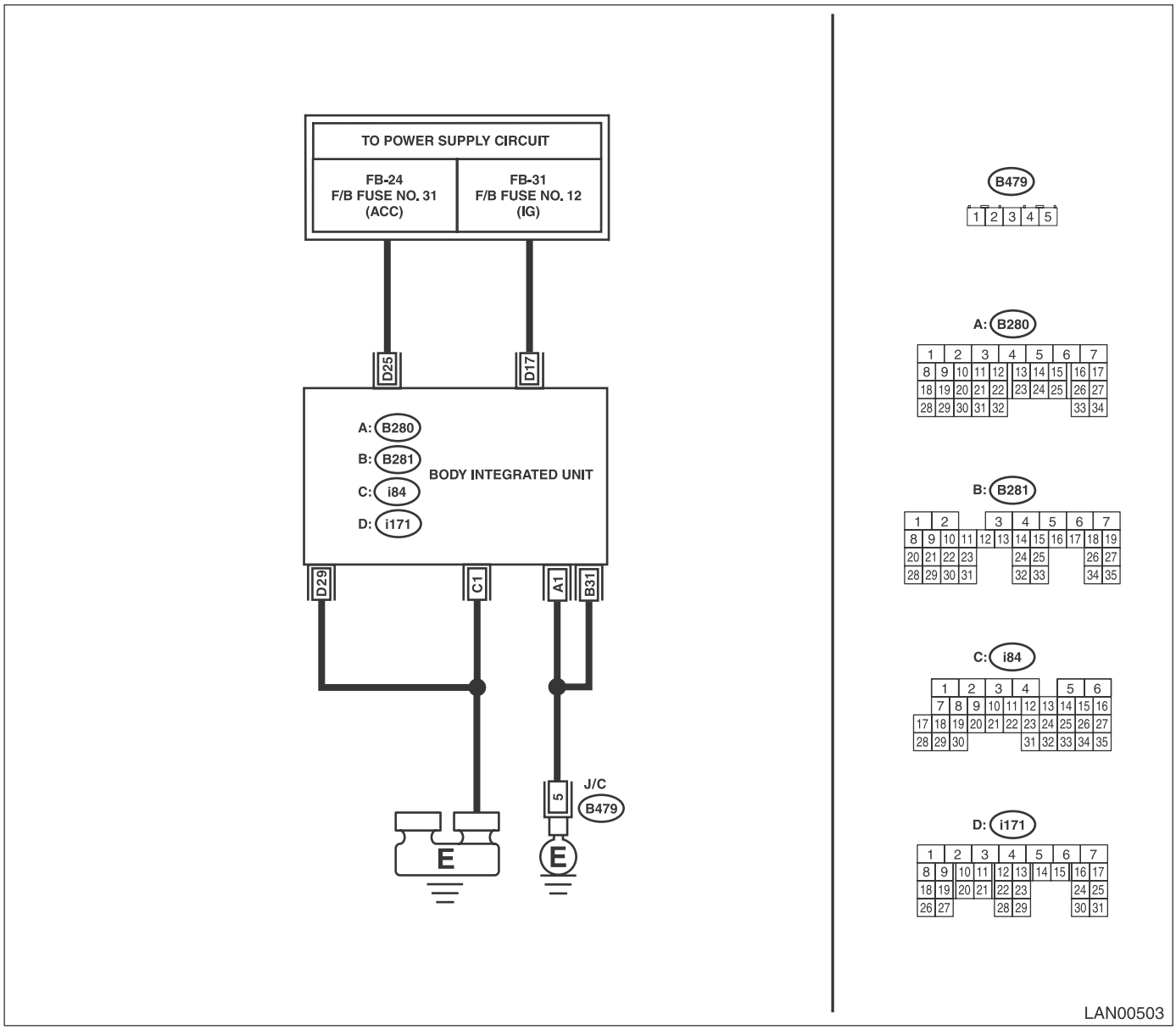

Step		Check	Yes	No
1	**CHECK DTC.** Read the DTC of body integrated unit using Subaru Select Monitor.	Is B1104 a current malfunction?	Go to step **2**.	Go to step **5**.
2	**CHECK DTC.** 1) Turn the ignition switch to OFF. 2) Disconnect and then connect the body integrated unit connector. 3) Wait approx. 2 minutes. 4) Turn the ignition switch to ON. 5) Read the DTC of body integrated unit using Subaru Select Monitor.	Is B1104 a current malfunction?	Go to step **3**.	Go to step **5**.

	Step	Check	Yes	No
3	**CHECK FUSE.** 1) Turn the ignition switch to OFF. 2) Inspect the fuse.	Is the fuse OK?	Go to step **4**.	Replace the defective fuse.
4	**CHECK HARNESS.** 1) Disconnect the body integrated unit connector. 2) Using the tester, measure the voltage between terminals. ***Connector & terminal*** ***(i171) No. 25 (+) — Chassis ground (–):***	Is the voltage 8.5 — 16.5 V?	Replace the body integrated unit. <Ref. to SL-72, REMOVAL, Body Integrated Unit.>	Repair the harness between body integrated unit and fuse.
5	**CHECK CONNECTOR.** 1) Turn the ignition switch to OFF. 2) Disconnect the body integrated unit connector.	Is there poor contact of connector?	Repair or replace the poor contact of connector.	A temporary change of voltage occurred.

F: DTC B1106 SHIFT LOCK CIRCUIT FAILURE

DTC DETECTING CONDITION:

Open or power supply-output short, GND-output short in shift lock circuit.

TROUBLE SYMPTOM:

Shift lock does not be released or remain locked.

WIRING DIAGRAM:

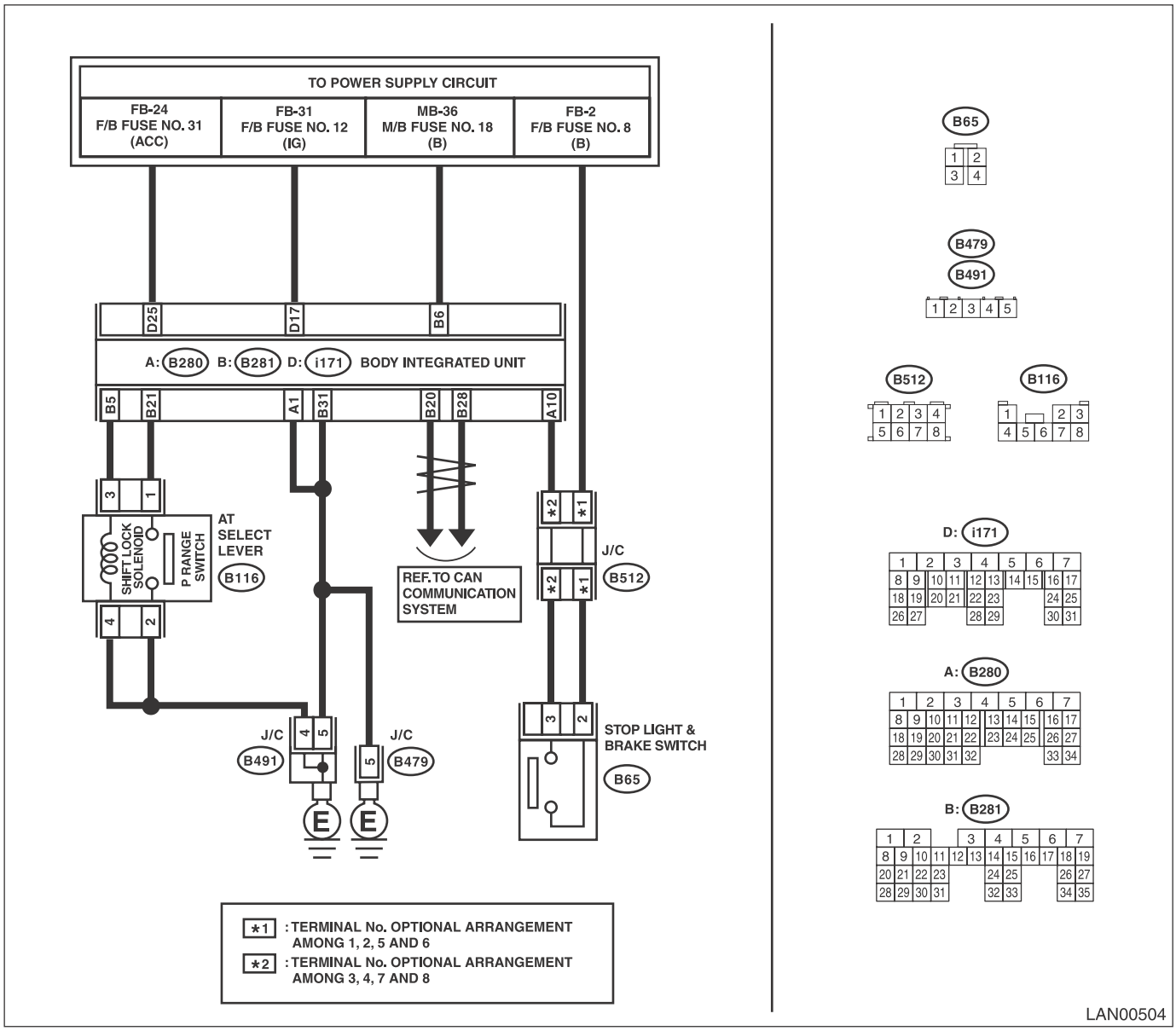

Step		Check	Yes	No
1	**CHECK DTC.** 1) Turn the ignition switch to ON. 2) Keep the Parking range for approx. 5 seconds. 3) Read the DTC of body integrated unit using Subaru Select Monitor.	Is B1106 a current malfunction?	Go to step **6**.	Go to step **2**.

	Step	Check	Yes	No
2	**CHECK DTC.** 1) Turn the ignition switch to OFF. 2) Disconnect the shift lock solenoid connector. 3) Connect the disconnected connectors. 4) Turn the ignition switch to ON, then keep the Parking range for approx. 5 seconds. 5) Read the DTC of body integrated unit using Subaru Select Monitor.	Is B1106 a current malfunction?	Go to step **3**.	Go to step **7**.
3	**CHECK HARNESS.** 1) Turn the ignition switch to OFF. 2) Disconnect the shift lock solenoid connector. 3) Using the tester, measure the resistance between terminals. ***Connector & terminal*** ***(B116) No. 4 — Chassis ground:***	Is the resistance less than 10 Ω?	Go to step **4**.	Repair or replace the open circuit of harness.
4	**CHECK SHIFT LOCK SOLENOID.** Using a tester, measure the resistance between shift lock solenoid terminals. ***Connector & terminal*** ***(B116) No. 4 — No. 3:***	Is the resistance less than 27 — 31 Ω?	Go to step **5**.	Replace the shift lock solenoid. <Ref. to CS-30, DISASSEMBLY, Select Lever.>
5	**CHECK SHIFT LOCK SOLENOID.** Connect the battery terminal to shift lock solenoid. ***Connector & terminal*** ***(B116) No. 3 — positive terminal:*** ***(B116) No. 4 — ground terminal:***	Does the shift lock solenoid operate and then release the lock?	Go to step **6**.	Replace the shift lock solenoid. <Ref. to CS-30, DISASSEMBLY, Select Lever.>
6	**CHECK HARNESS.** Use a tester to measure the resistance between harness terminals. ***Connector & terminal*** ***(B116) No. 3 — (B281) No. 5:*** NOTE: If body integrated unit and shift lock connector are not disconnected, disconnect them first and then perform measurement.	Is the resistance less than 10 Ω?	Replace the body integrated unit. <Ref. to SL-72, Body Integrated Unit.>	Repair or replace the open circuit of harness.
7	**CHECK DTC.** 1) Depress the brake pedal at the parking range. 2) Read the DTC of body integrated unit using Subaru Select Monitor.	Is B1106 a current malfunction?	Go to step **8**.	Go to step **9**.
8	**CHECK DTC.** 1) Turn the ignition switch to OFF. 2) Disconnect the body integrated unit connector and shift lock connector. 3) Connect the disconnected connectors. 4) Turn the ignition switch to ON. 5) Depress the brake pedal at the parking range. 6) Read the DTC of body integrated unit using Subaru Select Monitor.	Is B1106 a current malfunction?	Go to step **4**.	Go to step **9**.
9	**CHECK CONNECTOR.** 1) Turn the ignition switch to OFF. 2) Disconnect the body integrated unit connector and shift lock connector.	Is there poor contact of connector terminal?	Repair or replace the poor contact of terminal.	It is possible that temporary poor contact occurs.

G: DTC B1401 M COLLATION NG

For detailed diagnosis procedure, refer to IMMOBILIZER (DIAGNOSTICS). <Ref. to IM(diag)-25, DTC B1401 M COLLATION NG, Diagnostic Procedure with Diagnostic Trouble Code (DTC).>

H: DTC B1402 IMMOBILIZER KEY COLLATION NG

For detailed diagnosis procedure, refer to IMMOBILIZER (DIAGNOSTICS). <Ref. to IM(diag)-25, DTC B1402 IMMOBILIZER KEY COLLATION NG, Diagnostic Procedure with Diagnostic Trouble Code (DTC).>

I: DTC B1403 E/G REQUEST NG

For detailed diagnosis procedure, refer to IMMOBILIZER (DIAGNOSTICS). <Ref. to IM(diag)-25, DTC B1403 E/G REQUEST NG, Diagnostic Procedure with Diagnostic Trouble Code (DTC).>

J: DTC B1405 SCU COLLATION NG

For detailed diagnosis procedure, refer to IMMOBILIZER (DIAGNOSTICS). <Ref. to IM(diag)-25, DTC B1405 SCU COLLATION NG, Diagnostic Procedure with Diagnostic Trouble Code (DTC).>

K: DTC B1406 SCU_EEPROM_NG

For detailed diagnosis procedure, refer to IMMOBILIZER (DIAGNOSTICS). <Ref. to IM(diag)-26, DTC B1406 SCU_EEPROM_NG, Diagnostic Procedure with Diagnostic Trouble Code (DTC).>

L: DTC B1500 KEYLESS UART COM. MALFUNCTION

DTC DETECTING CONDITION:

UART between keyless control module and body integrated unit is open, shorted or communication failure.

TROUBLE SYMPTOM:

Door lock does not operate with keyless.

WIRING DIAGRAM:

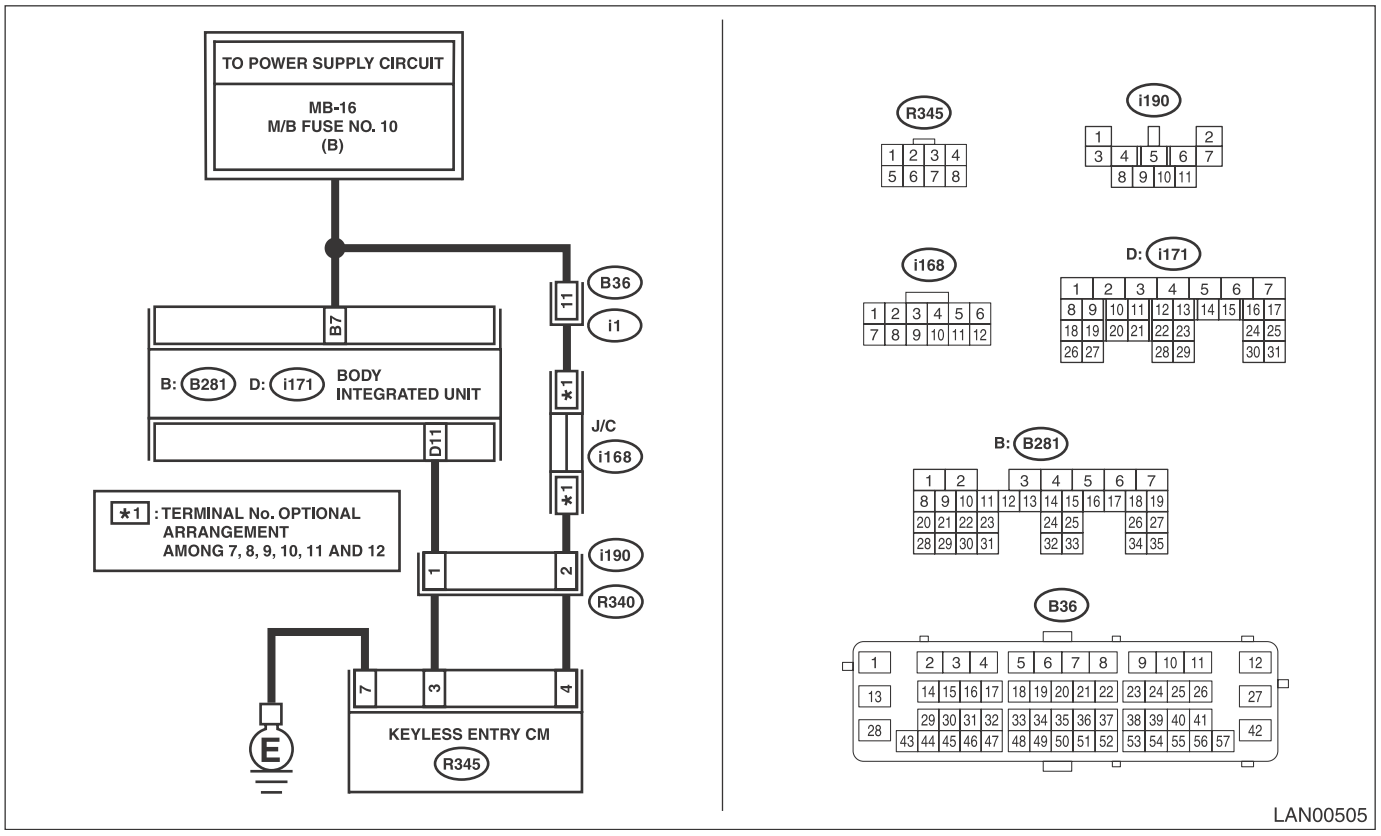

Step		Check	Yes	No
1	**CHECK DTC.** 1) Insert the ignition key to the ignition key cylinder and remove. 2) Read the DTC of body integrated unit using Subaru Select Monitor.	Is U1500 a current malfunction?	Go to step **2**.	Go to step **7**.
2	**CHECK DTC.** 1) Turn the ignition switch to OFF. 2) Disconnect the body integrated unit and keyless entry control module connector. 3) Connect the disconnected connectors. 4) Insert the ignition key to the ignition key cylinder and remove. 5) Read the DTC of body integrated unit using Subaru Select Monitor.	Is U1500 a current malfunction?	Go to step **3**.	Go to step **7**.
3	**CHECK HARNESS.** 1) Turn the ignition switch to OFF. 2) Disconnect the body integrated unit and keyless entry control module connector. 3) Using the tester, measure the resistance between terminals. ***Connector & terminal*** ***(i171) No. 11 — (R345) No. 3:***	Is the resistance 10 Ω or less?	Go to step **4**.	Repair the open circuit of harness or replace harness.

	Step	Check	Yes	No
4	**CHECK HARNESS.** 1) Turn the ignition switch to OFF. 2) Using the tester, measure the voltage between terminals. ***Connector & terminal*** ***(R345) No. 4 (+) — Chassis ground (–):***	Is the voltage 10 V or more?	Go to step **5**.	Repair the power supply circuit.
5	**CHECK HARNESS.** Using the tester, measure the resistance between terminals. ***Connector & terminal*** ***(R345) No. 7 — Chassis ground:***	Is the resistance 10 Ω or less?	Go to step **6**.	Repair the ground circuit.
6	**CHECK CONTROL MODULE.** 1) Turn the ignition switch to OFF. 2) Remove the keyless entry control module. 3) Install a keyless entry control module that was operating normally on another vehicle.	Does it operate with the remote control key of another vehicle?	Replace the keyless entry control module. <Ref. to SL-69, REMOVAL, Keyless Entry Control Module.>	Replace the body integrated unit.
7	**CHECK CONNECTOR.** Check for poor contact of connectors used for low-speed CAN.	Is there poor contact of connector?	Repair the connector that has poor contact, or replace harness.	It may be a temporary communication malfunction. Delete the DTC.

14.General Diagnostic Table

A: INSPECTION

Using the Subaru Select Monitor, read DTC, or check the following data on the current data display to make judgements.

Contents	Operation	Specifications		Note
		YES	NO	
Diagnostic code	DTC is not displayed when inspecting all DTCs.	DTC is not displayed.	Perform the diagnosis according to DTC.	—
Remaining fuel level	Fuel gauge displays correctly	System is normal.	Check the combination meter system and LAN system.	When “Fuel level resistance” and “Fuel level resistance 2” are different values on current data of the body integrated unit, the body integrated unit may have inner malfunction.
	Remaining fuel level warning light is not illuminating.	System is normal.		
Clearance light (Low beam) (High beam)	Clearance light and low/high beams illuminate normally when the switch is operated. Indicator in the meter illuminates at the same time.	System is normal.	Check the lighting system, combination meter system and LAN system.	
Fog light	Front fog light illuminates when the switch is operated. Indicator in the meter illuminates at the same time.	System is normal.	Check the lighting system, combination meter system and LAN system.	
Rear defogger	Rear defogger operates when the switch is operated. The indicator illuminates at the same time.	System is normal.	Check the rear window defogger system and A/C system.	
Wiper deicer	Wiper deicer operates when the switch is operated. The indicator illuminates at the same time. When the ambient temperature is 5°C (41°F) or higher, press the switch 3 seconds or more to forcibly activate the system.	System is normal.	Check the wiper deicer system and A/C system.	Wiper deicer operates when “Wiper deicer setting” of the body integrated unit is set to on.
Rear wiper	Rear wiper operates when the switch is operated.	System is normal.	Check wiper or washer system.	Depending on user customizing “Sedan/Wagon setting” of the body integrated unit, vehicle sensory time varies.
Key interlock	Key cannot be removed in other than P range.	System is normal.	Check the body control system.	
Shift Lock	Shift operation is normal.	System is normal.	Check the body control system.	
Key warning switch alarm	When the driver’s door is open without the key removed, the buzzer sounds.	System is normal.	Check the combination meter and body control system.	
Reverse warning	When the lever is shifted to reverse, the buzzer sounds.	System is normal.	Check the combination meter and body control system.	

Contents	Operation	Specifications		Note
		YES	NO	
Seat belt warning alarm	With driver's seat belt unfastened, the indicator on the meter illuminates. When the vehicle speed exceeds 20 km/h with the condition, the buzzer sounds.	System is normal.	Check the seat belt system and combination meter LAN system.	
Door lock	The doors lock/unlock when the door switch is operated. Rear gate/trunk opens when the rear gate/trunk release switch is operated.	System is normal.	Check the security & lock and body control system.	If user customizing "Sedan/Wagon setting" is different, trunk and rear gate do not open.
Keyless entry	The lock locks/unlocks when the keyless transmitter is operated. Trunk/rear gate unlocks when trunk/rear gate unlock button is operated.	System is normal.	Check the keyless entry and body control system.	
Answer back	Answer-back operates when the keyless entry locks/unlocks.	System is normal.	Check the security & lock system, and LAN system.	
Room light	The light illuminates/goes off according to the door open/close.	System is normal.	Check the room light system, security & lock system, and LAN system.	
Map light	The light illuminates/goes off according to the door open/close. (Except for rear gate)	System is normal.	Check the spot map light, security & lock system, and LAN system.	
Luggage/trunk light	The light illuminates/goes off according to the rear gate open/close.	System is normal.	Check the luggage/trunk light, security & lock system, and LAN system.	
Key illumination	The light illuminates/goes off according to the driver's door open/close.	System is normal.	Check the ignition switch illumination, security & lock, and LAN system.	
Illumination control	Illumination volume control is available.	System is normal.	Check the illumination control switch, combination meter, and body control system.	Illumination volume control is not available when user customizing "Illumination Control On/Off" of the body integrated unit is set to off.
Engine start	Engine starts.	System is normal.	Check the engine system, immobilizer, and LAN system.	
Vehicle security	Security monitoring/security canceling can be performed by operating the keyless entry.	System is normal.	Check the security & lock system, and LAN system.	Security monitoring starts and at the same time the warning buzzer sounds, when impact sensor is not connected and user customizing "Impact Sensor" of the body integrated unit is set to on.

WIRING SYSTEM SECTION

This service manual has been prepared to provide SUBARU service personnel with the necessary information and data for the correct maintenance and repair of SUBARU vehicles.
This manual includes the procedures for maintenance, disassembling, reassembling, inspection and adjustment of components and diagnostics for guidance of experienced mechanics.
Please peruse and utilize this manual fully to ensure complete repair work for satisfying our customers by keeping their vehicle in optimum condition. When replacement of parts during repair work is needed, be sure to use SUBARU genuine parts.

All information, illustration and specifications contained in this manual are based on the latest product information available at the time of publication approval.

FUJI HEAVY INDUSTRIES LTD. G2460BE8

WIRING SYSTEM

WI

		Page
1.	Basic Diagnostic Procedure	3
2.	Working Precautions	14
3.	Power Supply Circuit	15
4.	Ground Circuit	24
5.	Airbag System	37
6.	Air Conditioning System	41
7.	AT Control System	50
8.	AT Shift Lock Control System	57
9.	Audio System	58
10.	Back-up Light System	66
11.	CAN Communication System	69
12.	Charging System	72
13.	Clearance Light and Illumination Light System	73
14.	Clock System	80
15.	Combination Meter System	81
16.	Coolant Temperature System	86
17.	Cruise Control System	88
18.	CVT Control System	94
19.	Engine Electrical System	102
20.	Front Accessory Power Supply Socket System	148
21.	Front Fog Light System	149
22.	Front Wiper and Washer System	151
23.	Fuel Gauge System	153
24.	Headlight System	154
25.	Horn System	157
26.	Immobilizer System	158
27.	Interior Light System	159
28.	Keyless Entry System	163
29.	Navigation System	167
30.	Occupant Detection System	172
31.	Oil Pressure Warning Light System	173
32.	Parking Brake / Brake Fluid Level Warning Light System	174
33.	Power Seat System	178
34.	Power Window System	180
35.	Radiator Fan System	188
36.	Rear Accessory Power Supply Socket System	191
37.	Rear Defogger System	192
38.	Rearview Camera System	193
39.	Rearview Mirror System	195
40.	Rear Wiper and Washer System	196
41.	Remote Control Mirror System	198
42.	Remote Engine Start System	200
43.	Seat Belt Warning System	203
44.	Seat Heater System	207
45.	Security System	209

46. Speedometer System 212
47. Starter System 213
48. Stop Light System 216
49. Sunroof Control System 219
50. Tire Pressure Monitoring System 220
51. Turn Signal Light and Hazard Light System 221
52. Vehicle Dynamics Control System 223
53. Wiper Deicer System 226
54. Harness Components Location 227
55. Front Wiring Harness 229
56. Bulkhead Wiring Harness (In Engine Compartment) 230
57. Bulkhead Wiring Harness (In Compartment) 236
58. Engine Wiring Harness and Transmission Cord 243
59. Instrument Panel Wiring Harness 249
60. Rear Wiring Harness 252
61. Door Cord 258
62. Rear Wiring Harness and Trunk Lid Cord 260
63. Rear Wiring Harness and Rear Gate Cord 262

1. Basic Diagnostic Procedure

A: BASIC PROCEDURES

1. GENERAL DESCRIPTION

The most important purpose of diagnostics is to quickly determine which part is malfunctioning, to save time and labor.

2. IDENTIFICATION OF TROUBLE SYMPTOM

Determine what the problem is based on the symptom.

3. PROBABLE CAUSE OF TROUBLE

Look at the wiring diagram and check the system's circuit. Then check the switch, relay, fuse, ground, etc.

4. LOCATION AND REPAIR OF TROUBLE

1) Using the diagnostics, narrow down the causes.
2) If necessary, use a voltmeter, ohmmeter, etc.
3) Before replacing certain component parts (switch, relay, etc.), check the power supply, ground, for open wiring harness, poor connectors, etc. If no problem is encountered, check the component parts.

5. SYSTEM OPERATION CHECK

After repairing, ensure that the system operates properly.

B: BASIC INSPECTION

1. VOLTAGE MEASUREMENT

1) Using a voltmeter, connect the negative lead to a good ground point or negative battery terminal and the positive lead to the connector or component terminal.
2) Contact the positive lead of the voltmeter on connector (A). The voltmeter will indicate a voltage.
3) Shift the positive lead to connector (B). The voltmeter will indicate no voltage.

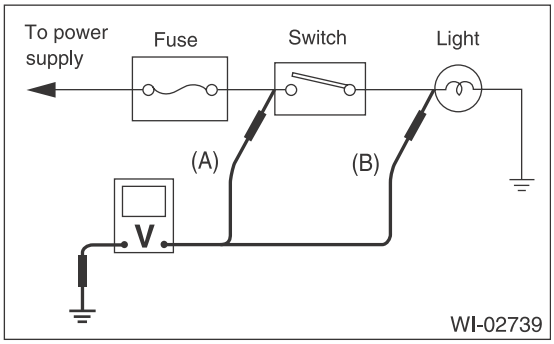

4) With the test set-up held as it is, turn the switch to ON. The voltmeter will indicate a voltage and, at the same time, the light will illuminate.
5) The circuit is in good order. If a problem such as a light failing to illuminate occurs, use the procedures outlined above to track down the malfunction.

2. CIRCUIT CONTINUITY CHECKS

1) Disconnect the battery terminal or connector so there is no voltage between the check points.
Contact the two leads of an ohmmeter to each of the check points.
If the circuit has diodes, reverse the two leads and check again.
2) Use an ohmmeter to check for diode continuity.
When contacting the negative lead to the diode positive side and the positive lead to the negative side, there should be continuity.
When contacting the two leads in reverse, there should be no continuity.

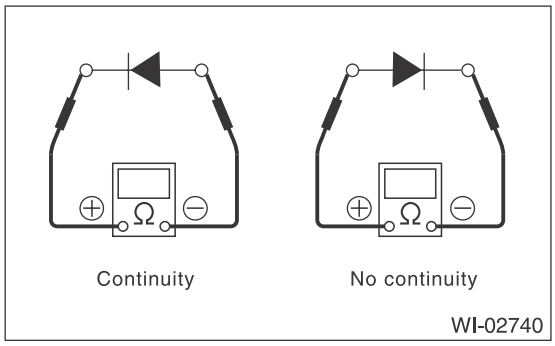

3) The symbol "❍ — ❍" indicates that continuity exists between two points or terminals. For example, when a switch position is at "3", continuity exists among terminals 1, 3 and 6, as shown in the table below.

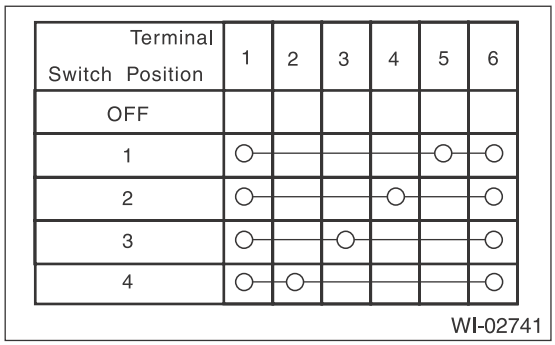

Terminal / Switch Position	1	2	3	4	5	6
OFF						
1	○				○	○
2	○			○		○
3	○		○			○
4	○	○				○

WI-02741

3. HOW TO DETERMINE AN OPEN CIRCUIT

1) WITH VOLTMETER:
An open circuit is determined by measuring the voltage between respective connectors and ground using a voltmeter, starting with the connector closest to the power supply. The power supply must be turned ON so that current flows in the circuit. If voltage is not present between a particular connector and ground, the circuit between that connector and the previous connector is open.

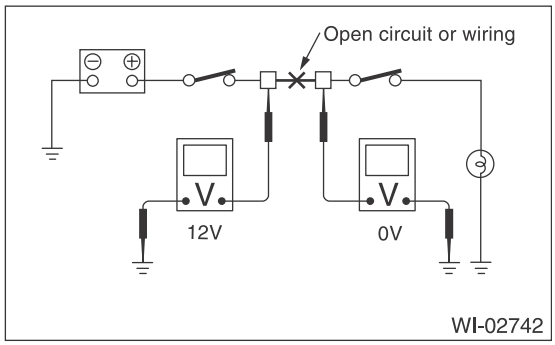

2) WITH OHMMETER:
Disconnect all connectors affected, and check continuity in the wiring between adjacent connectors. When the ohmmeter indicates “infinite”, the wiring is open.

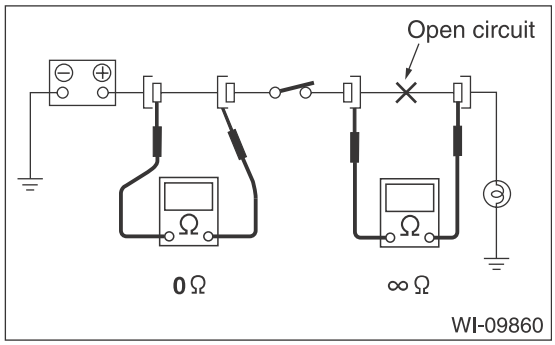

4. HOW TO DETERMINE A SHORT CIRCUIT

1) WITH TEST LIGHT:
Connect a test light (rated at approx. 3 watts) in place of the blown fuse and allow current to flow through the circuit. Disconnect one connector at a time from the circuit. Starting with the one located farthest from the power supply. If the test light goes out when a connector is disconnected, the wiring between that connector and the next connector (farther from the power supply) is shorted.

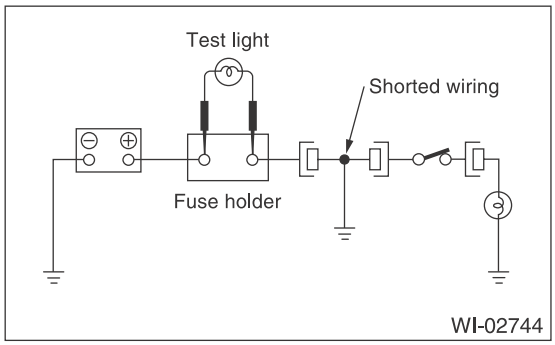

2) WITH OHMMETER:
Disconnect all affected connectors, and check continuity between each connector and ground. When the ohmmeter indicates continuity between a particular connector and a ground, that connector is shorted.

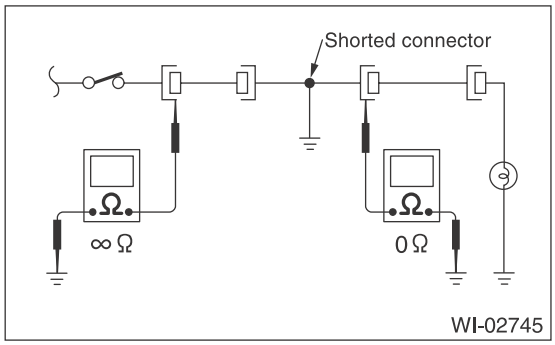

C: HOW TO READ WIRING DIAGRAMS

1. WIRING DIAGRAM

The wiring diagram of each system is illustrated so that you can understand the path through which the electric current flows from the battery.
Sketches and codes are used in the diagrams. They should read as follows:

- Each connector and its terminal position are indicated by a sketch of the connector in a disconnected state which is viewed from the front.

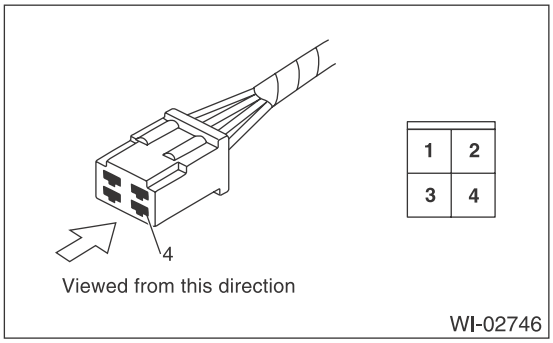

- The number of poles or pins, presence of a lock are indicated in the sketch of each connector. In the sketch, the highest pole number refers to the number of poles which the connector has. For example, the sketch of the connector shown in figure indicates the connector has 9 poles.

Connector used in vehicle	Connector shown in wiring diagram		
	Sketch	Symbol	Number of poles
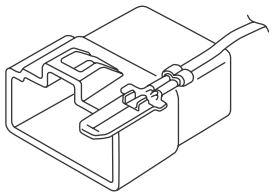	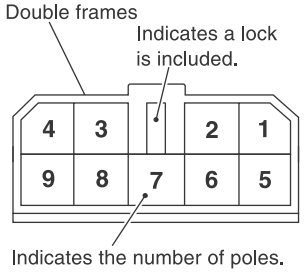	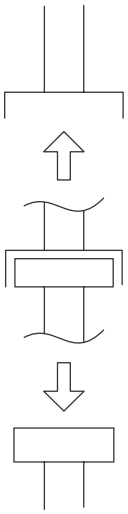	Numbered in order from upper right to lower left.
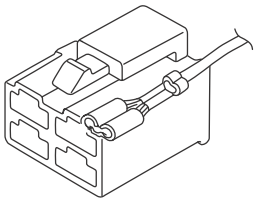	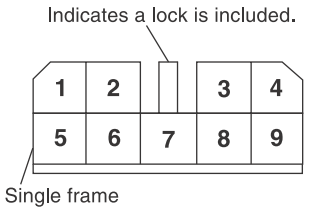		Numbered in order from upper left to lower right.

WI-02747

• When one set of connectors is viewed from the front side, the pole numbers of one connector are symmetrical to those of the other. When these two connectors are connected as a unit, the poles which have the same number are joined.

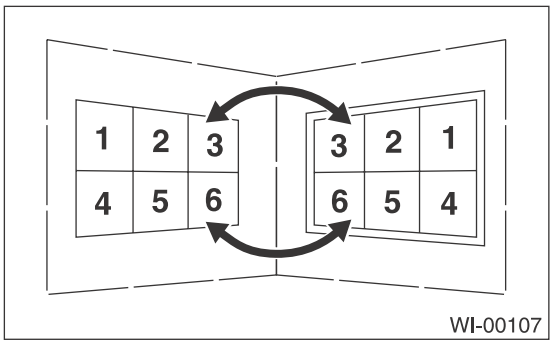

• WIRING DIAGRAM:
The connectors are numbered along with the number of poles, external colors, and mating connections in the accompanying list.
• The sketch of each connector in the wiring diagram usually shows the (A) side of the connector. The relationship between the wire color, terminal number and connector is described in the figure.

NOTE:
A wire which runs in one direction from a connector terminal sometimes may have a different color from that which runs in the other direction from that terminal.

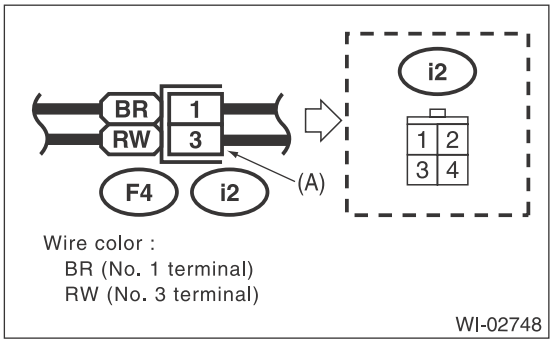

• In the wiring diagram, connectors which have no terminal number refer to one-pole types. Sketches of these connectors are omitted intentionally.

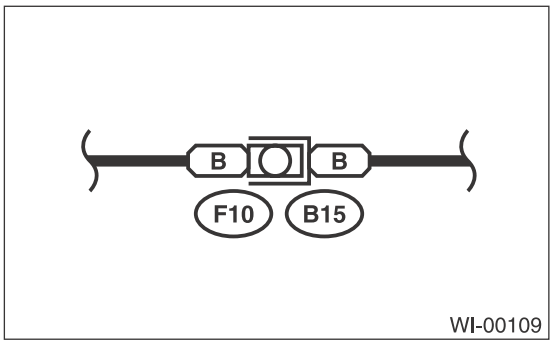

• The following color codes are used to indicate the colors of the wires.

Color code	Color
L	Blue
B	Black
Y	Yellow
G	Green
R	Red
W	White
Br	Brown
Lg	Light green
Gr	Gray
P	Pink
Or	Orange
Sb	Light blue
V	Violet
SA	Sealed (Inner)
SB	Sealed (Outer)

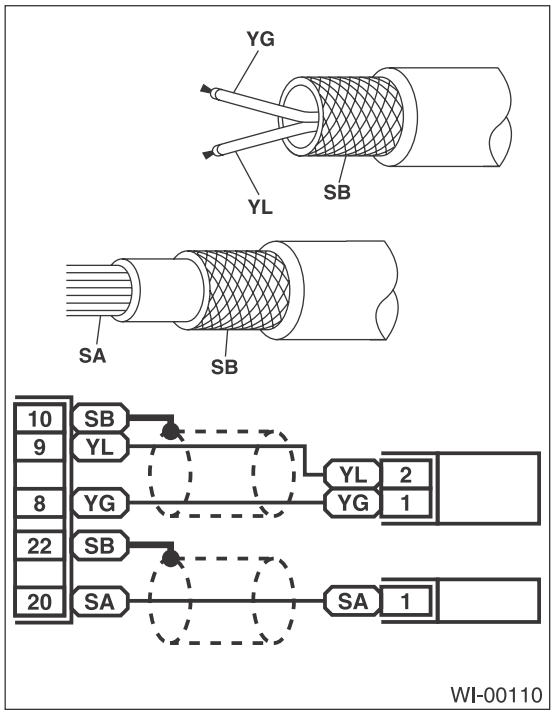

• The wire color code, which consists of two letters (or three letters including Br or Lg), indicates the standard color (base color of the wire covering) by its first letter and the stripe marking by its second letter.

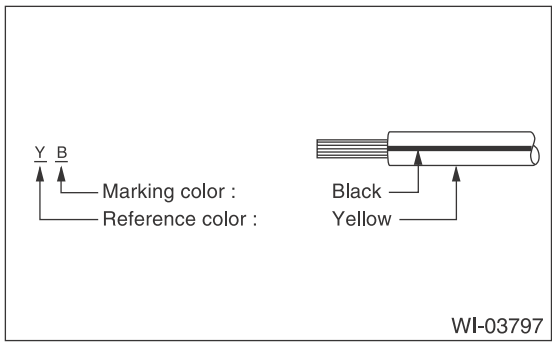

• The table lists the nominal sectional areas and allowable currents of the wires.

CAUTION:
When replacing or repairing a wire, be sure to use the same size and type of the wire which was originally used.

NOTE:
• The allowable current in the table indicates the tolerable amperage of each wire at an ambient temperature of 40°C (104°F).
• The allowable current changes with ambient temperature. Also, it changes if a bundle of more than two wires is used.

Nominal sectional area mm^2	No. of strands/ strand diameter	Outside diameter of wiring mm	Allowable current Amps/ 40°C (104°F)
0.3	7/0.26	1.8	7
0.5	7/0.32	2.2 (or 2.0)	12
0.75	30/0.18	2.6 (or 2.4)	16
0.85	11/0.32	2.4 (or 2.2)	16
1.25	16/0.32	2.7 (or 2.5)	21
2	26/0.32	3.1 (or 2.9)	28
3	41/0.32	3.8 (or 3.6)	38
5	65/0.32	4.6 (or 4.4)	51
8	50/0.45	5.5	67

• Each unit is either directly grounded to the body or indirectly grounds through a harness ground terminal. Different symbols are used in the wiring diagram to identify the two grounding systems.

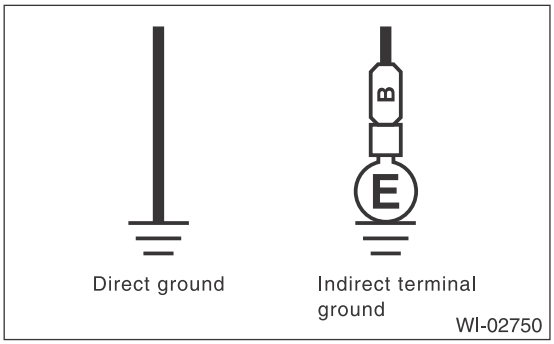

• The ground points shown in the wiring diagram refer to the following:

NOTE:
All wiring harnesses are provided with a ground point which should be securely connected.

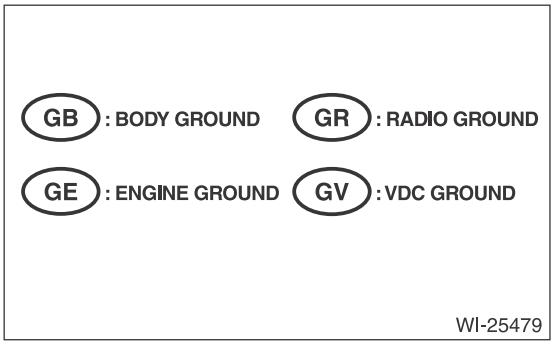

- Relays are classified as normally-open or normally-closed.

The normally-closed relay has one or more contacts. The wiring diagram shows the relay mode when the energizing circuit is OFF.

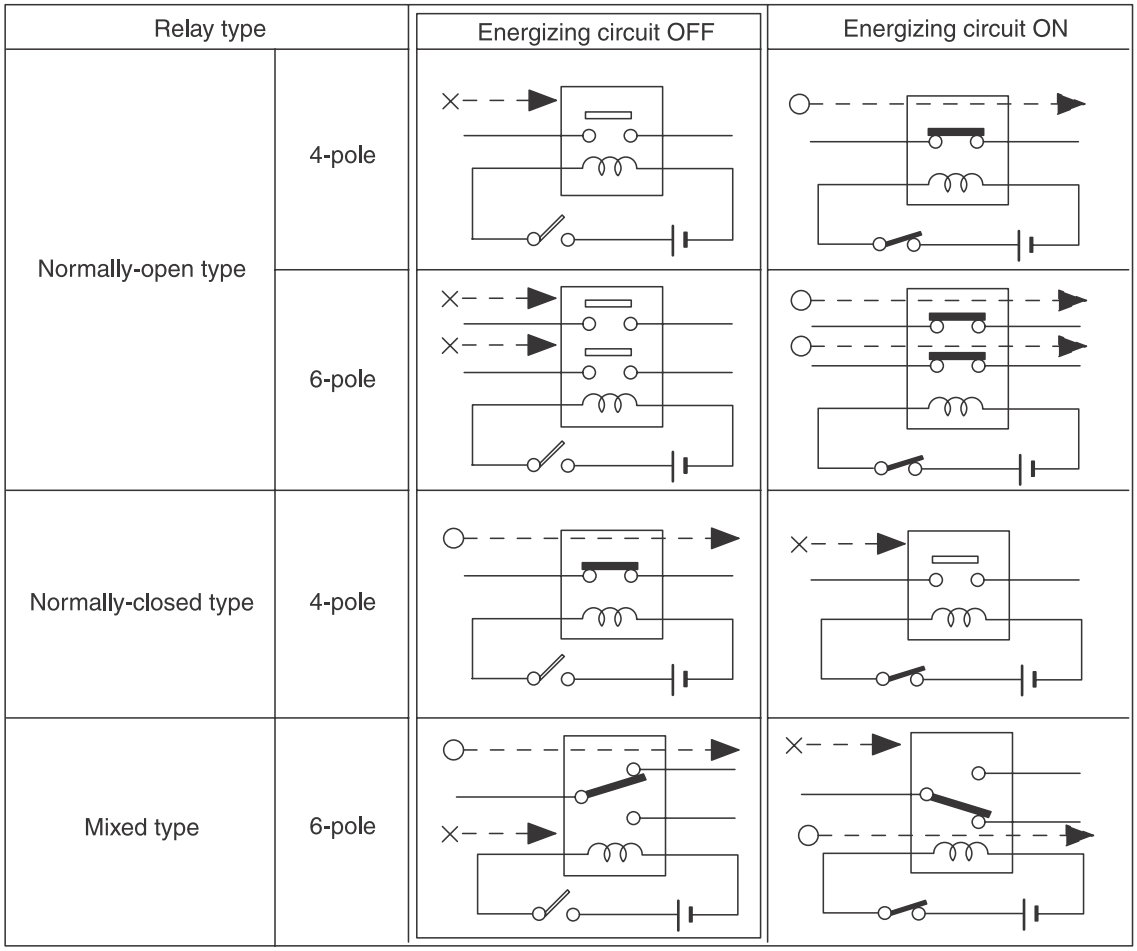

• Each connector number shown in the wiring diagram corresponds to that in the wiring harness. The location of each connector in the actual vehicle is determined by reading the first character of the connector (for example, a “F” for F8, “i” for i16, etc.) and the type of wiring harness. The first character of each connector number corresponds to the area or system of the vehicle.

Symbol	Wiring harness and cord
F	Front wiring harness
B	Bulkhead wiring harness
E	Engine wiring harness
T	Transmission cord
D	Door cord LH & RH, Rear gate cord Rear door cord LH & RH
i	Instrument panel wiring harness
R	Rear wiring harness, Fuel tank cord, Roof cord, Rear gate cord,
AB	Airbag wiring harness

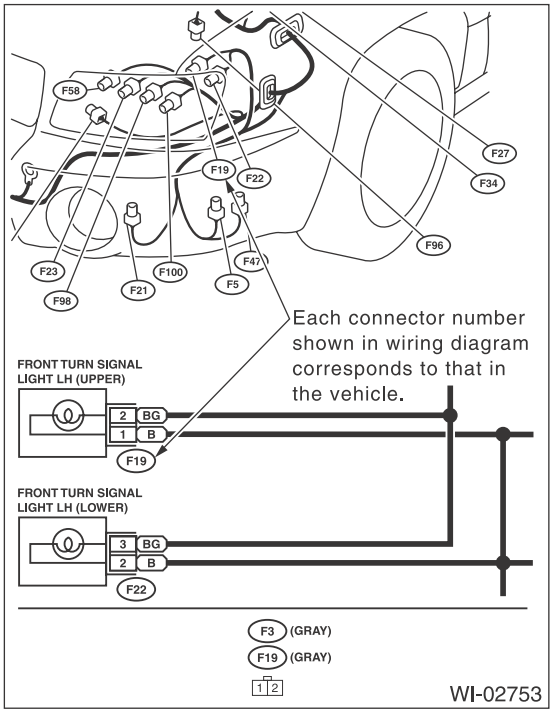

D: SYMBOLS IN WIRING DIAGRAMS

A number of symbols are used in each wiring diagram to easily identify parts or circuits.

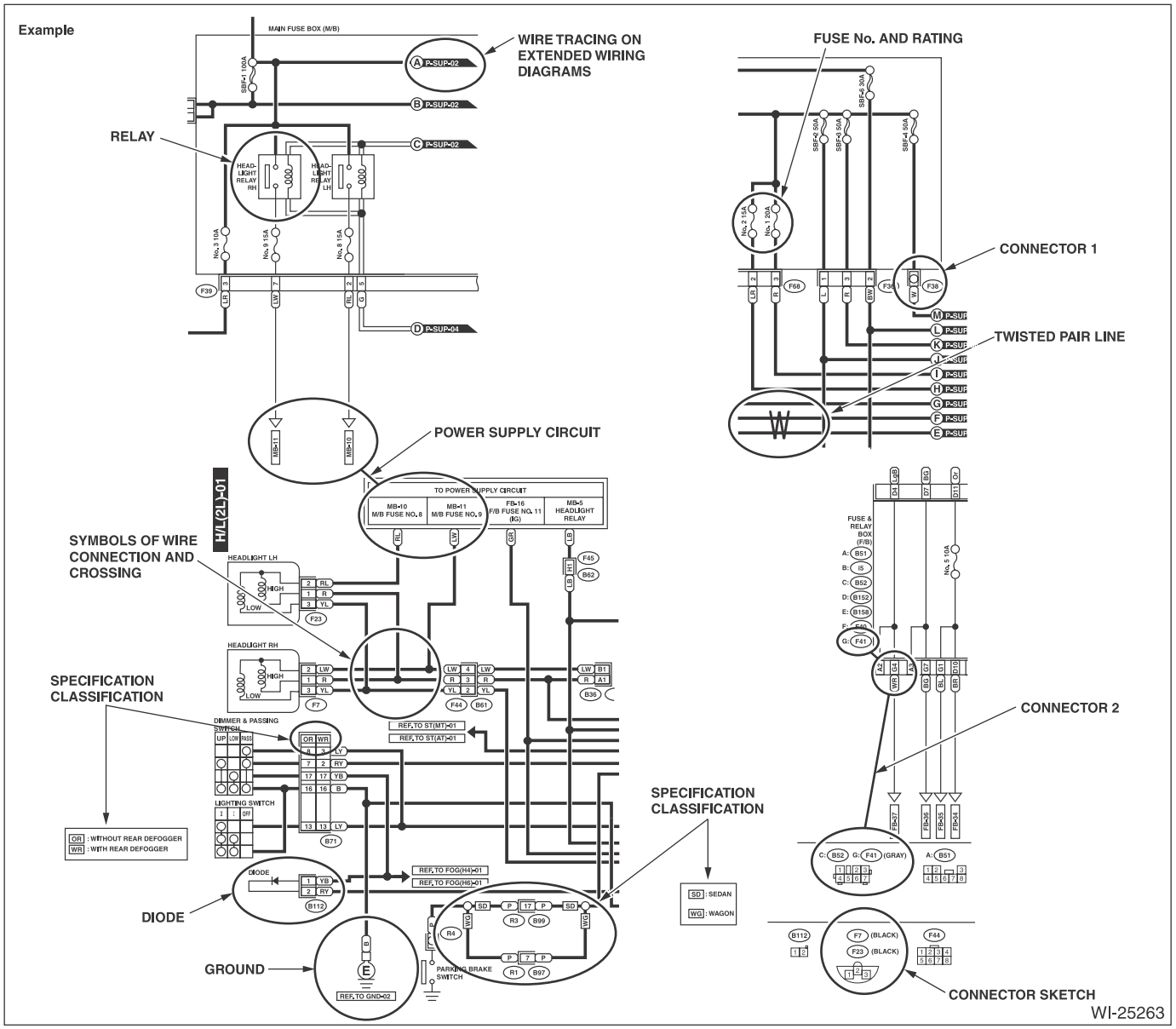

1. RELAY

A symbol used to indicate a relay.

2. CONNECTOR 1

The sketch of the connector indicates the one-pole types.

3. WIRING CONNECTION

Some wiring diagrams are indicated in foldouts for convenience. Wiring destinations are indicated where necessary by corresponding symbols. (When two pages are needed for clear indication)

4. FUSE NO. & RATING

The “FUSE No. & RATING” corresponds with that used in the fuse box (main fuse box, fuse and joint box).

5. CONNECTOR 2

- Each connector is indicated by a symbol.
- Each terminal number is indicated in the corresponding wiring diagram in an abbreviated form.
- For example, terminal number “G4” refers to No. 4 terminal of connector (G: F41) shown in the connector sketch.

6. CONNECTOR SKETCH

- Each connector sketch clearly identifies the shape and color of a connector as well as terminal locations. Non-colored connectors are indicated in white or natural color.
- When more than two types of connector number are indicated in a connector sketch, it means that the same type connectors are used.

7. GROUND

Each grounding point can be located easily by referring to the corresponding wiring harness.

8. DIODE

A symbol is used to indicate a diode.

9. WIRE TRACING ON EXTENDED WIRING DIAGRAMS

For a wiring diagram extending over at least two pages, a symbol (consisting of the same characters with arrows), facilitates wire tracing from one page to the next.

A ←→ A, B ←→ B

10.SYMBOLS OF WIRE CONNECTION AND CROSSING

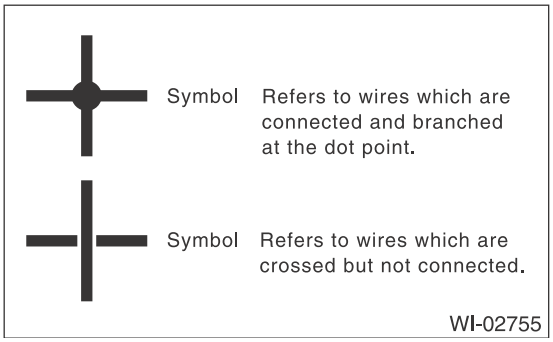

11.POWER SUPPLY CIRCUIT

A symbol is used to indicate the power supply in each wiring diagram.

“MB — 5”, “MB — 6”, etc., which are used as power- supply symbols throughout the text, correspond with those shown in the “DC POWER SUPPLY CIRCUIT” in the wiring diagram.

Accordingly, using the “DC POWER SUPPLY CIRCUIT” and wiring diagrams permits service personnel to understand the entire electrical arrangement of a system.

12.CLASSIFICATION BY SPECIFICATION

When the wiring diagram differ according to vehicle specifications, the specification difference is described by using abbreviations.

13.TWISTED PAIR LINE

Twisted pair lines are indicated in the following manner in the wiring diagrams.

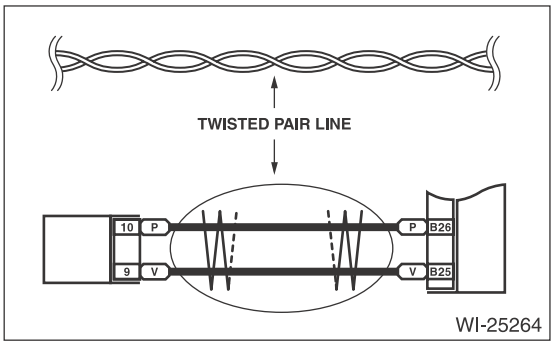

E: CONNECTOR SYMBOL IN WIRING HARNESS

A number of connector symbols are used in each wiring diagram to easily identify the wiring harness connectors.

Standard type: Female		
Pole: From 1 to 8	Pole: From 9 to 20	Pole: More than 21
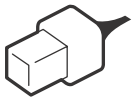	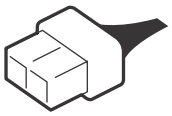	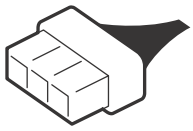
		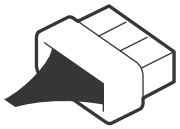
Standard type: Male		
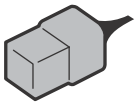	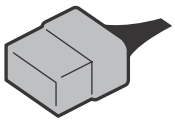	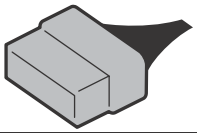
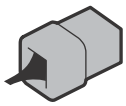	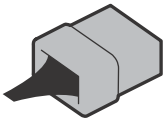	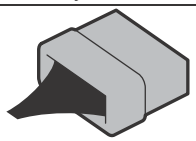

Water proof type: Female		
Pole: From 1 to 8	Pole: From 9 to 20	Pole: More than 21
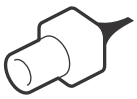		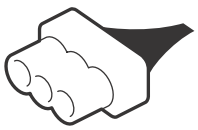
		
Water proof type: Male		
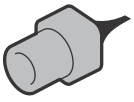	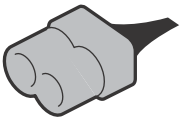	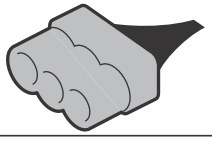
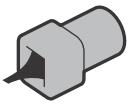	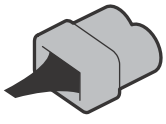	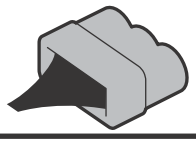

WI-02756

F: ABBREVIATION IN WIRING DIAGRAMS

Abbr.	Full name
A/B	Airbag
A/C	Air Conditioner
A/F	Air/Fuel (Air fuel ratio sensor)
ABS	Anti-lock Brake System
ACC	Accessory
ALT	Generator
ASSY	Assembly
AT	Automatic Transmission
ATF	Automatic Transmission Fluid
AWD	All Wheel Drive
B, BAT	Battery
CAN	Communication Area Network
CM	Control module
CVT	Continuously Variable Transmission
D	Drive Range
DN	Down
E	Ground
ECO	Economy
ECM	Engine Control Module
EEPROM	Electrically Erasable Programmable Read-Only Memory
EGR	Exhaust Gas Recirculation
EPB	Electronic Parking Brake
F/B	Fuse & Relay Box
FL	Front Left
FR	Front Right
G	Gravity (G sensor)
H/L	Headlight
HI	High
I/F	Interface
IG	Ignition
ILLUMI	Illumination
INT	Intermittent
J/C	Joint connector
LCD	Liquid Crystal Display
L, LH	Left Hand
LO	Low
M	Motor
M/B	Main Fuse Box
MIST	Wiper for mist (one touch)
MT	Manual Transmission
N	Neutral Range
NA	Natural Aspiration
OP	Optional Parts or Open
P	Parking Range
PASS	Passing
R	Reverse Range
R, RH	Right Hand

Abbr.	Full name
RL	Rear Left
RR	Rear Right
SBF	Slow Blow Fuse
ST	Starter
SW	Switch
TCM	Transmission Control Module
TPMS	Tire Pressure Monitor System
UP	Up
VDC	Vehicle Dynamics Control
VFD	Vacuum Fluorescent Display
WASH	Washer

2. Working Precautions

A: PRECAUTIONS WHEN WORKING WITH THE PARTS MOUNTED ON THE VEHICLE

1) When working under a vehicle which is jacked-up, always be sure to use rigid rack.
2) The parking brake must always be applied during working. Also, in automatic transmission vehicles, keep the select lever set to the P (Parking) range.
3) Be sure the workshop is properly ventilated when running the engine. Further, be careful not to touch the belt or fan while the engine is operating.
4) Be careful not to touch hot metal parts, especially the radiator and exhaust system immediately after the engine has been turned off.

B: PRECAUTIONS IN TROUBLE DIAGNOSIS AND REPAIR OF ELECTRIC PARTS

1) The battery cable must be disconnected from the battery's (–) terminal, and the ignition switch must be set to the OFF position, unless otherwise required by the diagnostics.
2) Securely fasten the wiring harness with clamps and clips so that the harness does not interfere with the body end parts or edges and bolts or screws.
3) When installing parts, be careful not to catch them on the wiring harness.
4) When disconnecting a connector, do not pull the wires, but pull while holding the connector body.

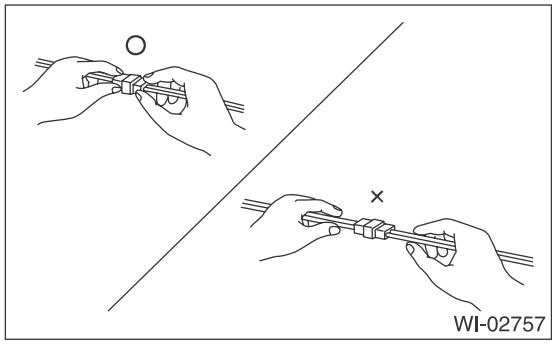

5) Some connectors are provided with a lock. One type of such a connector is disconnected by pushing the lock, and the other, by moving the lock up. In either type the lock shape must be identified before attempting to disconnect the connector.
To connect, insert the connector until it snaps and confirm that it is connected securely.

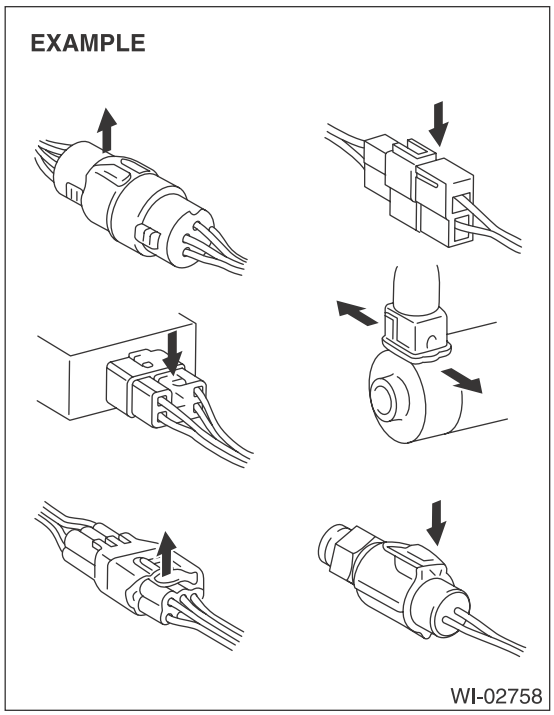

6) When checking continuity between connector terminals, or measuring voltage across the terminal and ground, always contact tester probe(s) on terminals from the wiring connection side. If the probe is too thick to gain access to the terminal, use "mini" test leads.
To check water-proof connectors (which are not measurable from the wiring side), contact test probes on the terminal side. Be careful not to bend or damage the terminals.

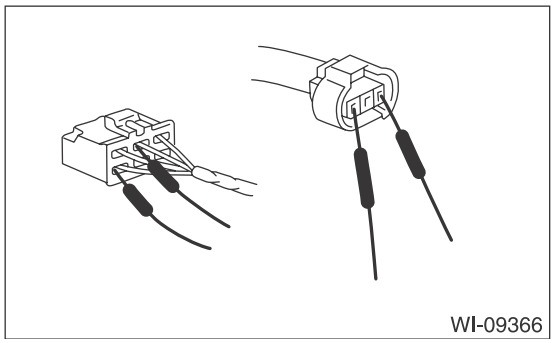

7) Sensors, relays, electrical unit, etc., are sensitive to strong impacts.
Handle them with care so that they are not dropped or mishandled.

3. Power Supply Circuit

A: WIRING DIAGRAM

- **Engine room side**

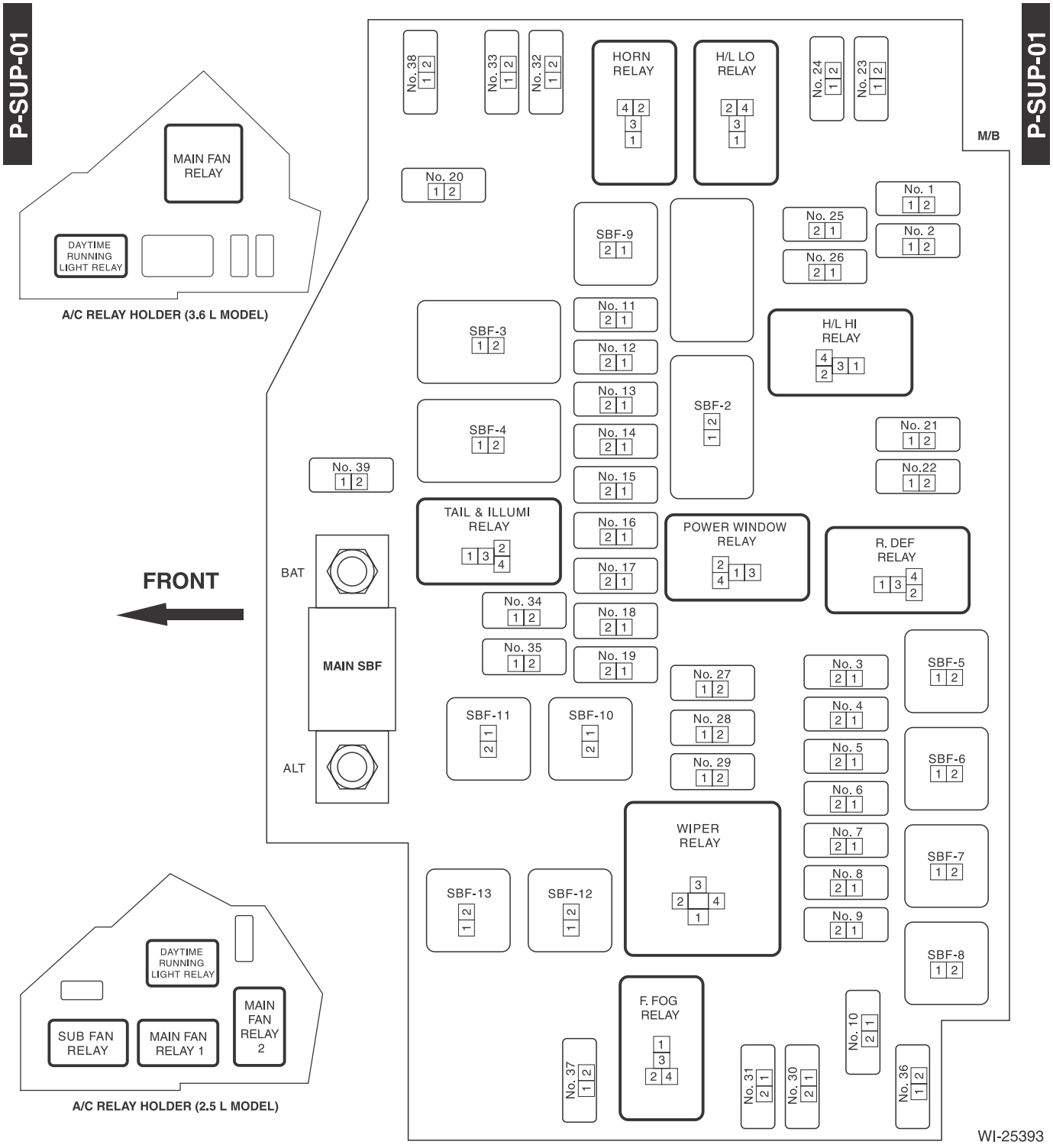

- **Passenger room side**

P-SUP-02

P-SUP-02

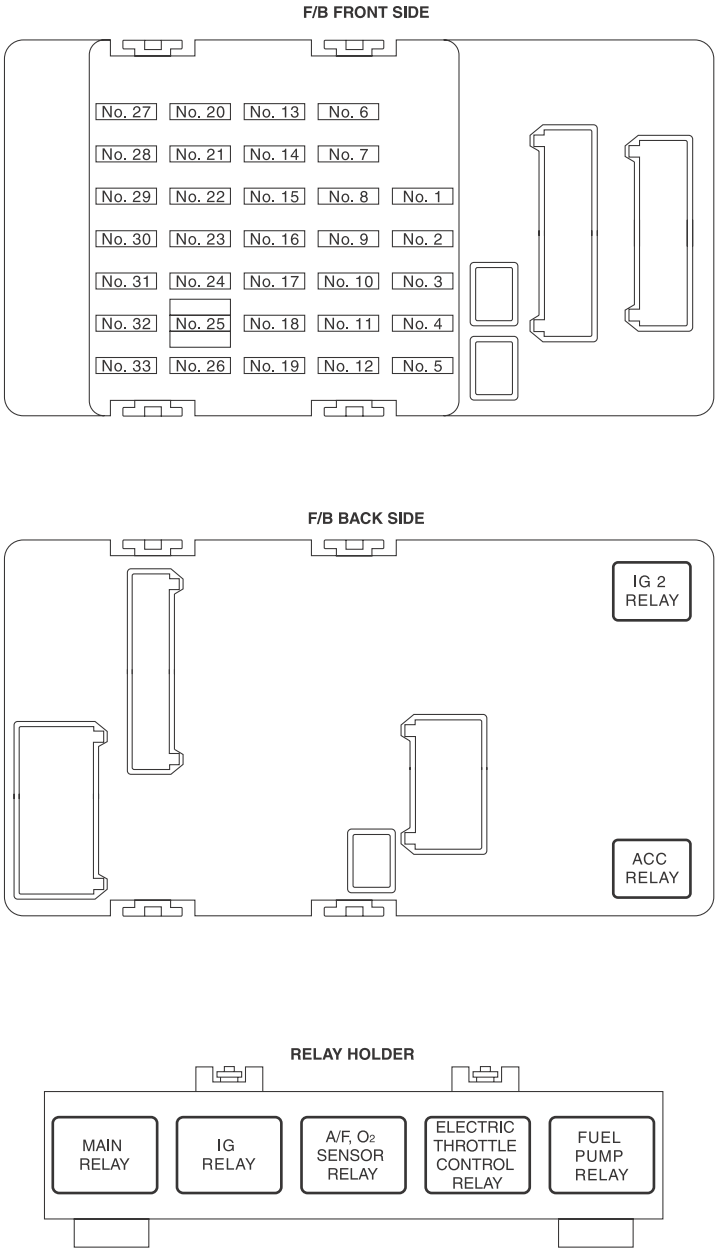

WI-24813

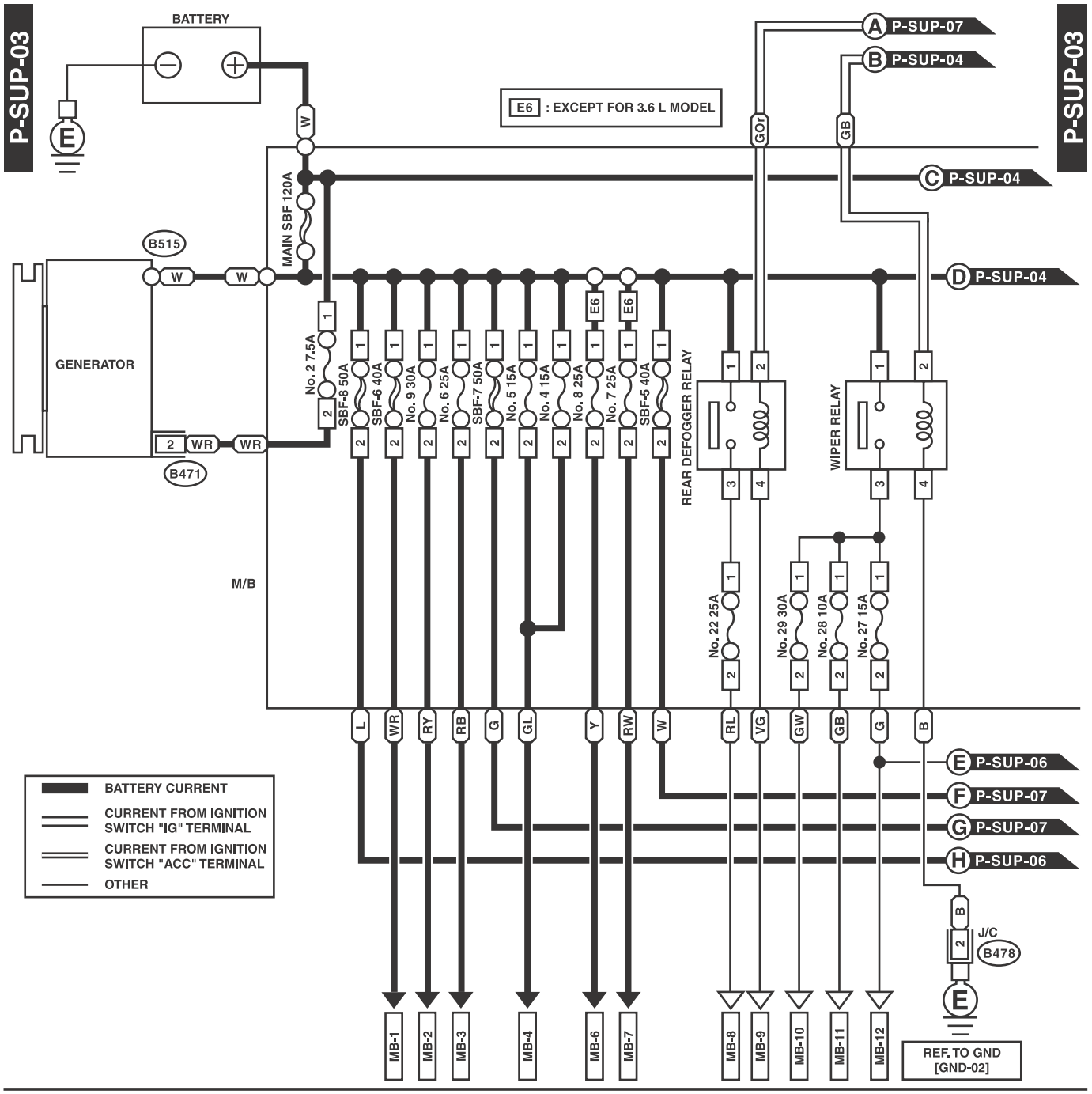
P-SUP-03
BATTERY
E6 : EXCEPT FOR 3.6 L MODEL
A P-SUP-07
B P-SUP-04
C P-SUP-04
D P-SUP-04
E P-SUP-06
F P-SUP-07
G P-SUP-07
H P-SUP-06
B515
MAIN SBF 120A
GENERATOR
B471
M/B
No. 2 7.5A
SBF-8 50A
SBF-6 40A
No. 9 30A
No. 6 25A
SBF-7 50A
No. 5 15A
No. 4 15A
No. 8 25A
No. 7 25A
SBF-5 40A
REAR DEFOGGER RELAY
WIPER RELAY
No. 22 25A
No. 29 30A
No. 28 10A
No. 27 15A
J/C
B478
REF. TO GND
[GND-02]
MB-1
MB-2
MB-3
MB-4
MB-6
MB-7
MB-8
MB-9
MB-10
MB-11
MB-12
BATTERY CURRENT
CURRENT FROM IGNITION SWITCH "IG" TERMINAL
CURRENT FROM IGNITION SWITCH "ACC" TERMINAL
OTHER

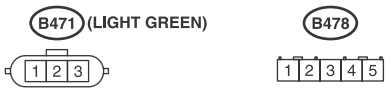
B471 (LIGHT GREEN)
B478

WI-25394

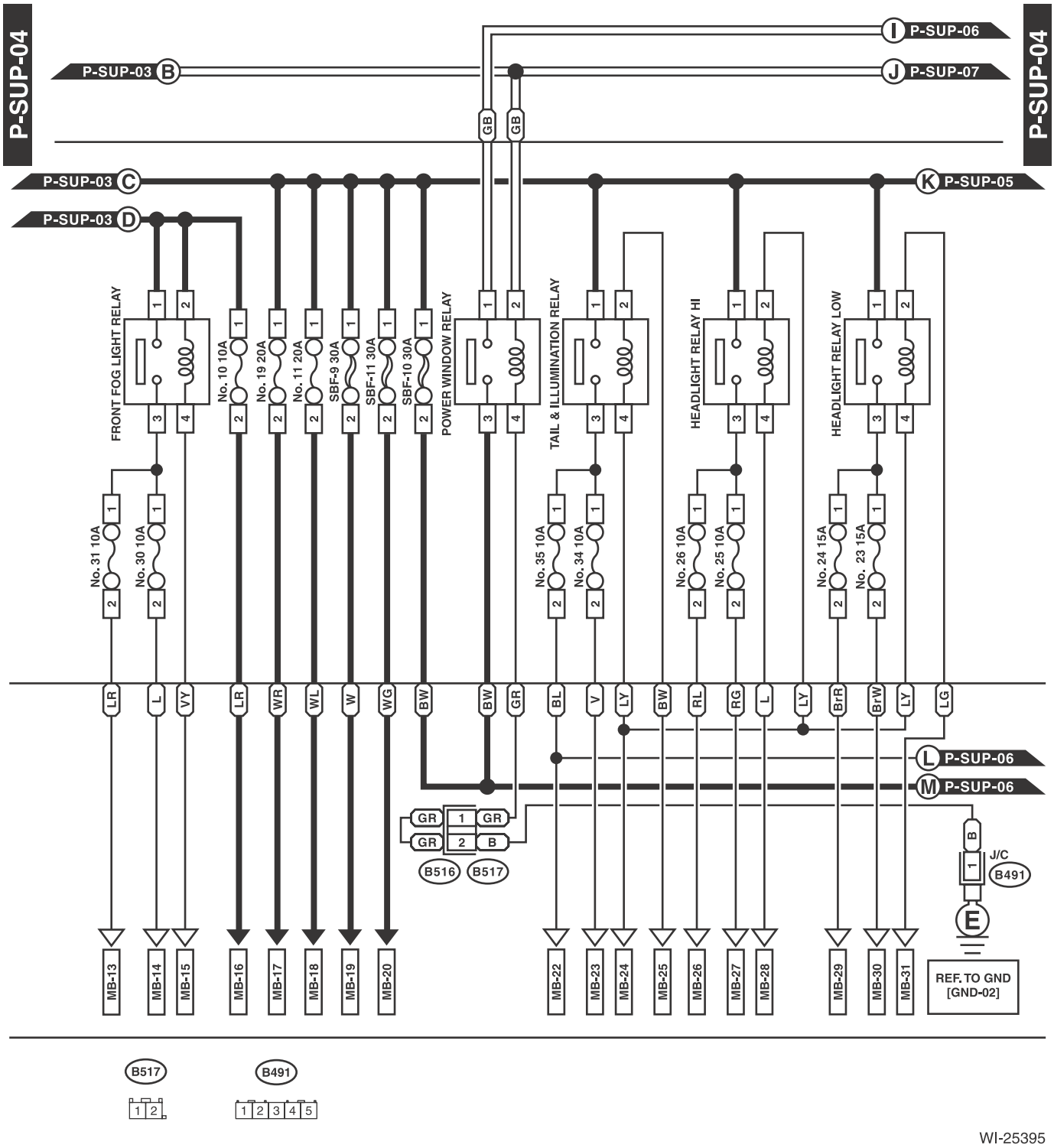
P-SUP-04
P-SUP-04
P-SUP-03 B
P-SUP-03 C
P-SUP-03 D
I P-SUP-06
J P-SUP-07
K P-SUP-05
GB
GB
FRONT FOG LIGHT RELAY
No. 10 10A
No. 19 20A
No. 11 20A
SBF-9 30A
SBF-11 30A
SBF-10 30A
POWER WINDOW RELAY
TAIL & ILLUMINATION RELAY
HEADLIGHT RELAY HI
HEADLIGHT RELAY LOW
No. 31 10A
No. 30 10A
No. 35 10A
No. 34 10A
No. 26 10A
No. 25 10A
No. 24 15A
No. 23 15A
LR
L
VY
LR
WR
WL
W
WG
BW
BW
GR
BL
V
LY
BW
RL
RG
L
LY
BrR
BrW
LY
LG
L P-SUP-06
M P-SUP-06
GR
GR
GR
B
B516
B517
B
J/C
B491
E
REF. TO GND
[GND-02]
MB-13
MB-14
MB-15
MB-16
MB-17
MB-18
MB-19
MB-20
MB-22
MB-23
MB-24
MB-25
MB-26
MB-27
MB-28
MB-29
MB-30
MB-31
B517
1 2
B491
1 2 3 4 5

WI-25395

Power Supply Circuit

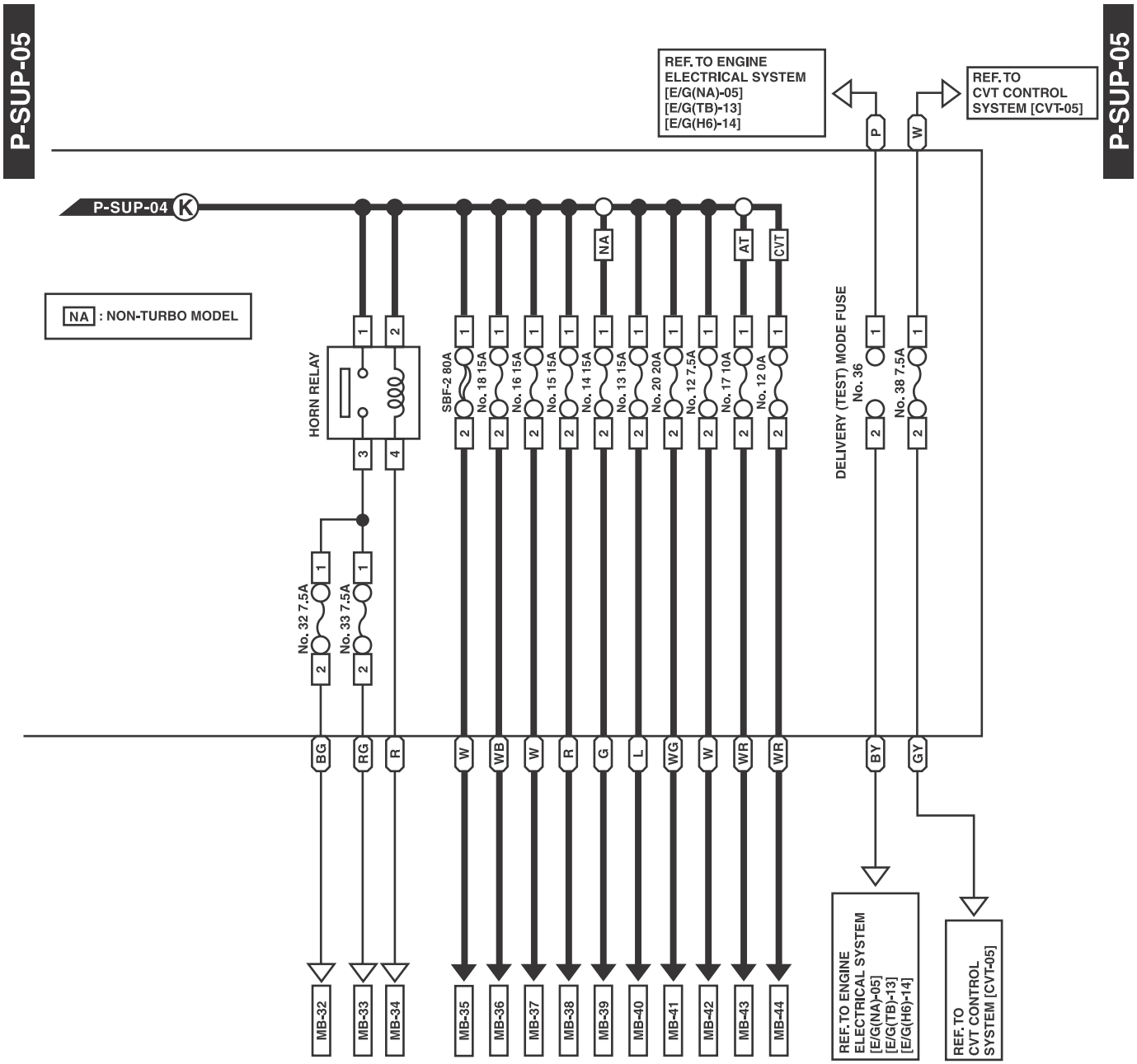

WI-25396

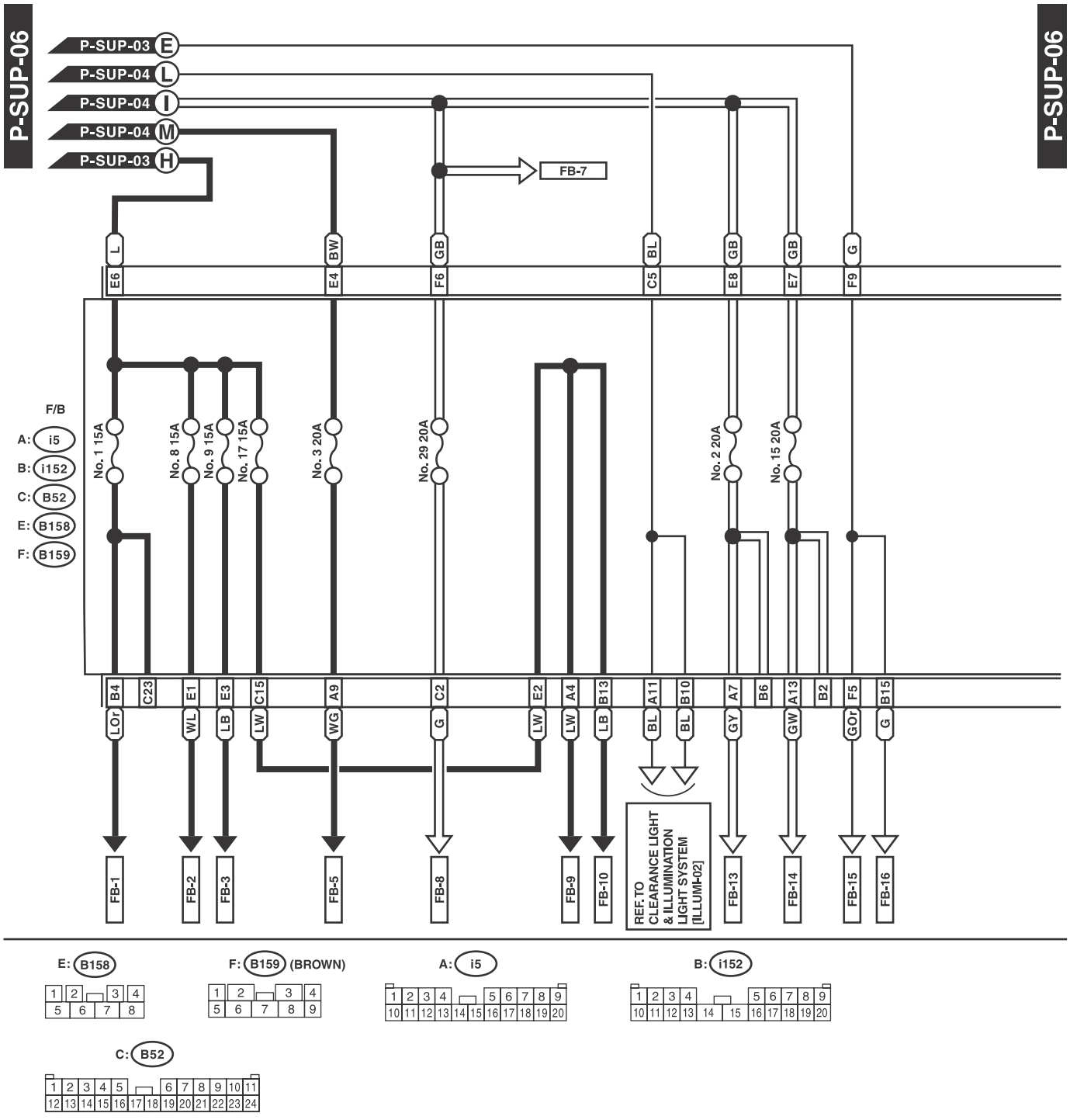
P-SUP-06
P-SUP-06
P-SUP-03 E
P-SUP-04 L
P-SUP-04 I
P-SUP-04 M
P-SUP-03 H
FB-7
L
BW
GB
BL
GB
GB
G
E6
E4
F6
C5
E8
E7
F9
F/B
A: i5
B: i152
C: B52
E: B158
F: B159
No. 1 15A
No. 8 15A
No. 9 15A
No. 17 15A
No. 3 20A
No. 29 20A
No. 2 20A
No. 15 20A
B4
C23
E1
E3
C15
A9
C2
E2
A4
B13
A11
B10
A7
B6
A13
B2
F5
B15
LOr
WL
LB
LW
WG
G
LW
LW
LB
BL
BL
GY
GW
GOr
G
FB-1
FB-2
FB-3
FB-5
FB-8
FB-9
FB-10
REF. TO CLEARANCE LIGHT & ILLUMINATION LIGHT SYSTEM [ILLUMI-02]
FB-13
FB-14
FB-15
FB-16
E: B158
F: B159 (BROWN)
A: i5
B: i152
C: B52

WI-25397

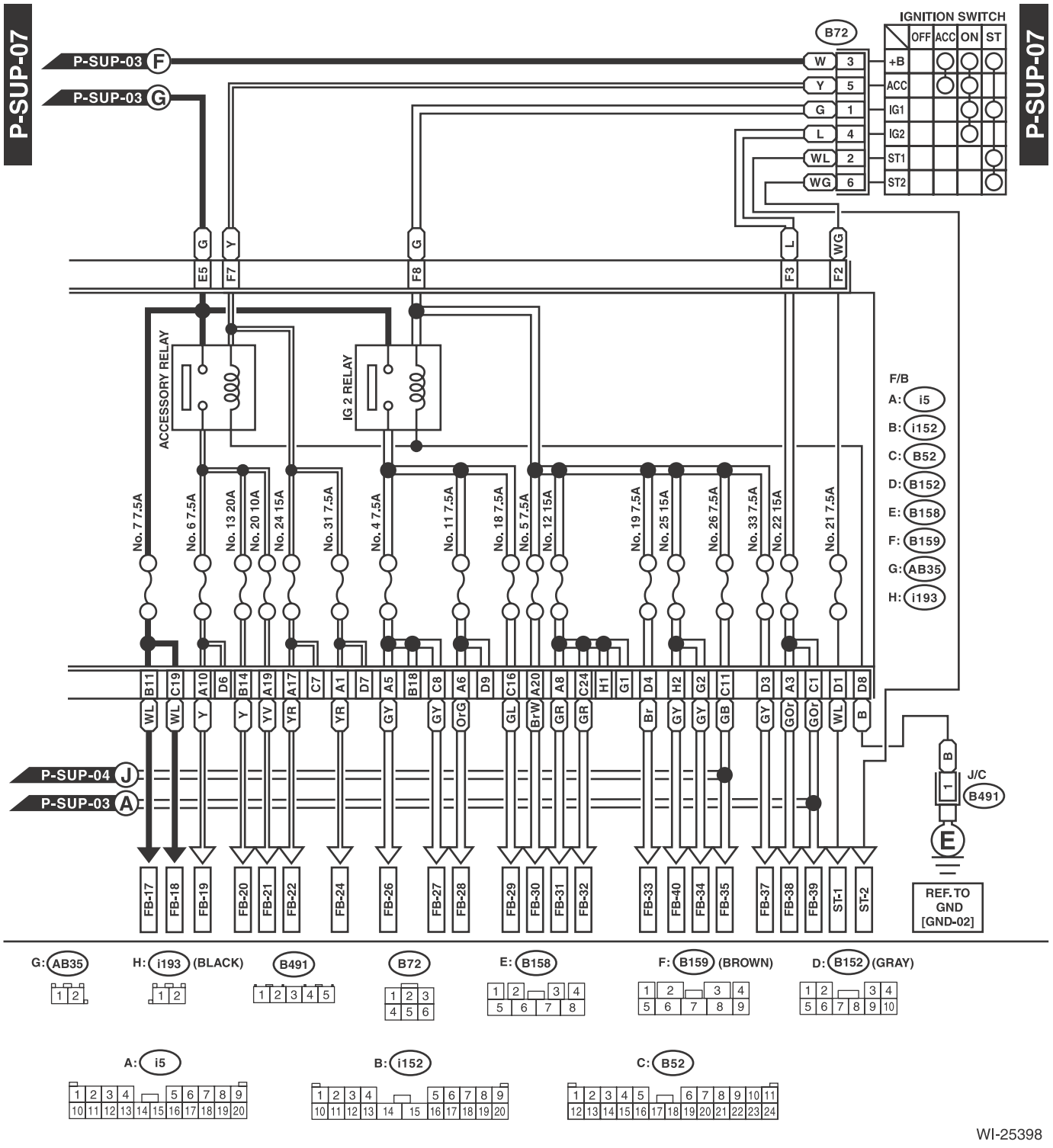
P-SUP-07
P-SUP-03 F
P-SUP-03 G
P-SUP-04 J
P-SUP-03 A
B72
IGNITION SWITCH
OFF ACC ON ST
+B
ACC
IG1
IG2
ST1
ST2
W 3
Y 5
G 1
L 4
WL 2
WG 6
E5 F7 F8 F3 F2
ACCESSORY RELAY
IG 2 RELAY
No. 7 7.5A
No. 6 7.5A
No. 13 20A
No. 20 10A
No. 24 15A
No. 31 7.5A
No. 4 7.5A
No. 11 7.5A
No. 18 7.5A
No. 5 7.5A
No. 12 15A
No. 19 7.5A
No. 25 15A
No. 26 7.5A
No. 33 7.5A
No. 22 15A
No. 21 7.5A
F/B
A: i5
B: i152
C: B52
D: B152
E: B158
F: B159
G: AB35
H: i193
B11 C19 A10 D6 B14 A19 A17 C7 A1 D7 A5 B18 C8 A6 D9 C16 A20 A8 C24 H1 G1 D4 H2 G2 C11 D3 A3 C1 D1 D8
WL WL Y Y YV YR YR GY GY OrG GL BrW GR GR Br GY GY GB GY GOr GOr WL B
FB-17 FB-18 FB-19 FB-20 FB-21 FB-22 FB-24 FB-26 FB-27 FB-28 FB-29 FB-30 FB-31 FB-32 FB-33 FB-40 FB-34 FB-35 FB-37 FB-38 FB-39 ST-1 ST-2
J/C B491
REF. TO GND [GND-02]
G: AB35
H: i193 (BLACK)
B491
B72
E: B158
F: B159 (BROWN)
D: B152 (GRAY)
A: i5
B: i152
C: B52

WI-25398

No.	Load
MB-1	VDC CM
MB-2	VDC CM
MB-3	Audio
	Navigation unit
	Audio amplifier (McIntosh)
MB-4	Blower motor relay
MB-6	Main fan relay 1
MB-7	Sub fan relay
MB-8	Mirror heater relay
	Rear defogger
MB-9	Body integrated unit
MB-10	Front wiper motor
	Combination Switch (Wiper)
MB-11	Front washer motor
MB-12	Rear washer motor
MB-13	Front fog light RH
MB-14	Front fog light LH
MB-15	Body integrated unit
MB-16	Body integrated unit
	Clock
	Audio
	Navigation unit
	Luggage room light
	Door step light LH
	Door step light RH
	Trunk room light
	Spot map light
	Room light
	Vanity mirror light LH
	Vanity mirror light RH
	Keyless entry CM
	Puddle light LH
	Puddle light RH
MB-17	Body integrated unit
MB-18	Sunroof motor assembly
MB-19	EPB CM
MB-20	Power seat LH
	Power seat RH
MB-22	Front combination light LH (clearance light)
	Front combination light RH (clearance light)
	F/B

No.	Load
MB-23	Satellite switch illumination
	AT select lever illumination
	Illumination control switch
	Remote control mirror switch
	Lower cover switch
	Glove box light
	Hill hold switch
	Audio
	Navigation unit
	Seat heater switch (power seat)
	Shower light
	A/C control panel
	EPB control switch
MB-24	Body integrated unit
MB-25	Body integrated unit
MB-26	Front combination light RH (headlight)
MB-27	Front combination light LH (headlight)
MB-28	Body integrated unit
MB-29	Front combination light RH (headlight)
MB-30	Front combination light LH (headlight)
MB-31	Body integrated unit
MB-32	Horn
MB-33	Horn
MB-34	Body integrated unit
	Horn switch
MB-35	Main fan relay
MB-36	Body integrated unit
	Key warning switch
	Turn signal and hazard unit
MB-37	Main relay
MB-38	A/F, oxygen sensor relay
MB-39	IG relay
MB-40	Electronic throttle control relay
MB-41	Fuel pump relay
MB-42	ECM
	Data link connector
MB-43	TCM
MB-44	Self shut relay
	TCM
ST-1	Inhibitor relay
	Starter relay

No.	Load
ST-2	Starter relay
FB-1	Trailer connector
FB-2	Stop light & brake switch
	Stop light register
FB-3	Seat heater relay
FB-5	Power window main switch
FB-7	Power window circuit breaker
FB-8	Front power window sub switch
FB-9	Wiper deicer relay
FB-10	Mirror heater relay
FB-13	Rear power window sub switch LH
FB-14	Rear power window sub switch RH
FB-15	Body integrated unit
FB-16	Rear wiper motor
FB-17	Combination meter
	Body integrated unit
	Impact sensor
	EPB control switch
	A/C CM
	TPMS CM
FB-18	Security CM
FB-19	Remote control mirror switch
	Seat heater relay
	Rearview mirror
FB-20	Rear accessory power supply socket
FB-21	Front accessory power supply socket
FB-22	Audio
	Navigation unit
FB-24	Body integrated unit
	A/C control panel
	A/C CM
FB-26	Impact sensor
	Wiper deicer relay
	A/C control panel
	Navigation unit
	Sunroof motor assembly
	TPMS CM
FB-27	ECM
	Data link connector
	Stop light & brake switch
	Clutch switch

No.	Load
FB-28	Turn signal and hazard unit
FB-29	Inhibitor switch
	Back-up light switch
	Back-up light relay
FB-30	Combination meter
	Clock
FB-31	A/C CM
	Body integrated unit
FB-32	TCM
	ECM
	Fuel pump relay
	Ignition coil No. 1 (turbo model)
	Ignition coil No. 2 (turbo model)
	Ignition coil No. 3 (turbo model)
	Ignition coil No. 4 (turbo model)
FB-33	Hill hold switch
	EPB CM
FB-34	Airbag CM
FB-35	Main fan relay 1 (Except for 3.6 L model)
	Main fan relay 2 (Except for 3.6 L model)
	Main fan relay (3.6 L model)
FB-37	VDC CM
	Steering angle sensor
FB-38	Blower motor relay
	Intake door actuator
FB-39	Sub fan relay
FB-40	Occupant detection control module

4. Ground Circuit

A: WIRING DIAGRAM

1. CHASSIS GROUND

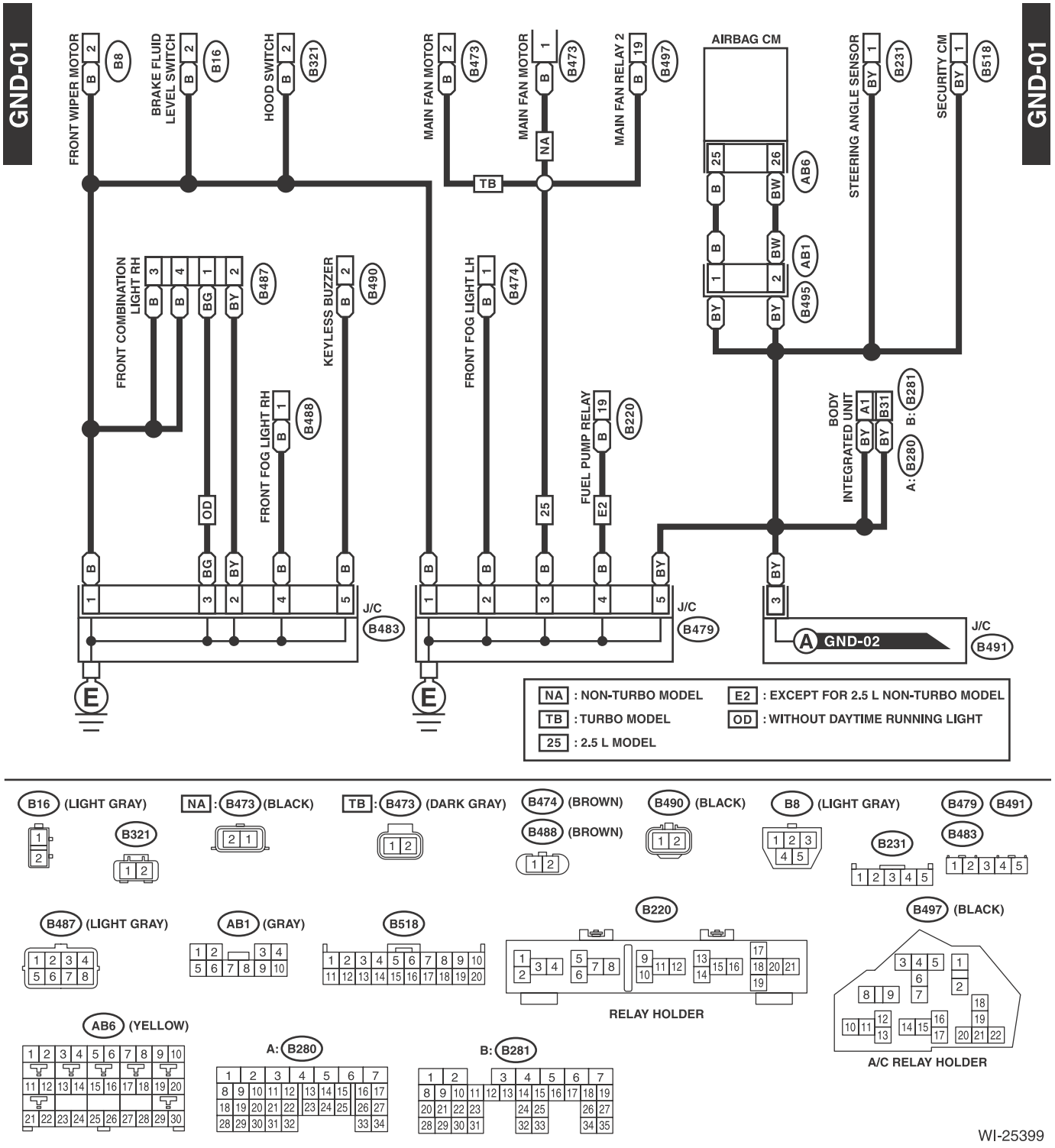

WI-25399

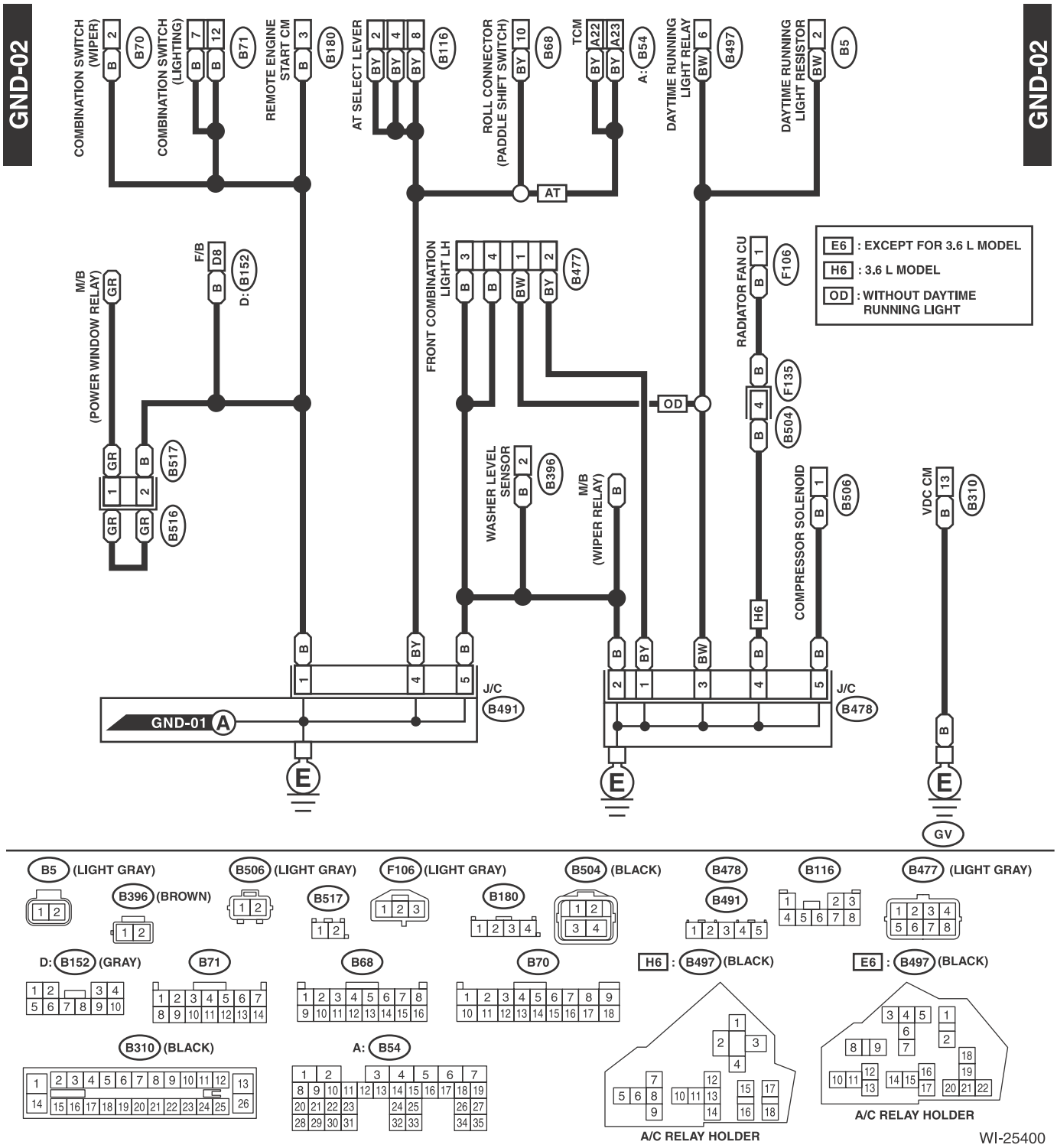
GND-02
GND-02
COMBINATION SWITCH (WIPER)
COMBINATION SWITCH (LIGHTING)
REMOTE ENGINE START CM
AT SELECT LEVER
ROLL CONNECTOR (PADDLE SHIFT SWITCH)
TCM
DAYTIME RUNNING LIGHT RELAY
DAYTIME RUNNING LIGHT RESISTOR
AT
M/B (POWER WINDOW RELAY)
F/B
D: B152
FRONT COMBINATION LIGHT LH
RADIATOR FAN CU
OD
E6 : EXCEPT FOR 3.6 L MODEL
H6 : 3.6 L MODEL
OD : WITHOUT DAYTIME RUNNING LIGHT
WASHER LEVEL SENSOR
M/B (WIPER RELAY)
COMPRESSOR SOLENOID
VDC CM
J/C
GND-01 A
GV

B5 (LIGHT GRAY)
B396 (BROWN)
B506 (LIGHT GRAY)
B517
F106 (LIGHT GRAY)
B180
B504 (BLACK)
B478
B491
B116
B477 (LIGHT GRAY)
D: B152 (GRAY)
B71
B68
B70
H6 : B497 (BLACK)
E6 : B497 (BLACK)
B310 (BLACK)
A: B54
A/C RELAY HOLDER
A/C RELAY HOLDER

WI-25400

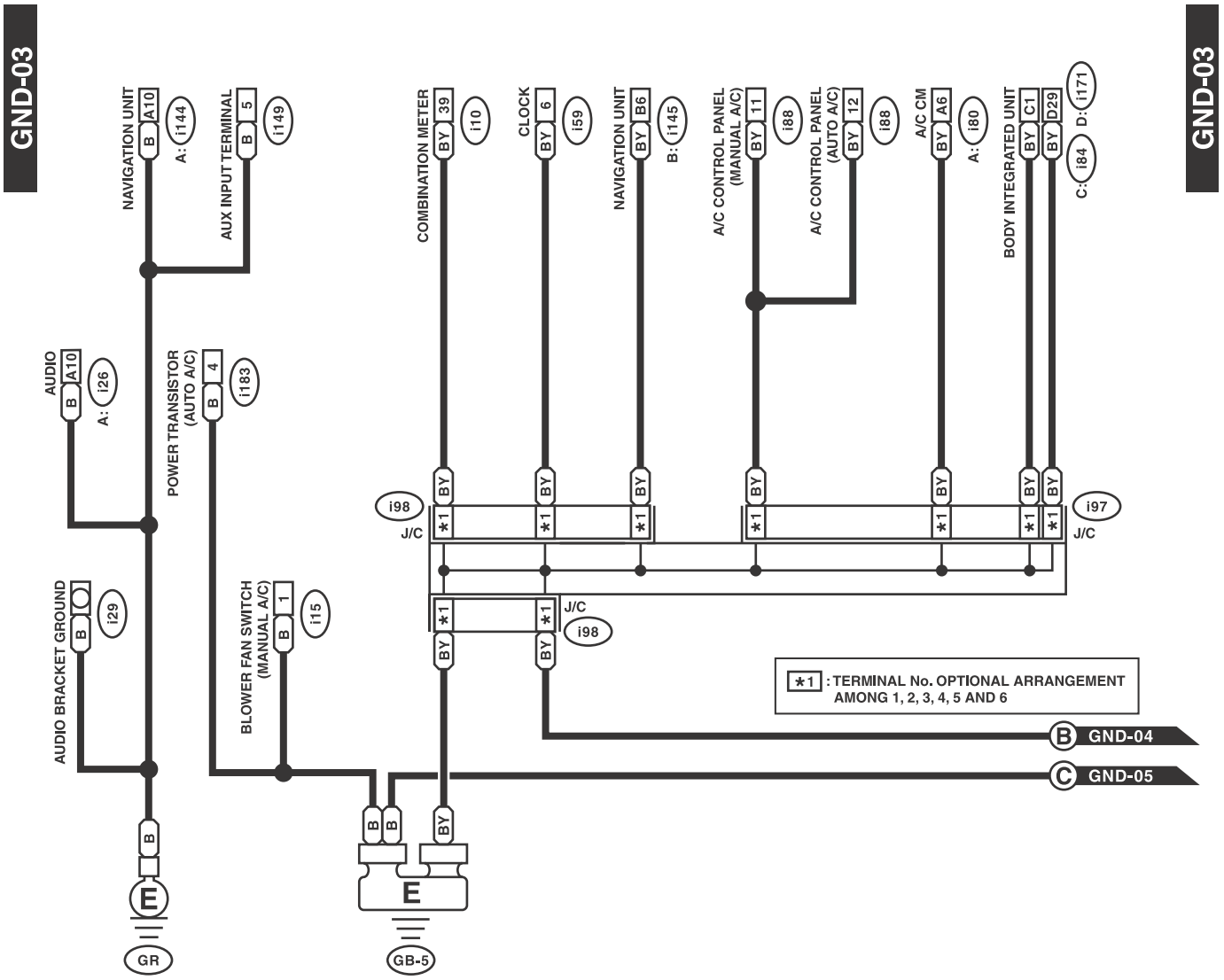
GND-03
GND-03
NAVIGATION UNIT
A10
A: i144
AUX INPUT TERMINAL
5
i149
COMBINATION METER
39
i10
CLOCK
6
i59
NAVIGATION UNIT
B6
B: i145
A/C CONTROL PANEL (MANUAL A/C)
11
i88
A/C CONTROL PANEL (AUTO A/C)
12
i88
A/C CM
A6
A: i80
BODY INTEGRATED UNIT
C1
D29
D: i171
C: i84
AUDIO
A10
A: i26
POWER TRANSISTOR (AUTO A/C)
4
i183
i98
J/C
*1
BY
i97
J/C
J/C
i98
AUDIO BRACKET GROUND
i29
BLOWER FAN SWITCH (MANUAL A/C)
1
i15
*1 : TERMINAL No. OPTIONAL ARRANGEMENT AMONG 1, 2, 3, 4, 5 AND 6
B GND-04
C GND-05
E
GR
GB-5

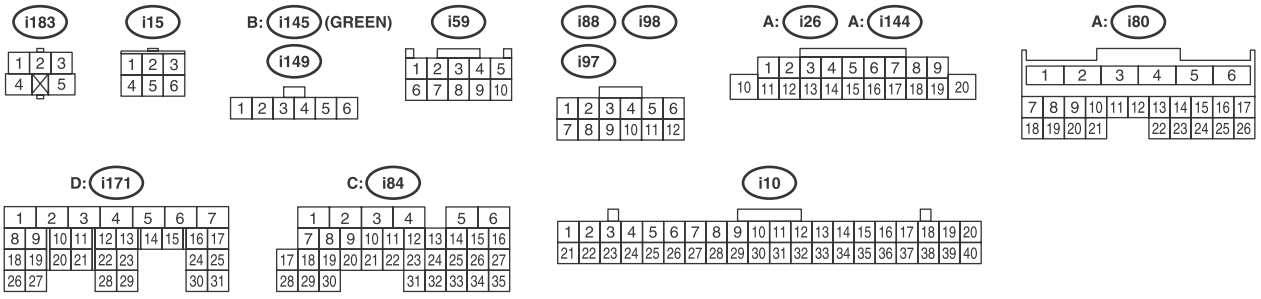
i183
i15
B: i145 (GREEN)
i149
i59
i88
i98
i97
A: i26
A: i144
A: i80
D: i171
C: i84
i10

WI-25401

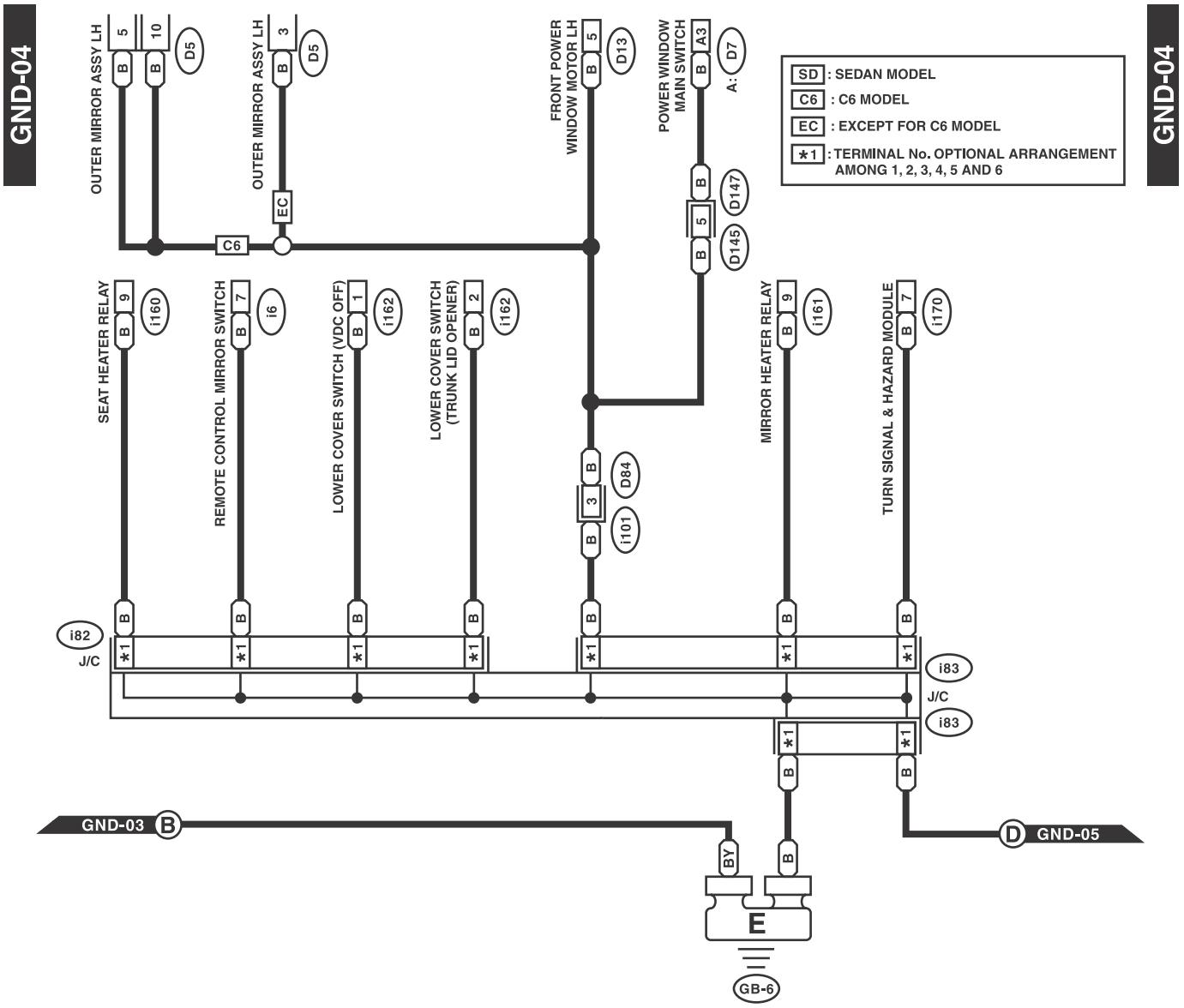
GND-04
GND-04
OUTER MIRROR ASSY LH
OUTER MIRROR ASSY LH
FRONT POWER WINDOW MOTOR LH
POWER WINDOW MAIN SWITCH
SD : SEDAN MODEL
C6 : C6 MODEL
EC : EXCEPT FOR C6 MODEL
*1 : TERMINAL No. OPTIONAL ARRANGEMENT AMONG 1, 2, 3, 4, 5 AND 6
C6
EC
SEAT HEATER RELAY
REMOTE CONTROL MIRROR SWITCH
LOWER COVER SWITCH (VDC OFF)
LOWER COVER SWITCH (TRUNK LID OPENER)
MIRROR HEATER RELAY
TURN SIGNAL & HAZARD MODULE
i82
J/C
i83
J/C
i83
GND-03 B
D GND-05
E
GB-6

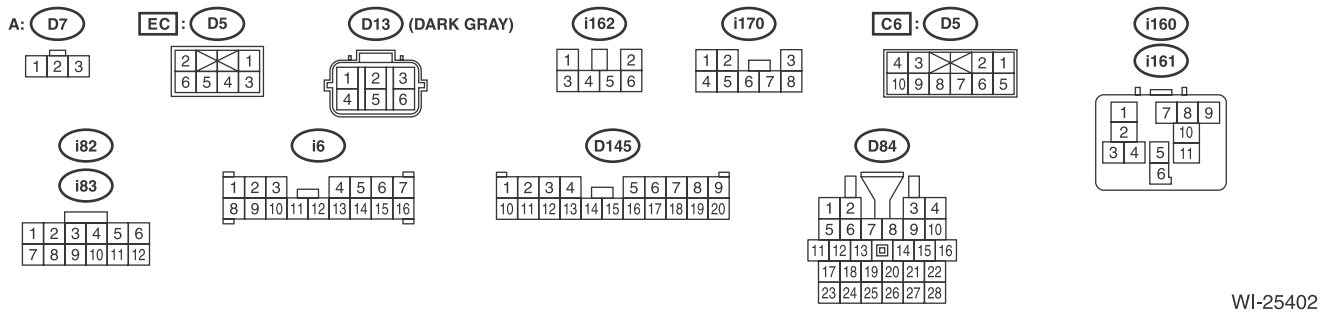
A: D7
EC : D5
D13 (DARK GRAY)
i162
i170
C6 : D5
i160
i161
i82
i83
i6
D145
D84

WI-25402

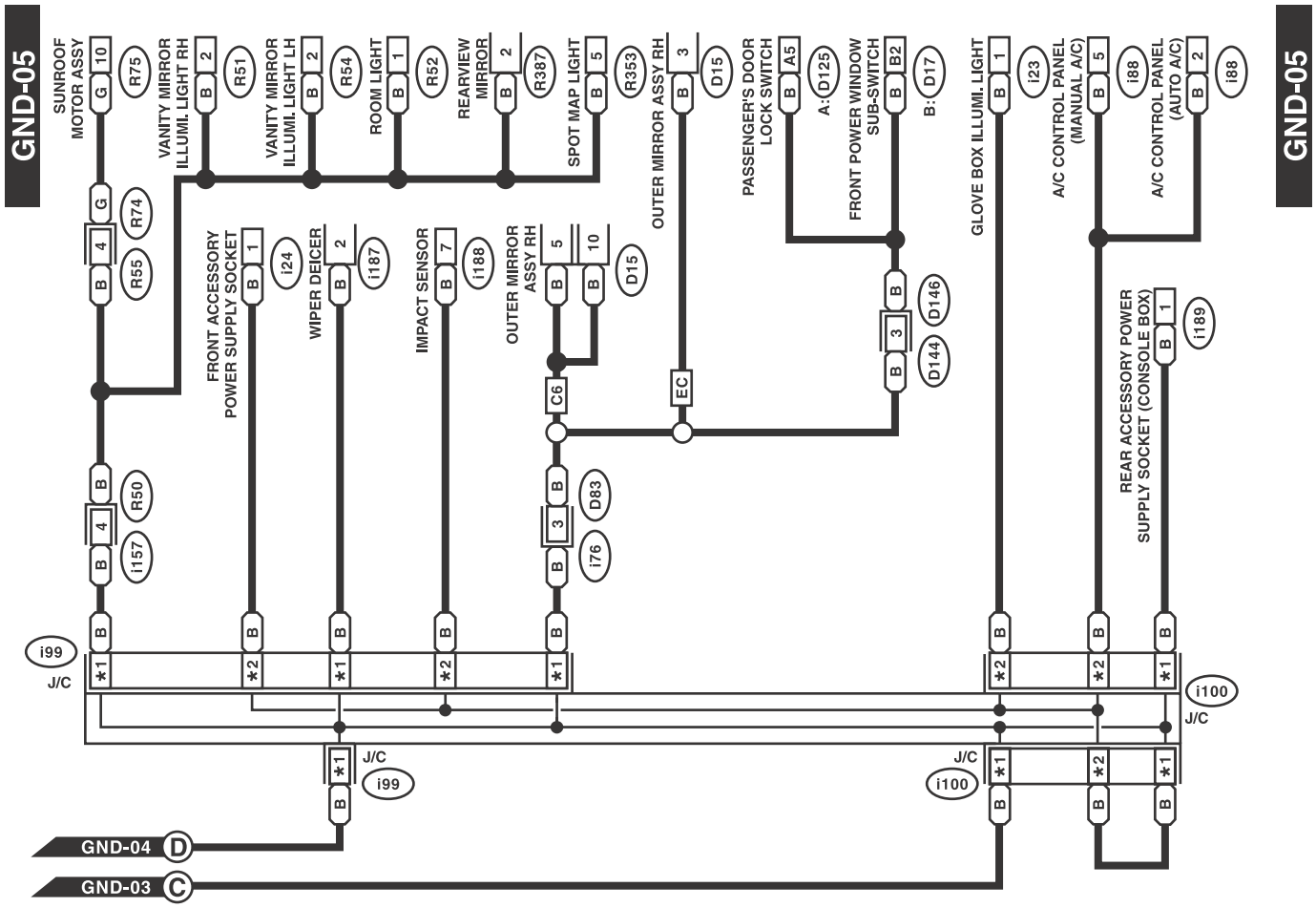
GND-05
GND-05
SUNROOF MOTOR ASSY
VANITY MIRROR ILLUMI. LIGHT RH
VANITY MIRROR ILLUMI. LIGHT LH
ROOM LIGHT
REARVIEW MIRROR
SPOT MAP LIGHT
OUTER MIRROR ASSY RH
PASSENGER'S DOOR LOCK SWITCH
FRONT POWER WINDOW SUB-SWITCH
GLOVE BOX ILLUMI. LIGHT
A/C CONTROL PANEL (MANUAL A/C)
A/C CONTROL PANEL (AUTO A/C)
FRONT ACCESSORY POWER SUPPLY SOCKET
WIPER DEICER
IMPACT SENSOR
OUTER MIRROR ASSY RH
REAR ACCESSORY POWER SUPPLY SOCKET (CONSOLE BOX)
J/C
GND-04
GND-03
C6 : C6 MODEL
EC : EXCEPT FOR C6 MODEL
*1 : TERMINAL No. OPTIONAL ARRANGEMENT AMONG 1, 2, 3, 4, 5 AND 6
*2 : TERMINAL No. OPTIONAL ARRANGEMENT AMONG 7, 8, 9, 10, 11 AND 12

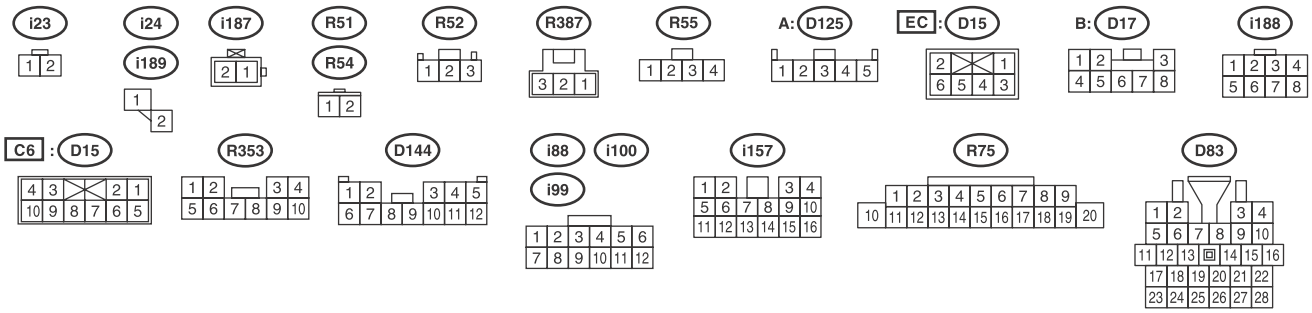
i23
i24
i189
i187
R51
R54
R52
R387
R55
A: D125
EC : D15
B: D17
i188
C6 : D15
R353
D144
i88
i100
i99
i157
R75
D83

WI-25403

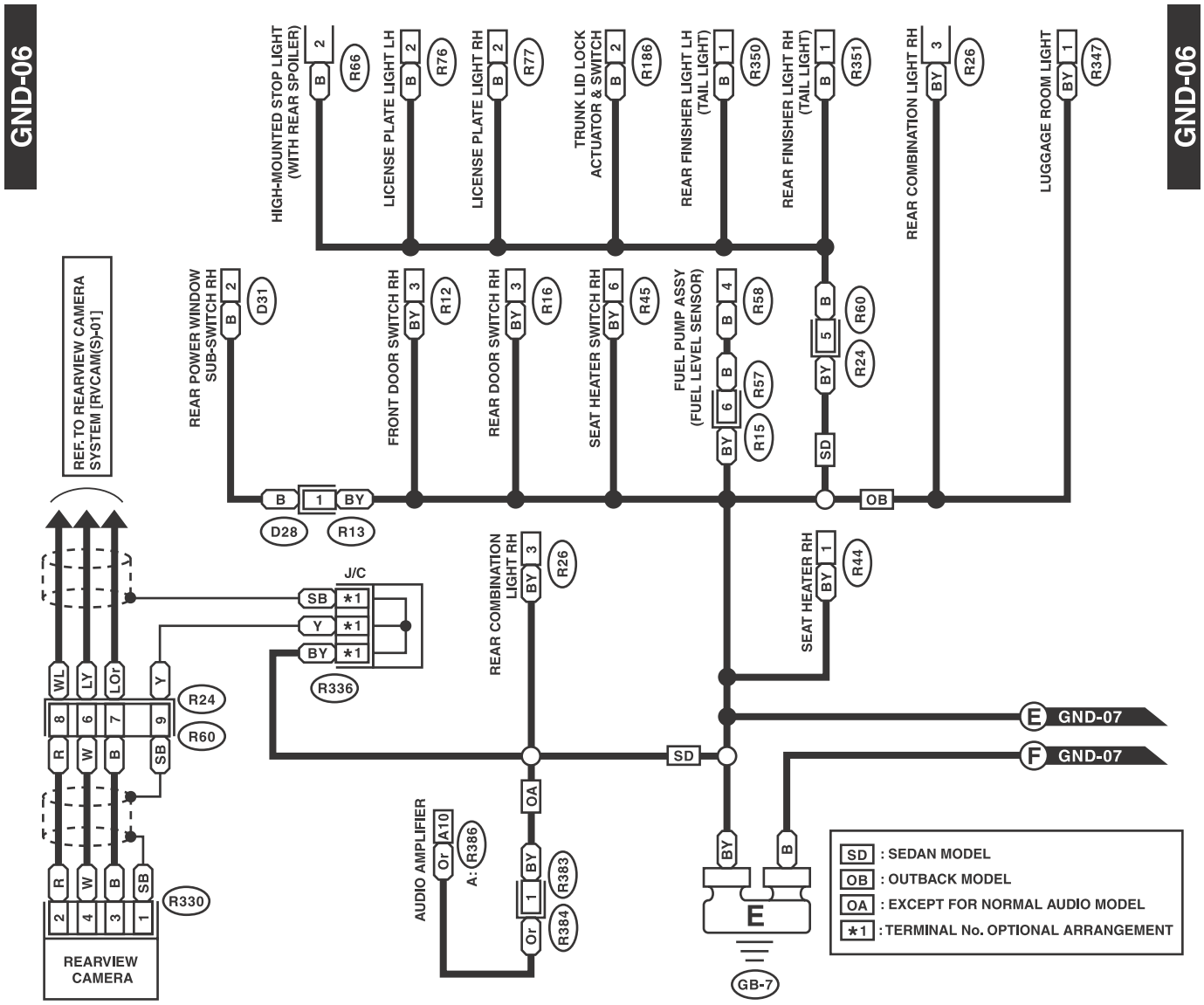
GND-06
GND-06
HIGH-MOUNTED STOP LIGHT (WITH REAR SPOILER)
LICENSE PLATE LIGHT LH
LICENSE PLATE LIGHT RH
TRUNK LID LOCK ACTUATOR & SWITCH
REAR FINISHER LIGHT LH (TAIL LIGHT)
REAR FINISHER LIGHT RH (TAIL LIGHT)
REAR COMBINATION LIGHT RH
LUGGAGE ROOM LIGHT
REAR POWER WINDOW SUB-SWITCH RH
FRONT DOOR SWITCH RH
REAR DOOR SWITCH RH
SEAT HEATER SWITCH RH
FUEL PUMP ASSY (FUEL LEVEL SENSOR)
REF. TO REARVIEW CAMERA SYSTEM [RVCAM(S)-01]
J/C
REAR COMBINATION LIGHT RH
SEAT HEATER RH
AUDIO AMPLIFIER
REARVIEW CAMERA
E GND-07
F GND-07
GB-7
SD : SEDAN MODEL
OB : OUTBACK MODEL
OA : EXCEPT FOR NORMAL AUDIO MODEL
*1 : TERMINAL No. OPTIONAL ARRANGEMENT
R45 (BROWN)
A: R386
SD : R26
OB : R26

WI-25404

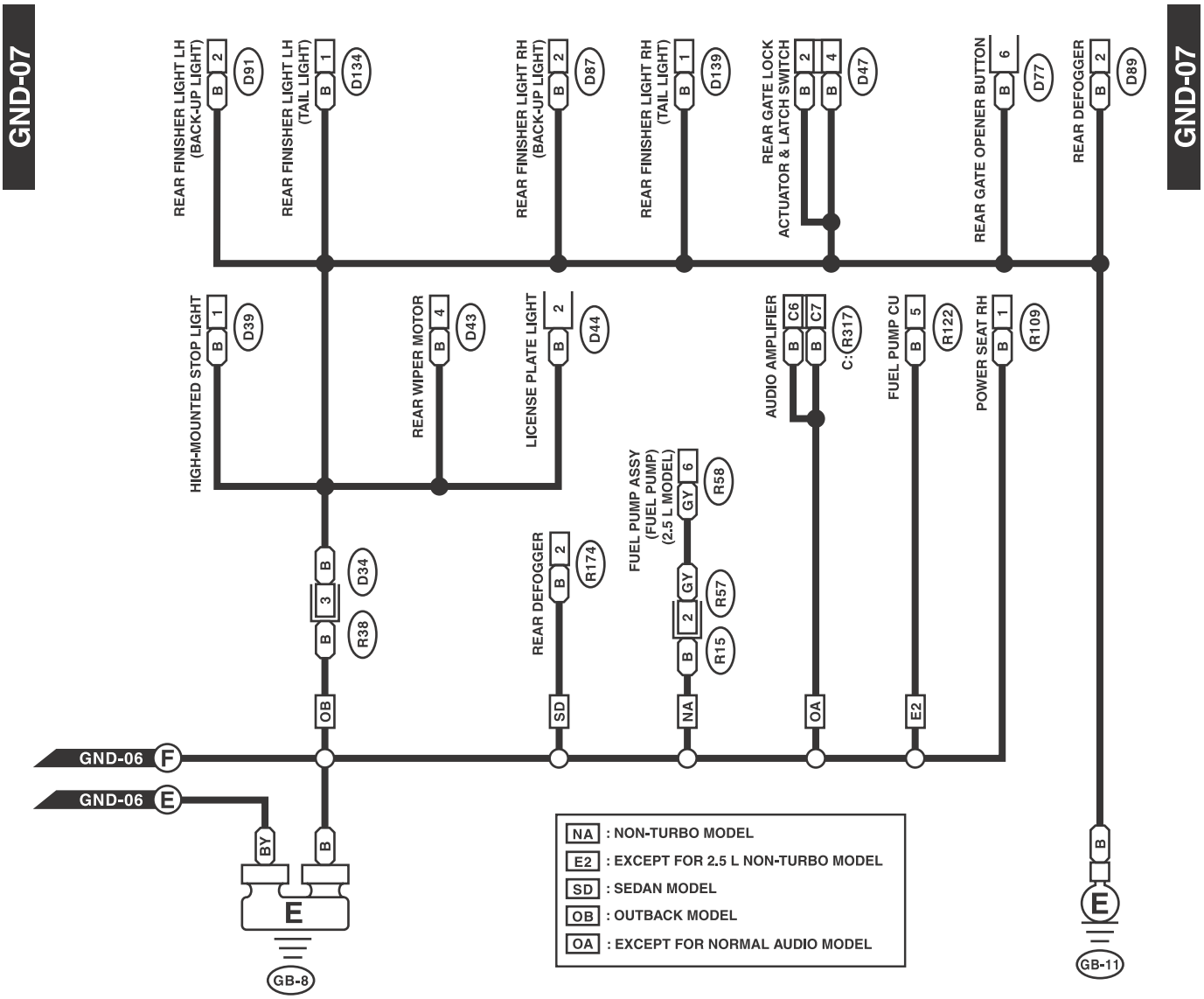
GND-07
GND-07
REAR FINISHER LIGHT LH (BACK-UP LIGHT)
REAR FINISHER LIGHT LH (TAIL LIGHT)
REAR FINISHER LIGHT RH (BACK-UP LIGHT)
REAR FINISHER LIGHT RH (TAIL LIGHT)
REAR GATE LOCK ACTUATOR & LATCH SWITCH
REAR GATE OPENER BUTTON
REAR DEFOGGER
HIGH-MOUNTED STOP LIGHT
REAR WIPER MOTOR
LICENSE PLATE LIGHT
AUDIO AMPLIFIER
C: R317
FUEL PUMP CU
POWER SEAT RH
FUEL PUMP ASSY (FUEL PUMP) (2.5 L MODEL)
REAR DEFOGGER
GND-06 F
GND-06 E
GB-8
GB-11
NA : NON-TURBO MODEL
E2 : EXCEPT FOR 2.5 L NON-TURBO MODEL
SD : SEDAN MODEL
OB : OUTBACK MODEL
OA : EXCEPT FOR NORMAL AUDIO MODEL

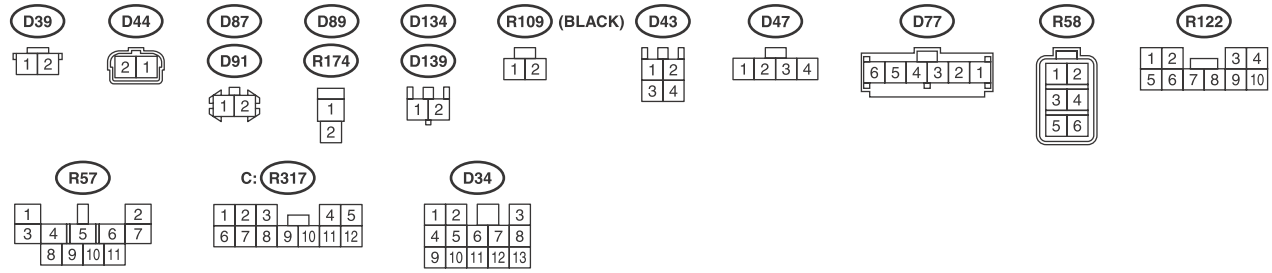
D39
D44
D87
D91
D89
R174
D134
D139
R109 (BLACK)
D43
D47
D77
R58
R122
R57
C: R317
D34

WI-25405

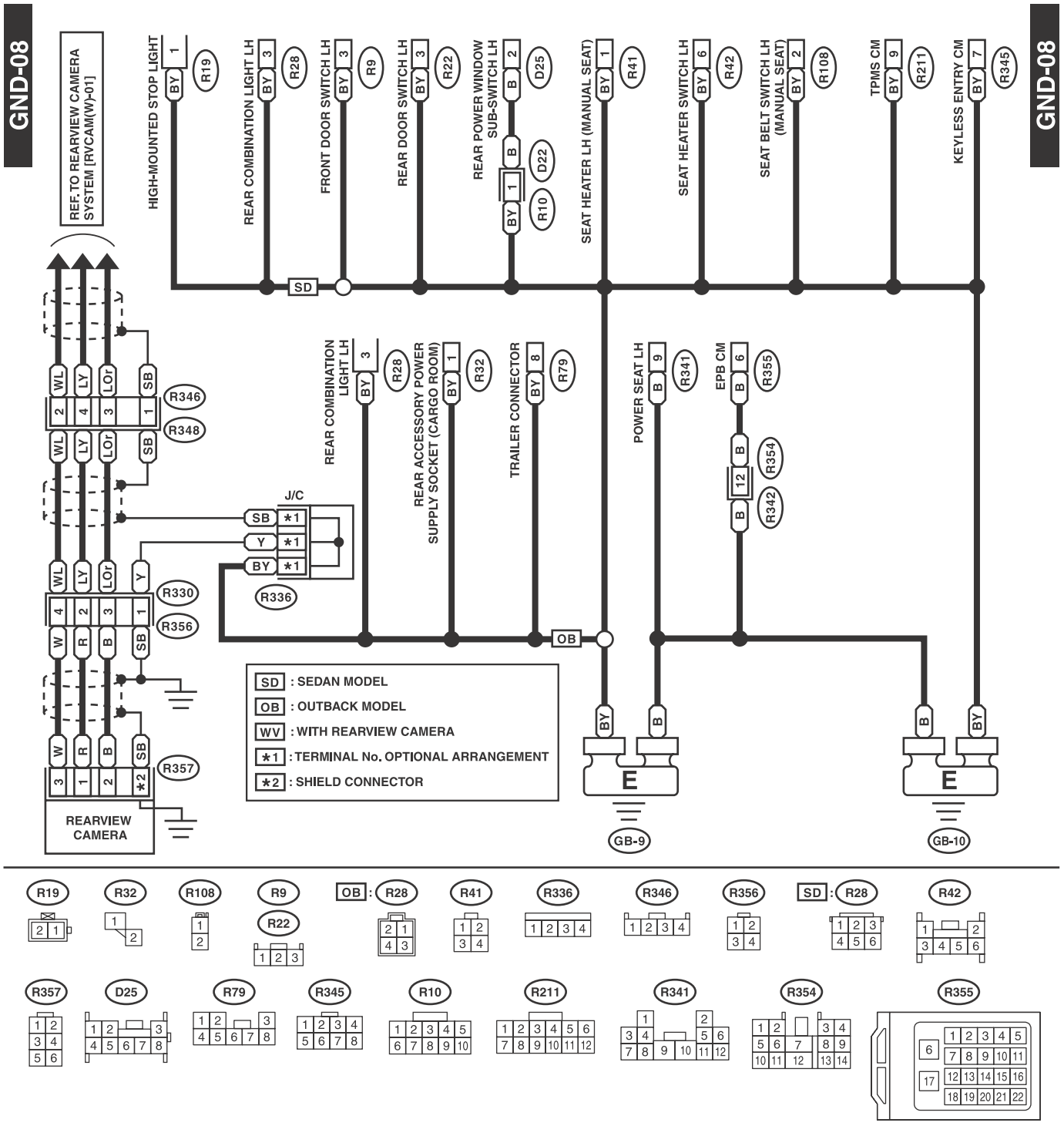
GND-08
GND-08
REF. TO REARVIEW CAMERA SYSTEM [RVCAM(W)-01]
HIGH-MOUNTED STOP LIGHT
REAR COMBINATION LIGHT LH
FRONT DOOR SWITCH LH
REAR DOOR SWITCH LH
REAR POWER WINDOW SUB-SWITCH LH
SEAT HEATER LH (MANUAL SEAT)
SEAT HEATER SWITCH LH
SEAT BELT SWITCH LH (MANUAL SEAT)
TPMS CM
KEYLESS ENTRY CM
SD
REAR COMBINATION LIGHT LH
REAR ACCESSORY POWER SUPPLY SOCKET (CARGO ROOM)
TRAILER CONNECTOR
POWER SEAT LH
EPB CM
J/C
OB
REARVIEW CAMERA
SD : SEDAN MODEL
OB : OUTBACK MODEL
WV : WITH REARVIEW CAMERA
*1 : TERMINAL No. OPTIONAL ARRANGEMENT
*2 : SHIELD CONNECTOR
GB-9
GB-10

WI-25406

2. ENGINE GROUND (2.5 L NON-TURBO MODEL)

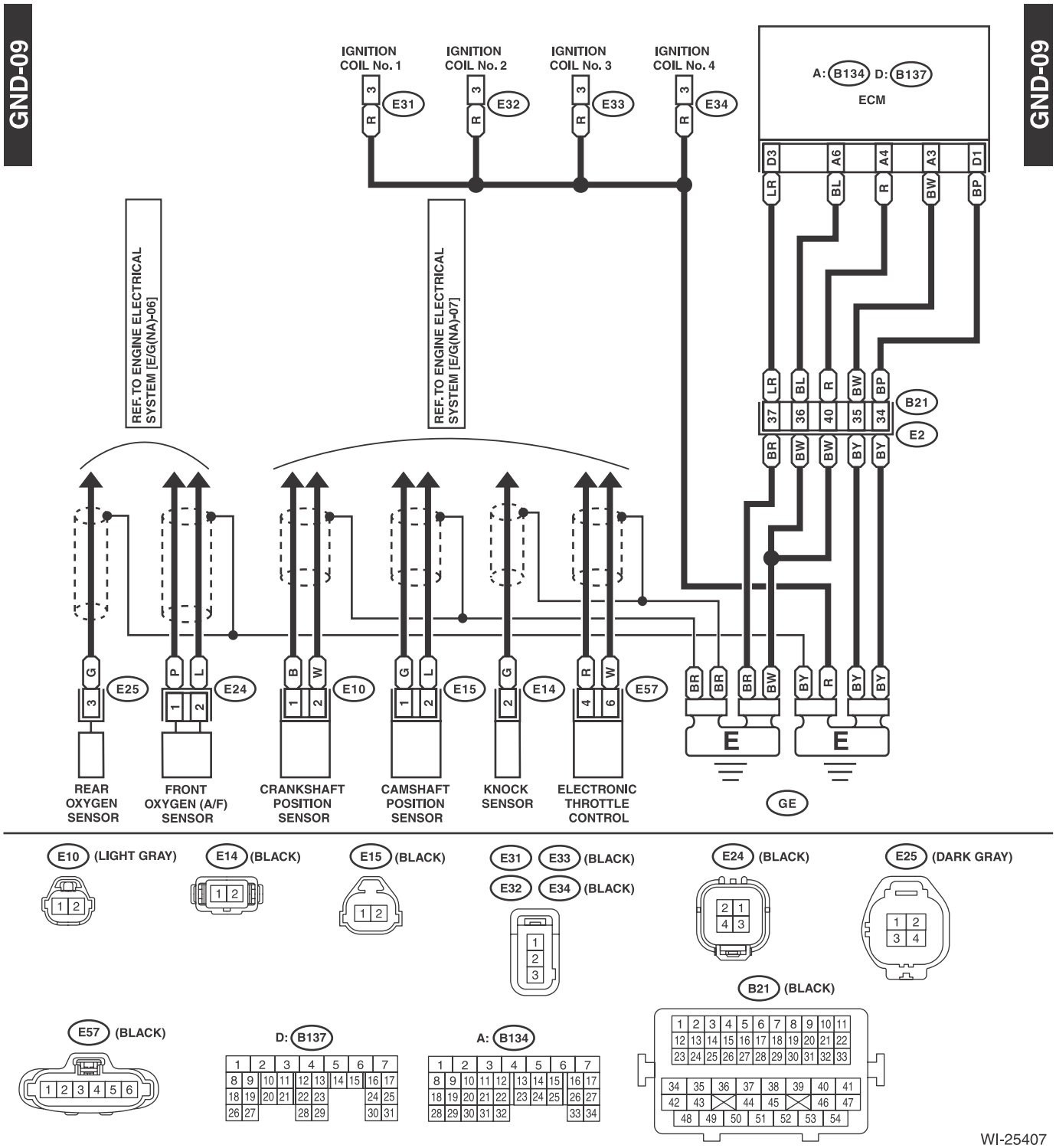

3. ENGINE GROUND (2.5 L TURBO MODEL)

GND-10

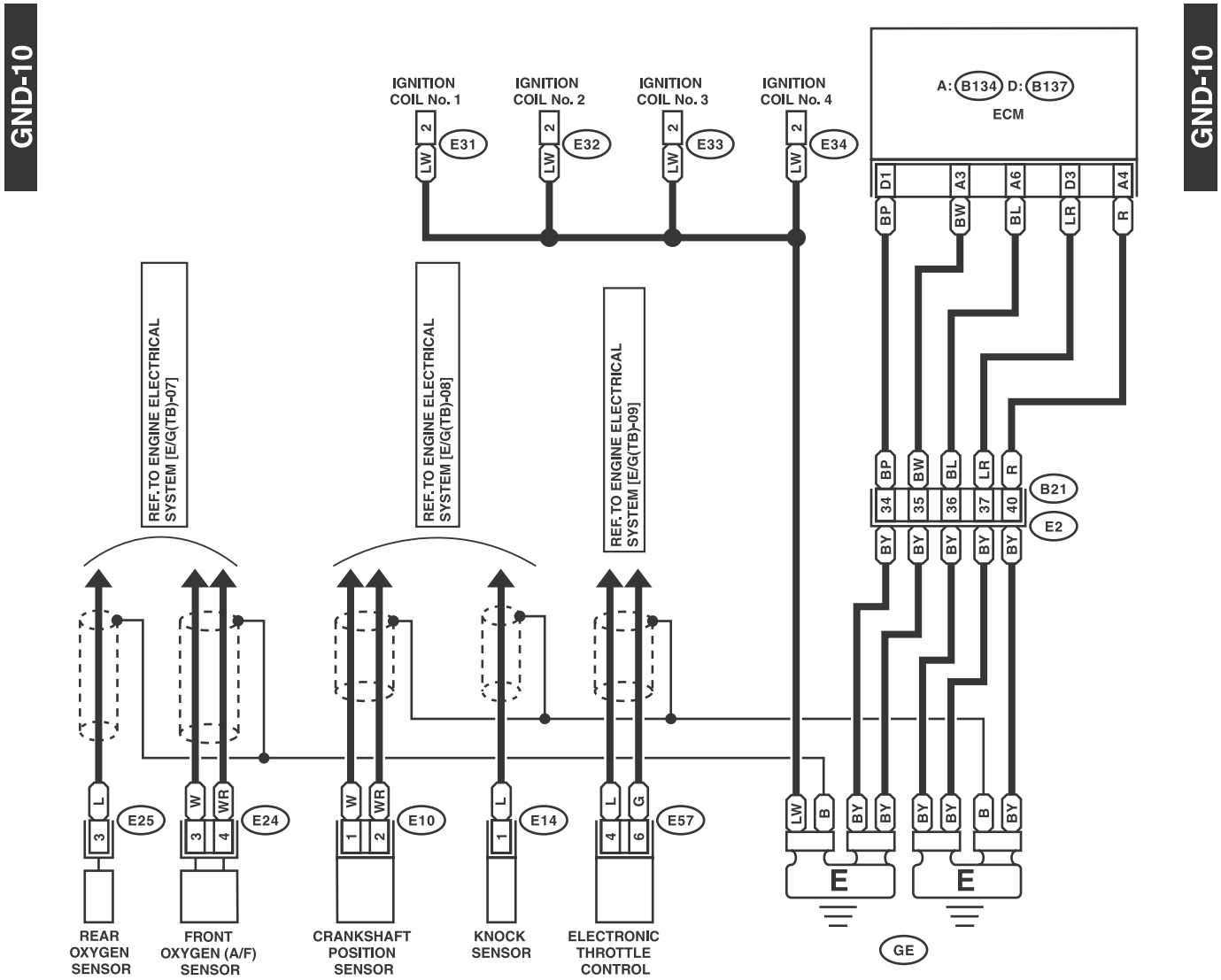

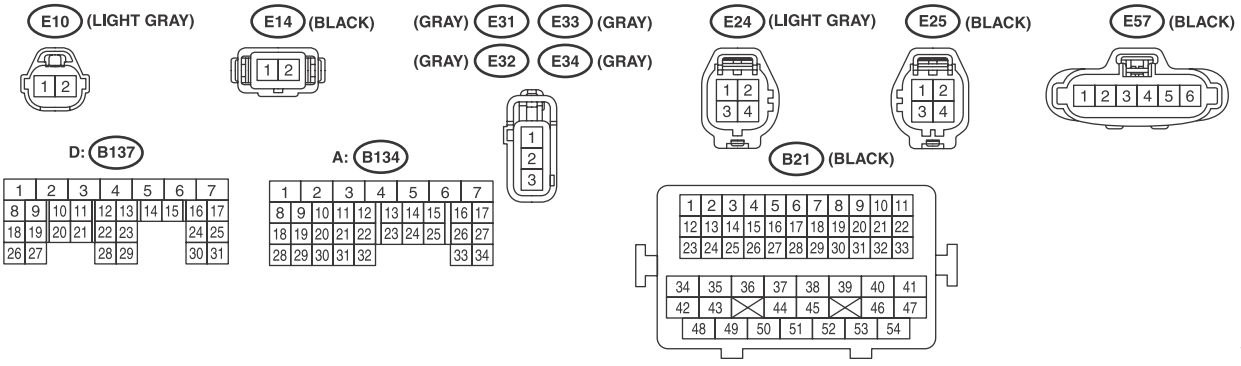

WI-25408

4. ENGINE GROUND (3.6 L MODEL)

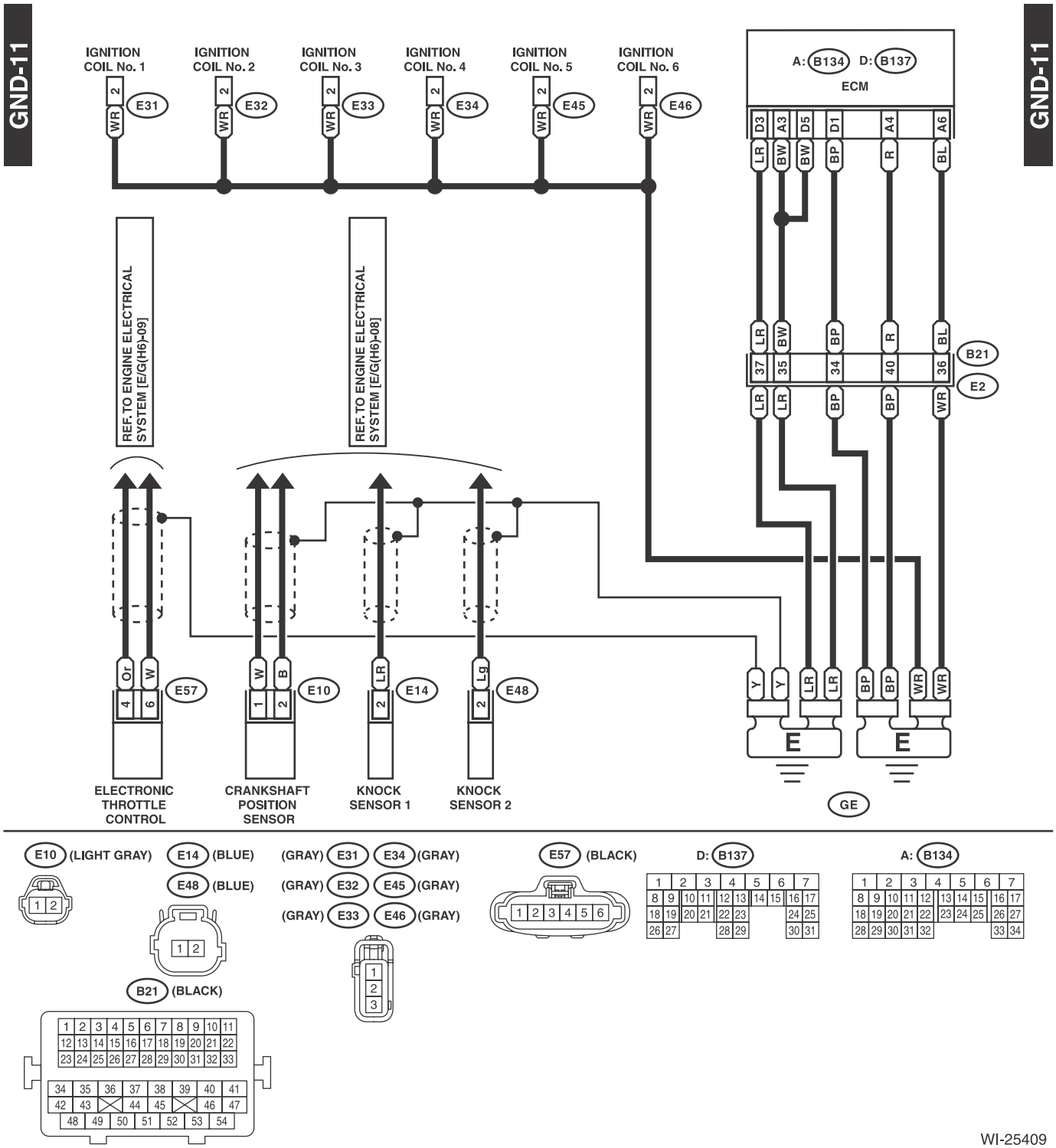

WI-25409

5. TRANSMISSION GROUND (AT MODEL)

GND-12

GND-12

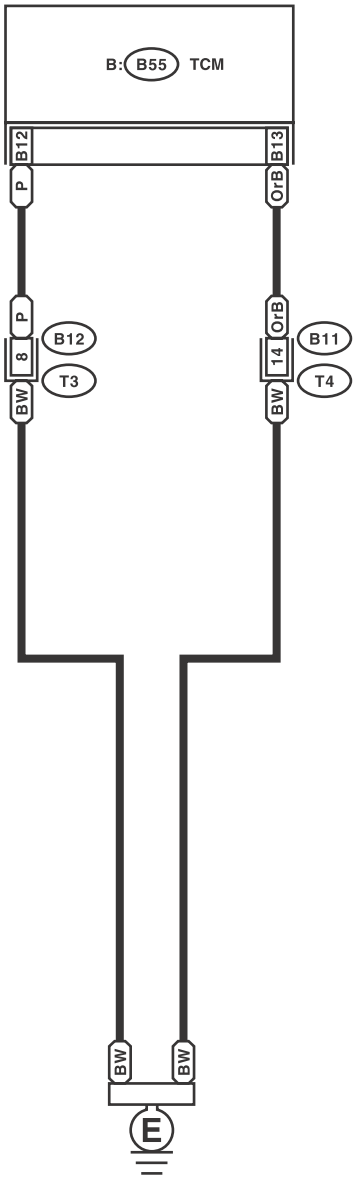

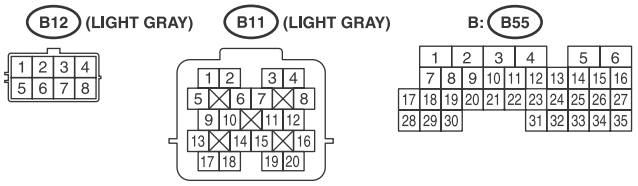

WI-25410

6. TRANSMISSION GROUND (CVT MODEL)

GND-13

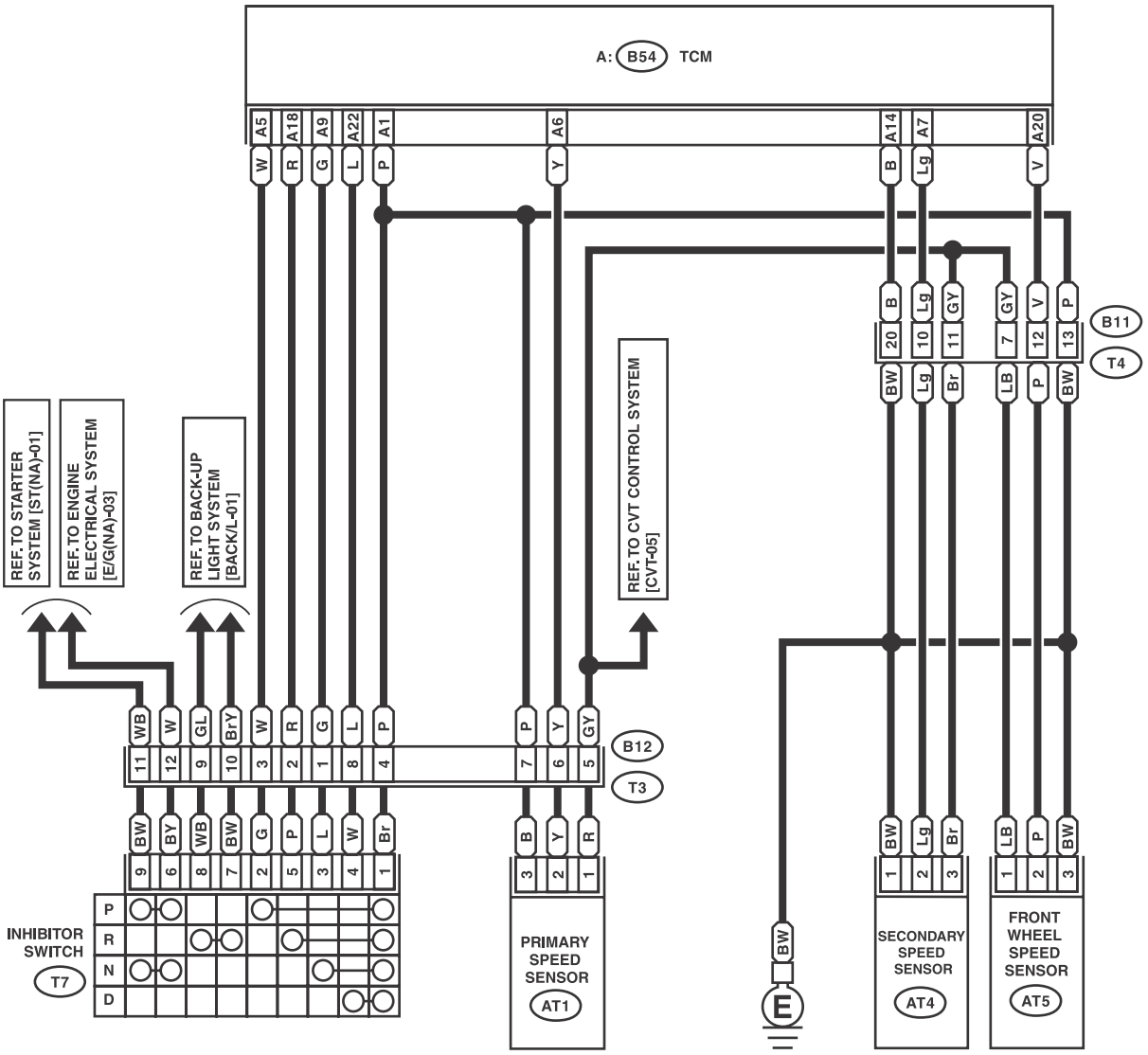

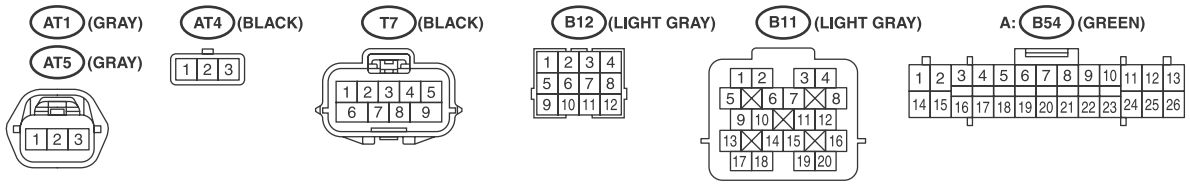

WI-25411

5. Airbag System

A: WIRING DIAGRAM

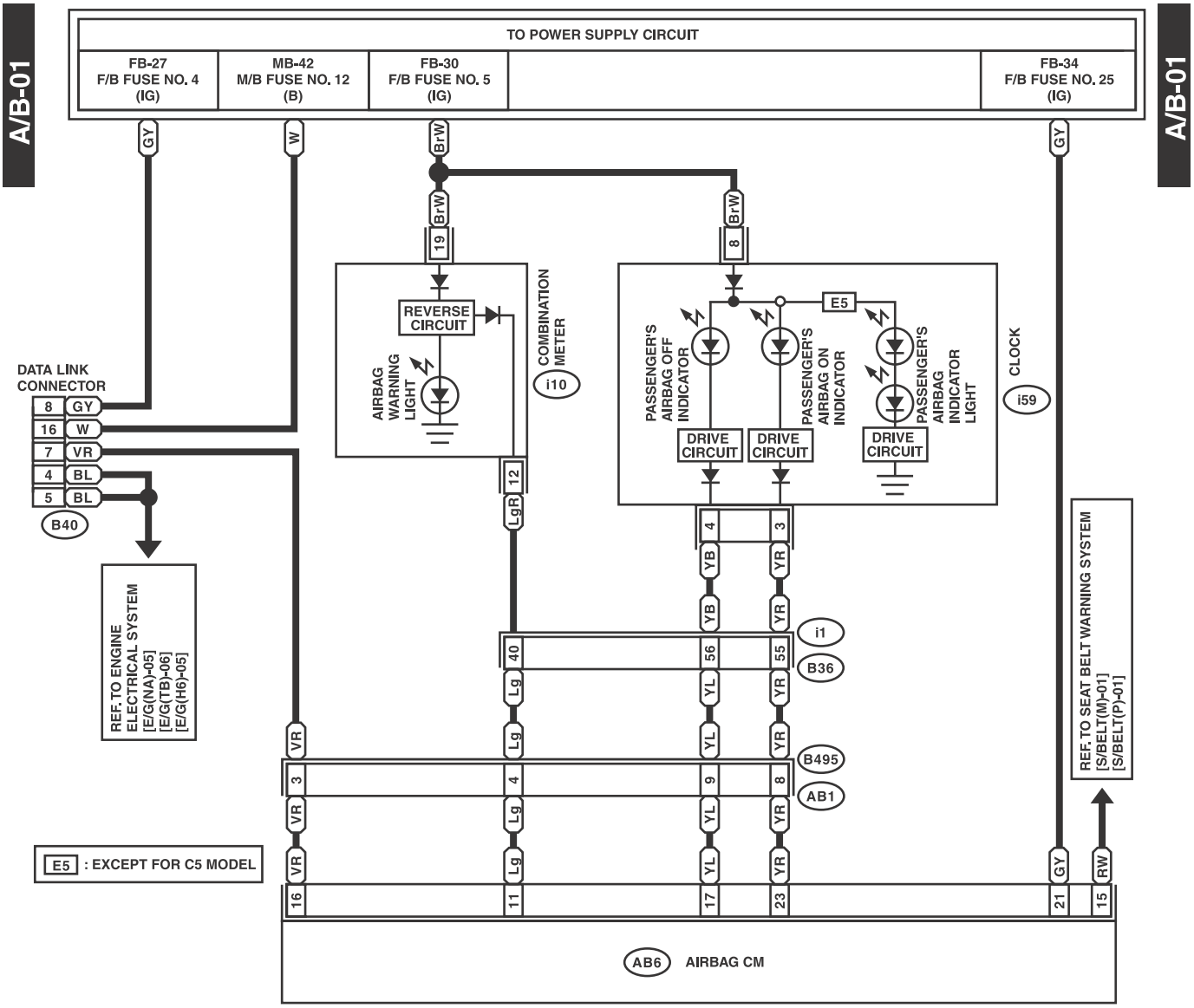

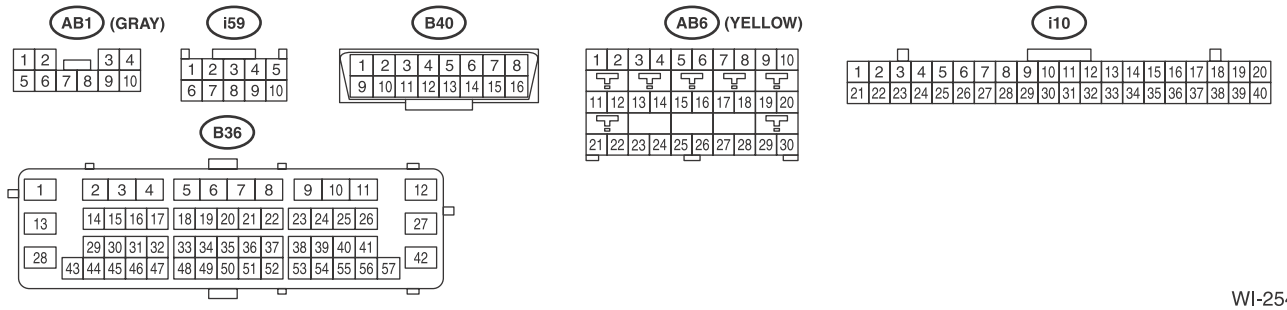

WI-25412

A/B-02

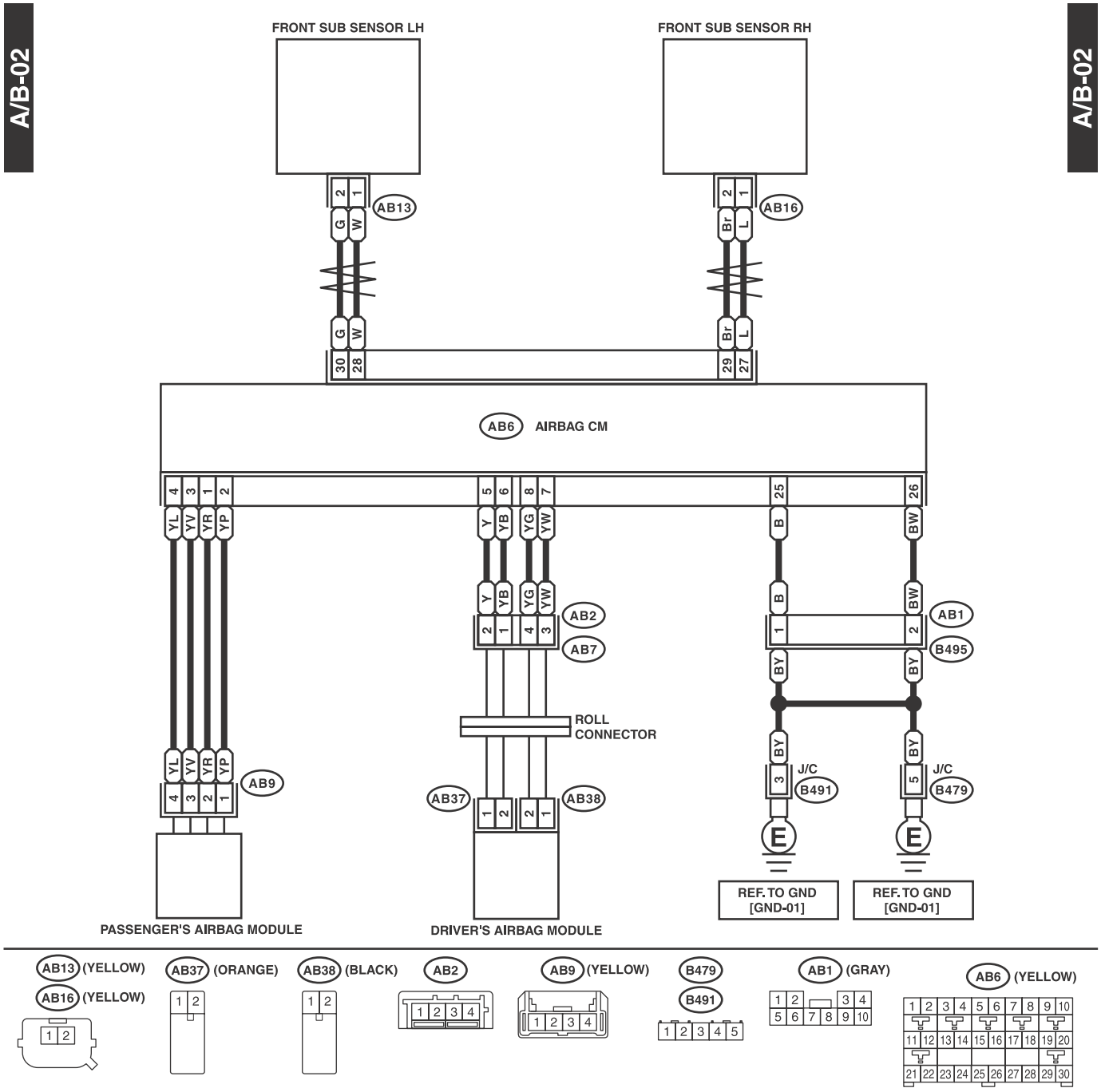

WI-25413

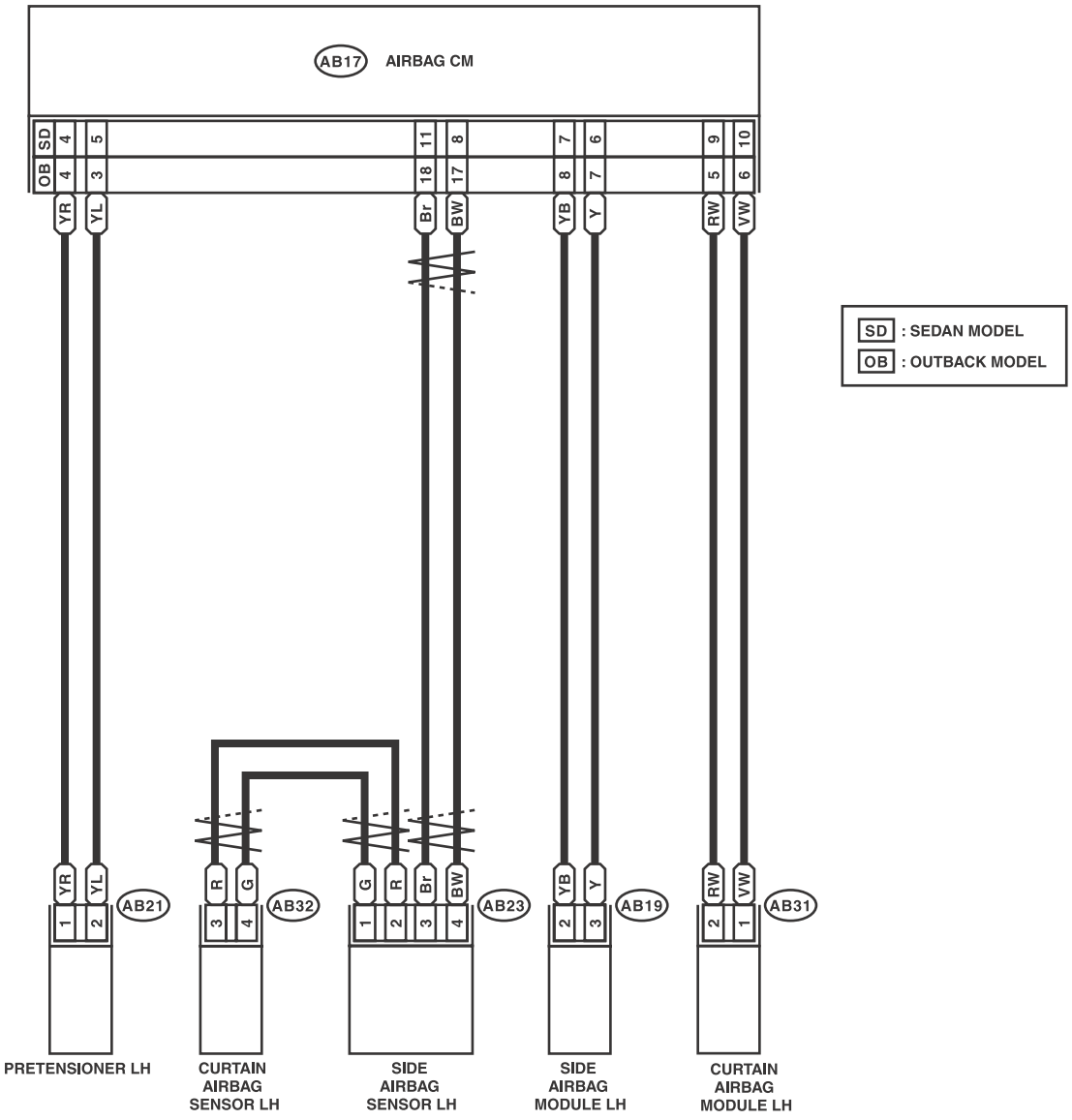
AB17 AIRBAG CM
SD 4 5
OB 4 3
11 8
18 17
7 6
8 7
9 10
5 6
YR YL Br BW YB Y RW VW
SD : SEDAN MODEL
OB : OUTBACK MODEL
AB21
AB32
AB23
AB19
AB31
PRETENSIONER LH
CURTAIN AIRBAG SENSOR LH
SIDE AIRBAG SENSOR LH
SIDE AIRBAG MODULE LH
CURTAIN AIRBAG MODULE LH

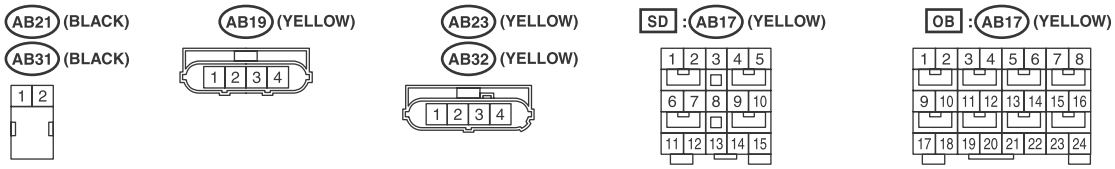
AB21 (BLACK)
AB31 (BLACK)
AB19 (YELLOW)
AB23 (YELLOW)
AB32 (YELLOW)
SD : AB17 (YELLOW)
OB : AB17 (YELLOW)

WI-25414

A/B-04

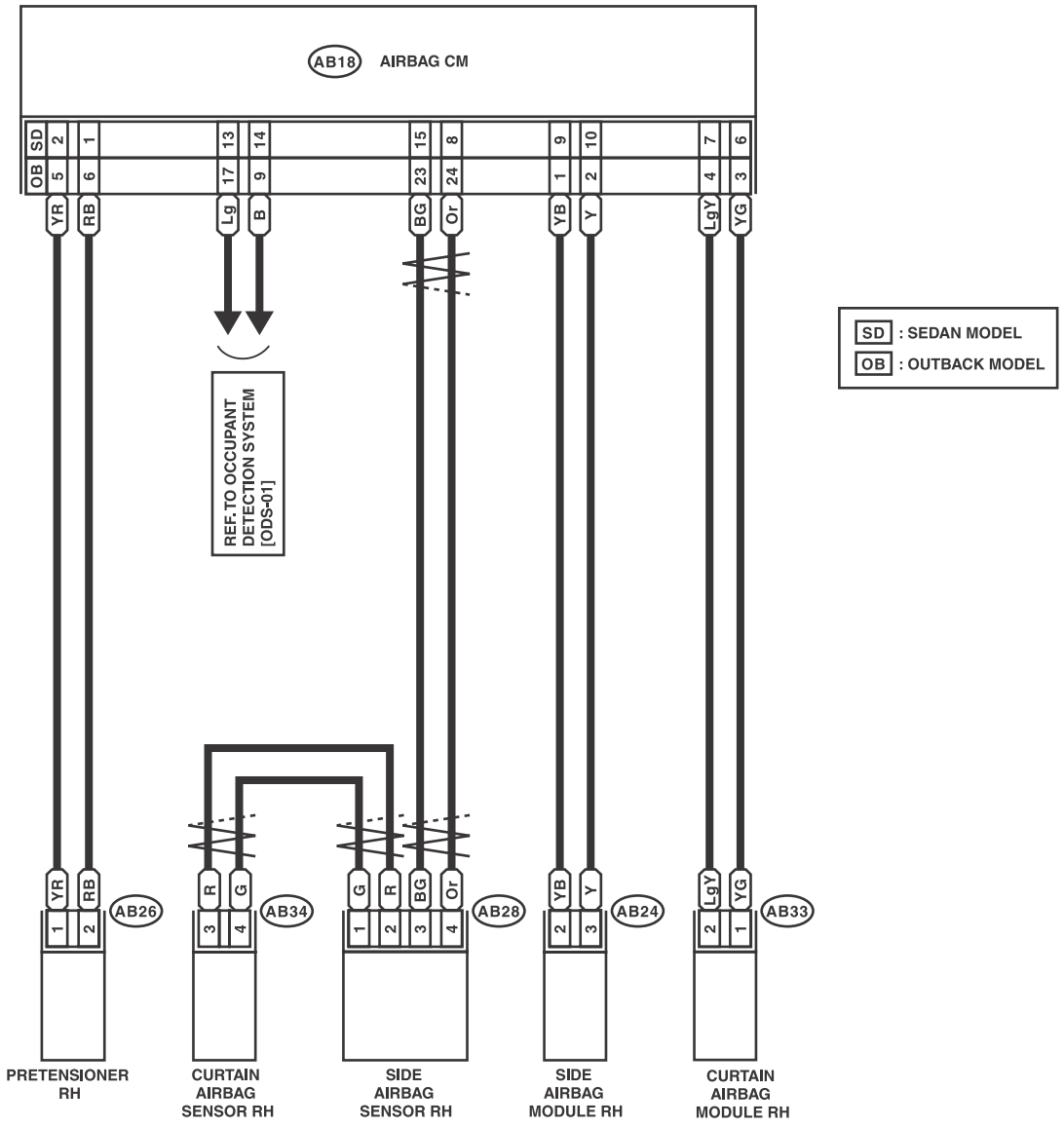

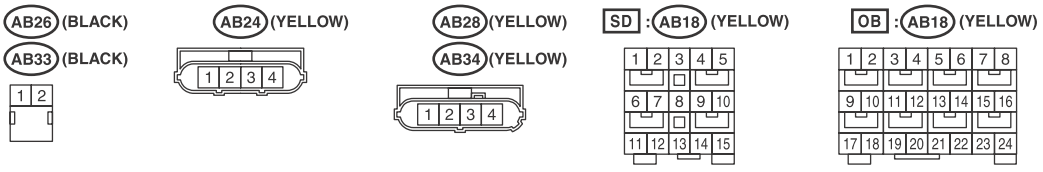

WI-25415

6. Air Conditioning System

A: WIRING DIAGRAM

1. MANUAL A/C

M-A/C-01

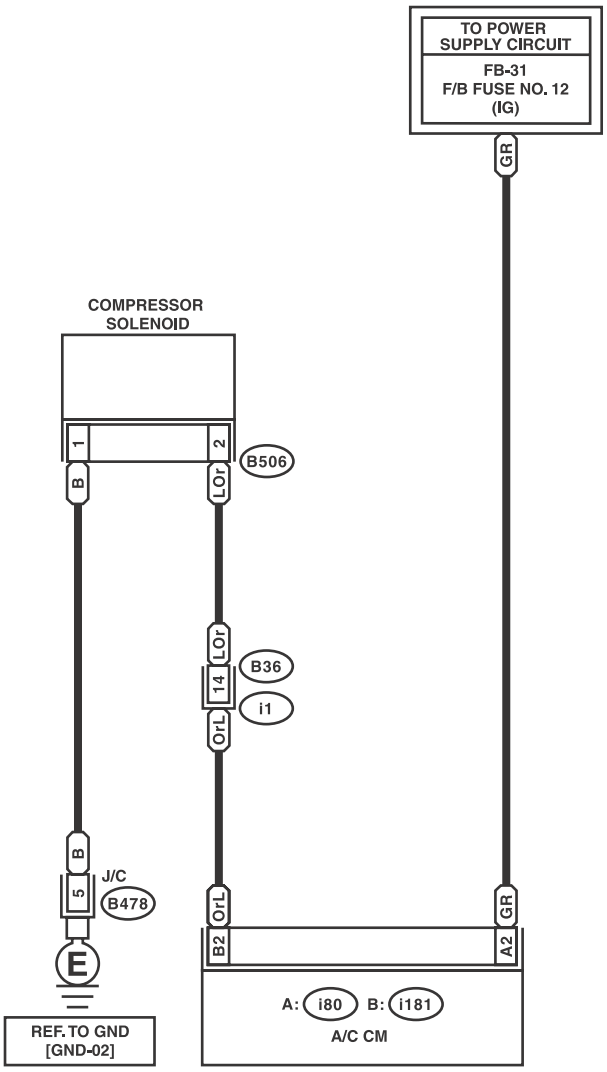

M-A/C-01

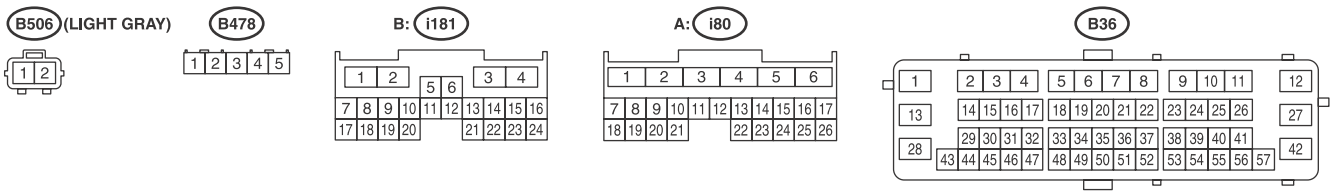

WI-25416

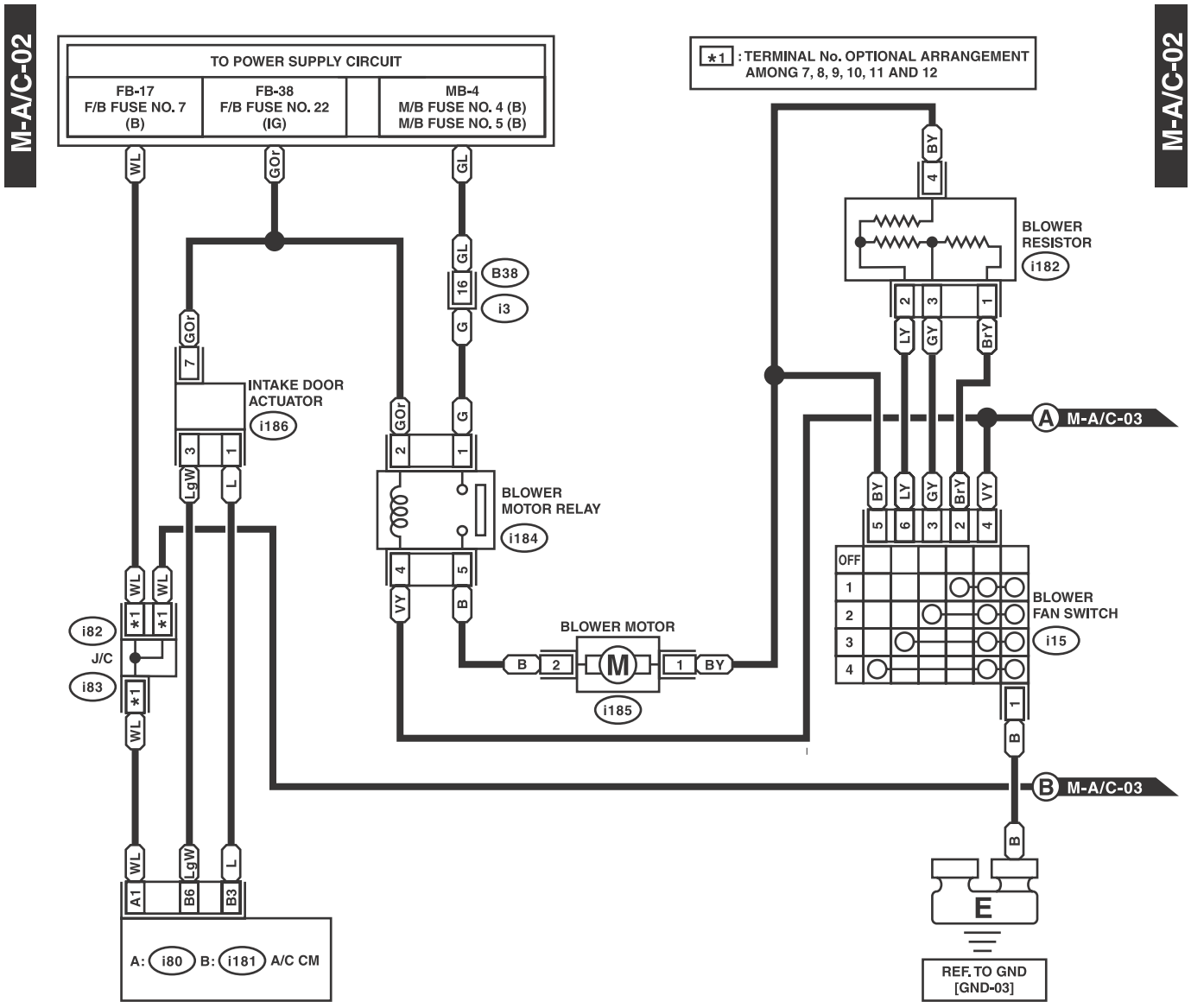
M-A/C-02
M-A/C-02
TO POWER SUPPLY CIRCUIT
FB-17
F/B FUSE NO. 7
(B)
FB-38
F/B FUSE NO. 22
(IG)
MB-4
M/B FUSE NO. 4 (B)
M/B FUSE NO. 5 (B)
*1 : TERMINAL No. OPTIONAL ARRANGEMENT AMONG 7, 8, 9, 10, 11 AND 12
BLOWER RESISTOR
i182
B38
i3
INTAKE DOOR ACTUATOR
i186
BLOWER MOTOR RELAY
i184
BLOWER MOTOR
i185
BLOWER FAN SWITCH
i15
A M-A/C-03
B M-A/C-03
i82
J/C
i83
A: i80 B: i181 A/C CM
E
REF. TO GND [GND-03]

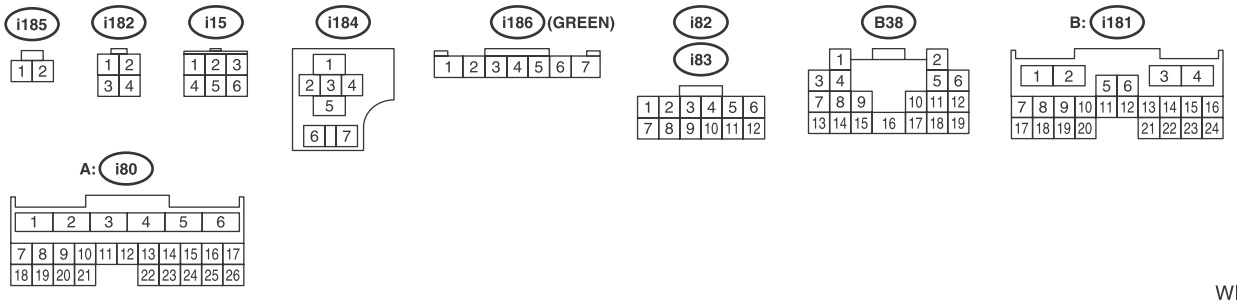
i185
i182
i15
i184
i186 (GREEN)
i82
i83
B38
B: i181
A: i80

WI-25417

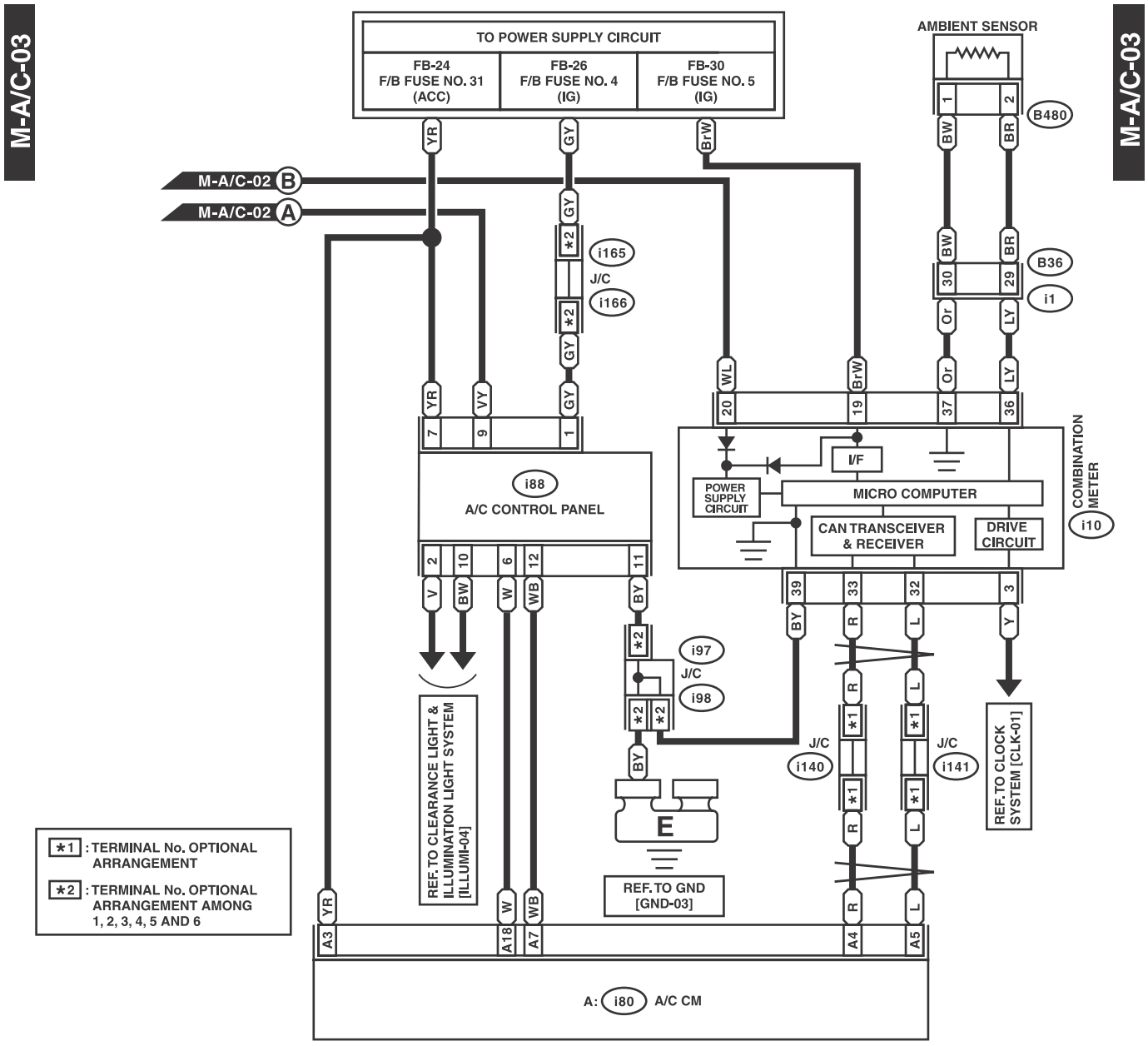
M-A/C-03
M-A/C-03
TO POWER SUPPLY CIRCUIT
FB-24
F/B FUSE NO. 31
(ACC)
FB-26
F/B FUSE NO. 4
(IG)
FB-30
F/B FUSE NO. 5
(IG)
AMBIENT SENSOR
B480
M-A/C-02 B
M-A/C-02 A
i165
J/C
i166
B36
i1
i88
A/C CONTROL PANEL
I/F
POWER SUPPLY CIRCUIT
MICRO COMPUTER
CAN TRANSCEIVER & RECEIVER
DRIVE CIRCUIT
COMBINATION METER
i10
i97
J/C
i98
i140
i141
REF. TO CLEARANCE LIGHT & ILLUMINATION LIGHT SYSTEM [ILLUMI-04]
REF. TO GND [GND-03]
REF. TO CLOCK SYSTEM [CLK-01]
*1 : TERMINAL No. OPTIONAL ARRANGEMENT
*2 : TERMINAL No. OPTIONAL ARRANGEMENT AMONG 1, 2, 3, 4, 5 AND 6
A: i80 A/C CM

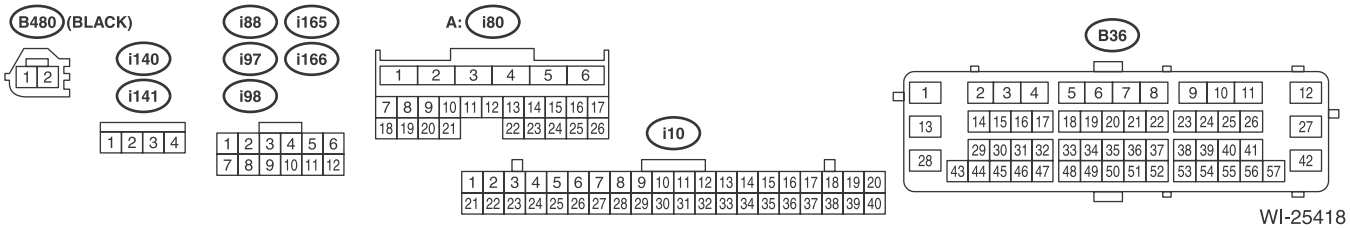
B480 (BLACK)
i140
i141
i88
i97
i98
i165
i166
A: i80
i10
B36

WI-25418

M-A/C-04

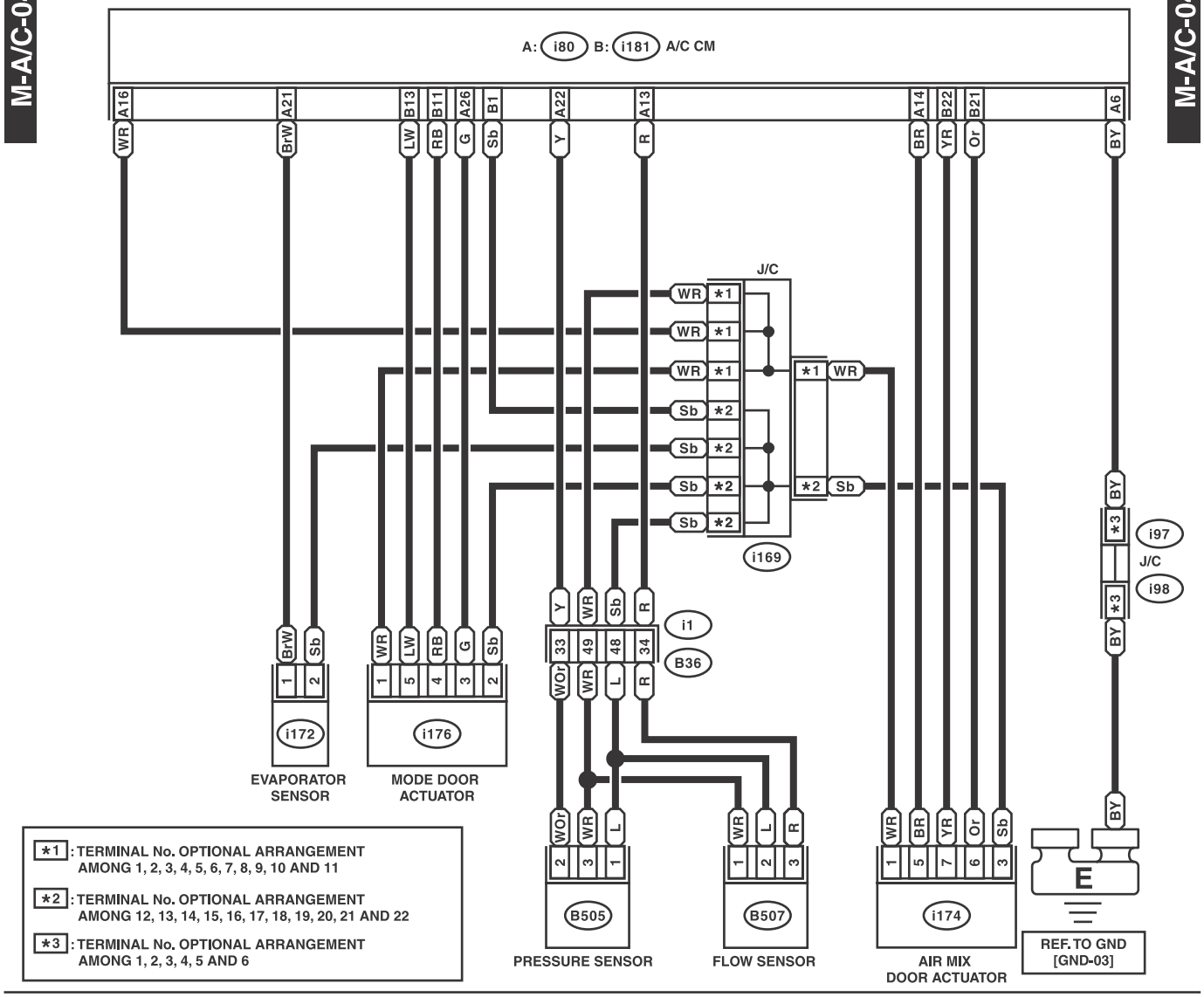

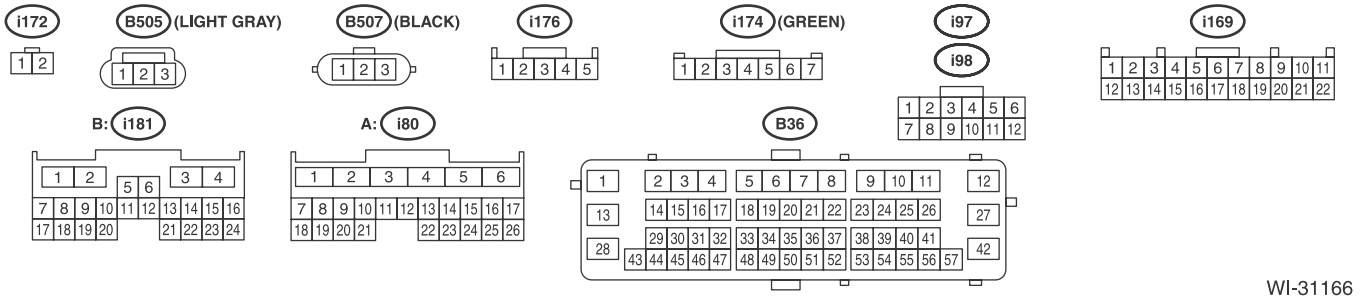

WI-31166

2. AUTO A/C

A-A/C-01

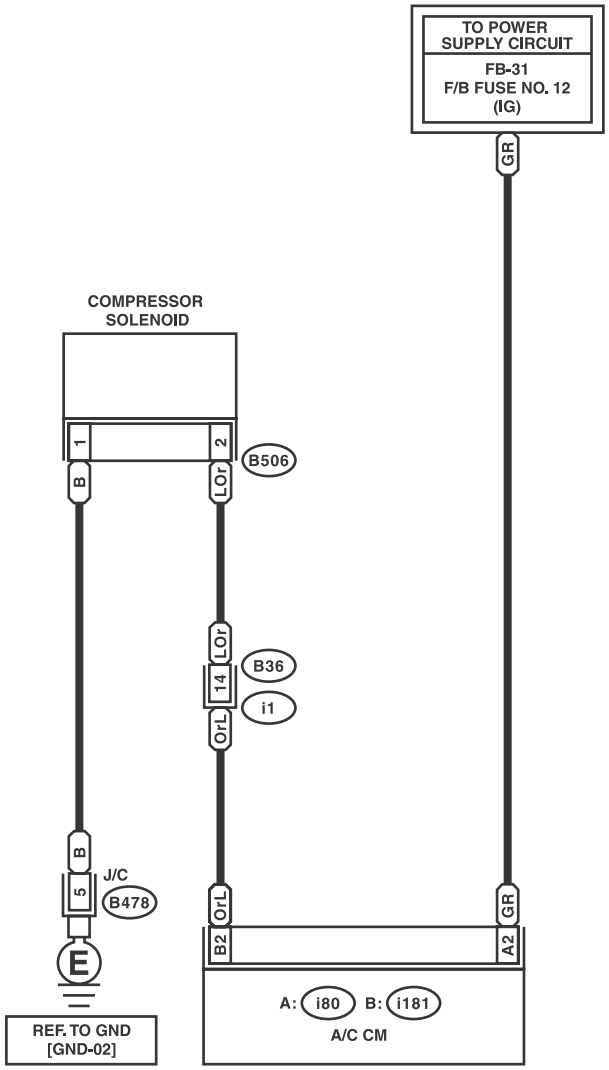

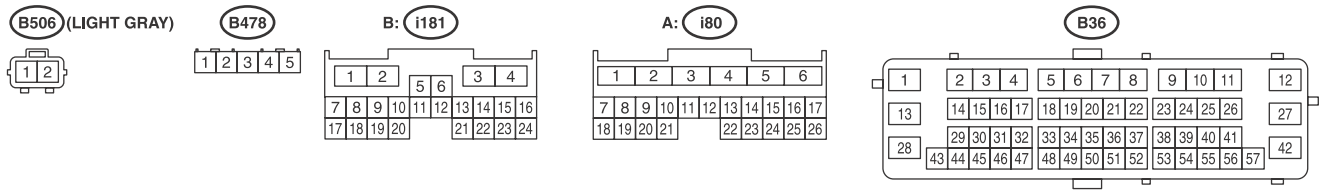

WI-25421

A-A/C-02

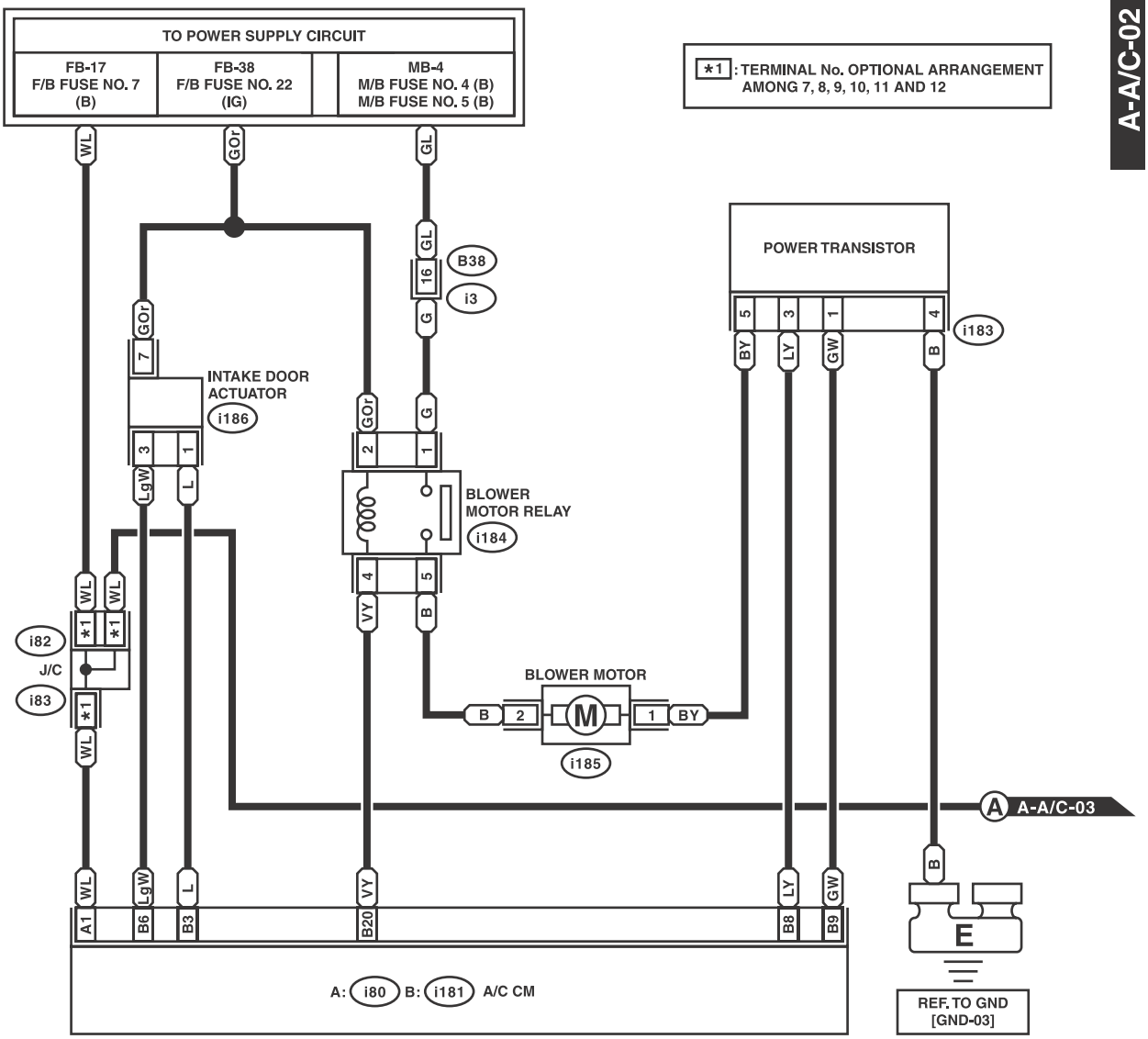

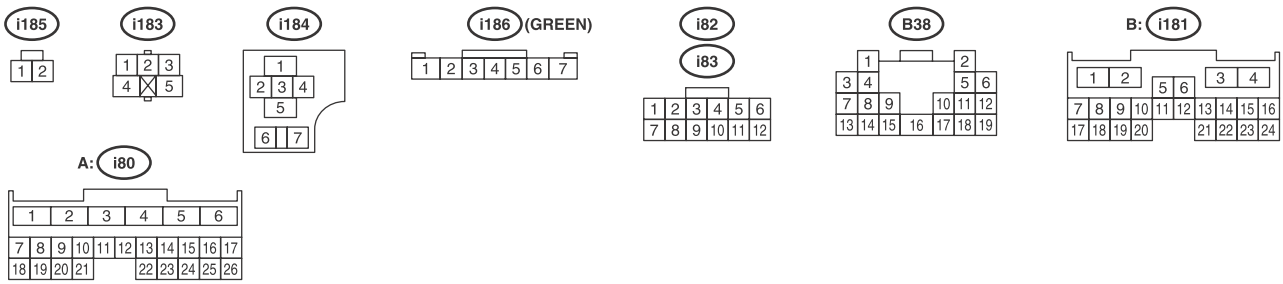

WI-25422

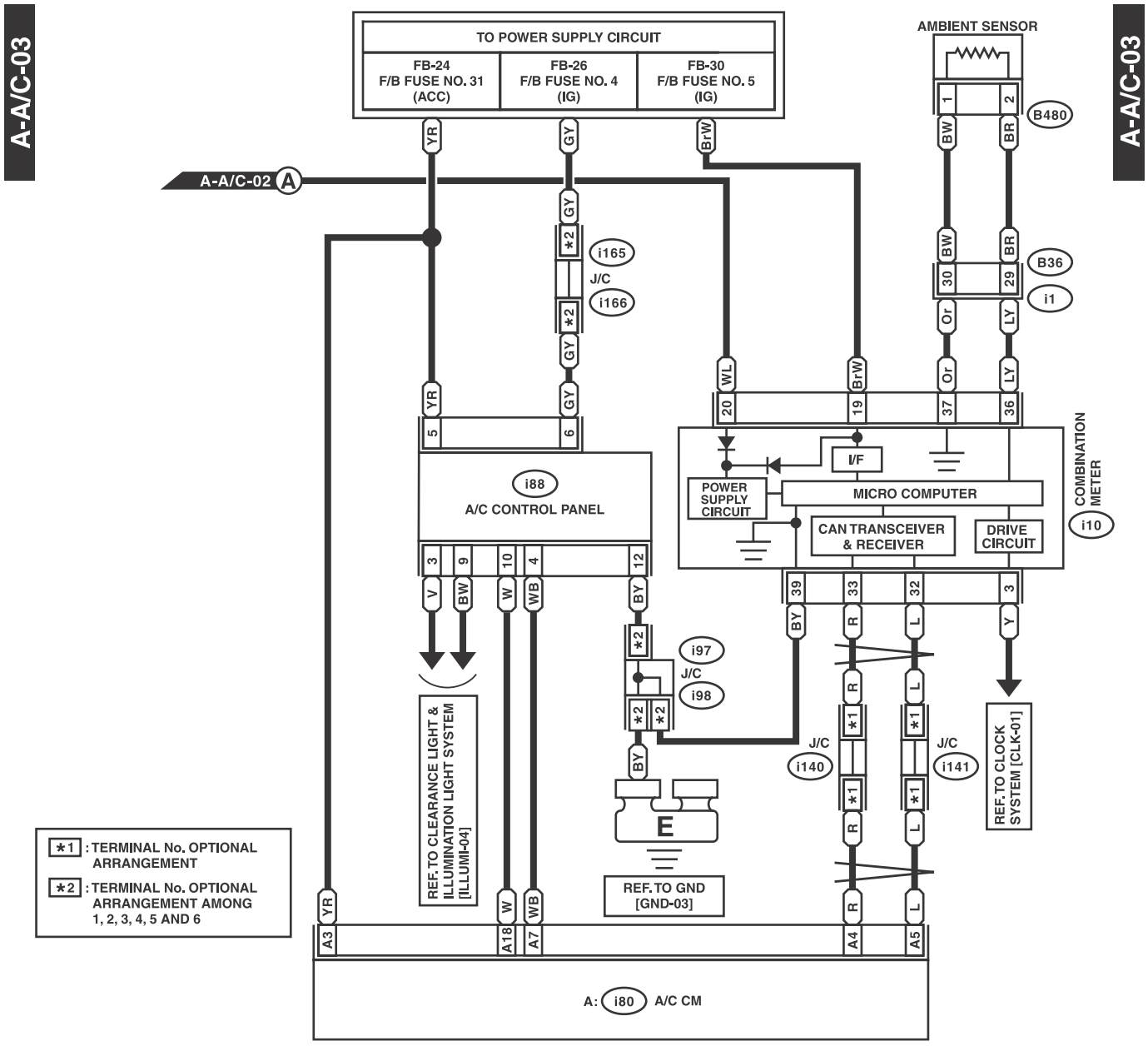
A-A/C-03
A-A/C-03
TO POWER SUPPLY CIRCUIT
FB-24
F/B FUSE NO. 31
(ACC)
FB-26
F/B FUSE NO. 4
(IG)
FB-30
F/B FUSE NO. 5
(IG)
AMBIENT SENSOR
B480
A-A/C-02 A
i165
J/C
i166
B36
i1
i88
A/C CONTROL PANEL
I/F
POWER SUPPLY CIRCUIT
MICRO COMPUTER
CAN TRANSCEIVER & RECEIVER
DRIVE CIRCUIT
COMBINATION METER
i10
i97
J/C
i98
J/C
i140
J/C
i141
REF. TO CLEARANCE LIGHT & ILLUMINATION LIGHT SYSTEM [ILLUMI-04]
REF. TO GND [GND-03]
REF. TO CLOCK SYSTEM [CLK-01]
*1 : TERMINAL No. OPTIONAL ARRANGEMENT
*2 : TERMINAL No. OPTIONAL ARRANGEMENT AMONG 1, 2, 3, 4, 5 AND 6
A: i80 A/C CM

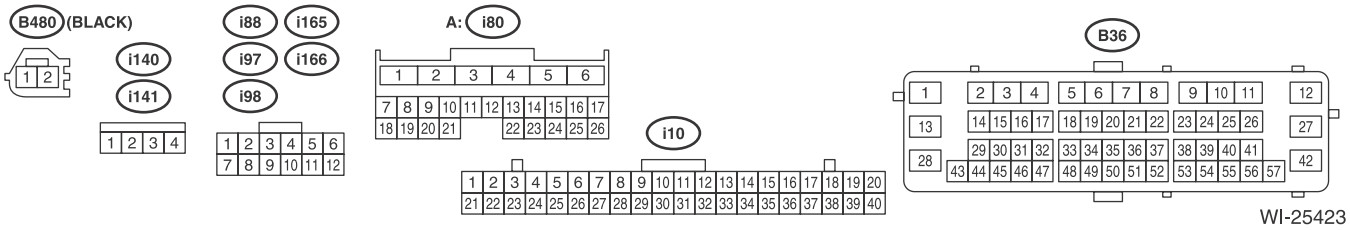
B480 (BLACK)
i140
i141
i88
i97
i98
i165
i166
A: i80
i10
B36
WI-25423

A-A/C-04

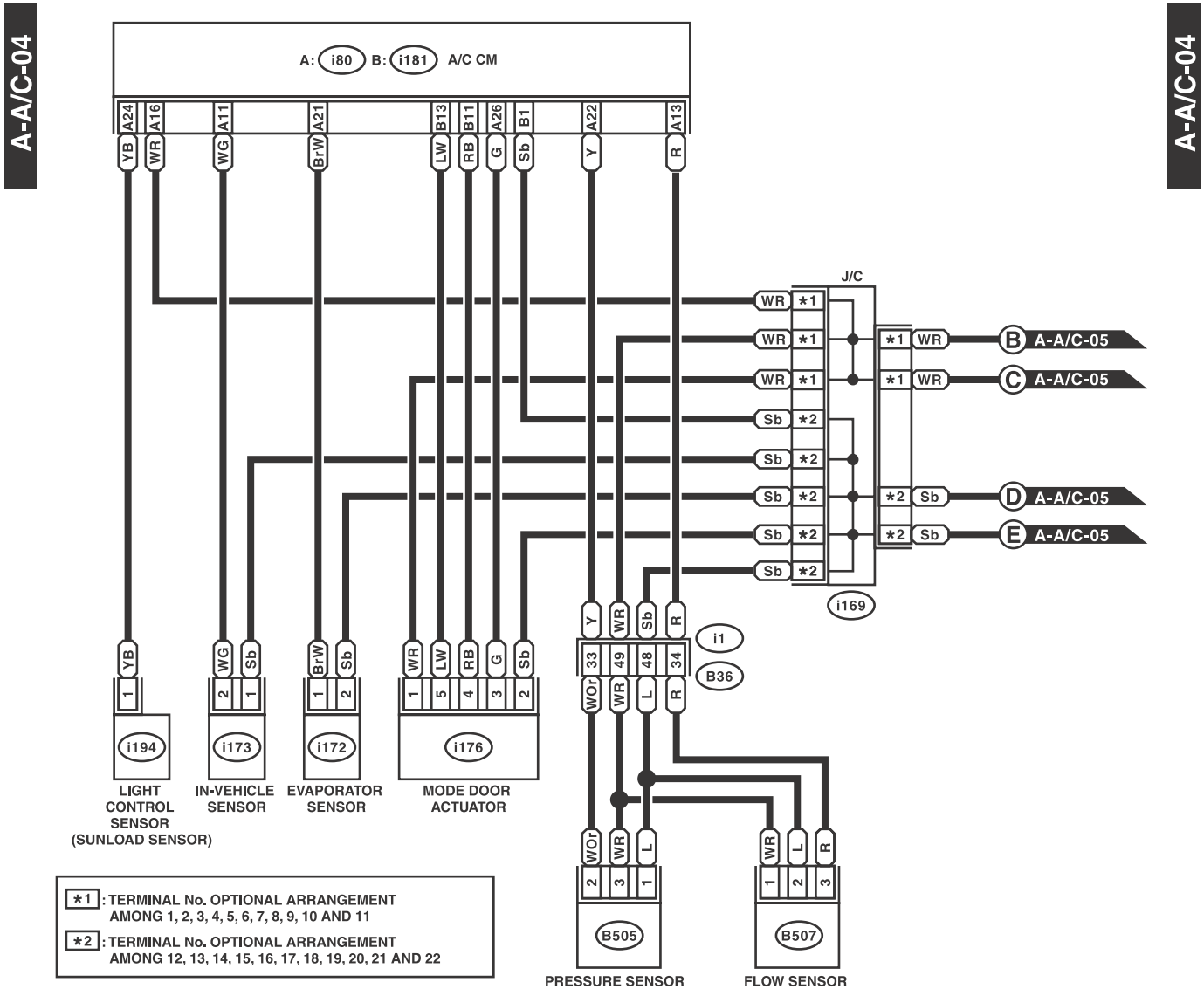

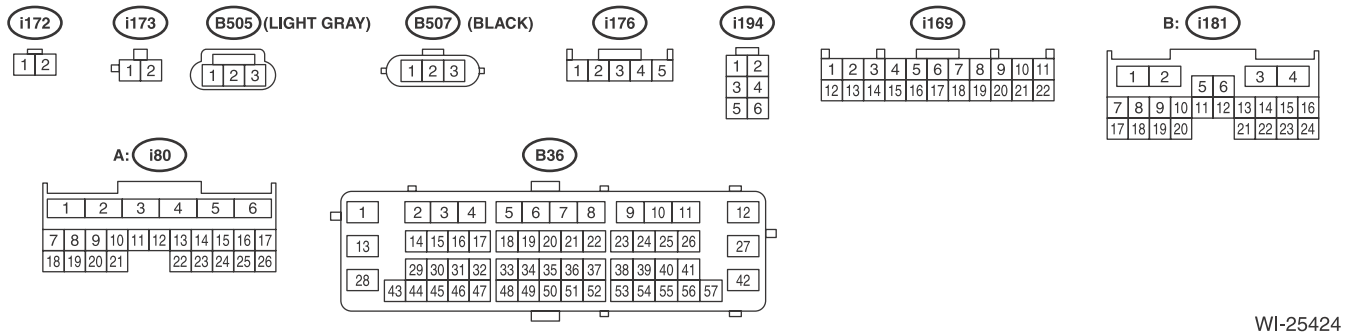

WI-25424

A-A/C-05

A-A/C-05

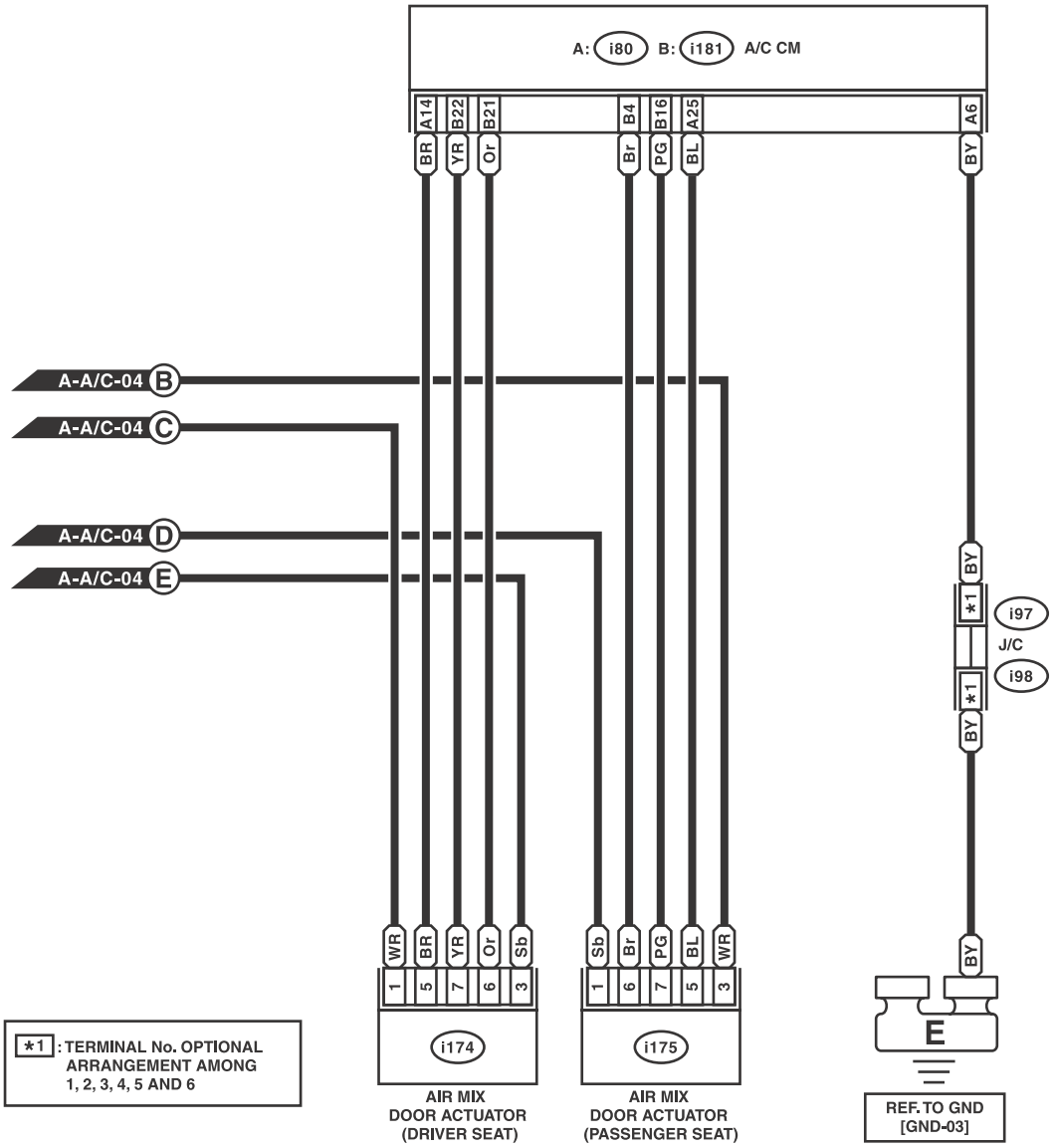

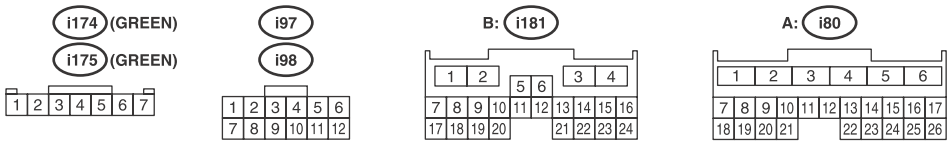

WI-25425

7. AT Control System

A: WIRING DIAGRAM

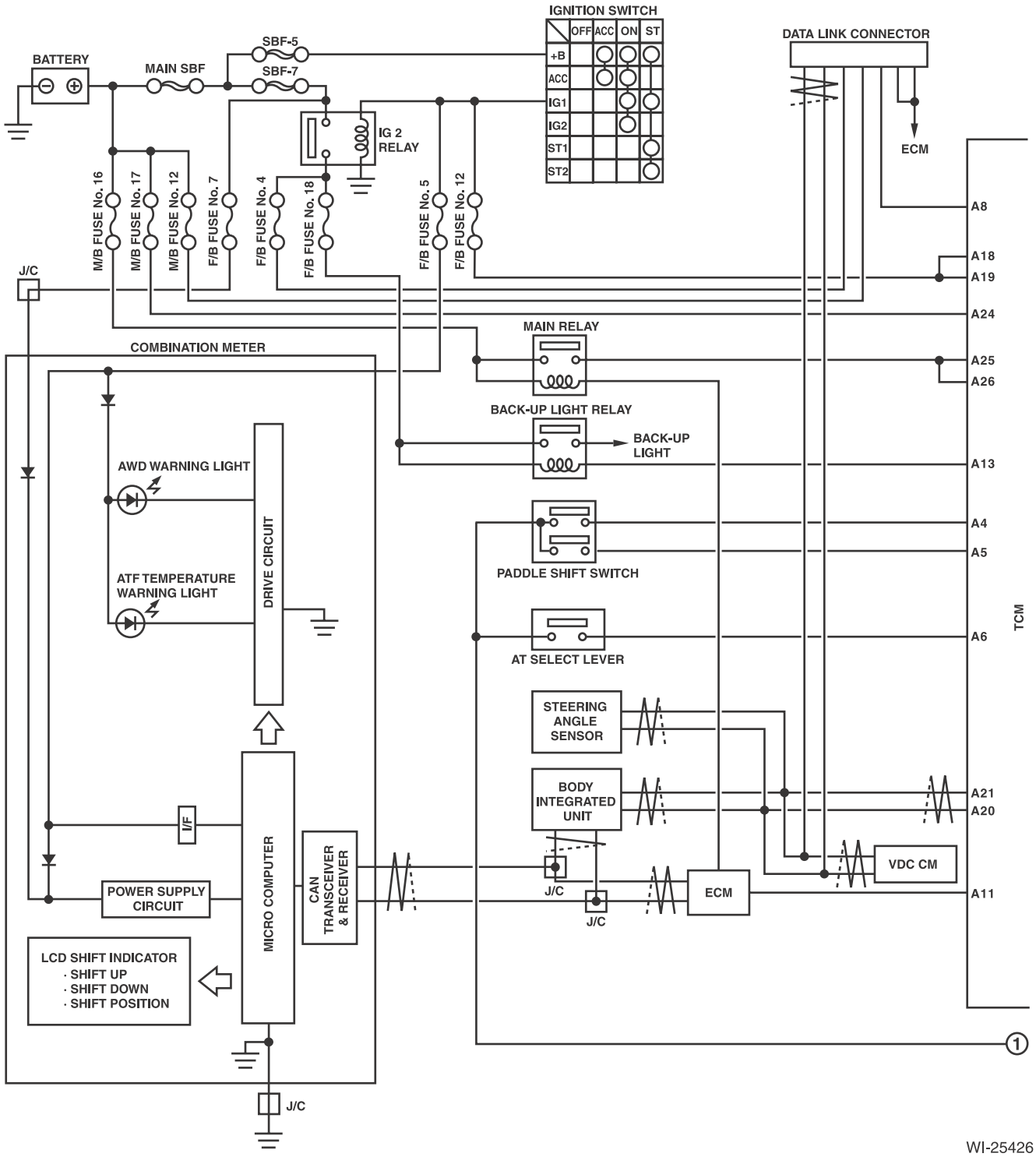

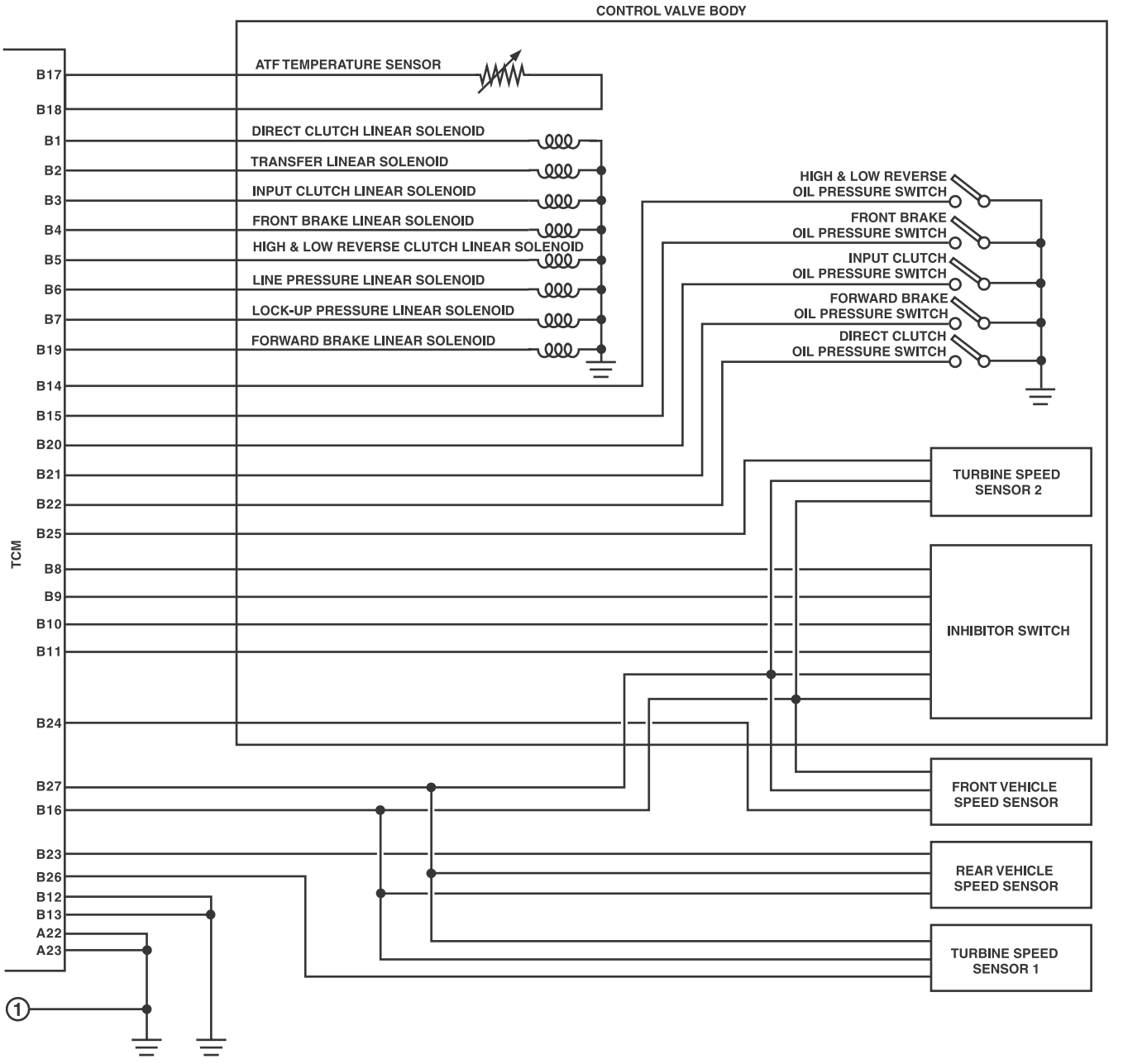
CONTROL VALVE BODY
ATF TEMPERATURE SENSOR
DIRECT CLUTCH LINEAR SOLENOID
TRANSFER LINEAR SOLENOID
INPUT CLUTCH LINEAR SOLENOID
FRONT BRAKE LINEAR SOLENOID
HIGH & LOW REVERSE CLUTCH LINEAR SOLENOID
LINE PRESSURE LINEAR SOLENOID
LOCK-UP PRESSURE LINEAR SOLENOID
FORWARD BRAKE LINEAR SOLENOID
HIGH & LOW REVERSE OIL PRESSURE SWITCH
FRONT BRAKE OIL PRESSURE SWITCH
INPUT CLUTCH OIL PRESSURE SWITCH
FORWARD BRAKE OIL PRESSURE SWITCH
DIRECT CLUTCH OIL PRESSURE SWITCH
TCM
B17
B18
B1
B2
B3
B4
B5
B6
B7
B19
B14
B15
B20
B21
B22
B25
B8
B9
B10
B11
B24
B27
B16
B23
B26
B12
B13
A22
A23
1
TURBINE SPEED SENSOR 2
INHIBITOR SWITCH
FRONT VEHICLE SPEED SENSOR
REAR VEHICLE SPEED SENSOR
TURBINE SPEED SENSOR 1

WI-25427

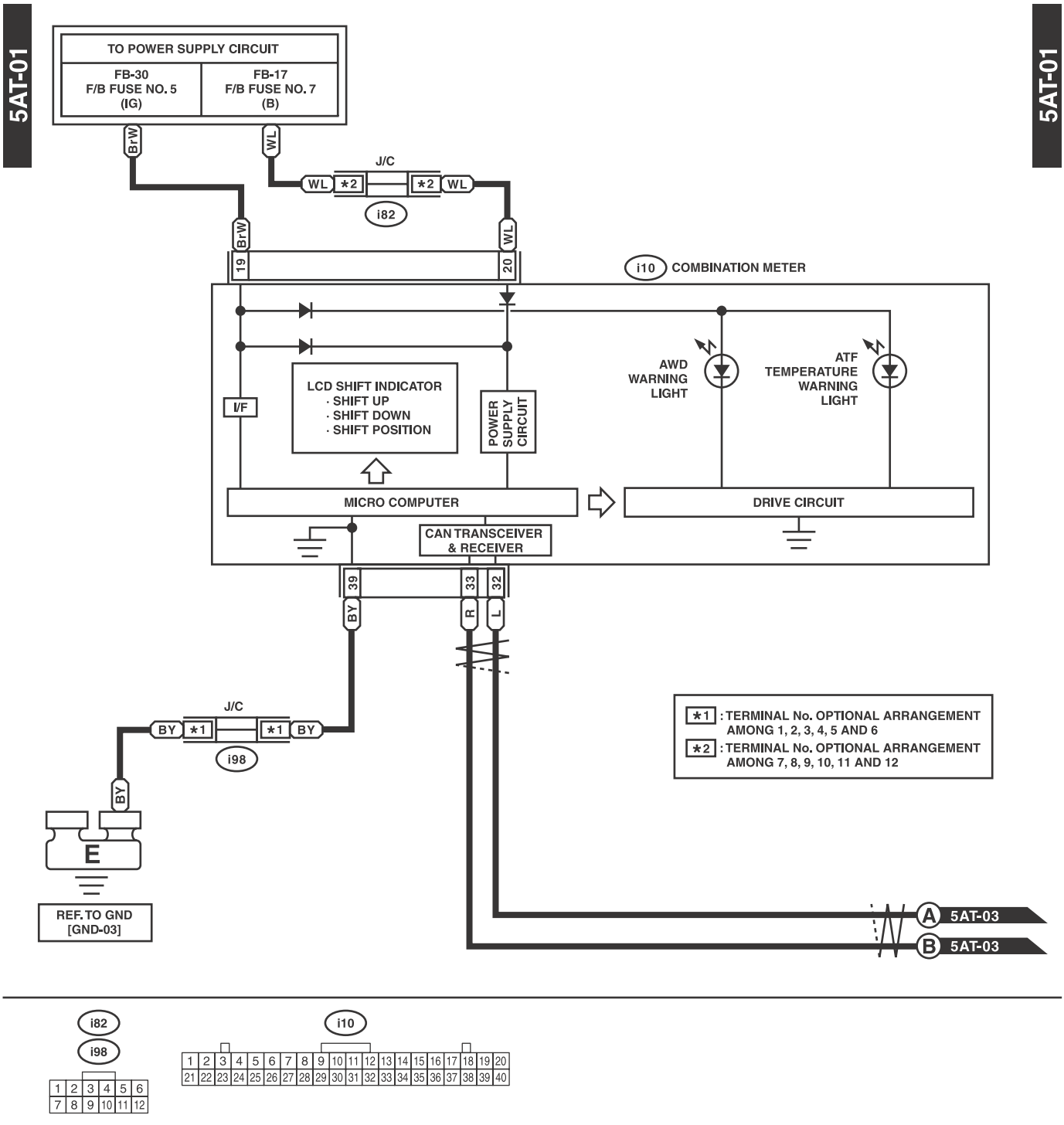
5AT-01
5AT-01
TO POWER SUPPLY CIRCUIT
FB-30
F/B FUSE NO. 5
(IG)
FB-17
F/B FUSE NO. 7
(B)
Br-W
WL
J/C
WL
*2
*2
WL
i82
Br-W
WL
19
20
i10 COMBINATION METER
I/F
LCD SHIFT INDICATOR
· SHIFT UP
· SHIFT DOWN
· SHIFT POSITION
POWER SUPPLY CIRCUIT
AWD WARNING LIGHT
ATF TEMPERATURE WARNING LIGHT
MICRO COMPUTER
DRIVE CIRCUIT
CAN TRANSCEIVER & RECEIVER
39
33
32
BY
R
L
J/C
BY
*1
*1
BY
i98
BY
E
REF. TO GND
[GND-03]
*1 : TERMINAL No. OPTIONAL ARRANGEMENT AMONG 1, 2, 3, 4, 5 AND 6
*2 : TERMINAL No. OPTIONAL ARRANGEMENT AMONG 7, 8, 9, 10, 11 AND 12
A 5AT-03
B 5AT-03

i82
i98
1 2 3 4 5 6
7 8 9 10 11 12
i10
1 2 3 4 5 6 7 8 9 10 11 12 13 14 15 16 17 18 19 20
21 22 23 24 25 26 27 28 29 30 31 32 33 34 35 36 37 38 39 40

WI-25428

5AT-02

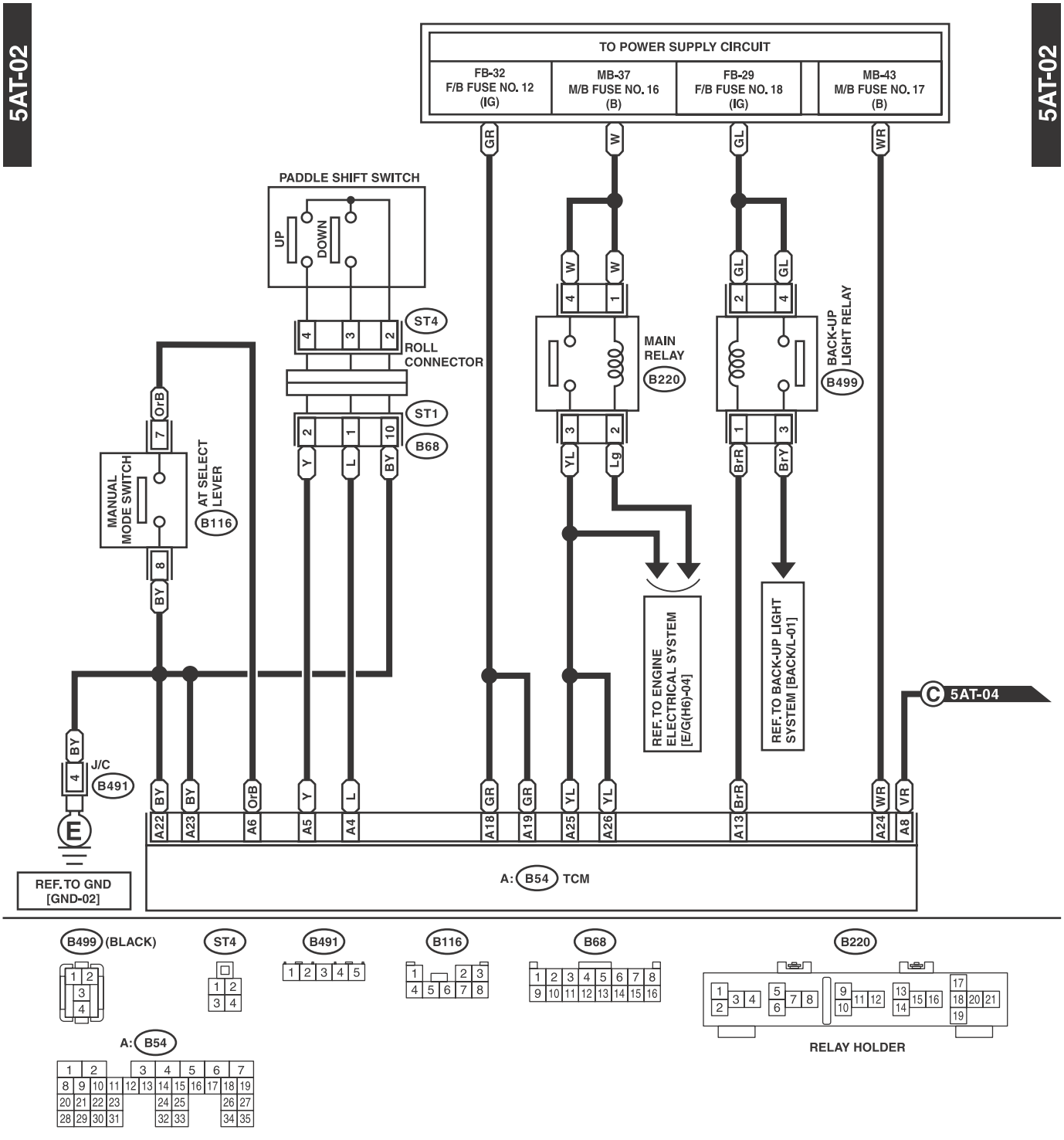

WI-25429

5AT-03

5AT-03

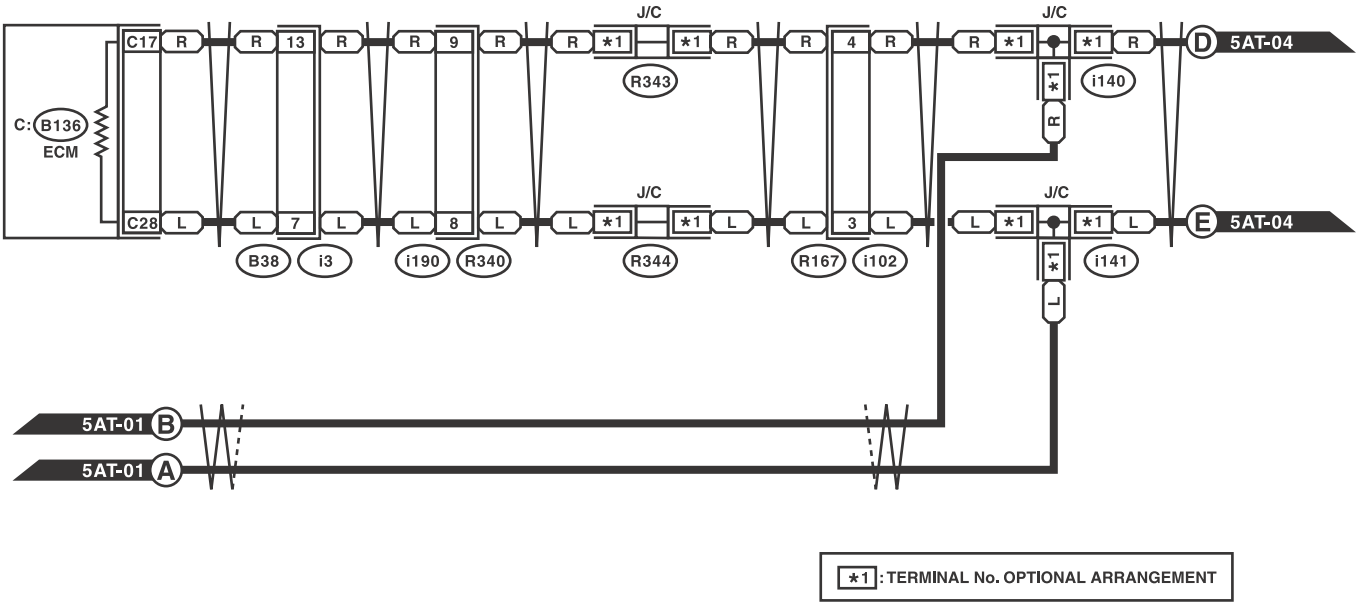

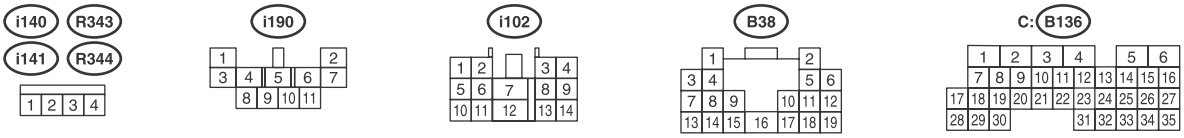

WI-25430

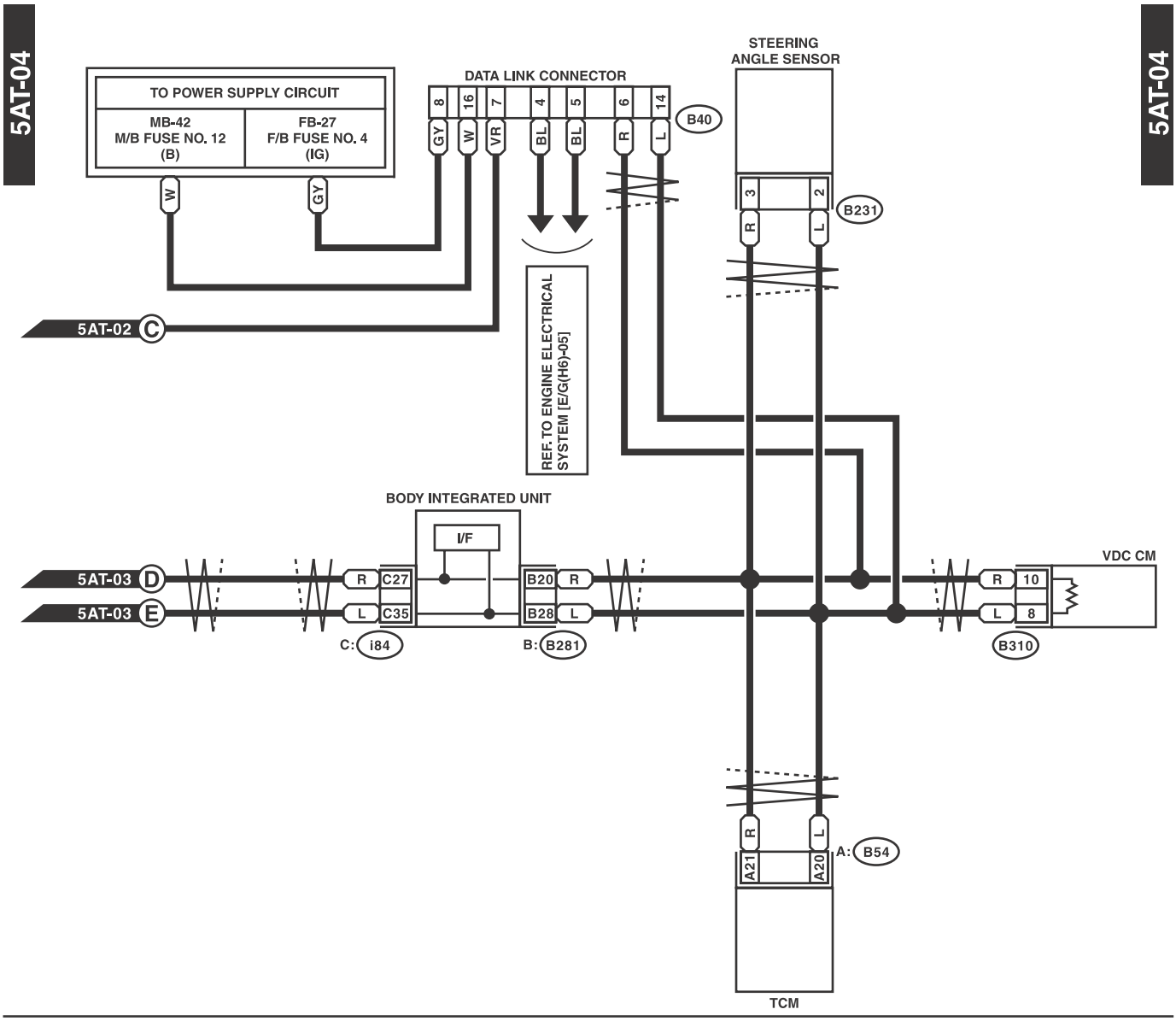
5AT-04
5AT-04
TO POWER SUPPLY CIRCUIT
MB-42
M/B FUSE NO. 12
(B)
FB-27
F/B FUSE NO. 4
(IG)
DATA LINK CONNECTOR
B40
STEERING
ANGLE SENSOR
B231
5AT-02 C
REF. TO ENGINE ELECTRICAL
SYSTEM [E/G(H6)-05]
BODY INTEGRATED UNIT
I/F
5AT-03 D
5AT-03 E
C27
C35
B20
B28
C: i84
B: B281
VDC CM
10
8
B310
A21
A20
A: B54
TCM

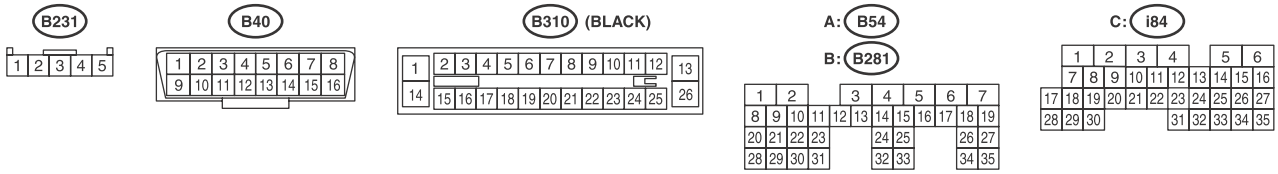
B231
B40
B310 (BLACK)
A: B54
B: B281
C: i84

WI-25431

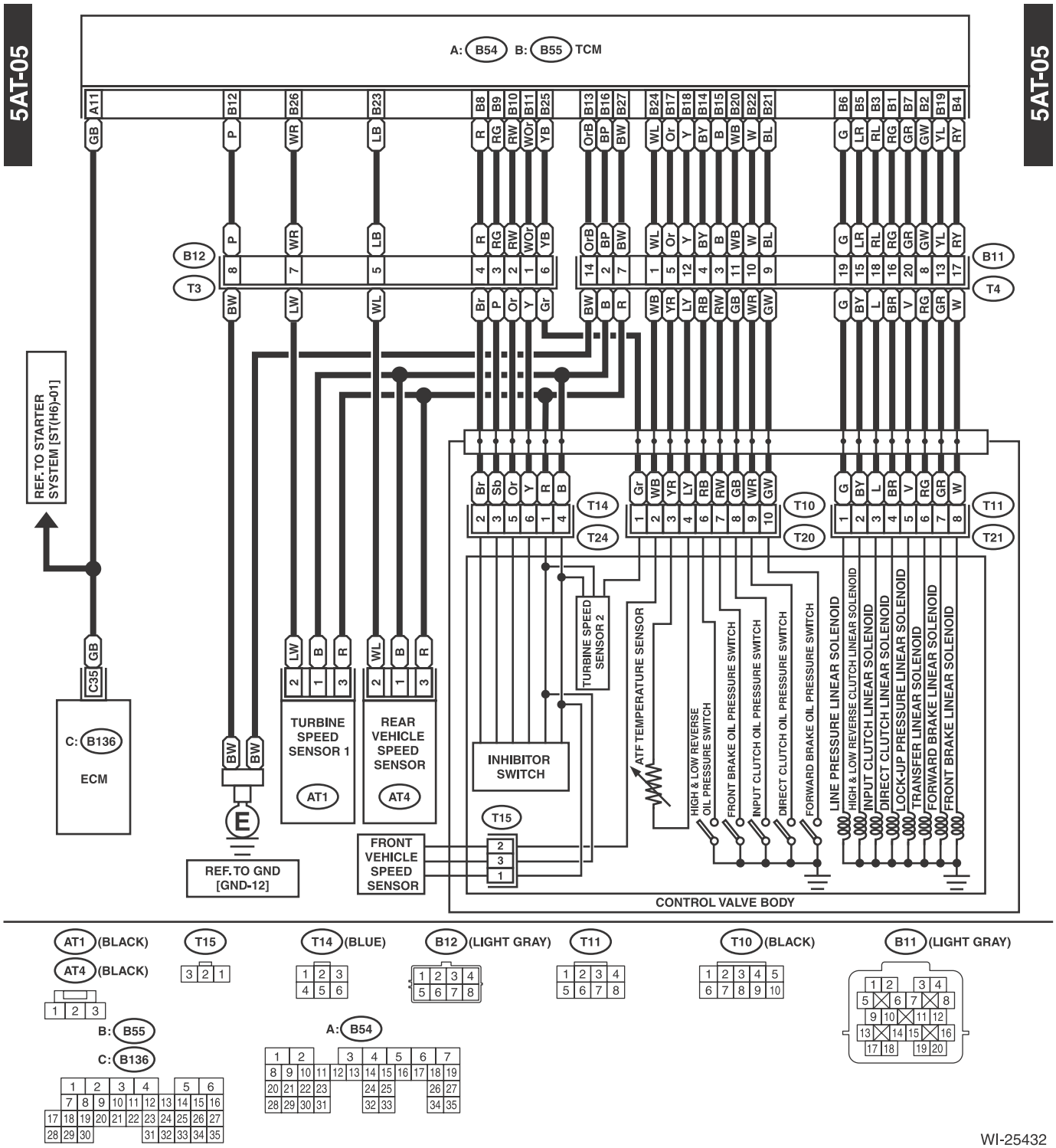
5AT-05
5AT-05
A: B54 B: B55 TCM
REF. TO STARTER SYSTEM [ST(H6)-01]
C: B136 ECM
TURBINE SPEED SENSOR 1
REAR VEHICLE SPEED SENSOR
TURBINE SPEED SENSOR 2
ATF TEMPERATURE SENSOR
INHIBITOR SWITCH
FRONT VEHICLE SPEED SENSOR
REF. TO GND [GND-12]
HIGH & LOW REVERSE OIL PRESSURE SWITCH
FRONT BRAKE OIL PRESSURE SWITCH
INPUT CLUTCH OIL PRESSURE SWITCH
DIRECT CLUTCH OIL PRESSURE SWITCH
FORWARD BRAKE OIL PRESSURE SWITCH
LINE PRESSURE LINEAR SOLENOID
HIGH & LOW REVERSE CLUTCH LINEAR SOLENOID
INPUT CLUTCH LINEAR SOLENOID
DIRECT CLUTCH LINEAR SOLENOID
LOCK-UP PRESSURE LINEAR SOLENOID
TRANSFER LINEAR SOLENOID
FORWARD BRAKE LINEAR SOLENOID
FRONT BRAKE LINEAR SOLENOID
CONTROL VALVE BODY
AT1 (BLACK)
AT4 (BLACK)
T15
T14 (BLUE)
B12 (LIGHT GRAY)
T11
T10 (BLACK)
B11 (LIGHT GRAY)
B: B55
C: B136
A: B54

WI-25432

8. AT Shift Lock Control System

A: WIRING DIAGRAM

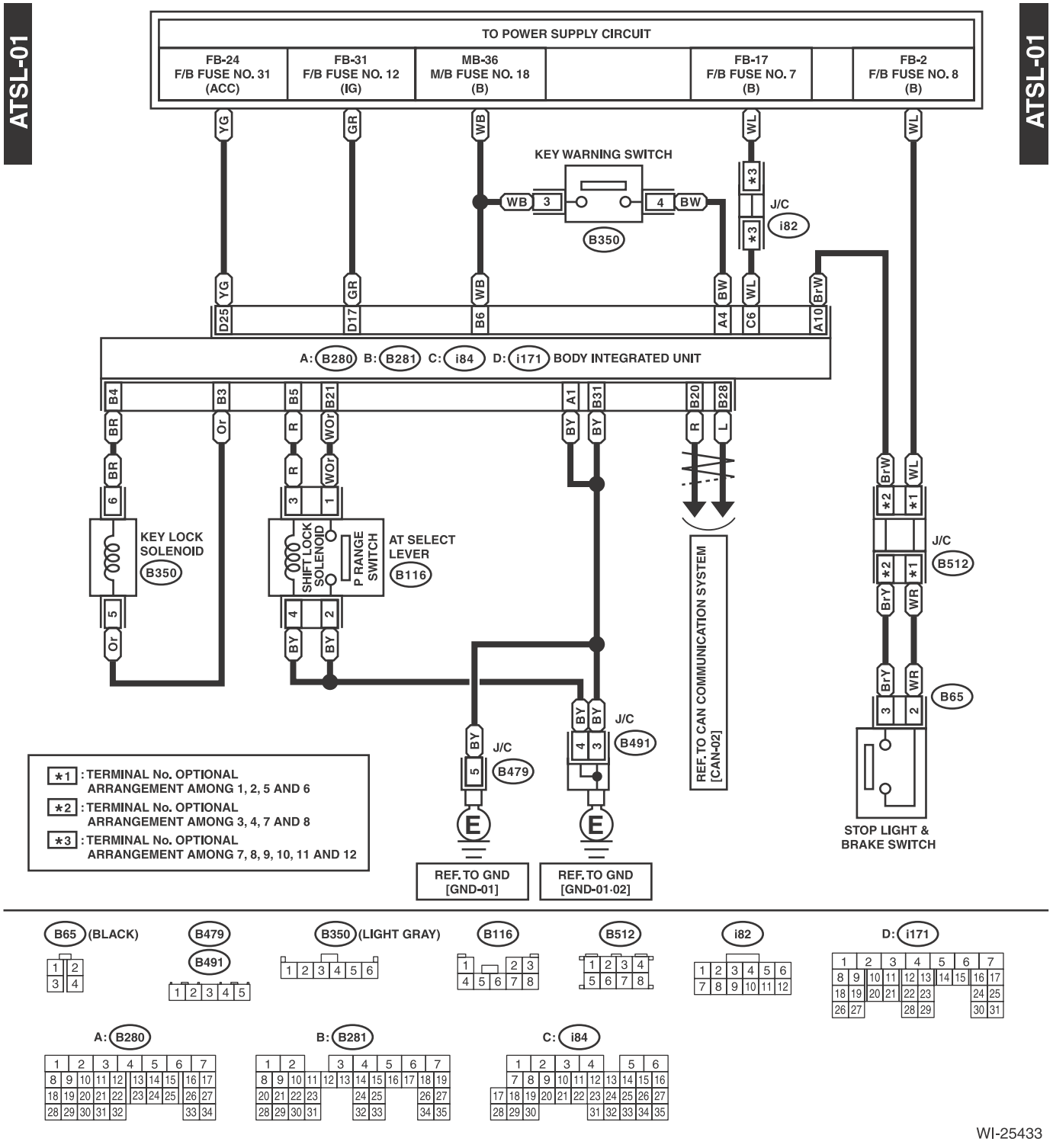

WI-25433

9. Audio System

A: WIRING DIAGRAM

1. NORMAL AUDIO

AUDIO(NO)-01

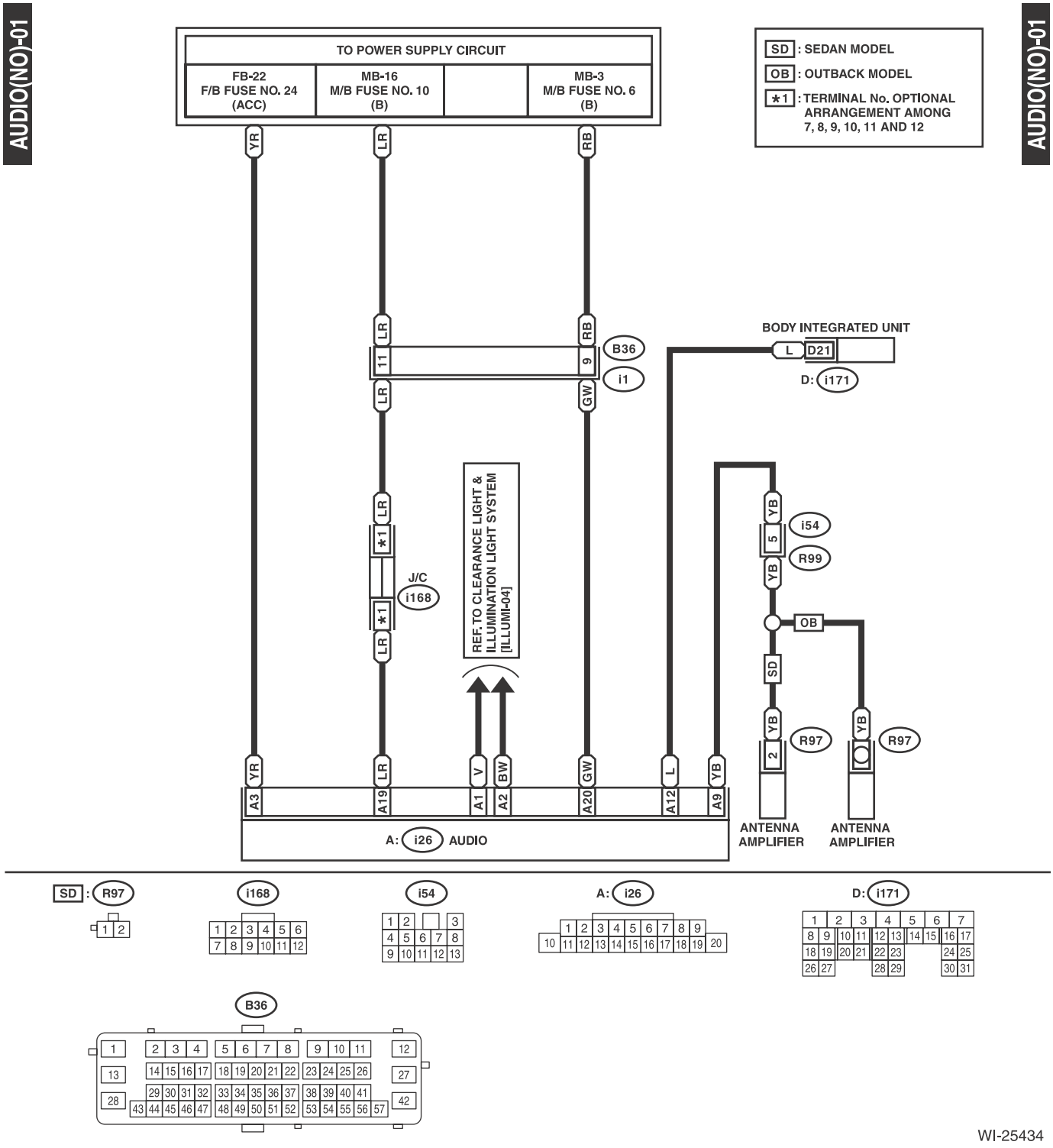

WI-25434

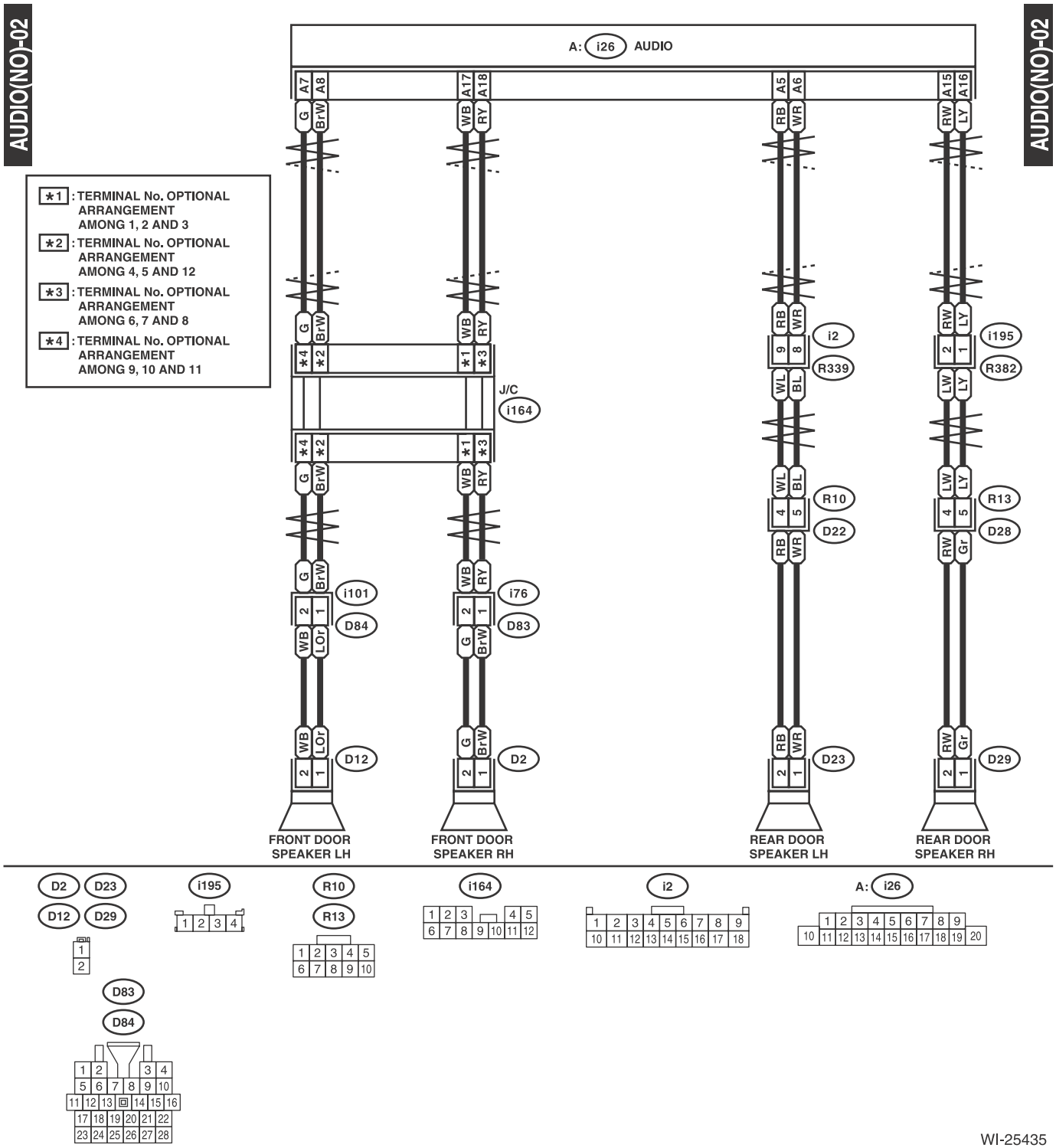
AUDIO(NO)-02
AUDIO(NO)-02
*1 : TERMINAL No. OPTIONAL ARRANGEMENT AMONG 1, 2 AND 3
*2 : TERMINAL No. OPTIONAL ARRANGEMENT AMONG 4, 5 AND 12
*3 : TERMINAL No. OPTIONAL ARRANGEMENT AMONG 6, 7 AND 8
*4 : TERMINAL No. OPTIONAL ARRANGEMENT AMONG 9, 10 AND 11
A: i26 AUDIO
J/C i164
i2
R339
i195
R382
R10
R13
D22
D28
i101
D84
i76
D83
D12
D2
D23
D29
FRONT DOOR SPEAKER LH
FRONT DOOR SPEAKER RH
REAR DOOR SPEAKER LH
REAR DOOR SPEAKER RH
D2
D23
D12
D29
D83
D84
i195
R10
R13
i164
i2
A: i26
WI-25435

AUDIO(NO)-03

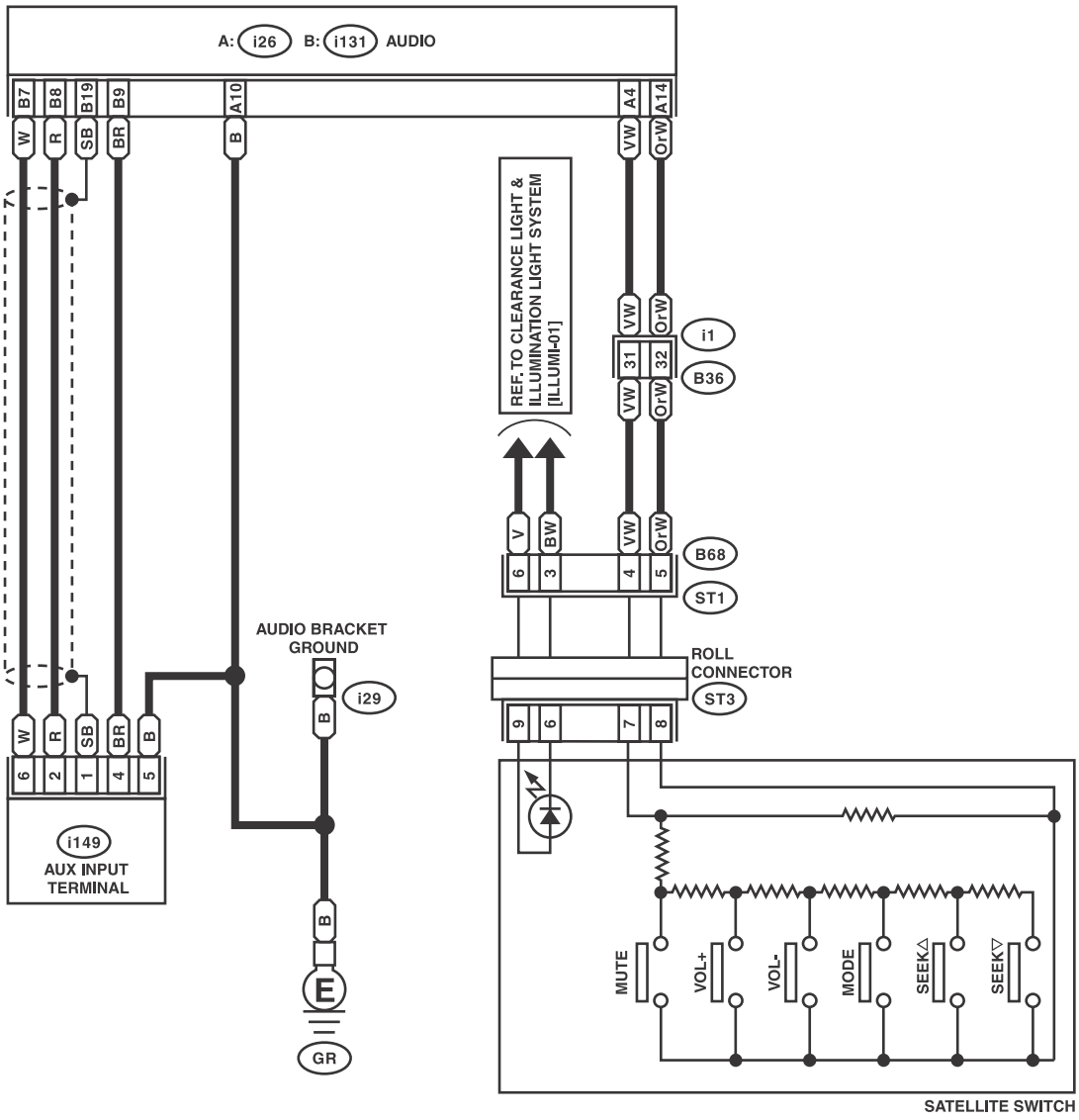

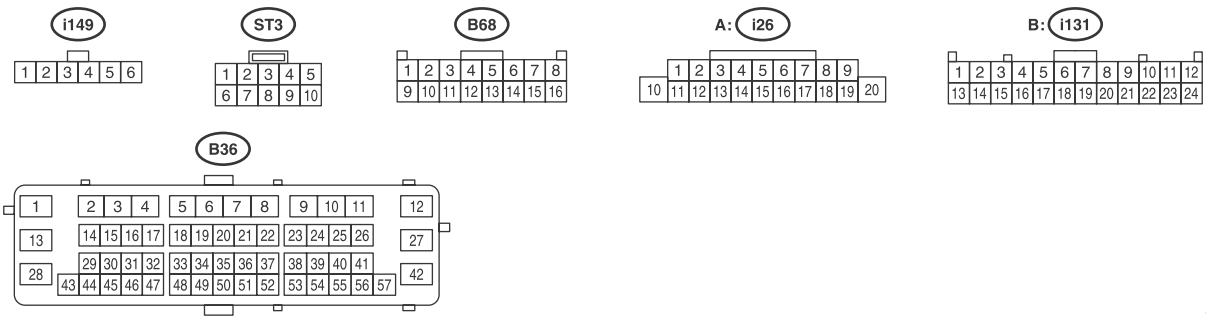

WI-25436

AUDIO(NO)-03

2. PREMIUM AUDIO

AUDIO(PA)-01

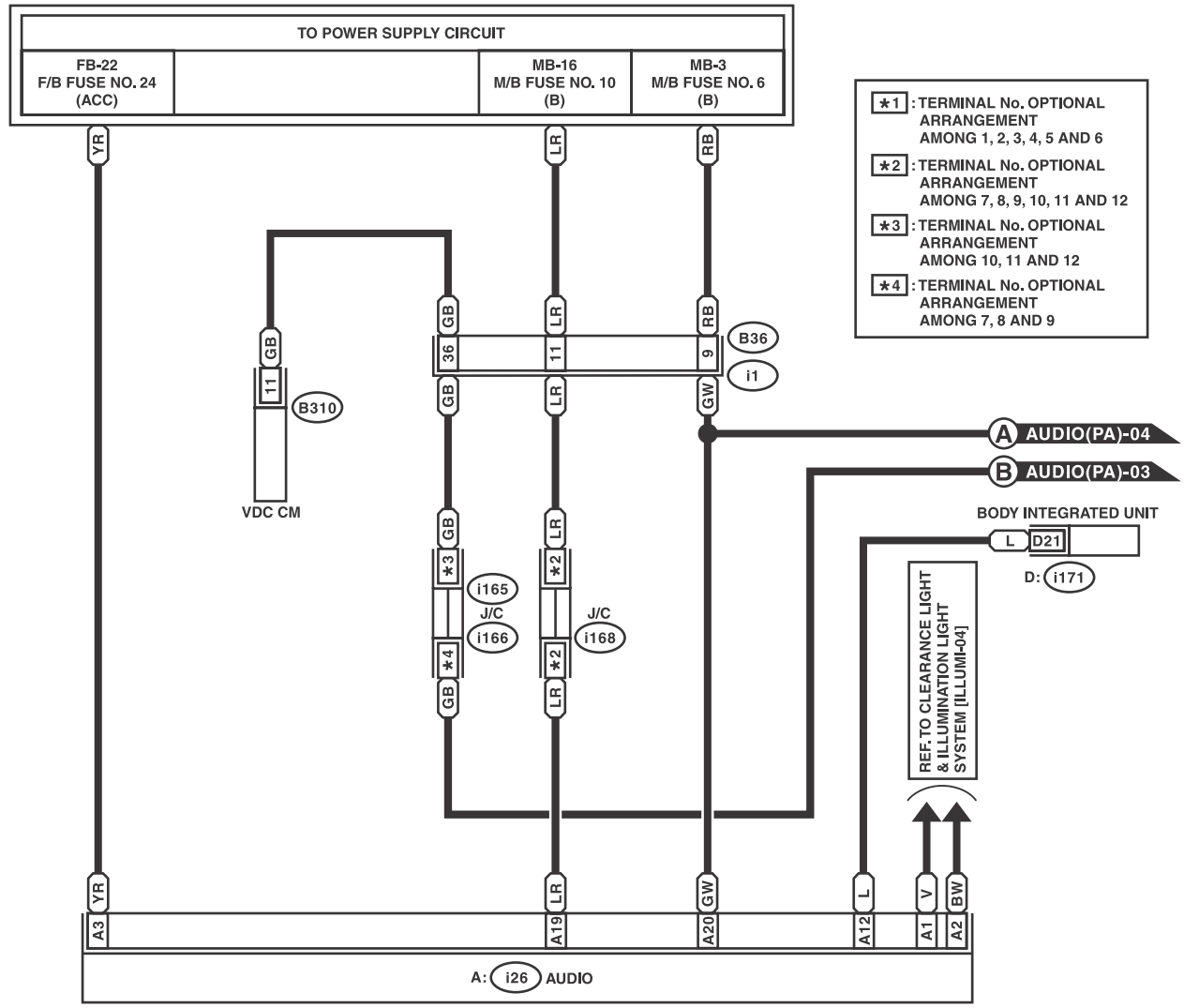

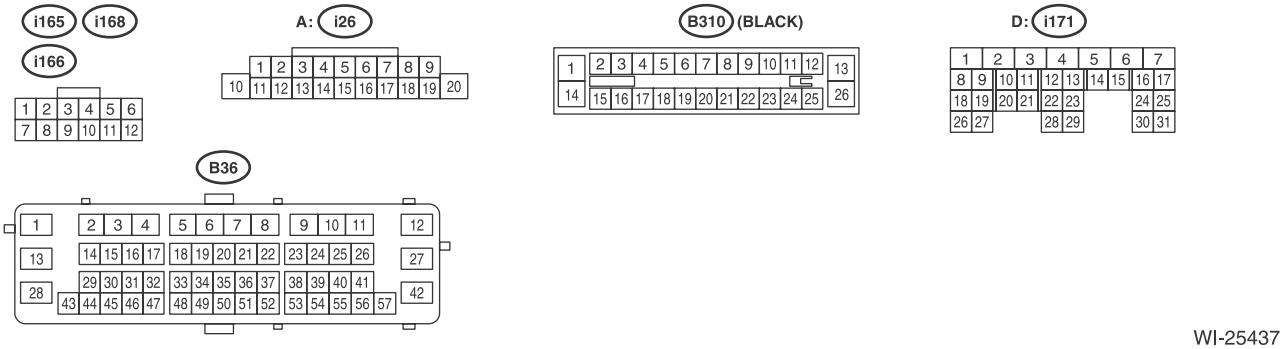

WI-25437

AUDIO(PA)-01

AUDIO(PA)-02

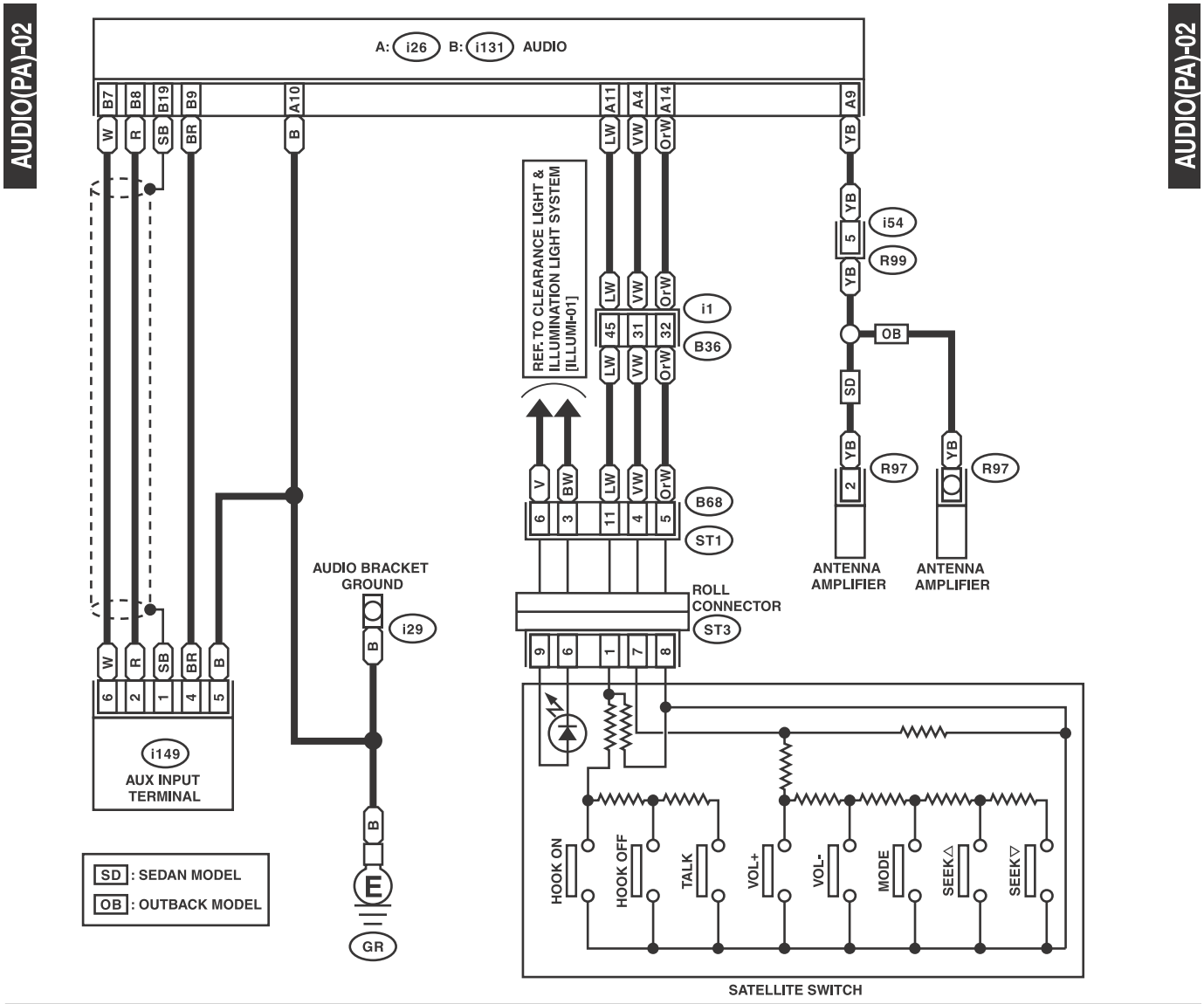

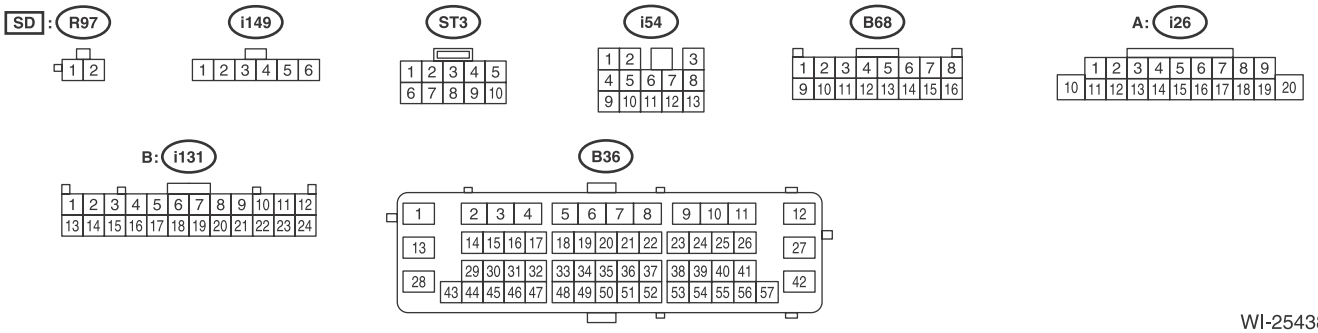

WI-25438

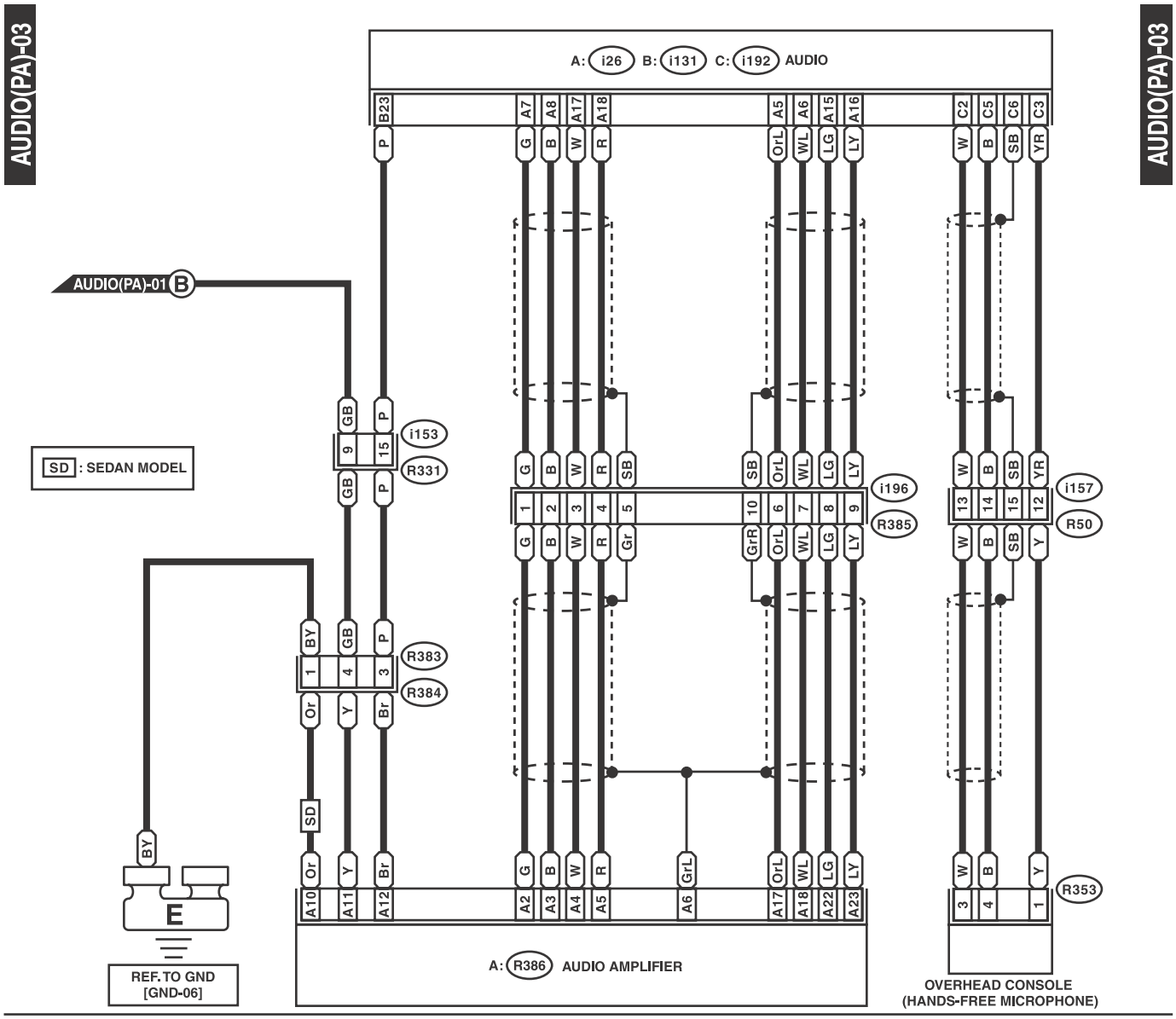
AUDIO(PA)-03
AUDIO(PA)-03
A: i26 B: i131 C: i192 AUDIO
AUDIO(PA)-01 B
SD : SEDAN MODEL
i153
R331
i196
R385
i157
R50
R383
R384
R353
SD
BY
E
REF. TO GND
[GND-06]
A: R386 AUDIO AMPLIFIER
OVERHEAD CONSOLE
(HANDS-FREE MICROPHONE)

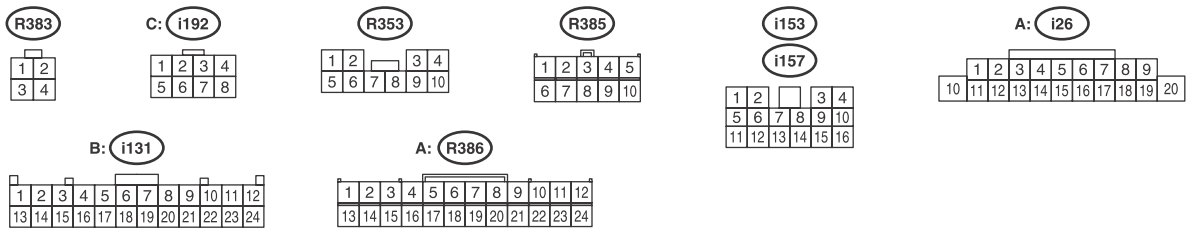
R383
C: i192
R353
R385
i153
i157
A: i26
B: i131
A: R386

WI-25439

AUDIO(PA)-04

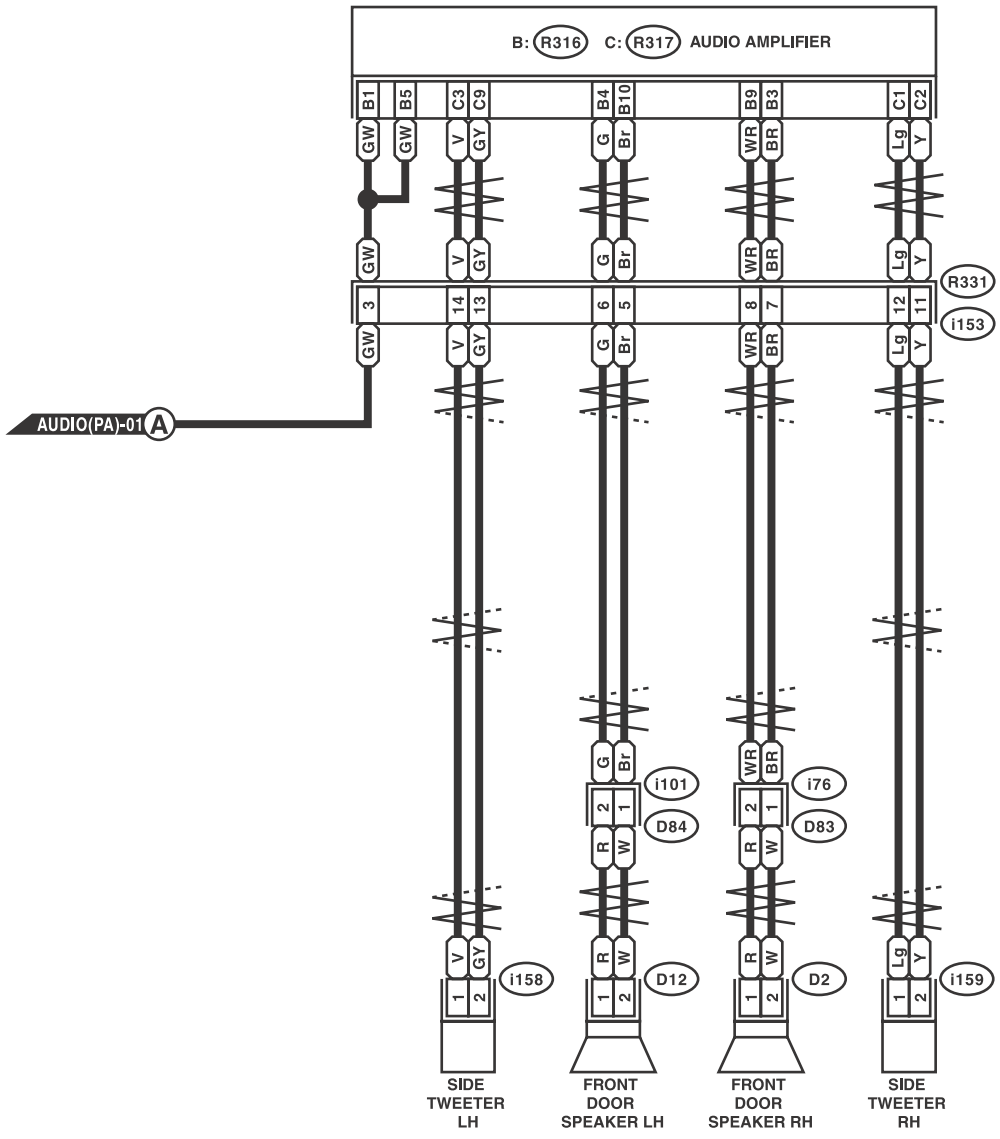

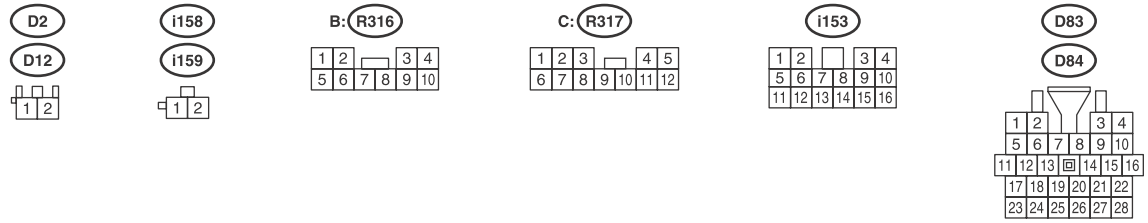

WI-25440

AUDIO(PA)-05

AUDIO(PA)-05

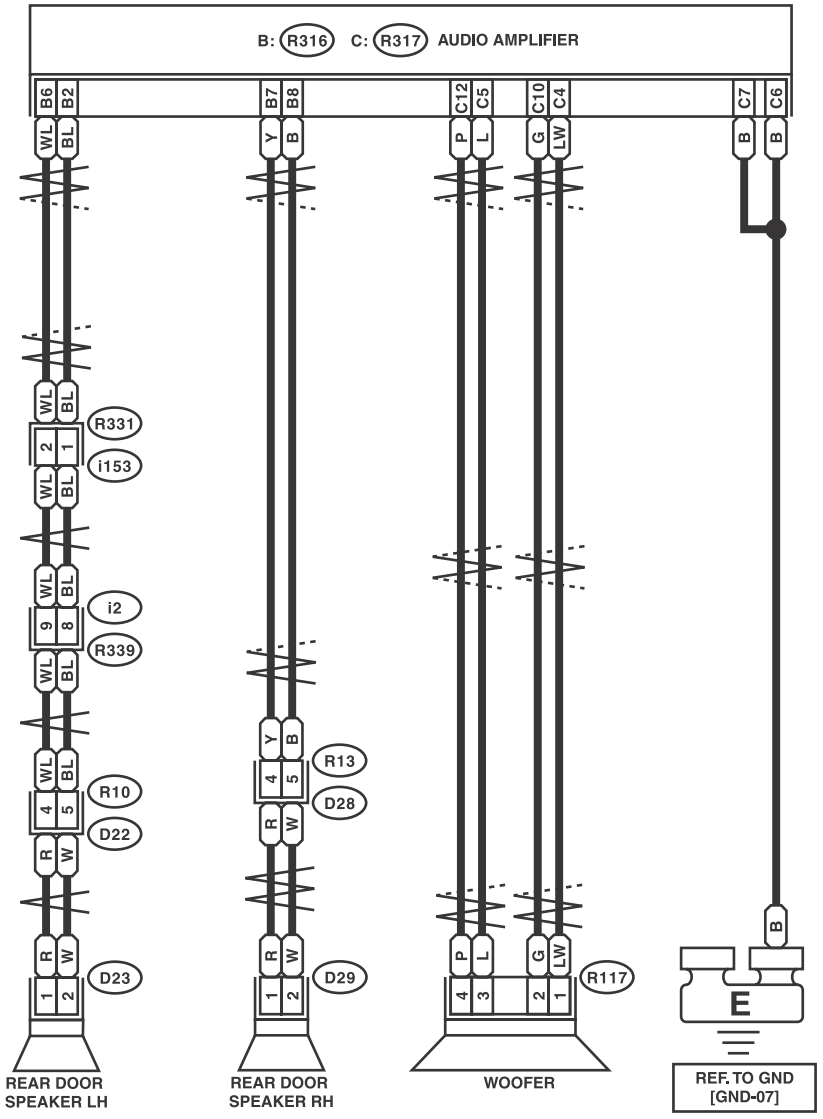

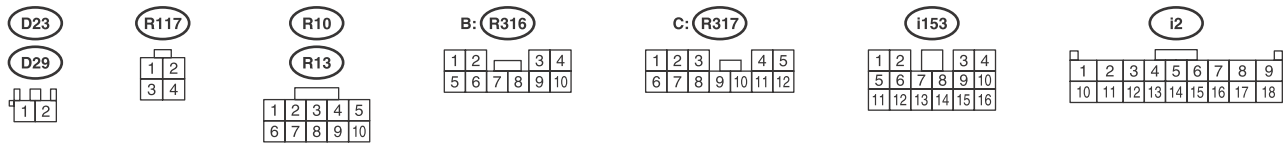

WI-25441

10.Back-up Light System

A: WIRING DIAGRAM

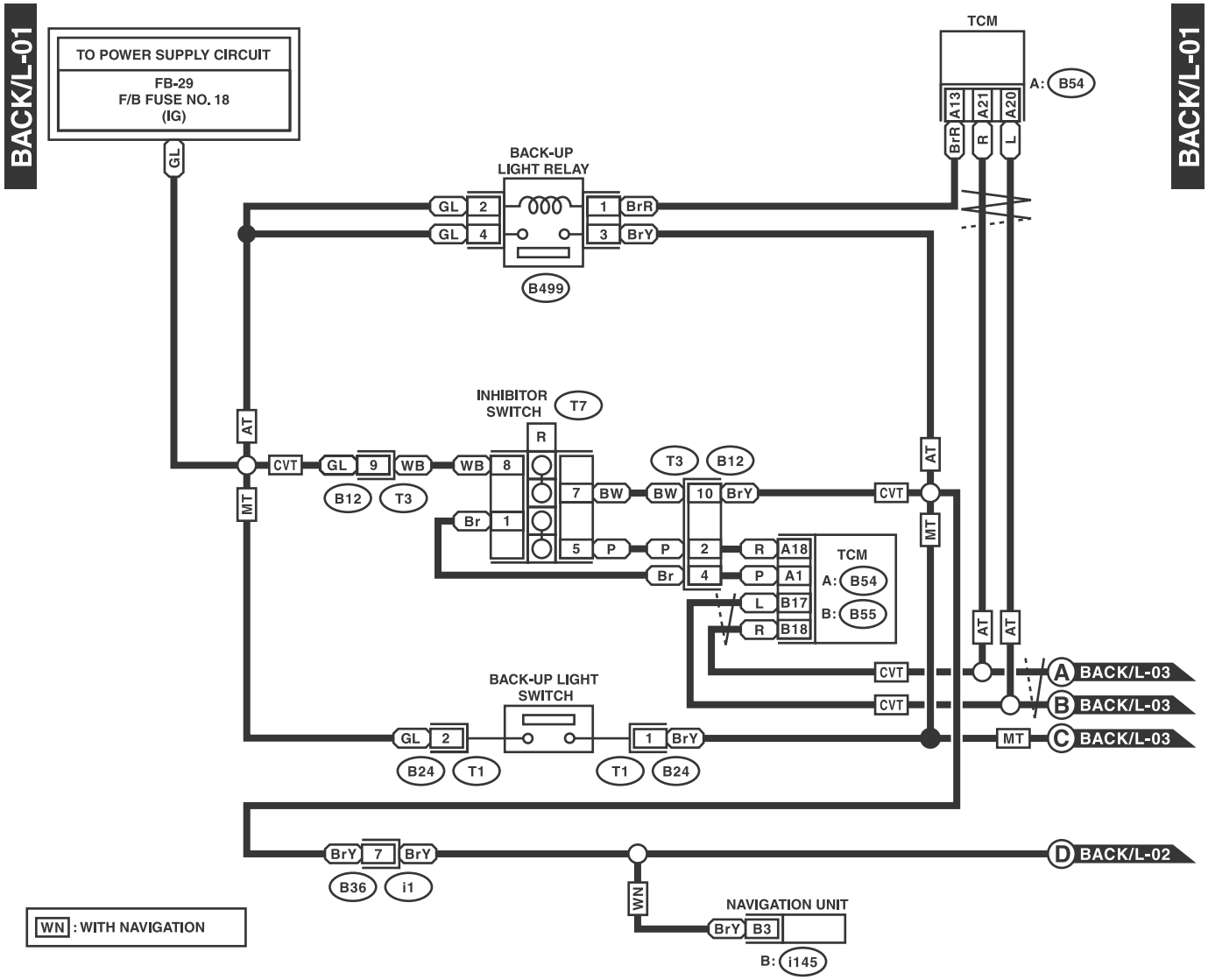

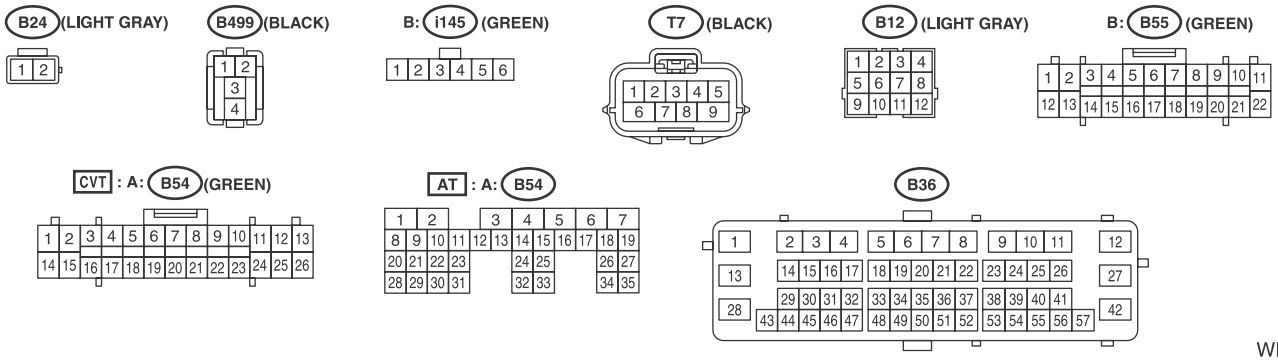

WI-25442

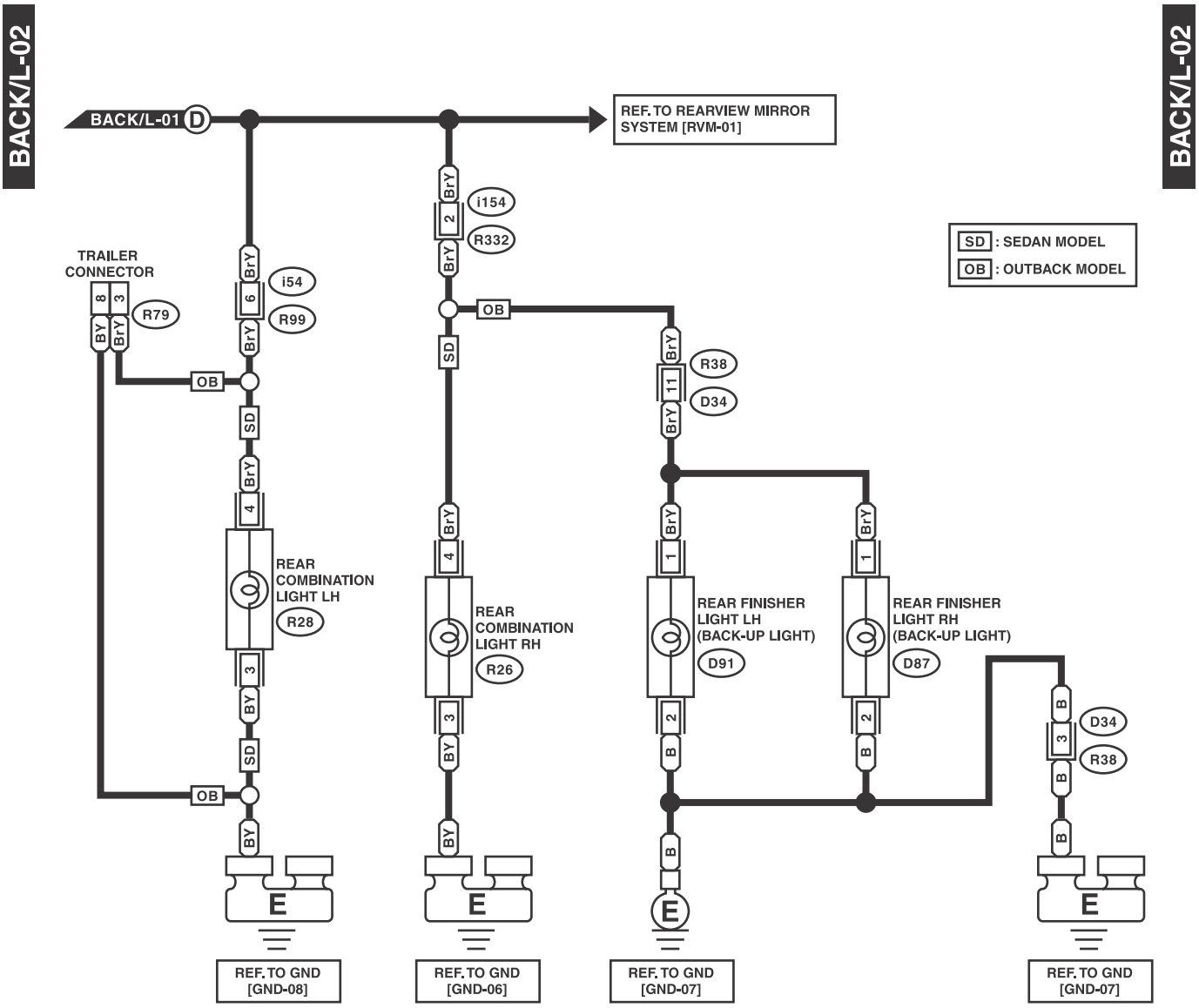
BACK/L-02
BACK/L-01
D
REF. TO REARVIEW MIRROR SYSTEM [RVM-01]
SD : SEDAN MODEL
OB : OUTBACK MODEL
TRAILER CONNECTOR
R79
i54
R99
i154
R332
R38
D34
REAR COMBINATION LIGHT LH
R28
REAR COMBINATION LIGHT RH
R26
REAR FINISHER LIGHT LH (BACK-UP LIGHT)
D91
REAR FINISHER LIGHT RH (BACK-UP LIGHT)
D87
REF. TO GND [GND-08]
REF. TO GND [GND-06]
REF. TO GND [GND-07]
REF. TO GND [GND-07]

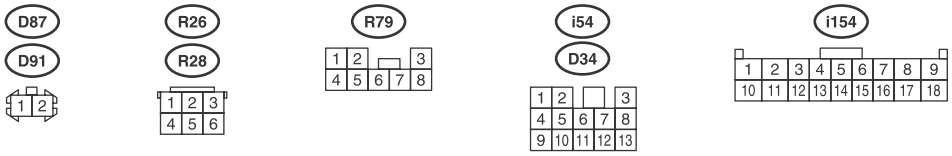
D87
D91
R26
R28
R79
i54
D34
i154

WI-25443

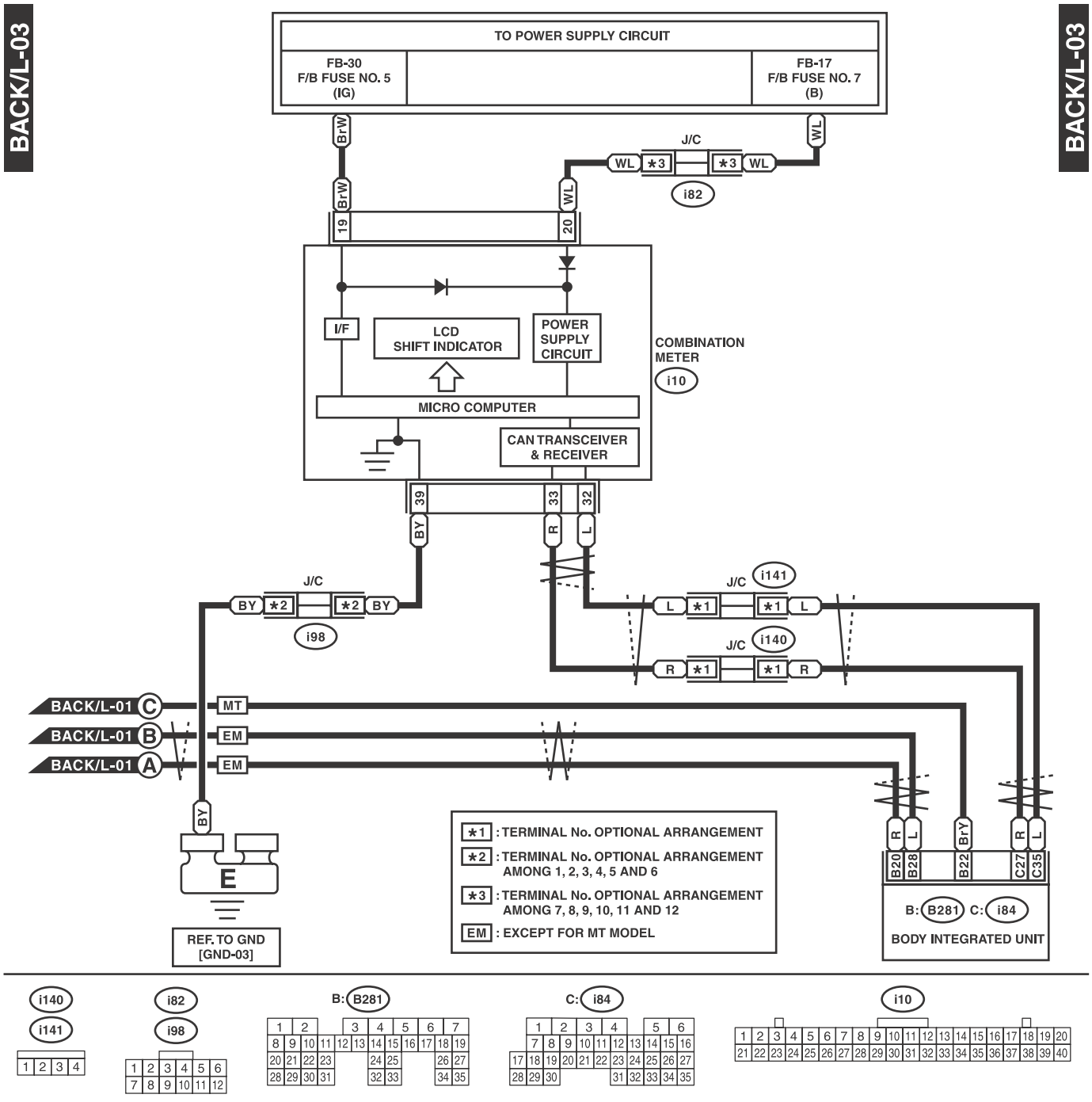
BACK/L-03
BACK/L-03
TO POWER SUPPLY CIRCUIT
FB-30
F/B FUSE NO. 5
(IG)
FB-17
F/B FUSE NO. 7
(B)
BrW
WL
J/C
i82
19
20
I/F
LCD
SHIFT INDICATOR
POWER
SUPPLY
CIRCUIT
COMBINATION
METER
i10
MICRO COMPUTER
CAN TRANSCEIVER
& RECEIVER
39
33
32
BY
R
L
J/C
i98
i141
i140
BACK/L-01 C
BACK/L-01 B
BACK/L-01 A
MT
EM
EM
E
REF. TO GND
[GND-03]
*1 : TERMINAL No. OPTIONAL ARRANGEMENT
*2 : TERMINAL No. OPTIONAL ARRANGEMENT AMONG 1, 2, 3, 4, 5 AND 6
*3 : TERMINAL No. OPTIONAL ARRANGEMENT AMONG 7, 8, 9, 10, 11 AND 12
EM : EXCEPT FOR MT MODEL
BrY
B20
B28
B22
C27
C35
B: B281
C: i84
BODY INTEGRATED UNIT

i140
i141
i82
i98
B: B281
C: i84
i10

WI-25444

11.CAN Communication System

A: WIRING DIAGRAM

CAN-01

CAN-01

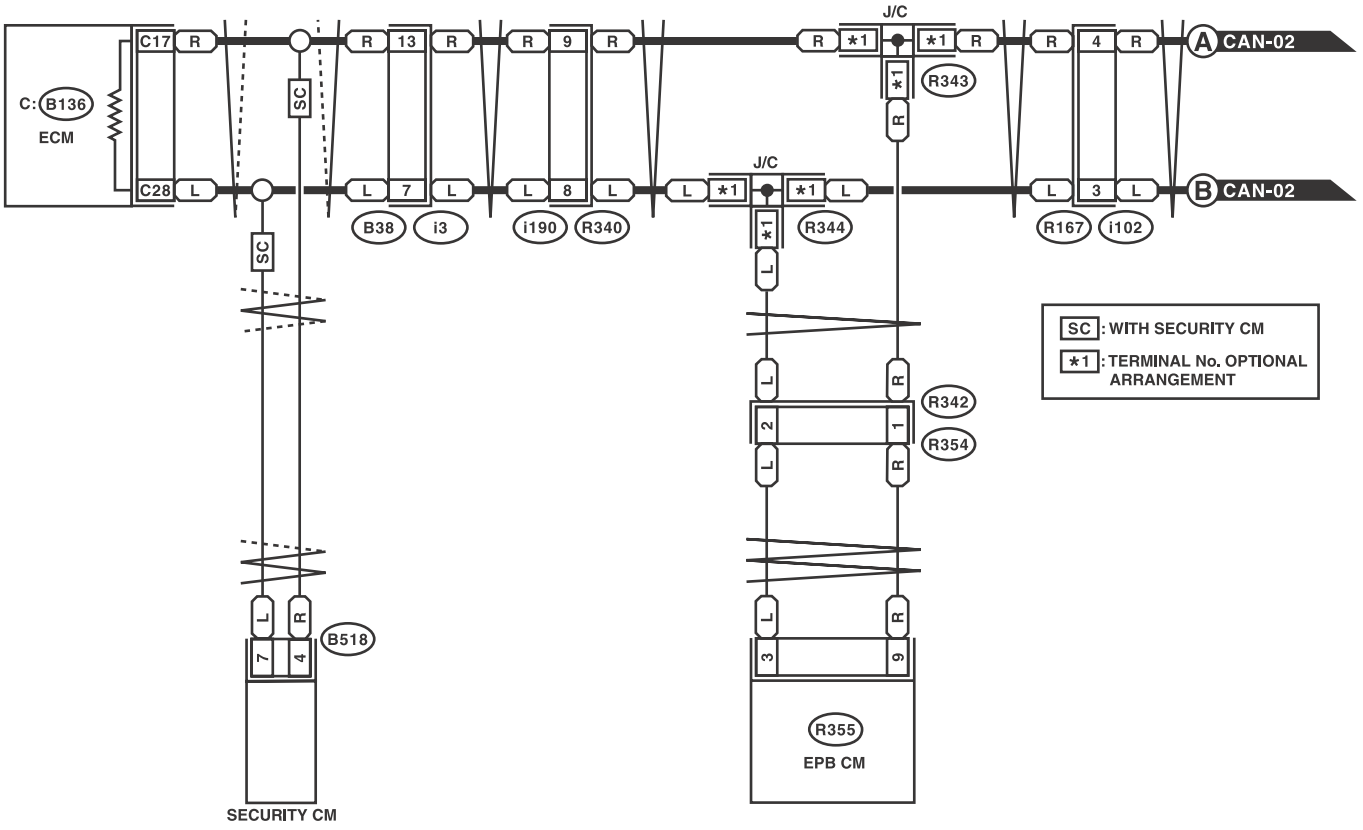

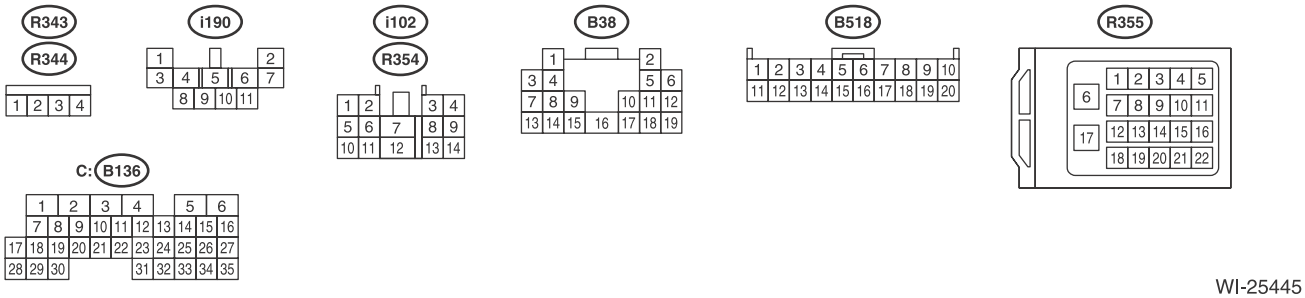

WI-25445

CAN-02

CAN-02

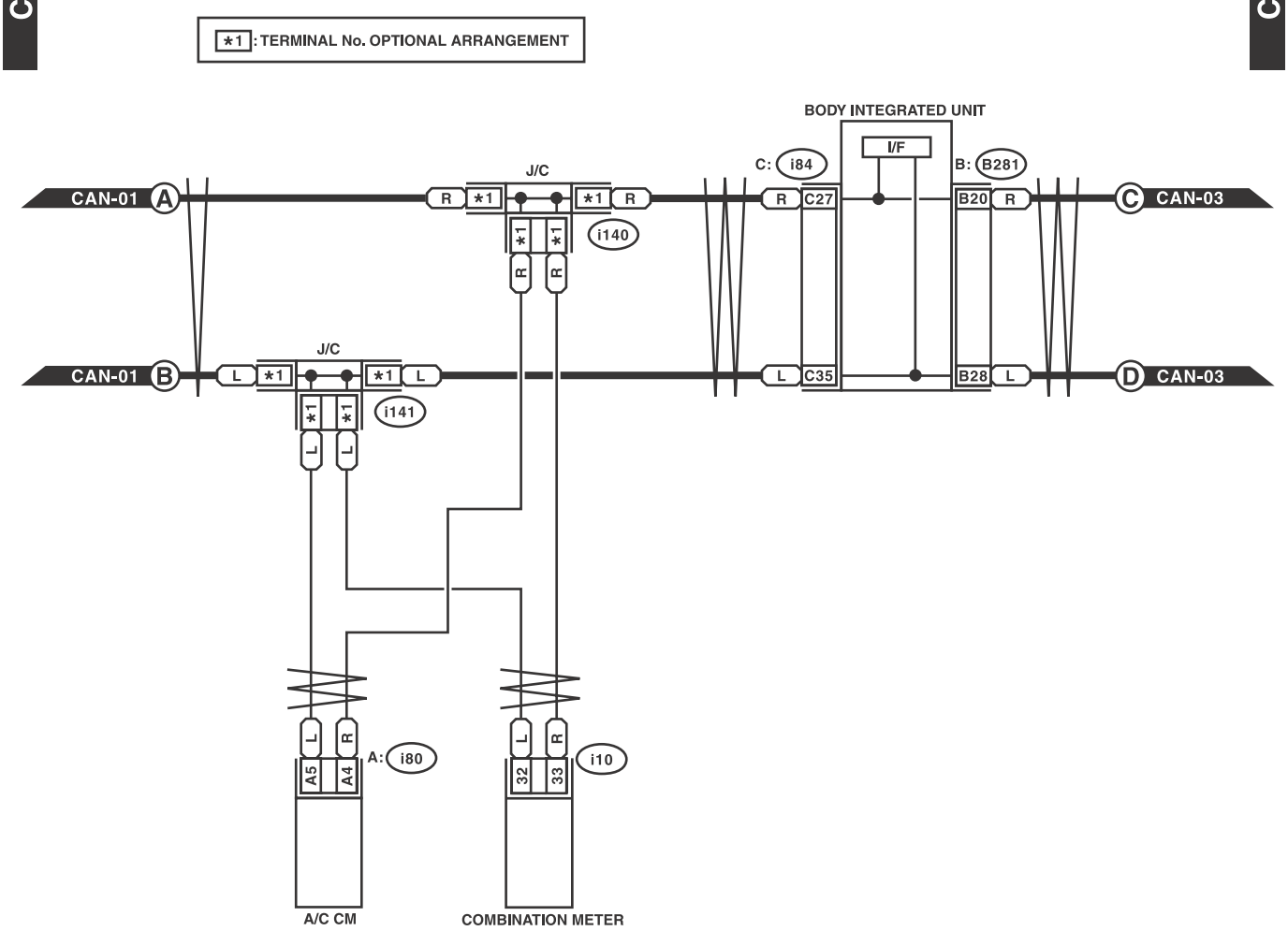

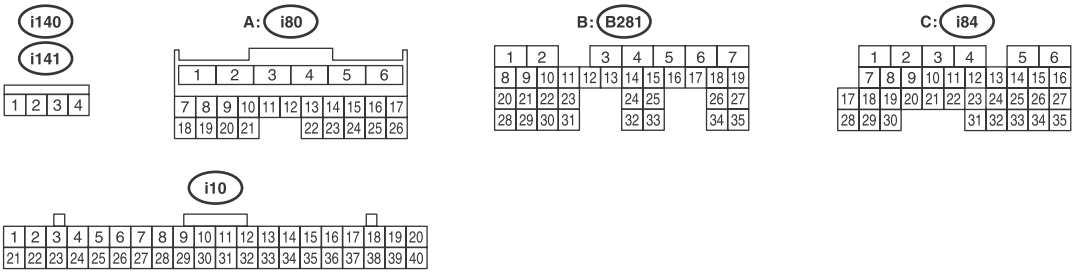

WI-25446

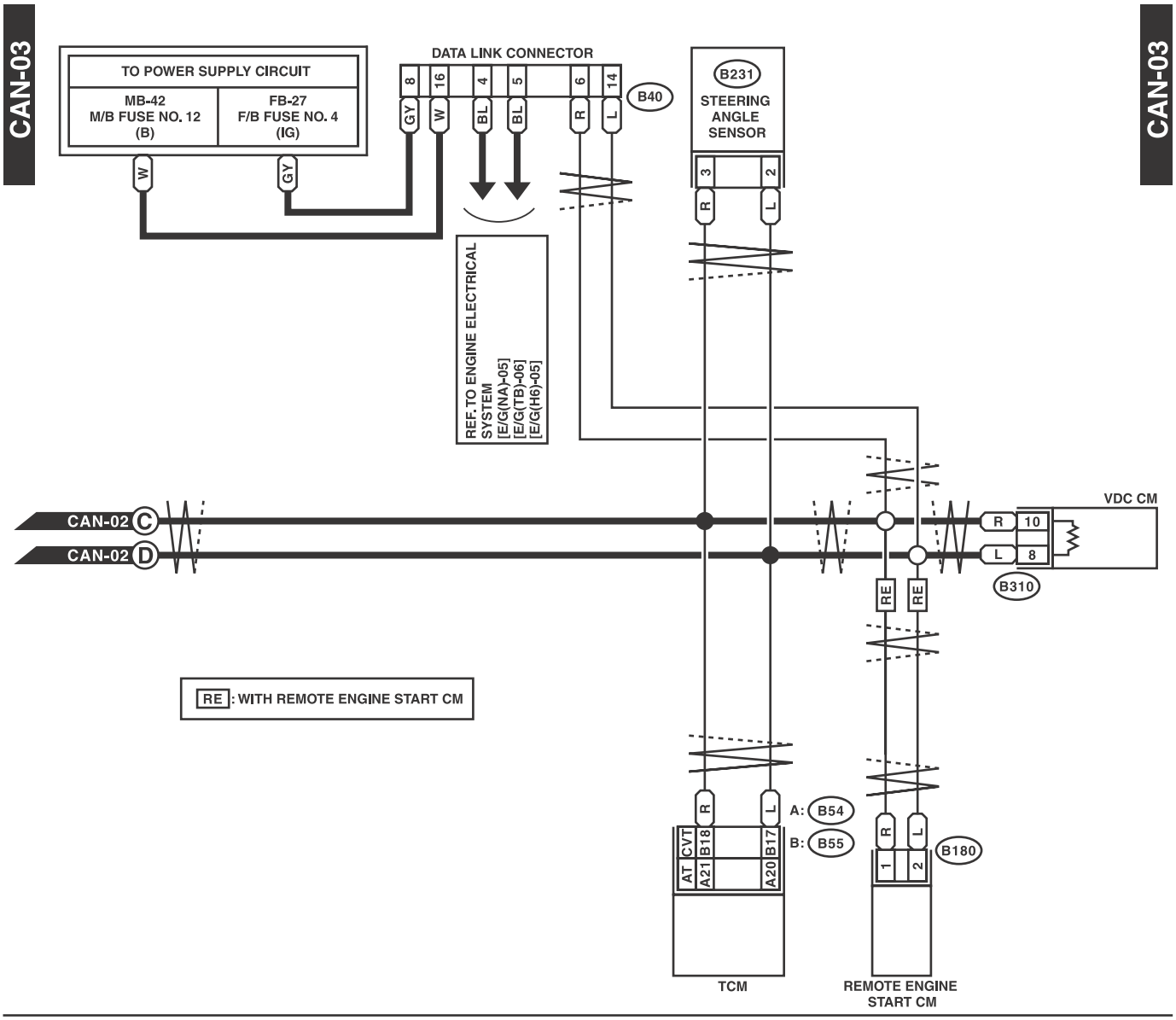
CAN-03
CAN-03
TO POWER SUPPLY CIRCUIT
MB-42
M/B FUSE NO. 12
(B)
FB-27
F/B FUSE NO. 4
(IG)
DATA LINK CONNECTOR
B40
B231
STEERING ANGLE SENSOR
REF. TO ENGINE ELECTRICAL SYSTEM
[E/G(NA)-05]
[E/G(TB)-06]
[E/G(H6)-05]
CAN-02 C
CAN-02 D
VDC CM
B310
RE: WITH REMOTE ENGINE START CM
A: B54
B: B55
B180
TCM
REMOTE ENGINE START CM

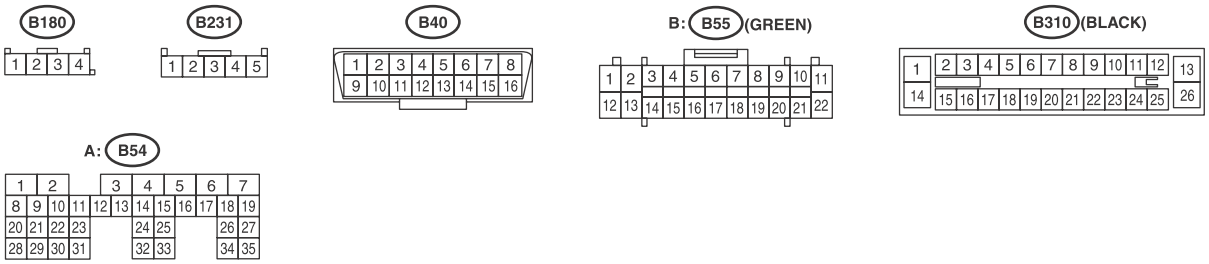
B180
B231
B40
B: B55 (GREEN)
B310 (BLACK)
A: B54

WI-25447

12.Charging System

A: WIRING DIAGRAM

CHG-01

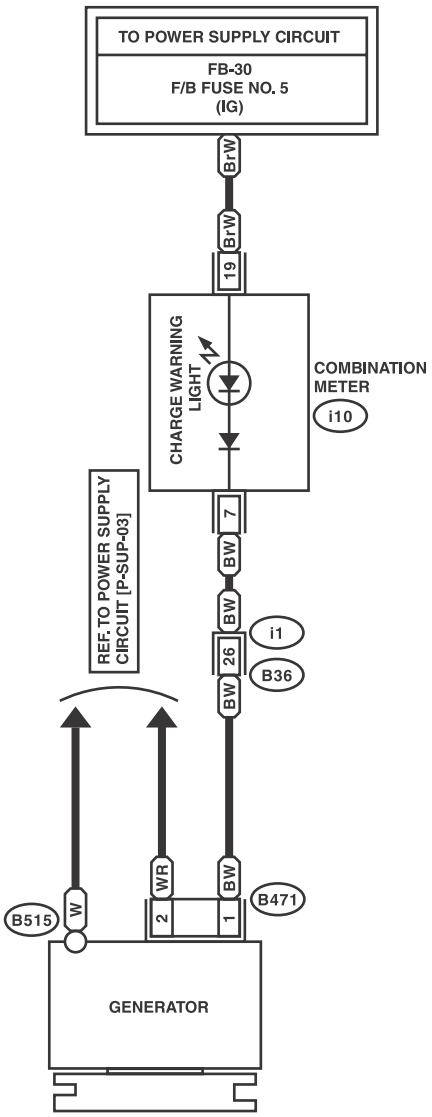

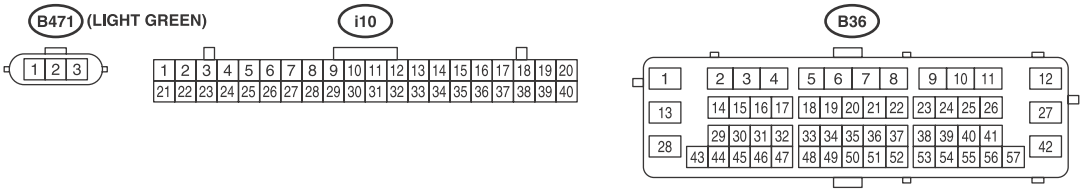

WI-25448

13.Clearance Light and Illumination Light System

A: WIRING DIAGRAM

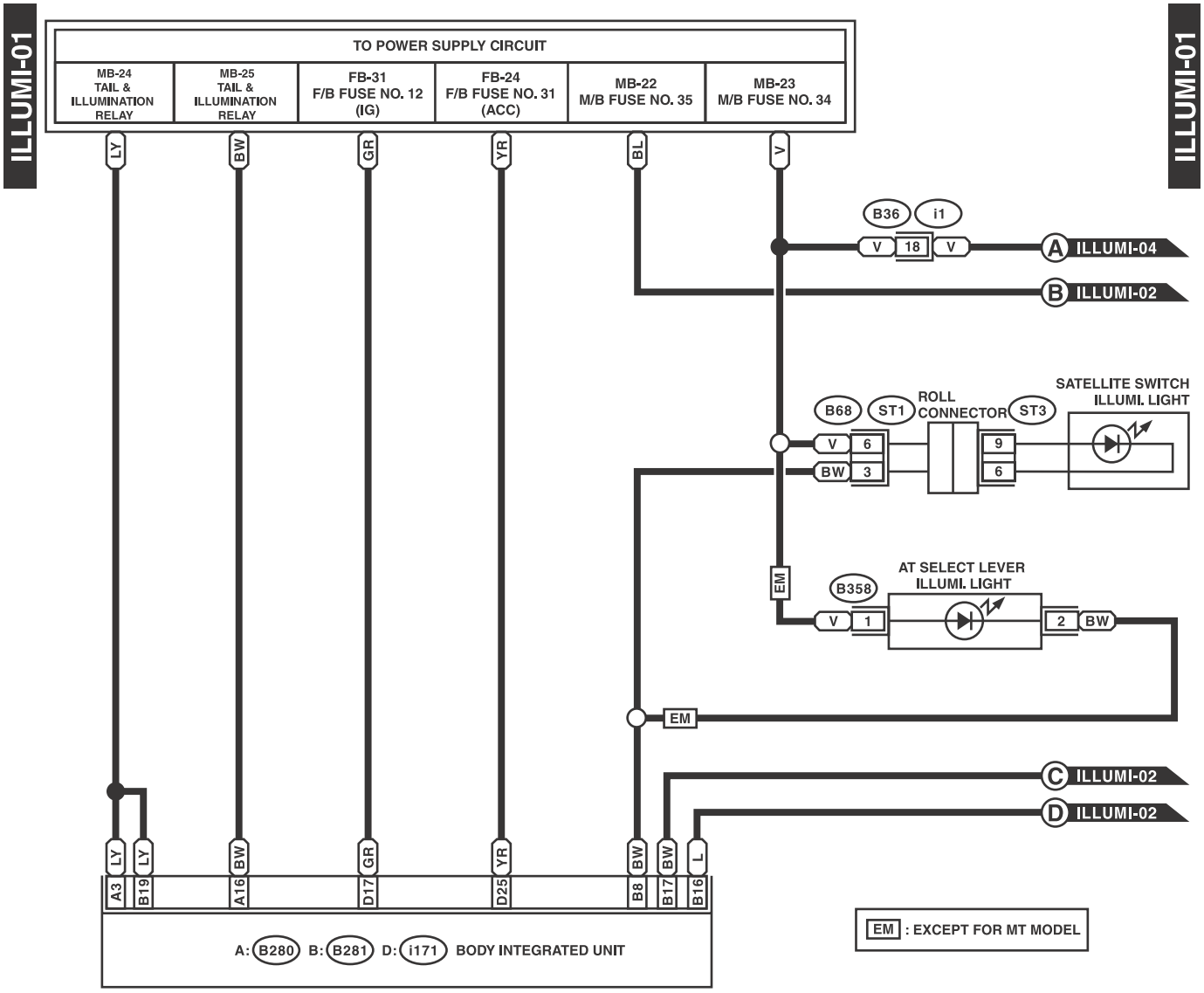

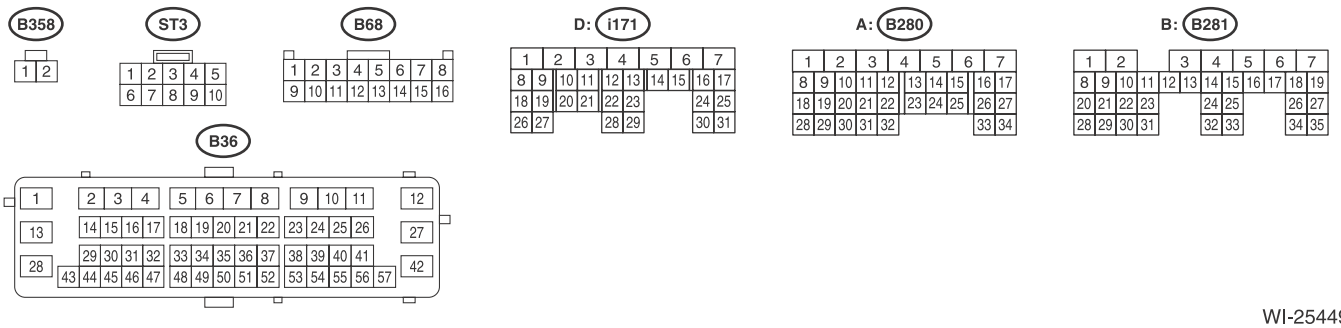

WI-25449

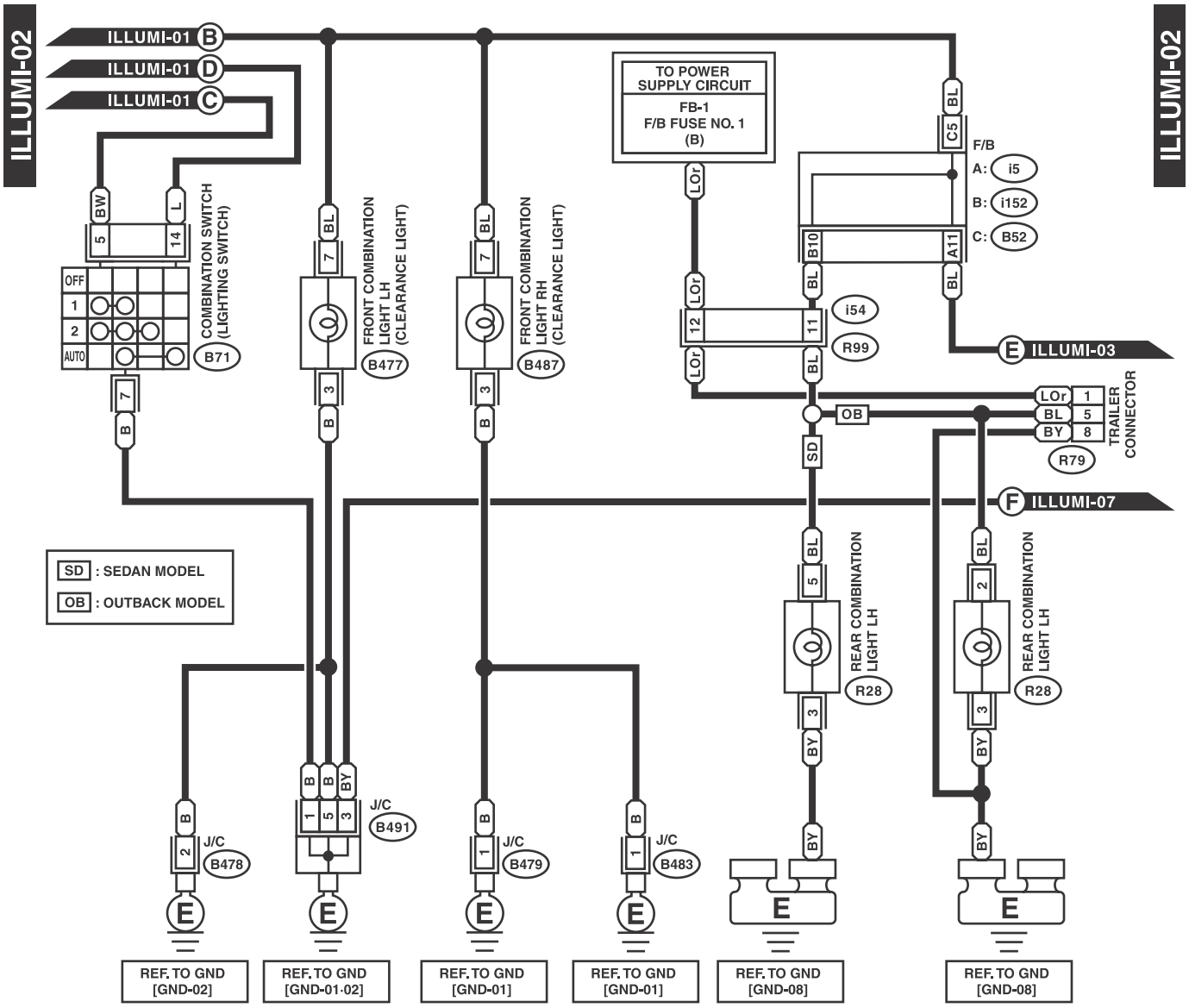
ILLUMI-02
ILLUMI-01 B
ILLUMI-01 D
ILLUMI-01 C
TO POWER SUPPLY CIRCUIT
FB-1
F/B FUSE NO. 1
(B)
F/B
A: i5
B: i152
C: B52
COMBINATION SWITCH (LIGHTING SWITCH)
B71
FRONT COMBINATION LIGHT LH (CLEARANCE LIGHT)
B477
FRONT COMBINATION LIGHT RH (CLEARANCE LIGHT)
B487
i54
R99
E ILLUMI-03
TRAILER CONNECTOR
R79
F ILLUMI-07
SD : SEDAN MODEL
OB : OUTBACK MODEL
REAR COMBINATION LIGHT LH
R28
J/C
B478
B491
B479
B483
REF. TO GND [GND-02]
REF. TO GND [GND-01·02]
REF. TO GND [GND-01]
REF. TO GND [GND-01]
REF. TO GND [GND-08]
REF. TO GND [GND-08]

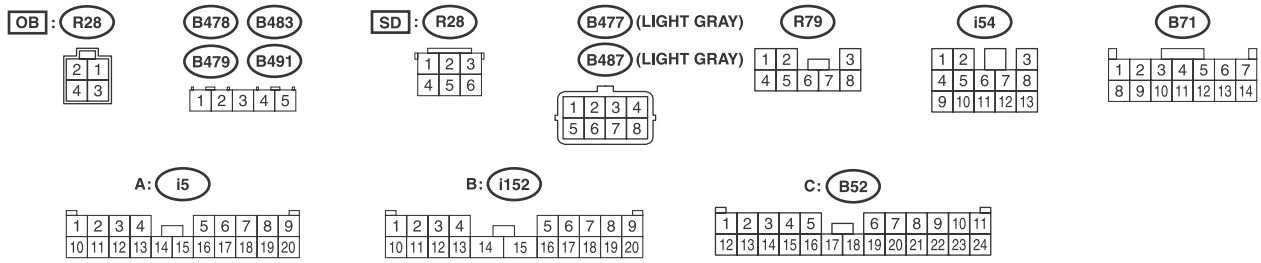
OB : R28
B478 B483
B479 B491
SD : R28
B477 (LIGHT GRAY)
B487 (LIGHT GRAY)
R79
i54
B71
A: i5
B: i152
C: B52

WI-25450

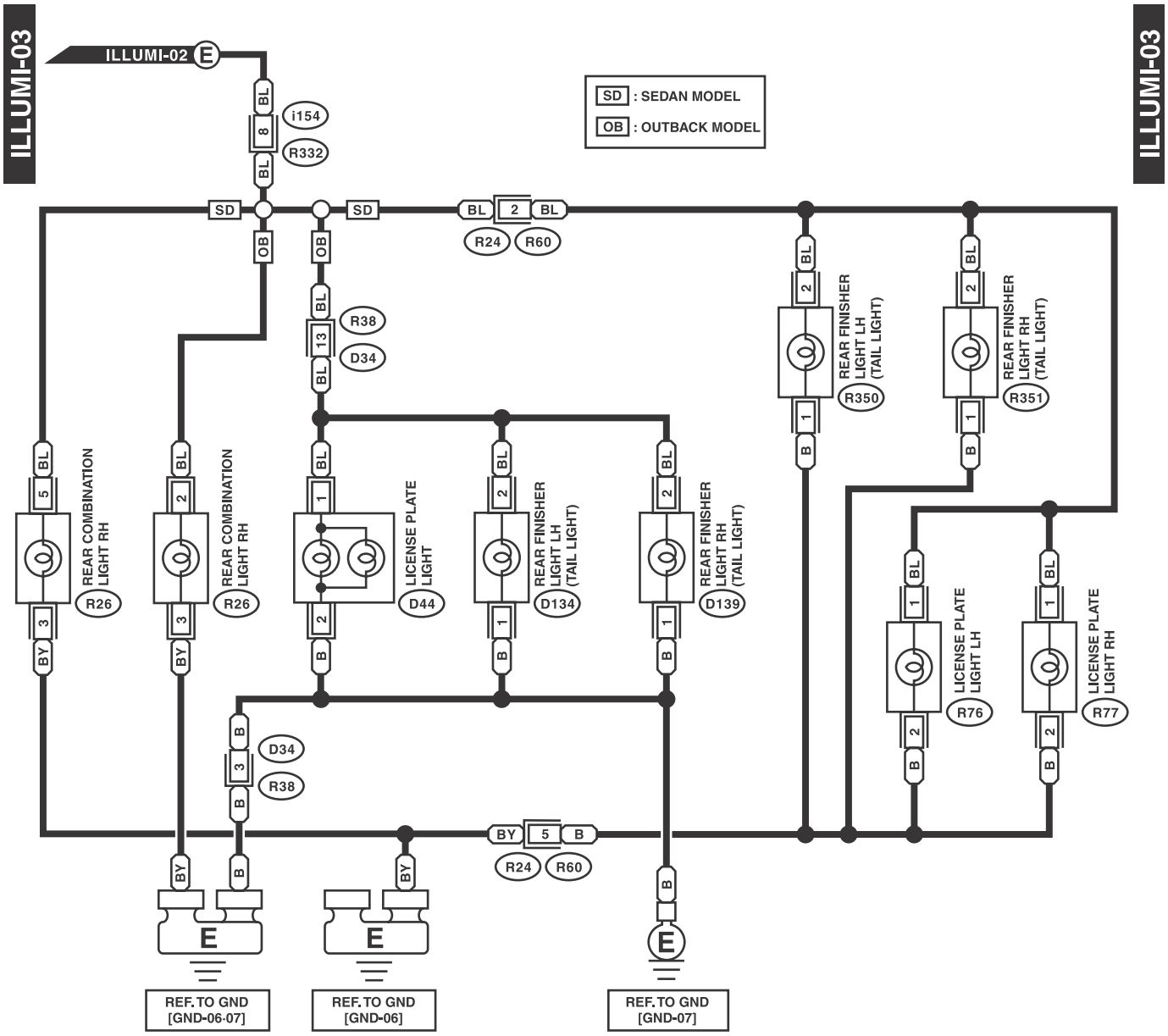
ILLUMI-03
ILLUMI-02
SD : SEDAN MODEL
OB : OUTBACK MODEL
i154
R332
R24
R60
R38
D34
REAR COMBINATION LIGHT RH
R26
LICENSE PLATE LIGHT
D44
REAR FINISHER LIGHT LH (TAIL LIGHT)
D134
REAR FINISHER LIGHT RH (TAIL LIGHT)
D139
R350
R351
LICENSE PLATE LIGHT LH
R76
LICENSE PLATE LIGHT RH
R77
REF. TO GND [GND-06·07]
REF. TO GND [GND-06]
REF. TO GND [GND-07]

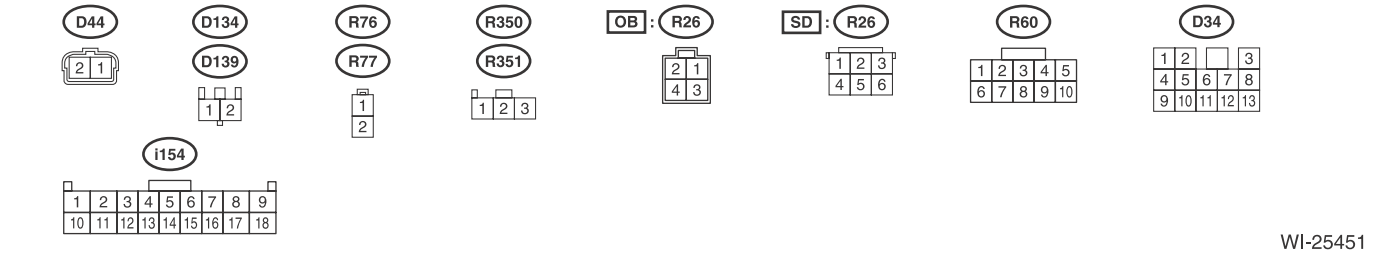
D44
D134
D139
R76
R77
R350
R351
OB : R26
SD : R26
R60
D34
i154

WI-25451

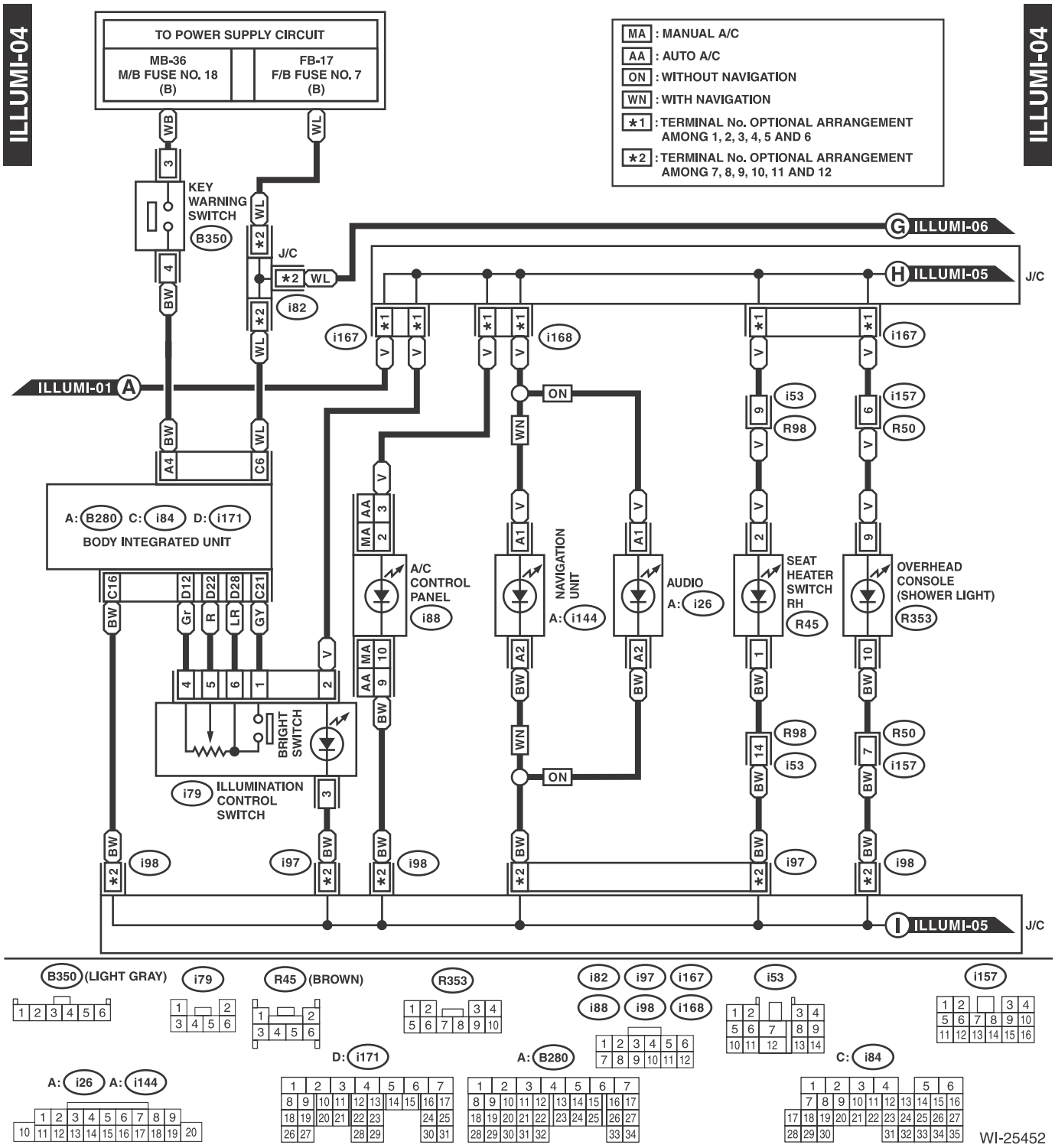
ILLUMI-04
ILLUMI-04
TO POWER SUPPLY CIRCUIT
MB-36
M/B FUSE NO. 18
(B)
FB-17
F/B FUSE NO. 7
(B)
MA : MANUAL A/C
AA : AUTO A/C
ON : WITHOUT NAVIGATION
WN : WITH NAVIGATION
*1 : TERMINAL No. OPTIONAL ARRANGEMENT AMONG 1, 2, 3, 4, 5 AND 6
*2 : TERMINAL No. OPTIONAL ARRANGEMENT AMONG 7, 8, 9, 10, 11 AND 12
KEY WARNING SWITCH
B350
J/C
i82
G ILLUMI-06
H ILLUMI-05
J/C
i167
i168
i167
ILLUMI-01 A
ON
i53
R98
i157
R50
A: B280 C: i84 D: i171
BODY INTEGRATED UNIT
A/C CONTROL PANEL
i88
NAVIGATION UNIT
A: i144
AUDIO
A: i26
SEAT HEATER SWITCH RH
R45
OVERHEAD CONSOLE (SHOWER LIGHT)
R353
BRIGHT SWITCH
i79
ILLUMINATION CONTROL SWITCH
i98
i97
i98
i97
i98
I ILLUMI-05
J/C
B350 (LIGHT GRAY)
i79
R45 (BROWN)
R353
i82
i97
i167
i88
i98
i168
i53
i157
A: i26
A: i144
D: i171
A: B280
C: i84
WI-25452

ILLUMI-05

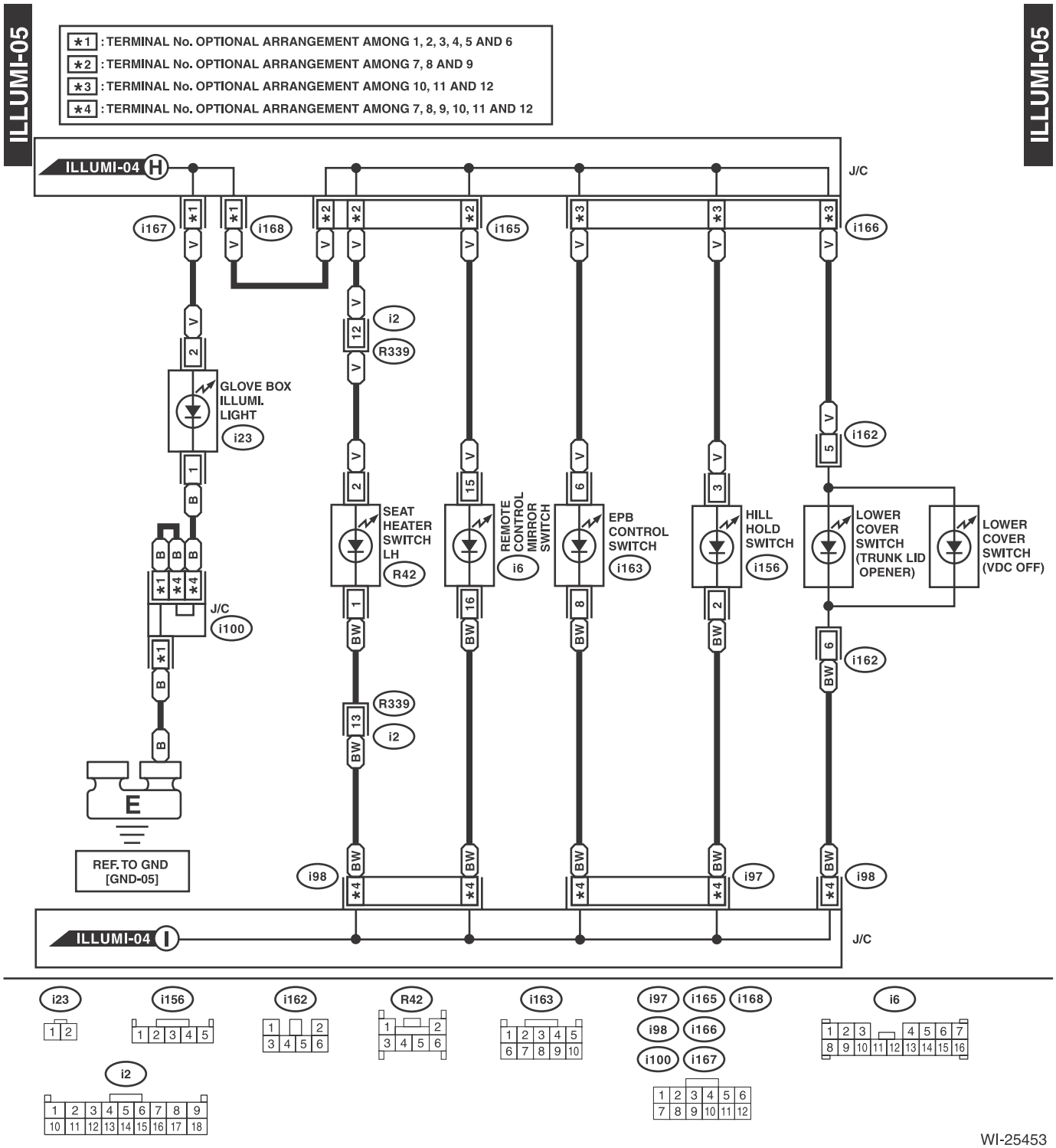

WI-25453

ILLUMI-06

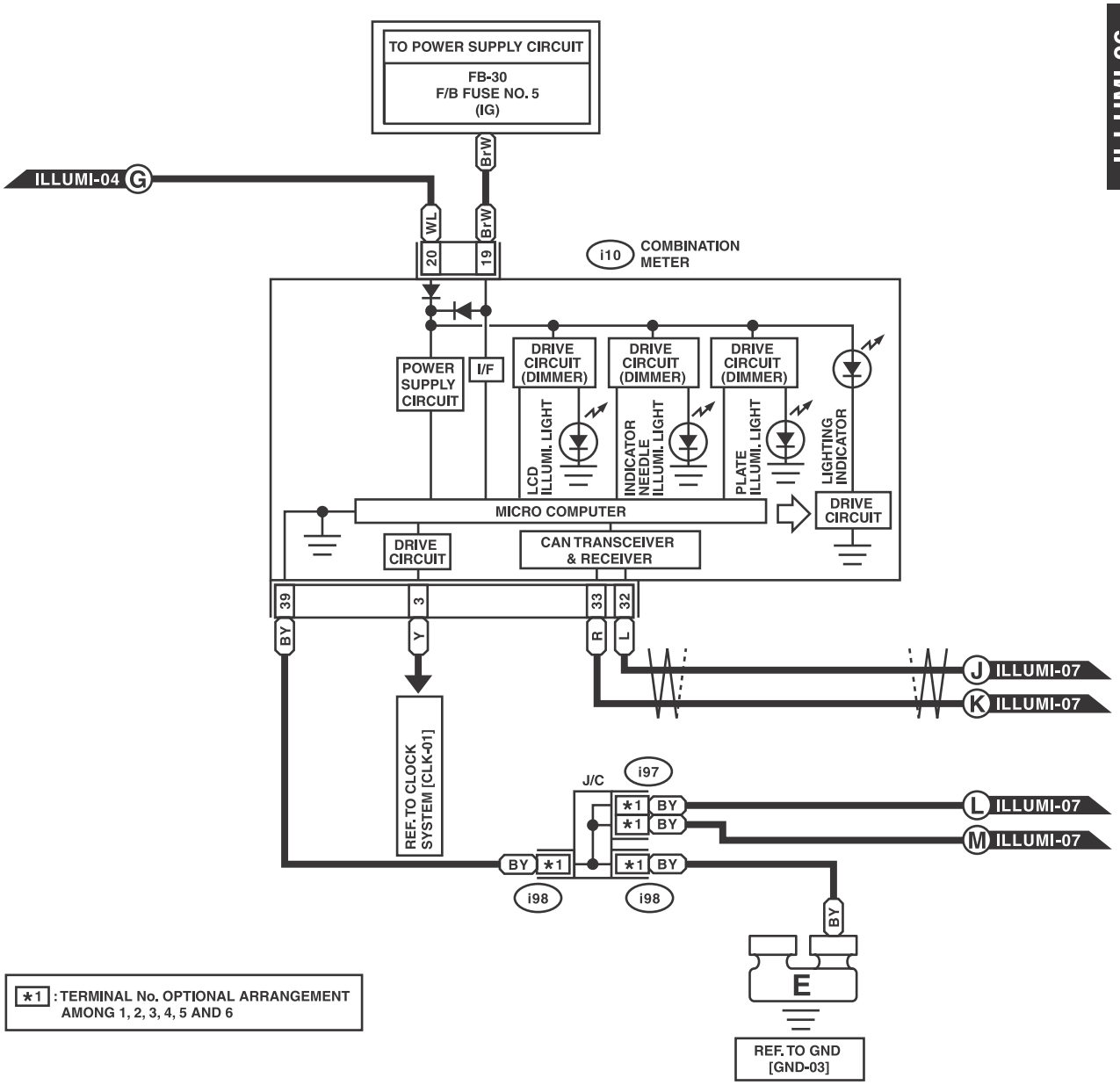

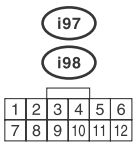

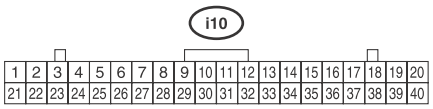

WI-25454

ILLUMI-07

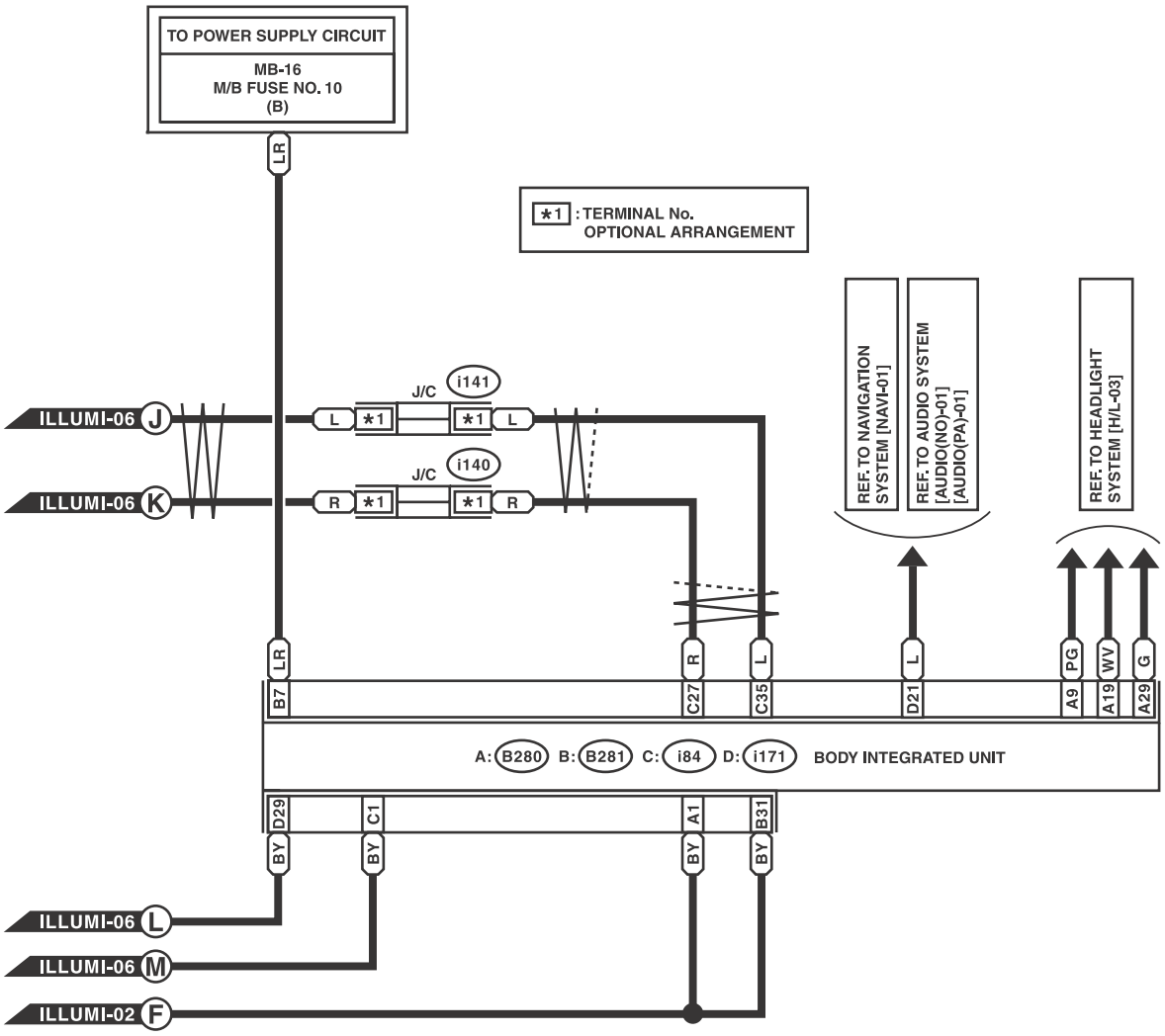

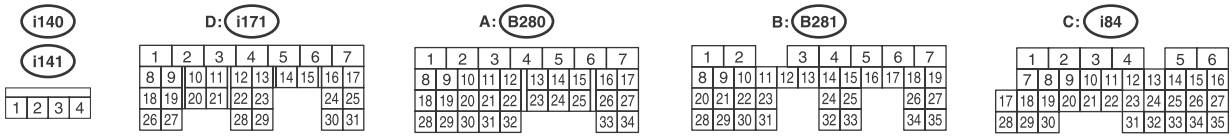

WI-25455

14.Clock System

A: WIRING DIAGRAM

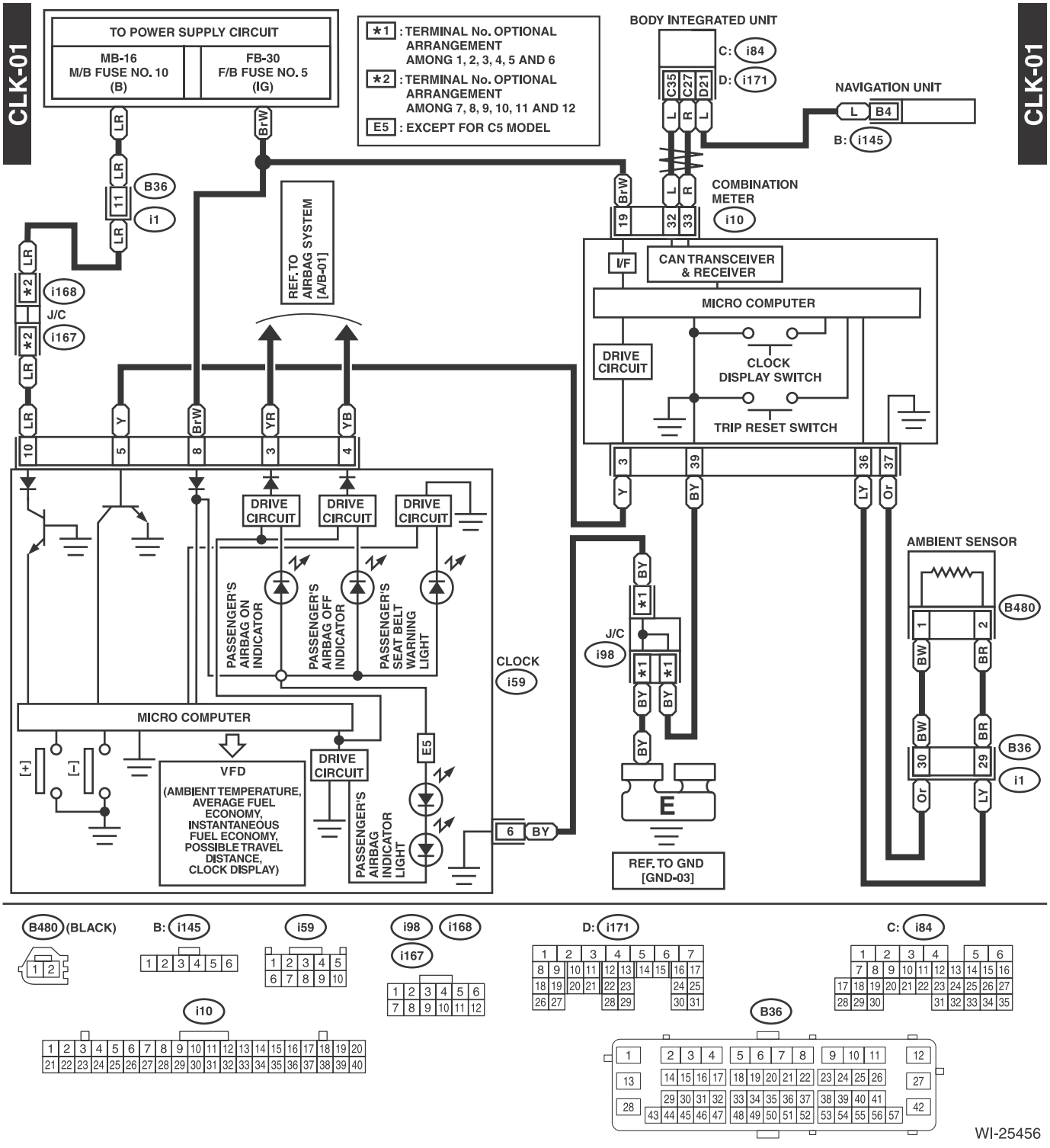

WI-25456

15.Combination Meter System

A: WIRING DIAGRAM

C/M-01

C/M-01

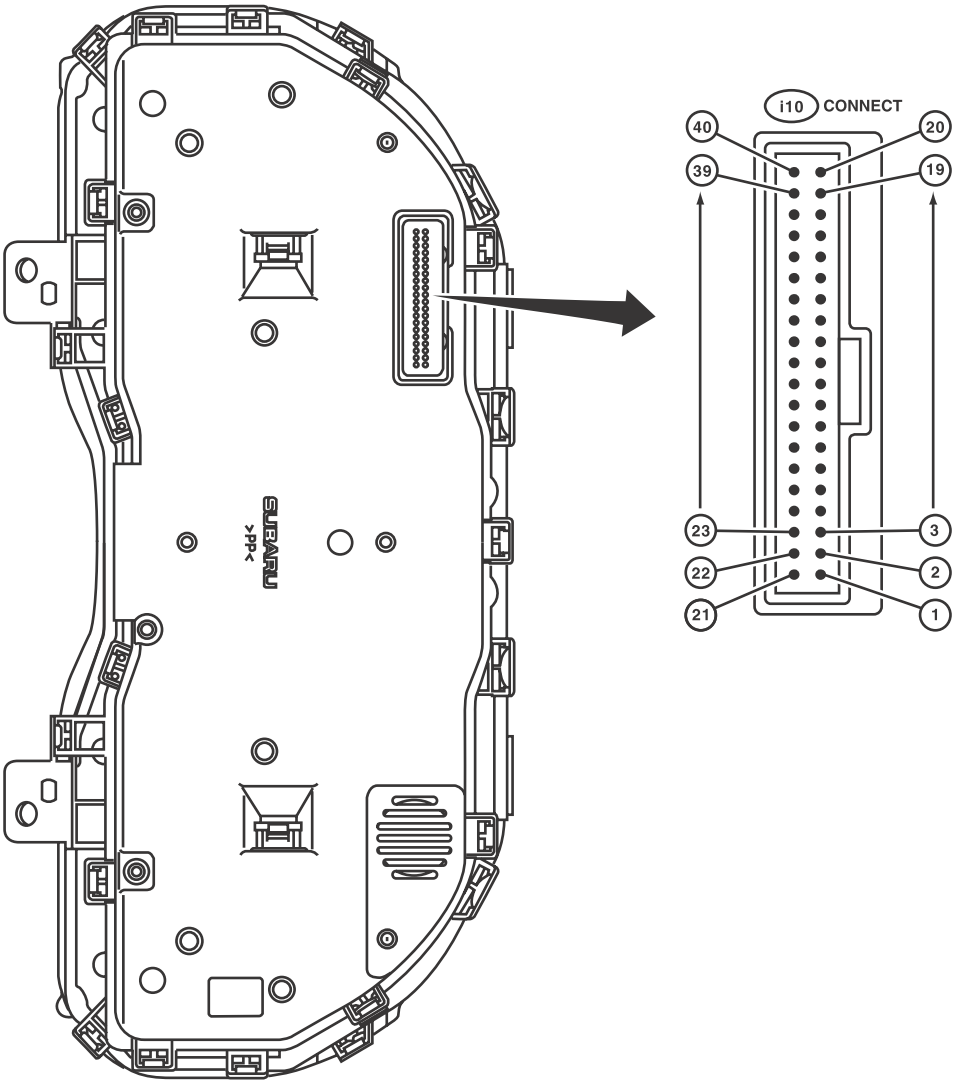

WI-25457

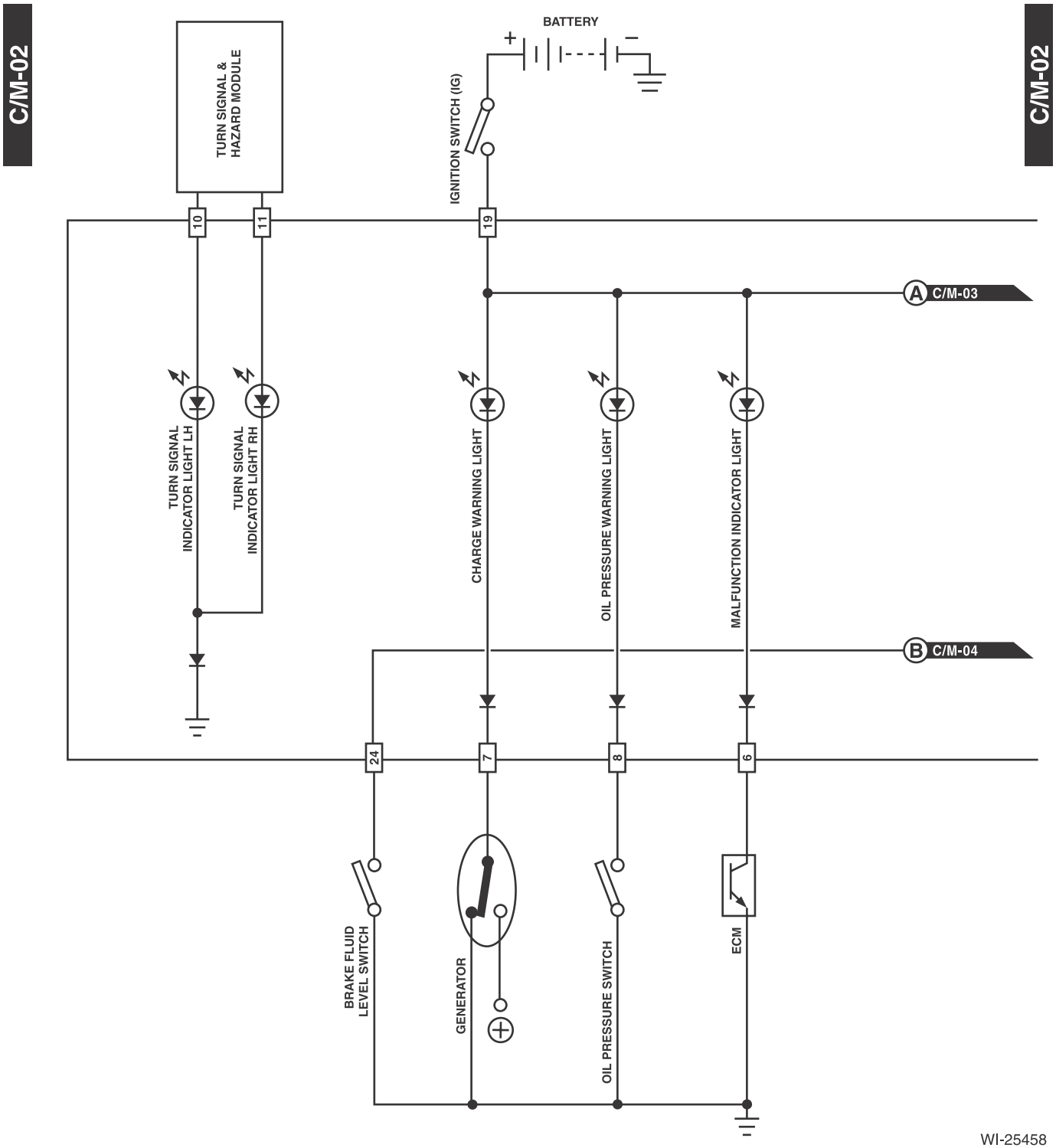
C/M-02
C/M-02
BATTERY
+
−
TURN SIGNAL & HAZARD MODULE
IGNITION SWITCH (IG)
10
11
19
A C/M-03
TURN SIGNAL INDICATOR LIGHT LH
TURN SIGNAL INDICATOR LIGHT RH
CHARGE WARNING LIGHT
OIL PRESSURE WARNING LIGHT
MALFUNCTION INDICATOR LIGHT
B C/M-04
24
7
8
6
BRAKE FLUID LEVEL SWITCH
GENERATOR
OIL PRESSURE SWITCH
ECM
WI-25458

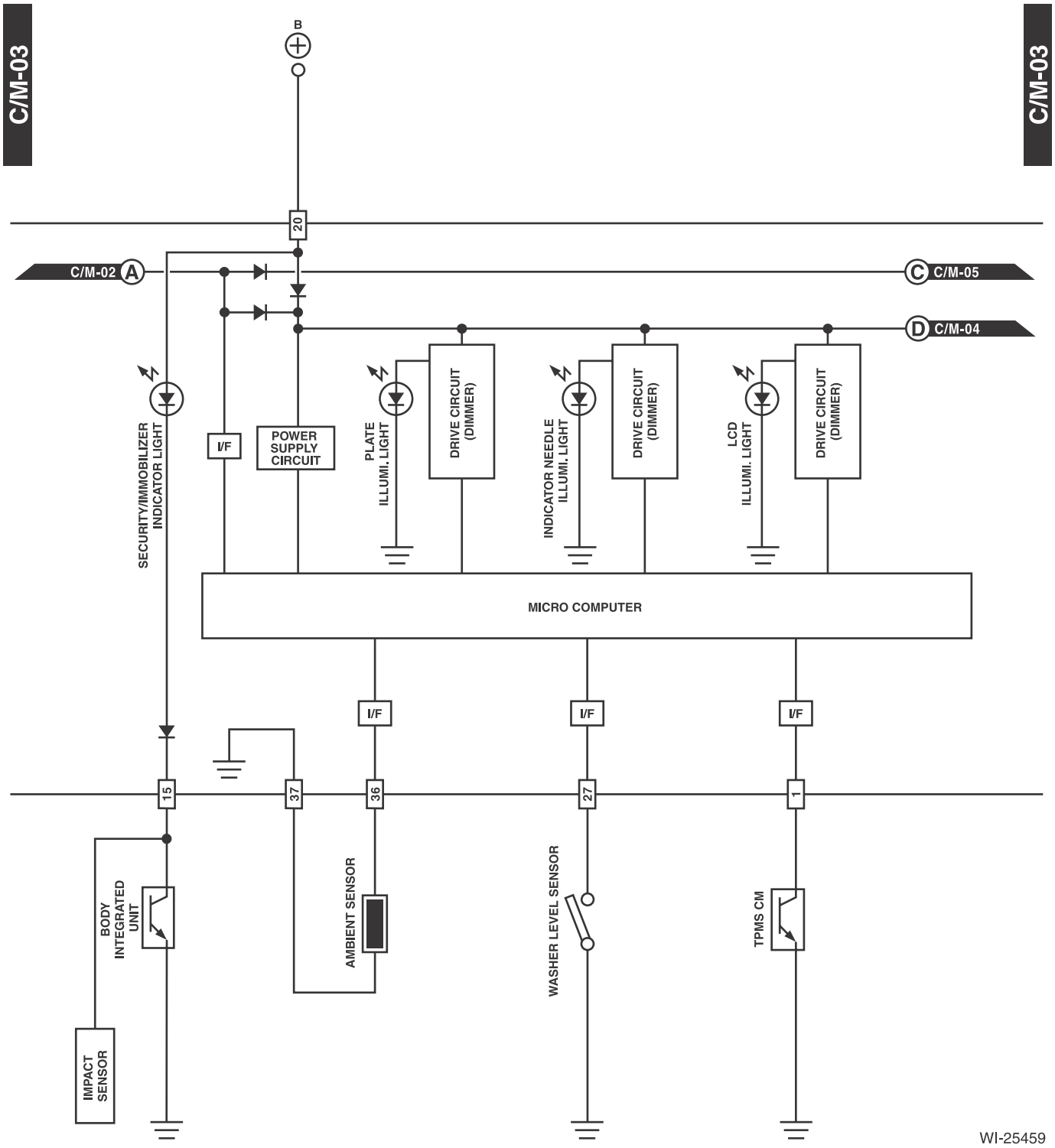
C/M-03
C/M-03
B
20
C/M-02 A
C C/M-05
D C/M-04
SECURITY/IMMOBILIZER INDICATOR LIGHT
I/F
POWER SUPPLY CIRCUIT
PLATE ILLUMI. LIGHT
DRIVE CIRCUIT (DIMMER)
INDICATOR NEEDLE ILLUMI. LIGHT
DRIVE CIRCUIT (DIMMER)
LCD ILLUMI. LIGHT
DRIVE CIRCUIT (DIMMER)
MICRO COMPUTER
I/F
I/F
I/F
15
37
36
27
1
BODY INTEGRATED UNIT
AMBIENT SENSOR
WASHER LEVEL SENSOR
TPMS CM
IMPACT SENSOR
WI-25459

C/M-04

*1 : SPORT SHIFT
HIGH ENGINE OIL TEMPERATURE
CUSTOMIZED
SEAT BELT
EPB
KEY WARNING
HEADLIGHT WARNING

SC : WITH SECURITY CM
PA : PREMIUM AUDIO MODEL
WN : WITH NAVIGATION
WS : WITH SUNROOF

C/M-04

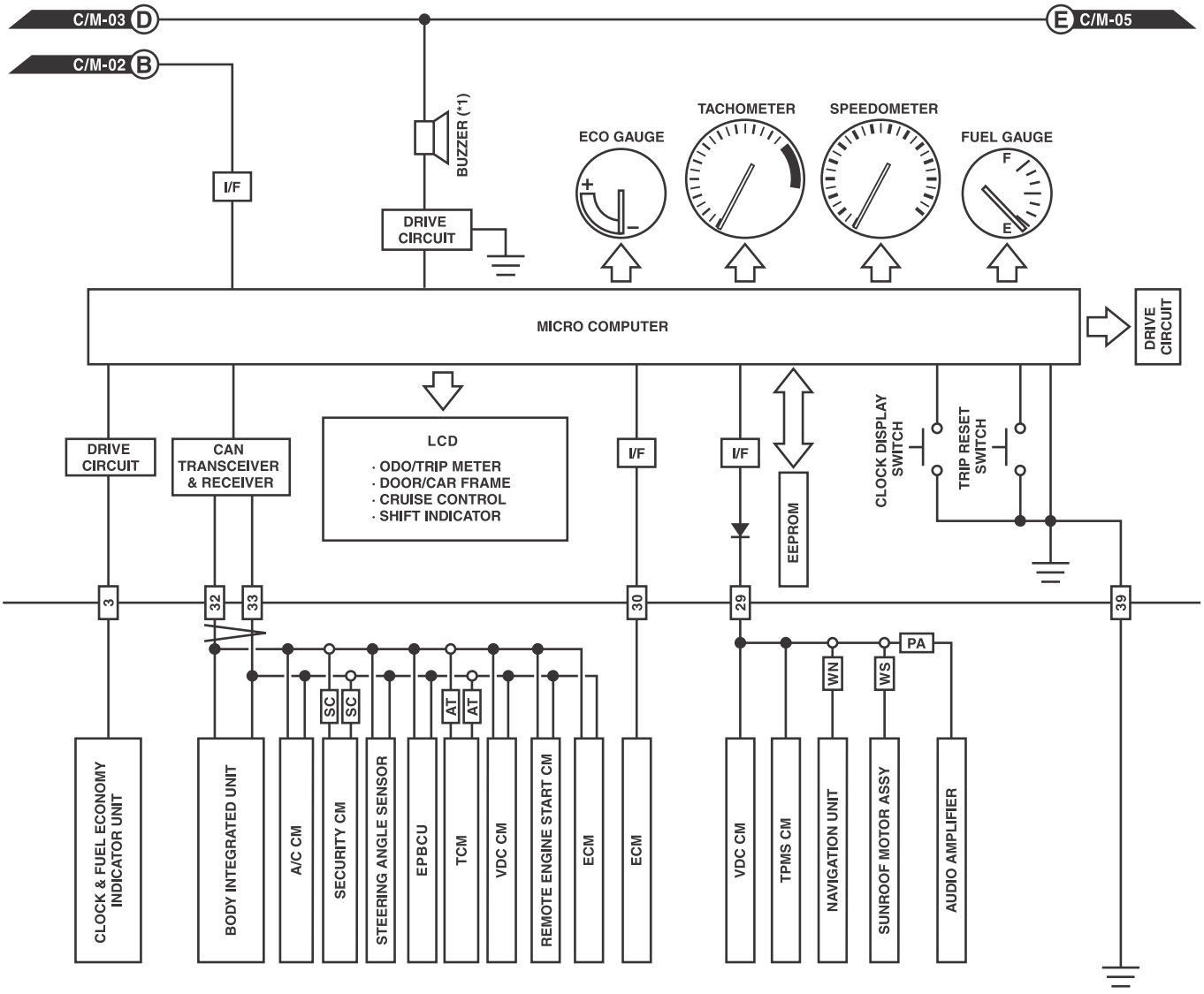

WI-25460

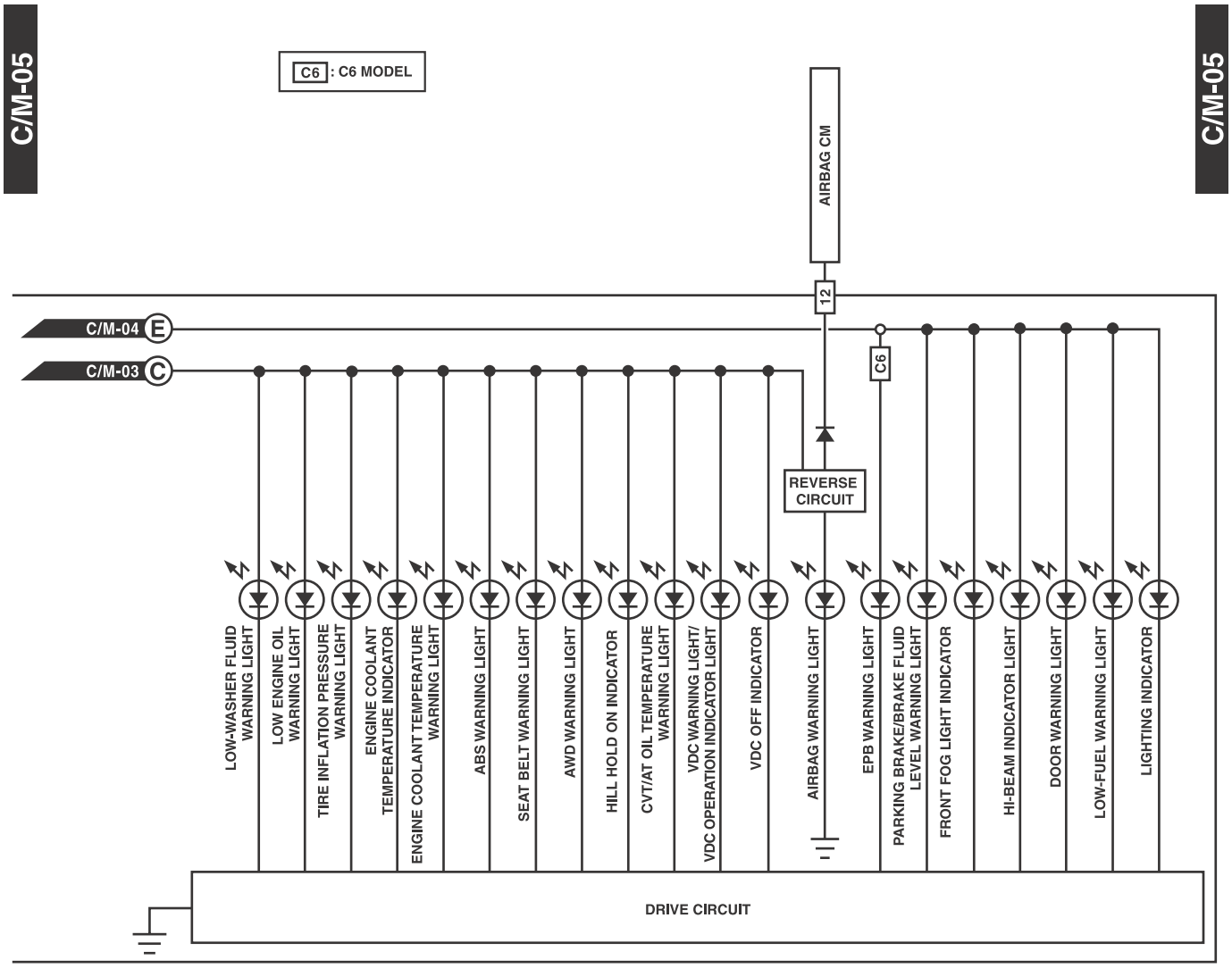
C/M-05
C/M-05
C6 : C6 MODEL
AIRBAG CM
12
C6
C/M-04 E
C/M-03 C
REVERSE CIRCUIT
LOW-WASHER FLUID WARNING LIGHT
LOW ENGINE OIL WARNING LIGHT
TIRE INFLATION PRESSURE WARNING LIGHT
ENGINE COOLANT TEMPERATURE INDICATOR
ENGINE COOLANT TEMPERATURE WARNING LIGHT
ABS WARNING LIGHT
SEAT BELT WARNING LIGHT
AWD WARNING LIGHT
HILL HOLD ON INDICATOR
CVT/AT OIL TEMPERATURE WARNING LIGHT
VDC WARNING LIGHT/ VDC OPERATION INDICATOR LIGHT
VDC OFF INDICATOR
AIRBAG WARNING LIGHT
EPB WARNING LIGHT
PARKING BRAKE/BRAKE FLUID LEVEL WARNING LIGHT
FRONT FOG LIGHT INDICATOR
HI-BEAM INDICATOR LIGHT
DOOR WARNING LIGHT
LOW-FUEL WARNING LIGHT
LIGHTING INDICATOR
DRIVE CIRCUIT

WI-25461

16.Coolant Temperature System

A: WIRING DIAGRAM

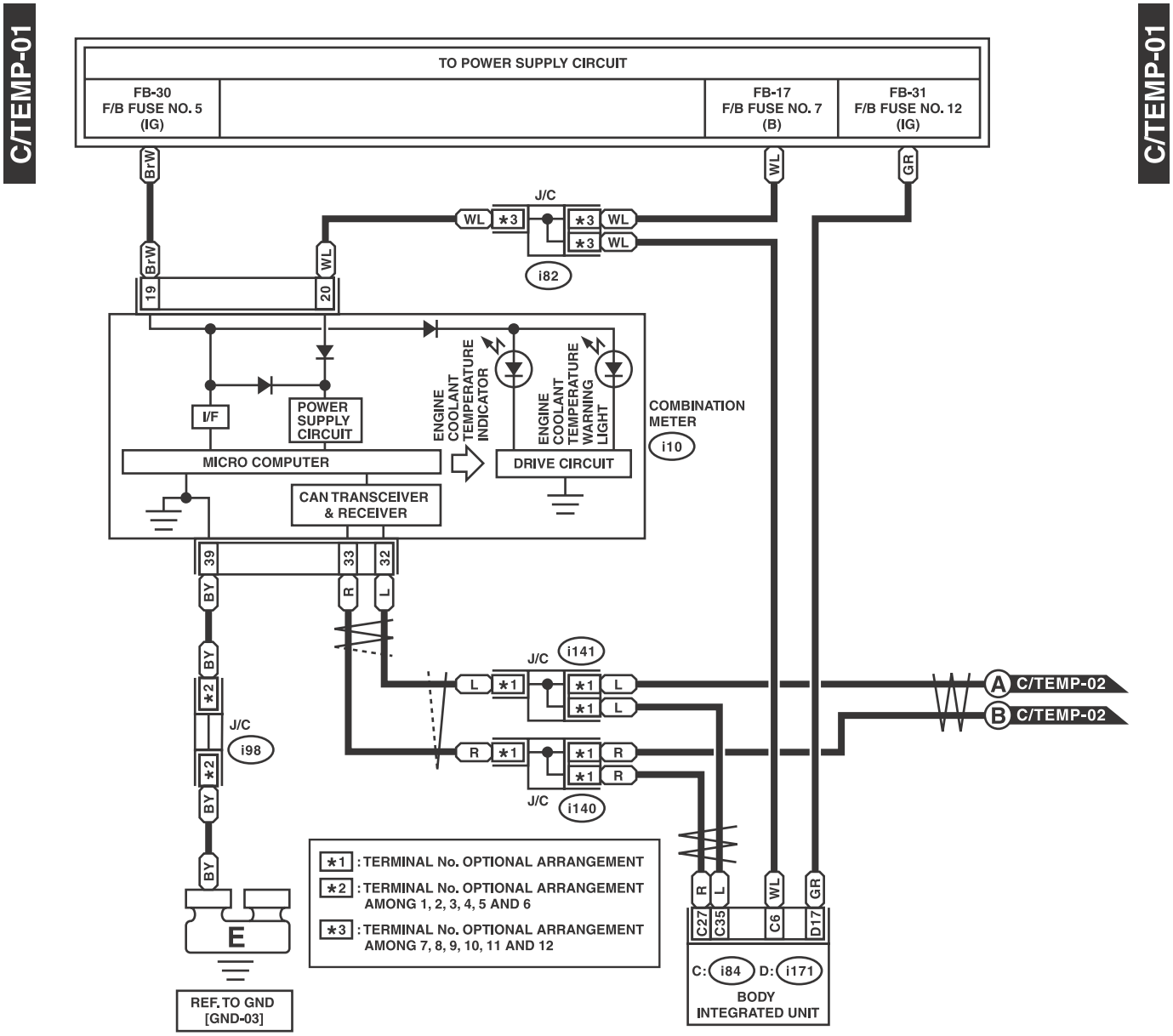

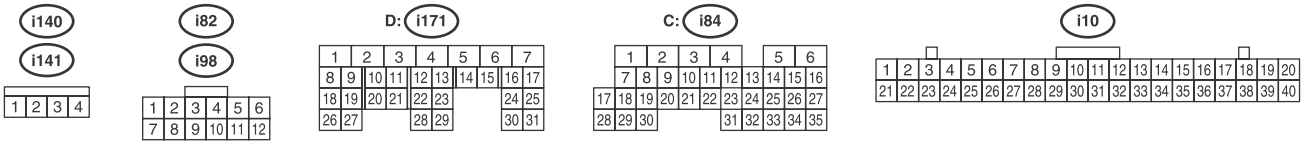

WI-25462

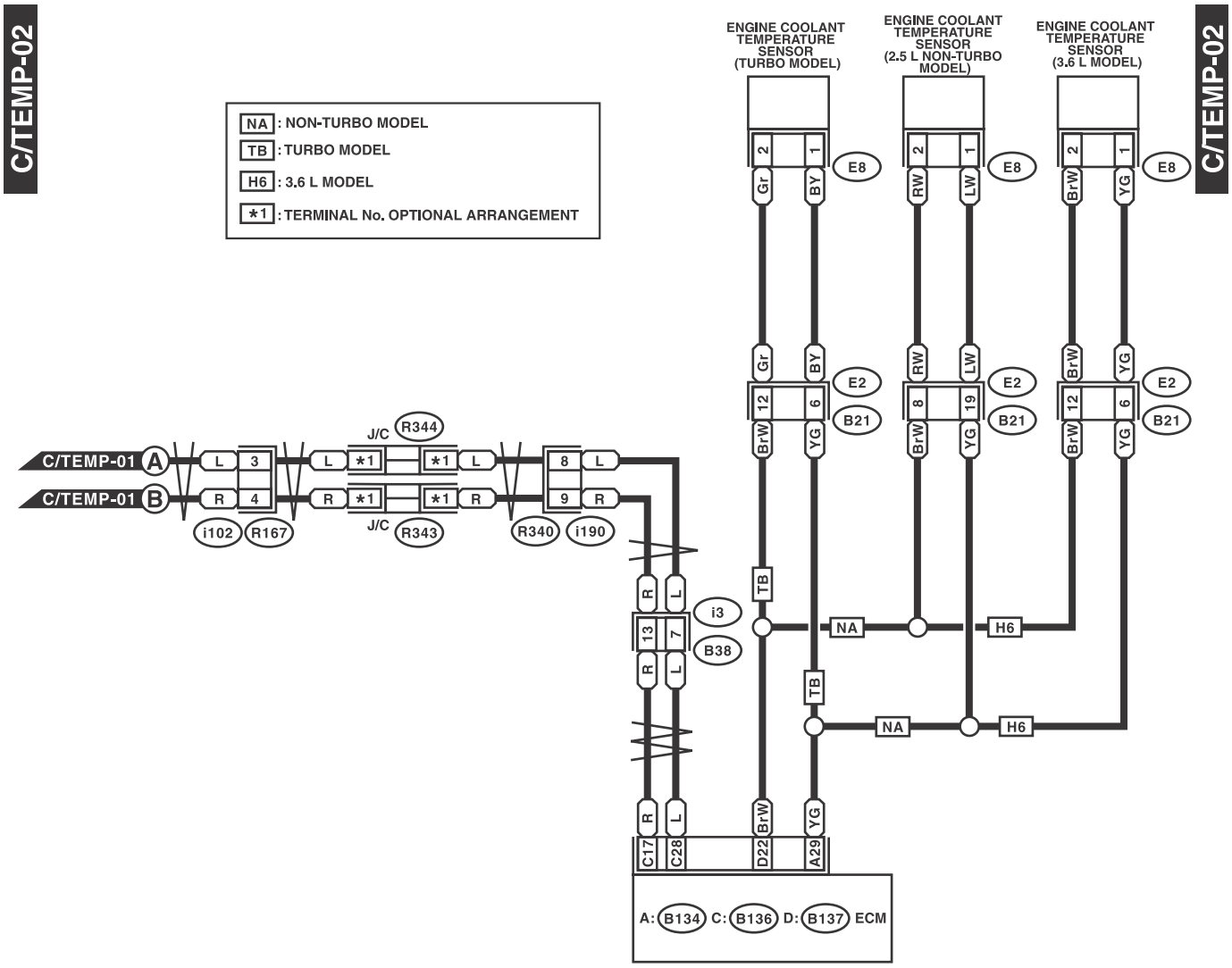
C/TEMP-02
C/TEMP-02
NA : NON-TURBO MODEL
TB : TURBO MODEL
H6 : 3.6 L MODEL
*1 : TERMINAL No. OPTIONAL ARRANGEMENT
ENGINE COOLANT TEMPERATURE SENSOR (TURBO MODEL)
ENGINE COOLANT TEMPERATURE SENSOR (2.5 L NON-TURBO MODEL)
ENGINE COOLANT TEMPERATURE SENSOR (3.6 L MODEL)
E8
E2
B21
B38
i3
C/TEMP-01 A
C/TEMP-01 B
J/C R344
J/C R343
i102
R167
R340
i190
NA
H6
TB
A: B134 C: B136 D: B137 ECM

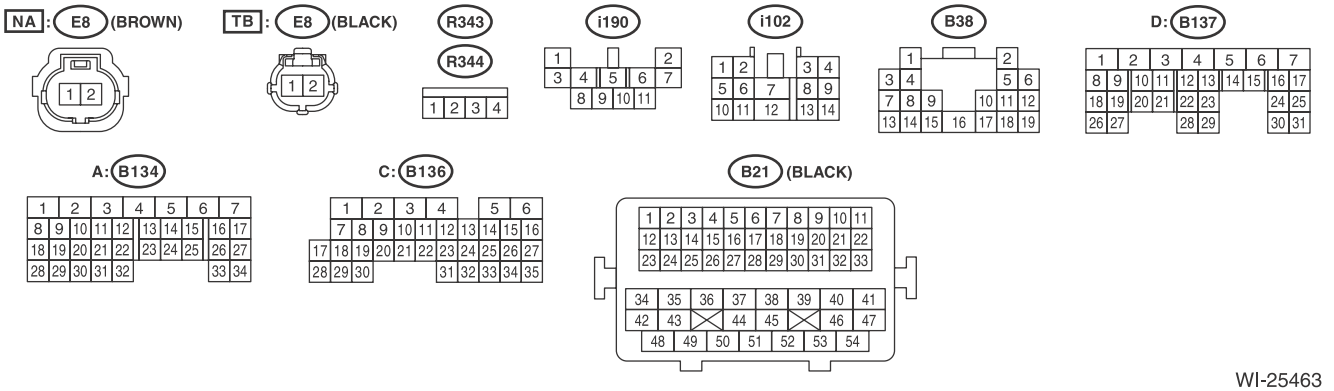
NA : E8 (BROWN)
TB : E8 (BLACK)
R343
R344
i190
i102
B38
D: B137
A: B134
C: B136
B21 (BLACK)

WI-25463

17.Cruise Control System

A: WIRING DIAGRAM

1. 2.5 L NON-TURBO MODEL

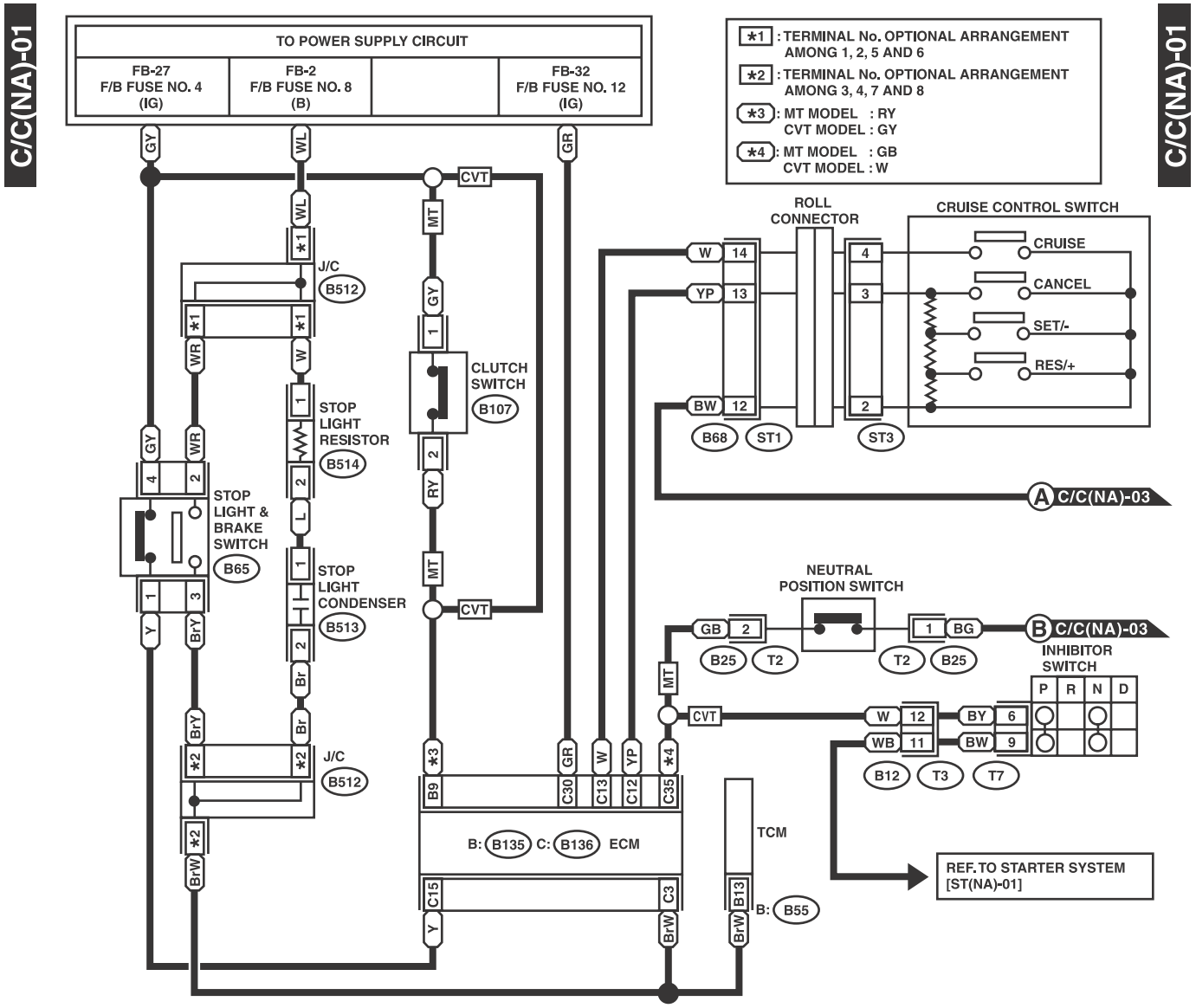

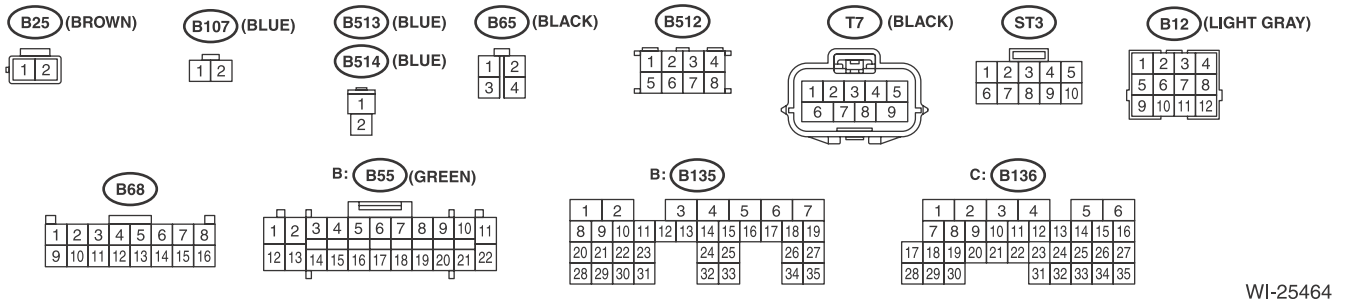

WI-25464

C/C(NA)-02

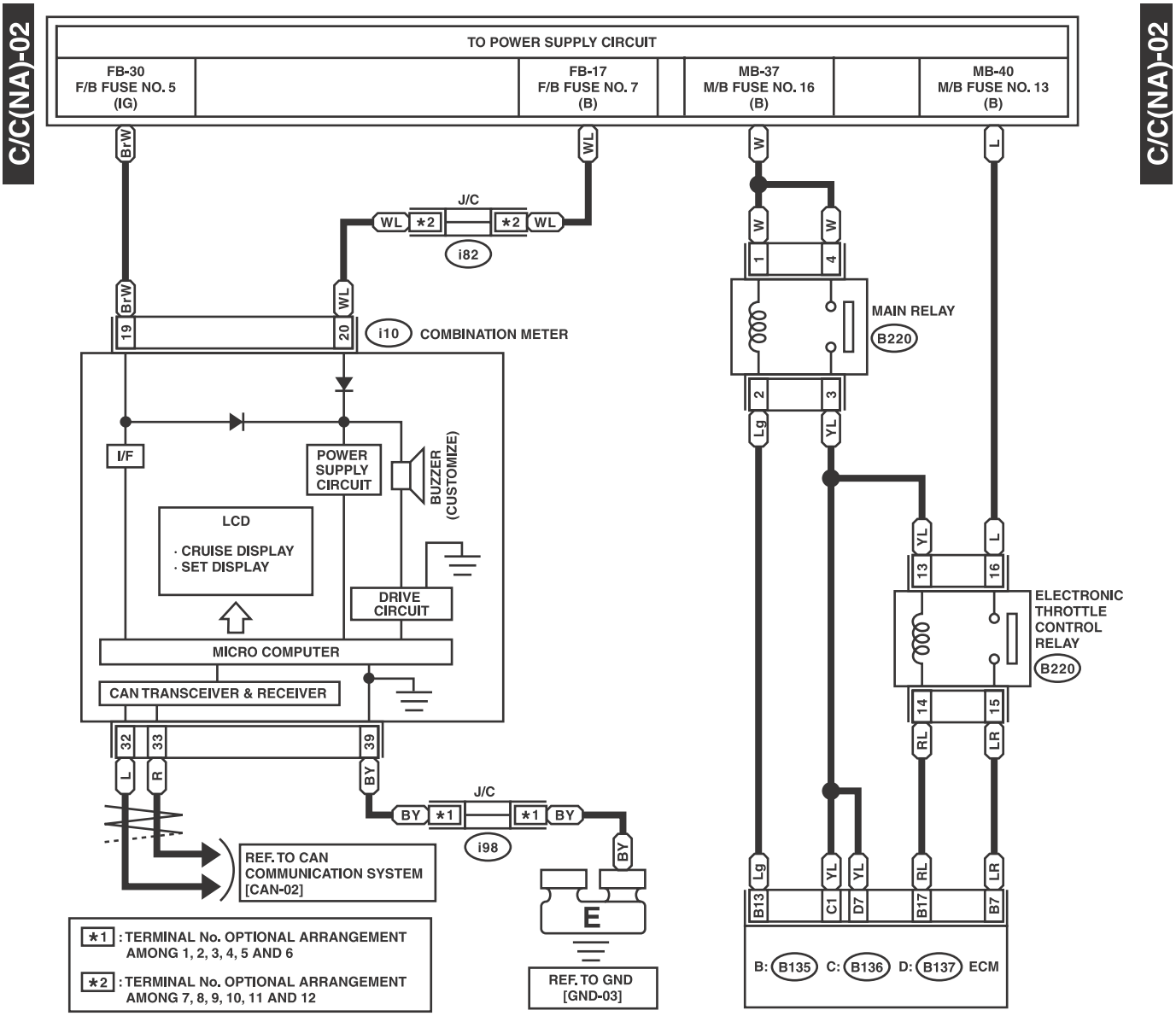

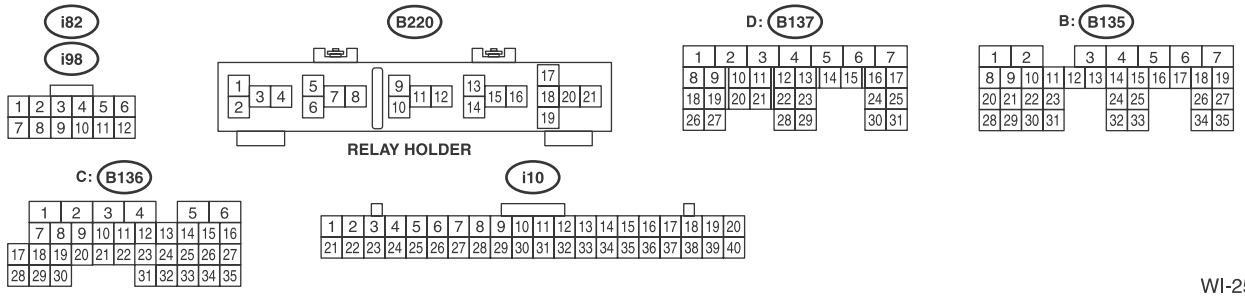

WI-25465

C/C(NA)-02

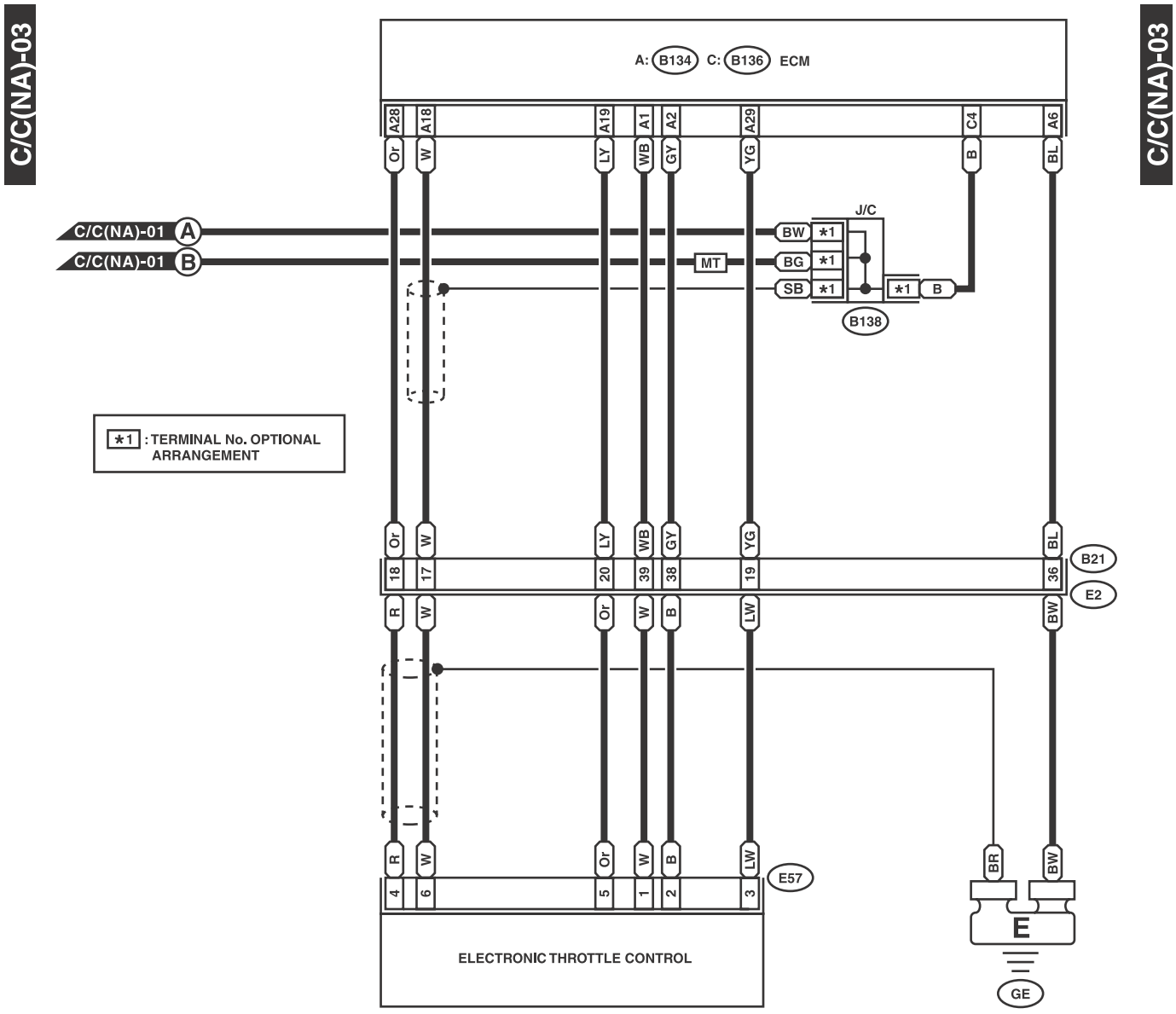
C/C(NA)-03
C/C(NA)-03
A: B134 C: B136 ECM
A28
A18
A19
A1
A2
A29
C4
A6
Or
W
LY
WB
GY
YG
B
BL
J/C
C/C(NA)-01 A
C/C(NA)-01 B
BW *1
BG *1
SB *1
MT
*1 B
B138
*1 : TERMINAL No. OPTIONAL ARRANGEMENT
18
17
20
39
38
19
36
B21
E2
R
W
Or
W
B
LW
BW
E57
4
6
5
1
2
3
BR
BW
E
GE
ELECTRONIC THROTTLE CONTROL

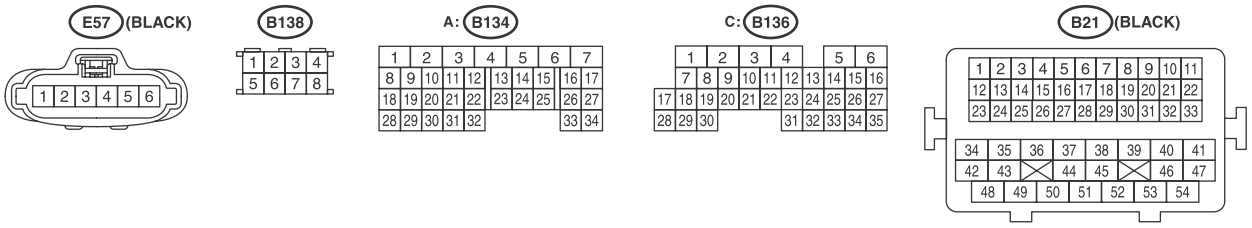
E57 (BLACK)
B138
A: B134
C: B136
B21 (BLACK)

WI-25466

2. EXCEPT FOR 2.5 L NON-TURBO MODEL

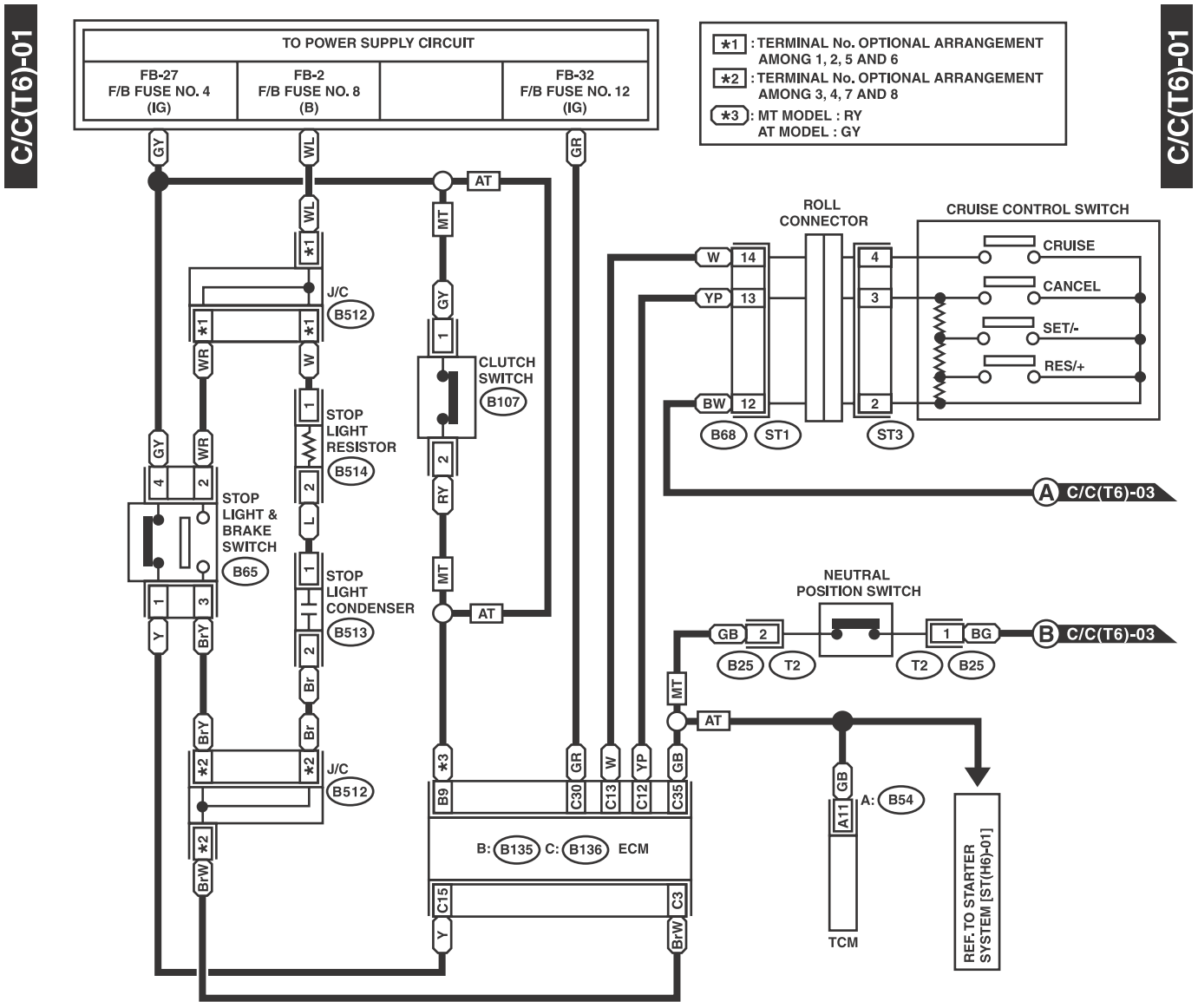

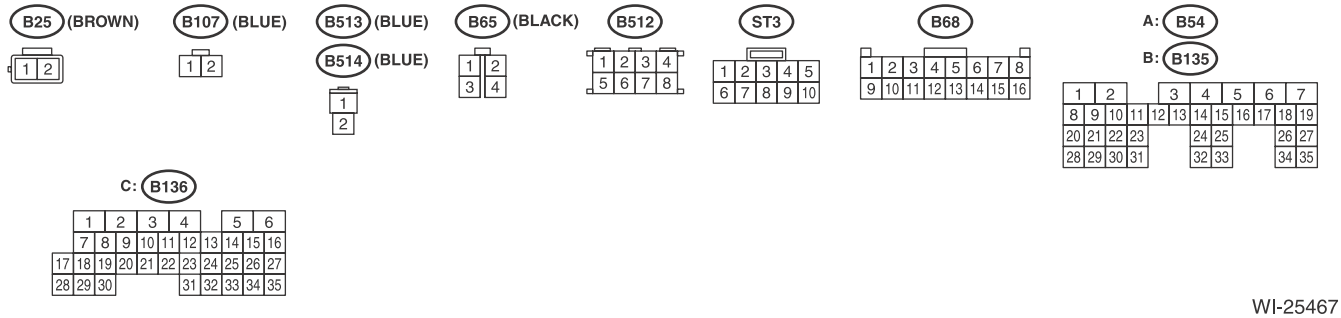

WI-25467

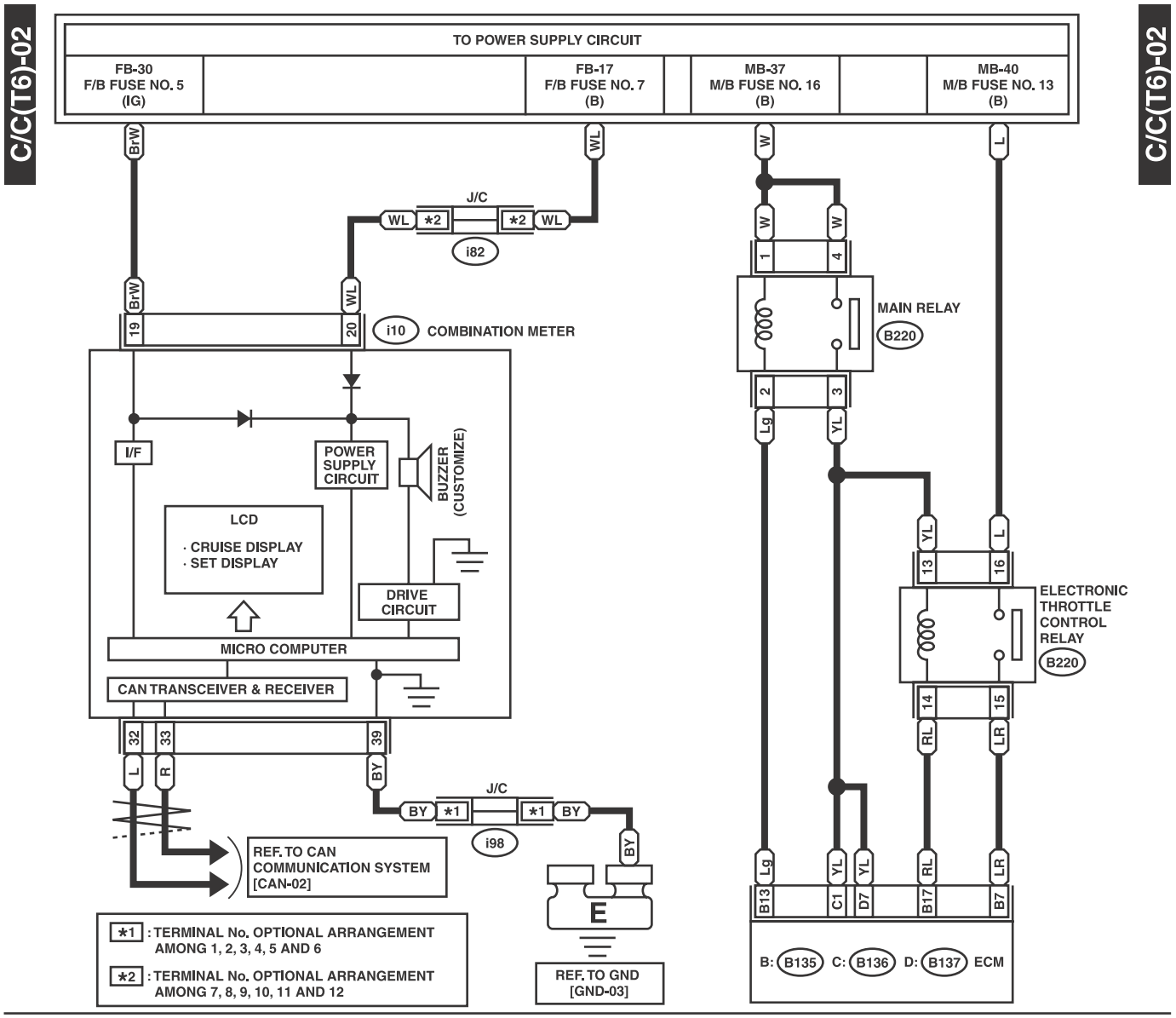
C/C(T6)-02
C/C(T6)-02
TO POWER SUPPLY CIRCUIT
FB-30
F/B FUSE NO. 5
(IG)
FB-17
F/B FUSE NO. 7
(B)
MB-37
M/B FUSE NO. 16
(B)
MB-40
M/B FUSE NO. 13
(B)
J/C
i82
i10
COMBINATION METER
MAIN RELAY
B220
I/F
POWER SUPPLY CIRCUIT
BUZZER (CUSTOMIZE)
LCD
· CRUISE DISPLAY
· SET DISPLAY
DRIVE CIRCUIT
MICRO COMPUTER
CAN TRANSCEIVER & RECEIVER
ELECTRONIC THROTTLE CONTROL RELAY
B220
i98
REF. TO CAN COMMUNICATION SYSTEM [CAN-02]
*1 : TERMINAL No. OPTIONAL ARRANGEMENT AMONG 1, 2, 3, 4, 5 AND 6
*2 : TERMINAL No. OPTIONAL ARRANGEMENT AMONG 7, 8, 9, 10, 11 AND 12
REF. TO GND [GND-03]
B: B135 C: B136 D: B137 ECM

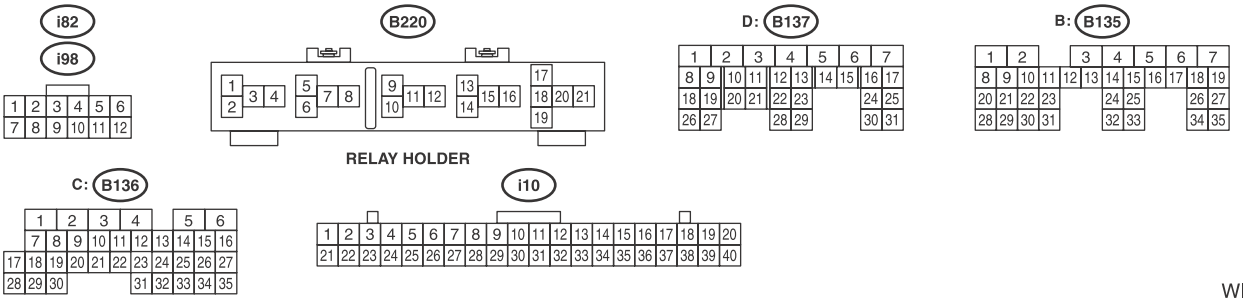
i82
i98
B220
D: B137
B: B135
RELAY HOLDER
C: B136
i10

WI-25468

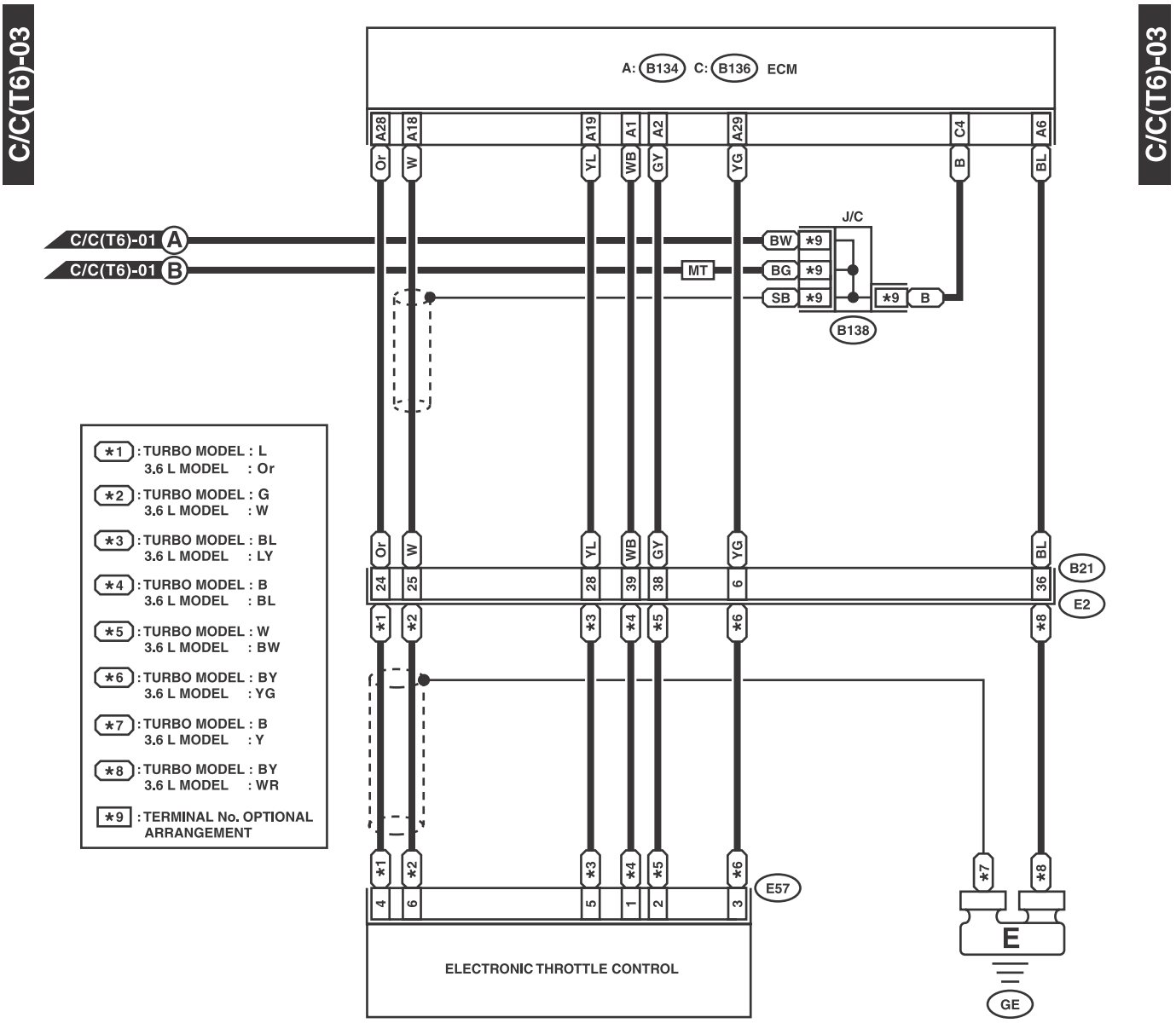
C/C(T6)-03
C/C(T6)-03
A: B134 C: B136 ECM
A28 A18 A19 A1 A2 A29 C4 A6
Or W YL WB GY YG B BL
J/C
C/C(T6)-01 A
C/C(T6)-01 B
MT
BW *9
BG *9
SB *9
*9 B
B138
*1 : TURBO MODEL : L
3.6 L MODEL : Or
*2 : TURBO MODEL : G
3.6 L MODEL : W
*3 : TURBO MODEL : BL
3.6 L MODEL : LY
*4 : TURBO MODEL : B
3.6 L MODEL : BL
*5 : TURBO MODEL : W
3.6 L MODEL : BW
*6 : TURBO MODEL : BY
3.6 L MODEL : YG
*7 : TURBO MODEL : B
3.6 L MODEL : Y
*8 : TURBO MODEL : BY
3.6 L MODEL : WR
*9 : TERMINAL No. OPTIONAL ARRANGEMENT
24 25 28 39 38 6 36
B21
E2
*1 *2 *3 *4 *5 *6 *8
4 6 5 1 2 3
E57
*7 *8
E
GE
ELECTRONIC THROTTLE CONTROL

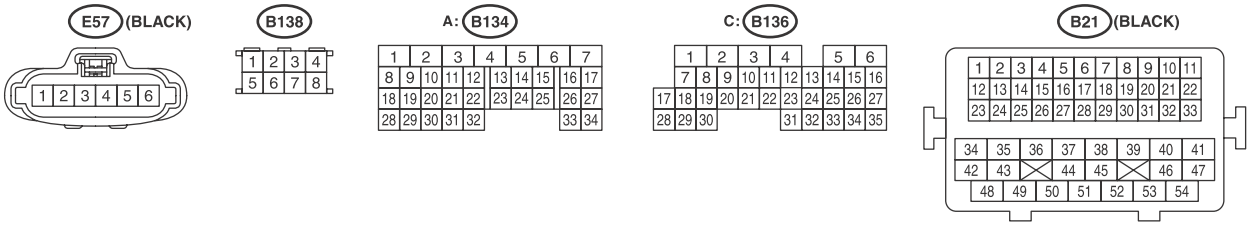
E57 (BLACK)
B138
A: B134
C: B136
B21 (BLACK)

WI-25469

18.CVT Control System

A: WIRING DIAGRAM

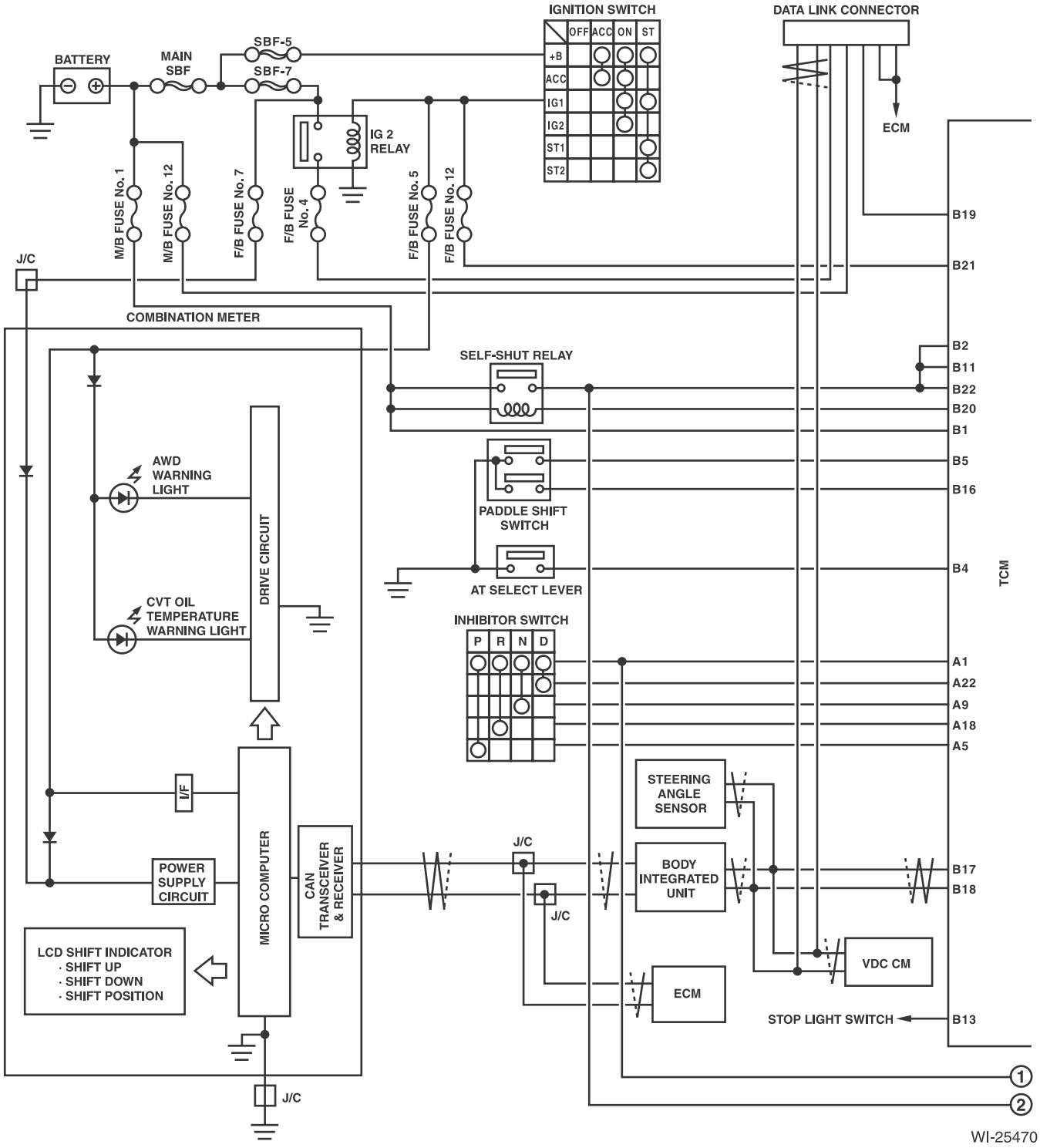

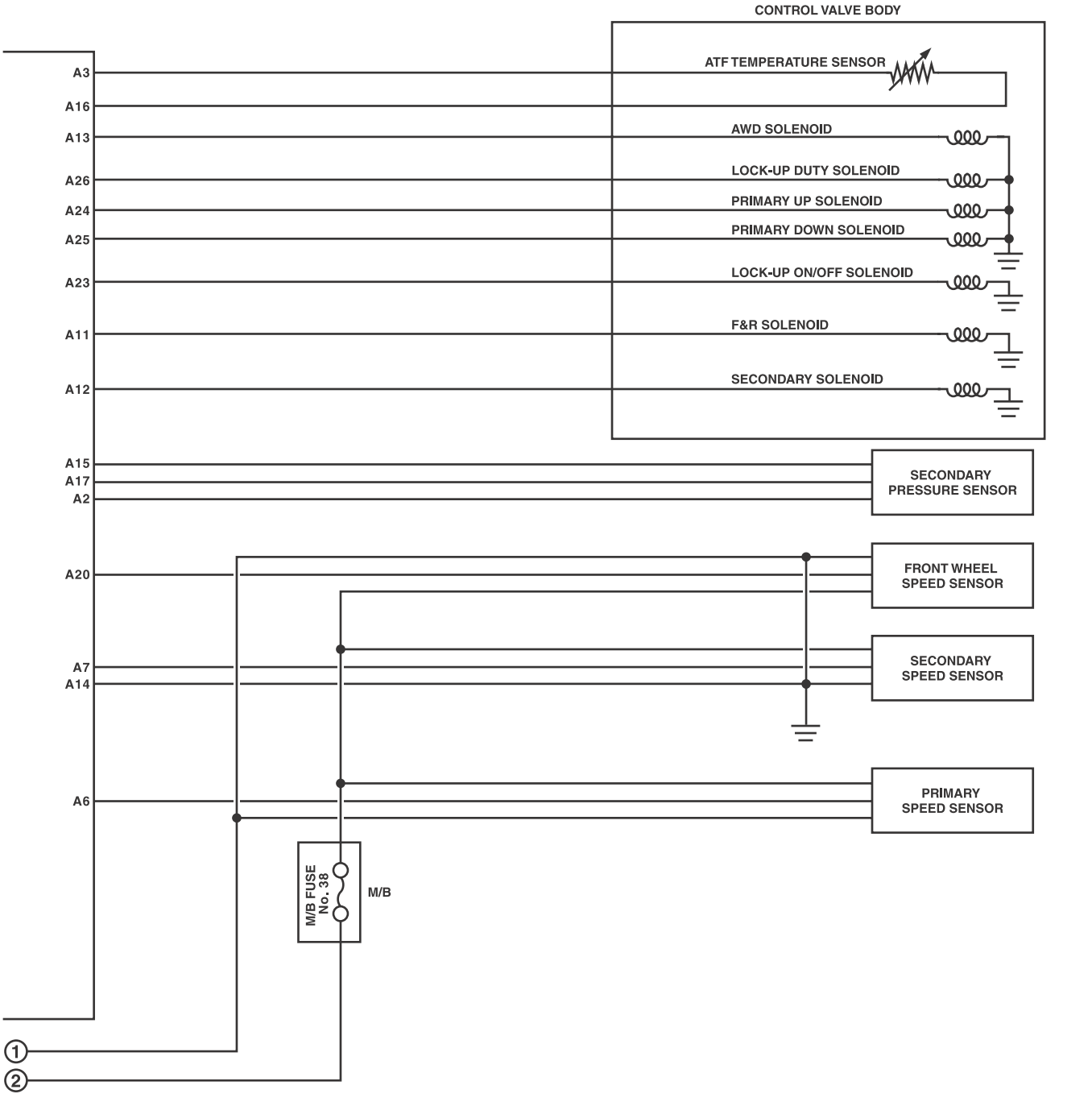
CONTROL VALVE BODY
ATF TEMPERATURE SENSOR
AWD SOLENOID
LOCK-UP DUTY SOLENOID
PRIMARY UP SOLENOID
PRIMARY DOWN SOLENOID
LOCK-UP ON/OFF SOLENOID
F&R SOLENOID
SECONDARY SOLENOID
A3
A16
A13
A26
A24
A25
A23
A11
A12
A15
A17
A2
A20
A7
A14
A6
SECONDARY PRESSURE SENSOR
FRONT WHEEL SPEED SENSOR
SECONDARY SPEED SENSOR
PRIMARY SPEED SENSOR
M/B FUSE No. 38
M/B
1
2

WI-25471

CVT-01

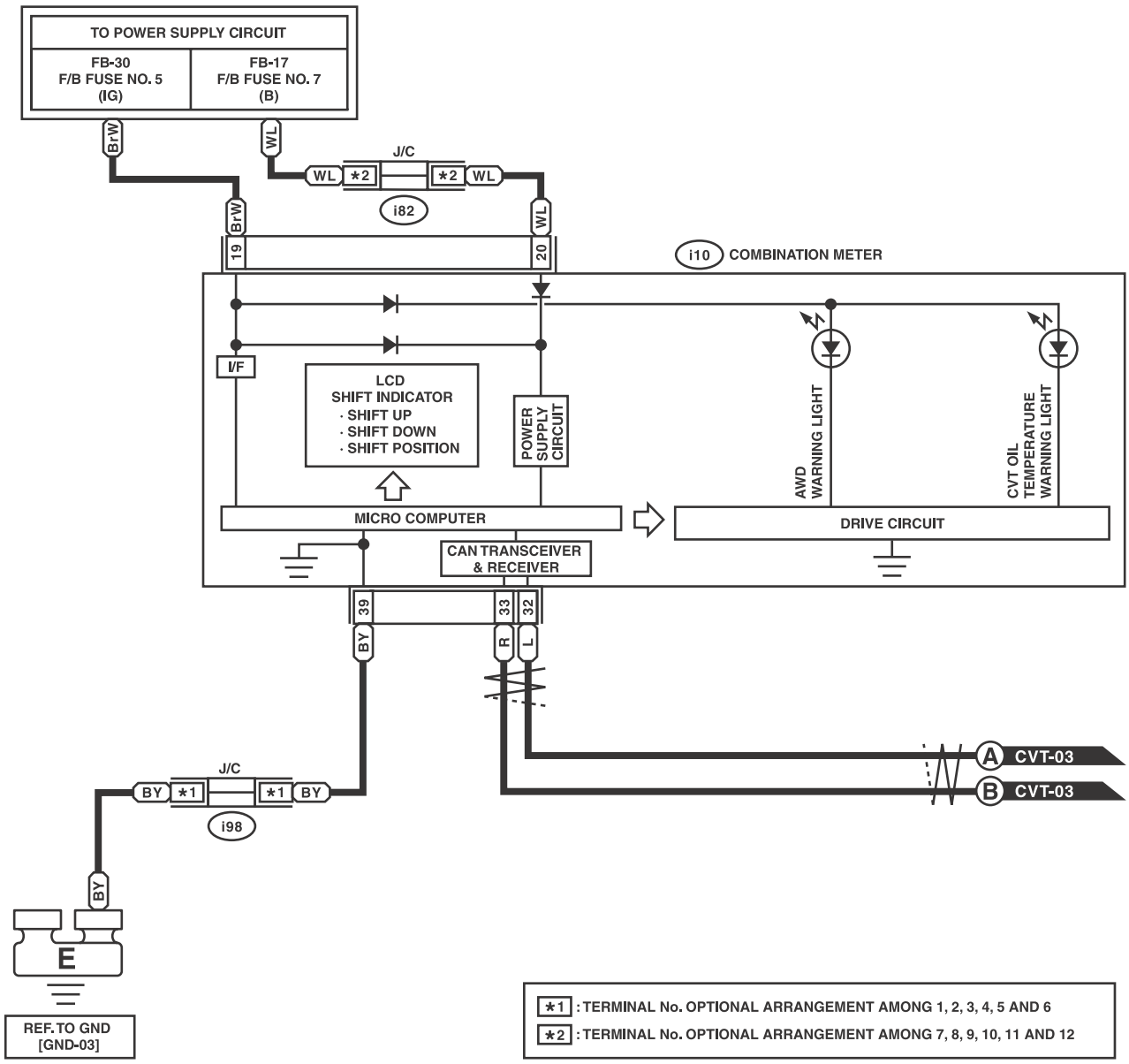

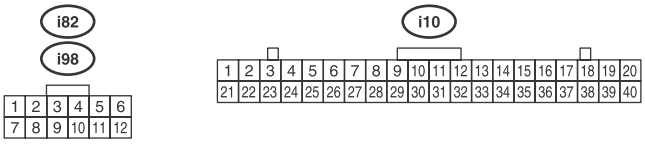

WI-25472

CVT-02

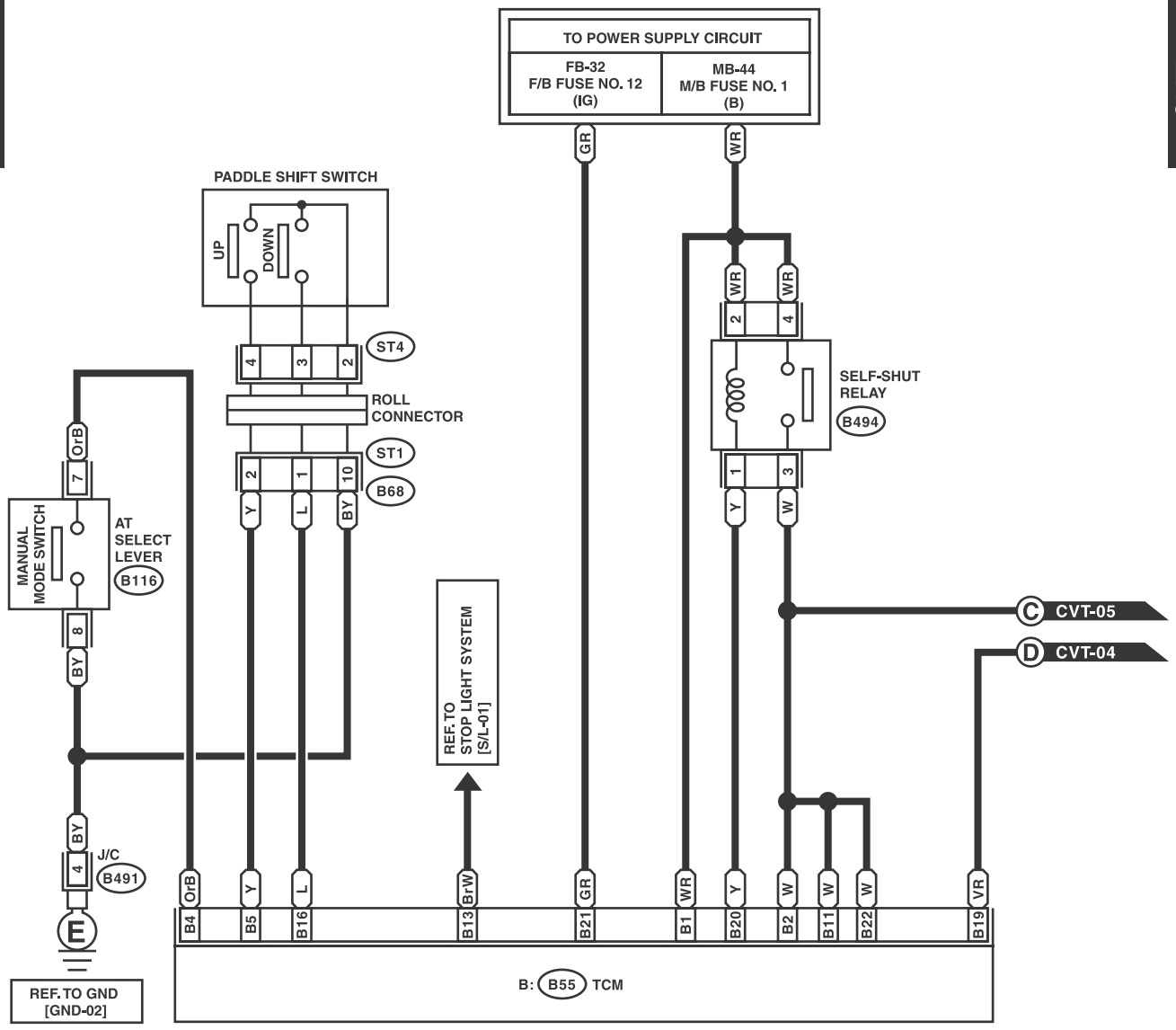

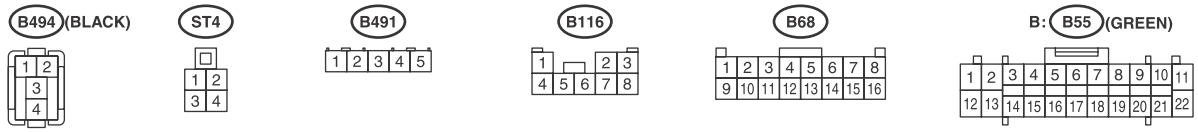

WI-25473

CVT-03

CVT-03

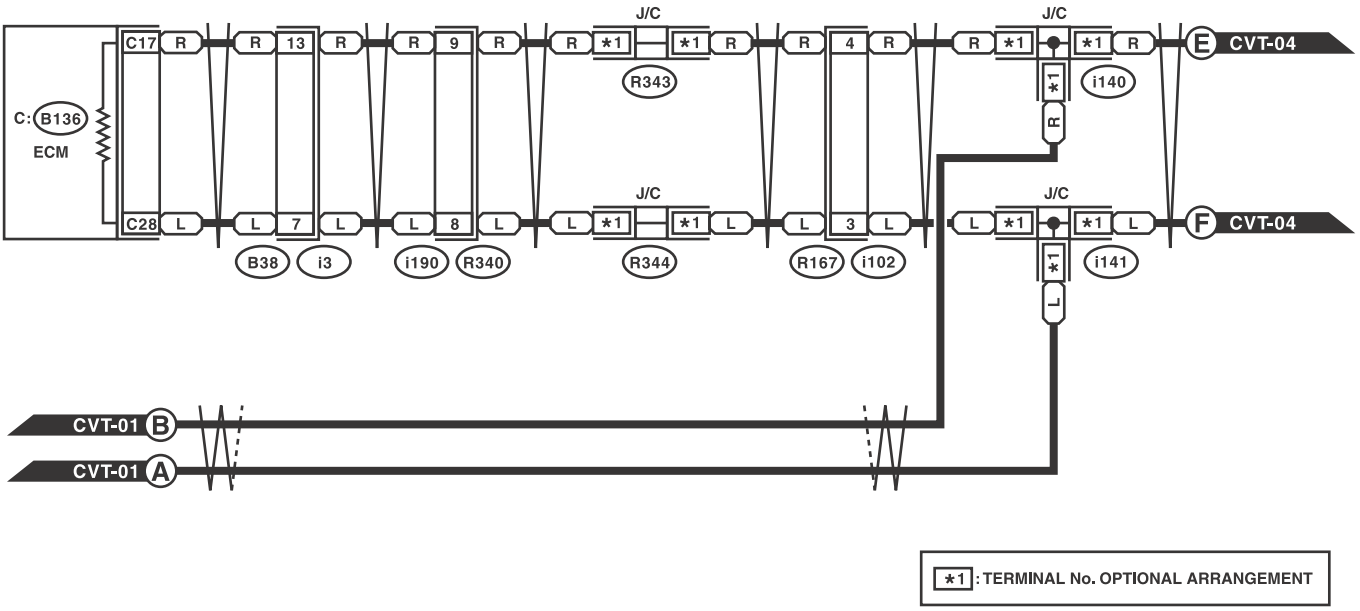

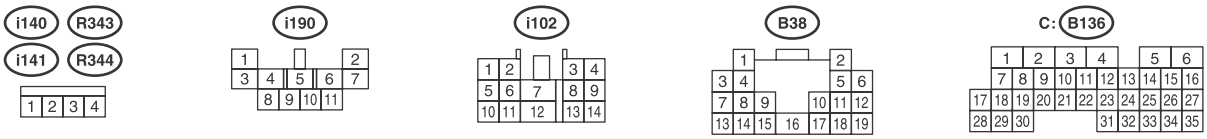

WI-25474

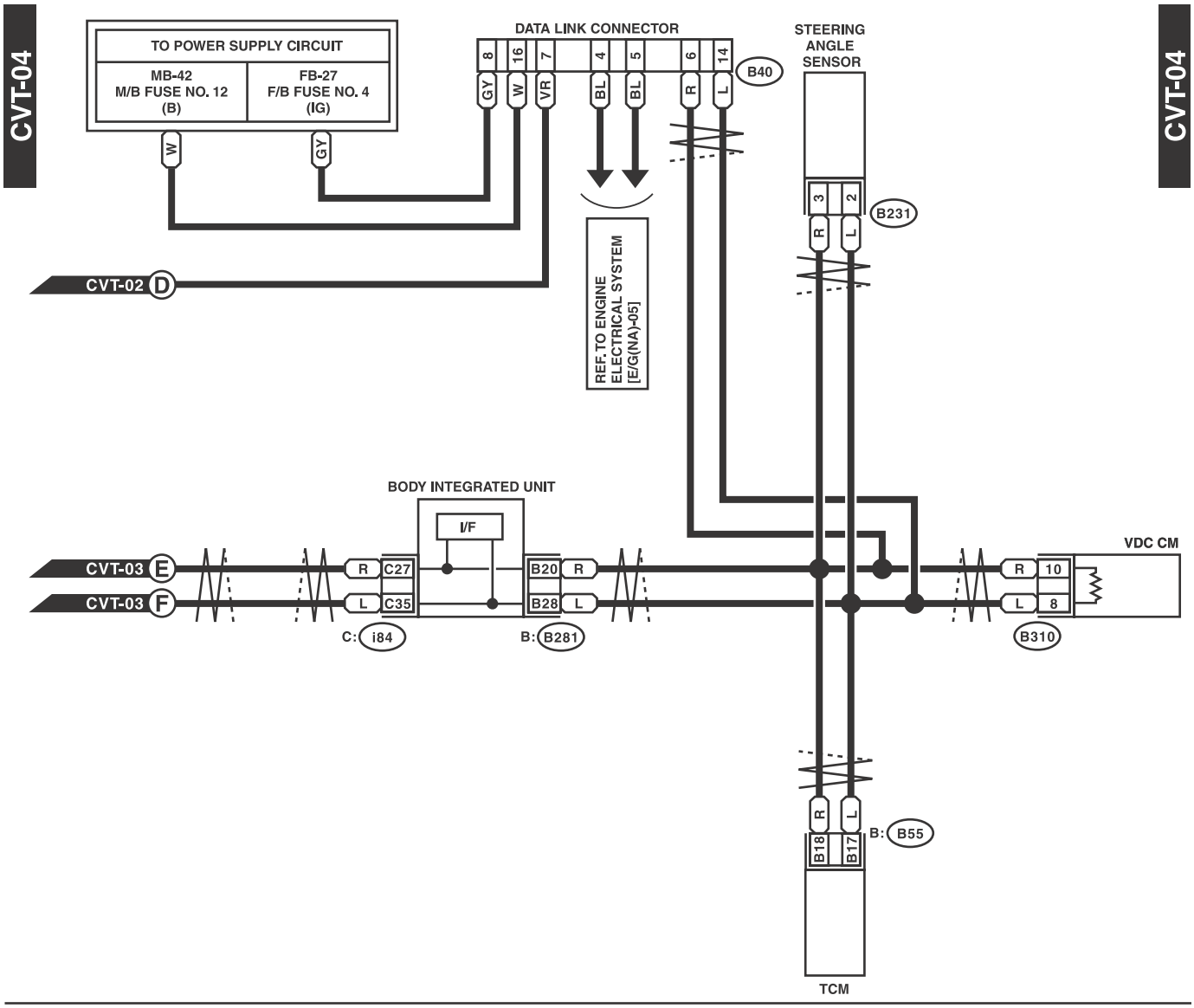
CVT-04
CVT-04
TO POWER SUPPLY CIRCUIT
MB-42
M/B FUSE NO. 12
(B)
FB-27
F/B FUSE NO. 4
(IG)
W
GY
DATA LINK CONNECTOR
8
16
7
4
5
6
14
B40
GY
W
VR
BL
BL
R
L
STEERING ANGLE SENSOR
3
2
B231
R
L
CVT-02 D
REF. TO ENGINE ELECTRICAL SYSTEM [E/G(NA)-05]
BODY INTEGRATED UNIT
I/F
VDC CM
CVT-03 E
CVT-03 F
R
L
C27
C35
B20
B28
R
L
R
L
10
8
C: i84
B: B281
B310
R
L
B18
B17
B: B55
TCM

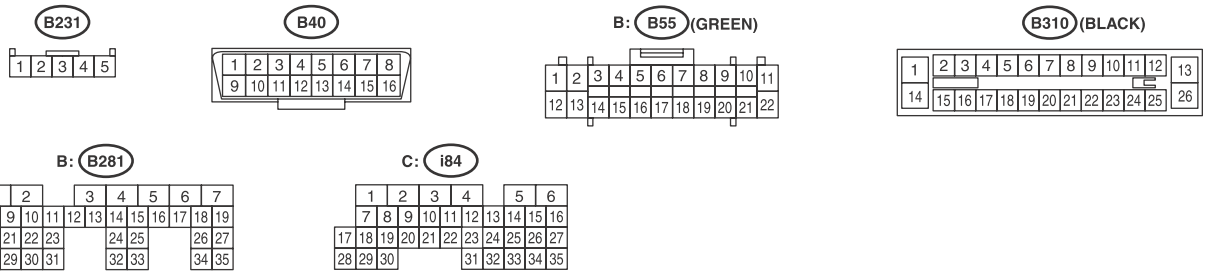
B231
1 2 3 4 5
B40
1 2 3 4 5 6 7 8
9 10 11 12 13 14 15 16
B: B55 (GREEN)
1 2 3 4 5 6 7 8 9 10 11
12 13 14 15 16 17 18 19 20 21 22
B310 (BLACK)
1 2 3 4 5 6 7 8 9 10 11 12 13
14 15 16 17 18 19 20 21 22 23 24 25 26
B: B281
1 2 3 4 5 6 7
8 9 10 11 12 13 14 15 16 17 18 19
20 21 22 23 24 25 26 27
28 29 30 31 32 33 34 35
C: i84
1 2 3 4 5 6
7 8 9 10 11 12 13 14 15 16
17 18 19 20 21 22 23 24 25 26 27
28 29 30 31 32 33 34 35

WI-25475

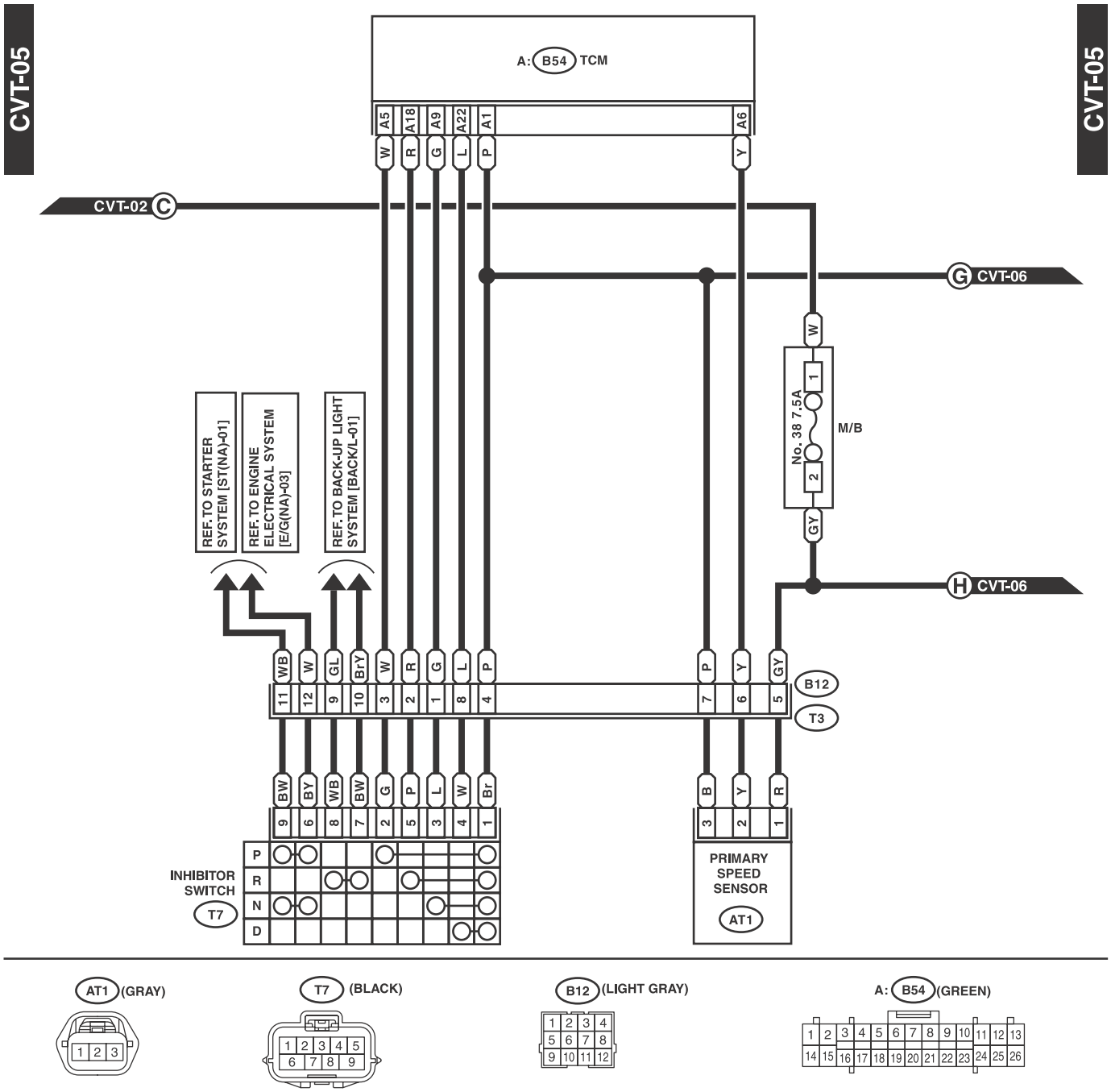
CVT-05
CVT-05
A: B54 TCM
A5
A18
A9
A22
A1
A6
W
R
G
L
P
Y
CVT-02 C
G CVT-06
H CVT-06
W
No. 38 7.5A
1
2
M/B
GY
REF. TO STARTER SYSTEM [ST(NA)-01]
REF. TO ENGINE ELECTRICAL SYSTEM [E/G(NA)-03]
REF. TO BACK-UP LIGHT SYSTEM [BACK/L-01]
WB
W
GL
BrY
W
R
G
L
P
P
Y
GY
11
12
9
10
3
2
1
8
4
7
6
5
B12
T3
BW
BY
WB
BW
G
P
L
W
Br
B
Y
R
9
6
8
7
2
5
3
4
1
3
2
1
P
R
N
D
INHIBITOR SWITCH
T7
PRIMARY SPEED SENSOR
AT1

AT1 (GRAY)
1 2 3
T7 (BLACK)
1 2 3 4 5
6 7 8 9
B12 (LIGHT GRAY)
1 2 3 4
5 6 7 8
9 10 11 12
A: B54 (GREEN)
1 2 3 4 5 6 7 8 9 10 11 12 13
14 15 16 17 18 19 20 21 22 23 24 25 26

WI-25476

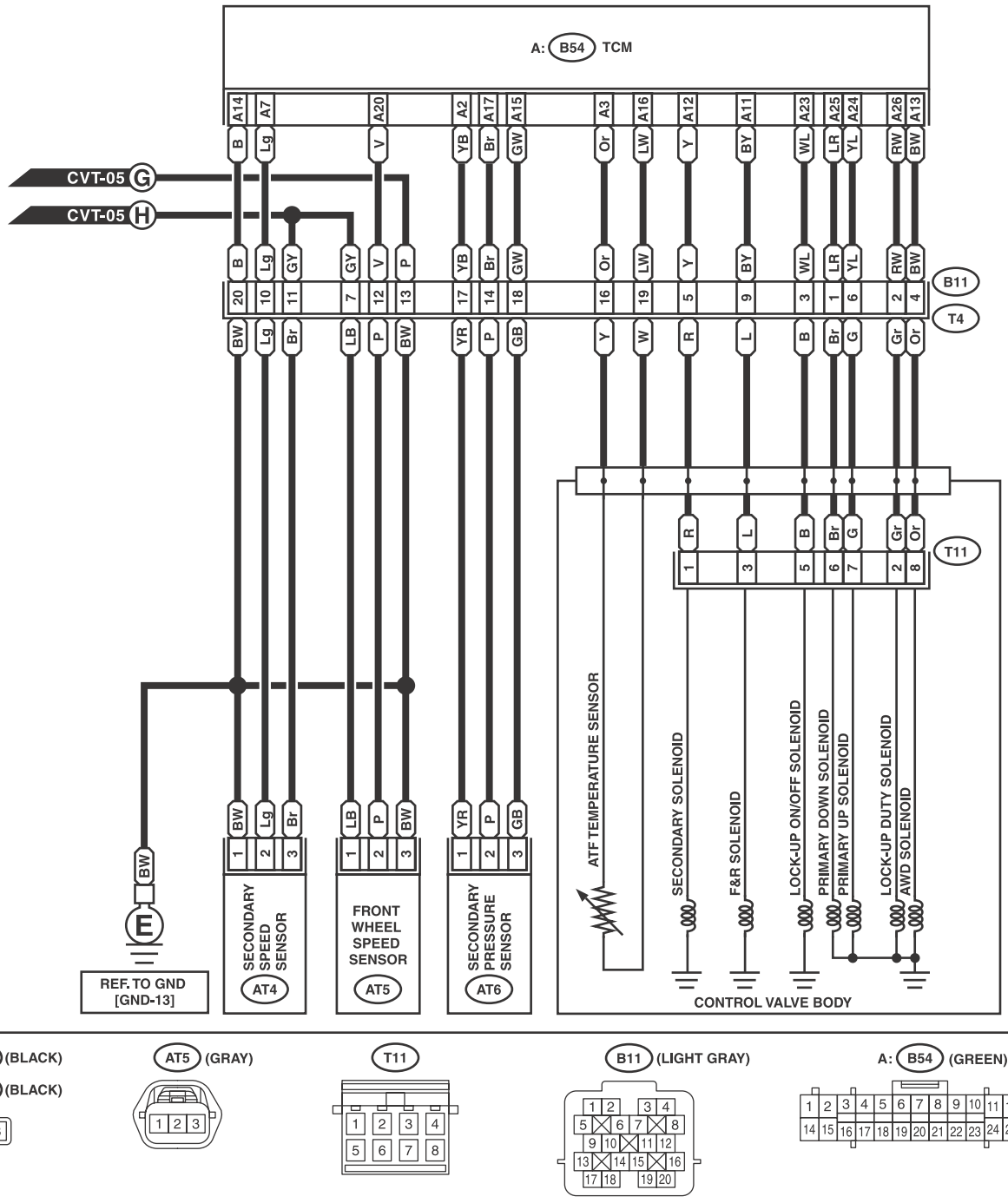
A: B54 TCM
A14 A7 A20 A2 A17 A15 A3 A16 A12 A11 A23 A25 A24 A26 A13
B Lg V YB Br GW Or LW Y BY WL LR YL RW BW
CVT-05 G
CVT-05 H
B Lg GY GY V P YB Br GW Or LW Y BY WL LR YL RW BW
20 10 11 7 12 13 17 14 18 16 19 5 9 3 1 6 2 4
B11
T4
BW Lg Br LB P BW YR P GB Y W R L B Br G Gr Or
R L B Br G Gr Or
1 3 5 6 7 2 8
T11
BW
E
REF. TO GND [GND-13]
1 2 3
SECONDARY SPEED SENSOR
AT4
1 2 3
FRONT WHEEL SPEED SENSOR
AT5
1 2 3
SECONDARY PRESSURE SENSOR
AT6
ATF TEMPERATURE SENSOR
SECONDARY SOLENOID
F&R SOLENOID
LOCK-UP ON/OFF SOLENOID
PRIMARY DOWN SOLENOID
PRIMARY UP SOLENOID
LOCK-UP DUTY SOLENOID
AWD SOLENOID
CONTROL VALVE BODY

AT4 (BLACK)
AT6 (BLACK)
1 2 3
AT5 (GRAY)
1 2 3
T11
1 2 3 4
5 6 7 8
B11 (LIGHT GRAY)
1 2 3 4
5 6 7 8
9 10 11 12
13 14 15 16
17 18 19 20
A: B54 (GREEN)
1 2 3 4 5 6 7 8 9 10 11 12 13
14 15 16 17 18 19 20 21 22 23 24 25 26

WI-25477

19.Engine Electrical System

A: WIRING DIAGRAM

1. 2.5 L NON-TURBO MODEL

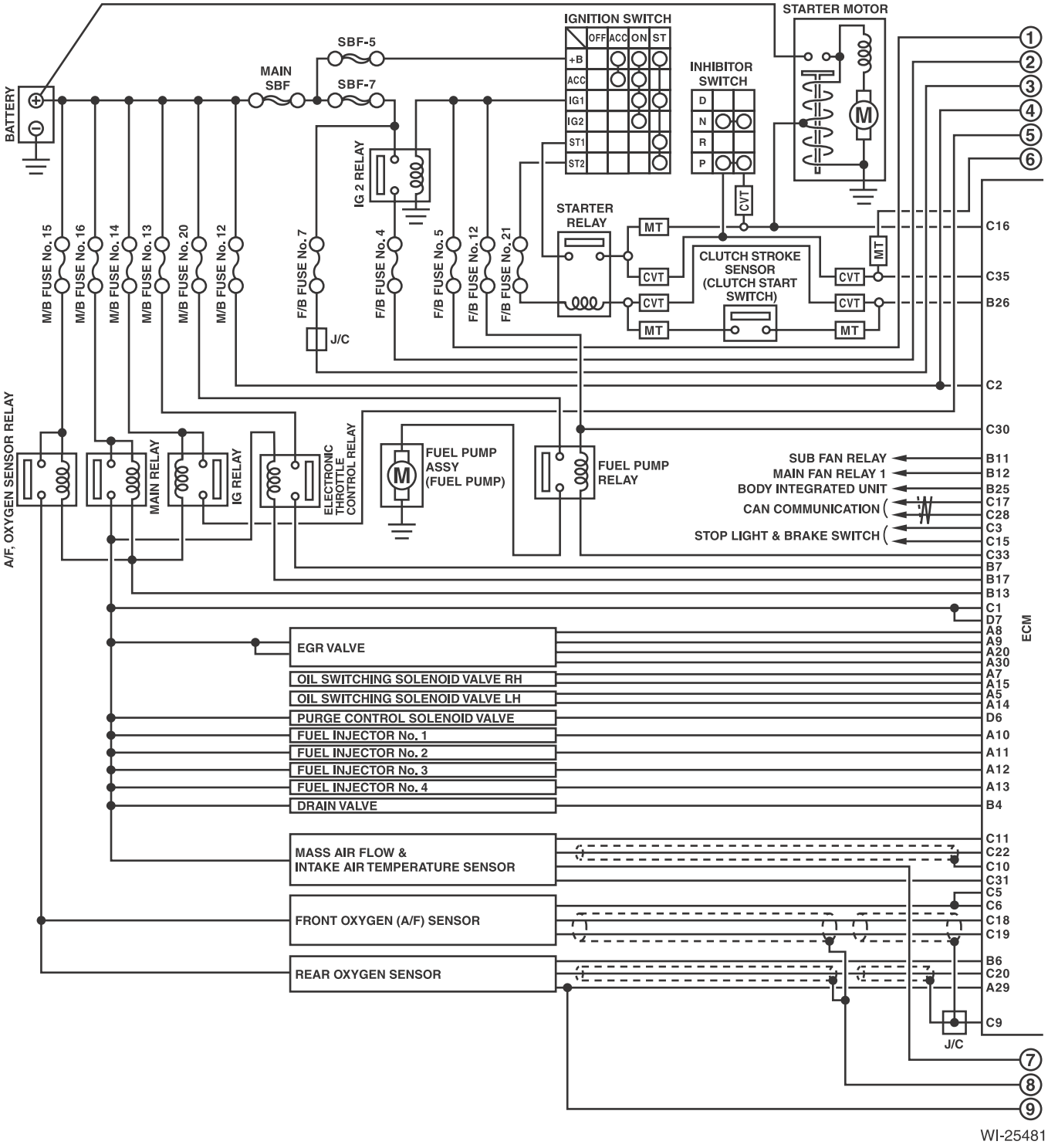

WI-25481

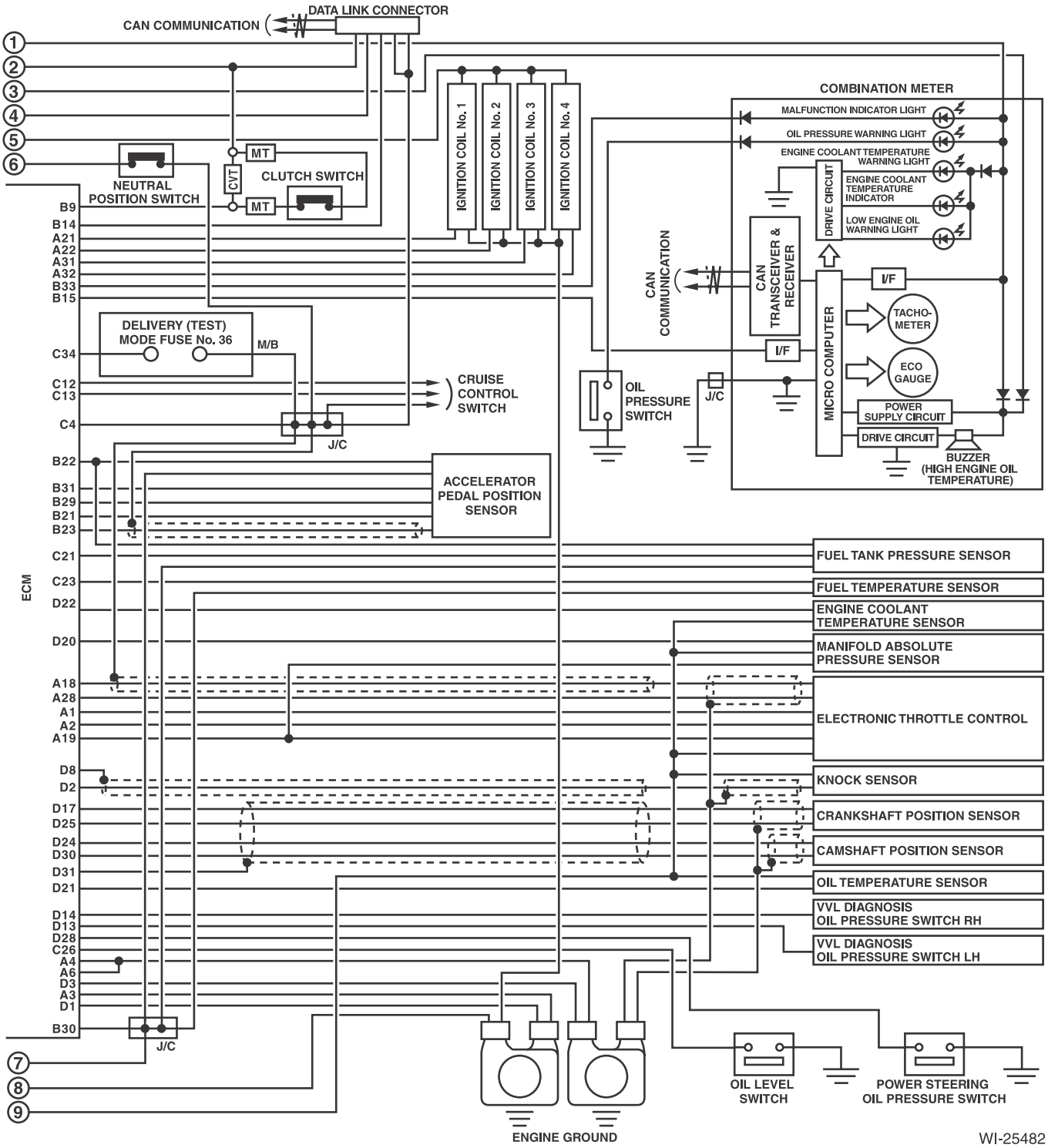
DATA LINK CONNECTOR
CAN COMMUNICATION
COMBINATION METER
MALFUNCTION INDICATOR LIGHT
OIL PRESSURE WARNING LIGHT
ENGINE COOLANT TEMPERATURE WARNING LIGHT
ENGINE COOLANT TEMPERATURE INDICATOR
LOW ENGINE OIL WARNING LIGHT
DRIVE CIRCUIT
IGNITION COIL No. 1
IGNITION COIL No. 2
IGNITION COIL No. 3
IGNITION COIL No. 4
NEUTRAL POSITION SWITCH
MT
CVT
CLUTCH SWITCH
DELIVERY (TEST) MODE FUSE No. 36
M/B
CRUISE CONTROL SWITCH
J/C
CAN COMMUNICATION
CAN TRANSCEIVER & RECEIVER
I/F
MICRO COMPUTER
TACHO-METER
ECO GAUGE
POWER SUPPLY CIRCUIT
DRIVE CIRCUIT
BUZZER (HIGH ENGINE OIL TEMPERATURE)
OIL PRESSURE SWITCH
ACCELERATOR PEDAL POSITION SENSOR
ECM
FUEL TANK PRESSURE SENSOR
FUEL TEMPERATURE SENSOR
ENGINE COOLANT TEMPERATURE SENSOR
MANIFOLD ABSOLUTE PRESSURE SENSOR
ELECTRONIC THROTTLE CONTROL
KNOCK SENSOR
CRANKSHAFT POSITION SENSOR
CAMSHAFT POSITION SENSOR
OIL TEMPERATURE SENSOR
VVL DIAGNOSIS OIL PRESSURE SWITCH RH
VVL DIAGNOSIS OIL PRESSURE SWITCH LH
OIL LEVEL SWITCH
POWER STEERING OIL PRESSURE SWITCH
ENGINE GROUND
WI-25482

E/G(NA)-01

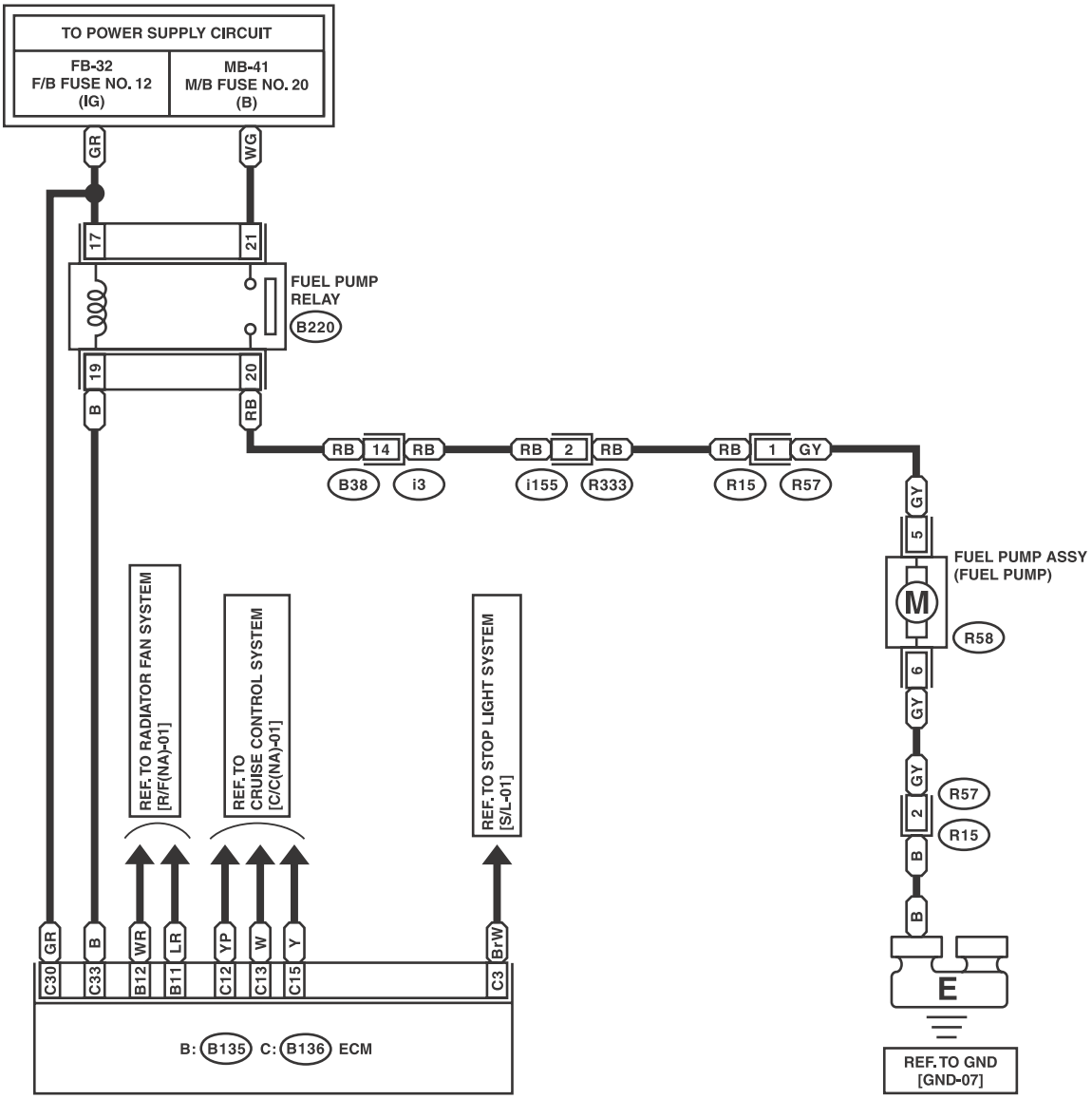

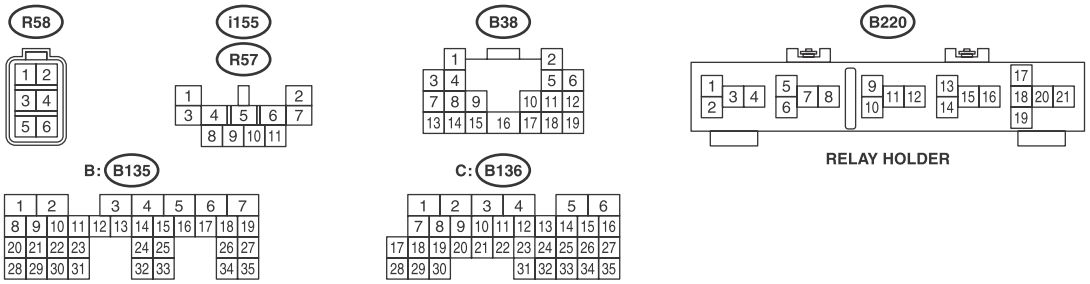

WI-25483

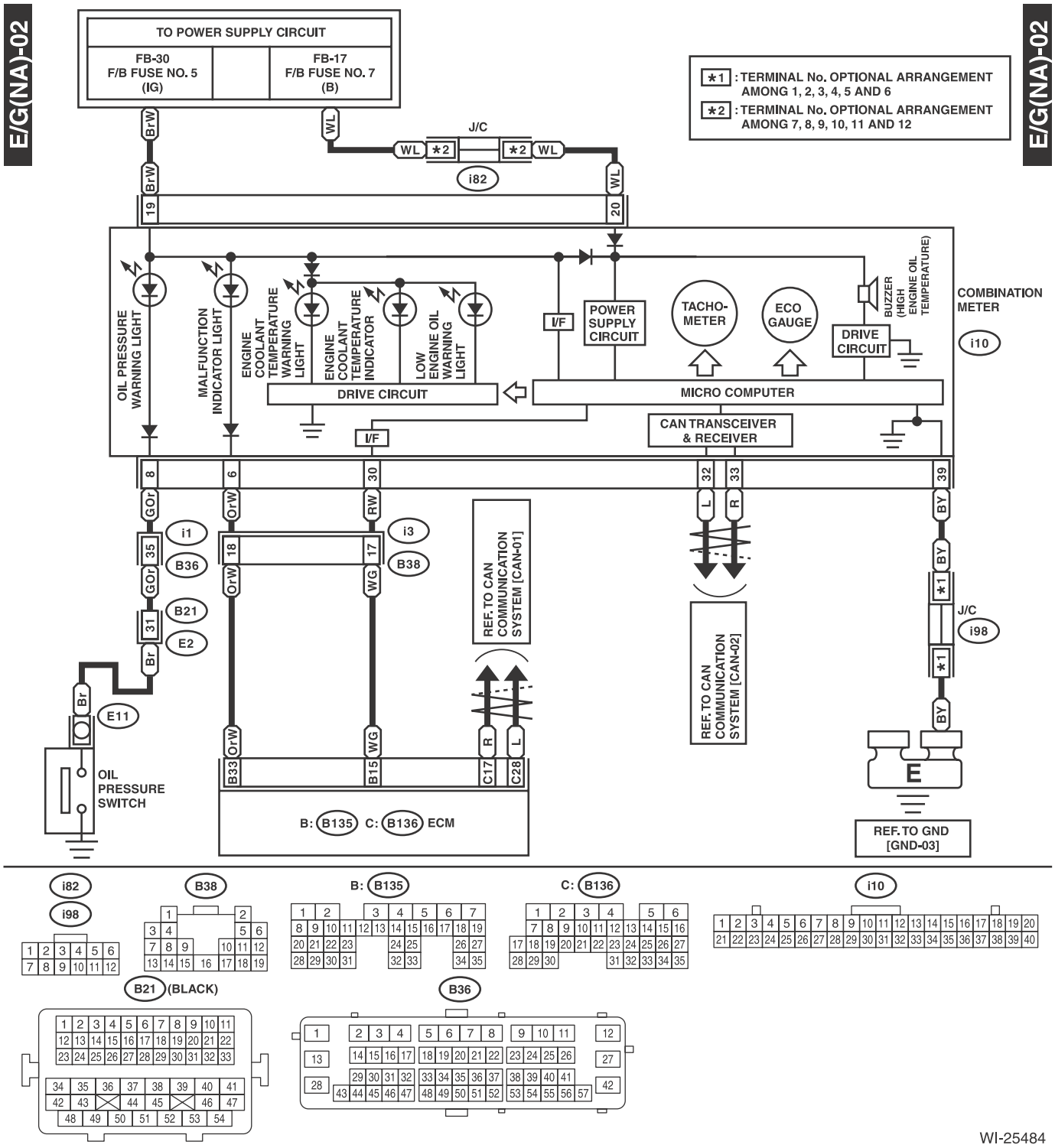
E/G(NA)-02
E/G(NA)-02
TO POWER SUPPLY CIRCUIT
FB-30 F/B FUSE NO. 5 (IG)
FB-17 F/B FUSE NO. 7 (B)
*1 : TERMINAL No. OPTIONAL ARRANGEMENT AMONG 1, 2, 3, 4, 5 AND 6
*2 : TERMINAL No. OPTIONAL ARRANGEMENT AMONG 7, 8, 9, 10, 11 AND 12
J/C
i82
OIL PRESSURE WARNING LIGHT
MALFUNCTION INDICATOR LIGHT
ENGINE COOLANT TEMPERATURE WARNING LIGHT
ENGINE COOLANT TEMPERATURE INDICATOR
LOW ENGINE OIL WARNING LIGHT
DRIVE CIRCUIT
I/F
POWER SUPPLY CIRCUIT
TACHO-METER
ECO GAUGE
DRIVE CIRCUIT
BUZZER (HIGH ENGINE OIL TEMPERATURE)
COMBINATION METER
i10
MICRO COMPUTER
CAN TRANSCEIVER & RECEIVER
REF. TO CAN COMMUNICATION SYSTEM [CAN-01]
REF. TO CAN COMMUNICATION SYSTEM [CAN-02]
J/C
i98
i1
i3
B36
B38
B21
E2
E11
OIL PRESSURE SWITCH
B: B135 C: B136 ECM
E
REF. TO GND [GND-03]
i82
i98
B38
B: B135
C: B136
i10
B21 (BLACK)
B36
WI-25484

E/G(NA)-03

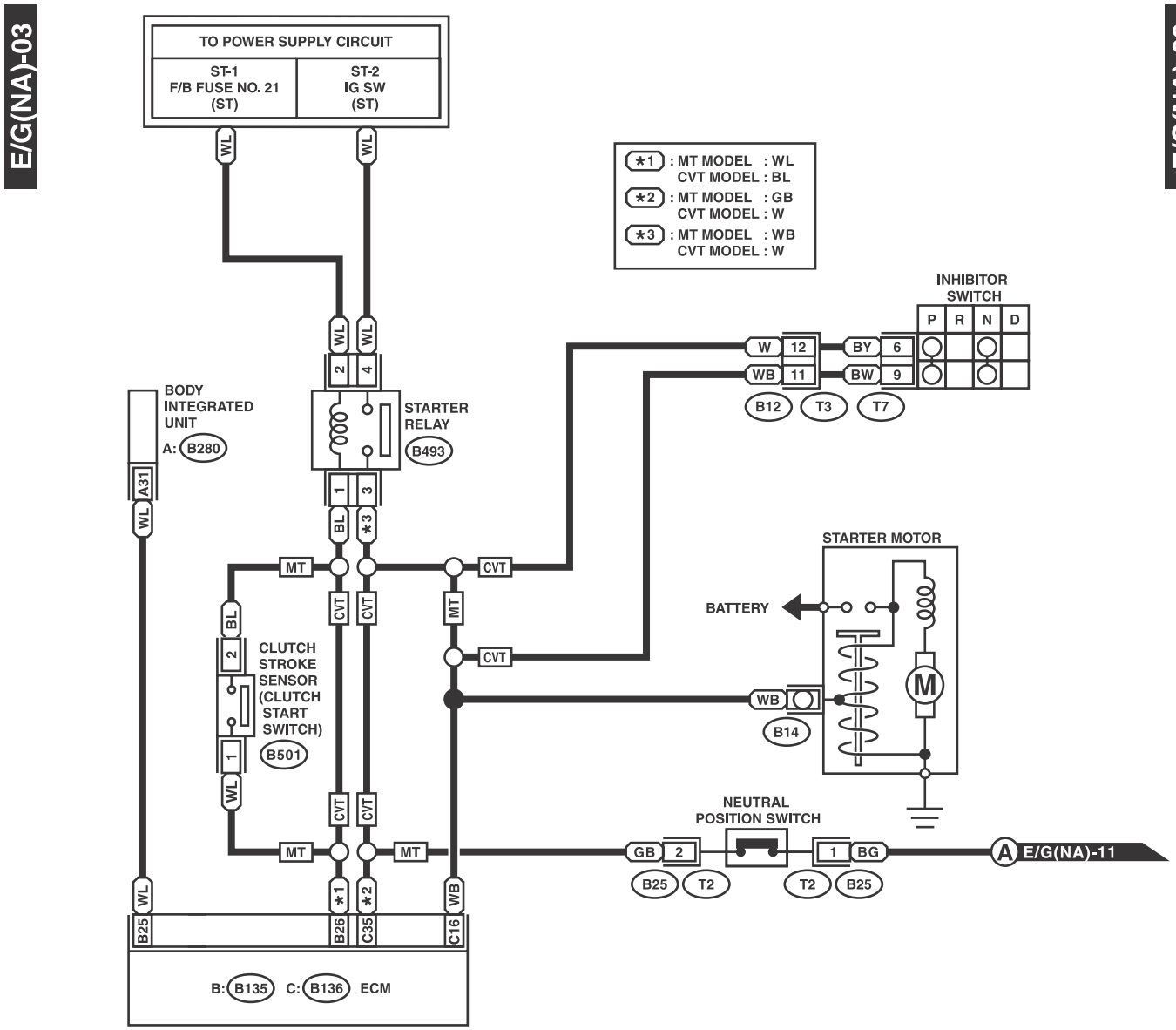

WI-25485

E/G(NA)-03

E/G(NA)-04

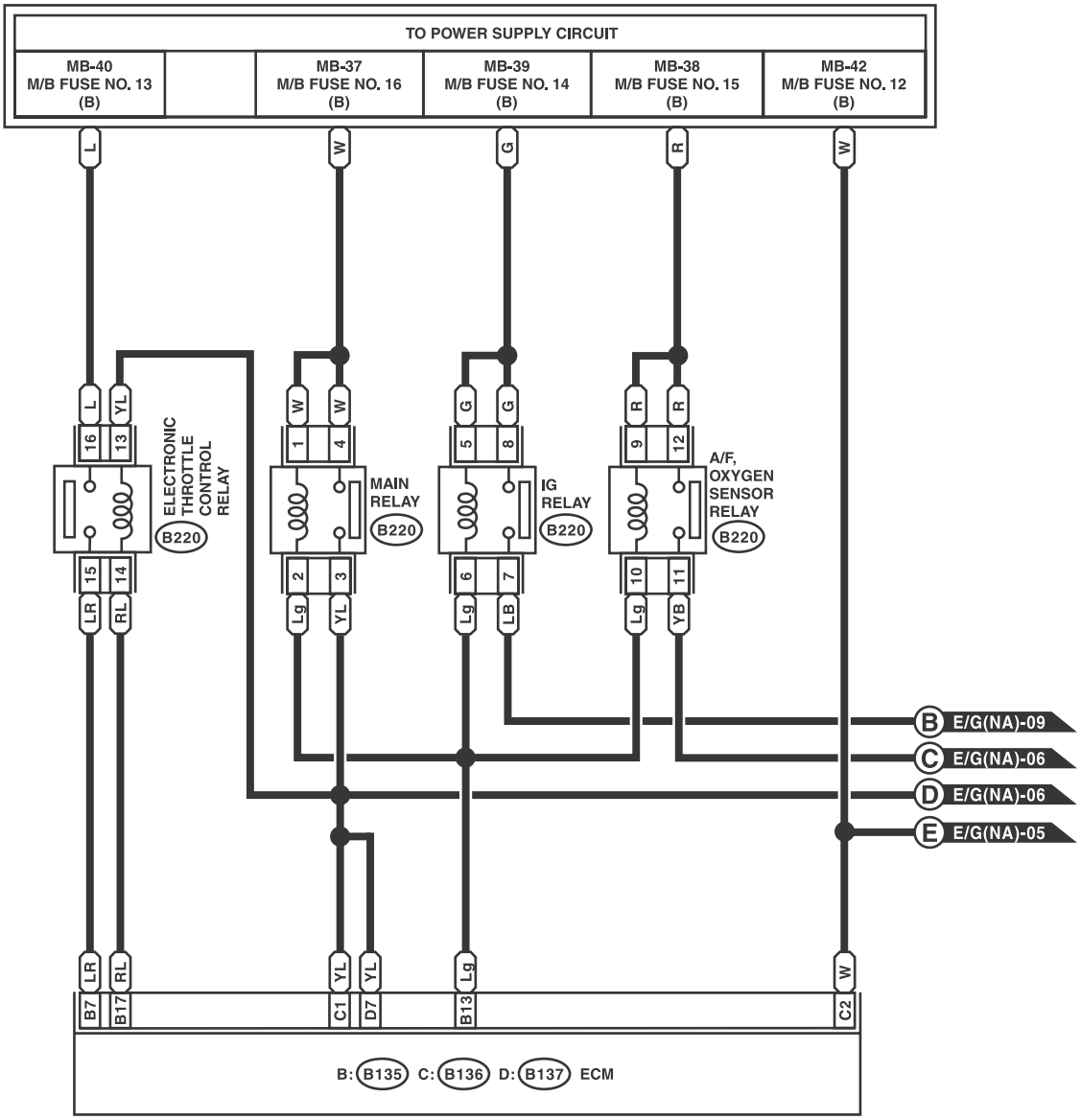

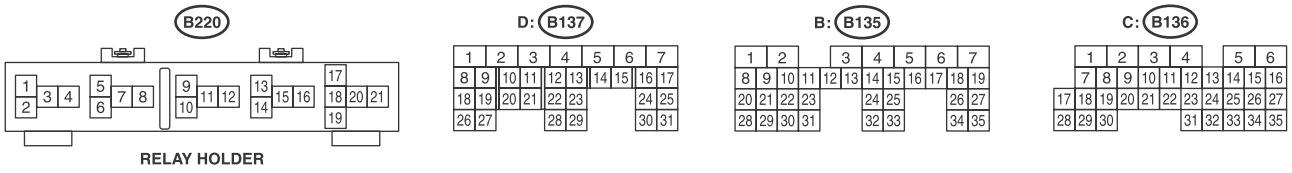

WI-25486

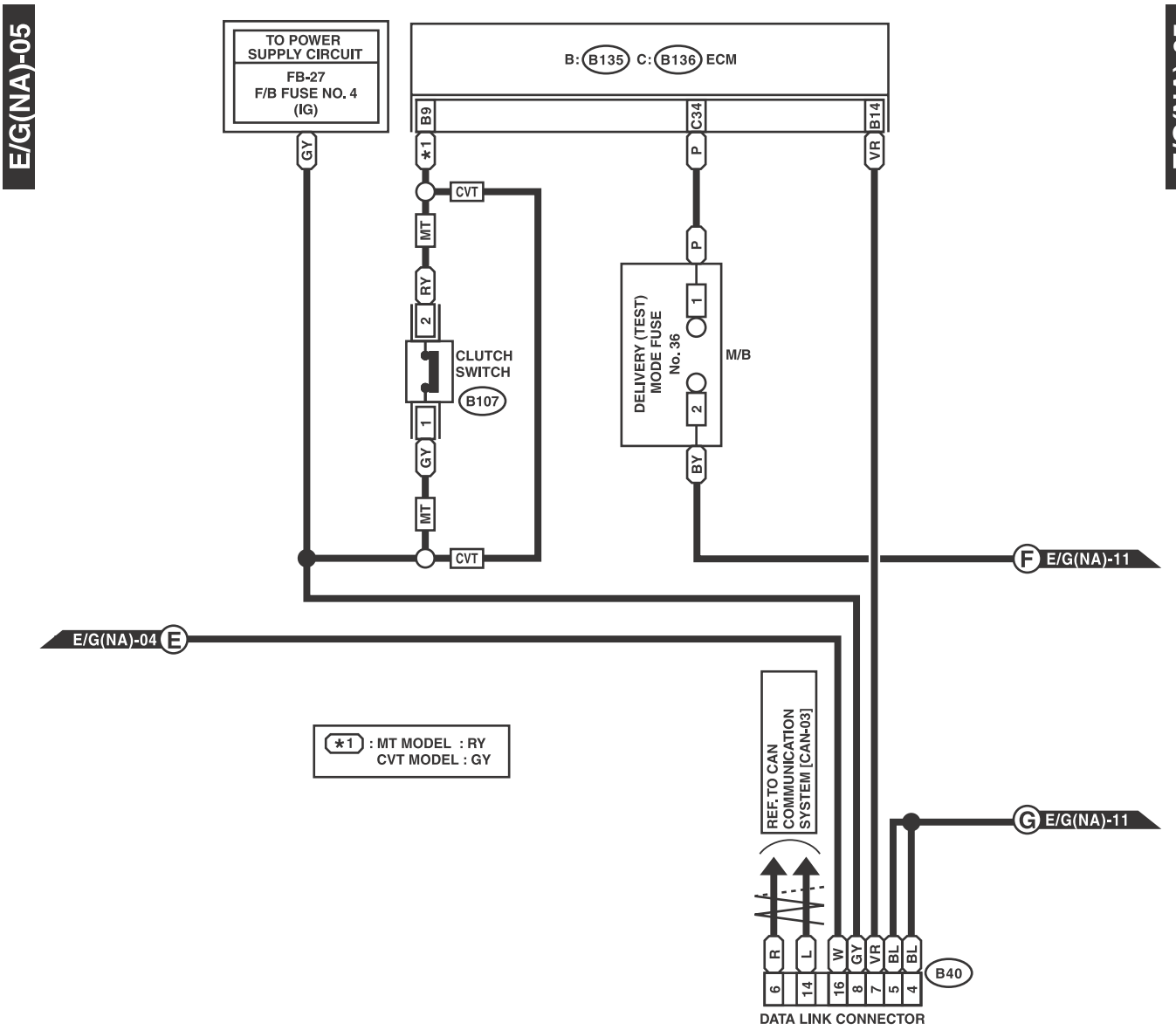
E/G(NA)-05
E/G(NA)-05
TO POWER SUPPLY CIRCUIT
FB-27
F/B FUSE NO. 4
(IG)
B: B135 C: B136 ECM
B9
C34
B14
GY
*1
P
VR
CVT
MT
RY
2
CLUTCH SWITCH
B107
1
GY
MT
CVT
P
DELIVERY (TEST) MODE FUSE No. 36
1
2
M/B
BY
F E/G(NA)-11
E/G(NA)-04 E
*1 : MT MODEL : RY
CVT MODEL : GY
REF. TO CAN COMMUNICATION SYSTEM [CAN-03]
G E/G(NA)-11
R
L
W
GY
VR
BL
BL
6
14
16
8
7
5
4
B40
DATA LINK CONNECTOR

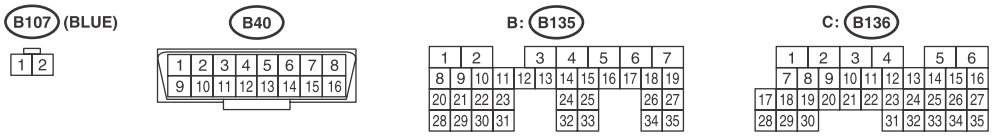
B107 (BLUE)
1 2
B40
1 2 3 4 5 6 7 8
9 10 11 12 13 14 15 16
B: B135
1 2 3 4 5 6 7
8 9 10 11 12 13 14 15 16 17 18 19
20 21 22 23 24 25 26 27
28 29 30 31 32 33 34 35
C: B136
1 2 3 4 5 6
7 8 9 10 11 12 13 14 15 16
17 18 19 20 21 22 23 24 25 26 27
28 29 30 31 32 33 34 35

WI-25487

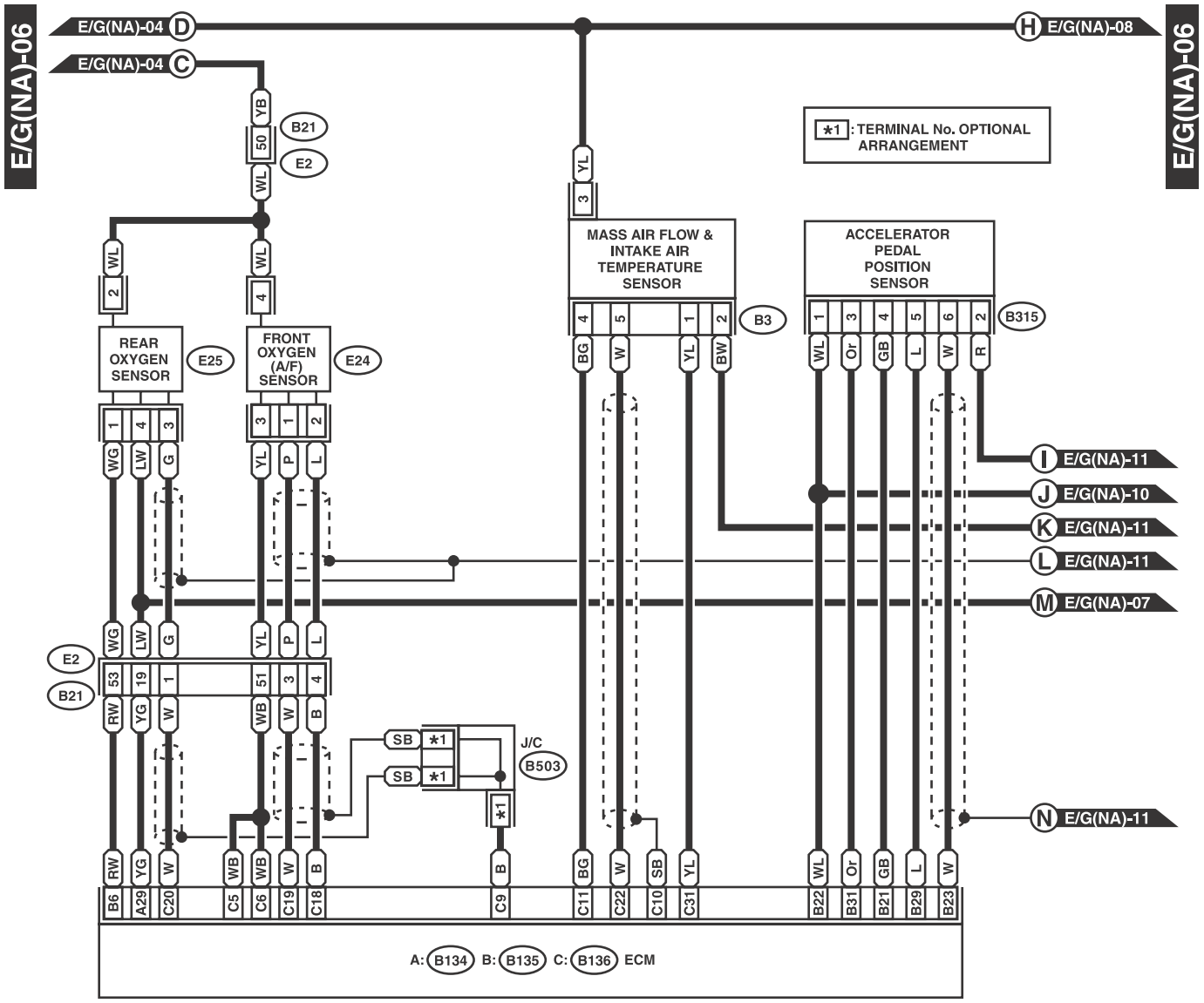
E/G(NA)-06
E/G(NA)-04 D
E/G(NA)-04 C
H E/G(NA)-08
*1: TERMINAL No. OPTIONAL ARRANGEMENT
B21
E2
MASS AIR FLOW & INTAKE AIR TEMPERATURE SENSOR
B3
ACCELERATOR PEDAL POSITION SENSOR
B315
REAR OXYGEN SENSOR
E25
FRONT OXYGEN (A/F) SENSOR
E24
I E/G(NA)-11
J E/G(NA)-10
K E/G(NA)-11
L E/G(NA)-11
M E/G(NA)-07
N E/G(NA)-11
J/C
B503
A: B134 B: B135 C: B136 ECM

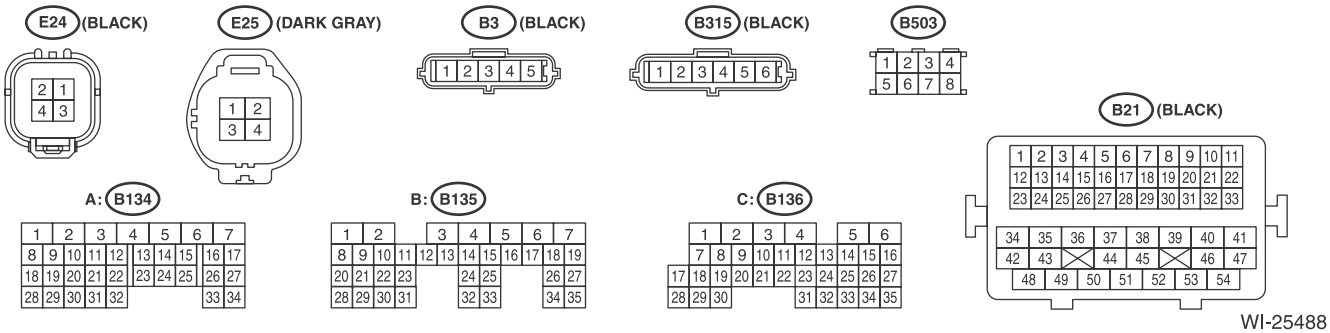
E24 (BLACK)
E25 (DARK GRAY)
B3 (BLACK)
B315 (BLACK)
B503
B21 (BLACK)
A: B134
B: B135
C: B136

WI-25488

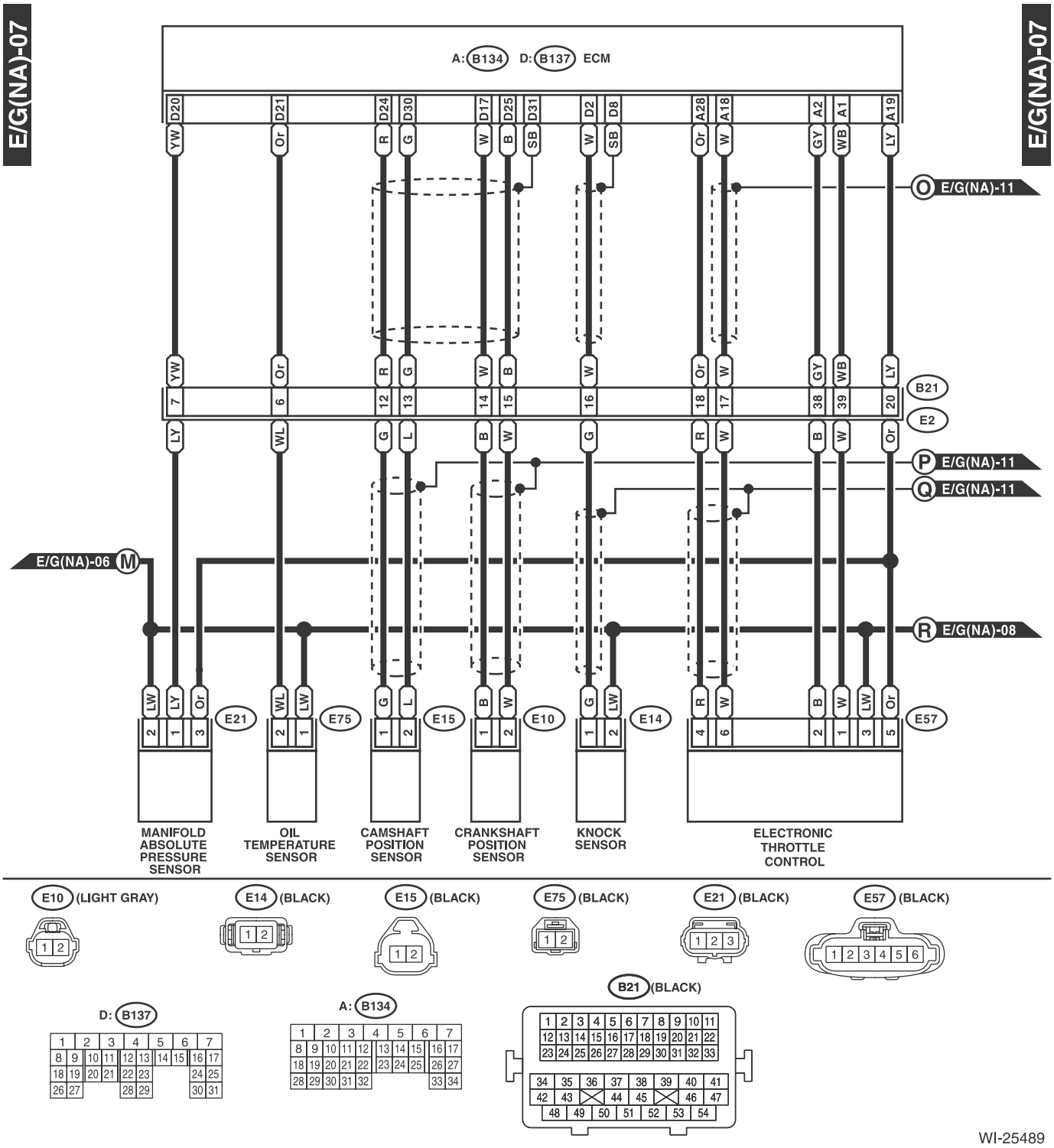
E/G(NA)-07
E/G(NA)-07
A: B134 D: B137 ECM
D20 D21 D24 D30 D17 D25 D31 D2 D8 A28 A18 A2 A1 A19
YW Or R G W B SB W SB Or W GY WB LY
E/G(NA)-11
B21
E2
7 6 12 13 14 15 16 18 17 38 39 20
LY WL G L B W G R W B W Or
P E/G(NA)-11
Q E/G(NA)-11
E/G(NA)-06 M
R E/G(NA)-08
LW LY Or WL LW G L B W G LW R W B W LW Or
E21 E75 E15 E10 E14 E57
2 1 3 2 1 1 2 1 2 1 2 4 6 2 1 3 5
MANIFOLD ABSOLUTE PRESSURE SENSOR
OIL TEMPERATURE SENSOR
CAMSHAFT POSITION SENSOR
CRANKSHAFT POSITION SENSOR
KNOCK SENSOR
ELECTRONIC THROTTLE CONTROL
E10 (LIGHT GRAY)
E14 (BLACK)
E15 (BLACK)
E75 (BLACK)
E21 (BLACK)
E57 (BLACK)
D: B137
A: B134
B21 (BLACK)
WI-25489

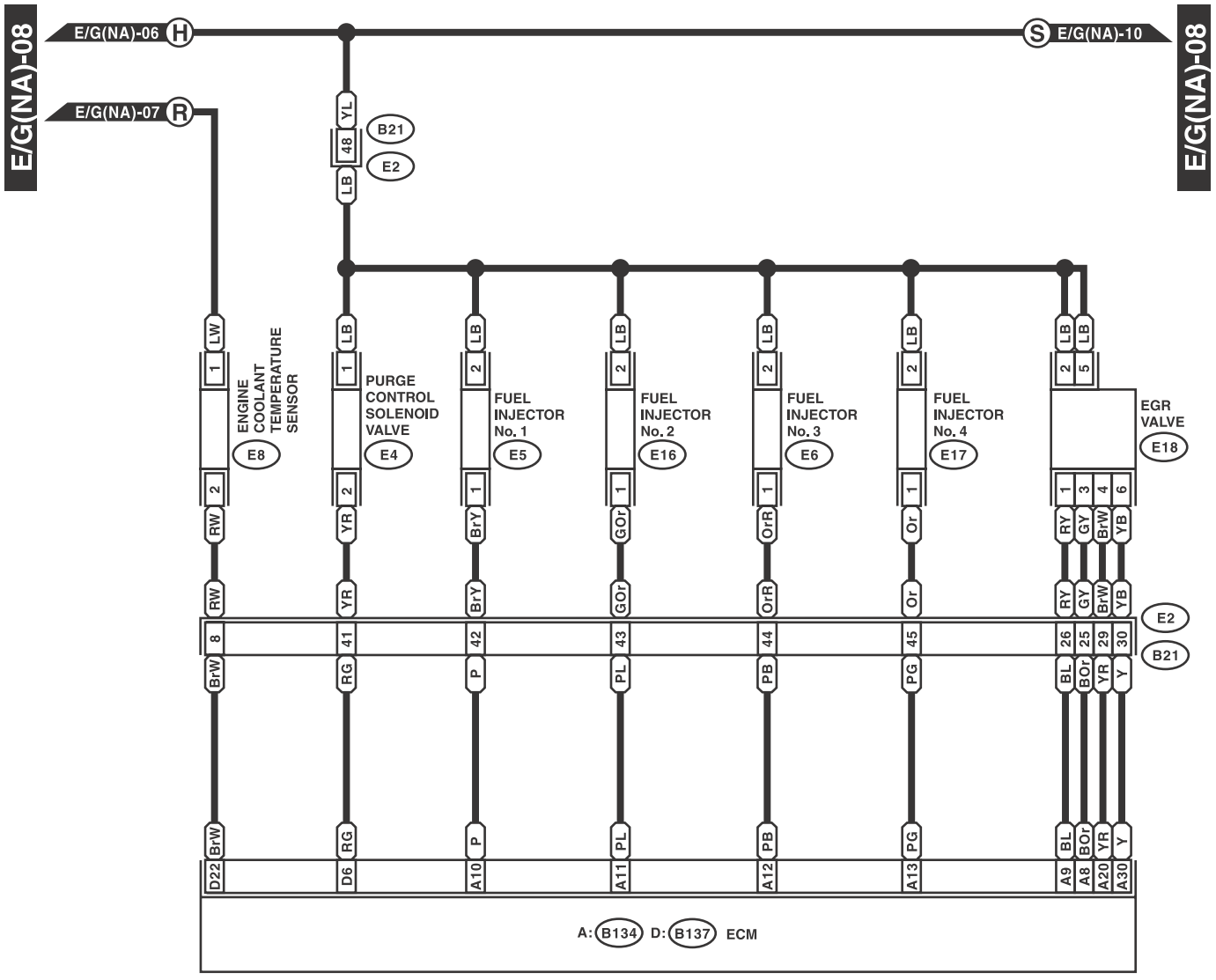
E/G(NA)-08
E/G(NA)-06 H
E/G(NA)-07 R
S E/G(NA)-10
E/G(NA)-08
B21
E2
ENGINE COOLANT TEMPERATURE SENSOR
E8
PURGE CONTROL SOLENOID VALVE
E4
FUEL INJECTOR No. 1
E5
FUEL INJECTOR No. 2
E16
FUEL INJECTOR No. 3
E6
FUEL INJECTOR No. 4
E17
EGR VALVE
E18
A: B134 D: B137 ECM

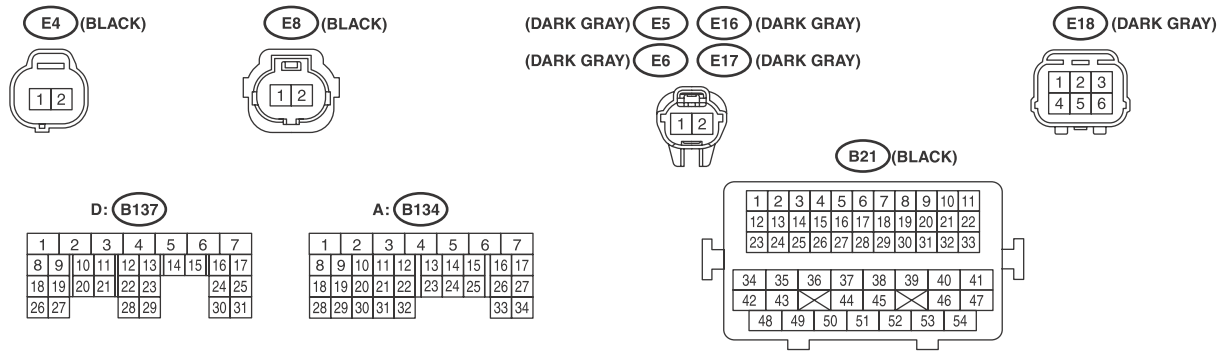
E4 (BLACK)
E8 (BLACK)
(DARK GRAY) E5 E16 (DARK GRAY)
(DARK GRAY) E6 E17 (DARK GRAY)
E18 (DARK GRAY)
B21 (BLACK)
D: B137
A: B134

WI-25490

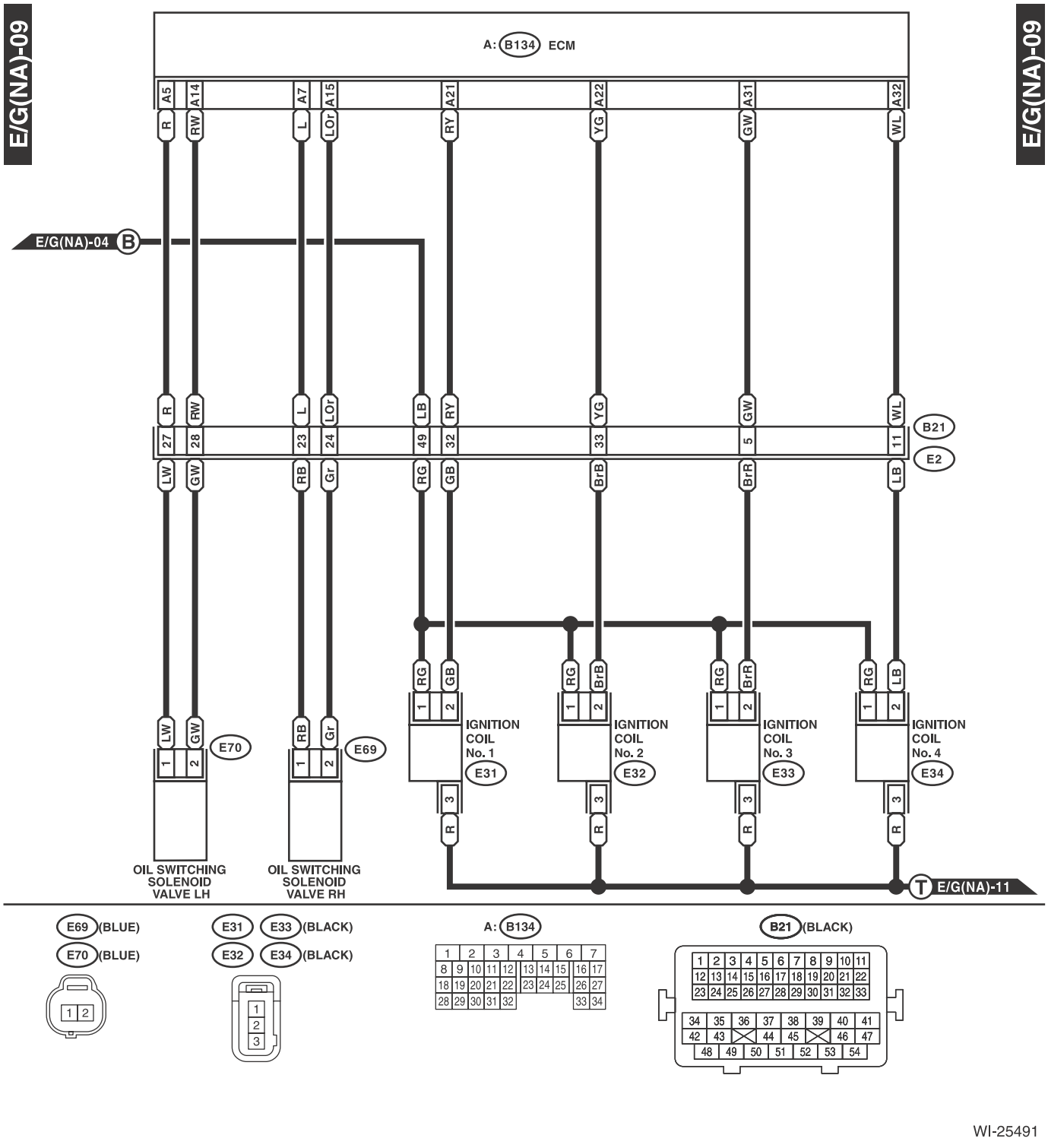
E/G(NA)-09
E/G(NA)-09
A: B134 ECM
A5 A14 A7 A15 A21 A22 A31 A32
R RW L LOr RY YG GW WL
E/G(NA)-04 B
R RW L LOr LB RY YG GW WL
27 28 23 24 49 32 33 5 11
B21
E2
LW GW RB Gr RG GB BrB BrR LB
RG GB RG BrB RG BrR RG LB
1 2 IGNITION COIL No. 1 E31
1 2 IGNITION COIL No. 2 E32
1 2 IGNITION COIL No. 3 E33
1 2 IGNITION COIL No. 4 E34
3 R
LW GW E70
RB Gr E69
OIL SWITCHING SOLENOID VALVE LH
OIL SWITCHING SOLENOID VALVE RH
T E/G(NA)-11
E69 (BLUE)
E70 (BLUE)
E31 E33 (BLACK)
E32 E34 (BLACK)
A: B134
B21 (BLACK)

WI-25491

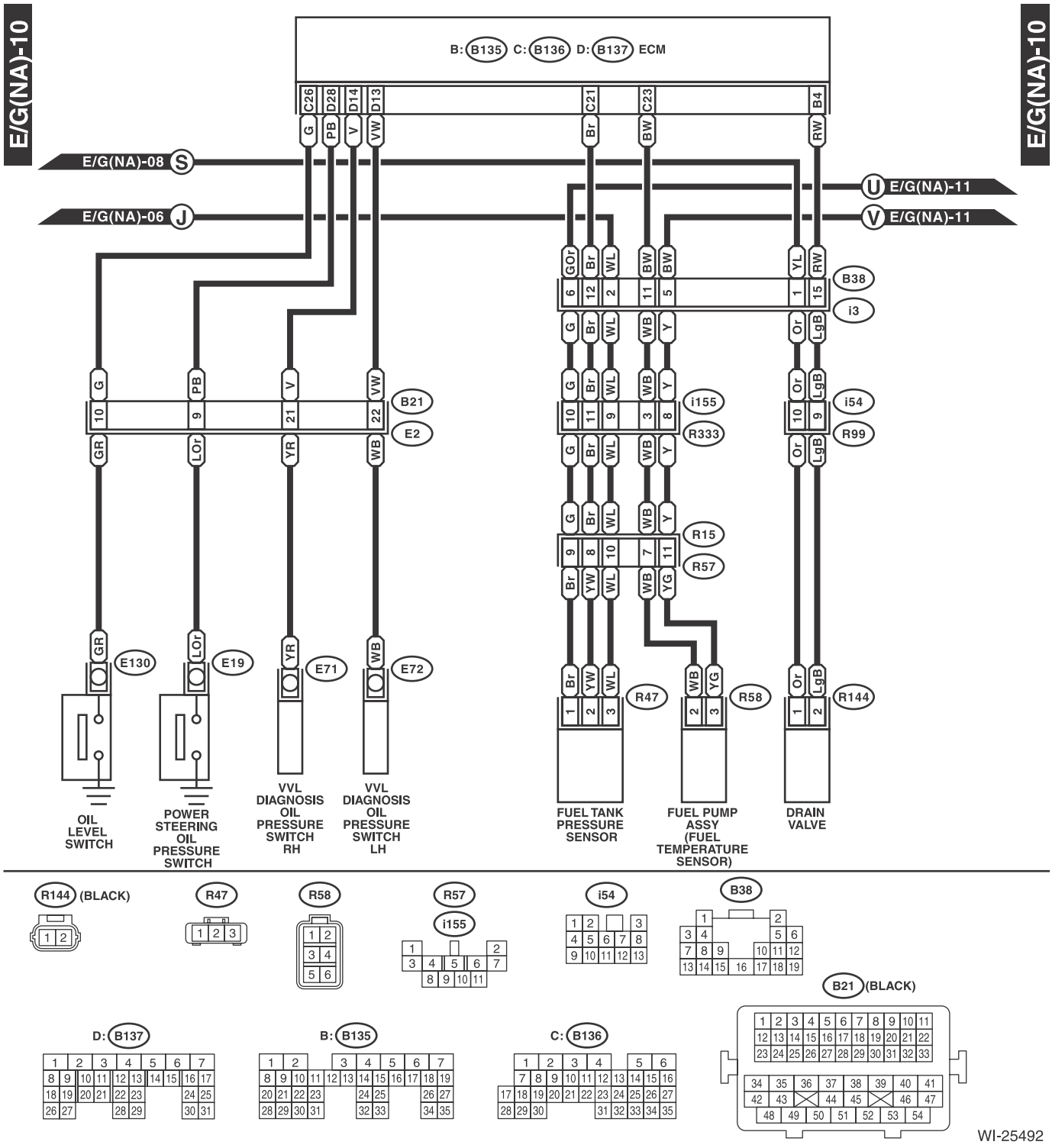
E/G(NA)-10
E/G(NA)-10
B: B135 C: B136 D: B137 ECM
C26 D28 D14 D13 C21 C23 B4
G PB V VW Br BW RW
E/G(NA)-08 S
E/G(NA)-06 J
U E/G(NA)-11
V E/G(NA)-11
B38
i3
B21
E2
i155
R333
i54
R99
R15
R57
R47
R58
R144
E130
E19
E71
E72
OIL LEVEL SWITCH
POWER STEERING OIL PRESSURE SWITCH
VVL DIAGNOSIS OIL PRESSURE SWITCH RH
VVL DIAGNOSIS OIL PRESSURE SWITCH LH
FUEL TANK PRESSURE SENSOR
FUEL PUMP ASSY (FUEL TEMPERATURE SENSOR)
DRAIN VALVE
R144 (BLACK)
R47
R58
R57
i155
i54
B38
B21 (BLACK)
D: B137
B: B135
C: B136
WI-25492

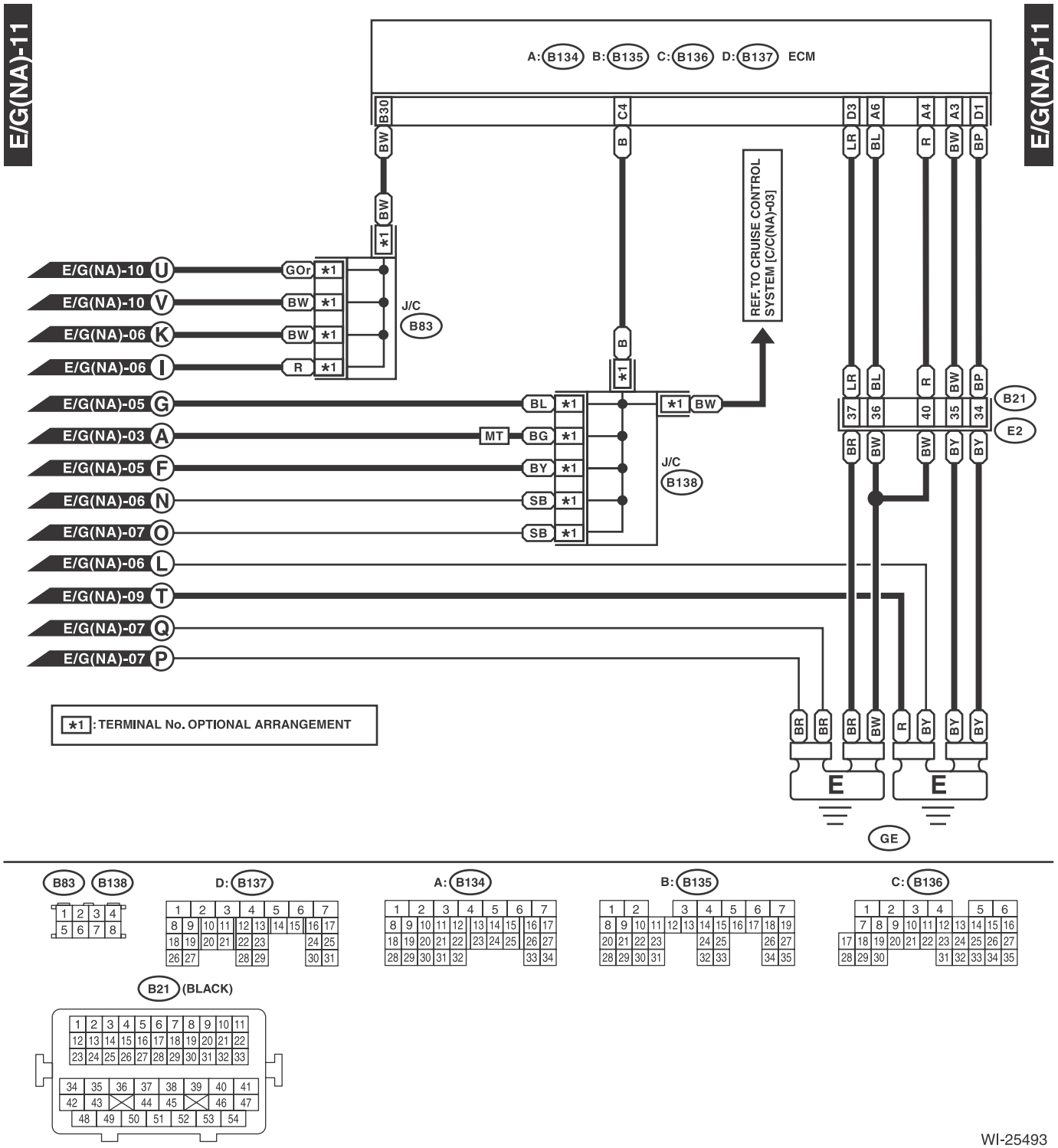
E/G(NA)-11
E/G(NA)-11
A: B134 B: B135 C: B136 D: B137 ECM
B30
C4
D3
A6
A4
A3
D1
BW
B
LR
BL
R
BW
BP
*1
REF. TO CRUISE CONTROL SYSTEM [C/C(NA)-03]
E/G(NA)-10 U
E/G(NA)-10 V
E/G(NA)-06 K
E/G(NA)-06 I
GOr
BW
R
J/C B83
E/G(NA)-05 G
E/G(NA)-03 A
E/G(NA)-05 F
E/G(NA)-06 N
E/G(NA)-07 O
E/G(NA)-06 L
E/G(NA)-09 T
E/G(NA)-07 Q
E/G(NA)-07 P
BL
MT
BG
BY
SB
SB
J/C B138
37
36
40
35
34
B21
E2
BR
BW
BW
BY
BY
*1 : TERMINAL No. OPTIONAL ARRANGEMENT
E
E
GE

B83 B138
D: B137
A: B134
B: B135
C: B136
B21 (BLACK)

WI-25493

2. 2.5 L TURBO MODEL

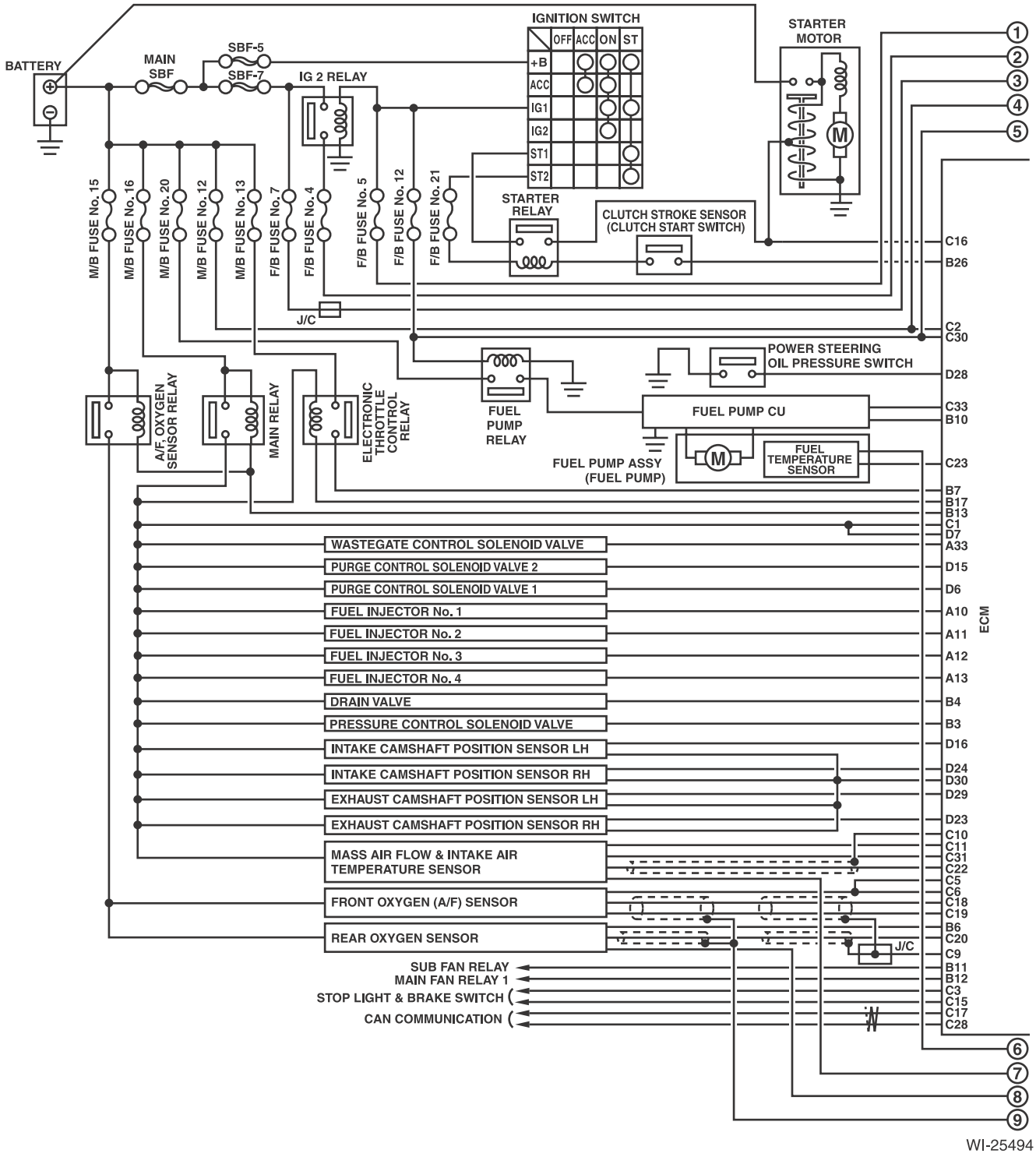

WI-25494

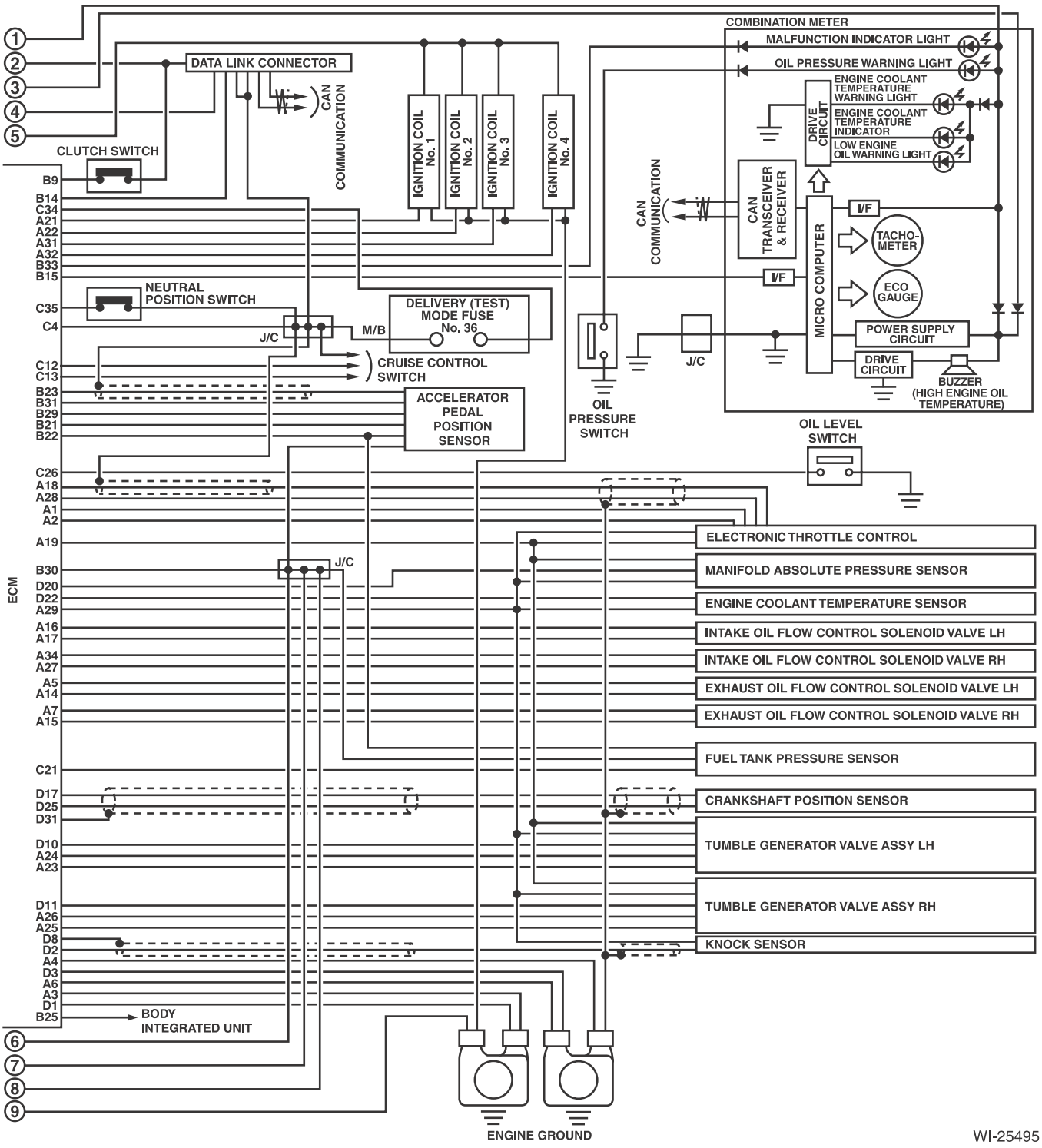
COMBINATION METER
MALFUNCTION INDICATOR LIGHT
OIL PRESSURE WARNING LIGHT
ENGINE COOLANT TEMPERATURE WARNING LIGHT
ENGINE COOLANT TEMPERATURE INDICATOR
LOW ENGINE OIL WARNING LIGHT
DRIVE CIRCUIT
DATA LINK CONNECTOR
CAN COMMUNICATION
CLUTCH SWITCH
IGNITION COIL No. 1
IGNITION COIL No. 2
IGNITION COIL No. 3
IGNITION COIL No. 4
CAN TRANSCEIVER & RECEIVER
MICRO COMPUTER
I/F
TACHO-METER
ECO GAUGE
POWER SUPPLY CIRCUIT
DRIVE CIRCUIT
BUZZER (HIGH ENGINE OIL TEMPERATURE)
NEUTRAL POSITION SWITCH
DELIVERY (TEST) MODE FUSE No. 36
M/B
J/C
CRUISE CONTROL SWITCH
ACCELERATOR PEDAL POSITION SENSOR
OIL PRESSURE SWITCH
OIL LEVEL SWITCH
ECM
B9
B14
C34
A21
A22
A31
A32
B33
B15
C35
C4
C12
C13
B23
B31
B29
B21
B22
C26
A18
A28
A1
A2
A19
B30
D20
D22
A29
A16
A17
A34
A27
A5
A14
A7
A15
C21
D17
D25
D31
D10
A24
A23
D11
A26
A25
D8
D2
A4
D3
A6
A3
D1
B25
BODY INTEGRATED UNIT
ELECTRONIC THROTTLE CONTROL
MANIFOLD ABSOLUTE PRESSURE SENSOR
ENGINE COOLANT TEMPERATURE SENSOR
INTAKE OIL FLOW CONTROL SOLENOID VALVE LH
INTAKE OIL FLOW CONTROL SOLENOID VALVE RH
EXHAUST OIL FLOW CONTROL SOLENOID VALVE LH
EXHAUST OIL FLOW CONTROL SOLENOID VALVE RH
FUEL TANK PRESSURE SENSOR
CRANKSHAFT POSITION SENSOR
TUMBLE GENERATOR VALVE ASSY LH
TUMBLE GENERATOR VALVE ASSY RH
KNOCK SENSOR
ENGINE GROUND
WI-25495

E/G(TB)-01

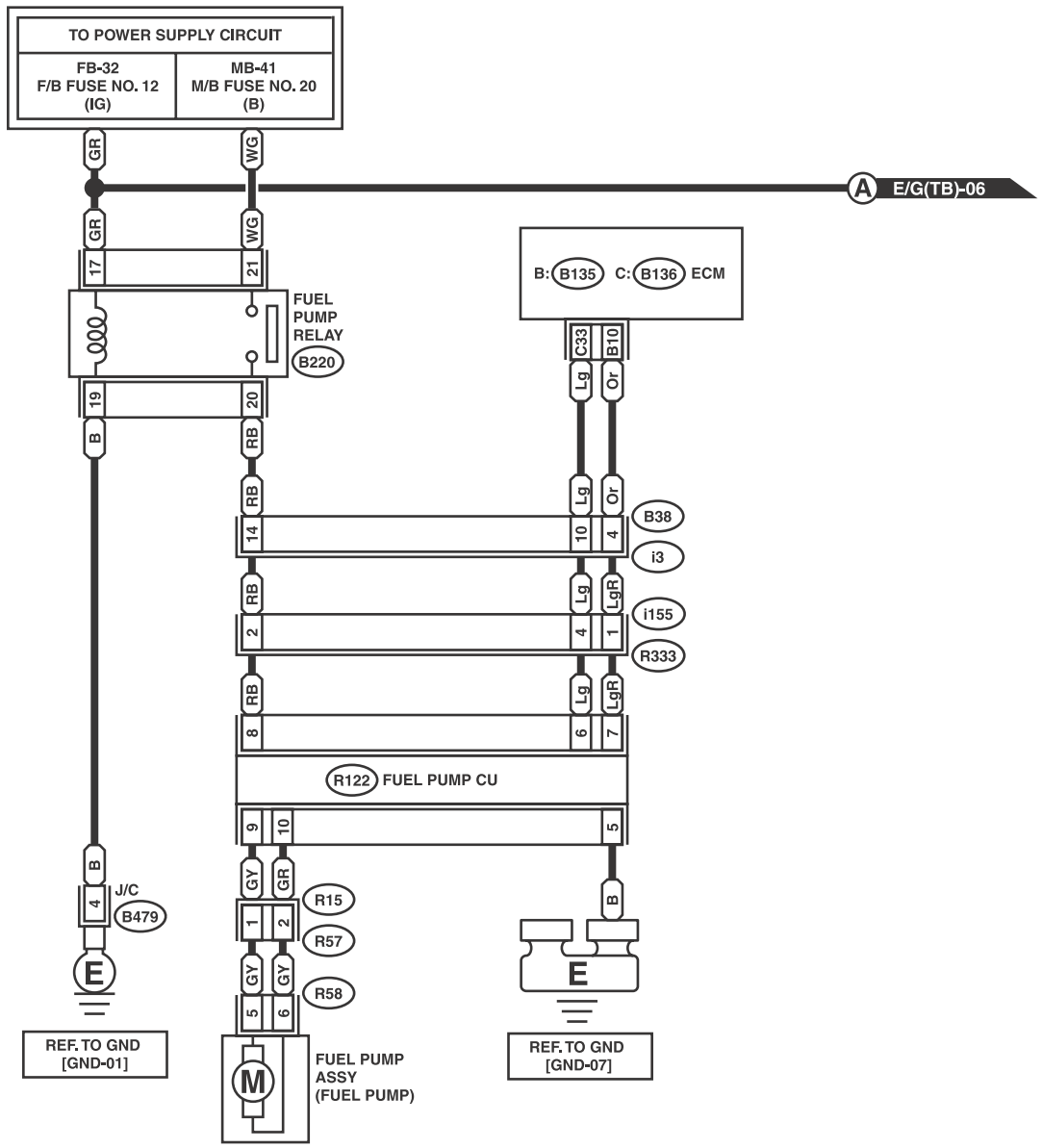

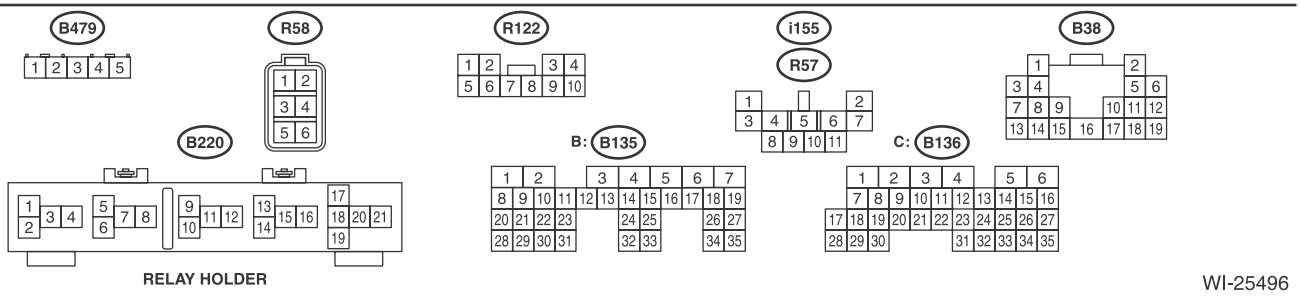

WI-25496

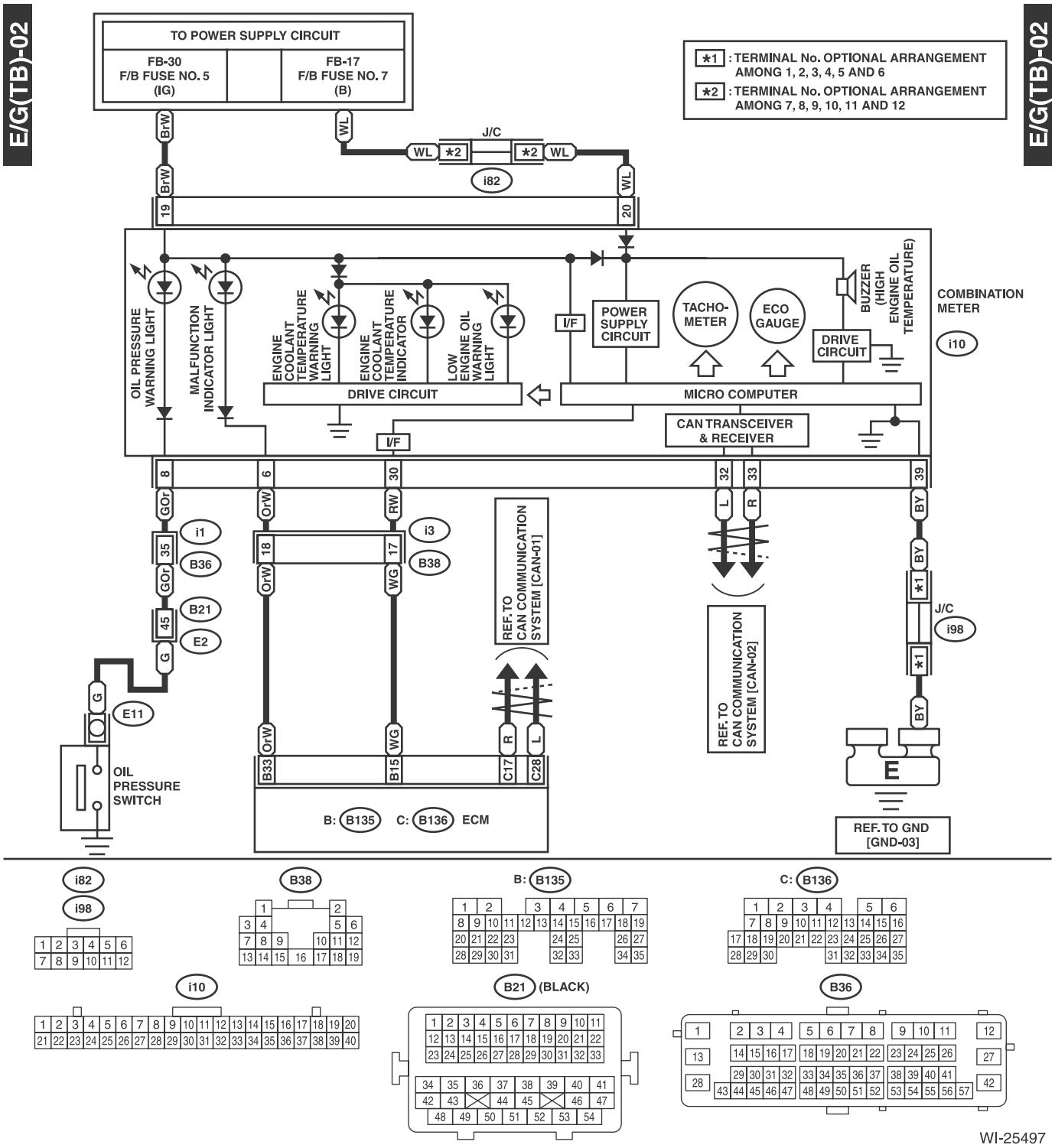
E/G(TB)-02
E/G(TB)-02
TO POWER SUPPLY CIRCUIT
FB-30
F/B FUSE NO. 5
(IG)
FB-17
F/B FUSE NO. 7
(B)
*1 : TERMINAL No. OPTIONAL ARRANGEMENT AMONG 1, 2, 3, 4, 5 AND 6
*2 : TERMINAL No. OPTIONAL ARRANGEMENT AMONG 7, 8, 9, 10, 11 AND 12
J/C
i82
OIL PRESSURE WARNING LIGHT
MALFUNCTION INDICATOR LIGHT
ENGINE COOLANT TEMPERATURE WARNING LIGHT
ENGINE COOLANT TEMPERATURE INDICATOR
LOW ENGINE OIL WARNING LIGHT
DRIVE CIRCUIT
I/F
POWER SUPPLY CIRCUIT
TACHO-METER
ECO GAUGE
BUZZER (HIGH ENGINE OIL TEMPERATURE)
DRIVE CIRCUIT
COMBINATION METER
i10
MICRO COMPUTER
CAN TRANSCEIVER & RECEIVER
I/F
REF. TO CAN COMMUNICATION SYSTEM [CAN-01]
REF. TO CAN COMMUNICATION SYSTEM [CAN-02]
J/C
i98
i1
B36
B21
E2
E11
OIL PRESSURE SWITCH
i3
B38
B: B135 C: B136 ECM
E
REF. TO GND [GND-03]
i82
i98
B38
B: B135
C: B136
i10
B21 (BLACK)
B36

WI-25497

E/G(TB)-03

E/G(TB)-03

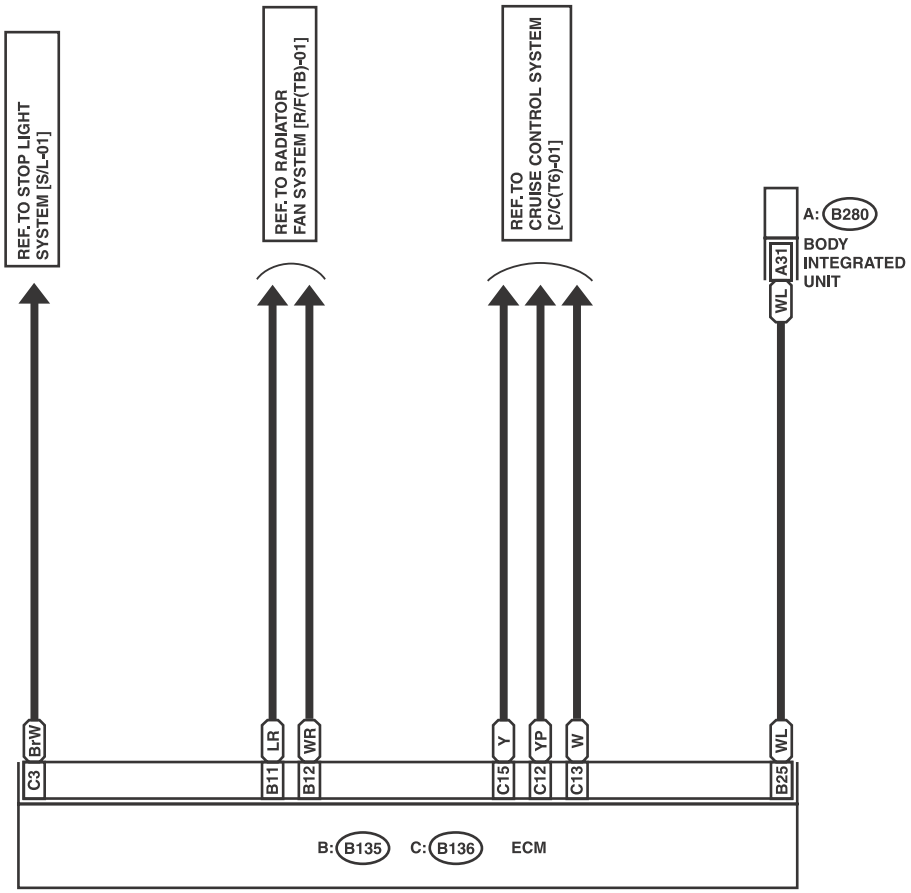

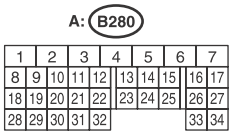

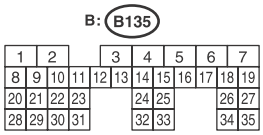

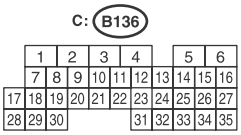

WI-25498

E/G(TB)-04

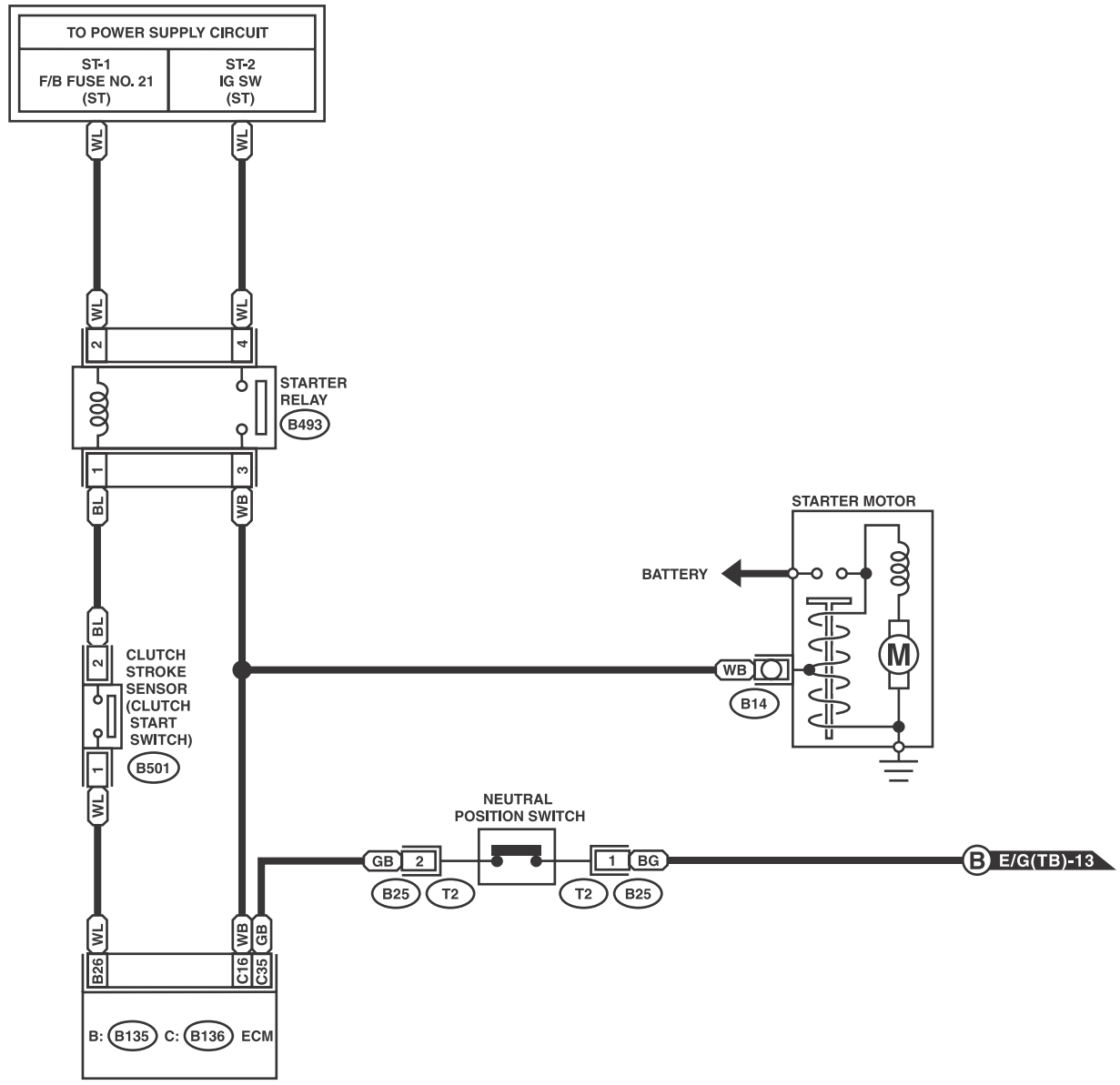

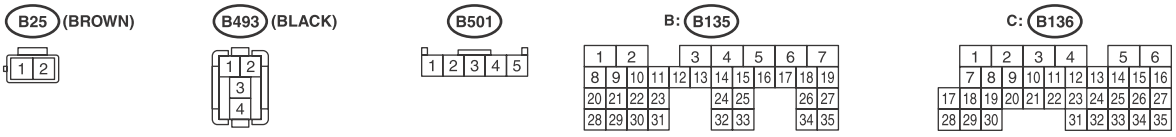

WI-25499

E/G(TB)-05

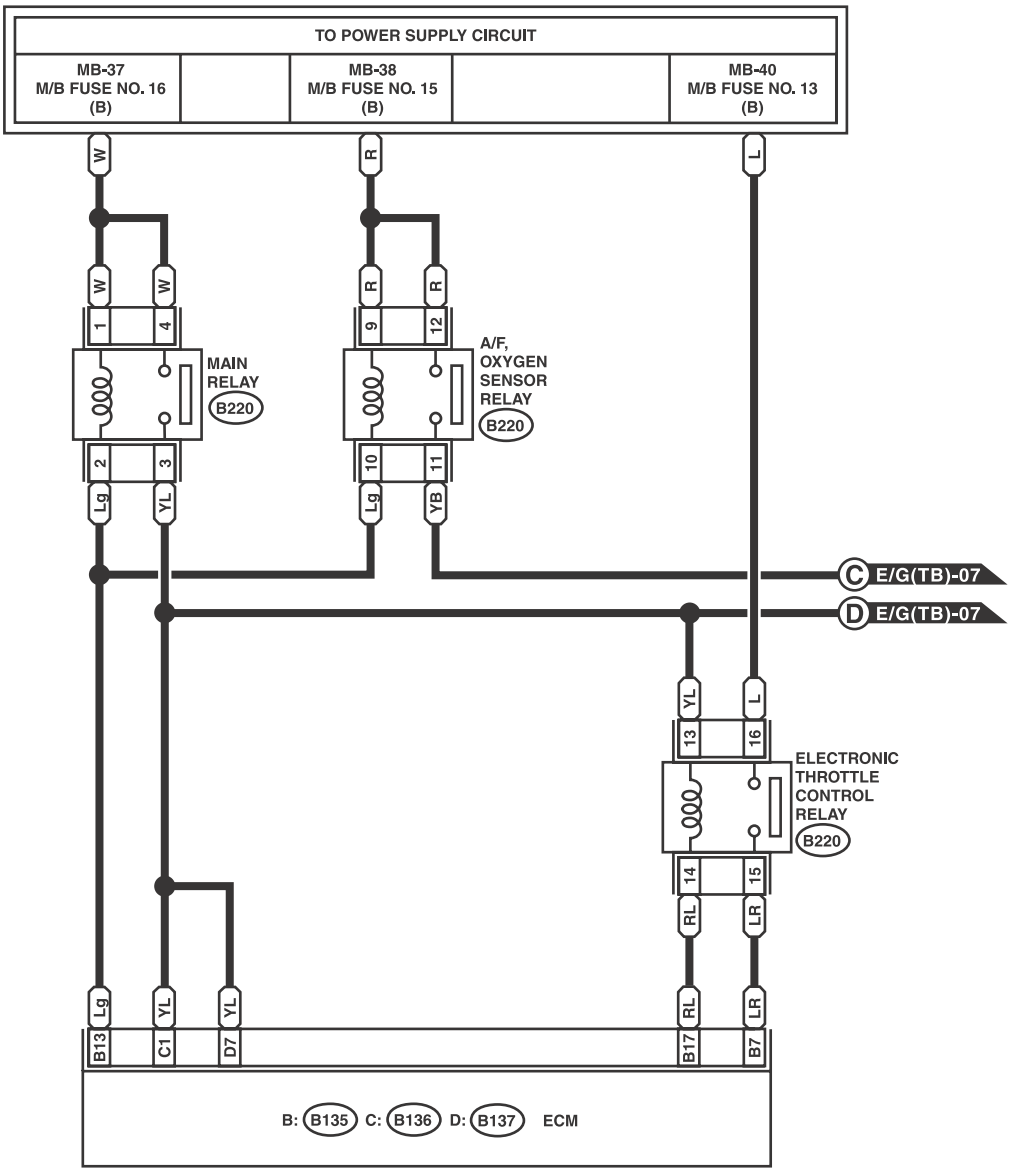

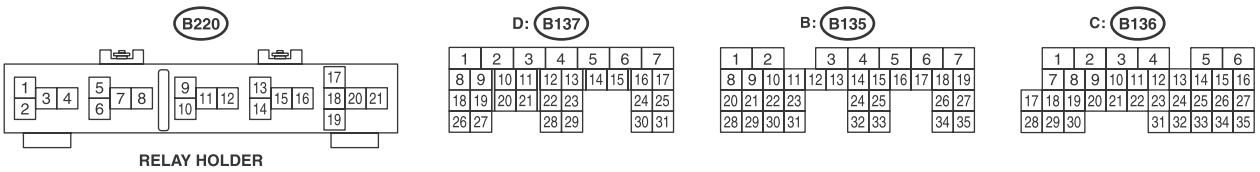

WI-25500

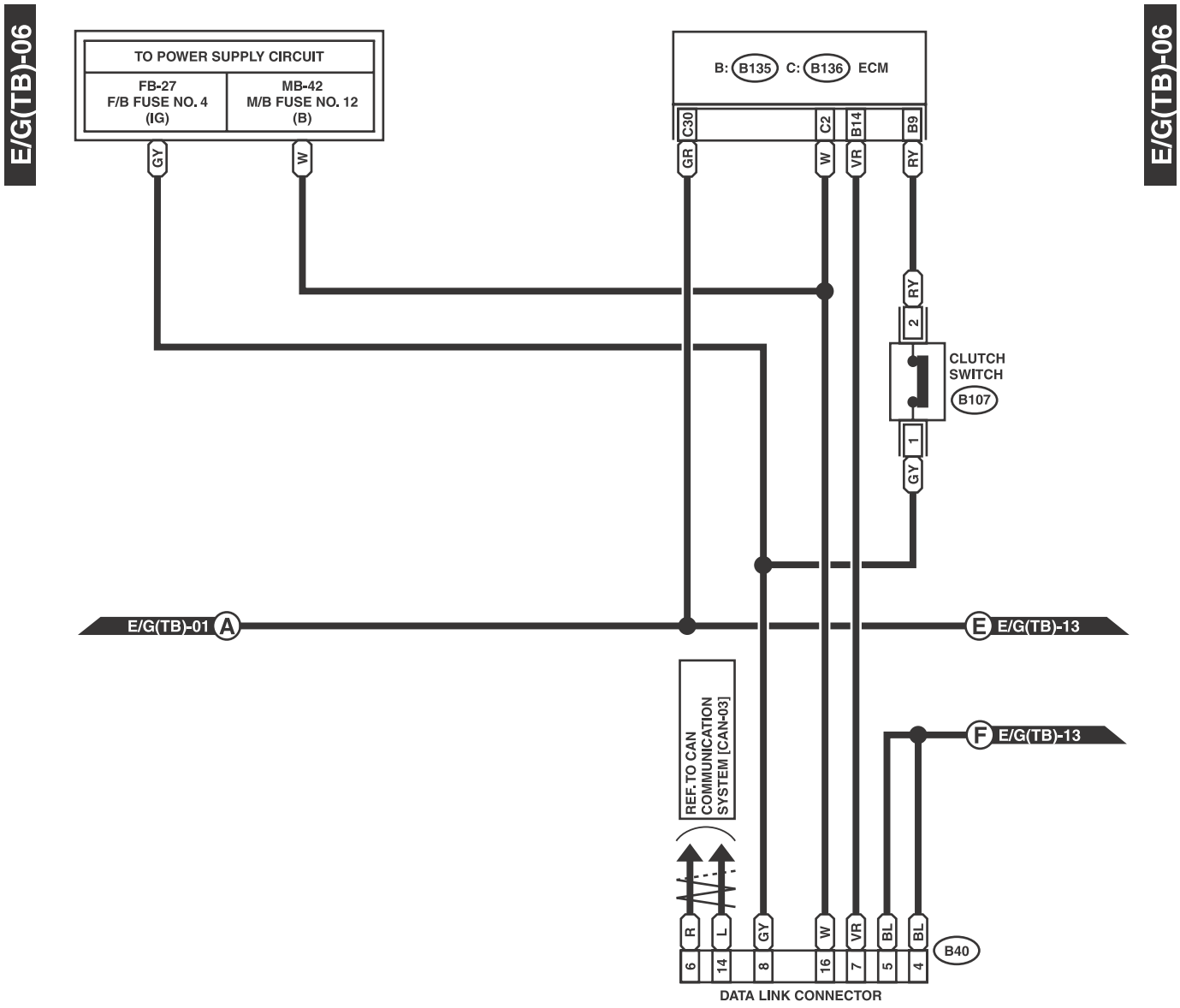
E/G(TB)-06
E/G(TB)-06
TO POWER SUPPLY CIRCUIT
FB-27
F/B FUSE NO. 4
(IG)
MB-42
M/B FUSE NO. 12
(B)
GY
W
B: B135 C: B136 ECM
C30
C2
B14
B9
GR
W
VR
RY
RY
2
CLUTCH SWITCH
B107
1
GY
E/G(TB)-01 A
E E/G(TB)-13
REF. TO CAN COMMUNICATION SYSTEM [CAN-03]
F E/G(TB)-13
R
L
GY
W
VR
BL
BL
B40
6
14
8
16
7
5
4
DATA LINK CONNECTOR

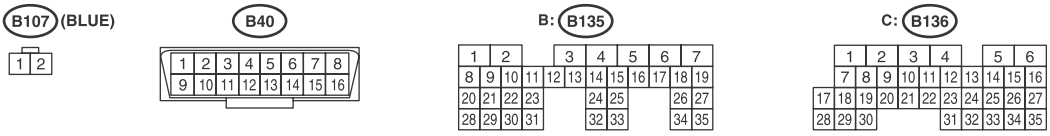
B107 (BLUE)
1 2
B40
1 2 3 4 5 6 7 8
9 10 11 12 13 14 15 16
B: B135
1 2 3 4 5 6 7
8 9 10 11 12 13 14 15 16 17 18 19
20 21 22 23 24 25 26 27
28 29 30 31 32 33 34 35
C: B136
1 2 3 4 5 6
7 8 9 10 11 12 13 14 15 16
17 18 19 20 21 22 23 24 25 26 27
28 29 30 31 32 33 34 35

WI-25501

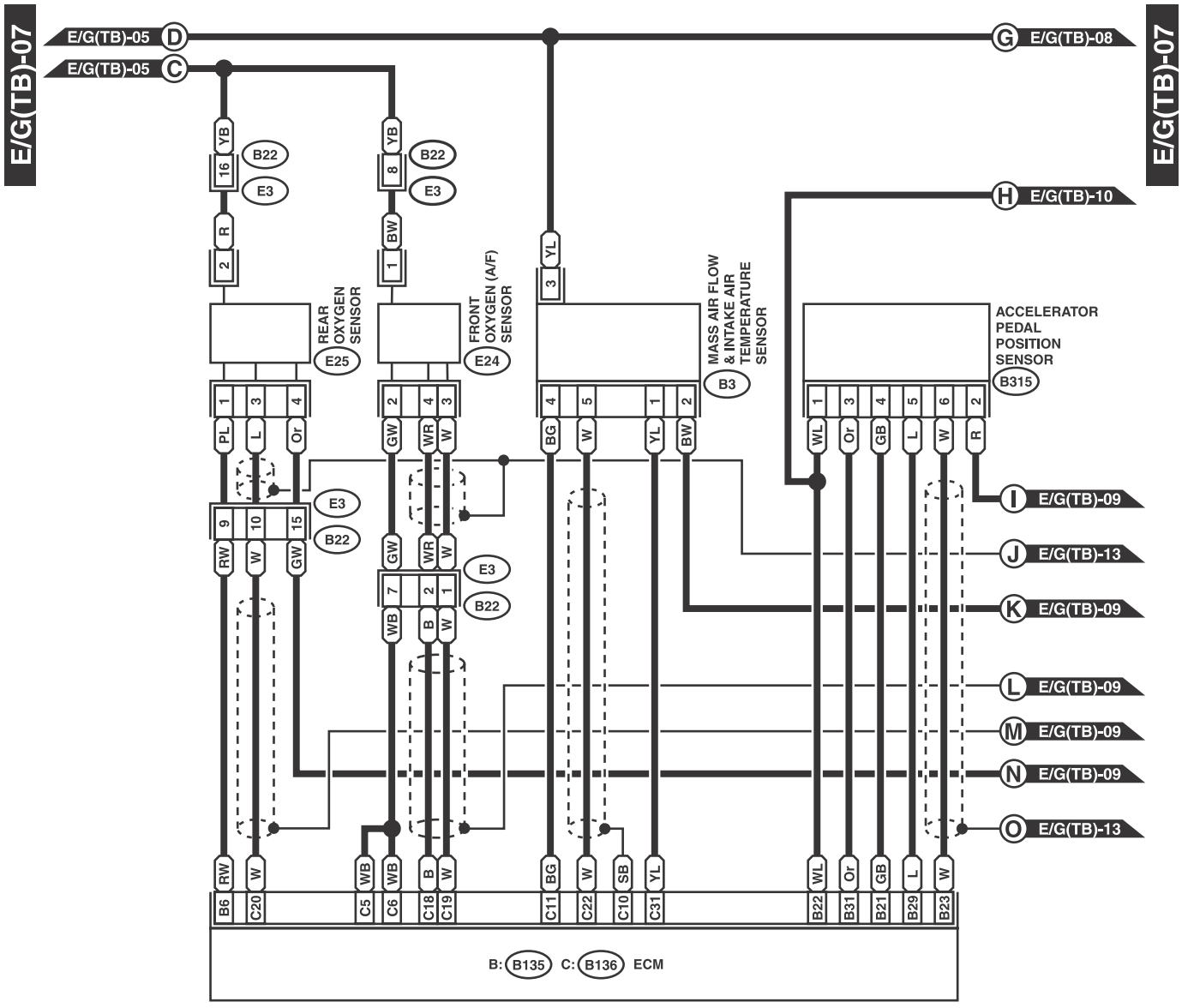
E/G(TB)-07
E/G(TB)-05 D
E/G(TB)-05 C
G E/G(TB)-08
H E/G(TB)-10
I E/G(TB)-09
J E/G(TB)-13
K E/G(TB)-09
L E/G(TB)-09
M E/G(TB)-09
N E/G(TB)-09
O E/G(TB)-13
REAR OXYGEN SENSOR E25
FRONT OXYGEN (A/F) SENSOR E24
MASS AIR FLOW & INTAKE AIR TEMPERATURE SENSOR B3
ACCELERATOR PEDAL POSITION SENSOR B315
B22
E3
B: B135 C: B136 ECM

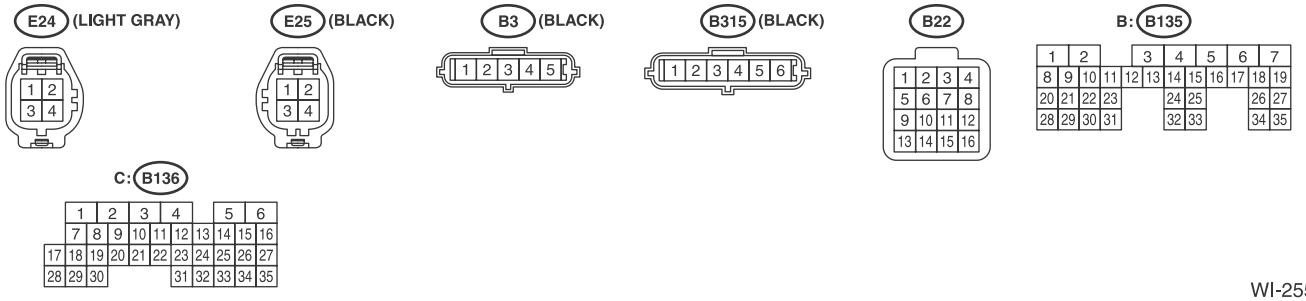
E24 (LIGHT GRAY)
E25 (BLACK)
B3 (BLACK)
B315 (BLACK)
B22
B: B135
C: B136

WI-25502

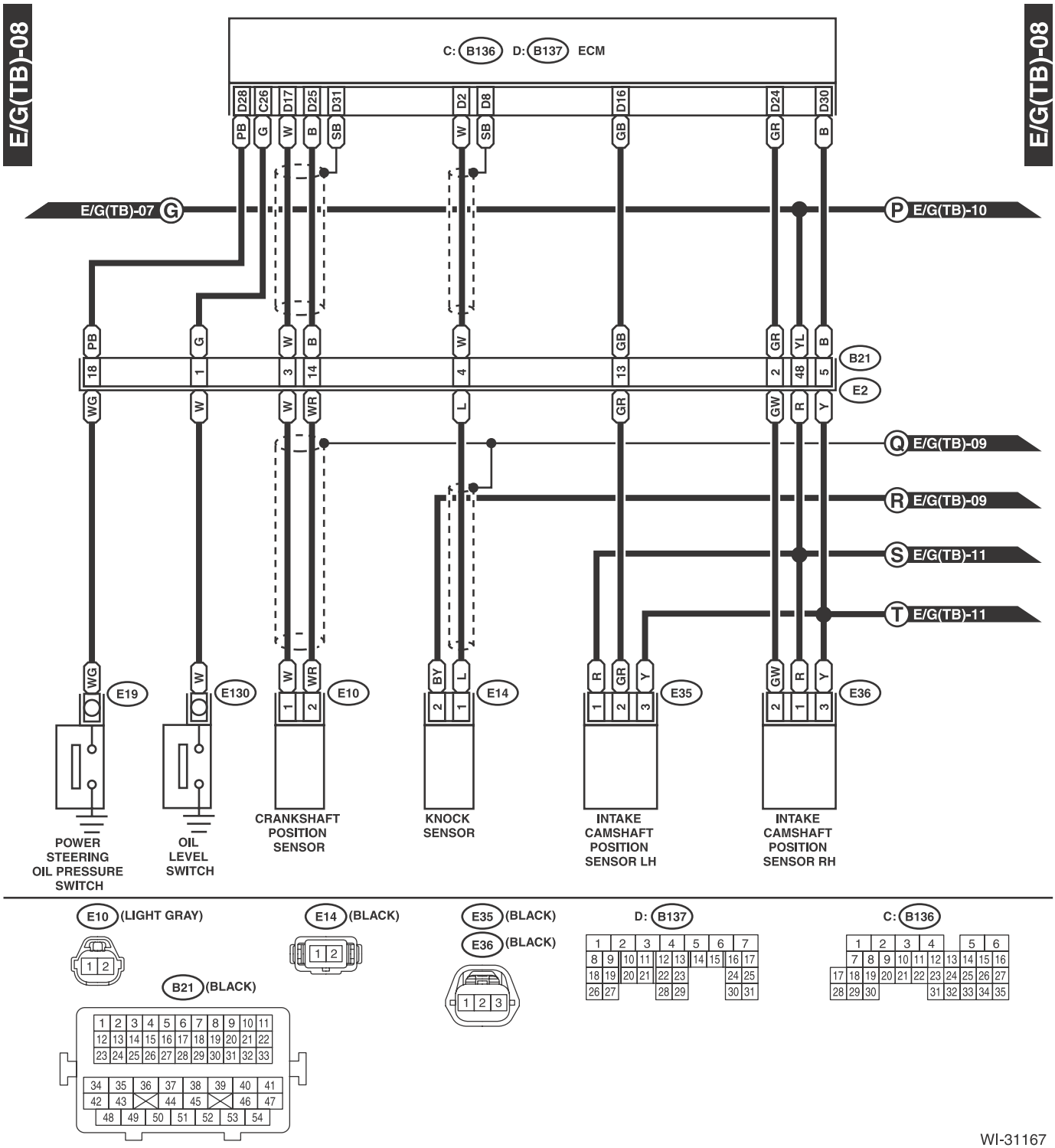
E/G(TB)-08
E/G(TB)-08
C: B136 D: B137 ECM
D28 C26 D17 D25 D31 D2 D8 D16 D24 D30
PB G W B SB W SB GB GR B
E/G(TB)-07 G
P E/G(TB)-10
PB G W B W GB GR YL B
18 1 3 14 4 13 2 48 5
B21
E2
WG W W WR L GR GW R Y
Q E/G(TB)-09
R E/G(TB)-09
S E/G(TB)-11
T E/G(TB)-11
WG E19
W E130
W WR E10
BY L E14
R GR Y E35
GW R Y E36
POWER STEERING OIL PRESSURE SWITCH
OIL LEVEL SWITCH
CRANKSHAFT POSITION SENSOR
KNOCK SENSOR
INTAKE CAMSHAFT POSITION SENSOR LH
INTAKE CAMSHAFT POSITION SENSOR RH

E10 (LIGHT GRAY)
E14 (BLACK)
E35 (BLACK)
E36 (BLACK)
D: B137
C: B136
B21 (BLACK)

WI-31167

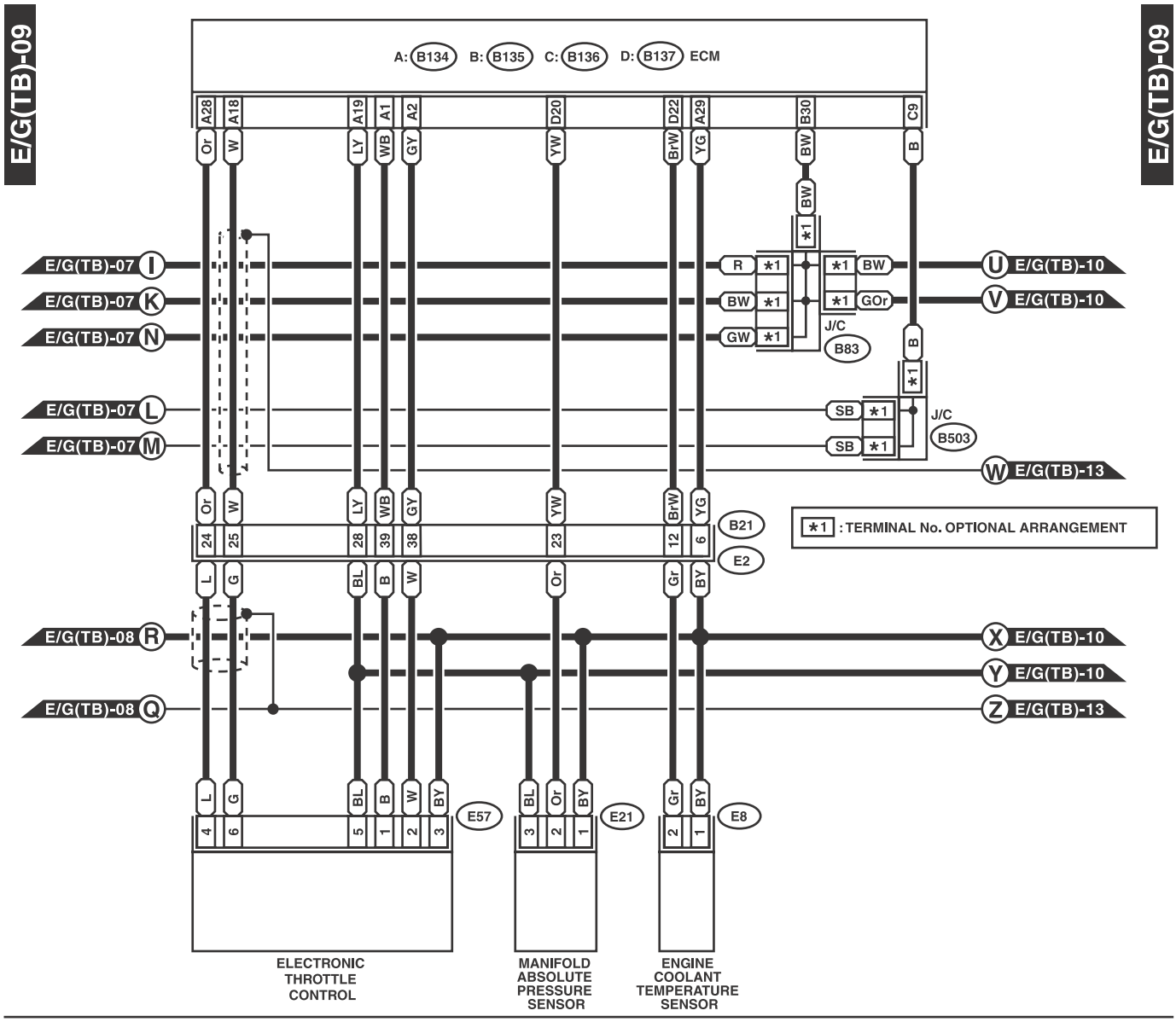
E/G(TB)-09
E/G(TB)-09
A: B134 B: B135 C: B136 D: B137 ECM
A28 A18 A19 A1 A2 D20 D22 A29 B30 C9
Or W LY WB GY YW BrW YG BW B
E/G(TB)-07 I
E/G(TB)-07 K
E/G(TB)-07 N
E/G(TB)-07 L
E/G(TB)-07 M
E/G(TB)-08 R
E/G(TB)-08 Q
R ★1
BW ★1
GW ★1
★1 BW
★1 GOr
J/C B83
SB ★1
SB ★1
J/C B503
E/G(TB)-10 U
E/G(TB)-10 V
E/G(TB)-13 W
E/G(TB)-10 X
E/G(TB)-10 Y
E/G(TB)-13 Z
B21
E2
★1 : TERMINAL No. OPTIONAL ARRANGEMENT
L G BL B W Or Gr BY
E57
E21
E8
ELECTRONIC THROTTLE CONTROL
MANIFOLD ABSOLUTE PRESSURE SENSOR
ENGINE COOLANT TEMPERATURE SENSOR

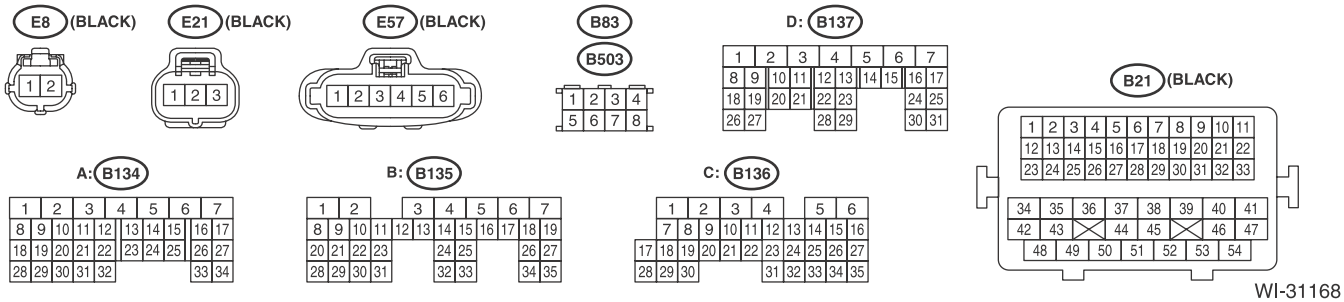
E8 (BLACK)
E21 (BLACK)
E57 (BLACK)
B83
B503
D: B137
B21 (BLACK)
A: B134
B: B135
C: B136

WI-31168

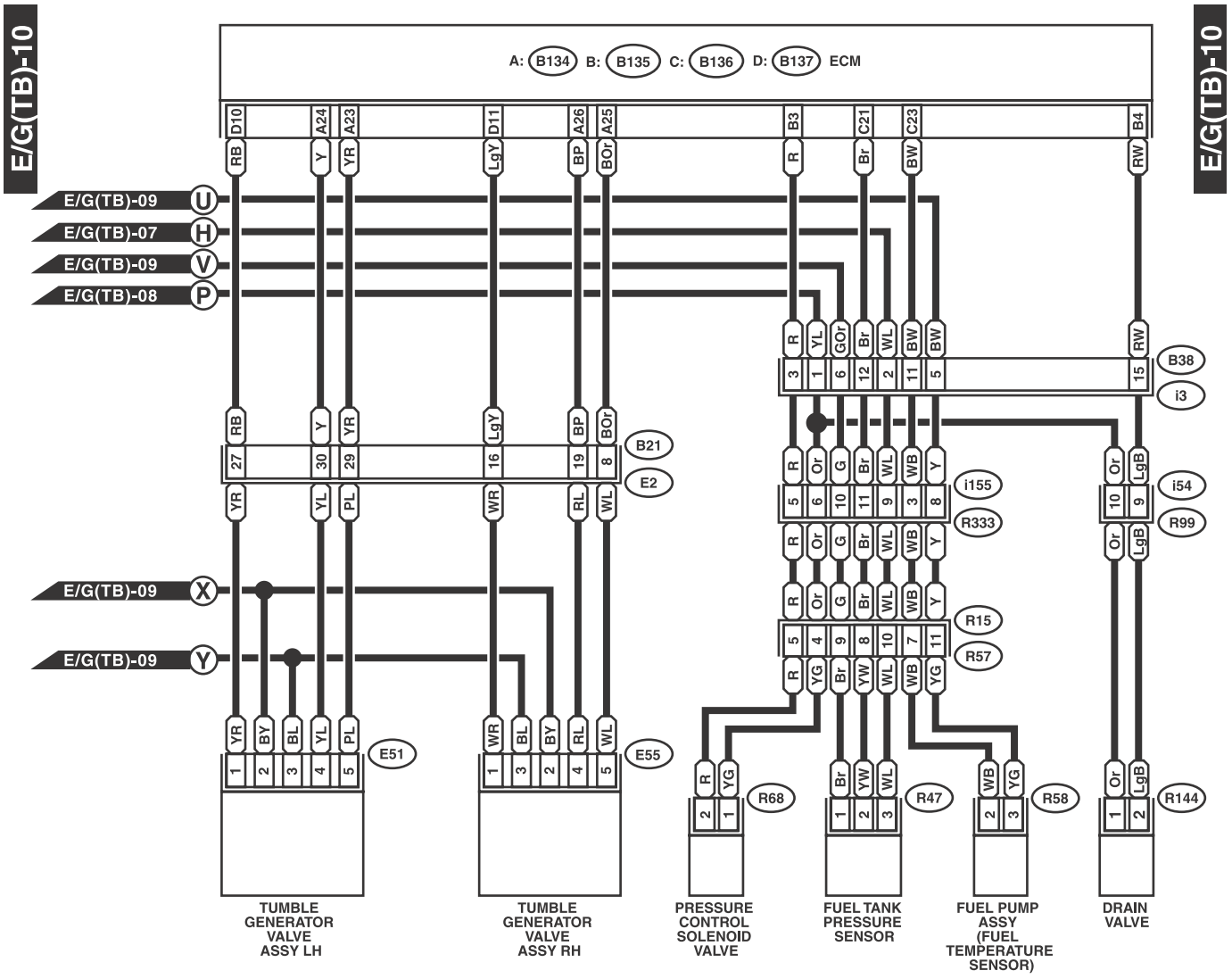
E/G(TB)-10
A: B134 B: B135 C: B136 D: B137 ECM
D10 A24 A23 D11 A26 A25 B3 C21 C23 B4
RB Y YR LgY BP BOr R Br BW RW
E/G(TB)-09 U
E/G(TB)-07 H
E/G(TB)-09 V
E/G(TB)-08 P
B38
i3
B21
E2
i155
R333
i54
R99
E/G(TB)-09 X
E/G(TB)-09 Y
R15
R57
E51
E55
R68
R47
R58
R144
TUMBLE GENERATOR VALVE ASSY LH
TUMBLE GENERATOR VALVE ASSY RH
PRESSURE CONTROL SOLENOID VALVE
FUEL TANK PRESSURE SENSOR
FUEL PUMP ASSY (FUEL TEMPERATURE SENSOR)
DRAIN VALVE

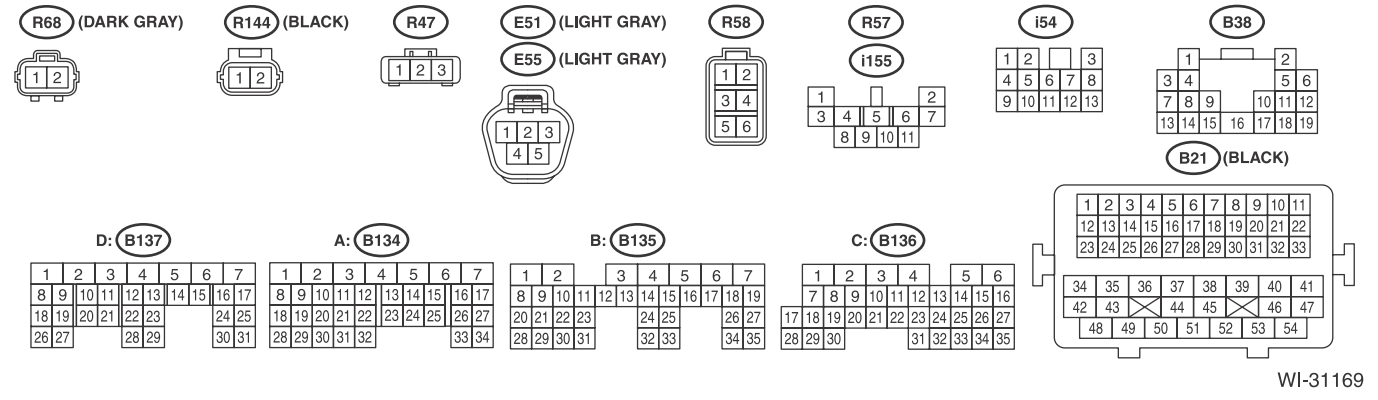
R68 (DARK GRAY)
R144 (BLACK)
R47
E51 (LIGHT GRAY)
E55 (LIGHT GRAY)
R58
R57
i155
i54
B38
B21 (BLACK)
D: B137
A: B134
B: B135
C: B136

WI-31169

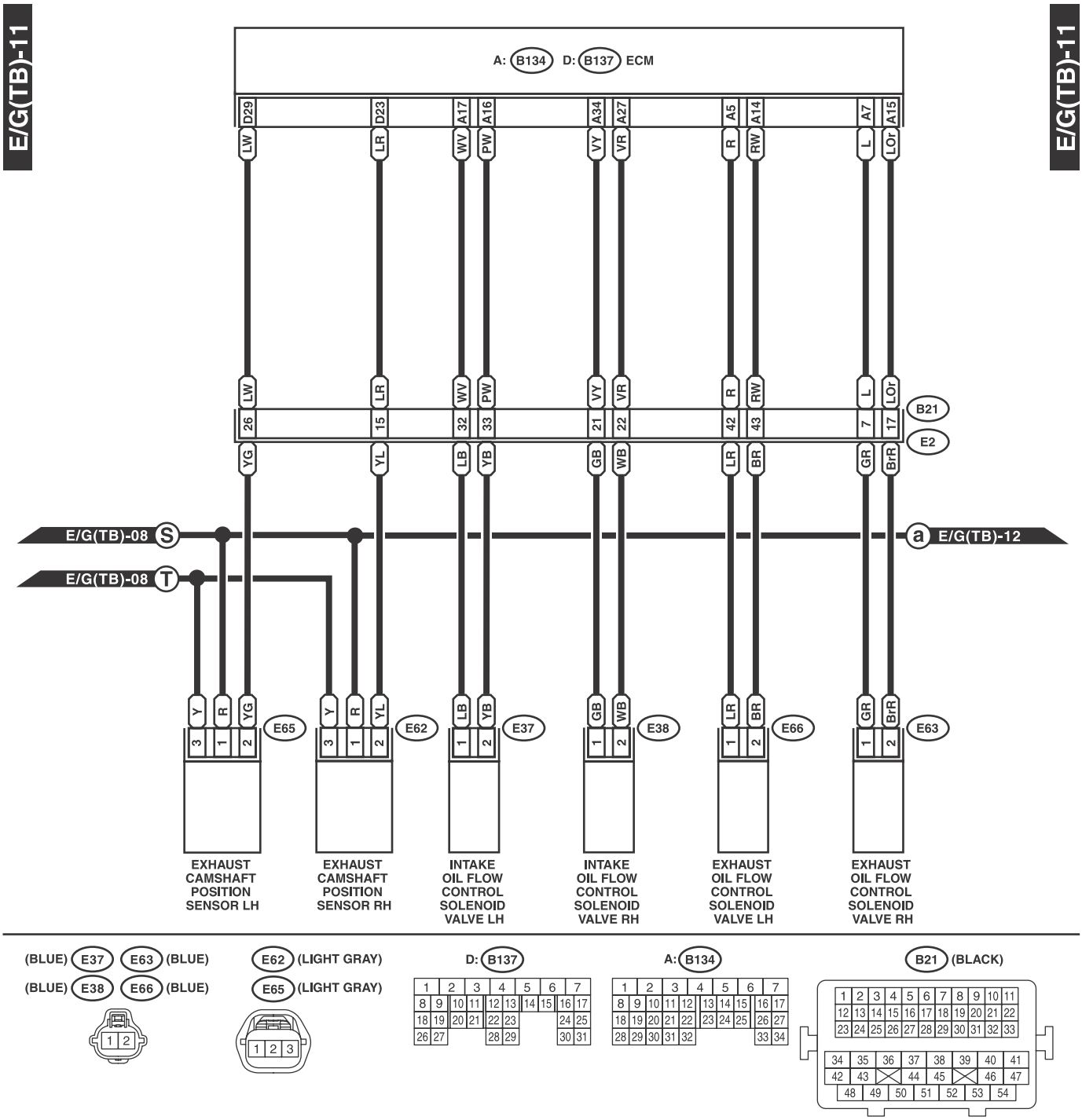
E/G(TB)-11
E/G(TB)-11
A: B134 D: B137 ECM
D29 D23 A17 A16 A34 A27 A5 A14 A7 A15
LW LR WV PW VY VR R RW L LOr
B21
E2
26 15 32 33 21 22 42 43 7 17
YG YL LB YB GB WB LR BR GR BrR
E/G(TB)-08 S
E/G(TB)-08 T
a E/G(TB)-12
Y R YG E65 3 1 2
Y R YL E62 3 1 2
LB YB E37 1 2
GB WB E38 1 2
LR BR E66 1 2
GR BrR E63 1 2
EXHAUST CAMSHAFT POSITION SENSOR LH
EXHAUST CAMSHAFT POSITION SENSOR RH
INTAKE OIL FLOW CONTROL SOLENOID VALVE LH
INTAKE OIL FLOW CONTROL SOLENOID VALVE RH
EXHAUST OIL FLOW CONTROL SOLENOID VALVE LH
EXHAUST OIL FLOW CONTROL SOLENOID VALVE RH
(BLUE) E37 E63 (BLUE)
(BLUE) E38 E66 (BLUE)
E62 (LIGHT GRAY)
E65 (LIGHT GRAY)
D: B137
A: B134
B21 (BLACK)

WI-31170

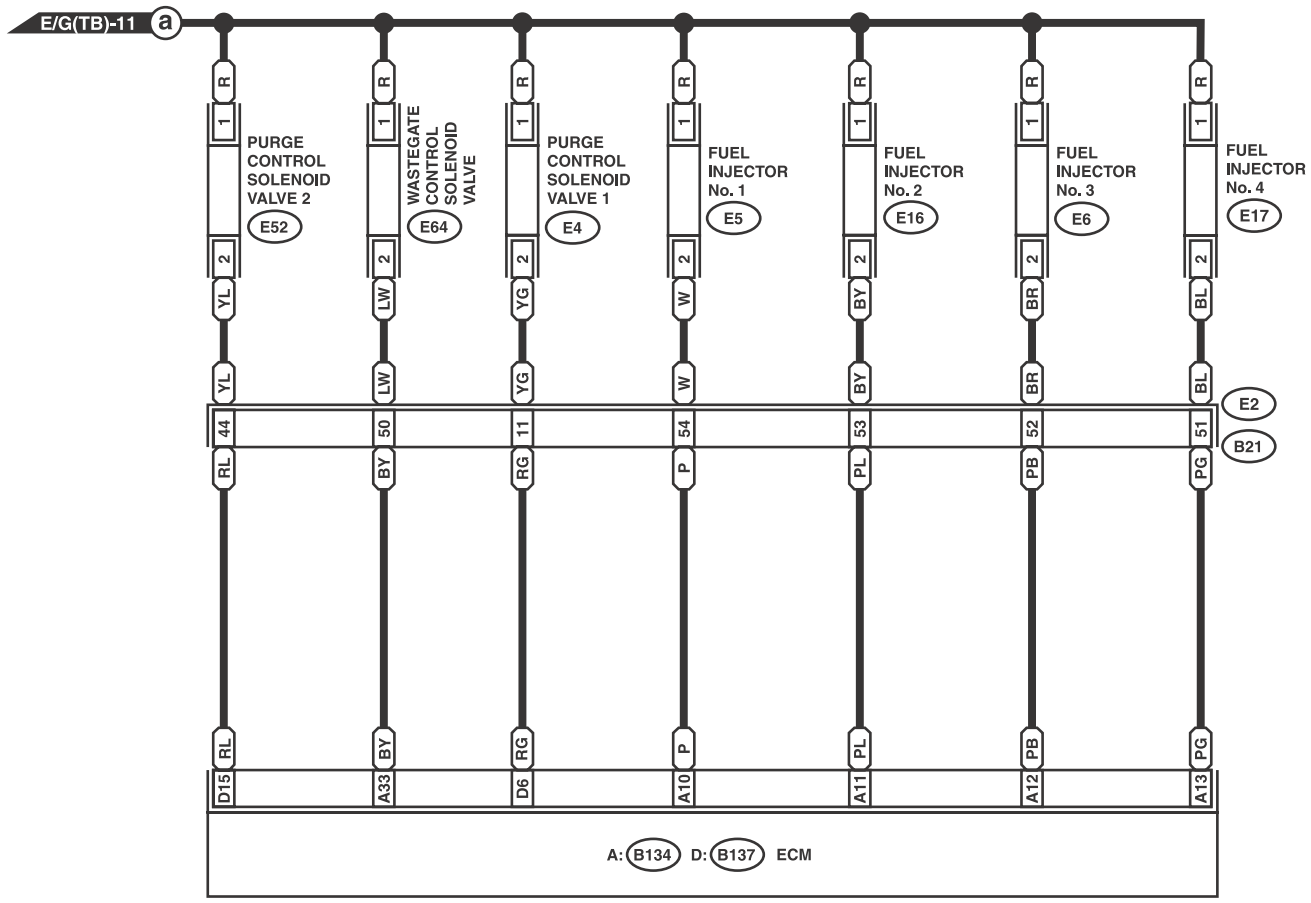
E/G(TB)-11 a
PURGE CONTROL SOLENOID VALVE 2
E52
WASTEGATE CONTROL SOLENOID VALVE
E64
PURGE CONTROL SOLENOID VALVE 1
E4
FUEL INJECTOR No. 1
E5
FUEL INJECTOR No. 2
E16
FUEL INJECTOR No. 3
E6
FUEL INJECTOR No. 4
E17
E2
B21
A: B134 D: B137 ECM

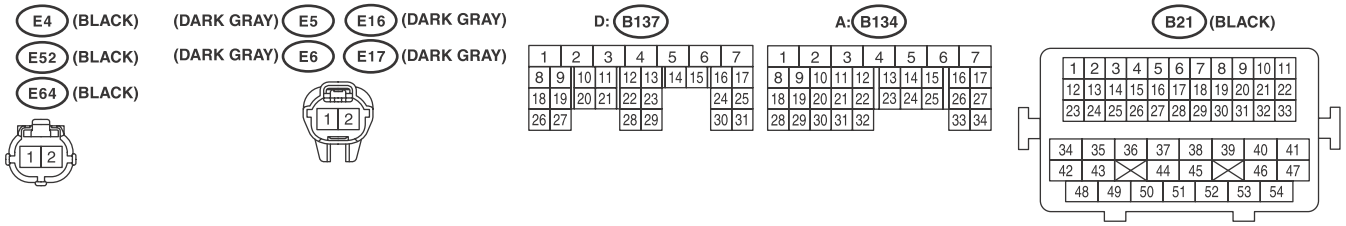
E4 (BLACK)
E52 (BLACK)
E64 (BLACK)
(DARK GRAY) E5
(DARK GRAY) E6
E16 (DARK GRAY)
E17 (DARK GRAY)
D: B137
A: B134
B21 (BLACK)

WI-31171

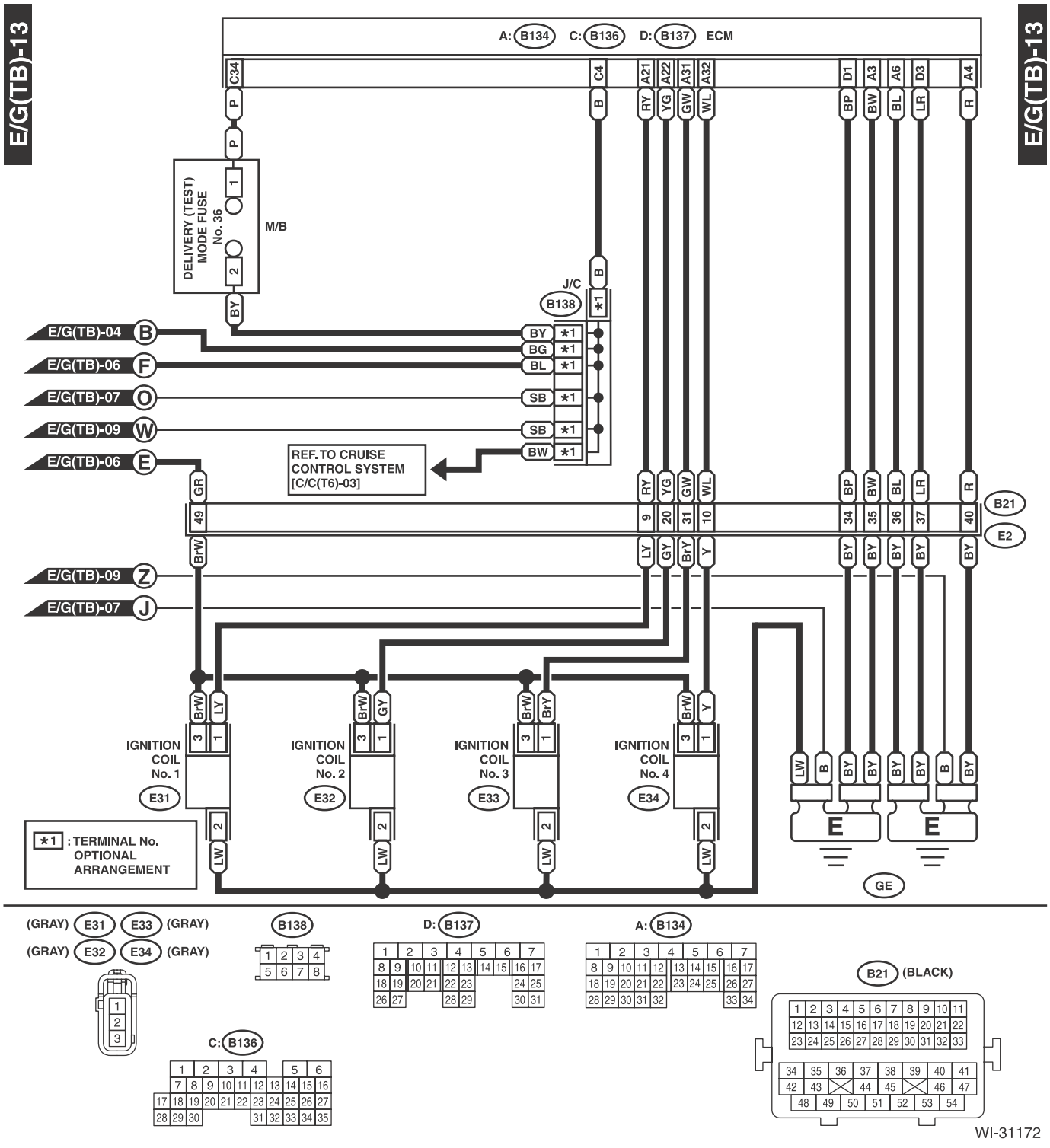
E/G(TB)-13
A: B134 C: B136 D: B137 ECM
C34
C4
A21
A22
A31
A32
D1
A3
A6
D3
A4
P
B
RY
YG
GW
WL
BP
BW
BL
LR
R
DELIVERY (TEST) MODE FUSE No. 36
M/B
J/C B138
BY
BG
BL
SB
BW
*1
E/G(TB)-04 B
E/G(TB)-06 F
E/G(TB)-07 O
E/G(TB)-09 W
E/G(TB)-06 E
REF. TO CRUISE CONTROL SYSTEM [C/C(T6)-03]
GR
49
9
20
31
10
34
35
36
37
40
B21
E2
BrW
LY
GY
BrY
Y
E/G(TB)-09 Z
E/G(TB)-07 J
IGNITION COIL No. 1
IGNITION COIL No. 2
IGNITION COIL No. 3
IGNITION COIL No. 4
E31
E32
E33
E34
LW
B
E
GE
*1 : TERMINAL No. OPTIONAL ARRANGEMENT
(GRAY) E31 E33 (GRAY)
(GRAY) E32 E34 (GRAY)
B138
D: B137
A: B134
B21 (BLACK)
C: B136

WI-31172

3. 3.6 L MODEL

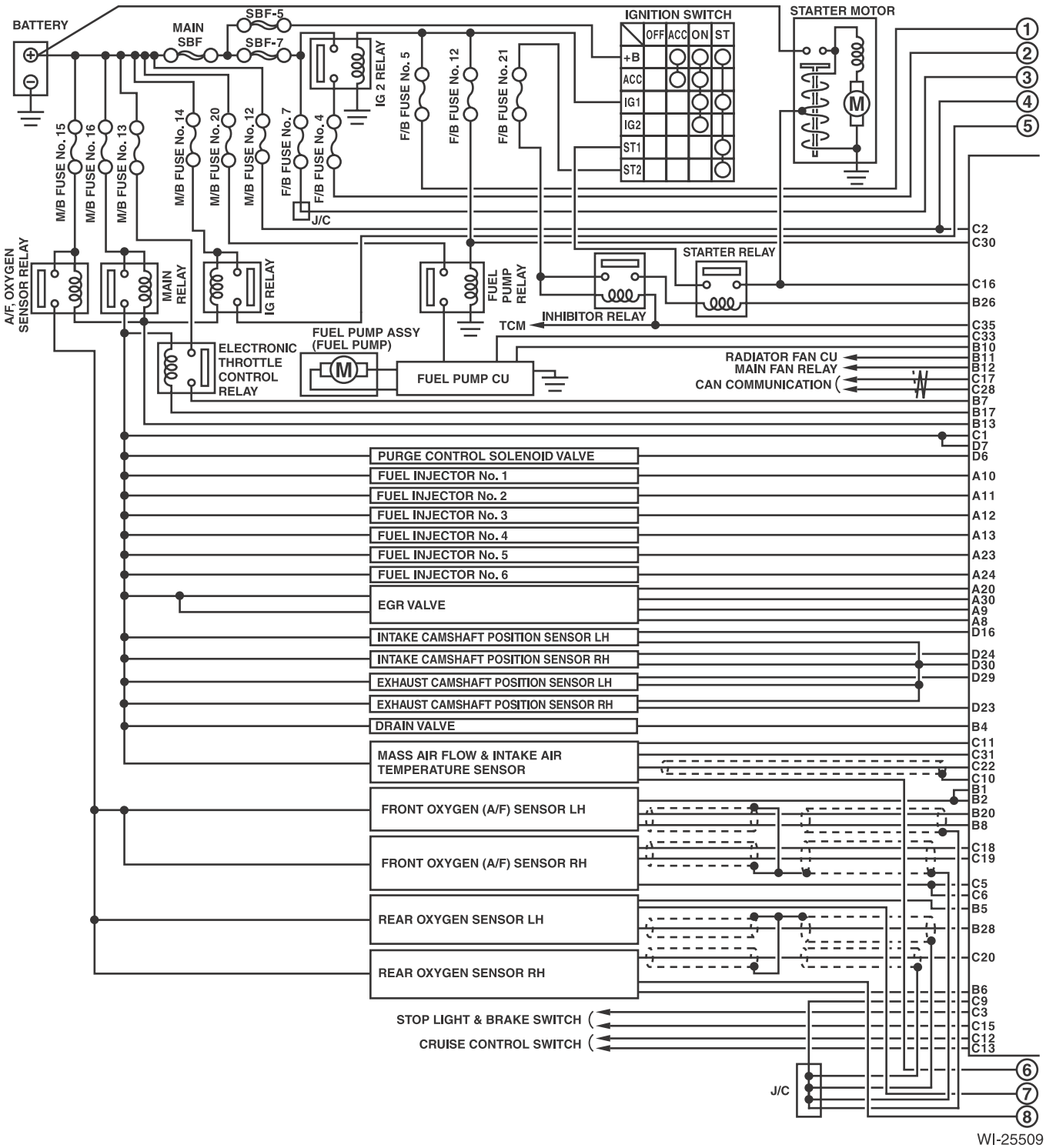
BATTERY
MAIN SBF
SBF-5
SBF-7
IG 2 RELAY
F/B FUSE No. 5
F/B FUSE No. 12
F/B FUSE No. 21
IGNITION SWITCH
OFF ACC ON ST
+B
ACC
IG1
IG2
ST1
ST2
STARTER MOTOR
M/B FUSE No. 15
M/B FUSE No. 16
M/B FUSE No. 13
M/B FUSE No. 14
M/B FUSE No. 20
M/B FUSE No. 12
F/B FUSE No. 7
F/B FUSE No. 4
J/C
A/F, OXYGEN SENSOR RELAY
MAIN RELAY
IG RELAY
FUEL PUMP RELAY
STARTER RELAY
INHIBITOR RELAY
TCM
ELECTRONIC THROTTLE CONTROL RELAY
FUEL PUMP ASSY (FUEL PUMP)
FUEL PUMP CU
RADIATOR FAN CU
MAIN FAN RELAY
CAN COMMUNICATION
PURGE CONTROL SOLENOID VALVE
FUEL INJECTOR No. 1
FUEL INJECTOR No. 2
FUEL INJECTOR No. 3
FUEL INJECTOR No. 4
FUEL INJECTOR No. 5
FUEL INJECTOR No. 6
EGR VALVE
INTAKE CAMSHAFT POSITION SENSOR LH
INTAKE CAMSHAFT POSITION SENSOR RH
EXHAUST CAMSHAFT POSITION SENSOR LH
EXHAUST CAMSHAFT POSITION SENSOR RH
DRAIN VALVE
MASS AIR FLOW & INTAKE AIR TEMPERATURE SENSOR
FRONT OXYGEN (A/F) SENSOR LH
FRONT OXYGEN (A/F) SENSOR RH
REAR OXYGEN SENSOR LH
REAR OXYGEN SENSOR RH
STOP LIGHT & BRAKE SWITCH
CRUISE CONTROL SWITCH
J/C
C2
C30
C16
B26
C35
C33
B10
B11
B12
C17
C28
B7
B17
B13
C1
D7
D6
A10
A11
A12
A13
A23
A24
A20
A30
A9
A8
D16
D24
D30
D29
D23
B4
C11
C31
C22
C10
B1
B2
B20
B8
C18
C19
C5
C6
B5
B28
C20
B6
C9
C3
C15
C12
C13
WI-25509

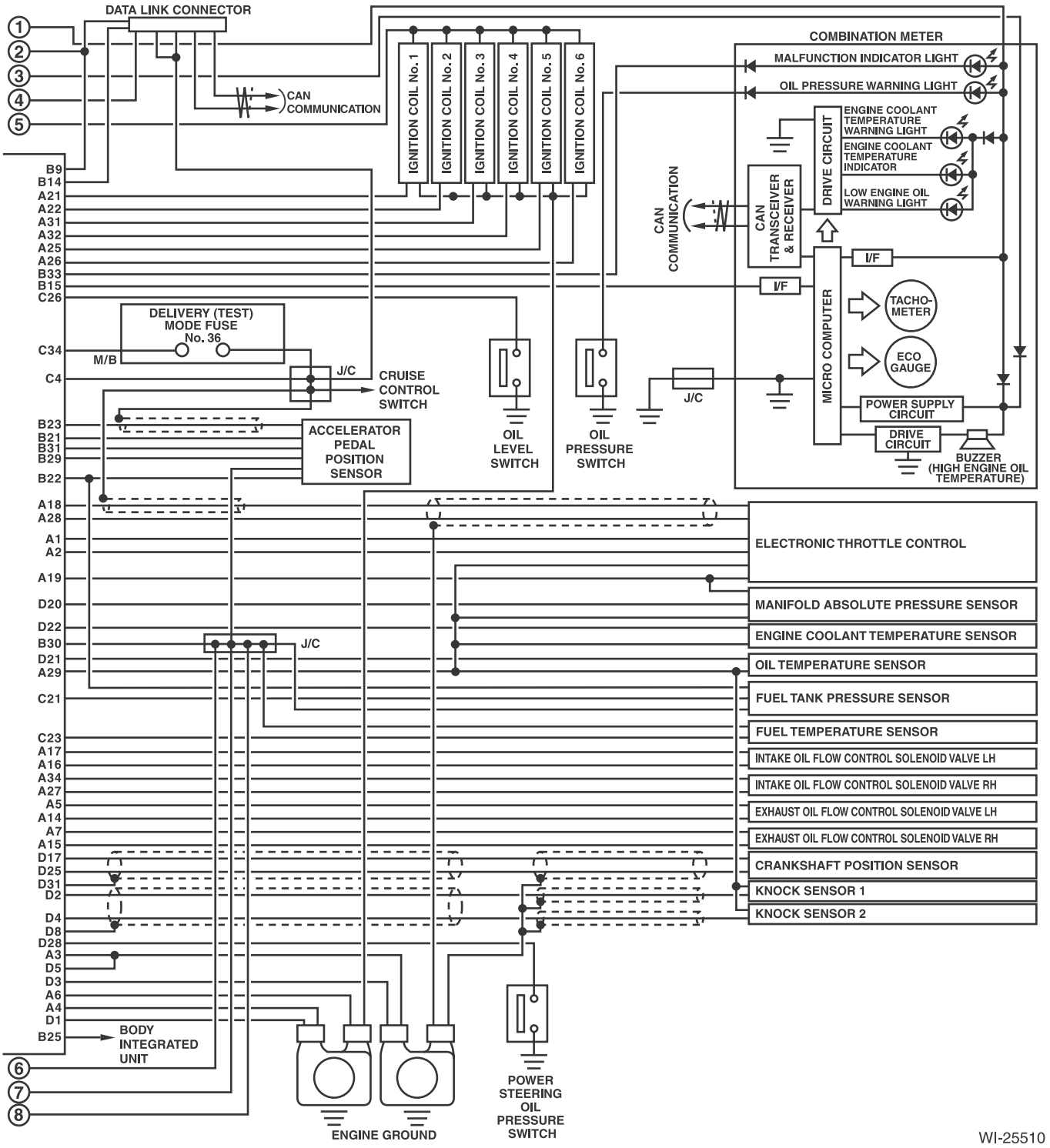
DATA LINK CONNECTOR
CAN COMMUNICATION
IGNITION COIL No. 1
IGNITION COIL No. 2
IGNITION COIL No. 3
IGNITION COIL No. 4
IGNITION COIL No. 5
IGNITION COIL No. 6
COMBINATION METER
MALFUNCTION INDICATOR LIGHT
OIL PRESSURE WARNING LIGHT
ENGINE COOLANT TEMPERATURE WARNING LIGHT
ENGINE COOLANT TEMPERATURE INDICATOR
LOW ENGINE OIL WARNING LIGHT
DRIVE CIRCUIT
CAN TRANSCEIVER & RECEIVER
CAN COMMUNICATION
I/F
MICRO COMPUTER
TACHO-METER
ECO GAUGE
POWER SUPPLY CIRCUIT
BUZZER (HIGH ENGINE OIL TEMPERATURE)
B9
B14
A21
A22
A31
A32
A25
A26
B33
B15
C26
DELIVERY (TEST) MODE FUSE No. 36
M/B
C34
C4
J/C
CRUISE CONTROL SWITCH
B23
B21
B31
B29
ACCELERATOR PEDAL POSITION SENSOR
B22
OIL LEVEL SWITCH
OIL PRESSURE SWITCH
A18
A28
A1
A2
A19
D20
D22
B30
D21
A29
C21
C23
A17
A16
A34
A27
A5
A14
A7
A15
D17
D25
D31
D2
D4
D8
D28
A3
D5
D3
A6
A4
D1
B25
BODY INTEGRATED UNIT
ELECTRONIC THROTTLE CONTROL
MANIFOLD ABSOLUTE PRESSURE SENSOR
ENGINE COOLANT TEMPERATURE SENSOR
OIL TEMPERATURE SENSOR
FUEL TANK PRESSURE SENSOR
FUEL TEMPERATURE SENSOR
INTAKE OIL FLOW CONTROL SOLENOID VALVE LH
INTAKE OIL FLOW CONTROL SOLENOID VALVE RH
EXHAUST OIL FLOW CONTROL SOLENOID VALVE LH
EXHAUST OIL FLOW CONTROL SOLENOID VALVE RH
CRANKSHAFT POSITION SENSOR
KNOCK SENSOR 1
KNOCK SENSOR 2
ENGINE GROUND
POWER STEERING OIL PRESSURE SWITCH
WI-25510

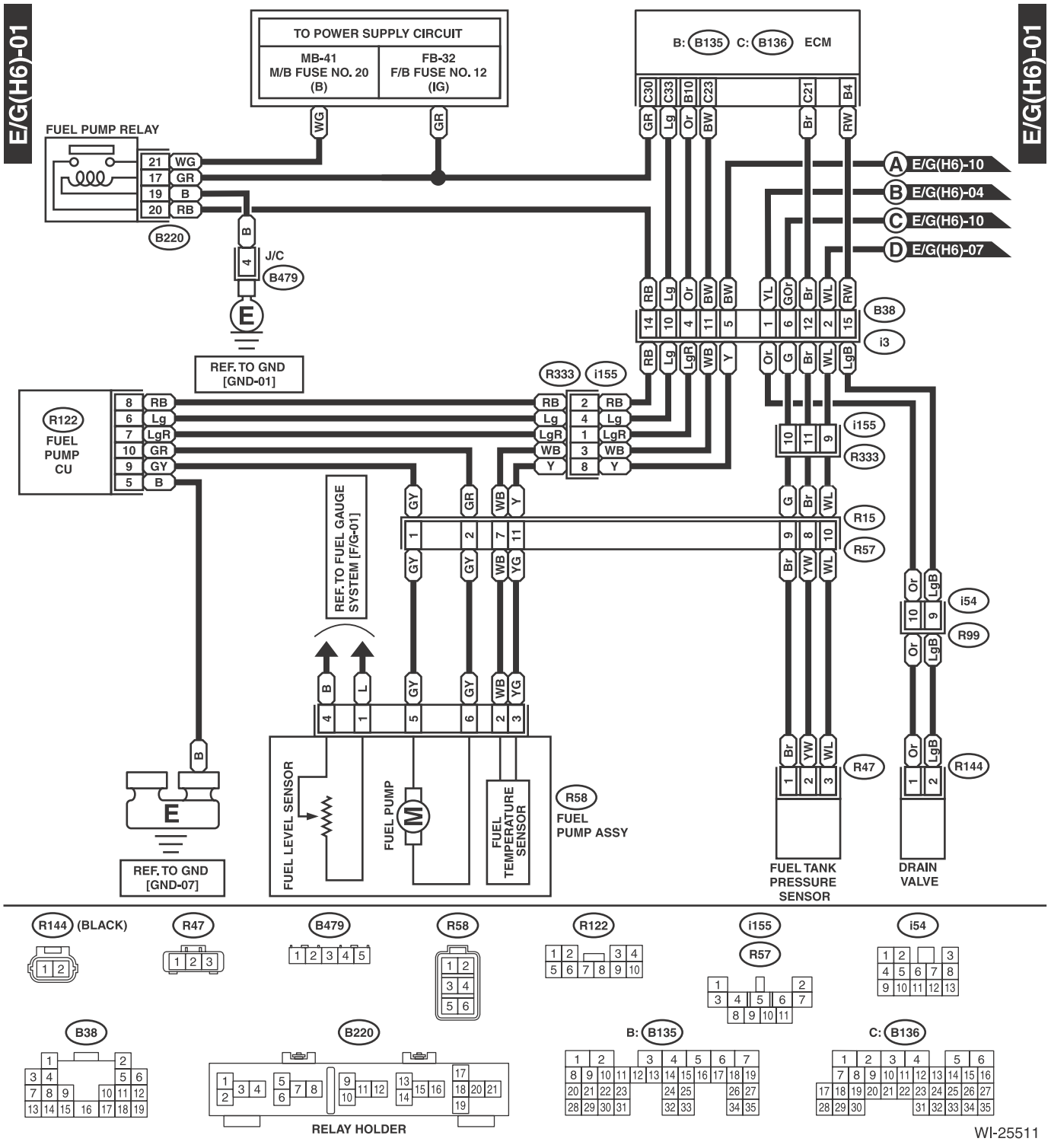
E/G(H6)-01
E/G(H6)-01
TO POWER SUPPLY CIRCUIT
MB-41
M/B FUSE NO. 20
(B)
FB-32
F/B FUSE NO. 12
(IG)
B: B135 C: B136 ECM
FUEL PUMP RELAY
B220
J/C
B479
REF. TO GND
[GND-01]
R122
FUEL
PUMP
CU
R333
i155
REF. TO FUEL GAUGE
SYSTEM [F/G-01]
R15
R57
i54
R99
R58
FUEL
PUMP ASSY
FUEL LEVEL SENSOR
FUEL PUMP
FUEL
TEMPERATURE
SENSOR
REF. TO GND
[GND-07]
FUEL TANK
PRESSURE
SENSOR
DRAIN
VALVE
R47
R144
B38
i3
A E/G(H6)-10
B E/G(H6)-04
C E/G(H6)-10
D E/G(H6)-07
R144 (BLACK)
R47
B479
R58
R122
i155
R57
i54
B38
B220
B: B135
C: B136
RELAY HOLDER
WI-25511

E/G(H6)-02

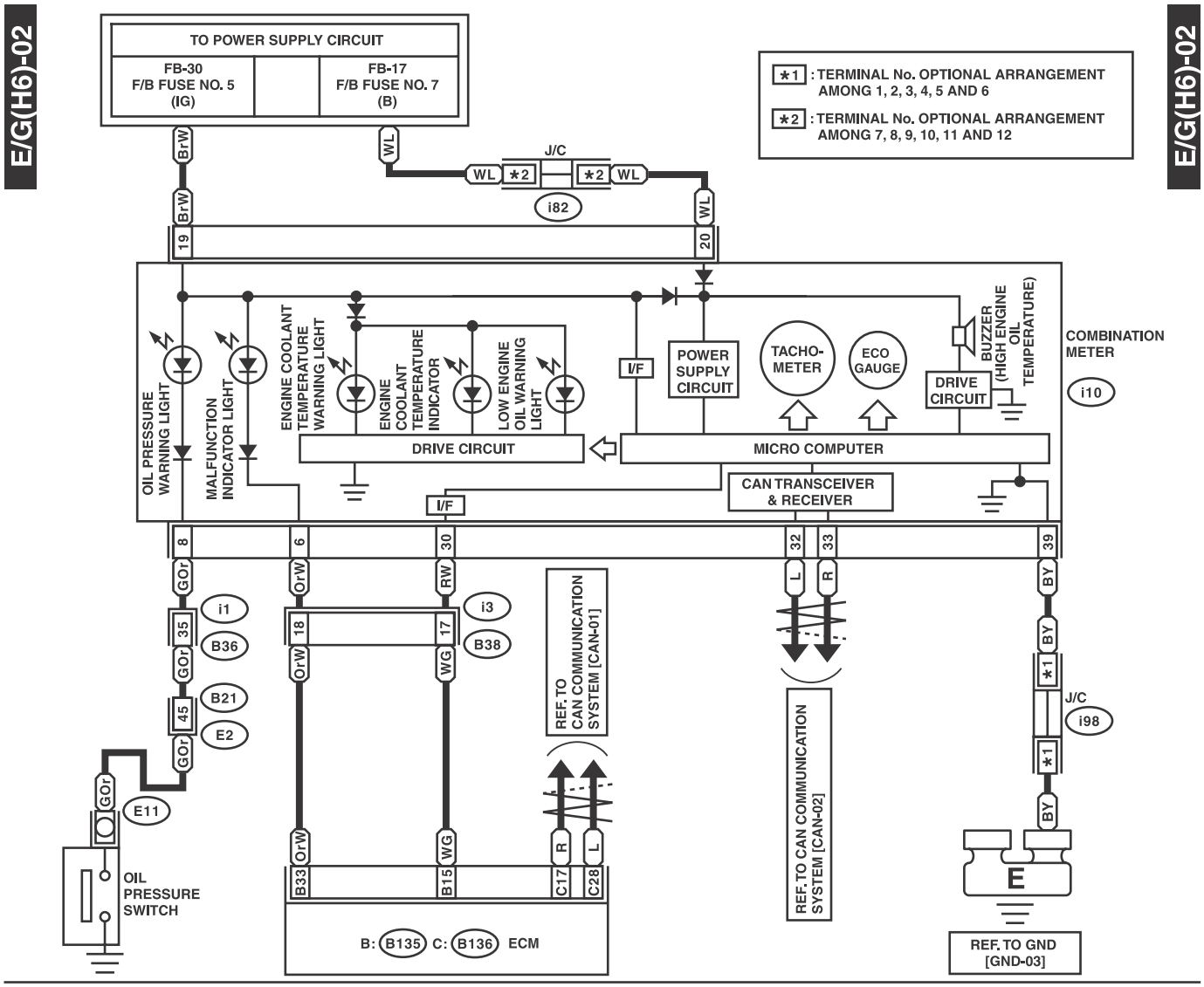

WI-25512

E/G(H6)-03

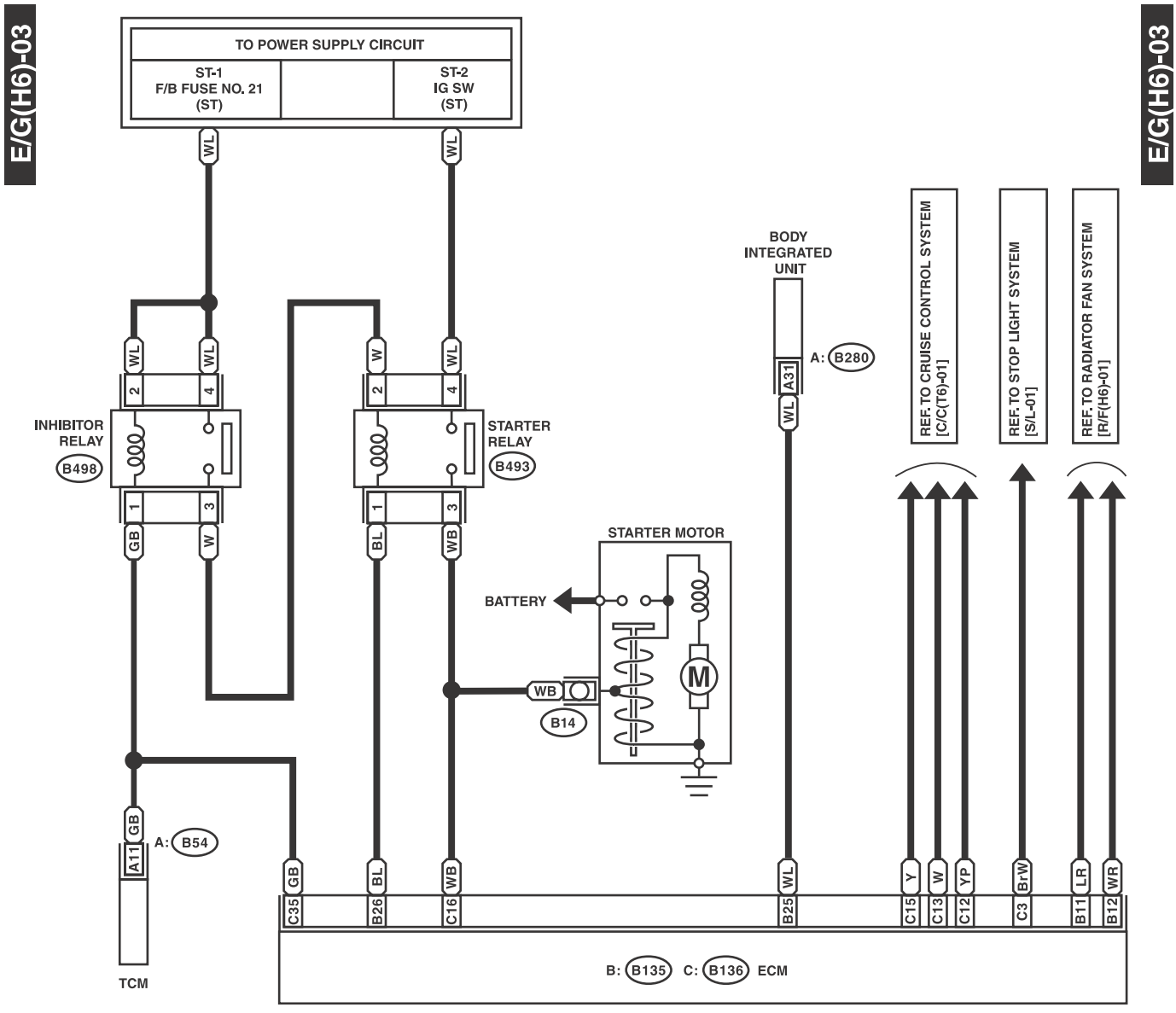

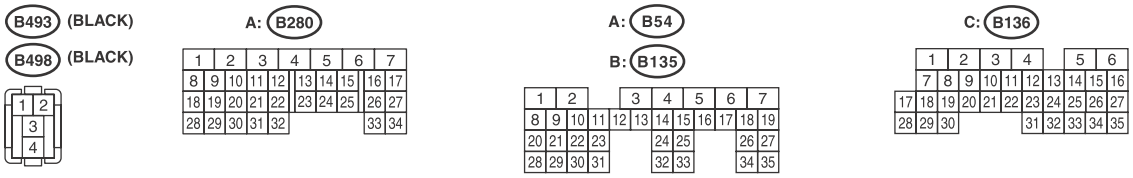

WI-25513

E/G(H6)-04

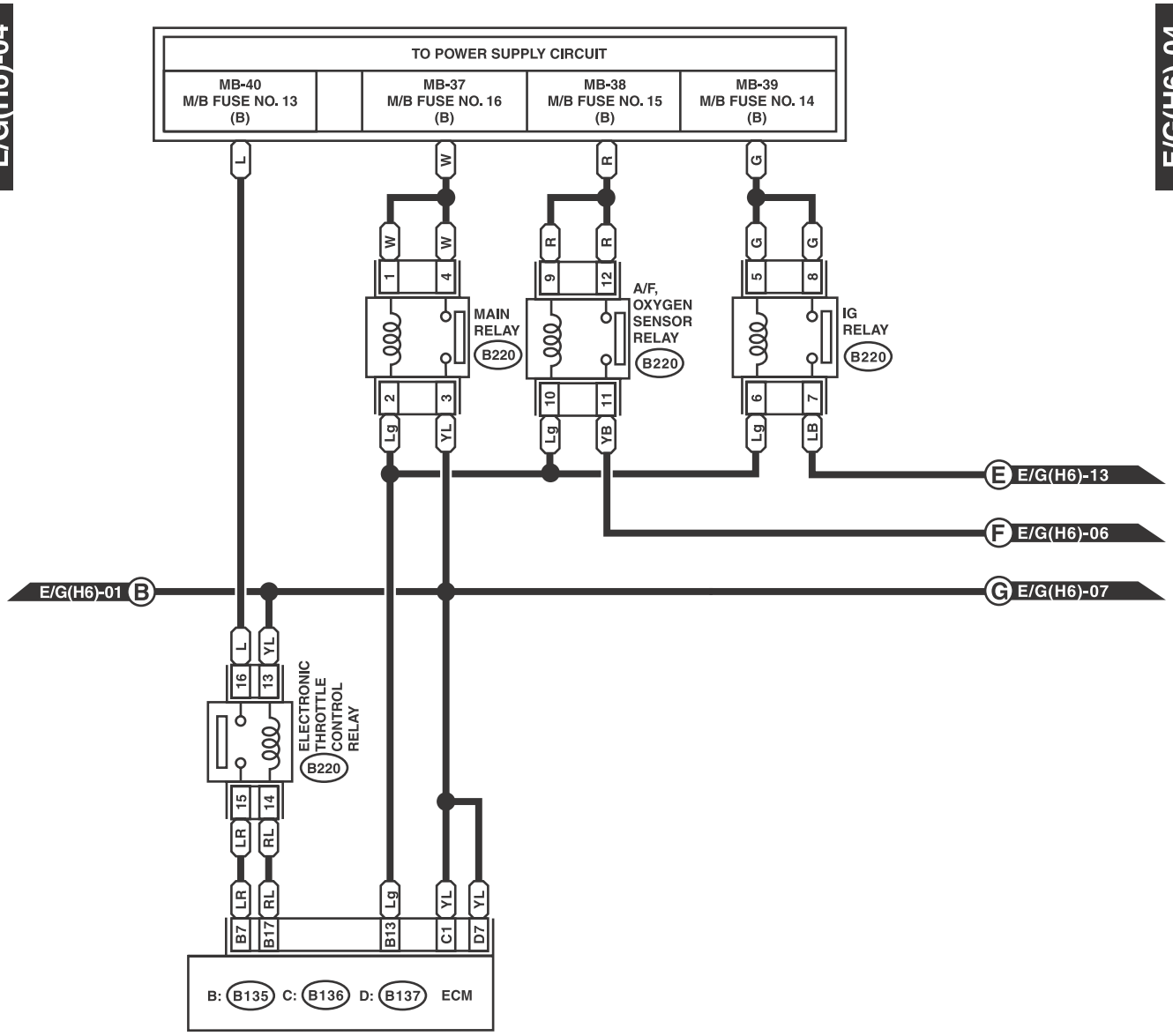

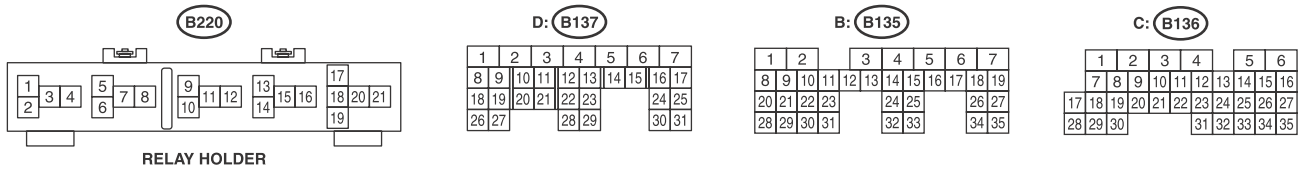

WI-25514

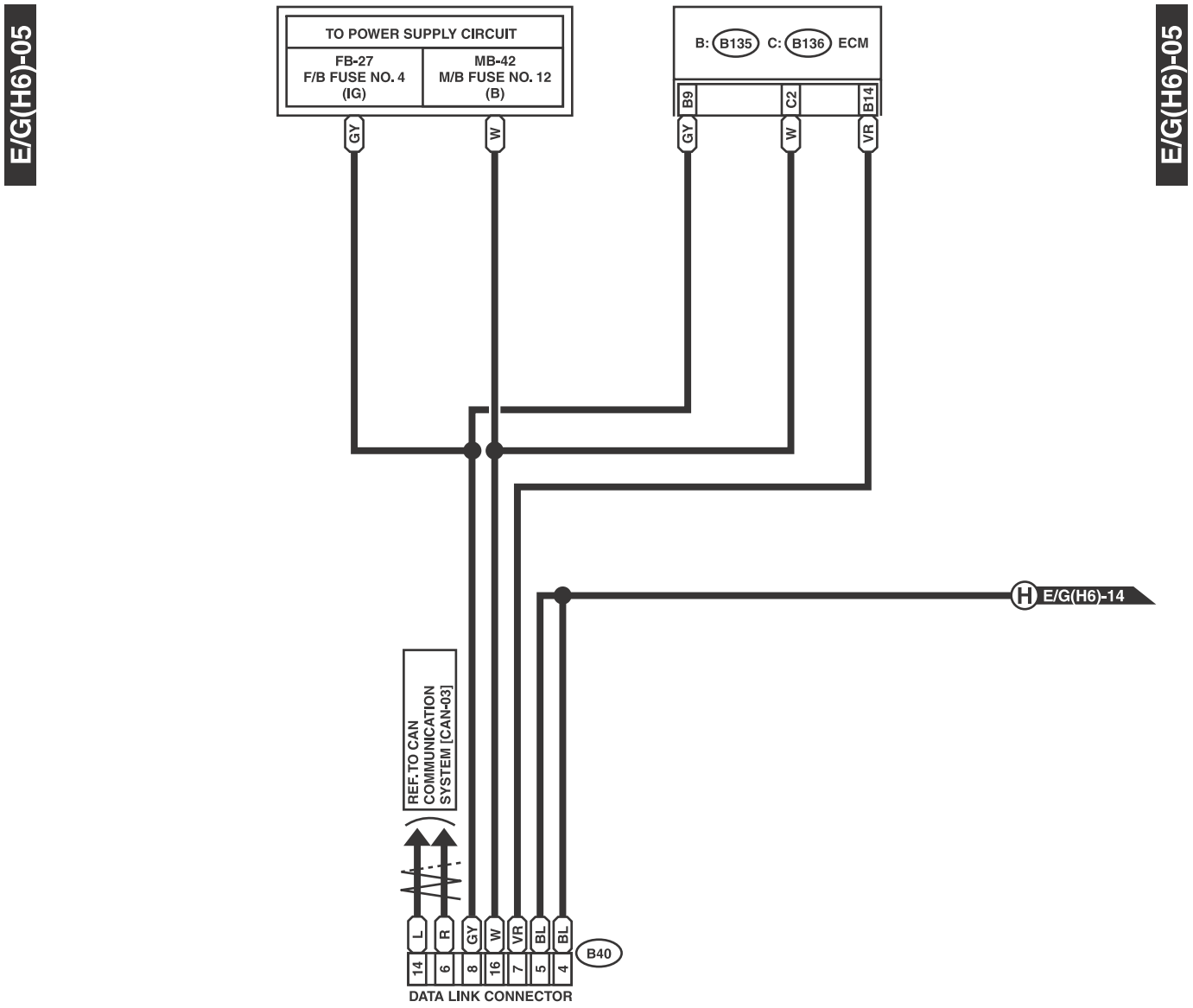
E/G(H6)-05
E/G(H6)-05
TO POWER SUPPLY CIRCUIT
FB-27
F/B FUSE NO. 4
(IG)
MB-42
M/B FUSE NO. 12
(B)
B: B135 C: B136 ECM
B9
C2
B14
GY
W
GY
W
VR
H E/G(H6)-14
REF.TO CAN COMMUNICATION SYSTEM [CAN-03]
L
R
GY
W
VR
BL
BL
B40
14
6
8
16
7
5
4
DATA LINK CONNECTOR

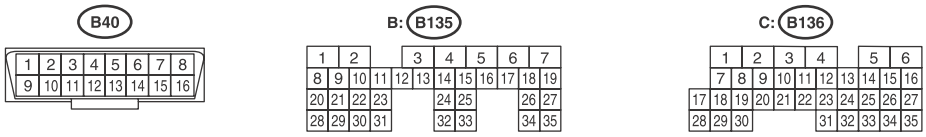
B40
1 2 3 4 5 6 7 8
9 10 11 12 13 14 15 16
B: B135
1 2 3 4 5 6 7
8 9 10 11 12 13 14 15 16 17 18 19
20 21 22 23 24 25 26 27
28 29 30 31 32 33 34 35
C: B136
1 2 3 4 5 6
7 8 9 10 11 12 13 14 15 16
17 18 19 20 21 22 23 24 25 26 27
28 29 30 31 32 33 34 35

WI-25515

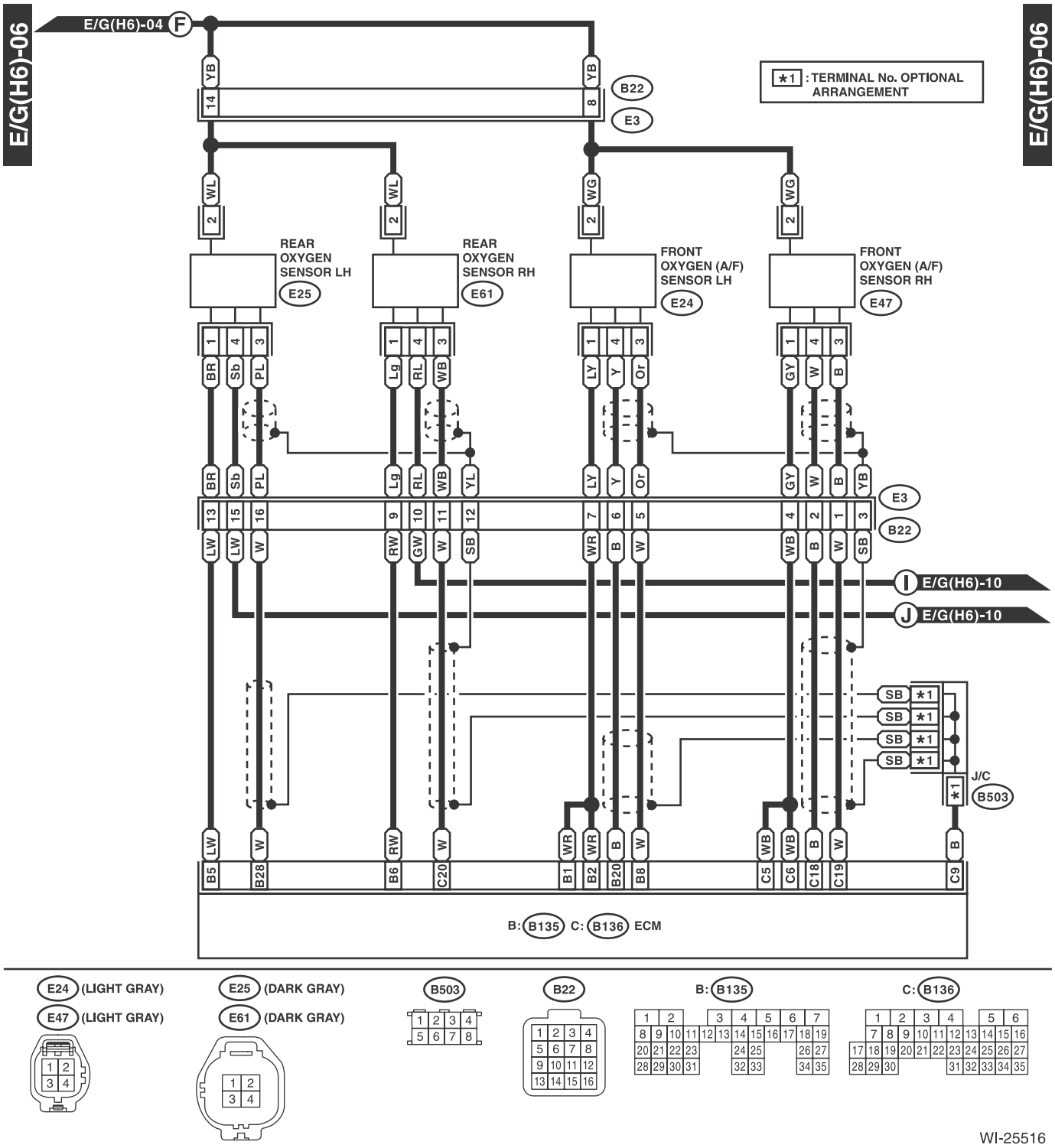
E/G(H6)-06
E/G(H6)-04
F
*1 : TERMINAL No. OPTIONAL ARRANGEMENT
B22
E3
REAR OXYGEN SENSOR LH
E25
REAR OXYGEN SENSOR RH
E61
FRONT OXYGEN (A/F) SENSOR LH
E24
FRONT OXYGEN (A/F) SENSOR RH
E47
I E/G(H6)-10
J E/G(H6)-10
SB *1
J/C
B503
B: B135 C: B136 ECM
E24 (LIGHT GRAY)
E47 (LIGHT GRAY)
E25 (DARK GRAY)
E61 (DARK GRAY)
B503
B22
B: B135
C: B136
WI-25516

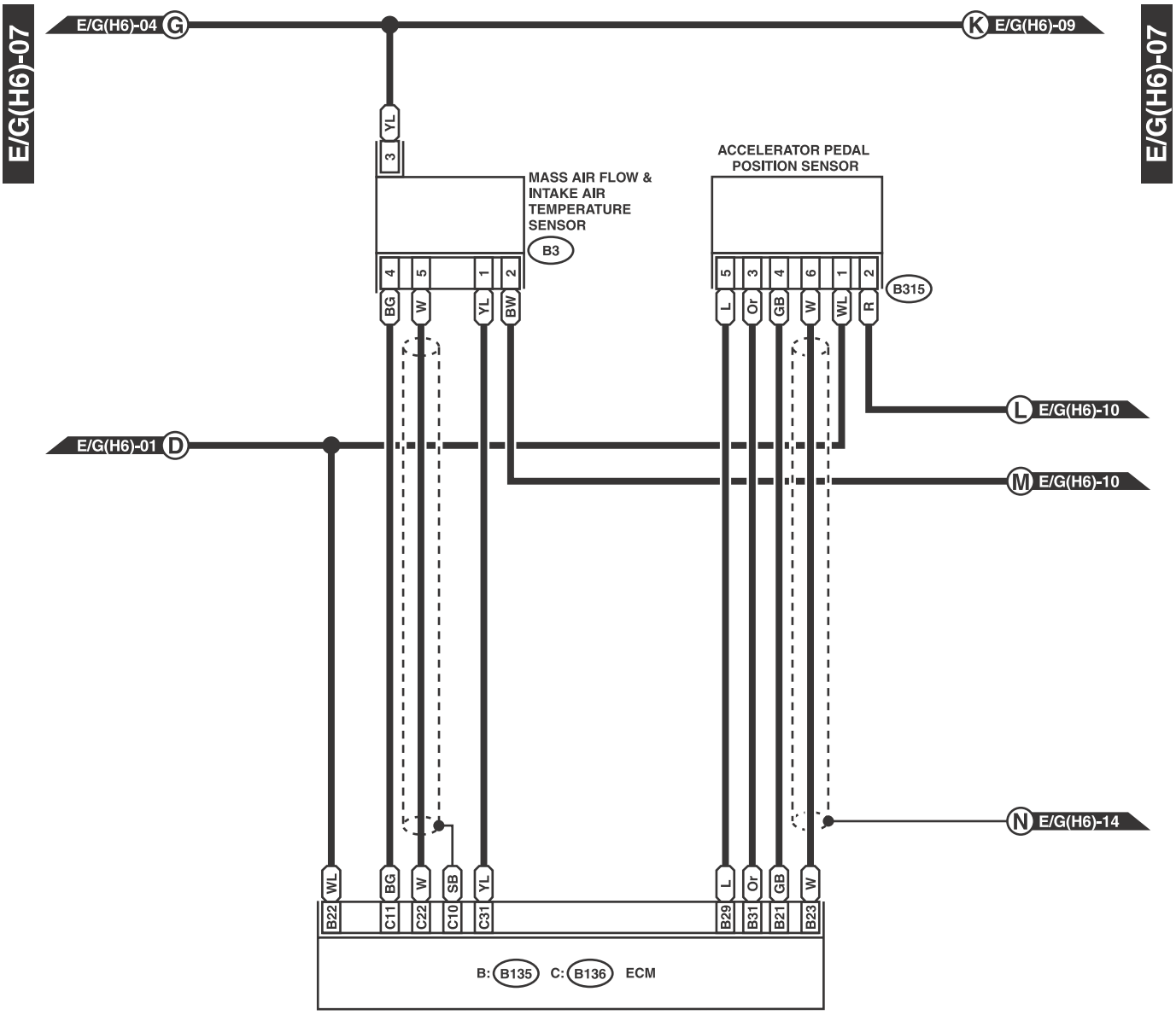
E/G(H6)-07
E/G(H6)-04 G
K E/G(H6)-09
E/G(H6)-07
3 YL
MASS AIR FLOW & INTAKE AIR TEMPERATURE SENSOR
B3
4 5 1 2
BG W YL BW
ACCELERATOR PEDAL POSITION SENSOR
5 3 4 6 1 2
B315
L Or GB W WL R
L E/G(H6)-10
E/G(H6)-01 D
M E/G(H6)-10
N E/G(H6)-14
WL BG W SB YL
B22 C11 C22 C10 C31
L Or GB W
B29 B31 B21 B23
B: B135 C: B136 ECM

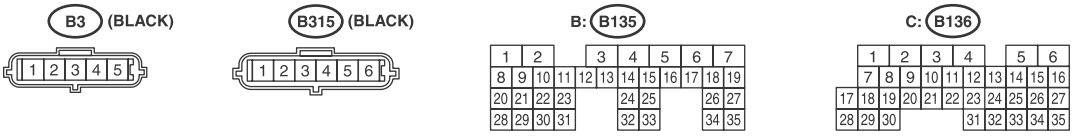
B3 (BLACK)
1 2 3 4 5
B315 (BLACK)
1 2 3 4 5 6
B: B135
1 2 3 4 5 6 7
8 9 10 11 12 13 14 15 16 17 18 19
20 21 22 23 24 25 26 27
28 29 30 31 32 33 34 35
C: B136
1 2 3 4 5 6
7 8 9 10 11 12 13 14 15 16
17 18 19 20 21 22 23 24 25 26 27
28 29 30 31 32 33 34 35

WI-25517

E/G(H6)-08

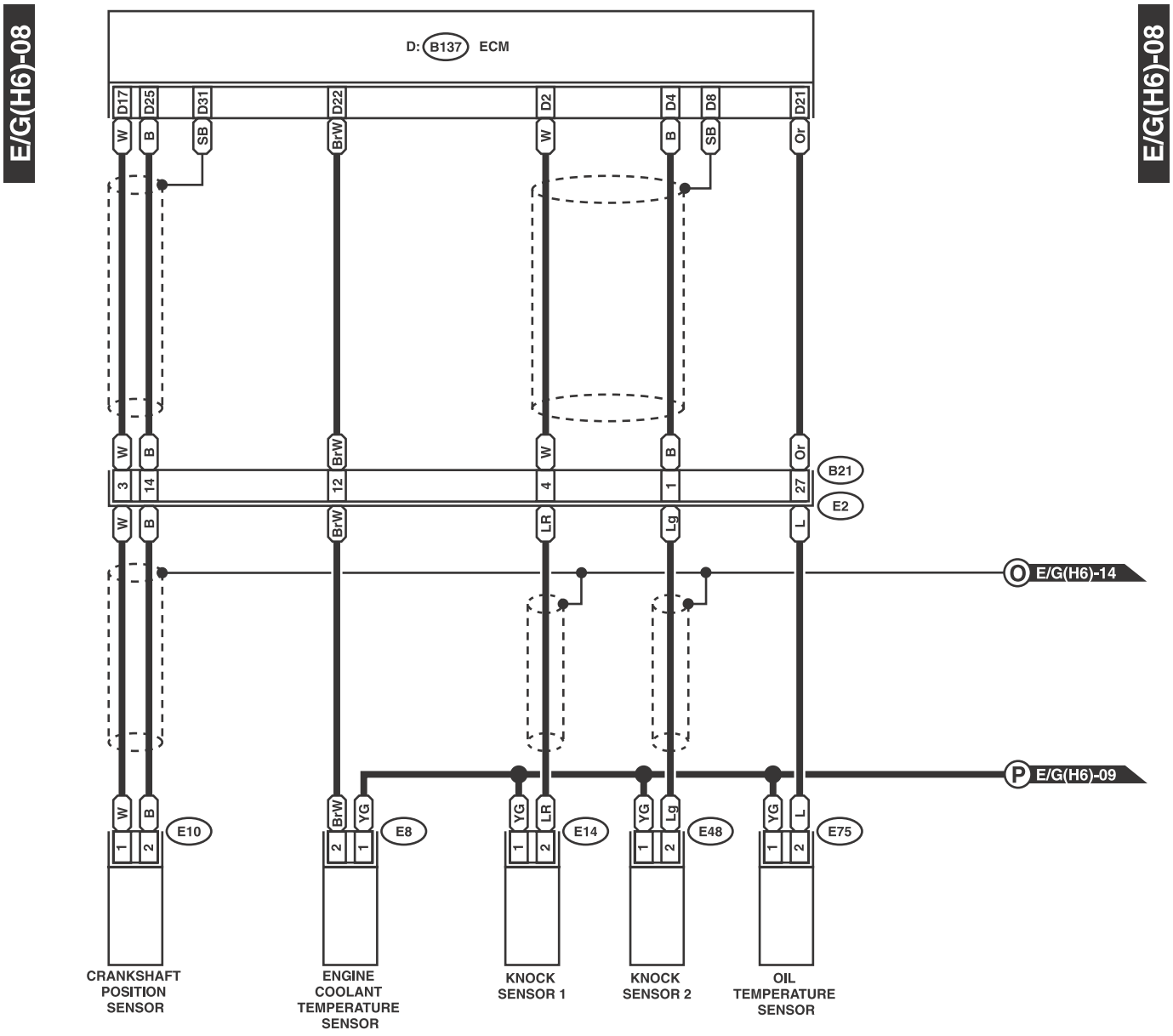

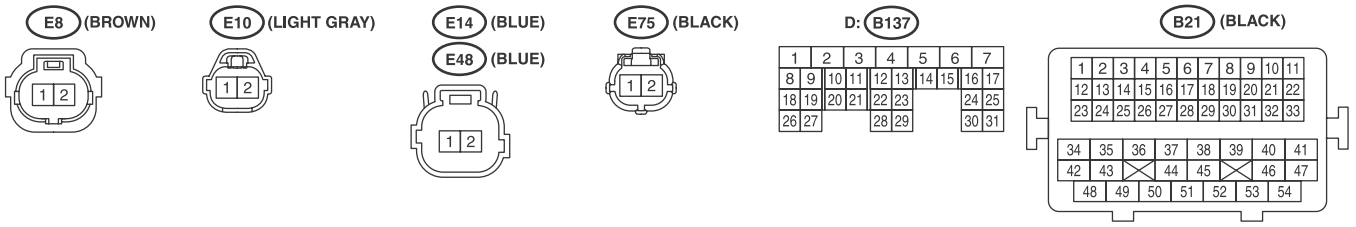

WI-25518

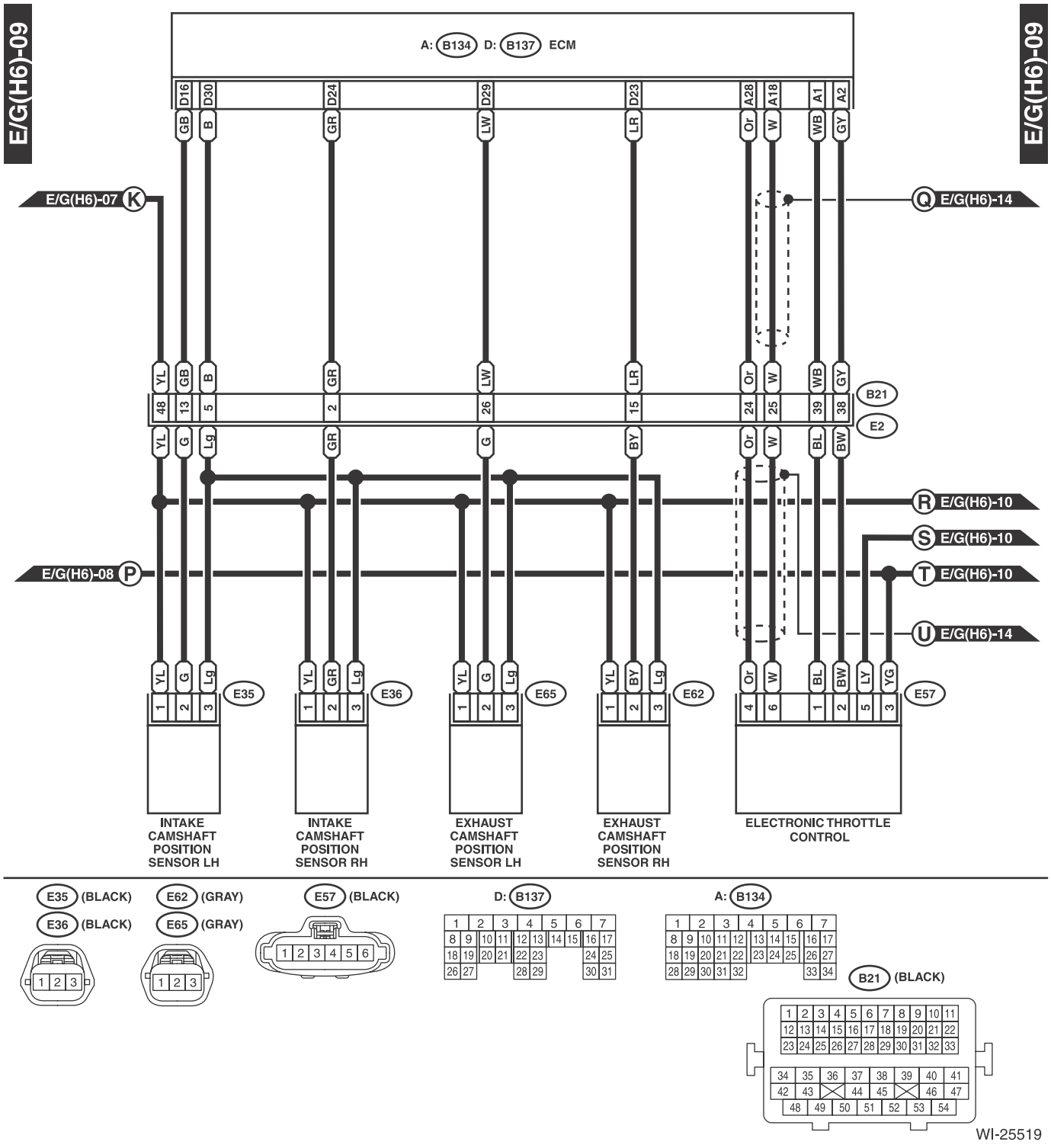
E/G(H6)-09
A: B134 D: B137 ECM
D16 D30 D24 D29 D23 A28 A18 A1 A2
GB B GR LW LR Or W WB GY
E/G(H6)-07 K
Q E/G(H6)-14
YL GB B GR LW LR Or W WB GY
48 13 5 2 26 15 24 25 39 38
B21
E2
YL G Lg GR G BY Or W BL BW
R E/G(H6)-10
S E/G(H6)-10
E/G(H6)-08 P
T E/G(H6)-10
U E/G(H6)-14
YL G Lg E35
YL GR Lg E36
YL G Lg E65
YL BY Lg E62
Or W BL BW LY YG E57
1 2 3
4 6 1 2 5 3
INTAKE CAMSHAFT POSITION SENSOR LH
INTAKE CAMSHAFT POSITION SENSOR RH
EXHAUST CAMSHAFT POSITION SENSOR LH
EXHAUST CAMSHAFT POSITION SENSOR RH
ELECTRONIC THROTTLE CONTROL
E35 (BLACK)
E36 (BLACK)
E62 (GRAY)
E65 (GRAY)
E57 (BLACK)
D: B137
A: B134
B21 (BLACK)
WI-25519

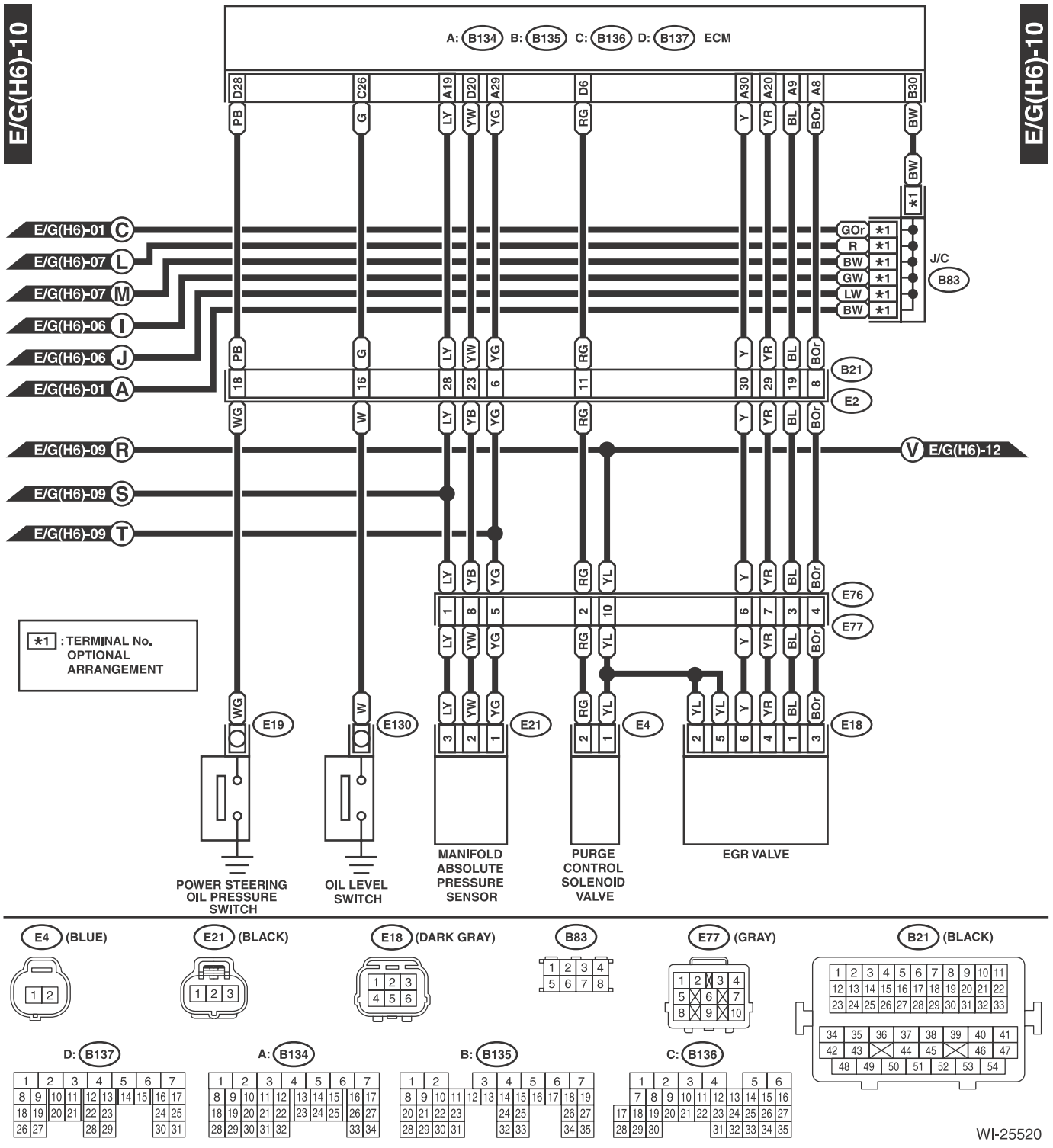
E/G(H6)-10
E/G(H6)-10
A: B134 B: B135 C: B136 D: B137 ECM
D28 C26 A19 D20 A29 D6 A30 A20 A9 A8 B30
PB G LY YW YG RG Y YR BL BOr BW
BW
*1
E/G(H6)-01 C
E/G(H6)-07 L
E/G(H6)-07 M
E/G(H6)-06 I
E/G(H6)-06 J
E/G(H6)-01 A
GOr *1
R *1
BW *1
GW *1
LW *1
BW *1
J/C
B83
B21
E2
18 16 28 23 6 11 30 29 19 8
WG W LY YB YG RG Y YR BL BOr
E/G(H6)-09 R
E/G(H6)-09 S
E/G(H6)-09 T
V E/G(H6)-12
E76
E77
1 8 5 2 10 6 7 3 4
*1 : TERMINAL No. OPTIONAL ARRANGEMENT
E19
E130
E21
E4
E18
3 2 1 2 1 2 5 6 4 1 3
POWER STEERING OIL PRESSURE SWITCH
OIL LEVEL SWITCH
MANIFOLD ABSOLUTE PRESSURE SENSOR
PURGE CONTROL SOLENOID VALVE
EGR VALVE

E4 (BLUE)
E21 (BLACK)
E18 (DARK GRAY)
B83
E77 (GRAY)
B21 (BLACK)
D: B137
A: B134
B: B135
C: B136
WI-25520

E/G(H6)-11

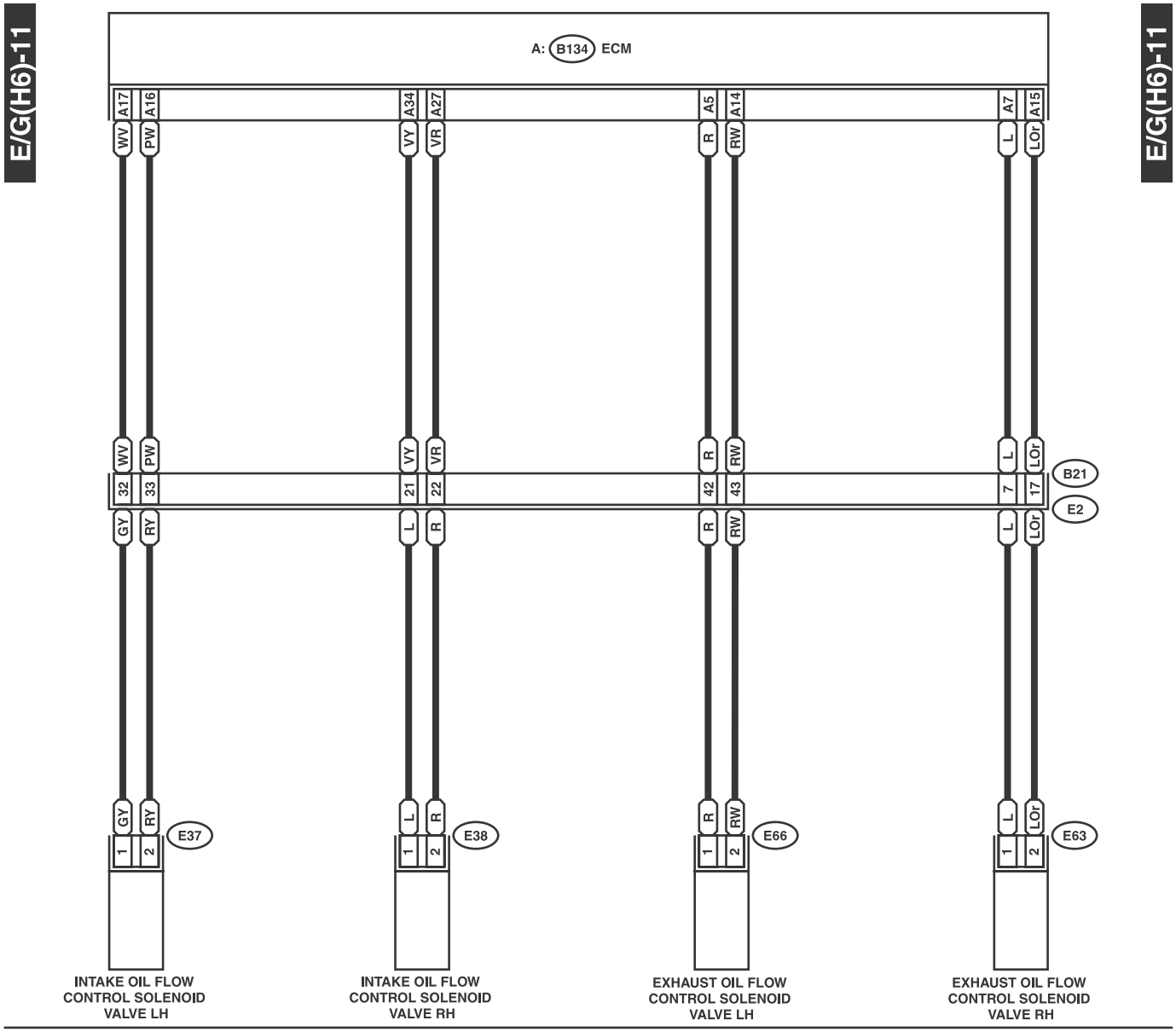

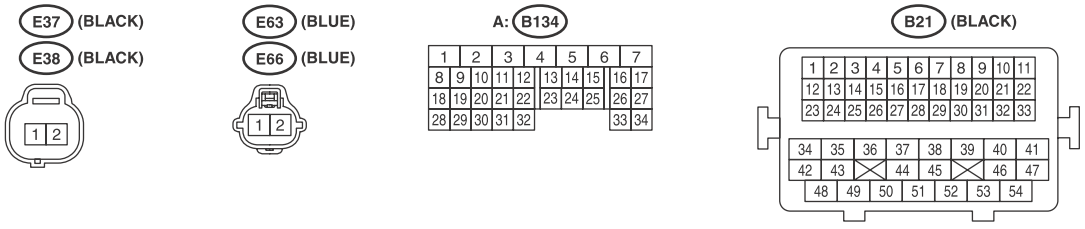

WI-25521

E/G(H6)-11

E/G(H6)-12

E/G(H6)-12

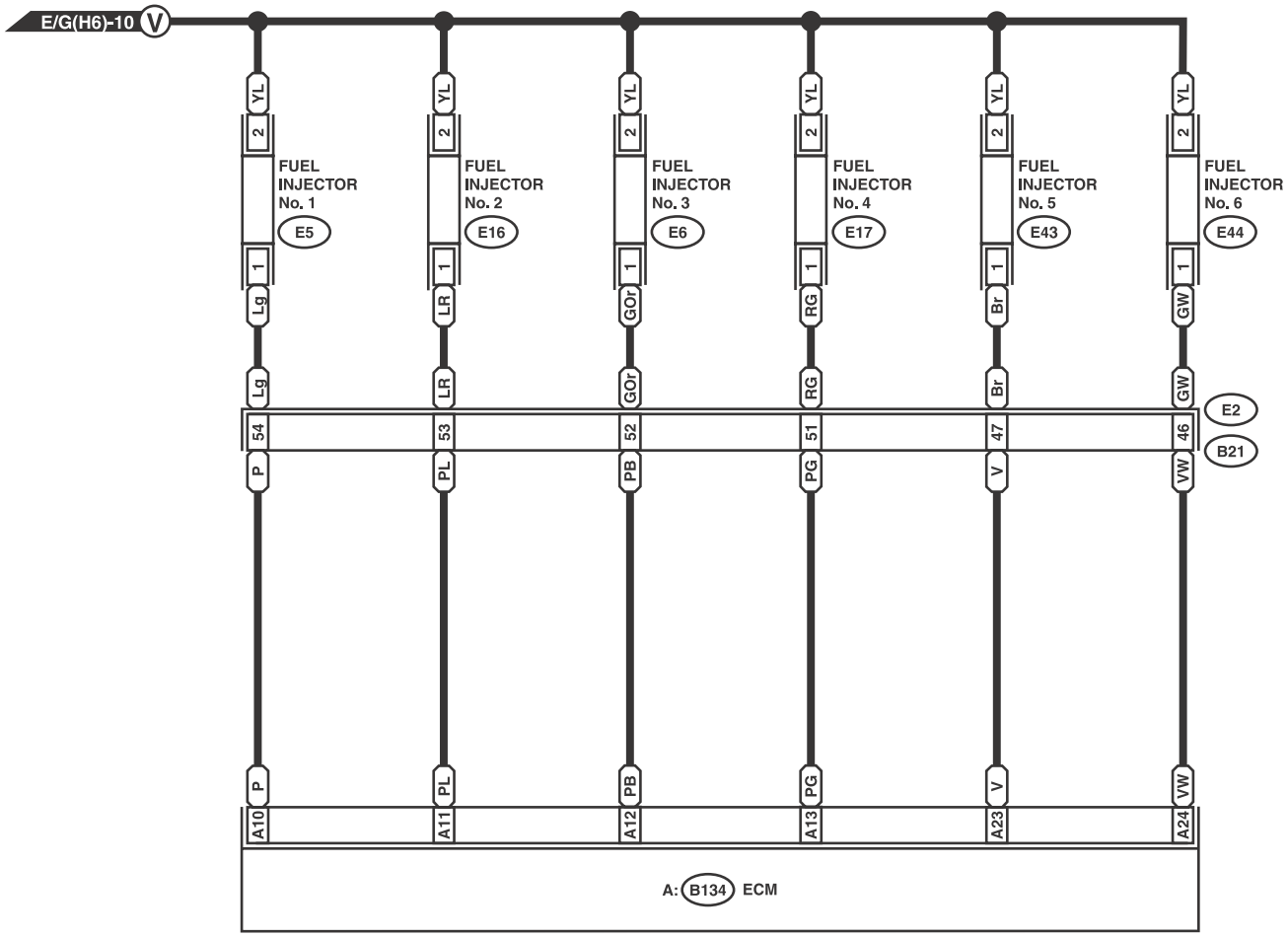

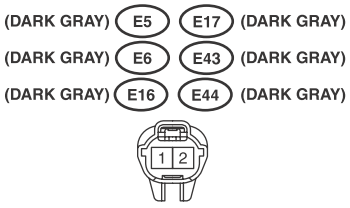

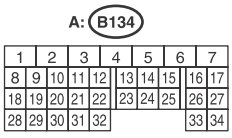

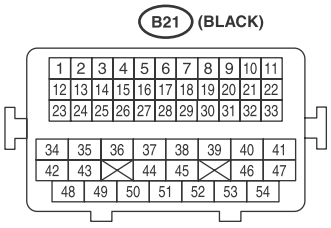

WI-25522

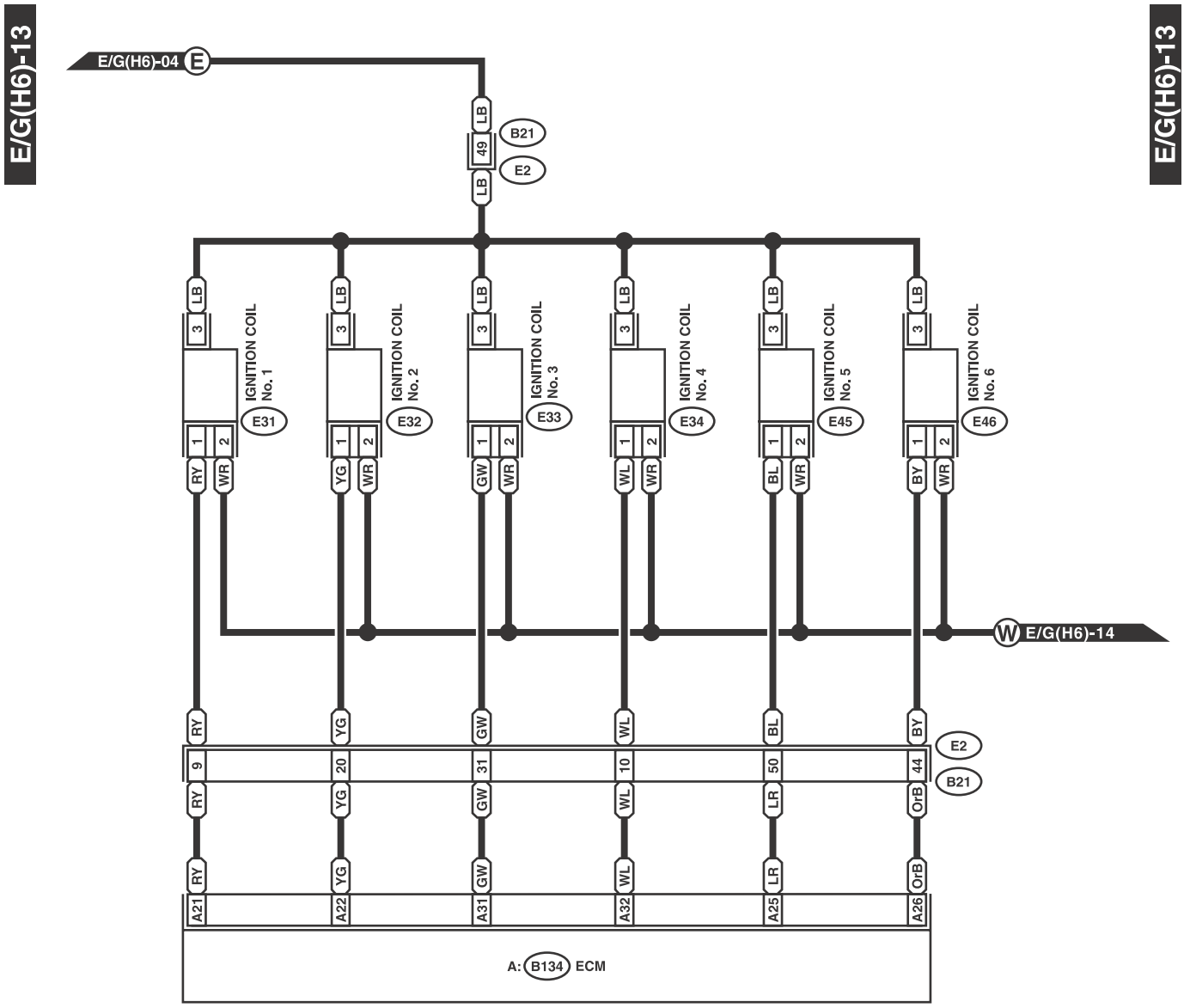
E/G(H6)-13
E/G(H6)-13
E/G(H6)-04 E
LB
49
B21
E2
LB
IGNITION COIL No. 1
IGNITION COIL No. 2
IGNITION COIL No. 3
IGNITION COIL No. 4
IGNITION COIL No. 5
IGNITION COIL No. 6
E31
E32
E33
E34
E45
E46
3
1
2
RY
WR
YG
GW
WL
BL
BY
W E/G(H6)-14
9
20
31
10
50
44
E2
B21
LR
OrB
A21
A22
A31
A32
A25
A26
A: B134 ECM

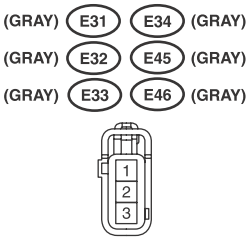
(GRAY) E31
E34 (GRAY)
(GRAY) E32
E45 (GRAY)
(GRAY) E33
E46 (GRAY)
1
2
3

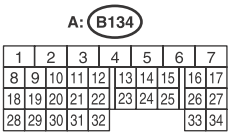
A: B134
1 2 3 4 5 6 7
8 9 10 11 12 13 14 15 16 17
18 19 20 21 22 23 24 25 26 27
28 29 30 31 32 33 34

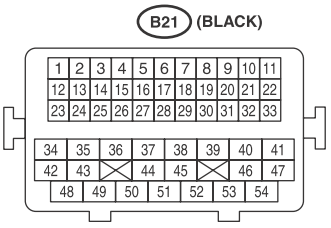
B21 (BLACK)
1 2 3 4 5 6 7 8 9 10 11
12 13 14 15 16 17 18 19 20 21 22
23 24 25 26 27 28 29 30 31 32 33
34 35 36 37 38 39 40 41
42 43 44 45 46 47
48 49 50 51 52 53 54

WI-25523

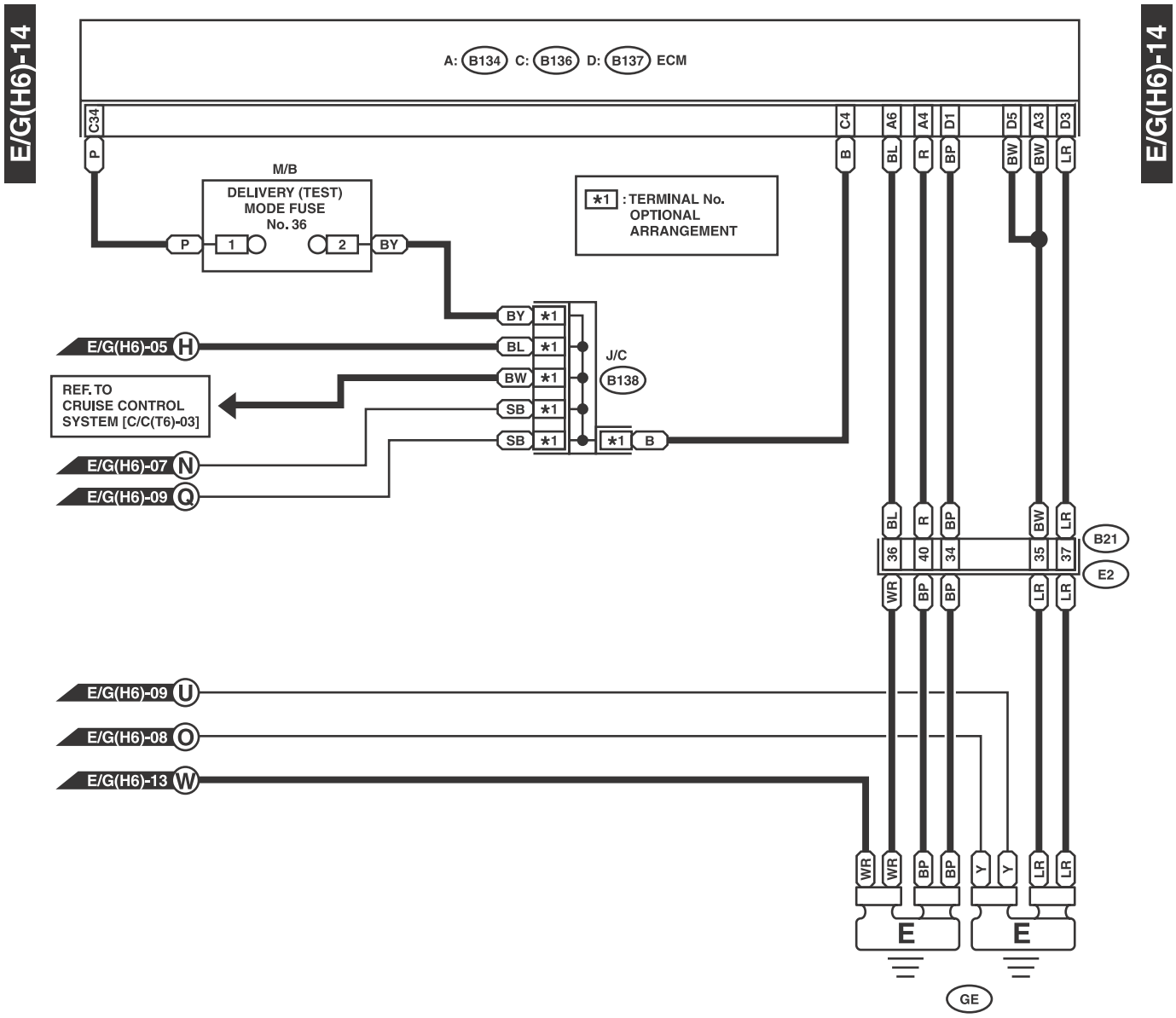
E/G(H6)-14
E/G(H6)-14
A: B134 C: B136 D: B137 ECM
C34
C4
A6
A4
D1
D5
A3
D3
P
B
BL
R
BP
BW
BW
LR
M/B
DELIVERY (TEST) MODE FUSE No. 36
P
1
2
BY
*1 : TERMINAL No. OPTIONAL ARRANGEMENT
BY *1
E/G(H6)-05 H
BL *1
J/C
B138
REF. TO CRUISE CONTROL SYSTEM [C/C(T6)-03]
BW *1
SB *1
SB *1
*1 B
E/G(H6)-07 N
E/G(H6)-09 Q
BL
R
BP
BW
LR
B21
36
40
34
35
37
E2
WR
BP
BP
LR
LR
E/G(H6)-09 U
E/G(H6)-08 O
E/G(H6)-13 W
WR
WR
BP
BP
Y
Y
LR
LR
E
E
GE

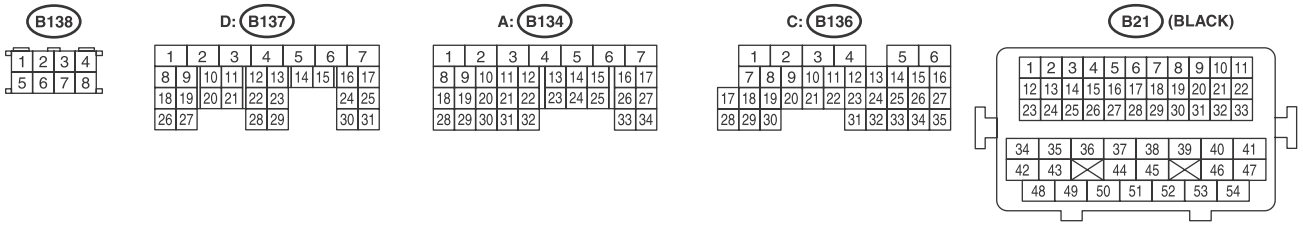
B138
D: B137
A: B134
C: B136
B21 (BLACK)

WI-25524

20.Front Accessory Power Supply Socket System

A: WIRING DIAGRAM

FAPS-01

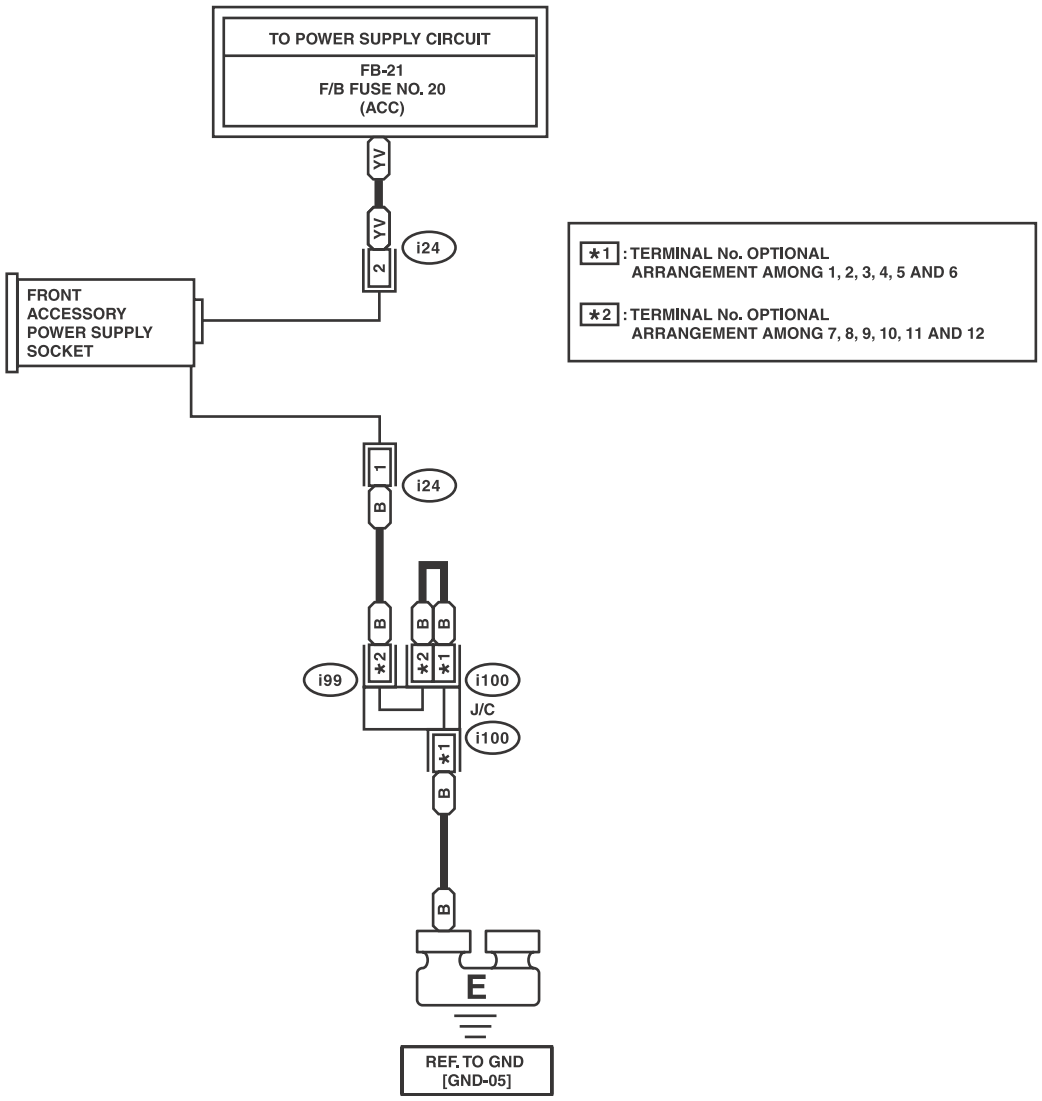

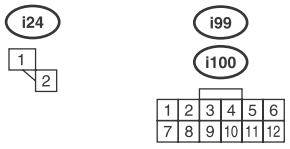

WI-25525

21.Front Fog Light System

A: WIRING DIAGRAM

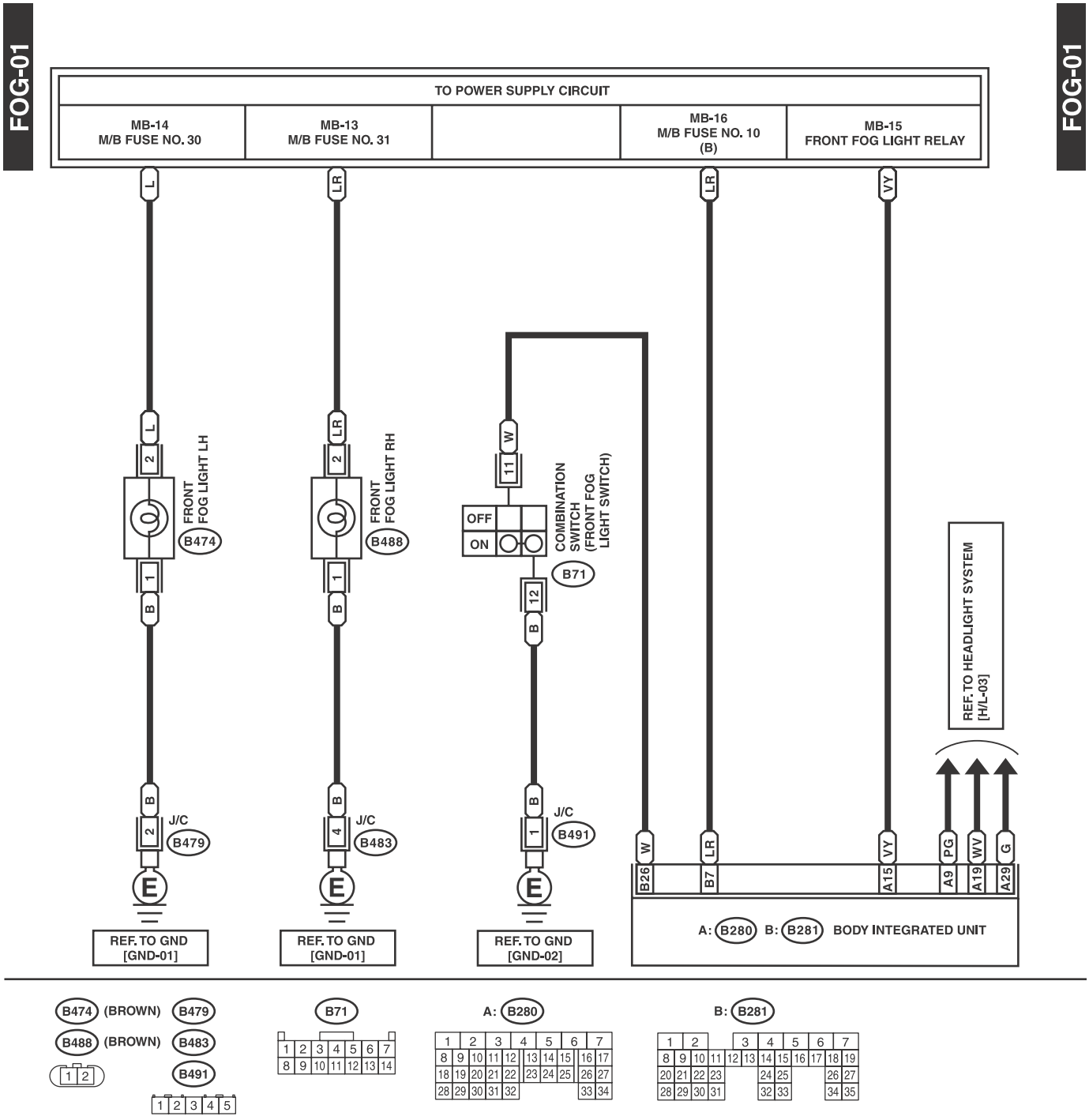

WI-25526

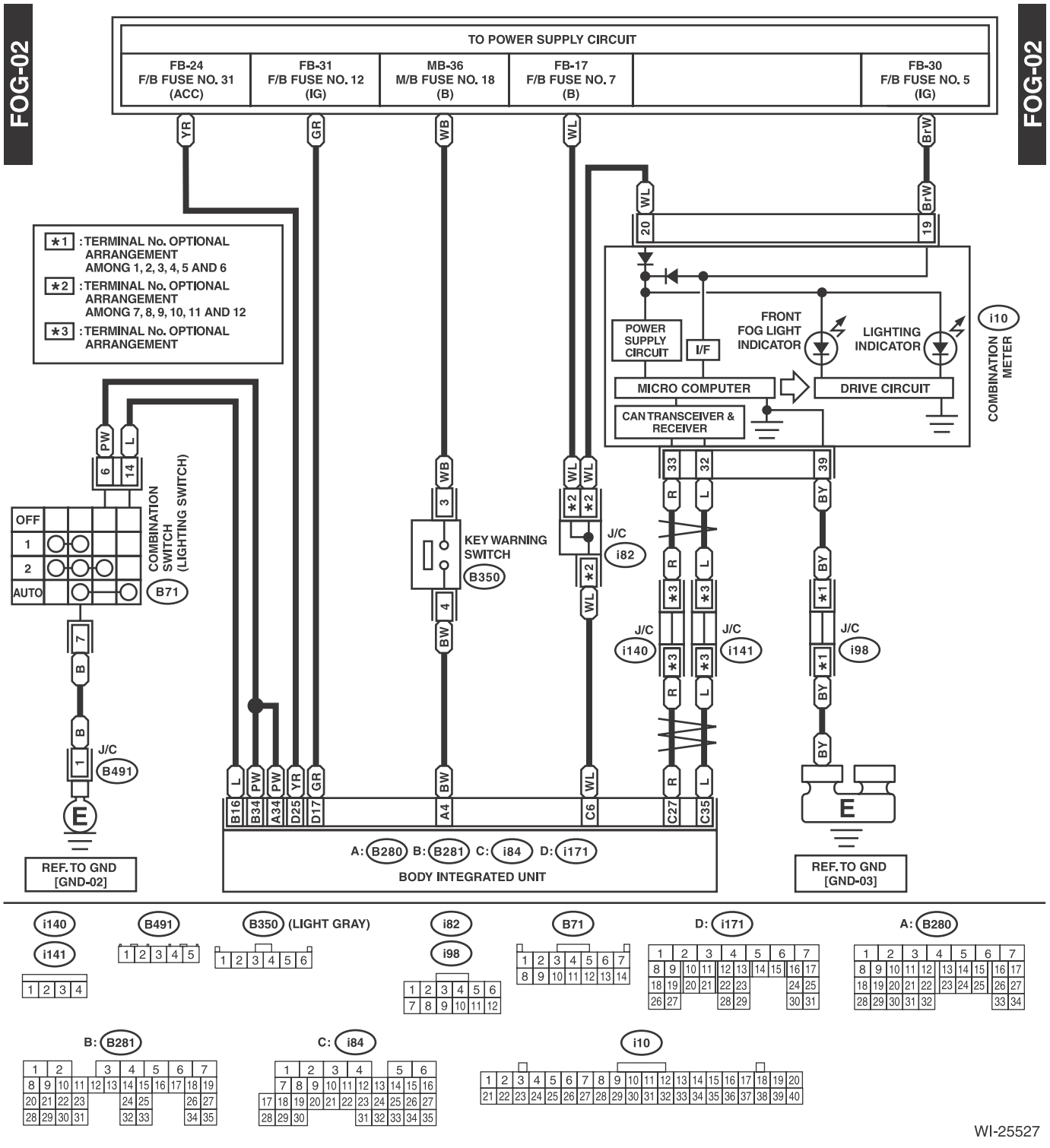
FOG-02
FOG-02
TO POWER SUPPLY CIRCUIT
FB-24 F/B FUSE NO. 31 (ACC)
FB-31 F/B FUSE NO. 12 (IG)
MB-36 M/B FUSE NO. 18 (B)
FB-17 F/B FUSE NO. 7 (B)
FB-30 F/B FUSE NO. 5 (IG)
*1 : TERMINAL No. OPTIONAL ARRANGEMENT AMONG 1, 2, 3, 4, 5 AND 6
*2 : TERMINAL No. OPTIONAL ARRANGEMENT AMONG 7, 8, 9, 10, 11 AND 12
*3 : TERMINAL No. OPTIONAL ARRANGEMENT
POWER SUPPLY CIRCUIT
I/F
FRONT FOG LIGHT INDICATOR
LIGHTING INDICATOR
MICRO COMPUTER
DRIVE CIRCUIT
CAN TRANSCEIVER & RECEIVER
i10
COMBINATION METER
COMBINATION SWITCH (LIGHTING SWITCH)
OFF
1
2
AUTO
B71
KEY WARNING SWITCH
B350
J/C
i82
i140
i141
i98
B491
REF. TO GND [GND-02]
REF. TO GND [GND-03]
A: B280 B: B281 C: i84 D: i171
BODY INTEGRATED UNIT

i140
i141
B491
B350 (LIGHT GRAY)
i82
i98
B71
D: i171
A: B280
B: B281
C: i84
i10

WI-25527

22.Front Wiper and Washer System

A: WIRING DIAGRAM

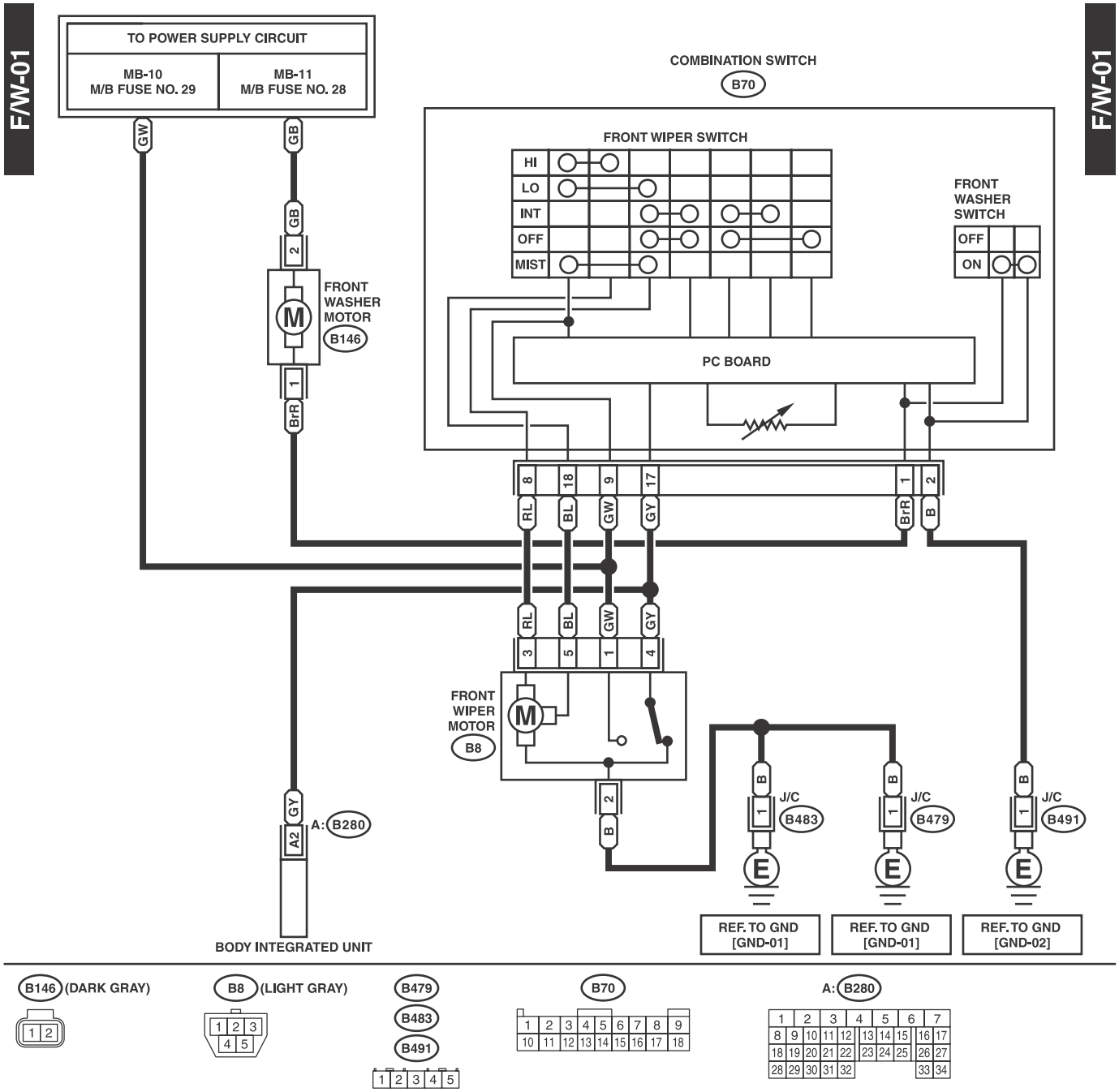

WI-25528

F/W-02

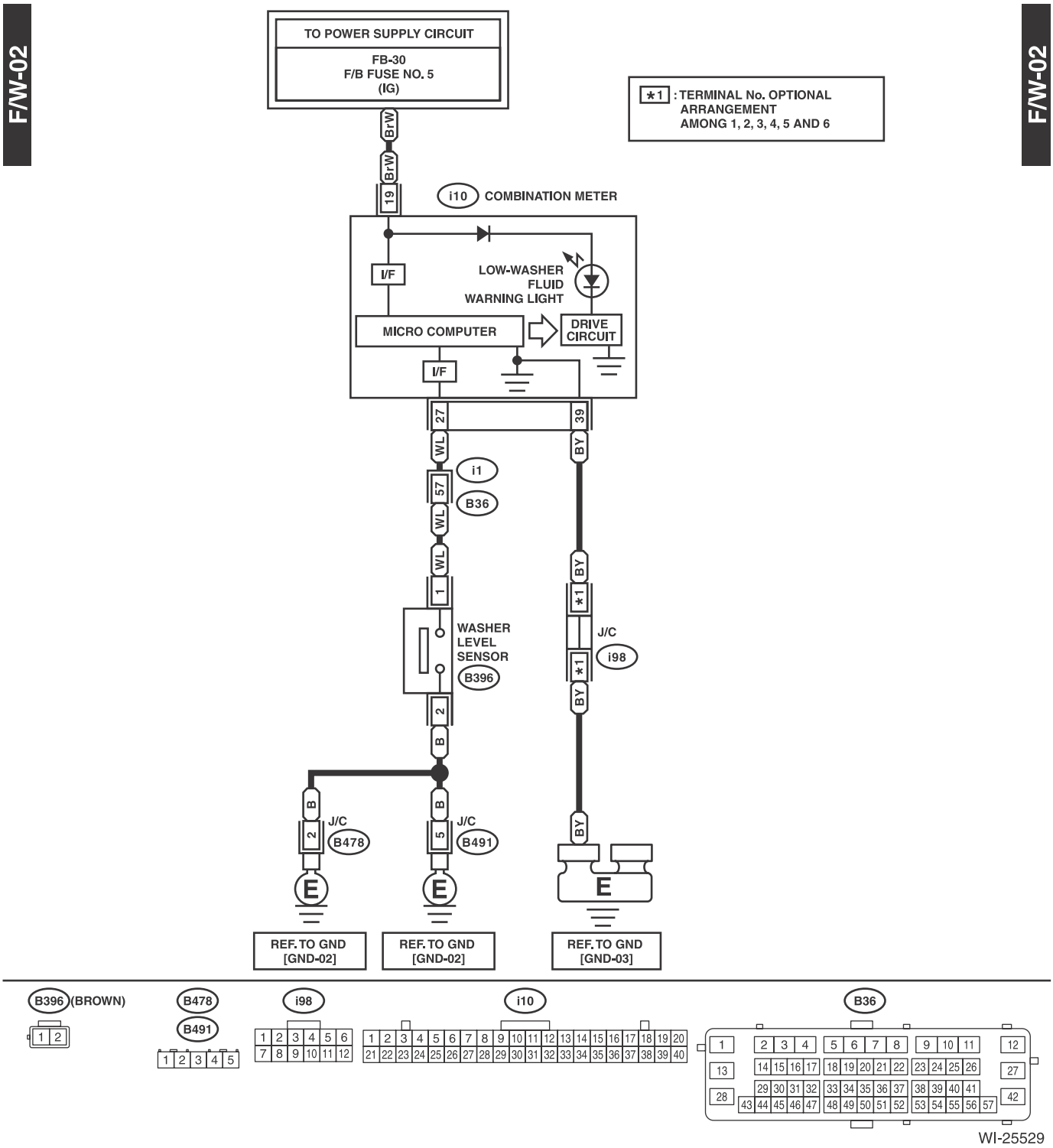

WI-25529

F/W-02

23.Fuel Gauge System

A: WIRING DIAGRAM

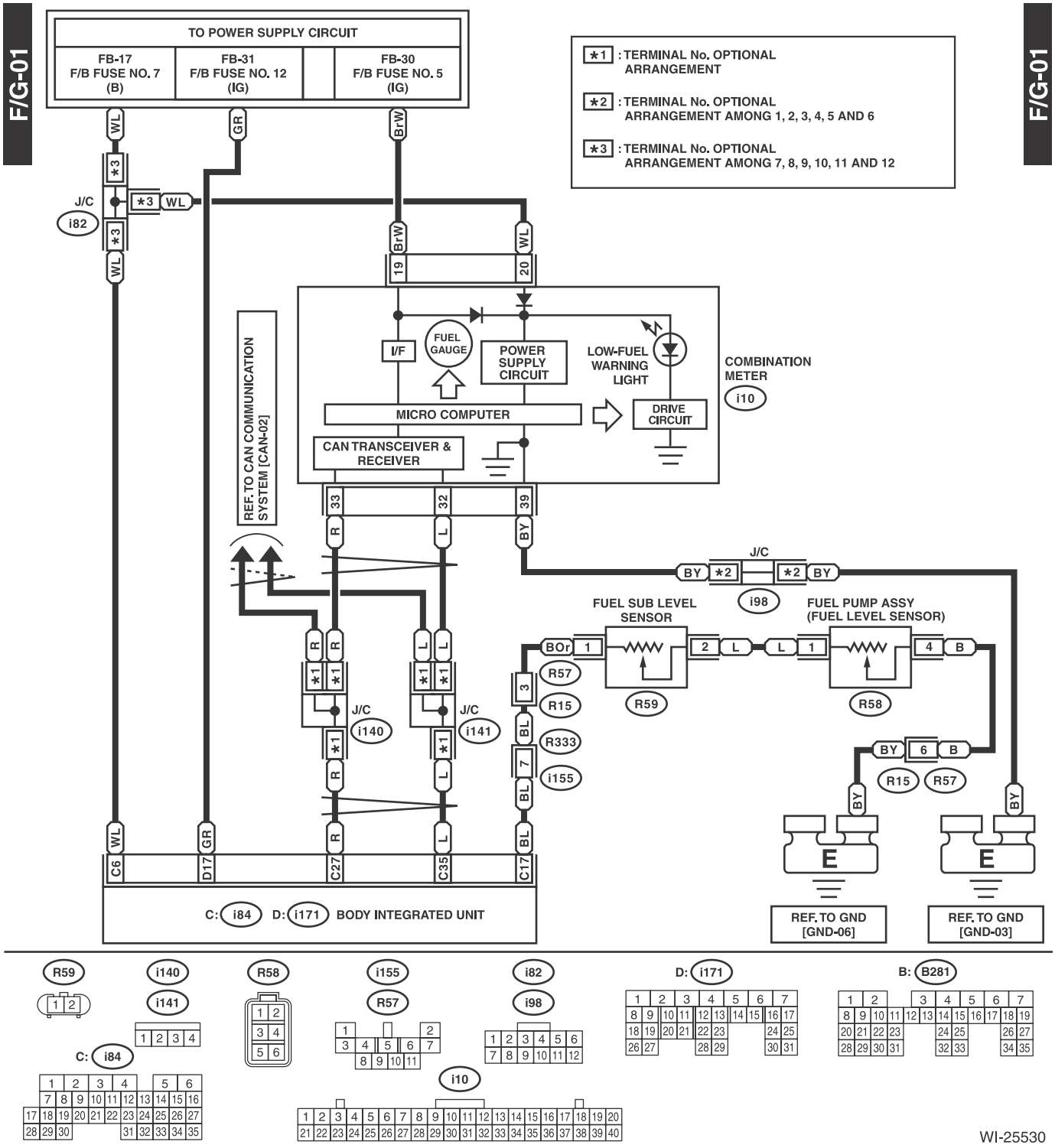

24.Headlight System

A: WIRING DIAGRAM

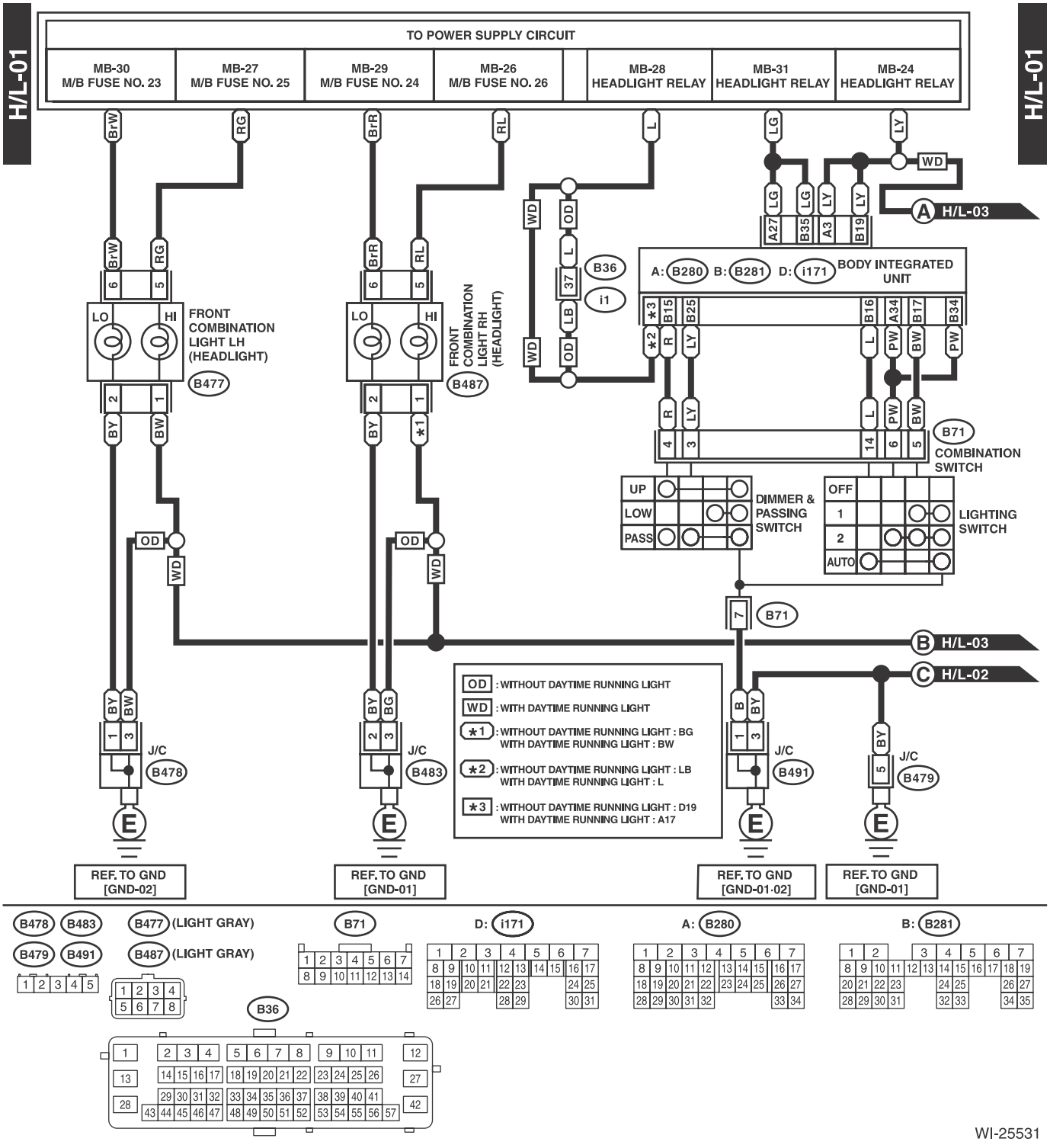

H/L-02

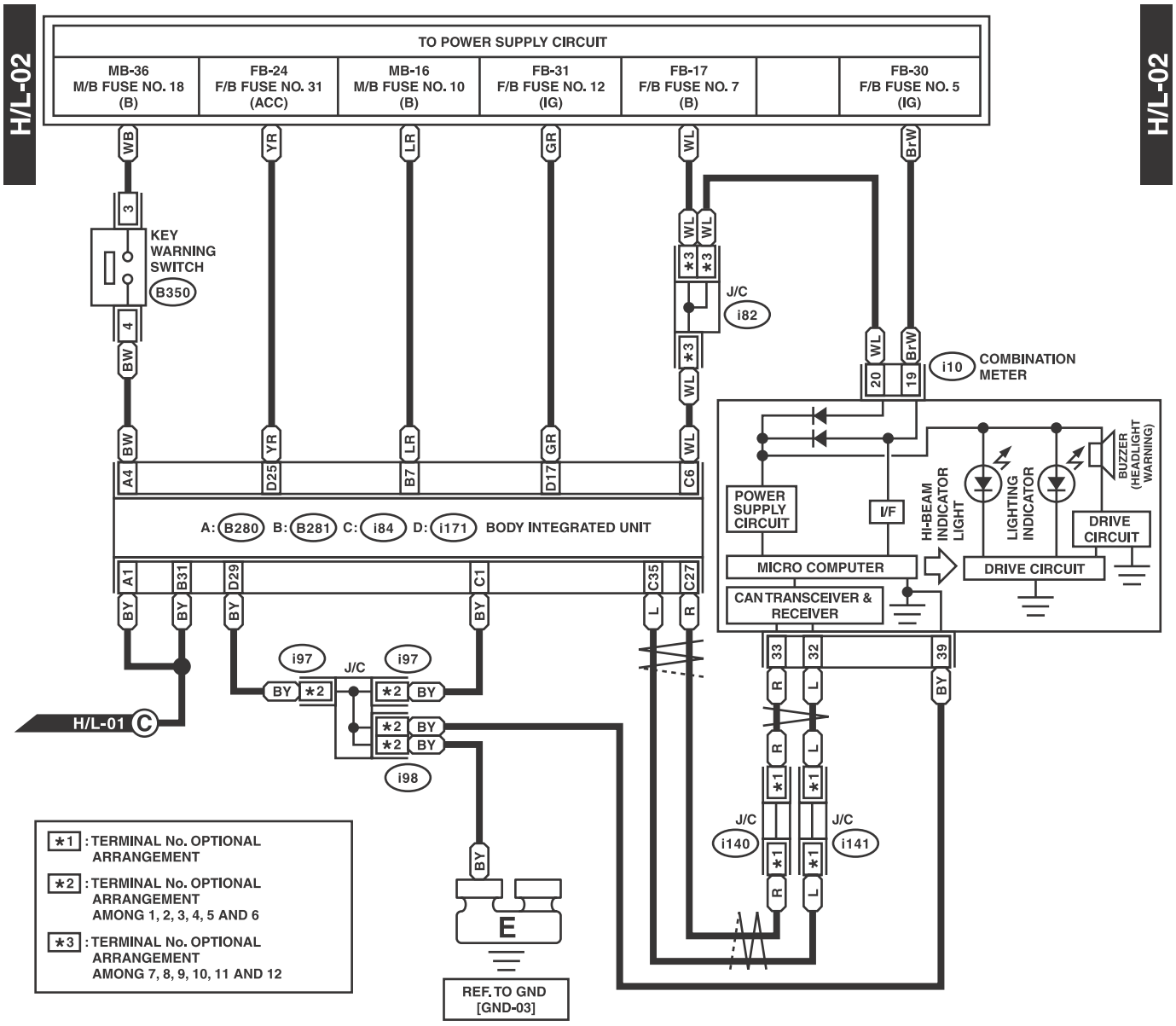

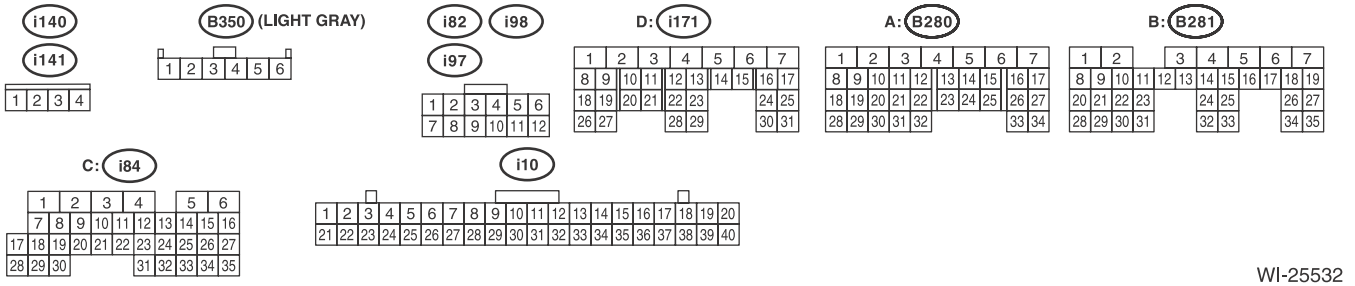

WI-25532

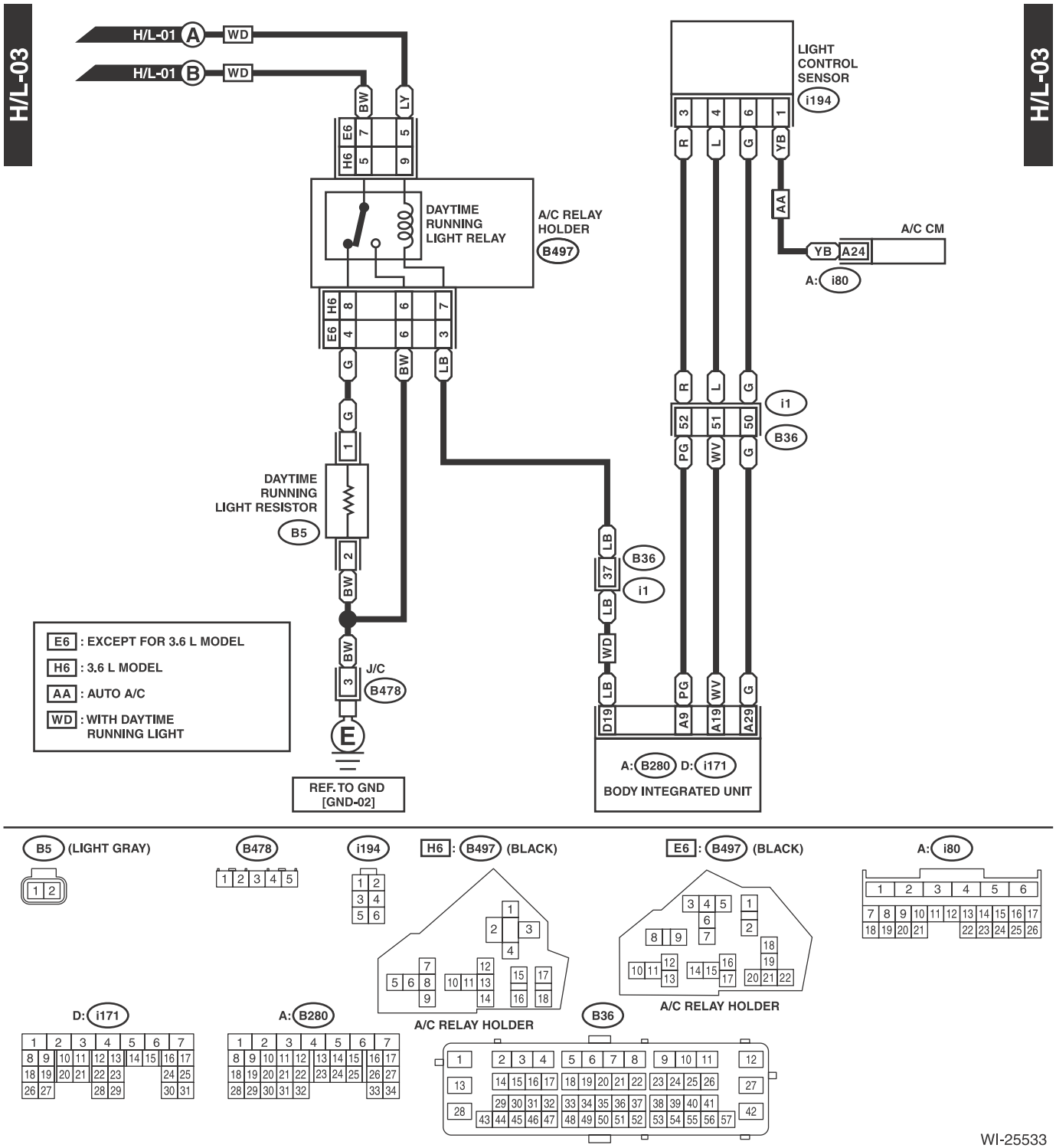
H/L-03
H/L-01 A
WD
H/L-01 B
WD
BW
LY
E6 7 5
H6 5 9
DAYTIME RUNNING LIGHT RELAY
A/C RELAY HOLDER
B497
H6 8 6 7
E6 4 6 3
G
BW
LB
G 1
DAYTIME RUNNING LIGHT RESISTOR
B5
2
BW
BW 3
J/C
B478
E
REF. TO GND [GND-02]
LIGHT CONTROL SENSOR
i194
3 4 6 1
R L G YB
AA
A/C CM
YB A24
A: i80
R L G
i1
52 51 50
B36
PG WV G
LB 37
B36
i1
LB
WD
LB PG WV G
D19 A9 A19 A29
A: B280 D: i171
BODY INTEGRATED UNIT
E6 : EXCEPT FOR 3.6 L MODEL
H6 : 3.6 L MODEL
AA : AUTO A/C
WD : WITH DAYTIME RUNNING LIGHT
B5 (LIGHT GRAY)
B478
i194
H6 : B497 (BLACK)
E6 : B497 (BLACK)
A: i80
A/C RELAY HOLDER
A/C RELAY HOLDER
D: i171
A: B280
B36
WI-25533

25.Horn System

A: WIRING DIAGRAM

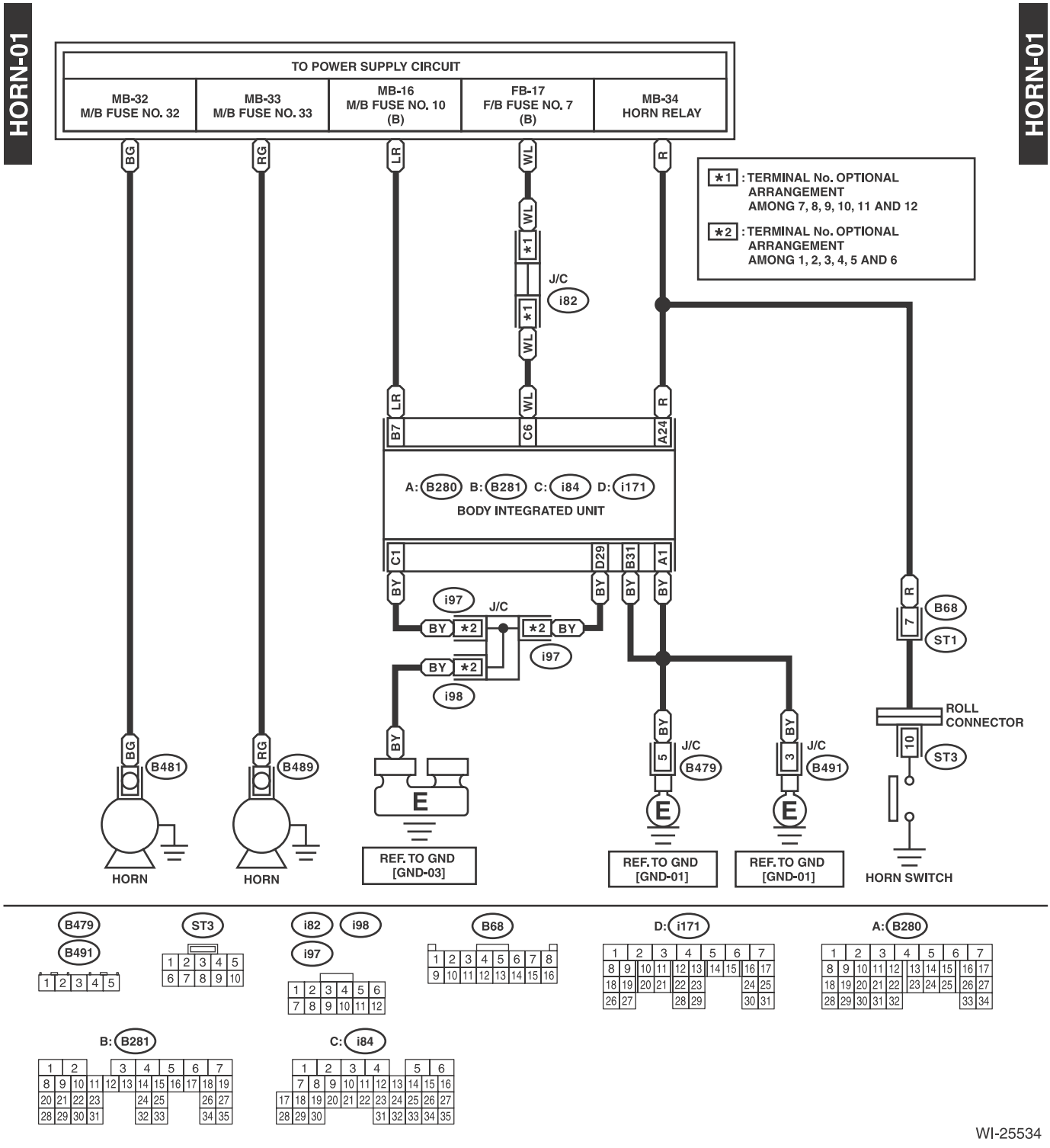

26.Immobilizer System

A: WIRING DIAGRAM

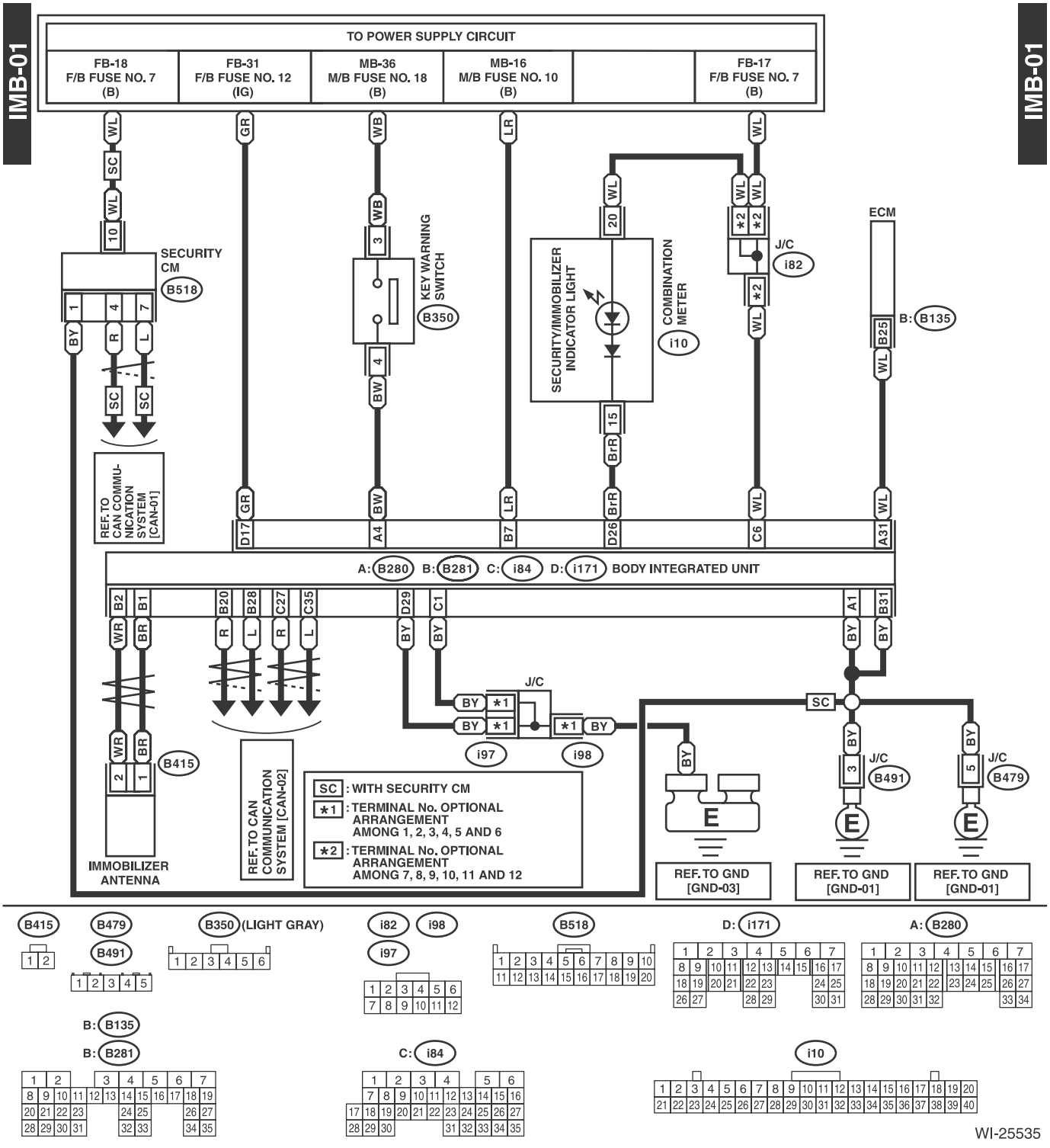

27.Interior Light System

A: WIRING DIAGRAM

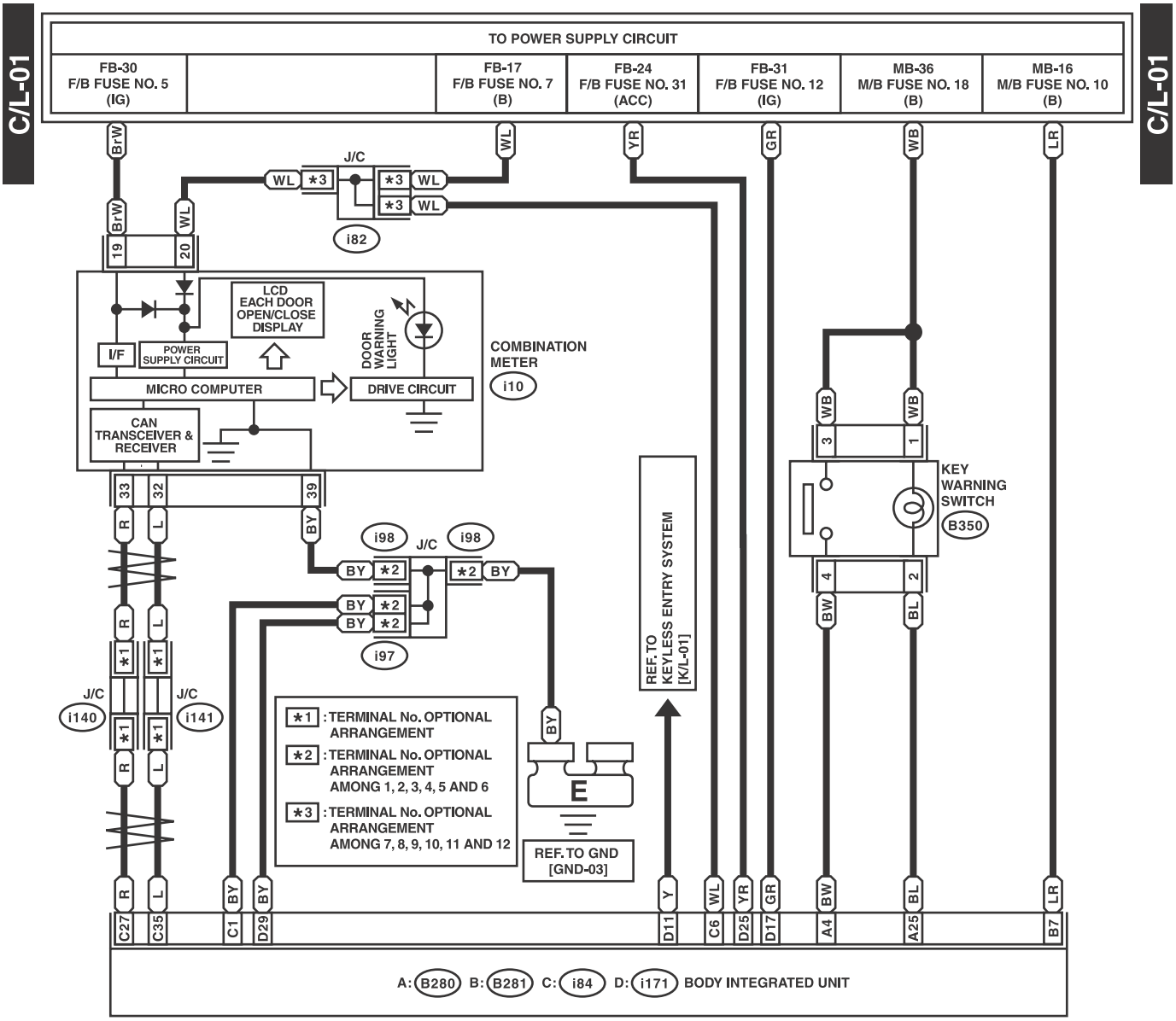

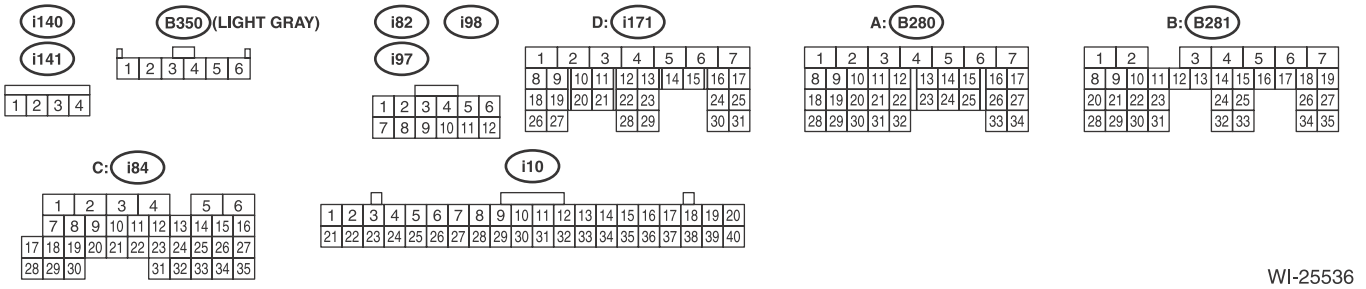

WI-25536

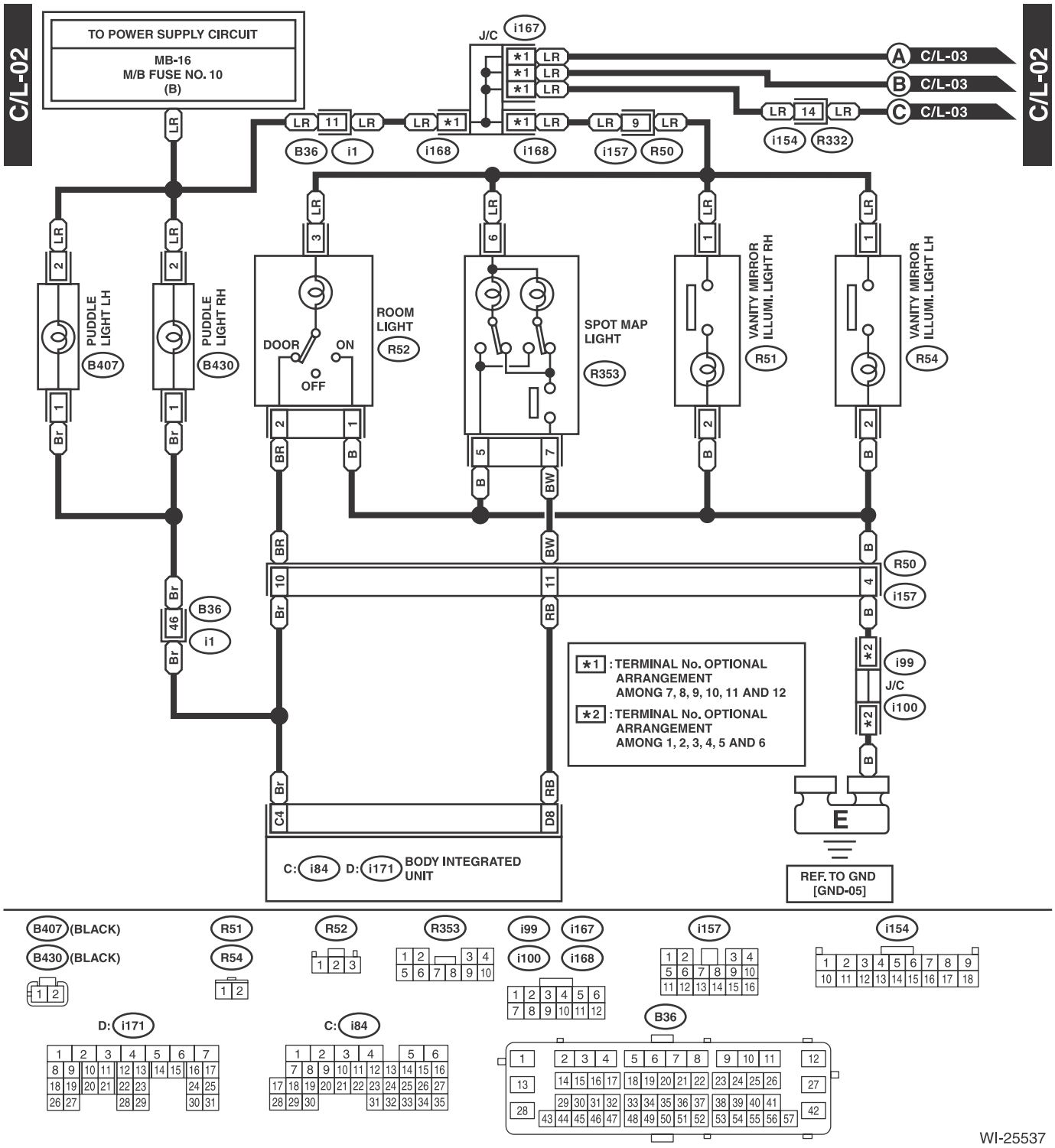
C/L-02
TO POWER SUPPLY CIRCUIT
MB-16
M/B FUSE NO. 10
(B)
J/C
i167
*1
LR
A C/L-03
B C/L-03
C C/L-03
11
9
14
B36
i1
i168
i157
R50
i154
R332
PUDDLE LIGHT LH
B407
PUDDLE LIGHT RH
B430
ROOM LIGHT
R52
DOOR
ON
OFF
SPOT MAP LIGHT
R353
VANITY MIRROR ILLUMI. LIGHT RH
R51
VANITY MIRROR ILLUMI. LIGHT LH
R54
*1 : TERMINAL No. OPTIONAL ARRANGEMENT AMONG 7, 8, 9, 10, 11 AND 12
*2 : TERMINAL No. OPTIONAL ARRANGEMENT AMONG 1, 2, 3, 4, 5 AND 6
i99
i100
J/C
E
REF. TO GND [GND-05]
C: i84 D: i171 BODY INTEGRATED UNIT
B407 (BLACK)
B430 (BLACK)
R51
R54
R52
R353
i99
i100
i167
i168
i157
i154
D: i171
C: i84
B36
WI-25537

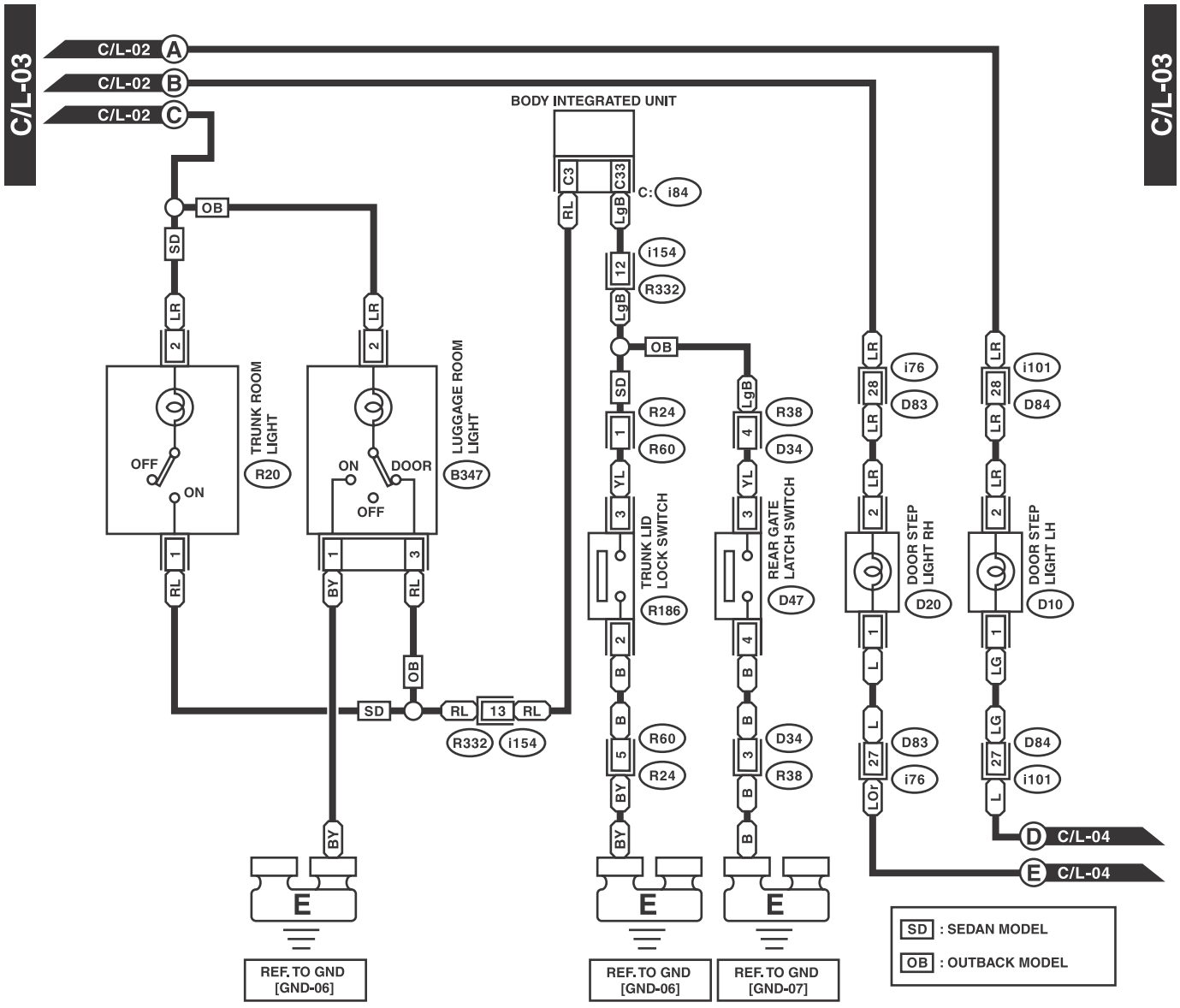
C/L-03
C/L-02 A
C/L-02 B
C/L-02 C
BODY INTEGRATED UNIT
C3
C33
C: i84
RL
LgB
i154
12
R332
OB
SD
LR
2
TRUNK ROOM LIGHT
R20
OFF
ON
LUGGAGE ROOM LIGHT
B347
ON
DOOR
OFF
1
3
BY
RL
13
R24
R60
YL
TRUNK LID LOCK SWITCH
R186
B
5
BY
R38
D34
REAR GATE LATCH SWITCH
D47
i76
D83
28
L
27
LOr
DOOR STEP LIGHT RH
D20
i101
D84
LG
DOOR STEP LIGHT LH
D10
D C/L-04
E C/L-04
E
REF. TO GND [GND-06]
REF. TO GND [GND-07]
SD : SEDAN MODEL
OB : OUTBACK MODEL

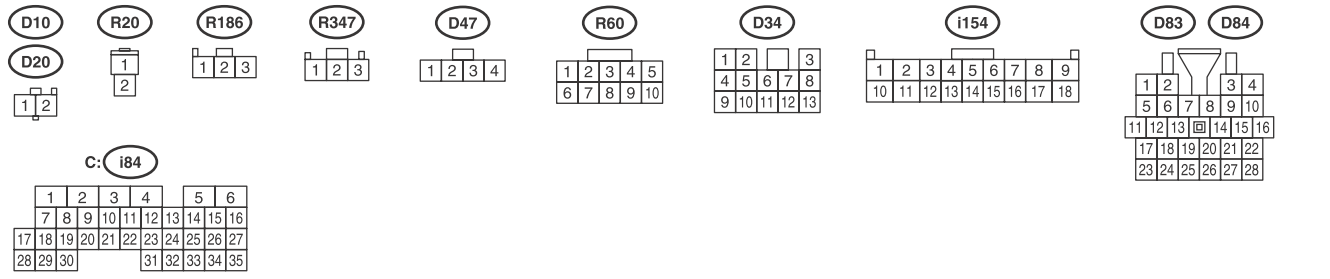
D10
D20
R20
R186
R347
D47
R60
D34
i154
D83
D84
C: i84

WI-25538

C/L-04

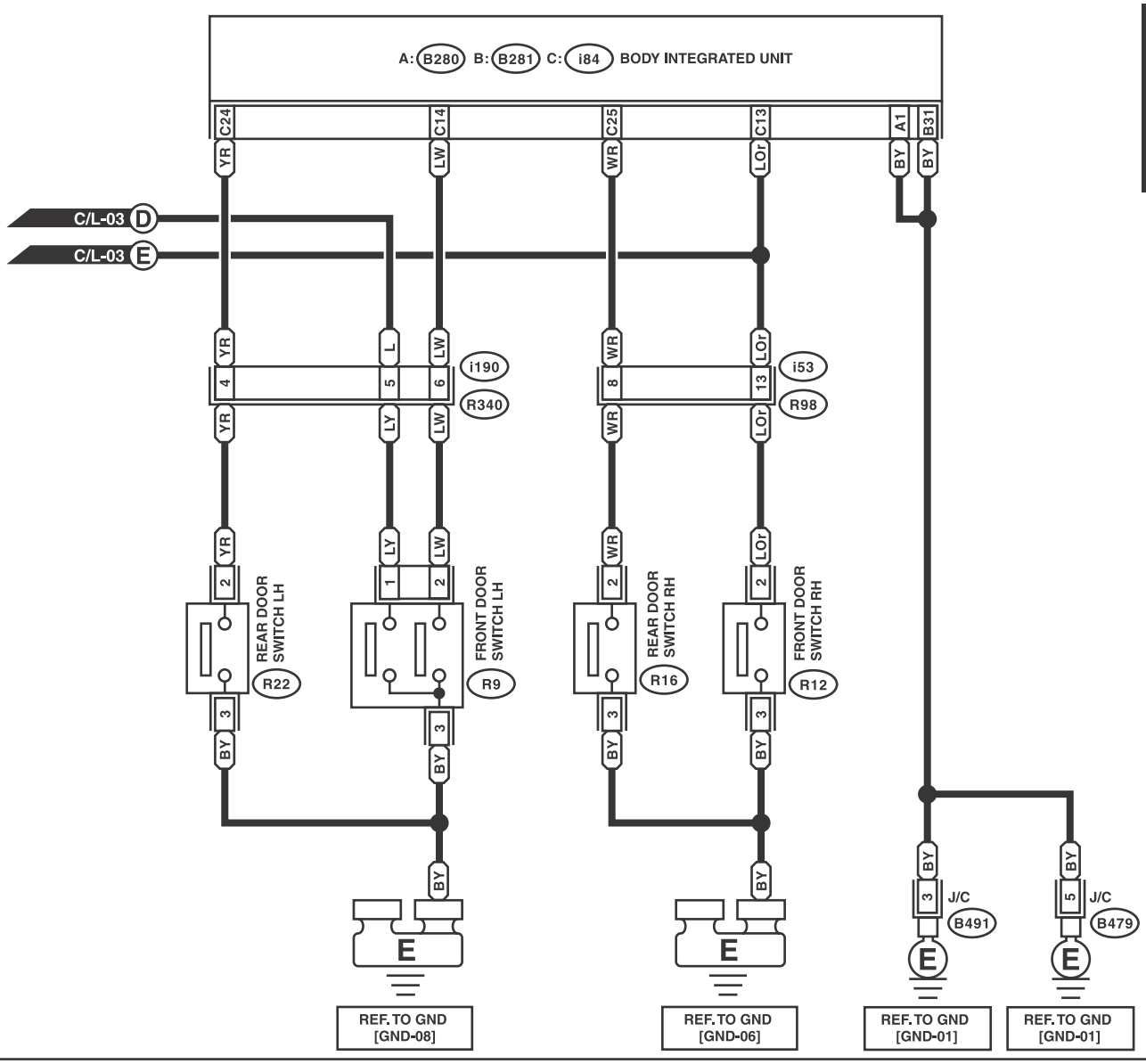

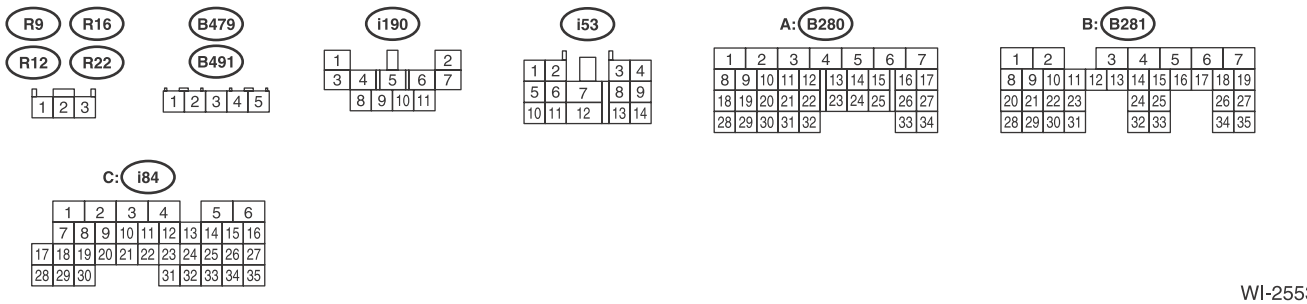

WI-25539

C/L-04

28.Keyless Entry System

A: WIRING DIAGRAM

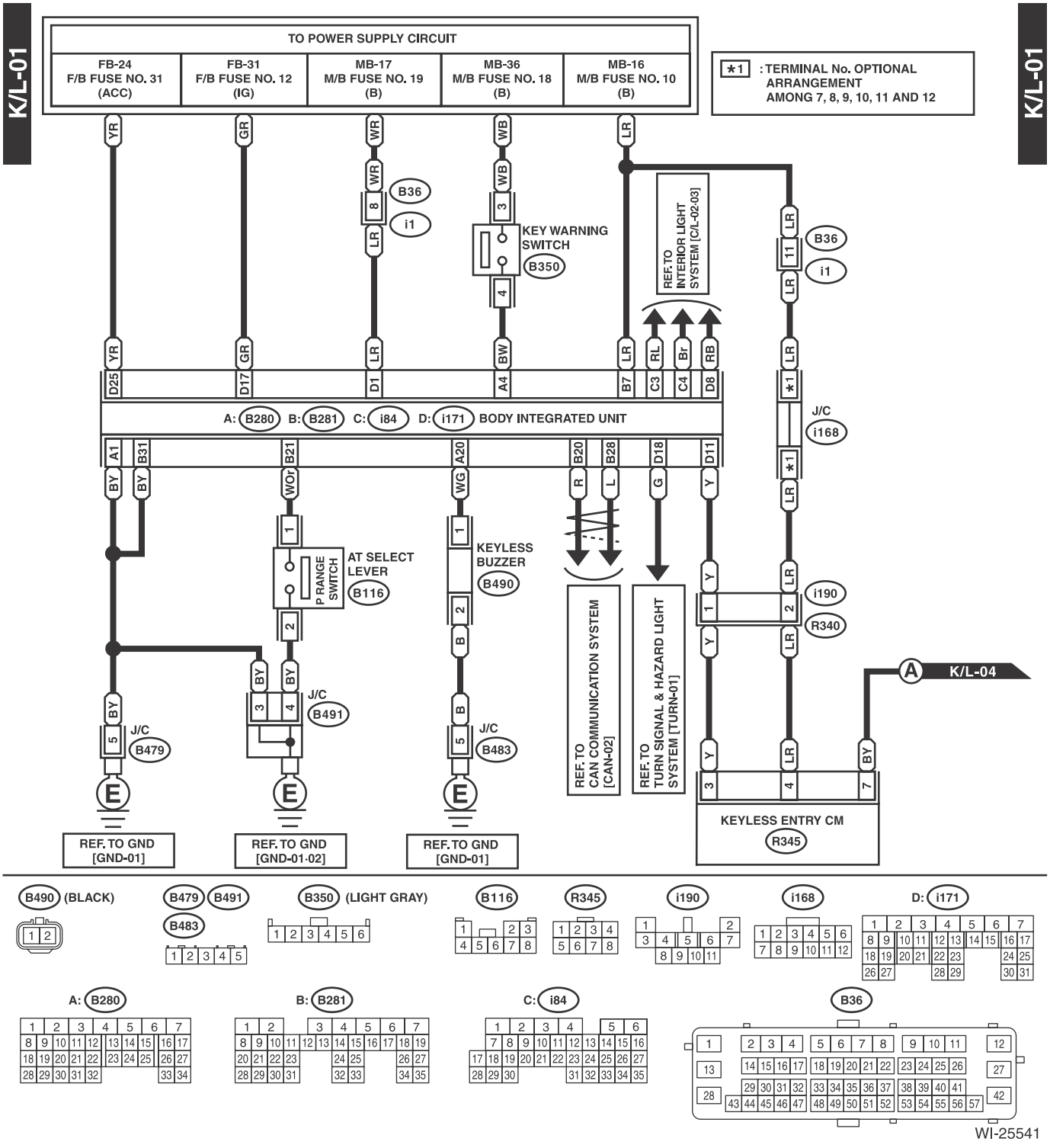

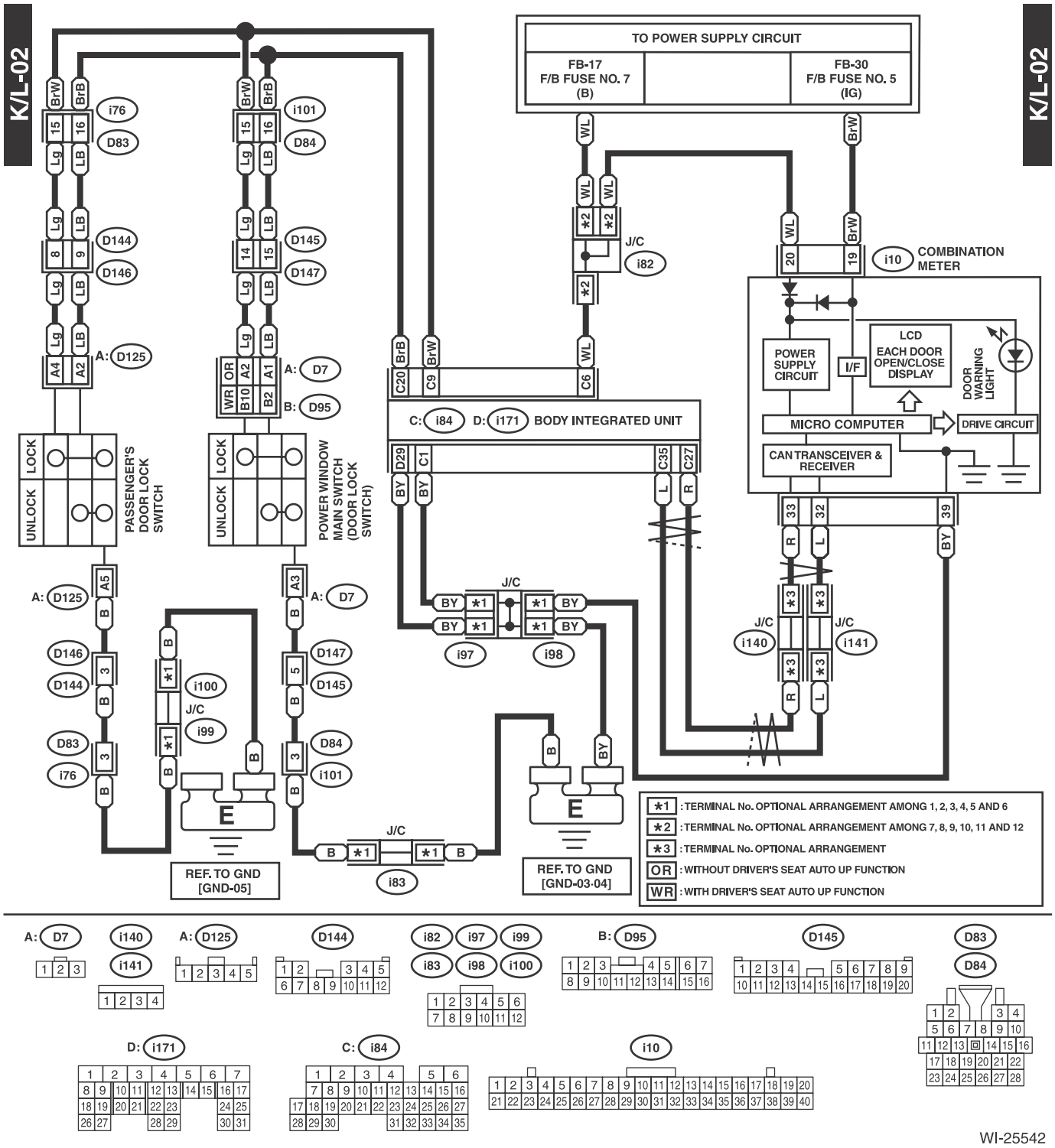
K/L-02
K/L-02
TO POWER SUPPLY CIRCUIT
FB-17
F/B FUSE NO. 7
(B)
FB-30
F/B FUSE NO. 5
(IG)
i76
D83
i101
D84
D144
D146
D145
D147
A: D125
A: D7
B: D95
PASSENGER'S DOOR LOCK SWITCH
POWER WINDOW MAIN SWITCH (DOOR LOCK SWITCH)
LOCK
UNLOCK
J/C
i82
C: i84 D: i171 BODY INTEGRATED UNIT
i10 COMBINATION METER
POWER SUPPLY CIRCUIT
I/F
LCD
EACH DOOR OPEN/CLOSE DISPLAY
DOOR WARNING LIGHT
MICRO COMPUTER
DRIVE CIRCUIT
CAN TRANSCEIVER & RECEIVER
i97
i98
i100
i99
i140
i141
i83
REF. TO GND [GND-05]
REF. TO GND [GND-03·04]
*1 : TERMINAL No. OPTIONAL ARRANGEMENT AMONG 1, 2, 3, 4, 5 AND 6
*2 : TERMINAL No. OPTIONAL ARRANGEMENT AMONG 7, 8, 9, 10, 11 AND 12
*3 : TERMINAL No. OPTIONAL ARRANGEMENT
OR : WITHOUT DRIVER'S SEAT AUTO UP FUNCTION
WR : WITH DRIVER'S SEAT AUTO UP FUNCTION

A: D7
i140
i141
A: D125
D144
i82
i97
i99
i83
i98
i100
B: D95
D145
D83
D84
D: i171
C: i84
i10

WI-25542

K/L-03

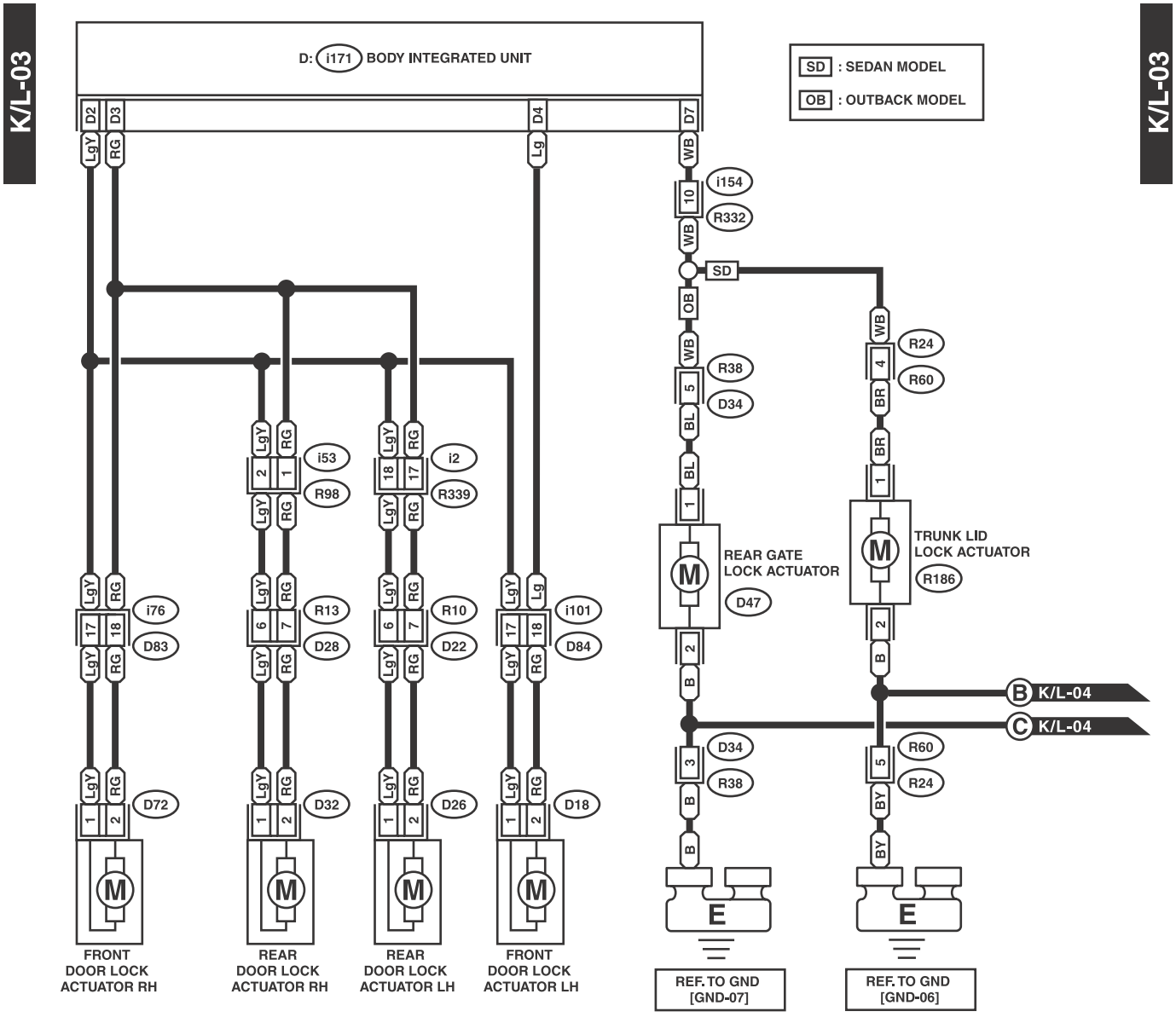

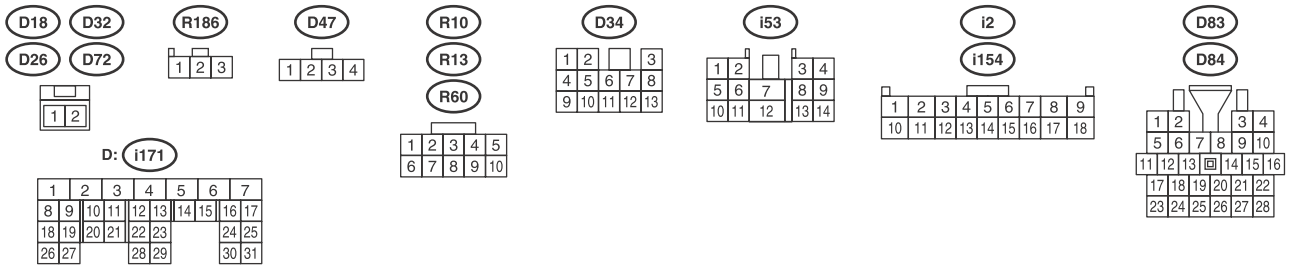

WI-25543

K/L-03

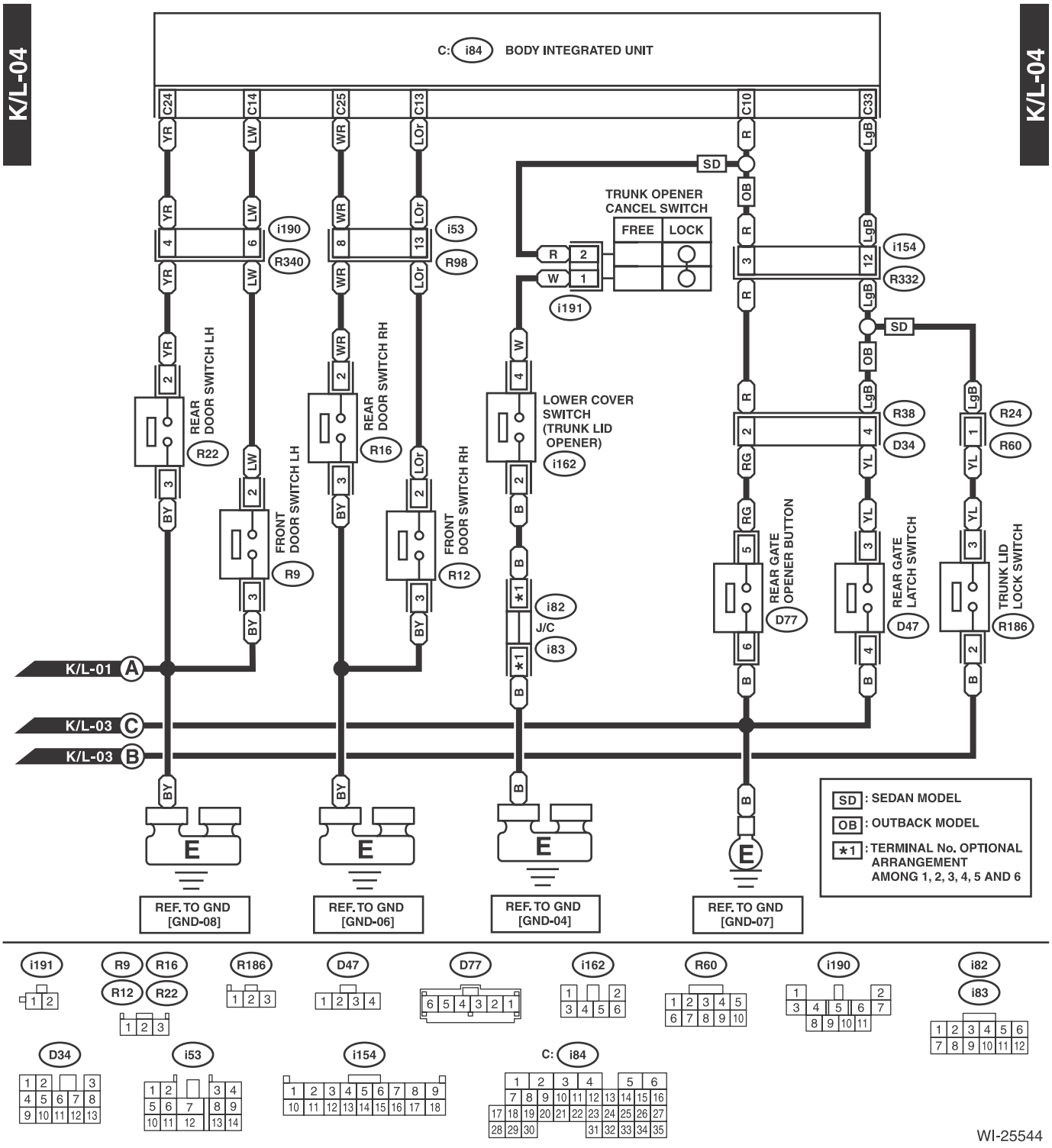
K/L-04
K/L-04
C: i84 BODY INTEGRATED UNIT
C24
C14
C25
C13
C10
C33
i190
R340
i53
R98
TRUNK OPENER CANCEL SWITCH
FREE
LOCK
i191
i154
R332
SD
OB
REAR DOOR SWITCH LH
R22
REAR DOOR SWITCH RH
R16
LOWER COVER SWITCH (TRUNK LID OPENER)
i162
R38
D34
R24
R60
FRONT DOOR SWITCH LH
R9
FRONT DOOR SWITCH RH
R12
i82
J/C
i83
REAR GATE OPENER BUTTON
D77
REAR GATE LATCH SWITCH
D47
TRUNK LID LOCK SWITCH
R186
K/L-01 A
K/L-03 C
K/L-03 B
E
REF. TO GND [GND-08]
REF. TO GND [GND-06]
REF. TO GND [GND-04]
REF. TO GND [GND-07]
SD : SEDAN MODEL
OB : OUTBACK MODEL
*1 : TERMINAL No. OPTIONAL ARRANGEMENT AMONG 1, 2, 3, 4, 5 AND 6
i191
R9
R16
R12
R22
R186
D47
D77
i162
R60
i190
i82
i83
D34
i53
i154
C: i84
WI-25544

29.Navigation System

A: WIRING DIAGRAM

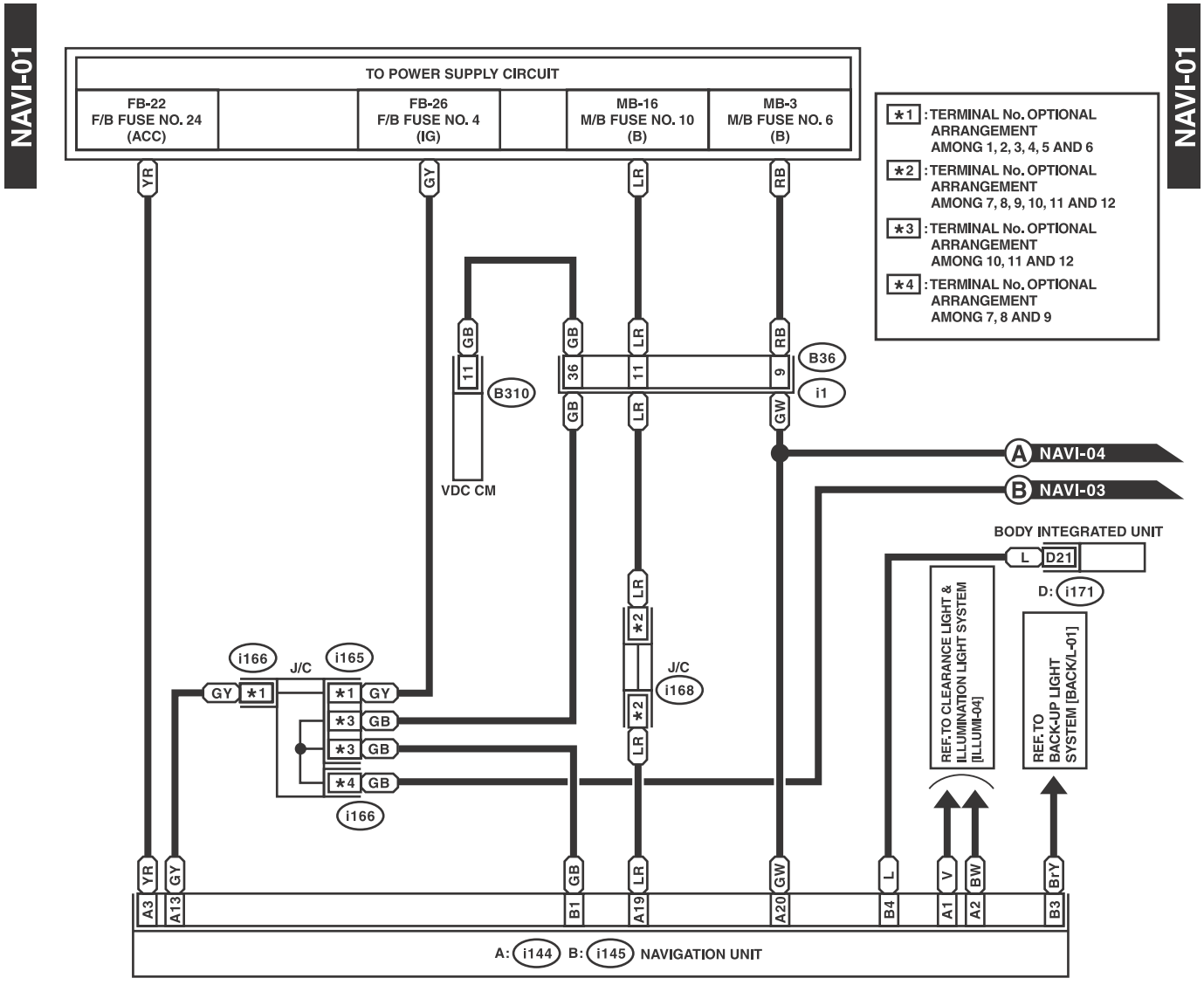

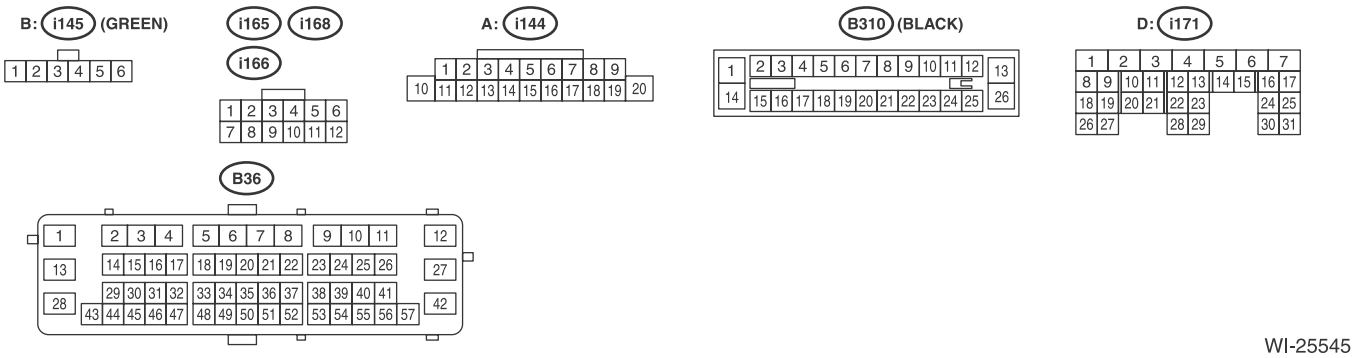

WI-25545

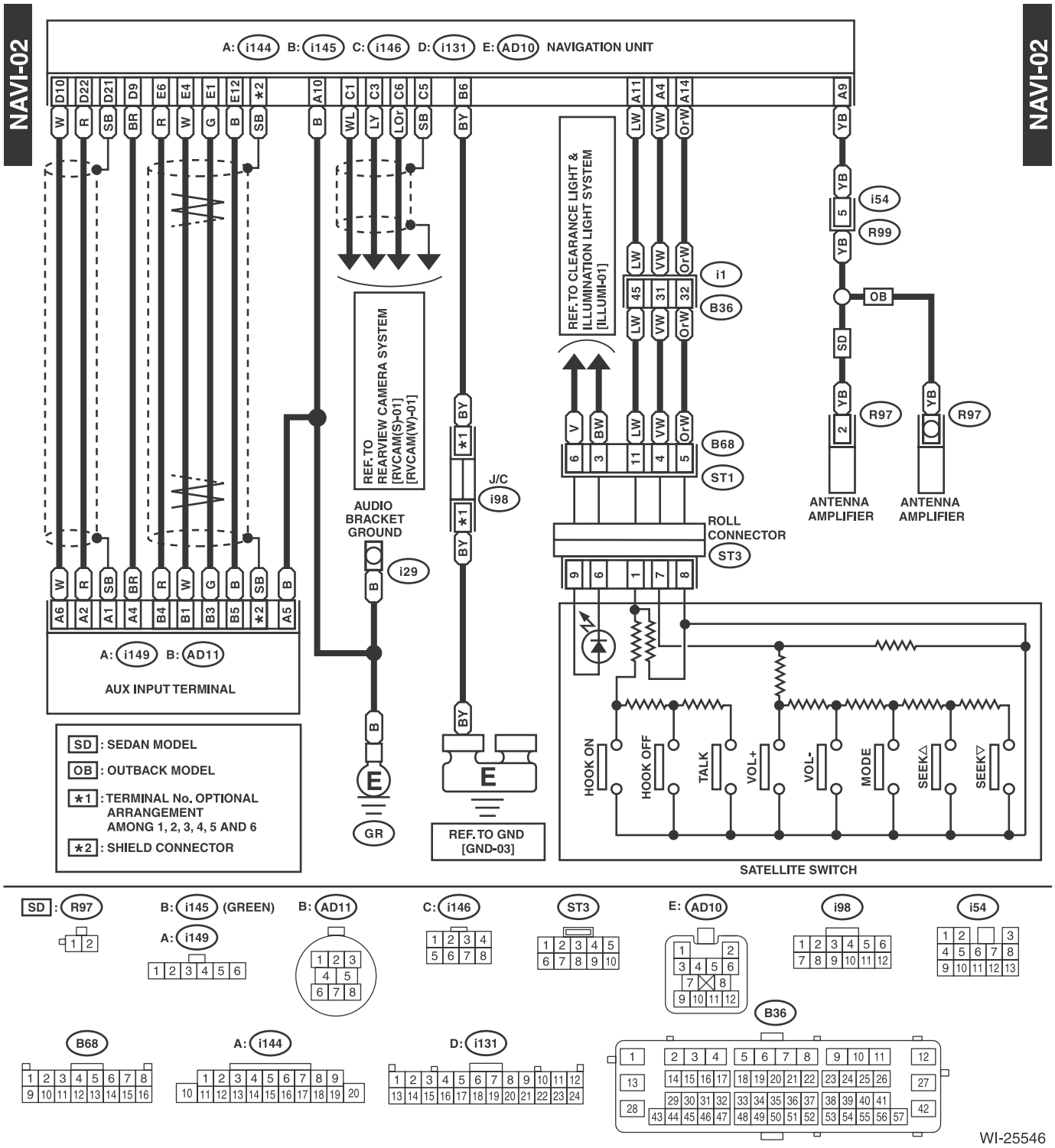
NAVI-02
NAVI-02
A: i144 B: i145 C: i146 D: i131 E: AD10 NAVIGATION UNIT
REF. TO REARVIEW CAMERA SYSTEM [RVCAM(S)-01] [RVCAM(W)-01]
REF. TO CLEARANCE LIGHT & ILLUMINATION LIGHT SYSTEM [ILLUMI-01]
AUDIO BRACKET GROUND
i29
J/C
i98
i1
B36
B68
ST1
ROLL CONNECTOR
ST3
i54
R99
R97
R97
ANTENNA AMPLIFIER
ANTENNA AMPLIFIER
A: i149 B: AD11
AUX INPUT TERMINAL
SD : SEDAN MODEL
OB : OUTBACK MODEL
*1 : TERMINAL No. OPTIONAL ARRANGEMENT AMONG 1, 2, 3, 4, 5 AND 6
*2 : SHIELD CONNECTOR
GR
REF. TO GND [GND-03]
HOOK ON
HOOK OFF
TALK
VOL+
VOL-
MODE
SEEK△
SEEK▽
SATELLITE SWITCH
SD : R97
B: i145 (GREEN)
A: i149
B: AD11
C: i146
ST3
E: AD10
i98
i54
B68
A: i144
D: i131
B36
WI-25546

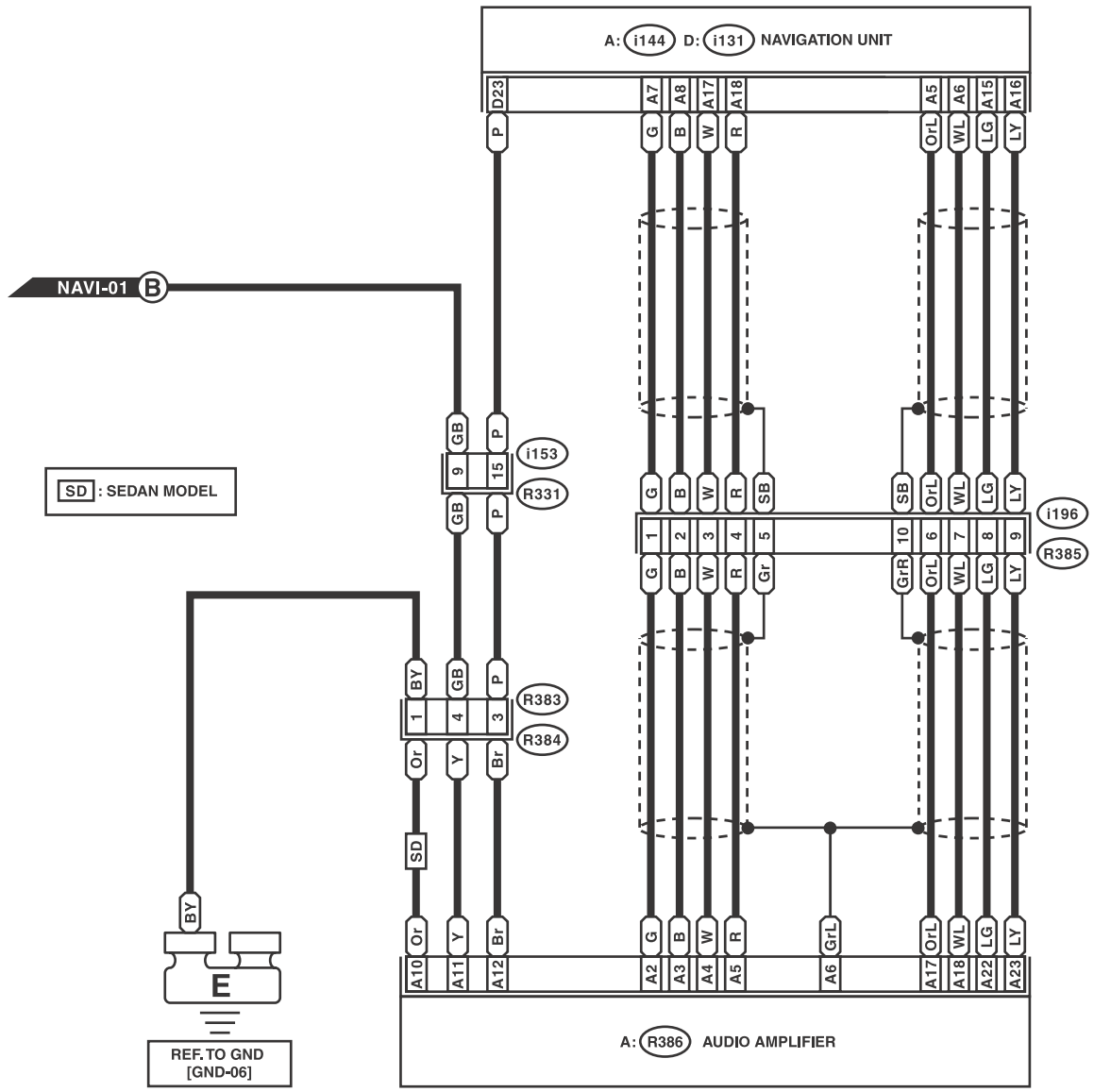
A: i144 D: i131 NAVIGATION UNIT
D23 A7 A8 A17 A18 A5 A6 A15 A16
P G B W R OrL WL LG LY
NAVI-01 B
SD : SEDAN MODEL
GB P i153
9 15
GB P R331
G B W R SB SB OrL WL LG LY i196
1 2 3 4 5 10 6 7 8 9 R385
G B W R Gr GrR OrL WL LG LY
BY GB P R383
1 4 3
Or Y Br R384
SD
BY
E
REF. TO GND [GND-06]
Or Y Br G B W R GrL OrL WL LG LY
A10 A11 A12 A2 A3 A4 A5 A6 A17 A18 A22 A23
A: R386 AUDIO AMPLIFIER

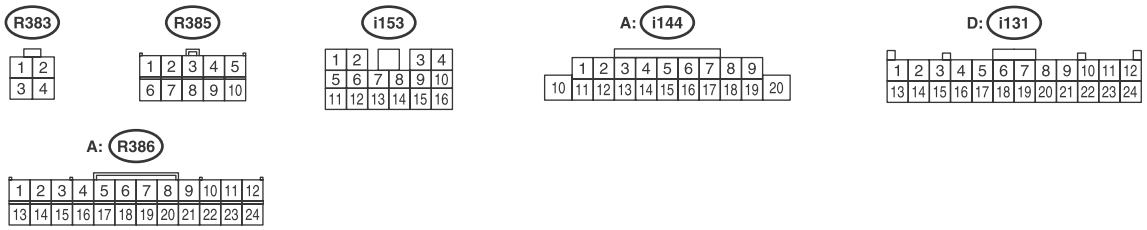
R383
1 2
3 4
R385
1 2 3 4 5
6 7 8 9 10
i153
1 2 3 4
5 6 7 8 9 10
11 12 13 14 15 16
A: i144
1 2 3 4 5 6 7 8 9
10 11 12 13 14 15 16 17 18 19 20
D: i131
1 2 3 4 5 6 7 8 9 10 11 12
13 14 15 16 17 18 19 20 21 22 23 24
A: R386
1 2 3 4 5 6 7 8 9 10 11 12
13 14 15 16 17 18 19 20 21 22 23 24

WI-25547

NAVI-04

NAVI-04

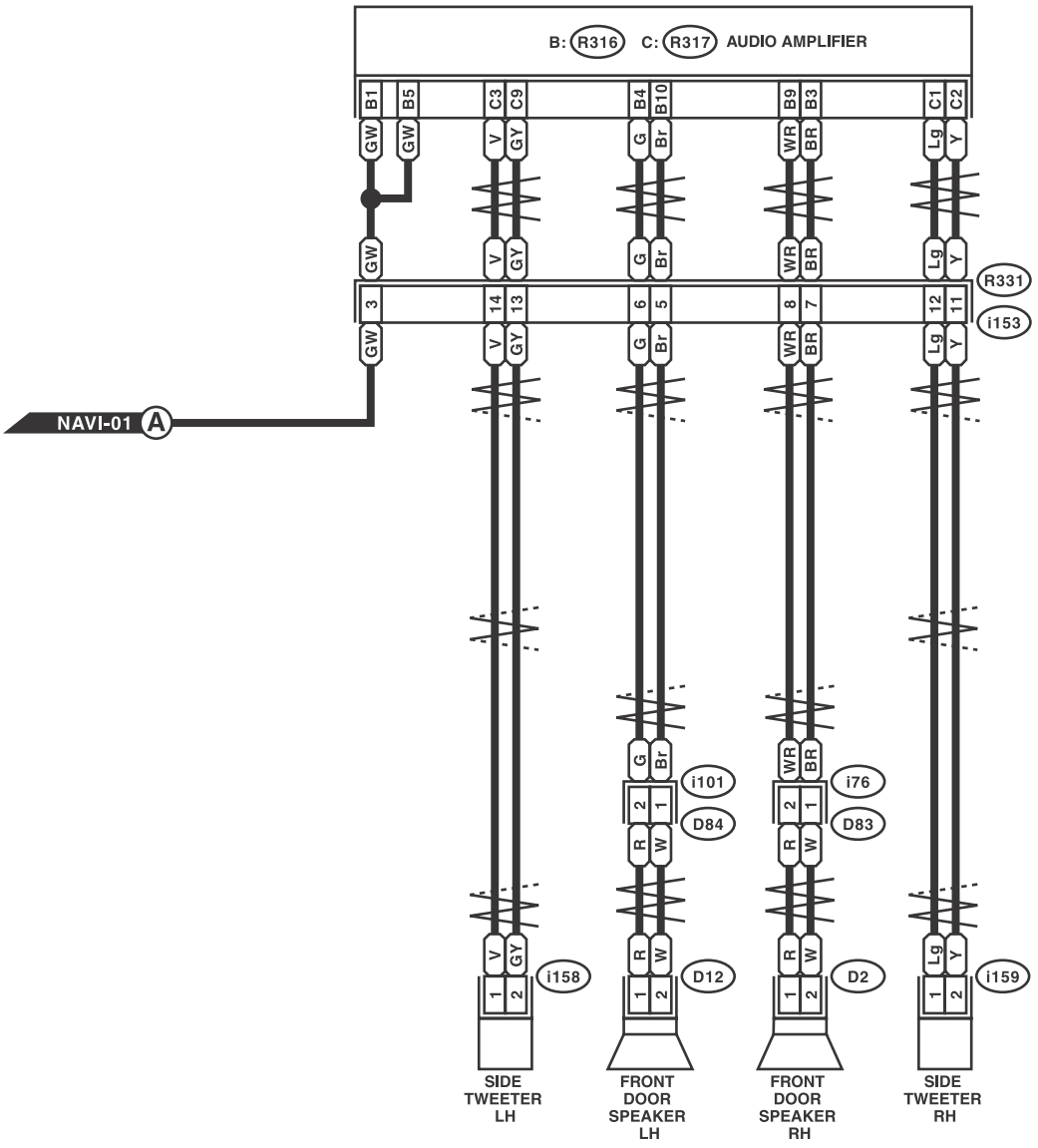

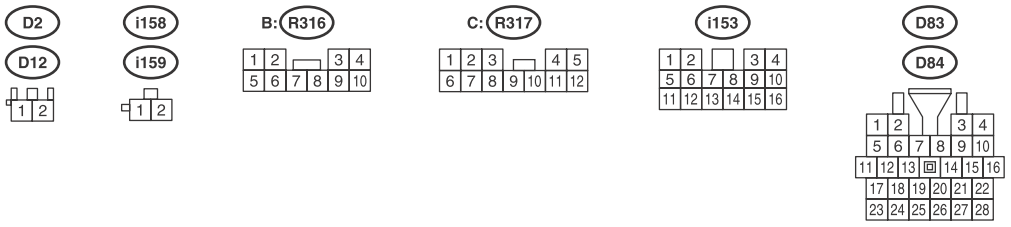

WI-25548

NAVI-05

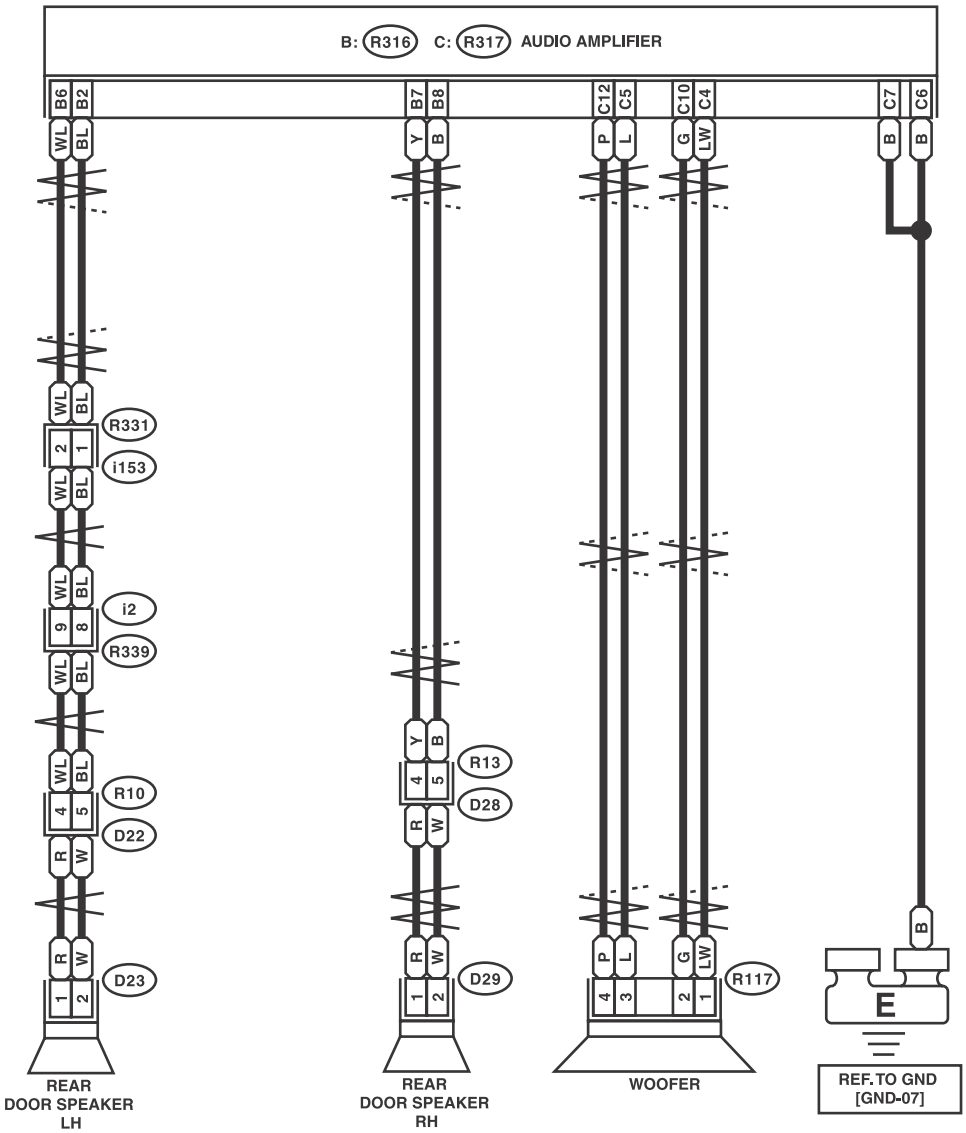

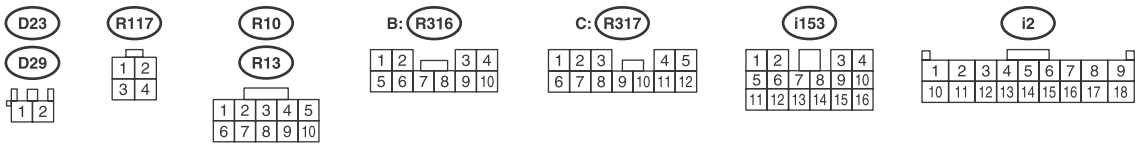

WI-25549

30.Occupant Detection System

A: WIRING DIAGRAM

ODS-01

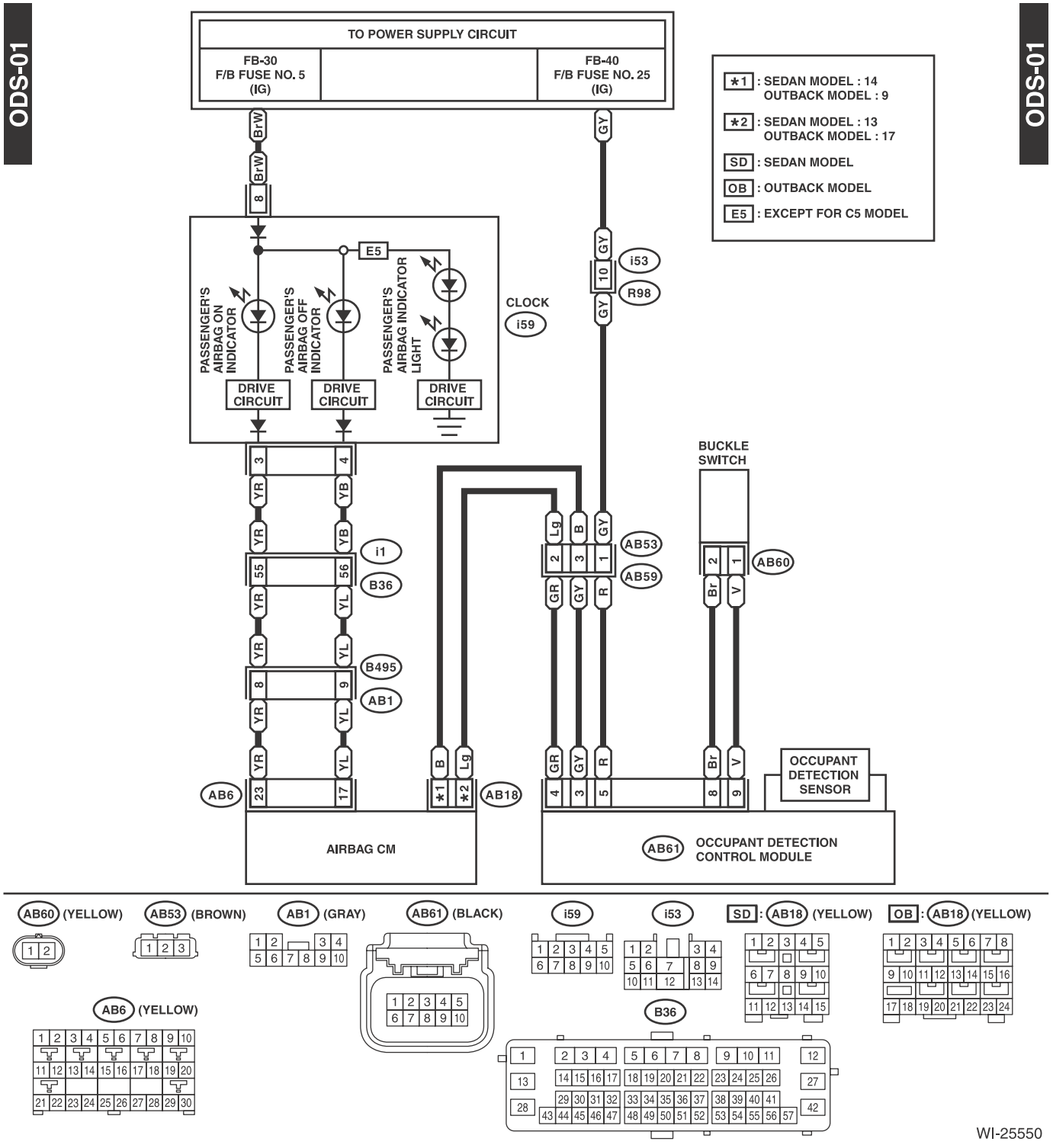

ODS-01

31.Oil Pressure Warning Light System

A: WIRING DIAGRAM

OIL/P-01

OIL/P-01

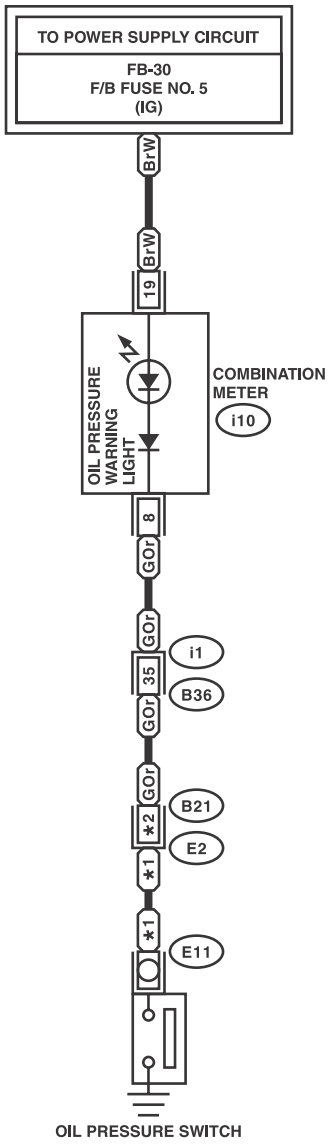

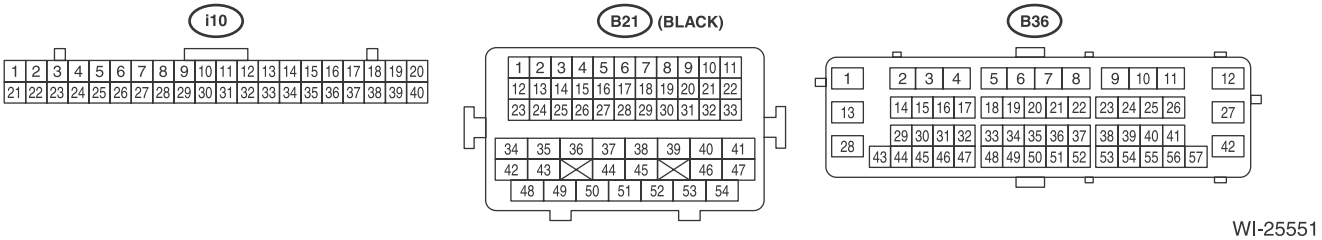

32.Parking Brake / Brake Fluid Level Warning Light System

A: WIRING DIAGRAM

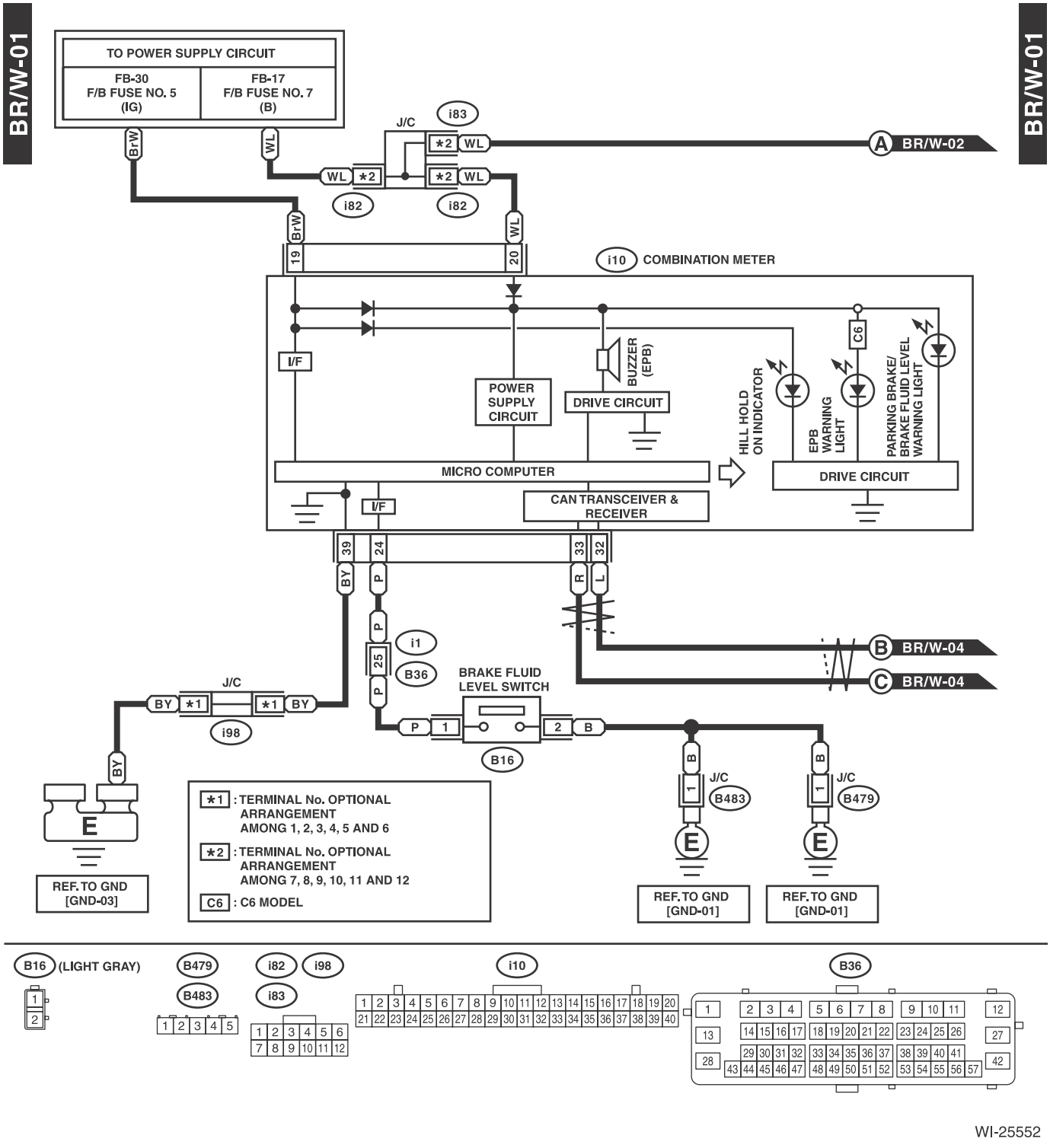

WI-25552

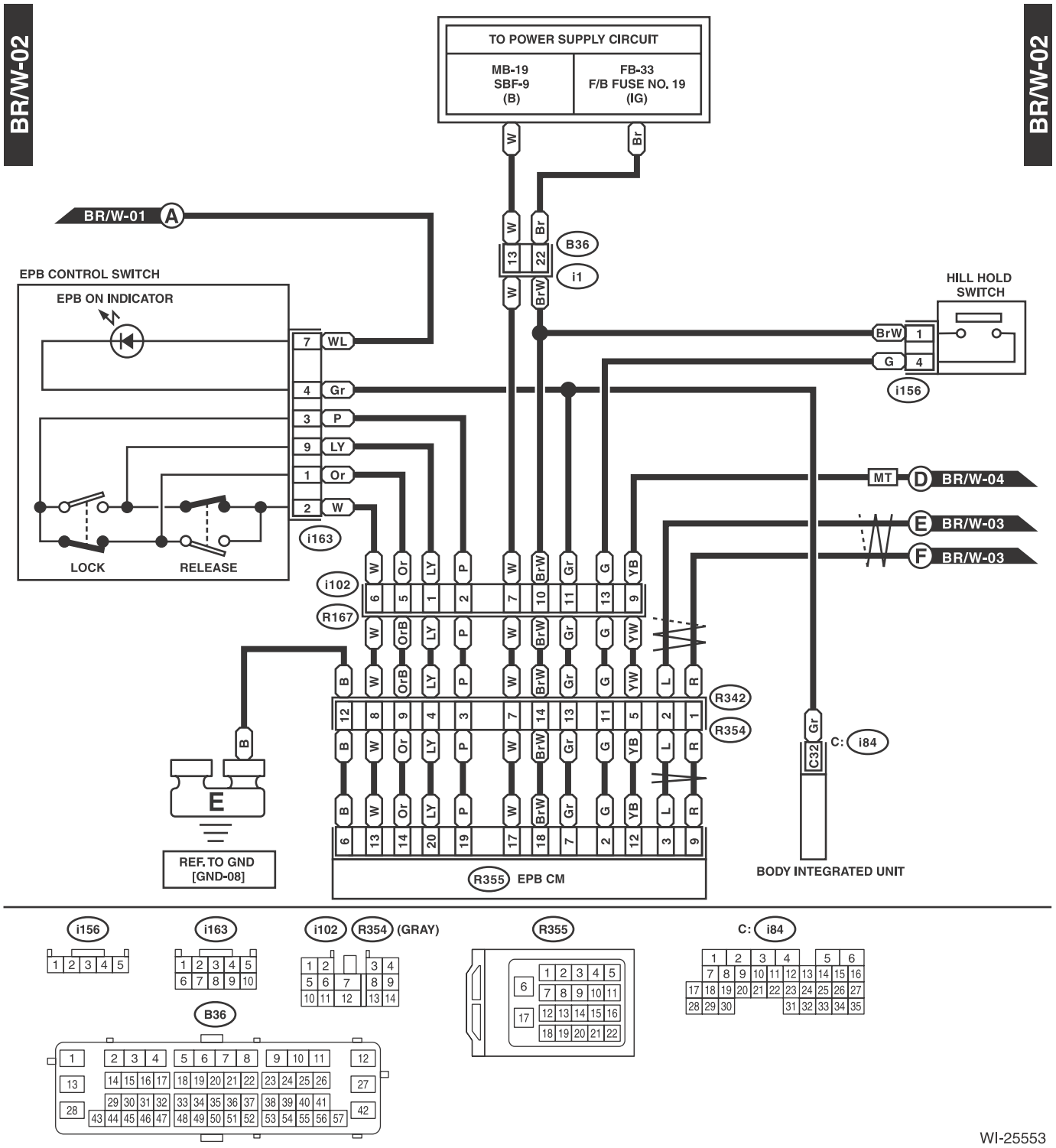
BR/W-02
BR/W-02
TO POWER SUPPLY CIRCUIT
MB-19
SBF-9
(B)
FB-33
F/B FUSE NO. 19
(IG)
BR/W-01
A
B36
i1
EPB CONTROL SWITCH
EPB ON INDICATOR
LOCK
RELEASE
i163
HILL HOLD SWITCH
i156
MT
D
BR/W-04
E
BR/W-03
F
BR/W-03
i102
R167
R342
R354
C: i84
C32
BODY INTEGRATED UNIT
R355
EPB CM
REF. TO GND
[GND-08]
i156
i163
i102
R354
(GRAY)
R355
C: i84
B36

WI-25553

BR/W-03

BR/W-03

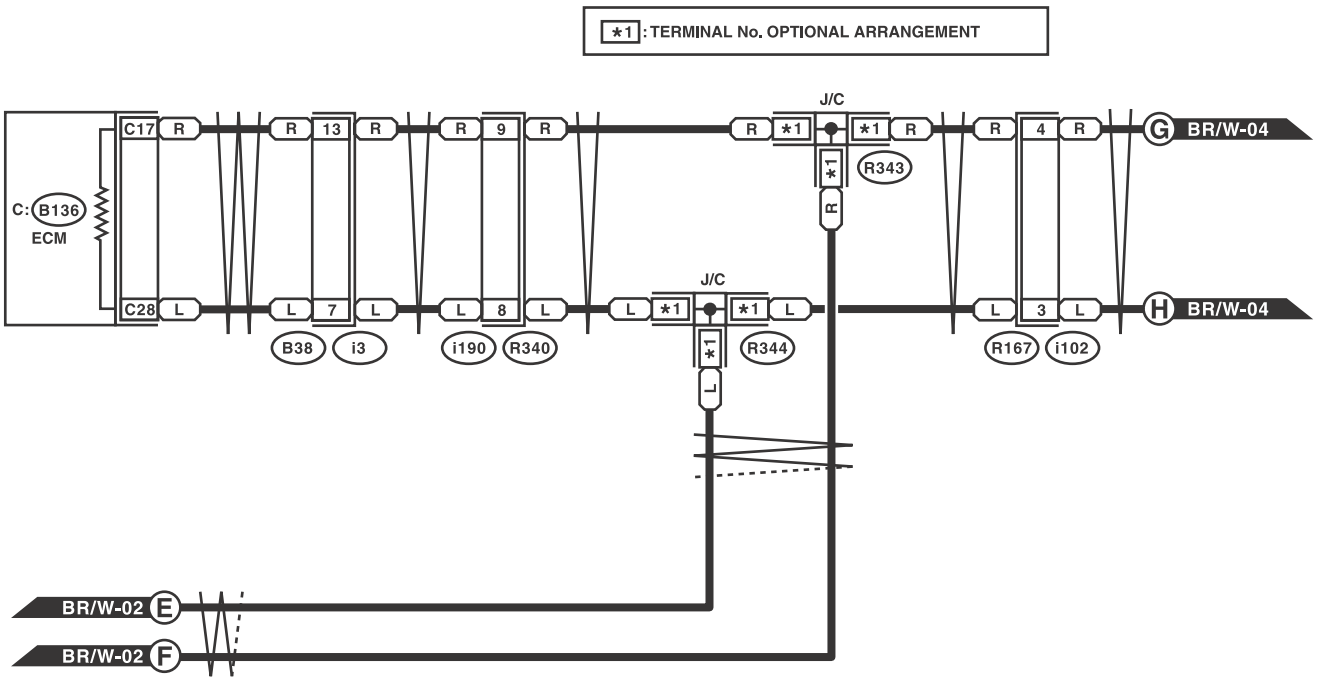

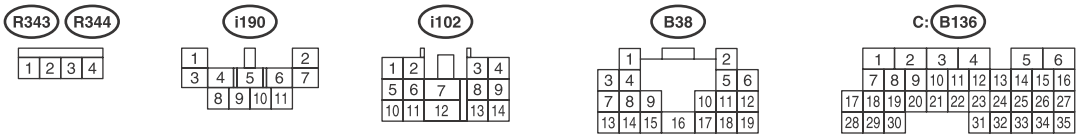

WI-25554

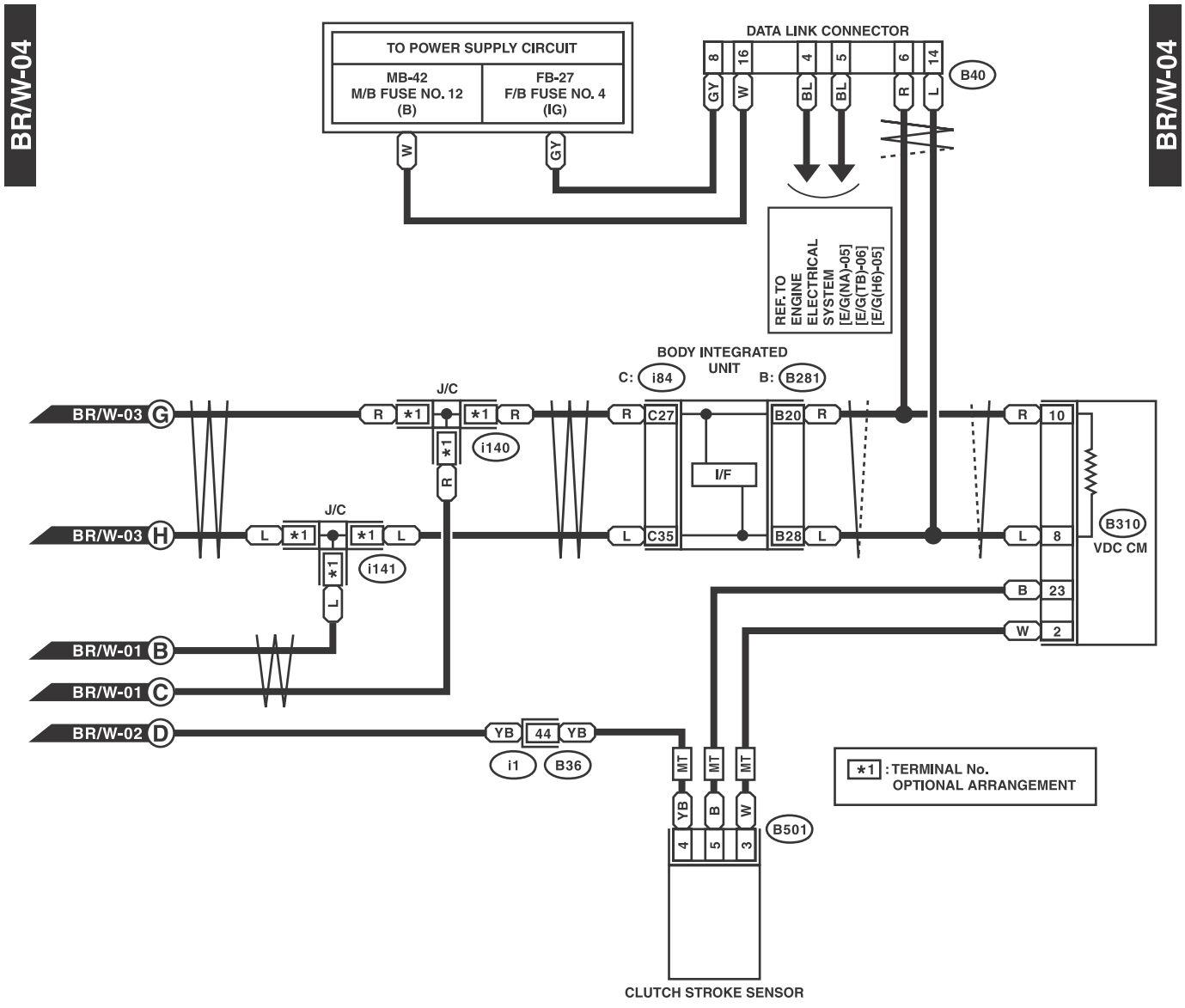
BR/W-04
BR/W-04
TO POWER SUPPLY CIRCUIT
MB-42
M/B FUSE NO. 12
(B)
FB-27
F/B FUSE NO. 4
(IG)
DATA LINK CONNECTOR
B40
REF. TO ENGINE ELECTRICAL SYSTEM [E/G(NA)-05] [E/G(TB)-06] [E/G(H6)-05]
BODY INTEGRATED UNIT
C: i84
B: B281
J/C
i140
i141
I/F
B310
VDC CM
BR/W-03 G
BR/W-03 H
BR/W-01 B
BR/W-01 C
BR/W-02 D
i1
B36
B501
CLUTCH STROKE SENSOR
*1 : TERMINAL No. OPTIONAL ARRANGEMENT

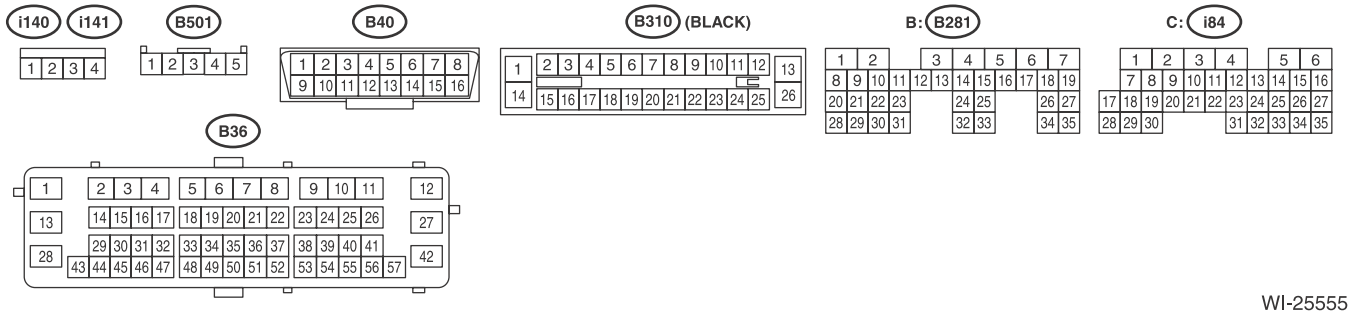
i140
i141
B501
B40
B310 (BLACK)
B: B281
C: i84
B36

WI-25555

33.Power Seat System

A: WIRING DIAGRAM

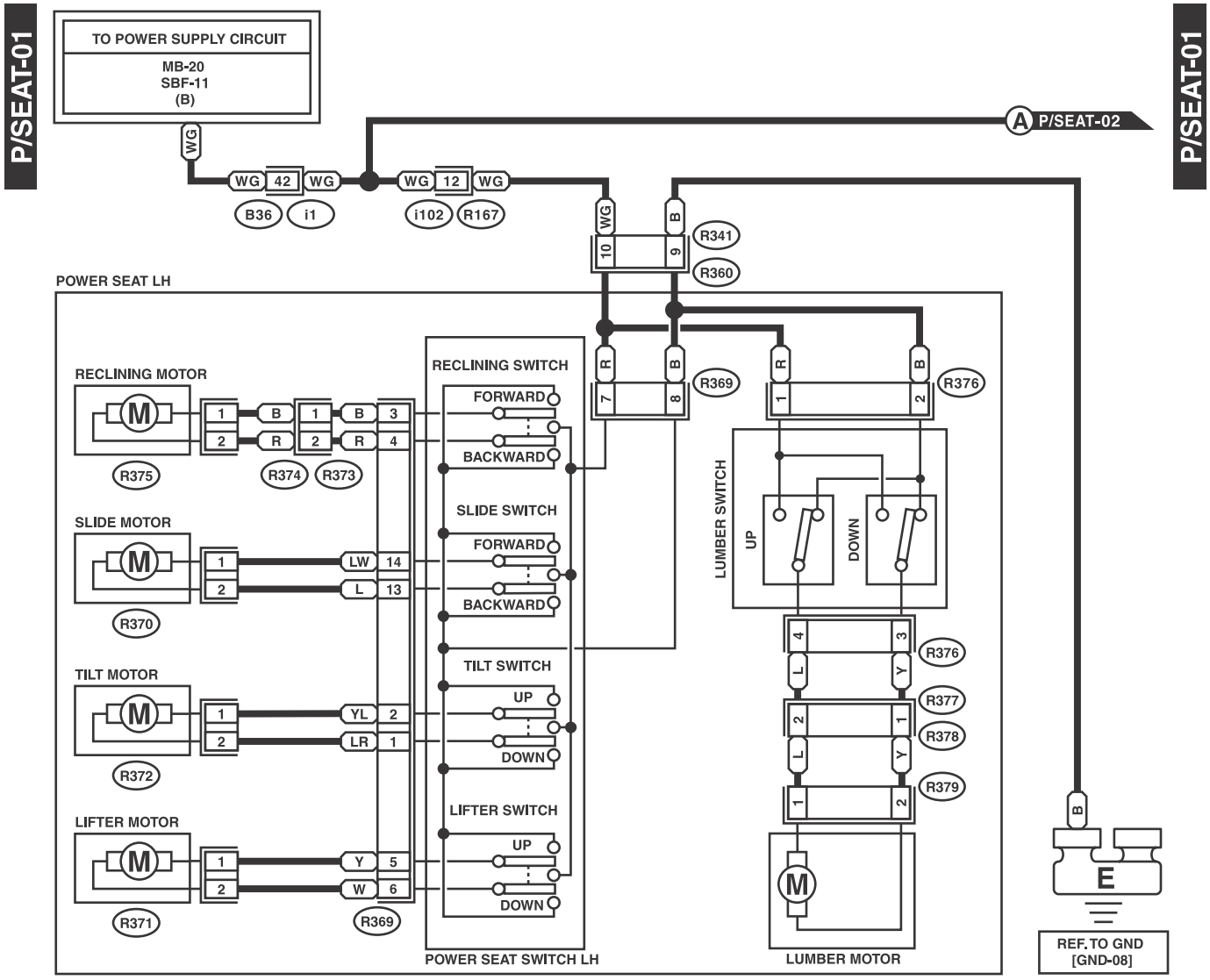

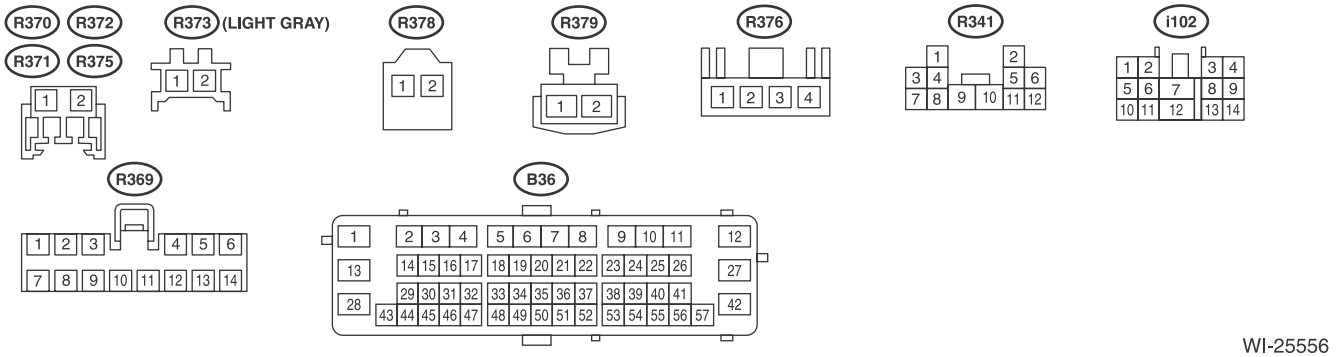

WI-25556

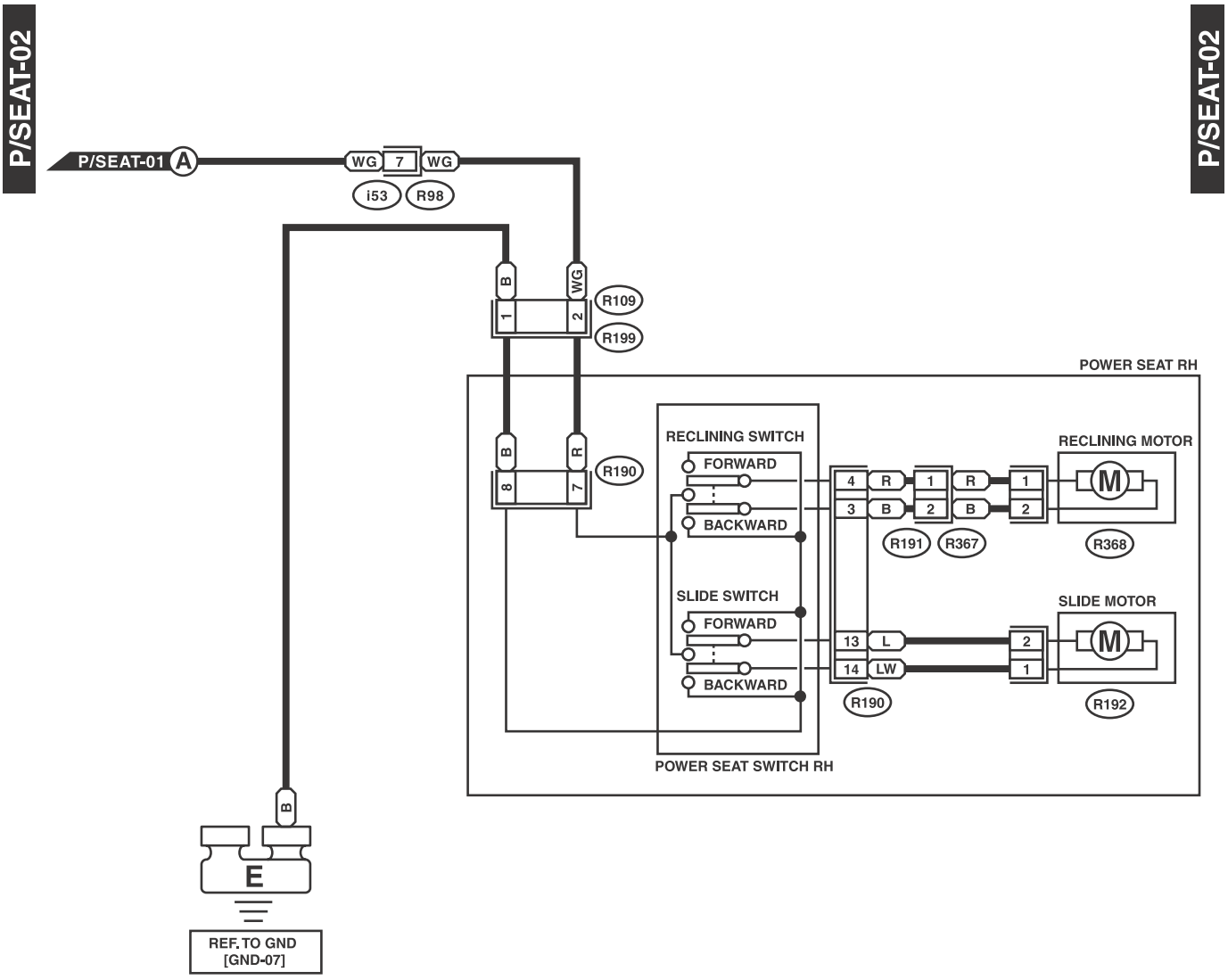
P/SEAT-02
P/SEAT-02
P/SEAT-01 A
WG 7 WG
i53 R98
B WG
1 2
R109
R199
POWER SEAT RH
B R
8 7
R190
RECLINING SWITCH
FORWARD
BACKWARD
RECLINING MOTOR
4 R 1 R 1
3 B 2 B 2
R191 R367
R368
SLIDE SWITCH
FORWARD
BACKWARD
SLIDE MOTOR
13 L 2
14 LW 1
R190
R192
POWER SEAT SWITCH RH
B
E
REF. TO GND
[GND-07]

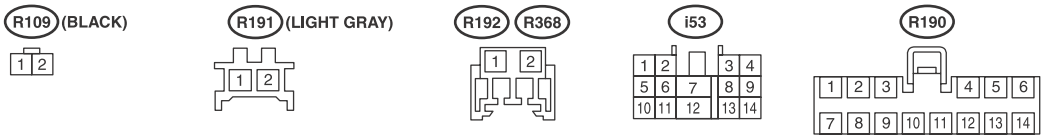
R109 (BLACK)
R191 (LIGHT GRAY)
R192 R368
i53
R190

WI-25557

34.Power Window System

A: WIRING DIAGRAM

1. WITHOUT DRIVER'S SEAT AUTO UP FUNCTION

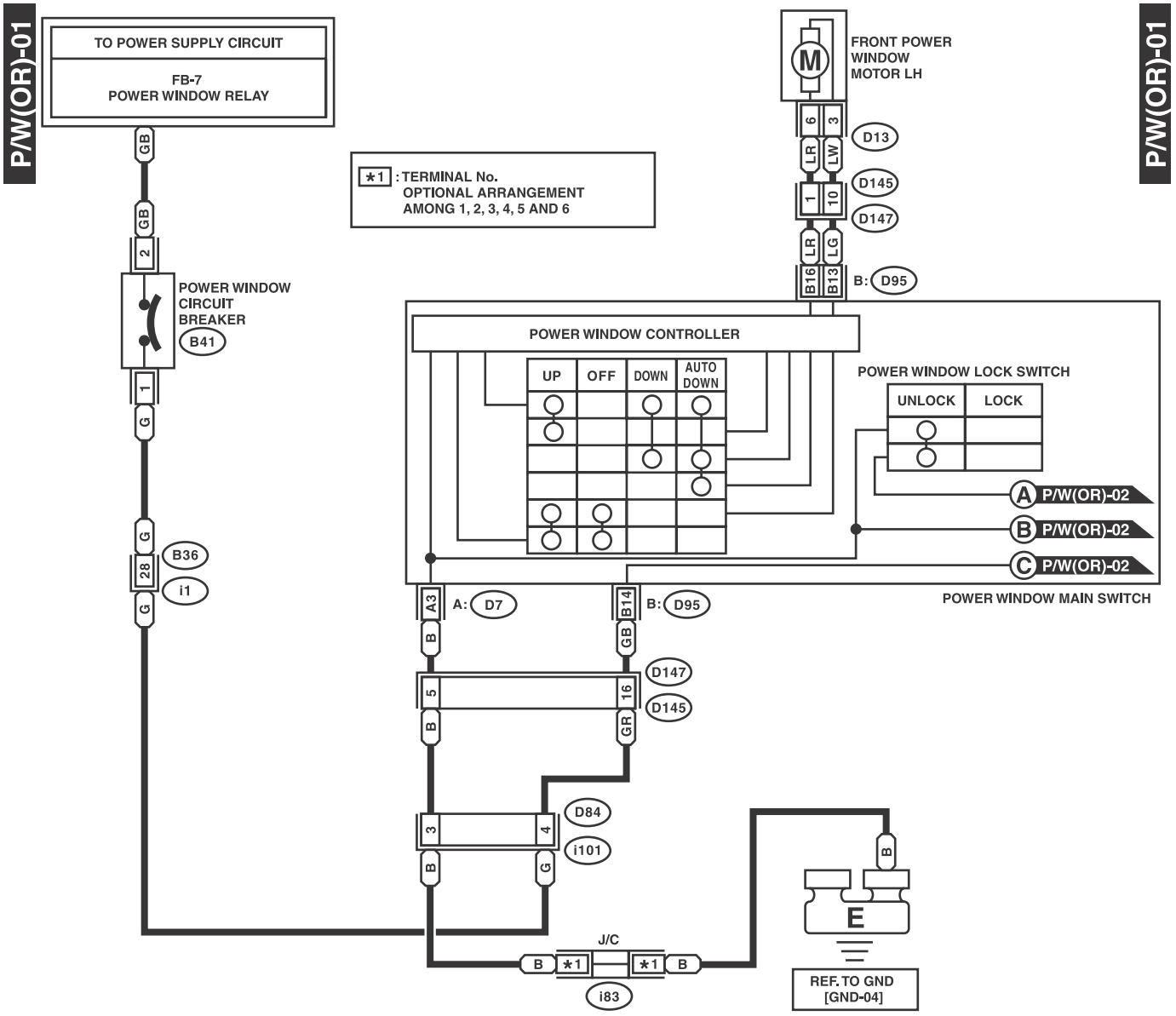

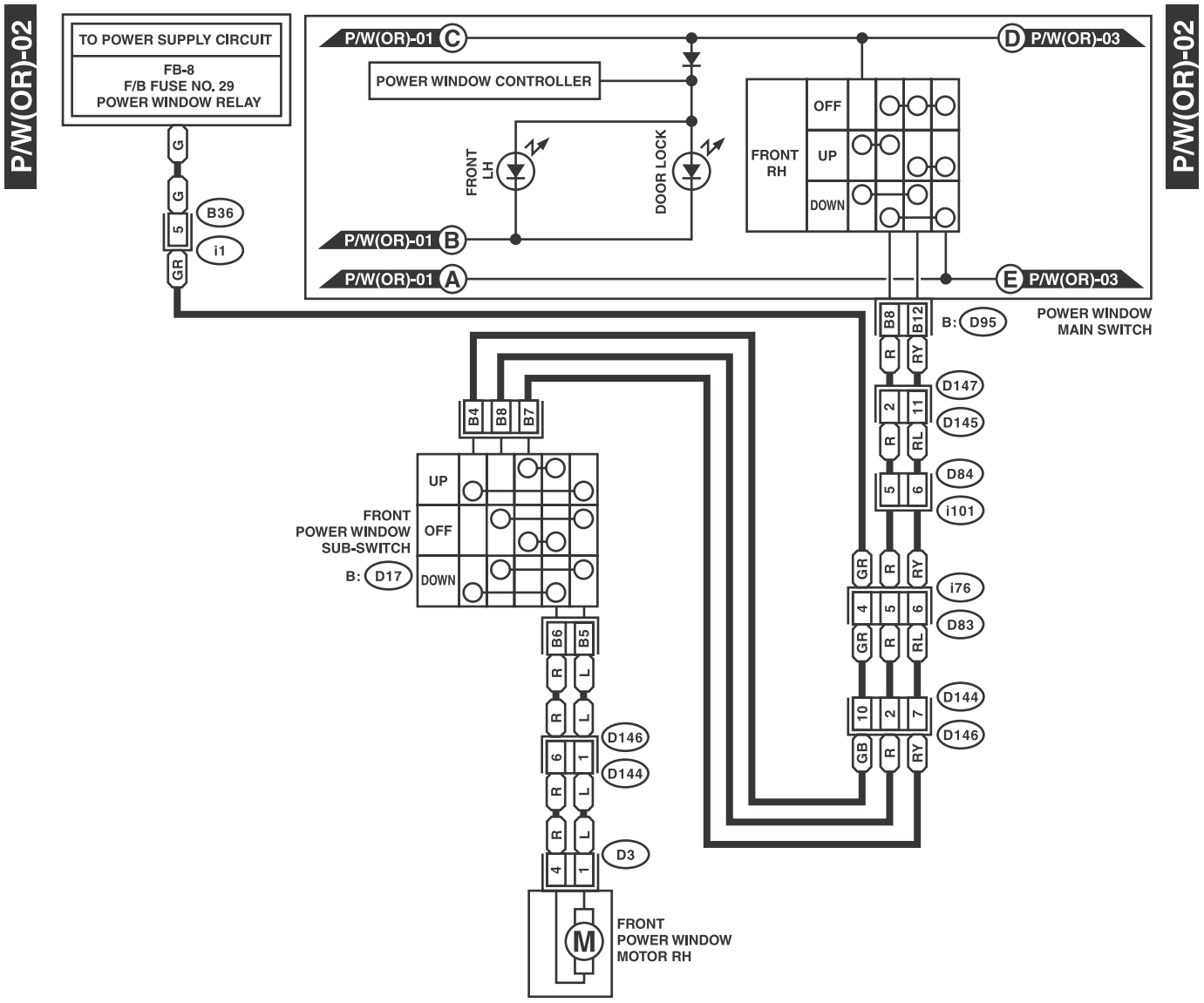
P/W(OR)-02
TO POWER SUPPLY CIRCUIT
FB-8
F/B FUSE NO. 29
POWER WINDOW RELAY
G
G
5
GR
B36
i1
P/W(OR)-01 C
POWER WINDOW CONTROLLER
FRONT LH
DOOR LOCK
FRONT RH
OFF
UP
DOWN
P/W(OR)-01 B
P/W(OR)-01 A
D P/W(OR)-03
E P/W(OR)-03
P/W(OR)-02
B: D95
POWER WINDOW MAIN SWITCH
B8
B12
R
RY
D147
2
11
D145
R
RL
D84
5
6
i101
GR
R
RY
i76
4
5
6
D83
GR
R
RL
D144
10
2
7
D146
GB
R
RY
B4
B8
B7
UP
OFF
DOWN
FRONT POWER WINDOW SUB-SWITCH
B: D17
B6
B5
R
L
R
L
D146
6
1
D144
R
L
R
L
D3
4
1
M
FRONT POWER WINDOW MOTOR RH

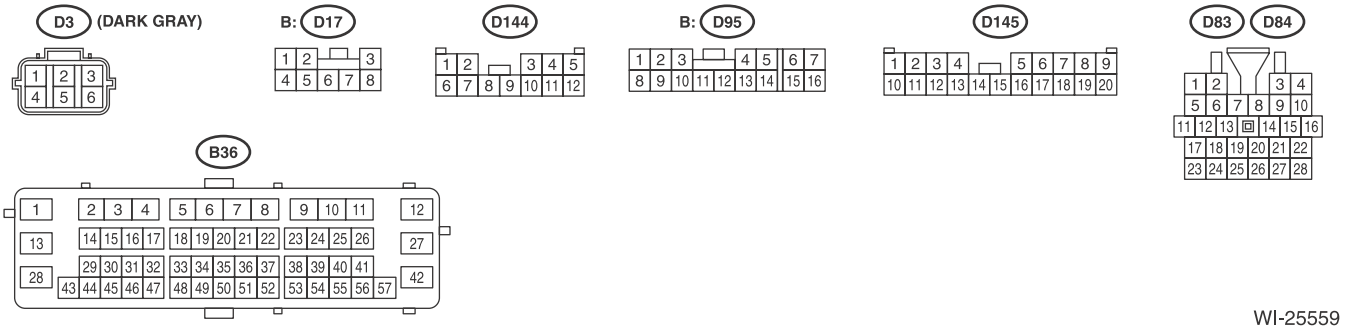
D3 (DARK GRAY)
B: D17
D144
B: D95
D145
D83
D84
B36

WI-25559

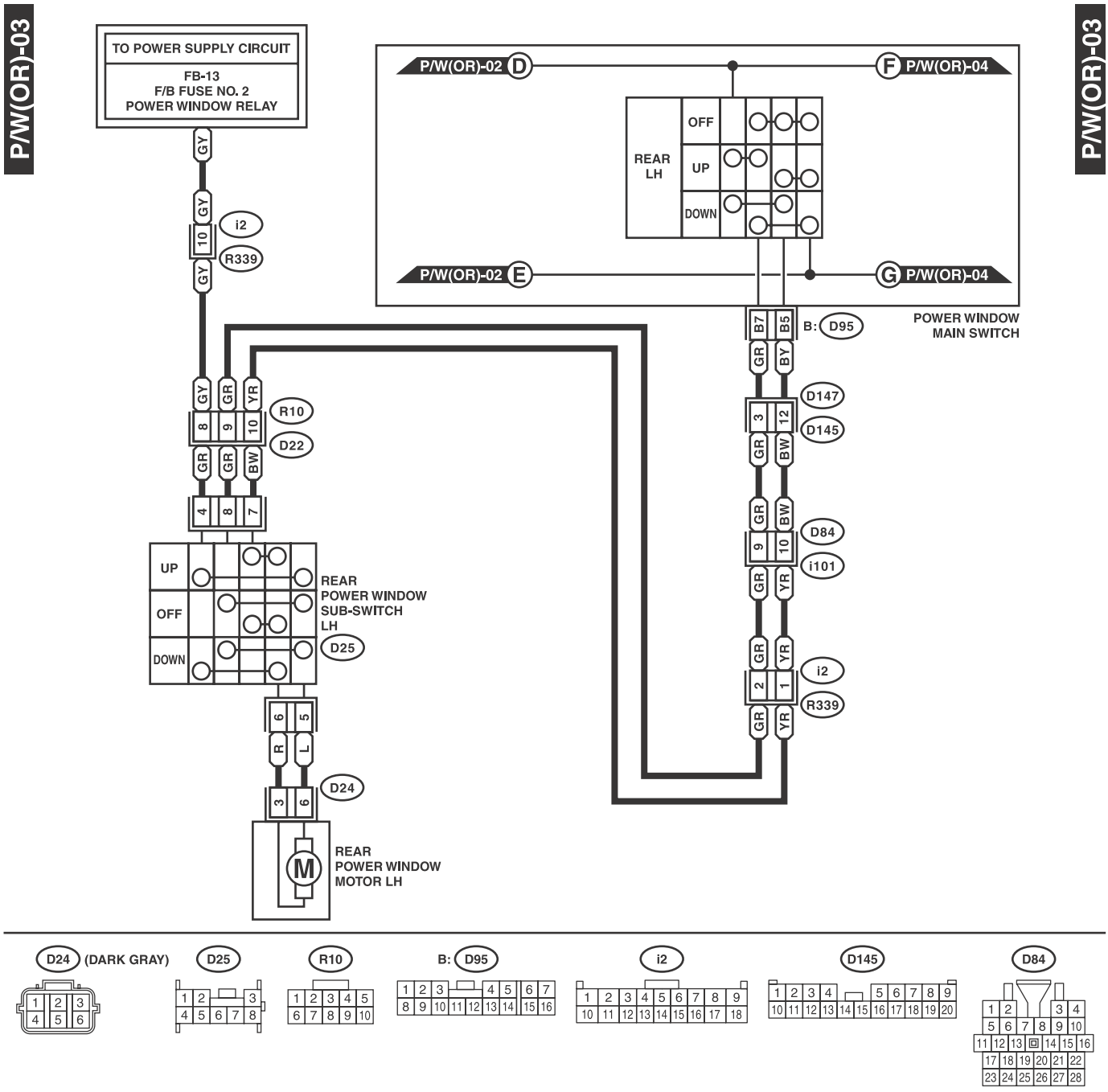
P/W(OR)-03
P/W(OR)-03
TO POWER SUPPLY CIRCUIT
FB-13
F/B FUSE NO. 2
POWER WINDOW RELAY
P/W(OR)-02 D
F P/W(OR)-04
REAR LH
OFF
UP
DOWN
P/W(OR)-02 E
G P/W(OR)-04
POWER WINDOW MAIN SWITCH
B: D95
D147
D145
D84
i101
i2
R339
R10
D22
REAR POWER WINDOW SUB-SWITCH LH
D25
D24
REAR POWER WINDOW MOTOR LH
M
D24 (DARK GRAY)
D25
R10
B: D95
i2
D145
D84

WI-25560

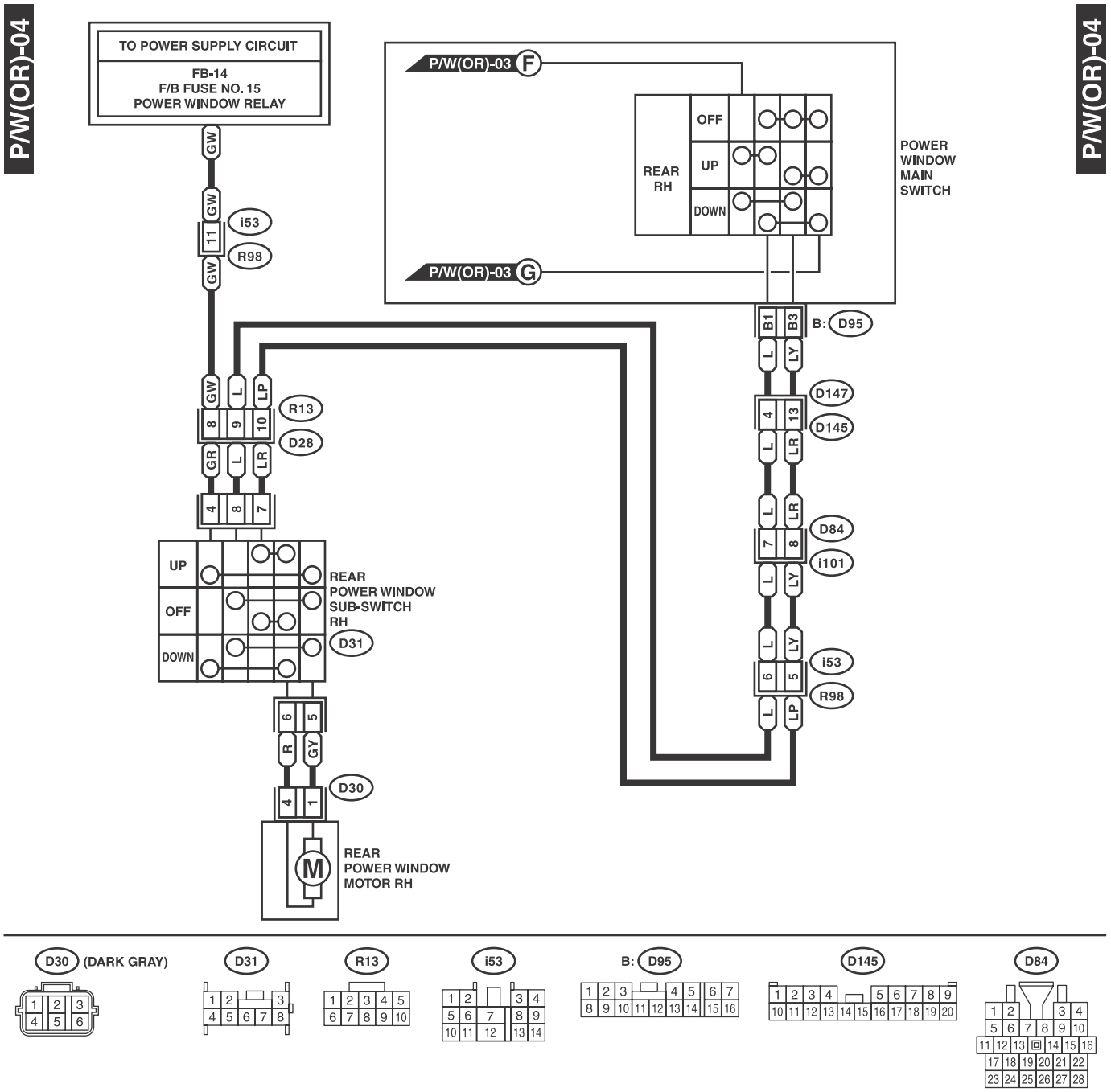
P/W(OR)-04
P/W(OR)-04
TO POWER SUPPLY CIRCUIT
FB-14
F/B FUSE NO. 15
POWER WINDOW RELAY
P/W(OR)-03 F
P/W(OR)-03 G
REAR RH
OFF
UP
DOWN
POWER WINDOW MAIN SWITCH
B: D95
D147
D145
D84
i101
i53
R98
R13
D28
D31
D30
REAR POWER WINDOW SUB-SWITCH RH
REAR POWER WINDOW MOTOR RH
D30 (DARK GRAY)
D31
R13
i53
B: D95
D145
D84

WI-25561

2. WITH DRIVER'S SEAT AUTO UP FUNCTION

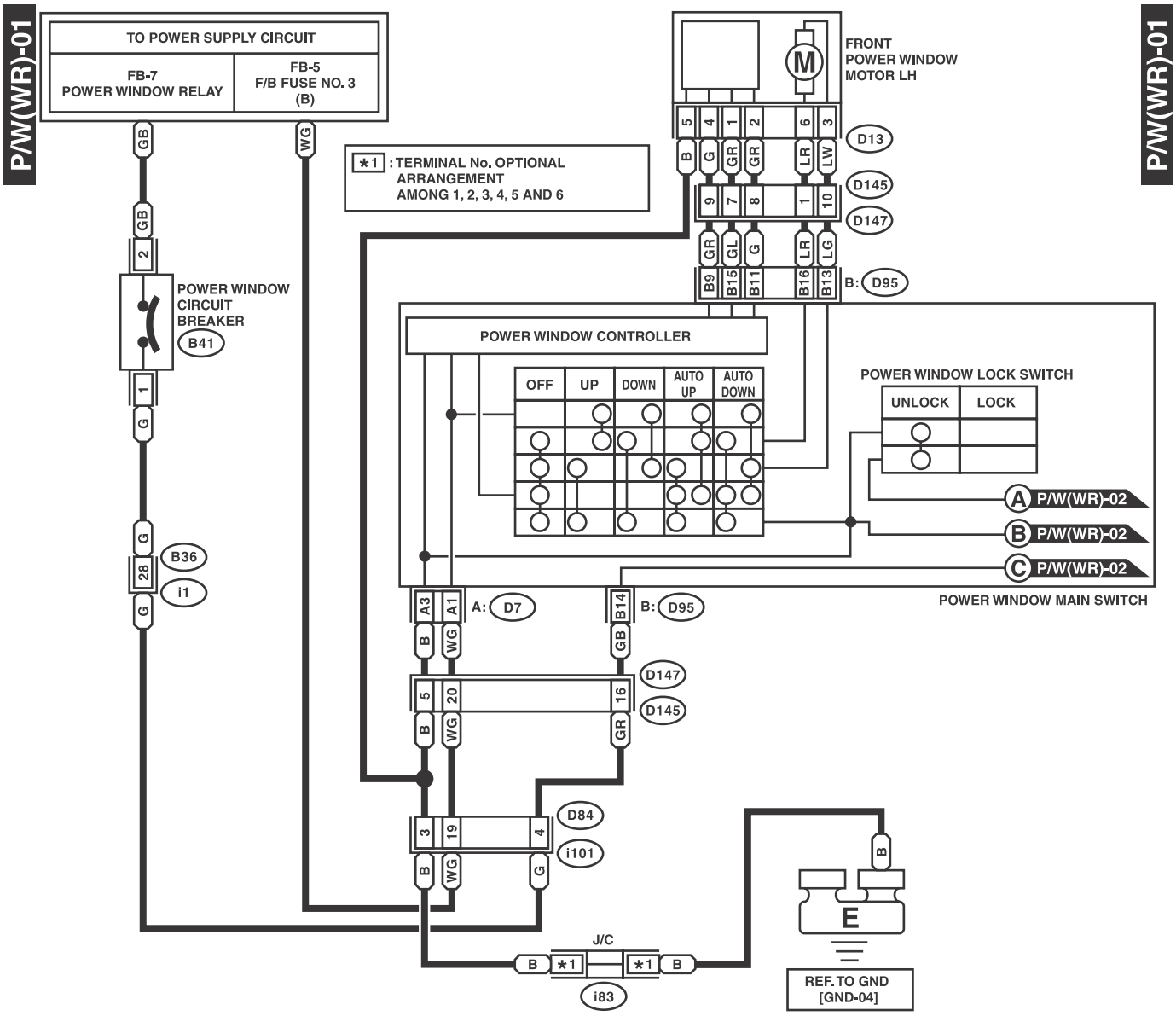

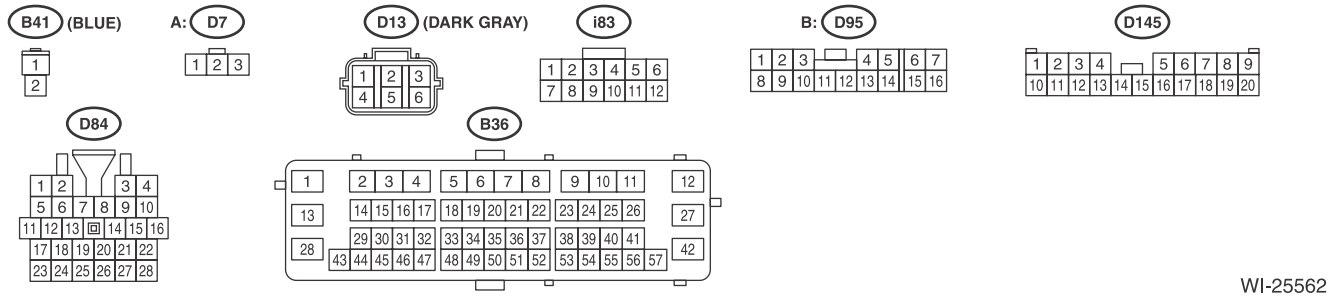

WI-25562

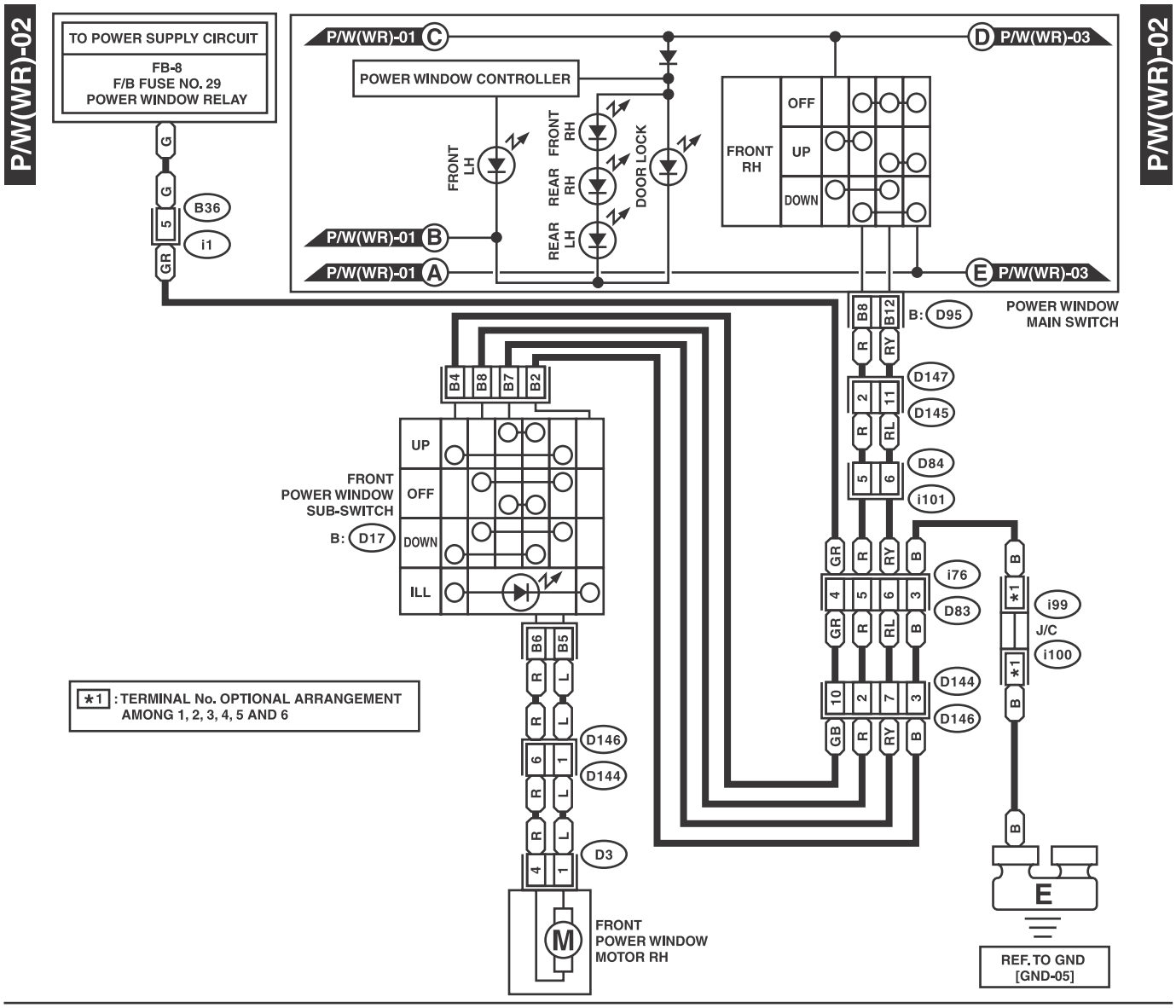
P/W(WR)-02
TO POWER SUPPLY CIRCUIT
FB-8
F/B FUSE NO. 29
POWER WINDOW RELAY
G
G
5
GR
B36
i1
P/W(WR)-01 C
P/W(WR)-01 B
P/W(WR)-01 A
D P/W(WR)-03
E P/W(WR)-03
POWER WINDOW CONTROLLER
FRONT LH
FRONT RH
REAR RH
REAR LH
DOOR LOCK
FRONT RH
OFF
UP
DOWN
B: D95
POWER WINDOW MAIN SWITCH
B8
B12
R
RY
D147
D145
2
11
R
RL
D84
i101
5
6
B4
B8
B7
B2
FRONT POWER WINDOW SUB-SWITCH
B: D17
UP
OFF
DOWN
ILL
GR
R
RY
B
i76
D83
4
5
6
3
GR
R
RL
B
10
2
7
3
GB
R
RY
B
*1
i99
J/C
i100
D144
D146
B6
B5
R
L
R
L
6
1
R
L
4
1
D146
D144
D3
M
FRONT POWER WINDOW MOTOR RH
E
REF. TO GND [GND-05]
*1 : TERMINAL No. OPTIONAL ARRANGEMENT AMONG 1, 2, 3, 4, 5 AND 6
D3 (DARK GRAY)
B: D17
D144
i99
i100
B: D95
D145
D83
D84
B36
WI-25563

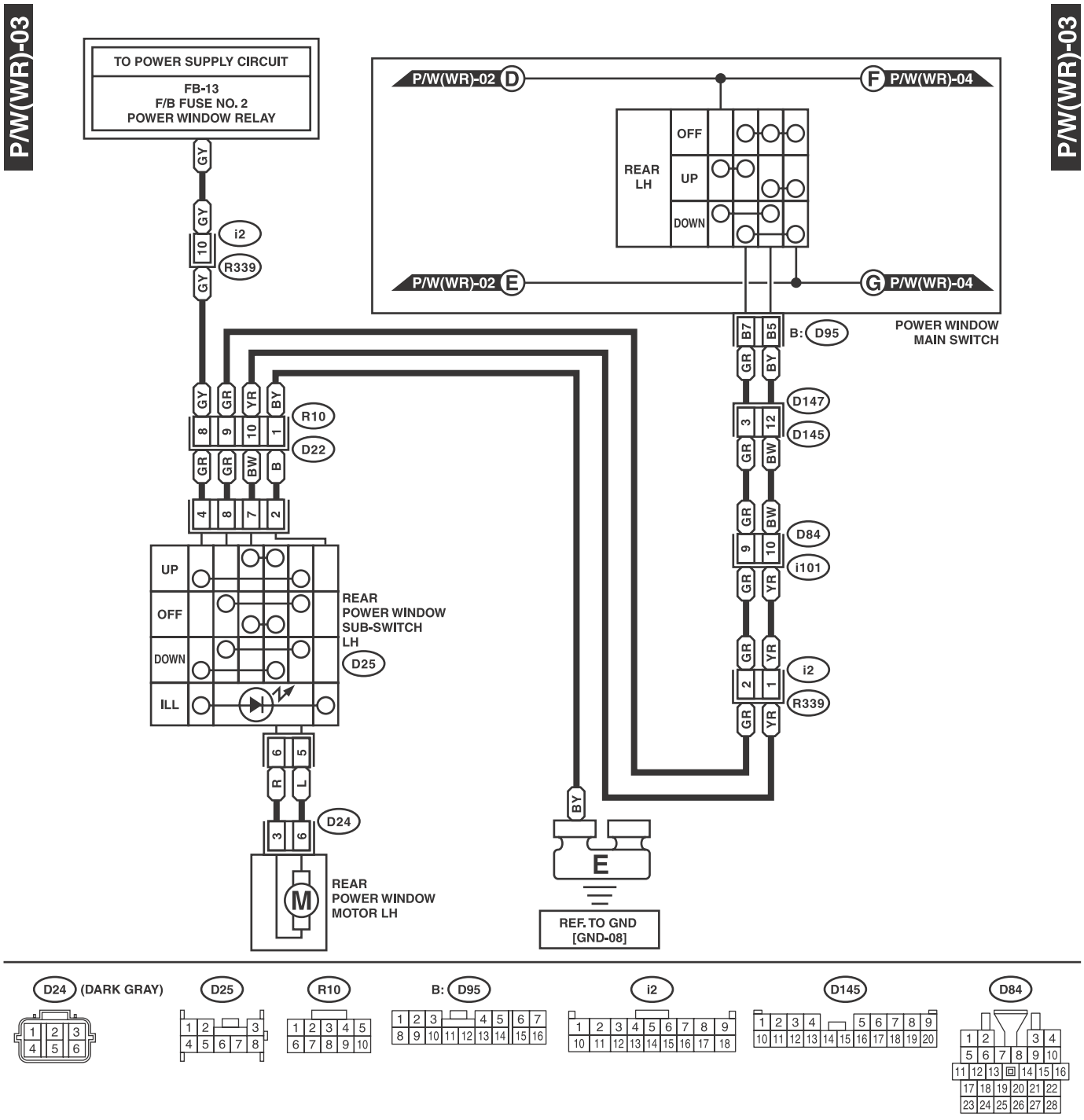
P/W(WR)-03
P/W(WR)-03
TO POWER SUPPLY CIRCUIT
FB-13
F/B FUSE NO. 2
POWER WINDOW RELAY
P/W(WR)-02 D
F P/W(WR)-04
REAR LH
OFF
UP
DOWN
P/W(WR)-02 E
G P/W(WR)-04
POWER WINDOW MAIN SWITCH
B: D95
D147
D145
D84
i101
i2
R339
R10
D22
REAR POWER WINDOW SUB-SWITCH LH
D25
D24
REAR POWER WINDOW MOTOR LH
REF. TO GND [GND-08]
D24 (DARK GRAY)
D25
R10
B: D95
i2
D145
D84

WI-25564

P/W(WR)-04

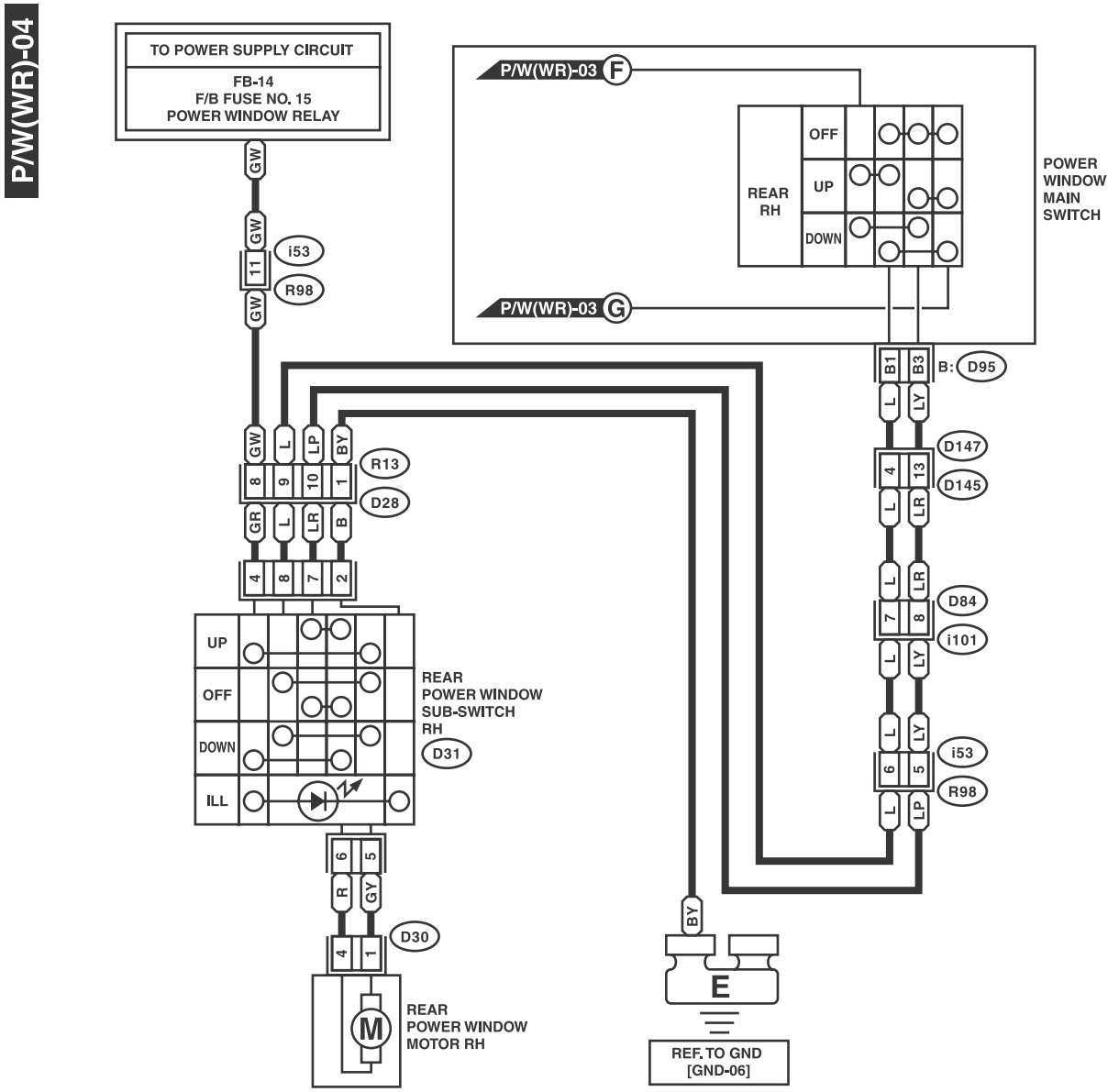

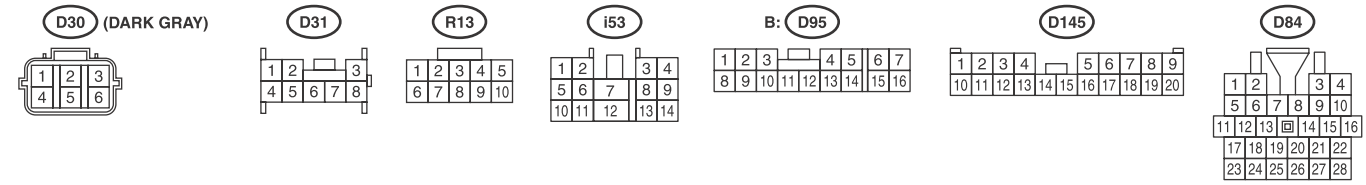

WI-25565

35.Radiator Fan System

A: WIRING DIAGRAM

1. 2.5 L NON-TURBO MODEL

R/F(NA)-01

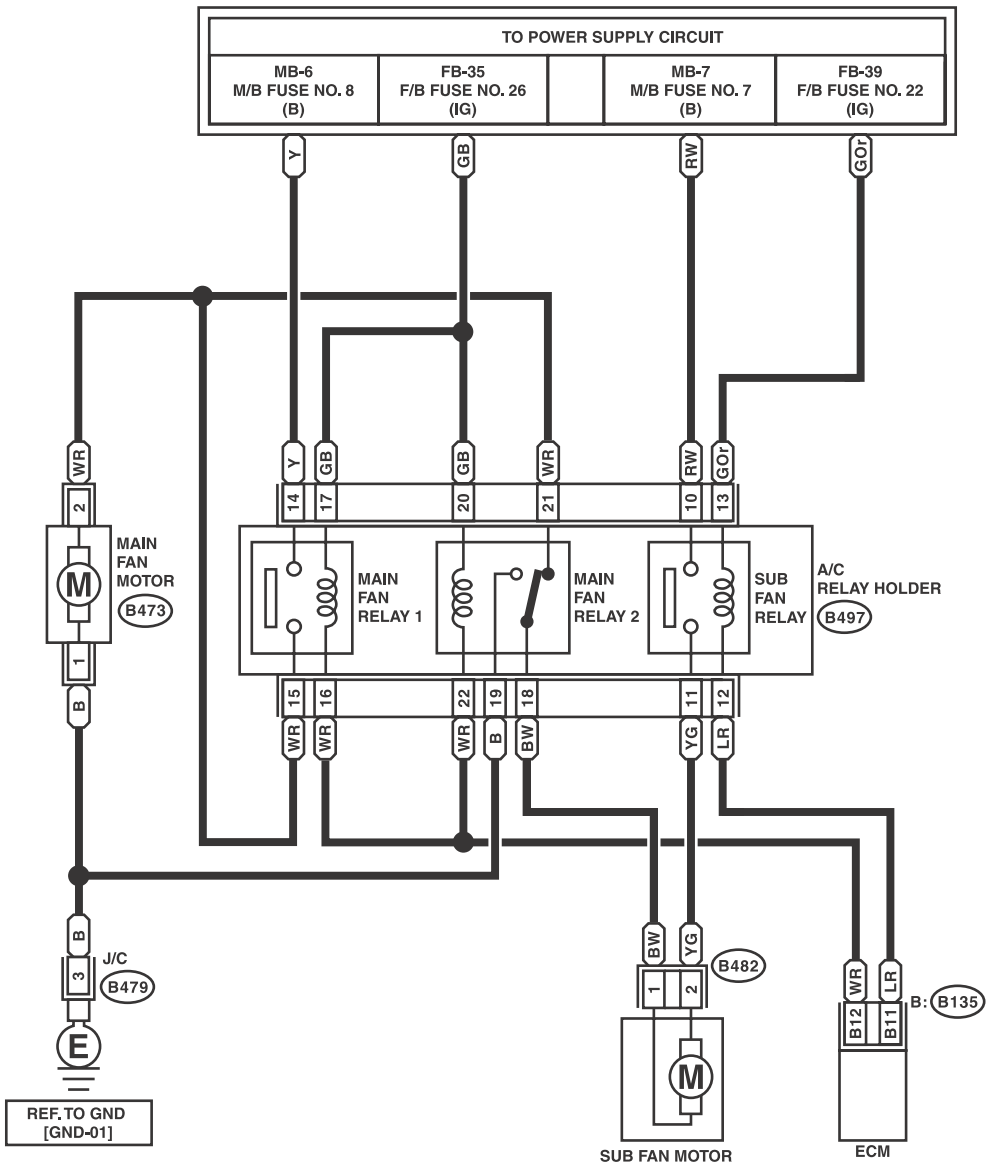

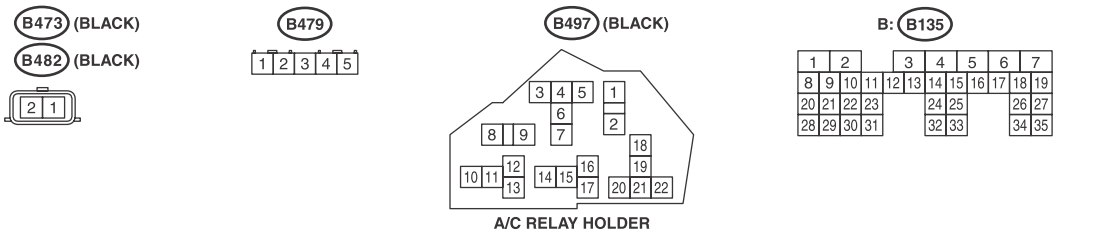

WI-25566

R/F(NA)-01

2. 2.5 L TURBO MODEL

R/F(TB)-01

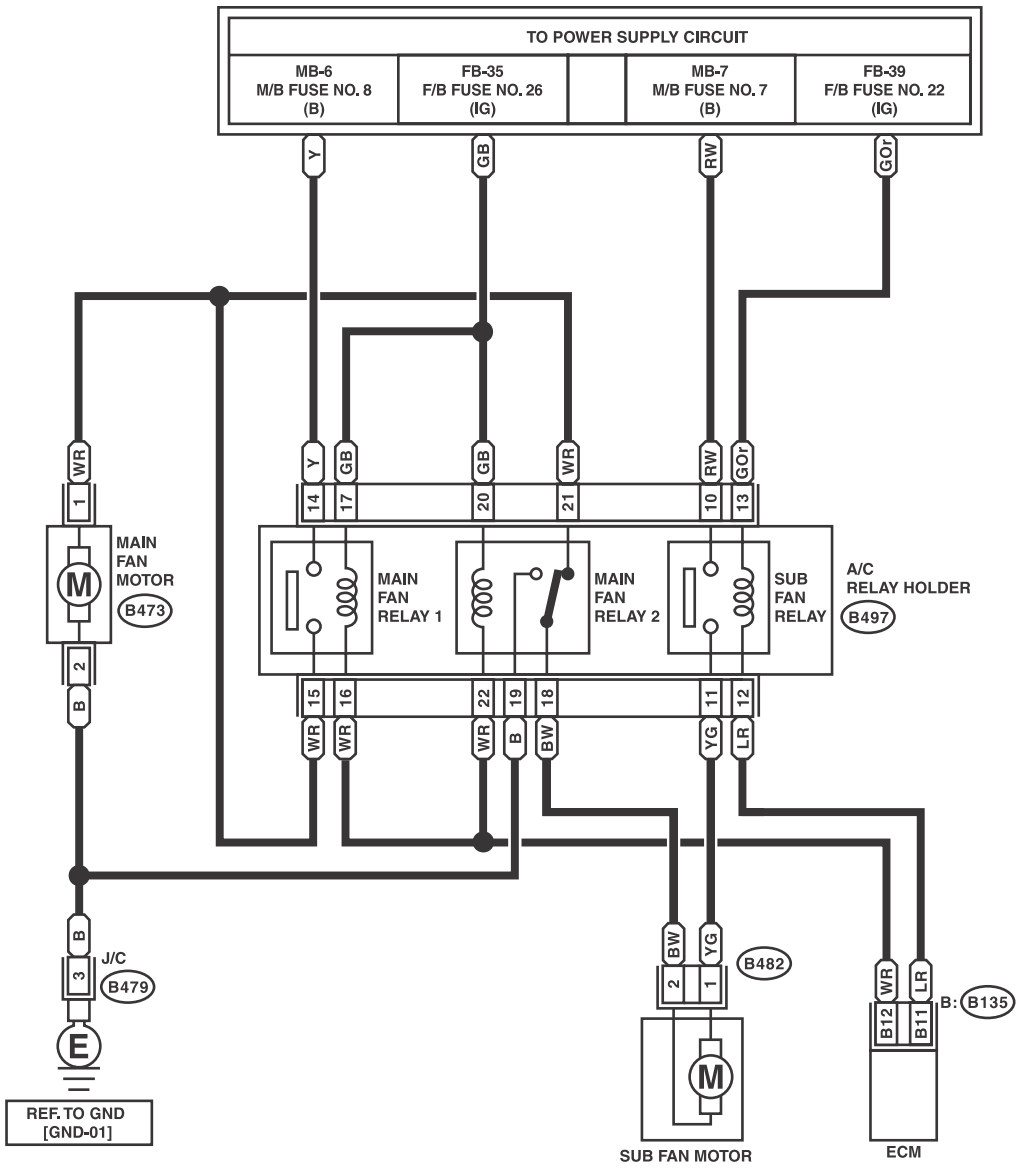

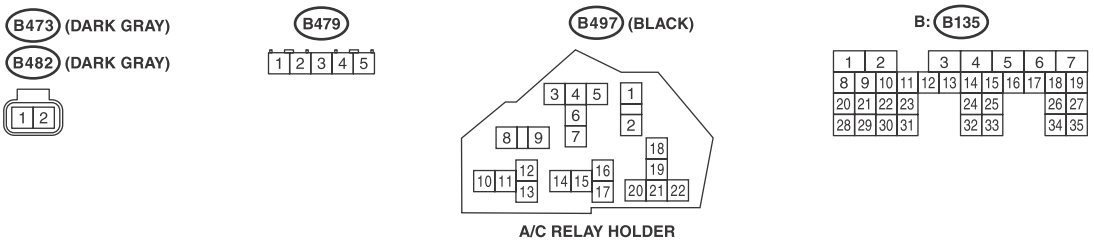

WI-25567

3. 3.6 L MODEL

R/F(H6)-01

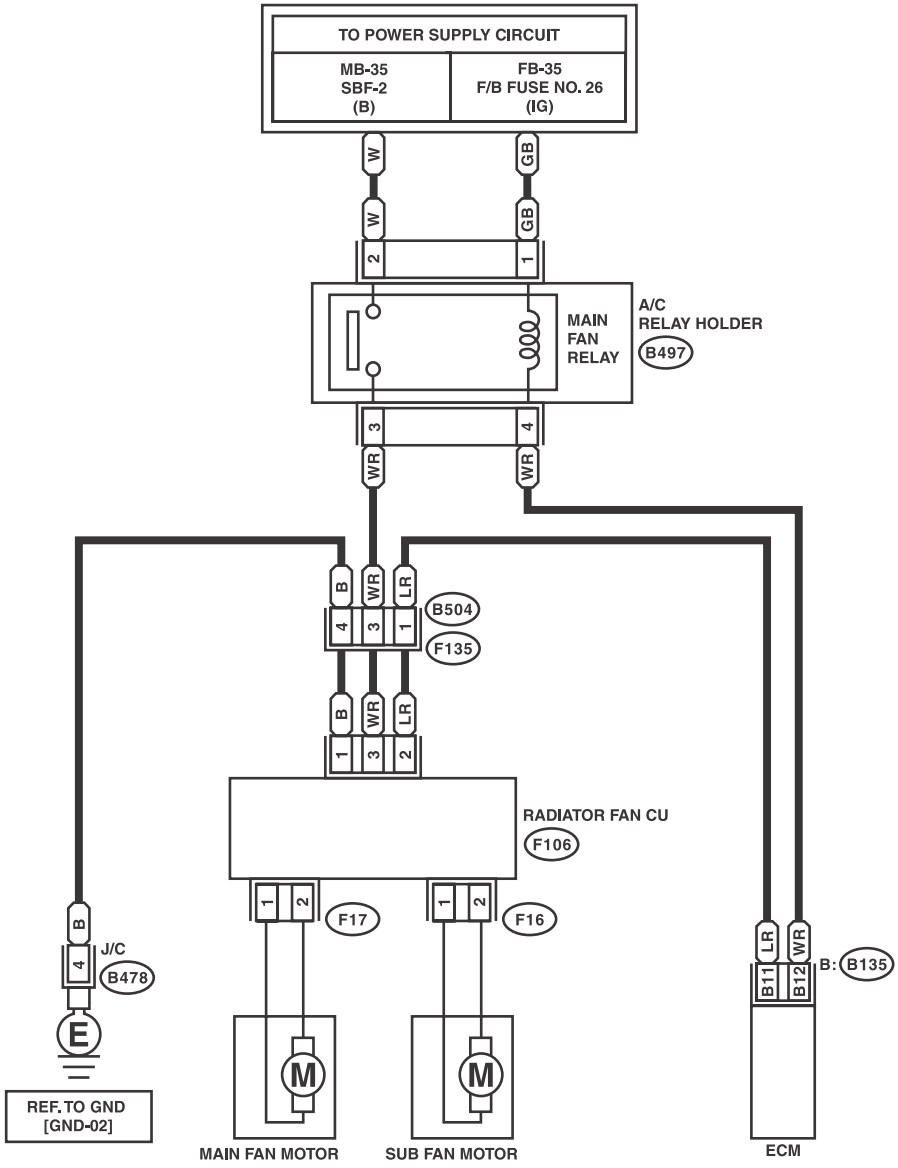

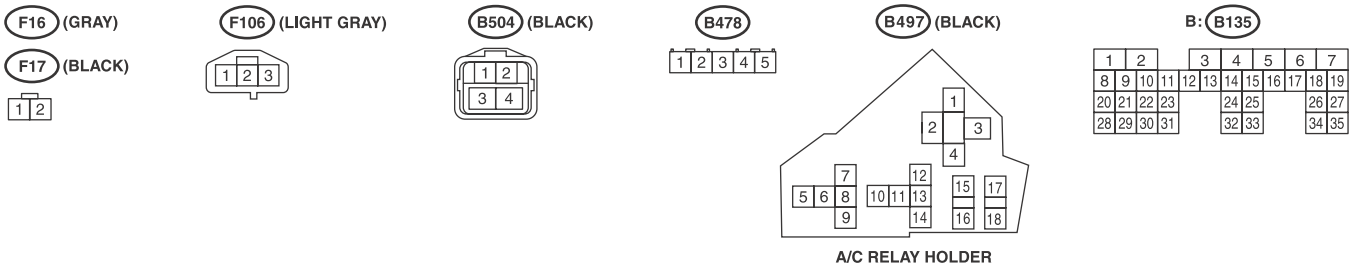

WI-25568

36.Rear Accessory Power Supply Socket System

A: WIRING DIAGRAM

RAPS-01

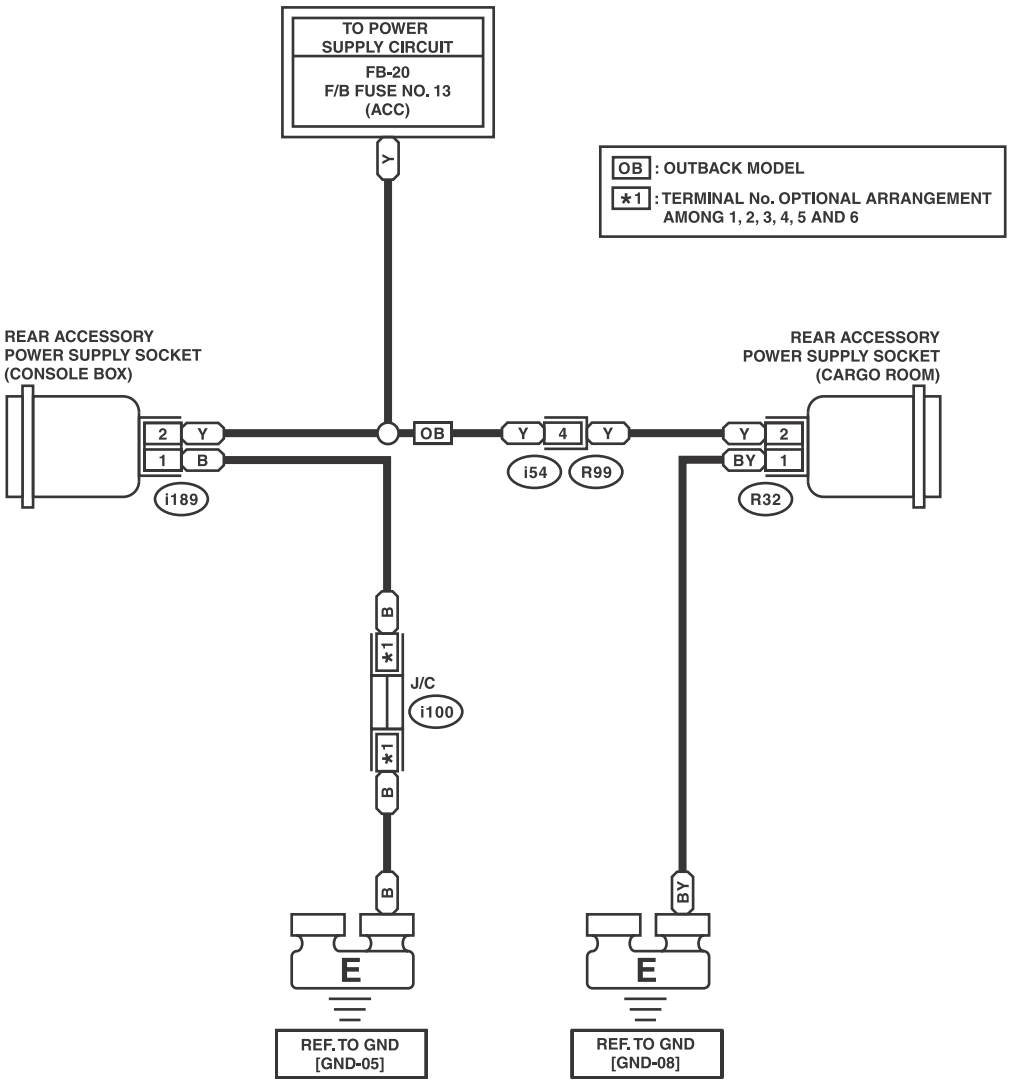

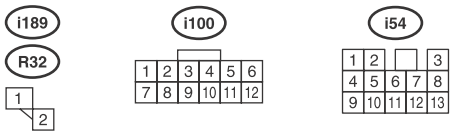

WI-25569

37.Rear Defogger System

A: WIRING DIAGRAM

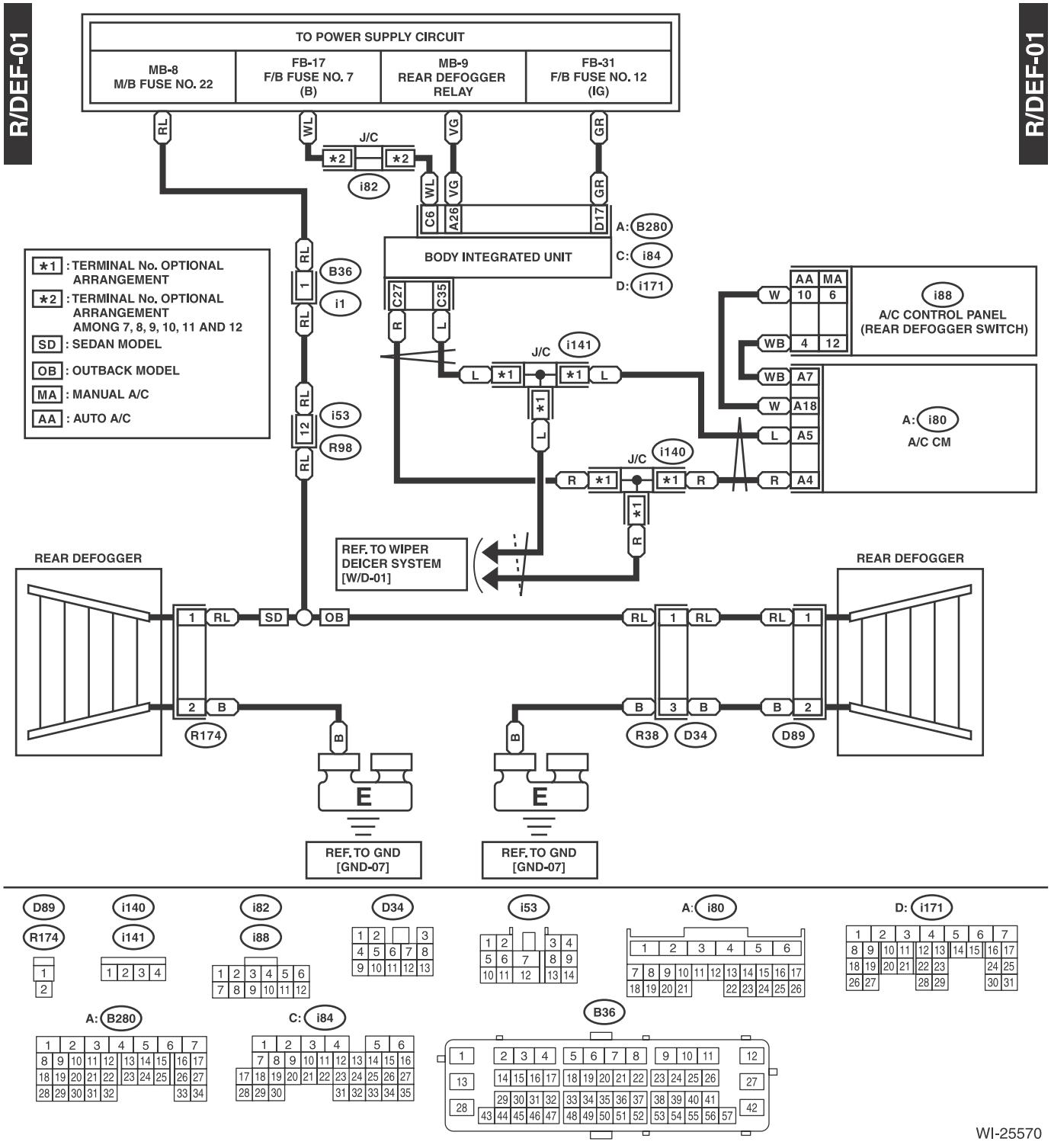

38.Rearview Camera System

A: WIRING DIAGRAM

1. SEDAN MODEL

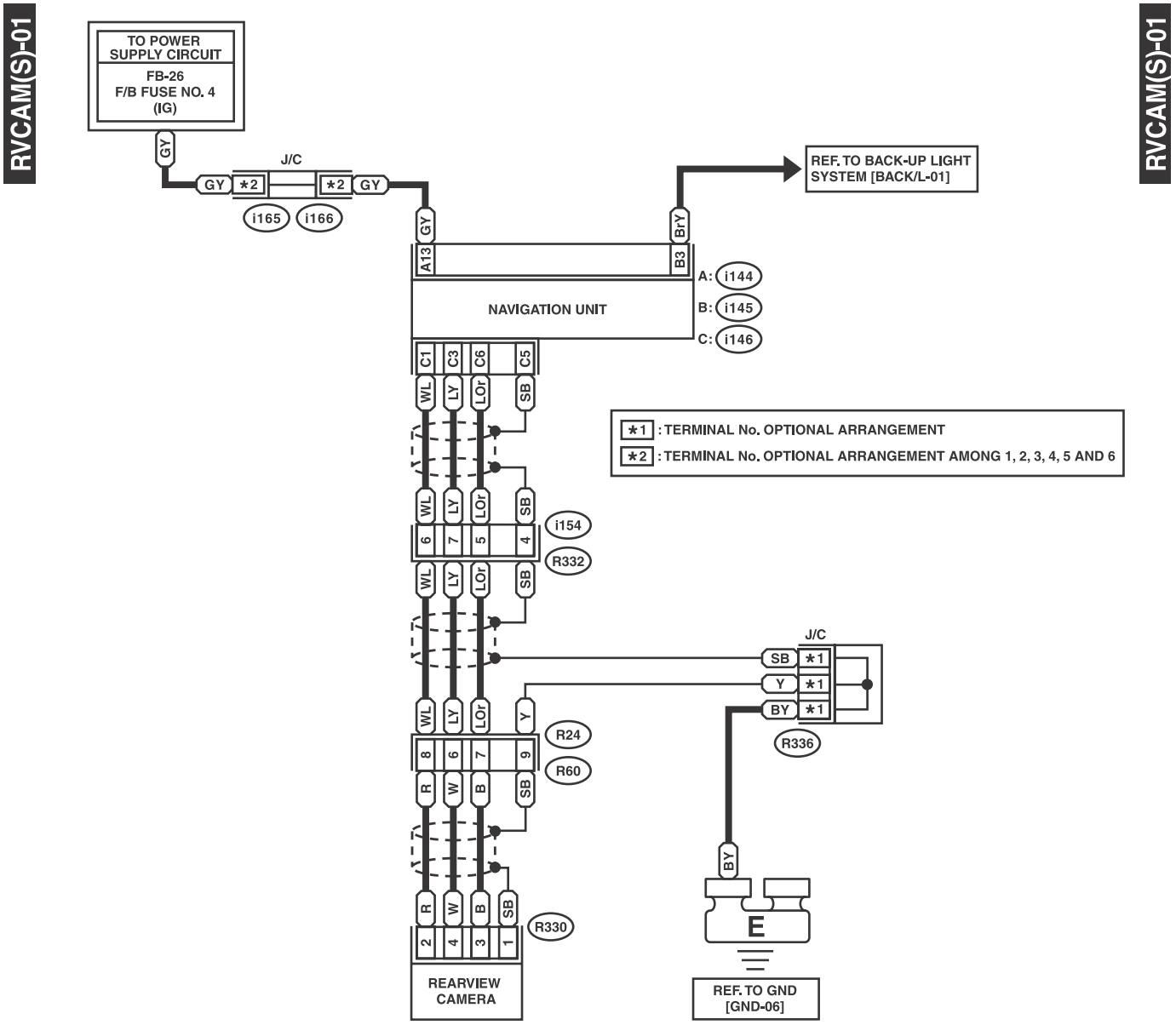

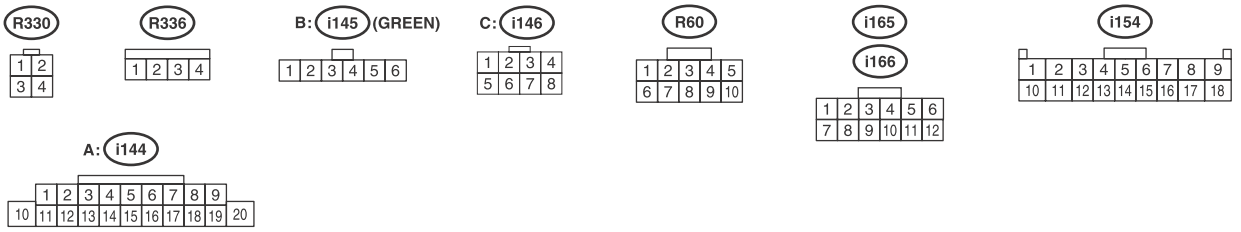

WI-25571

2. OUTBACK MODEL

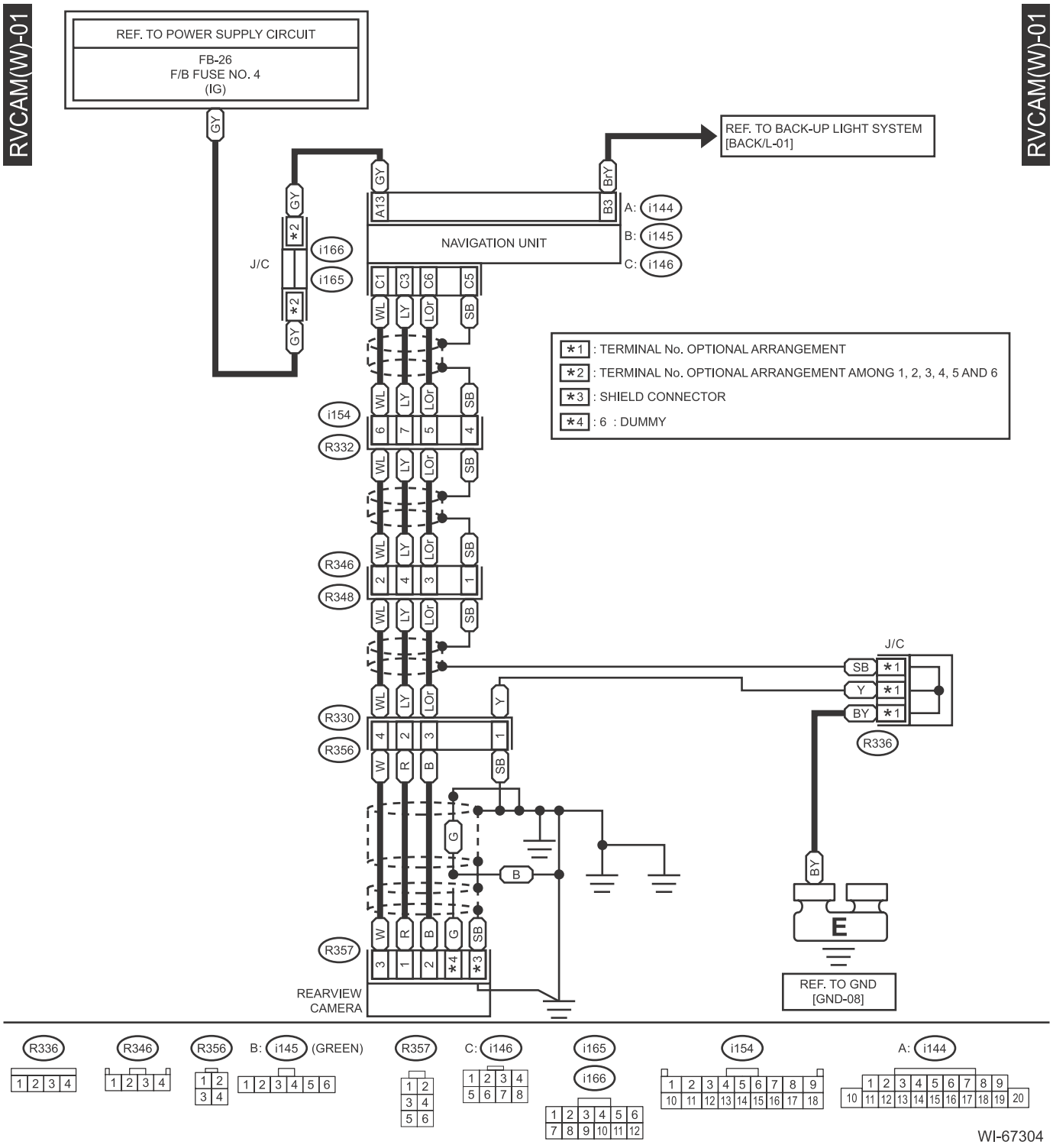

39.Rearview Mirror System

A: WIRING DIAGRAM

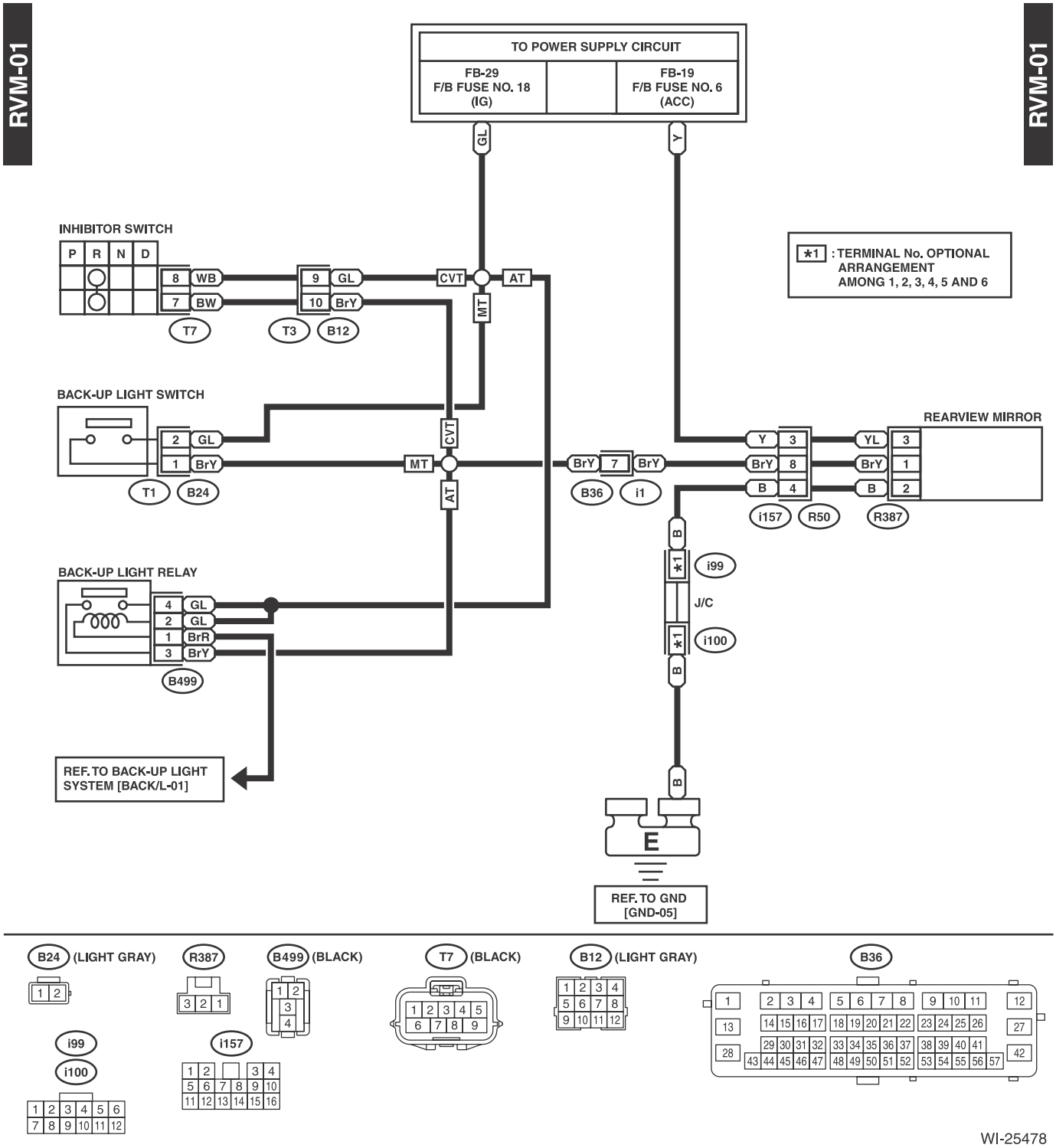

WI-25478

40.Rear Wiper and Washer System

A: WIRING DIAGRAM

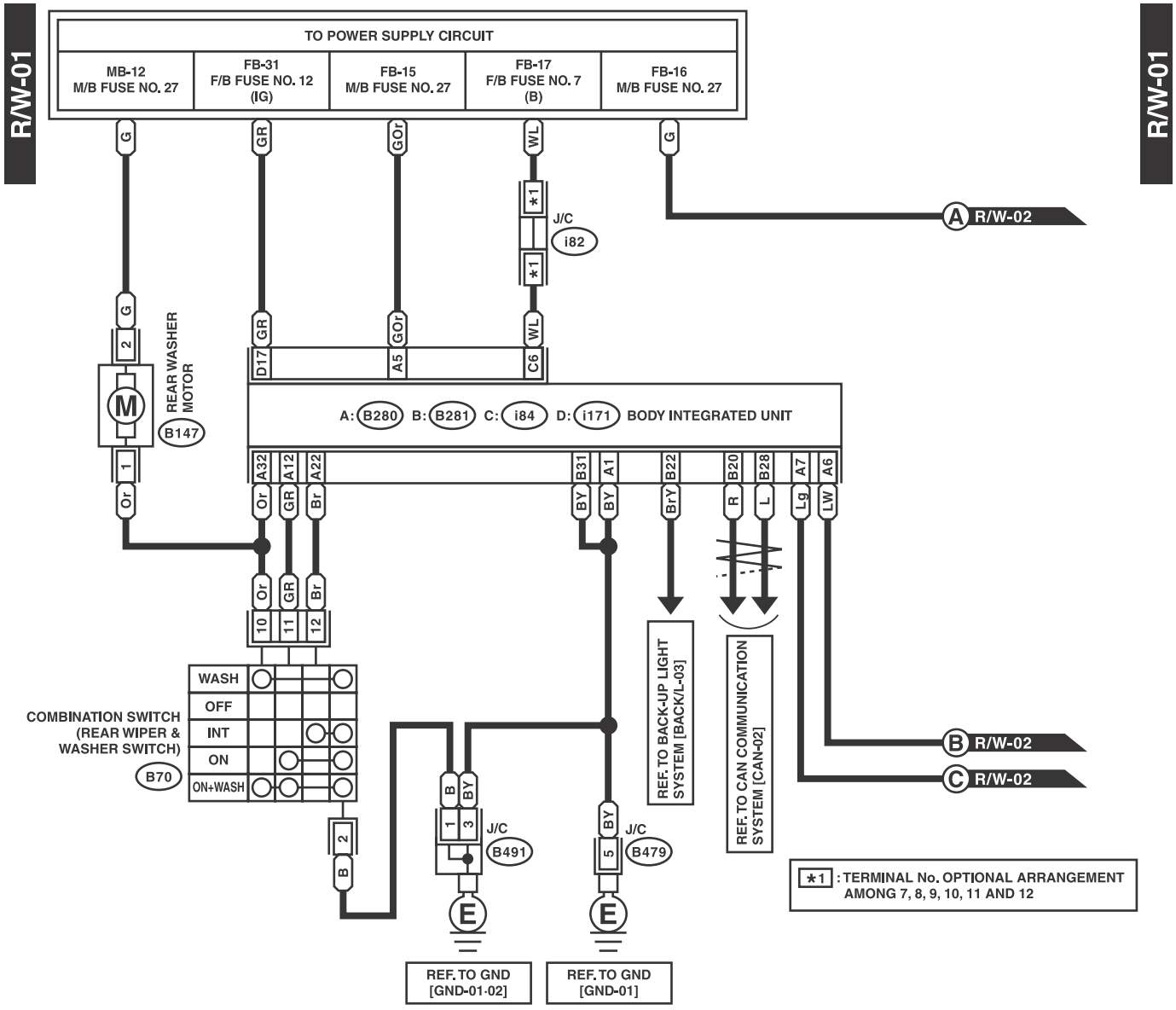

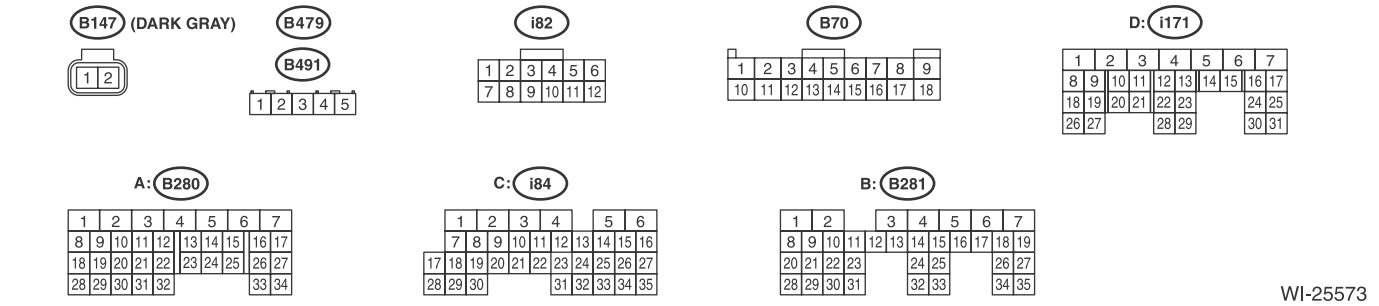

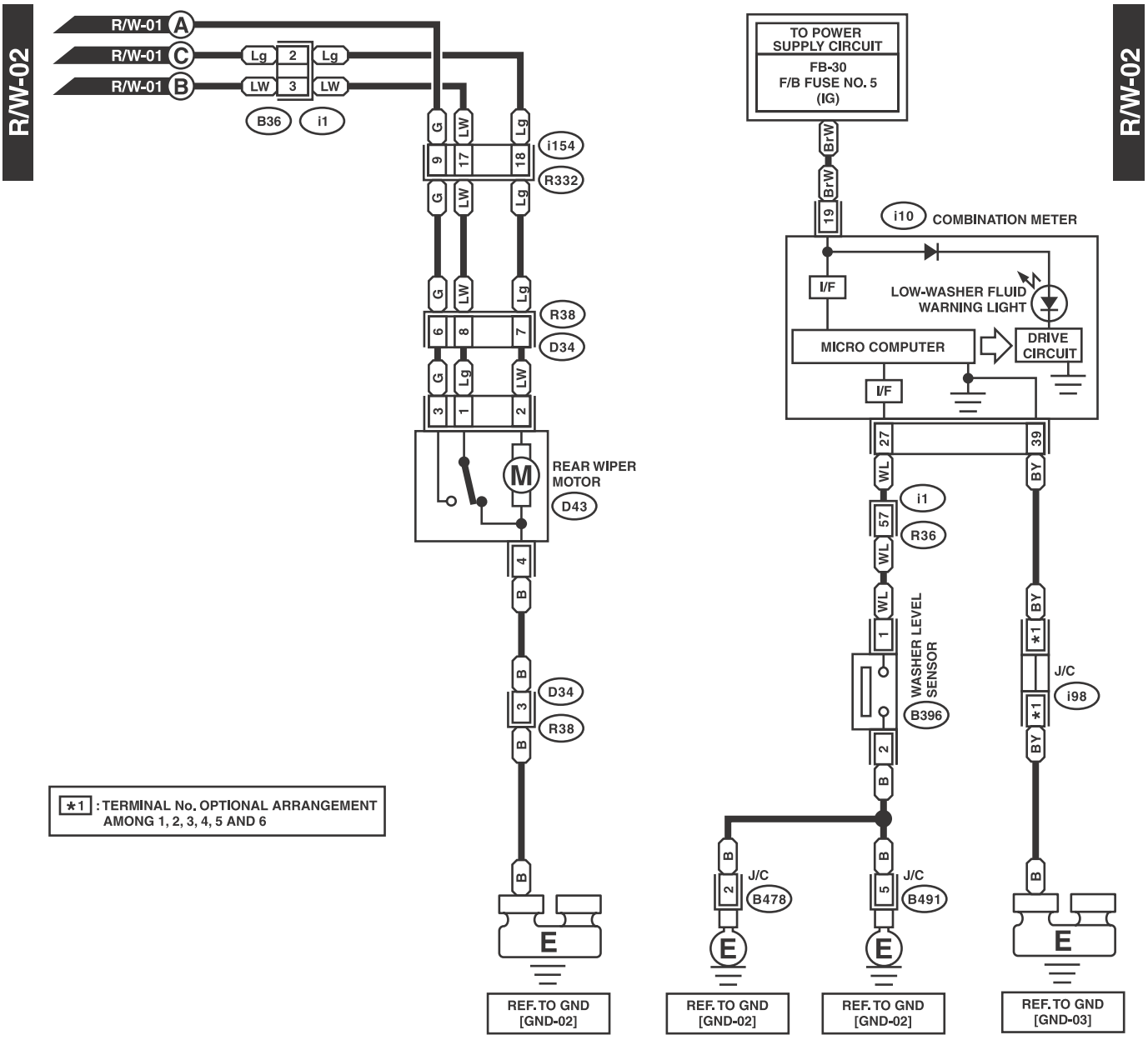
R/W-02
R/W-01 A
R/W-01 C
R/W-01 B
Lg
LW
2
3
B36
i1
i154
R332
R38
D34
REAR WIPER MOTOR
D43
TO POWER SUPPLY CIRCUIT
FB-30
F/B FUSE NO. 5
(IG)
BrW
i10 COMBINATION METER
I/F
LOW-WASHER FLUID WARNING LIGHT
MICRO COMPUTER
DRIVE CIRCUIT
WL
BY
WASHER LEVEL SENSOR
B396
J/C
i98
B478
B491
E
REF. TO GND [GND-02]
REF. TO GND [GND-03]
*1 : TERMINAL No. OPTIONAL ARRANGEMENT AMONG 1, 2, 3, 4, 5 AND 6

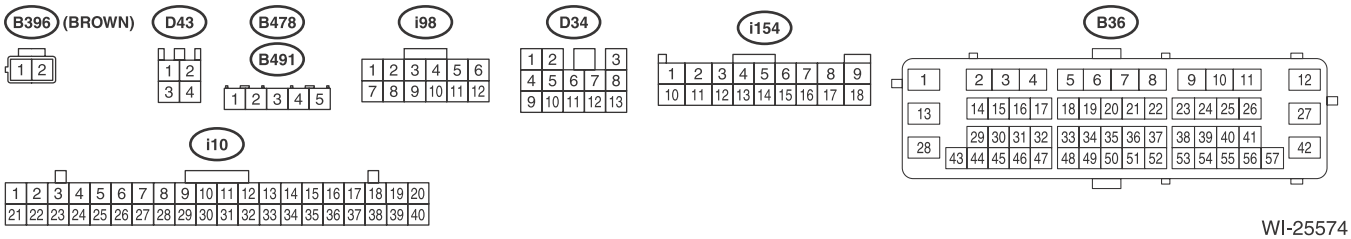
B396 (BROWN)
D43
B478
B491
i98
D34
i154
B36
i10

WI-25574

41.Remote Control Mirror System

A: WIRING DIAGRAM

1. WITHOUT RETRACTABLE MIRROR

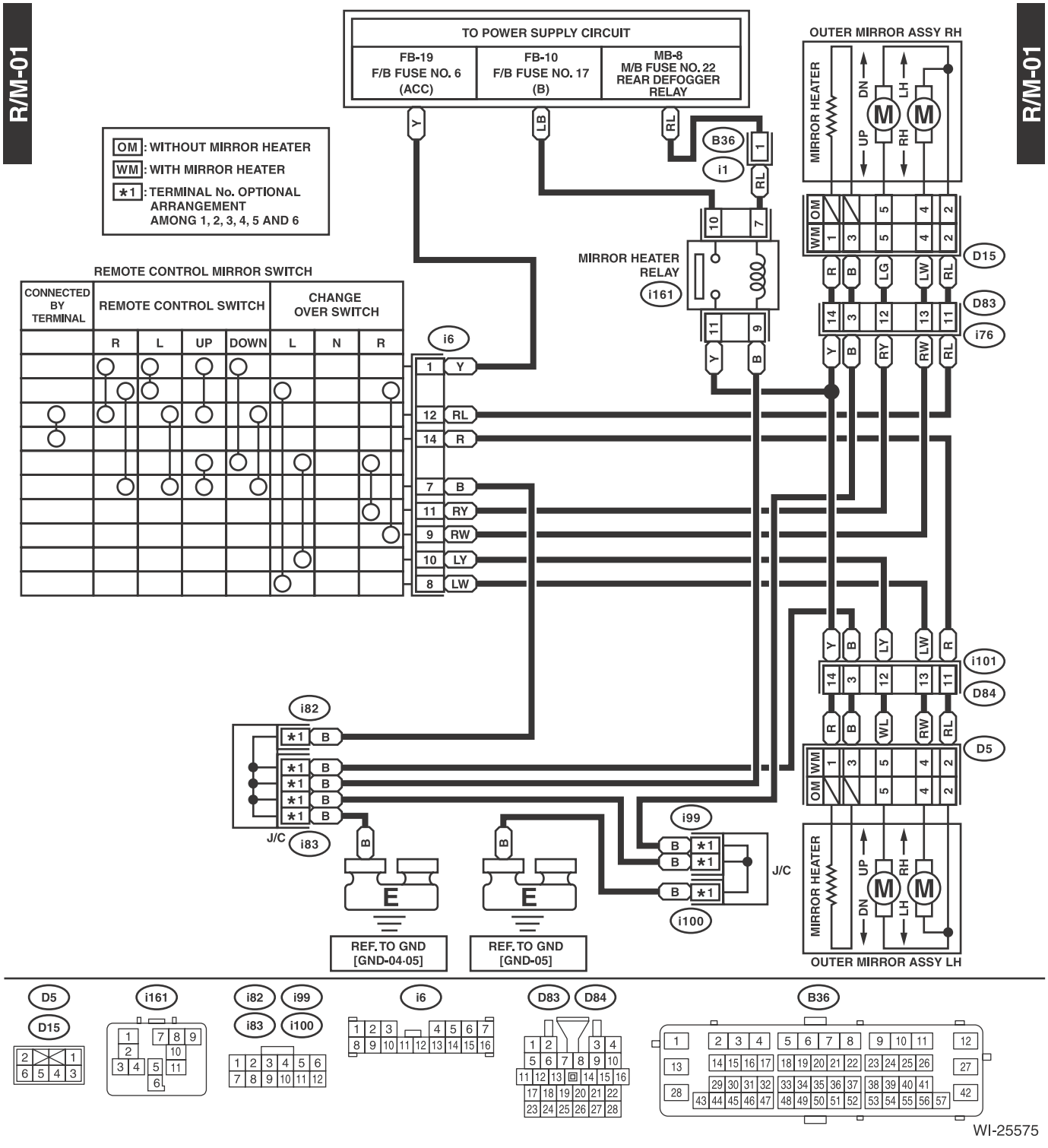

WI-25575

2. WITH RETRACTABLE MIRROR

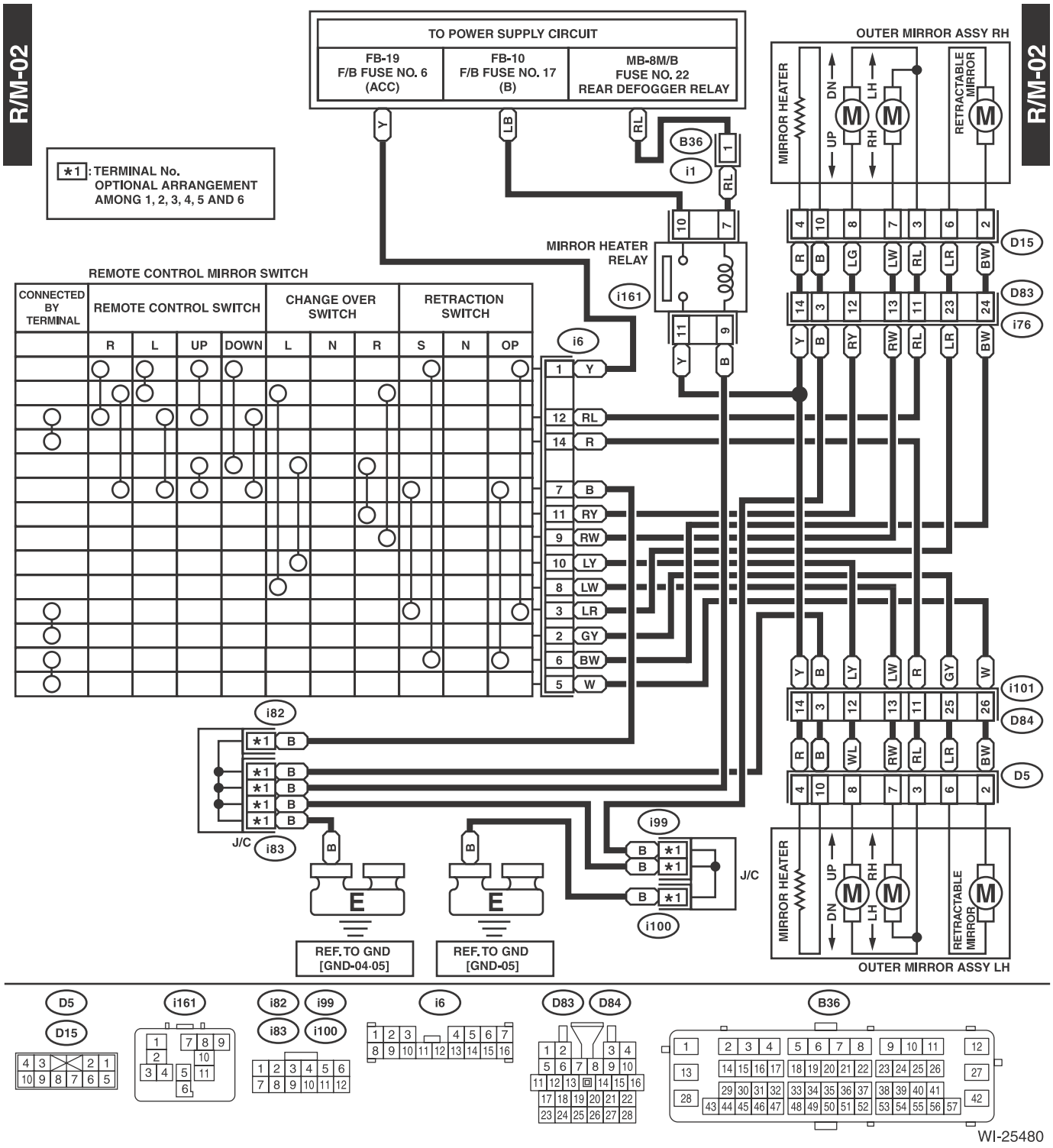

42.Remote Engine Start System

A: WIRING DIAGRAM

RE/GS-01

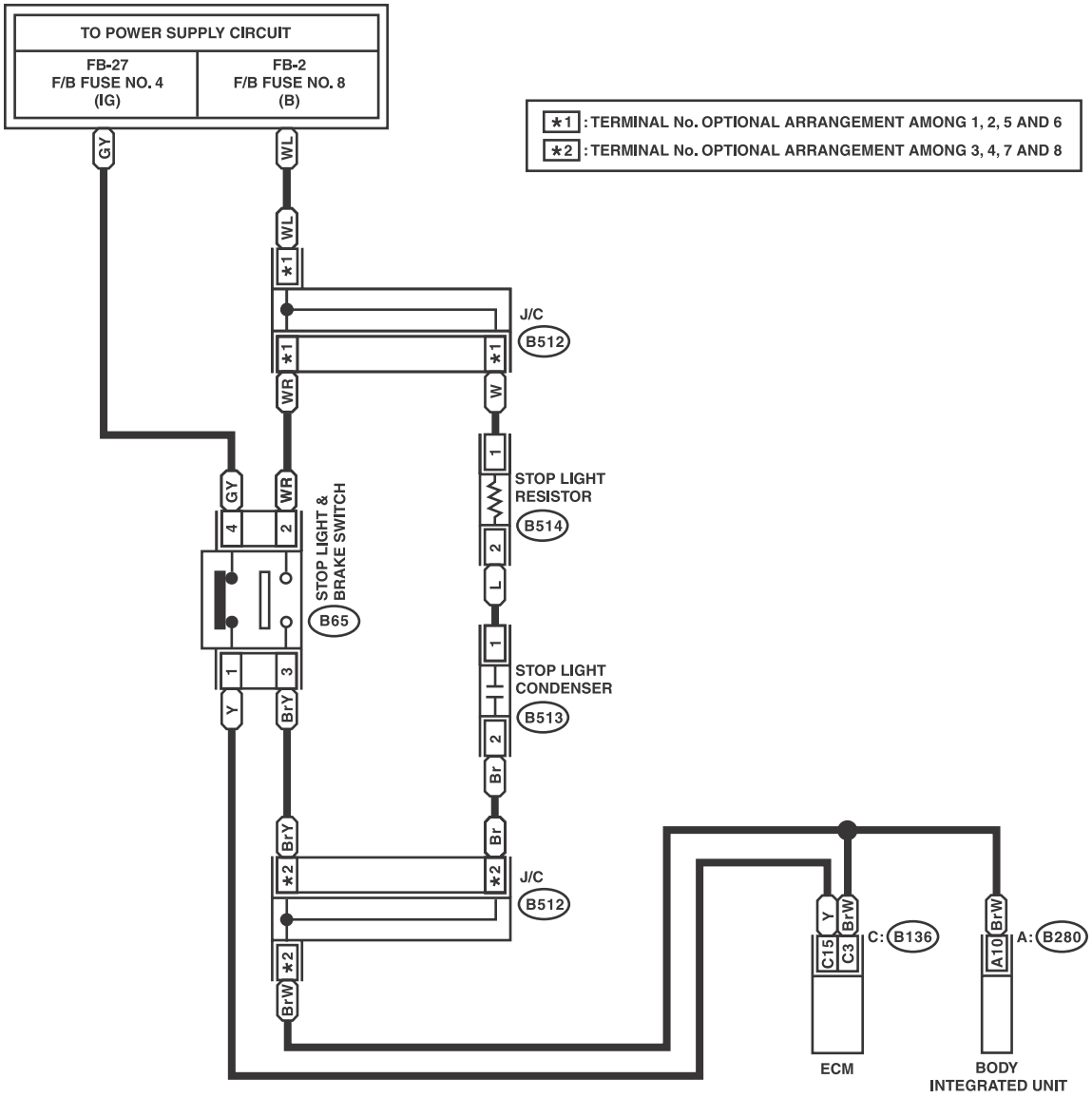

RE/GS-01

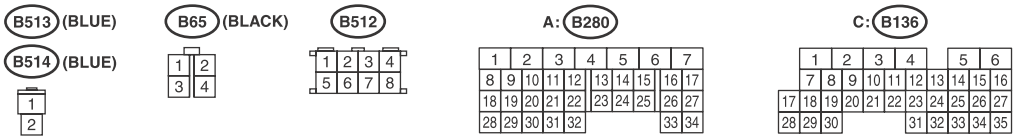

WI-25576

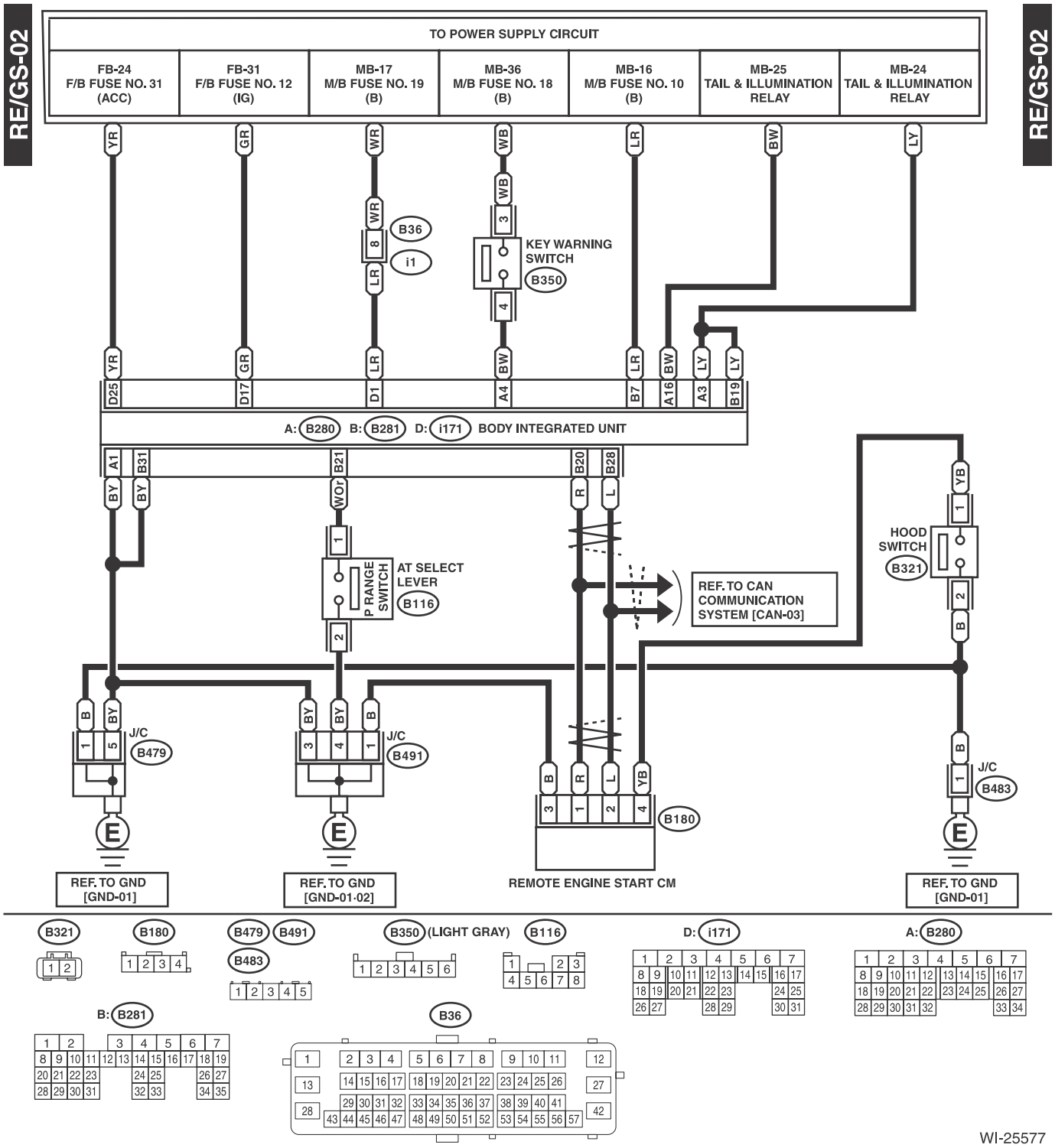
RE/GS-02
RE/GS-02
TO POWER SUPPLY CIRCUIT
FB-24 F/B FUSE NO. 31 (ACC)
FB-31 F/B FUSE NO. 12 (IG)
MB-17 M/B FUSE NO. 19 (B)
MB-36 M/B FUSE NO. 18 (B)
MB-16 M/B FUSE NO. 10 (B)
MB-25 TAIL & ILLUMINATION RELAY
MB-24 TAIL & ILLUMINATION RELAY
B36
i1
KEY WARNING SWITCH
B350
A: B280 B: B281 D: i171 BODY INTEGRATED UNIT
AT SELECT LEVER
P RANGE SWITCH
B116
REF. TO CAN COMMUNICATION SYSTEM [CAN-03]
HOOD SWITCH
B321
J/C
B479
J/C
B491
J/C
B483
B180
REMOTE ENGINE START CM
REF. TO GND [GND-01]
REF. TO GND [GND-01·02]
REF. TO GND [GND-01]
B321
B180
B479
B491
B483
B350 (LIGHT GRAY)
B116
D: i171
A: B280
B: B281
B36
WI-25577

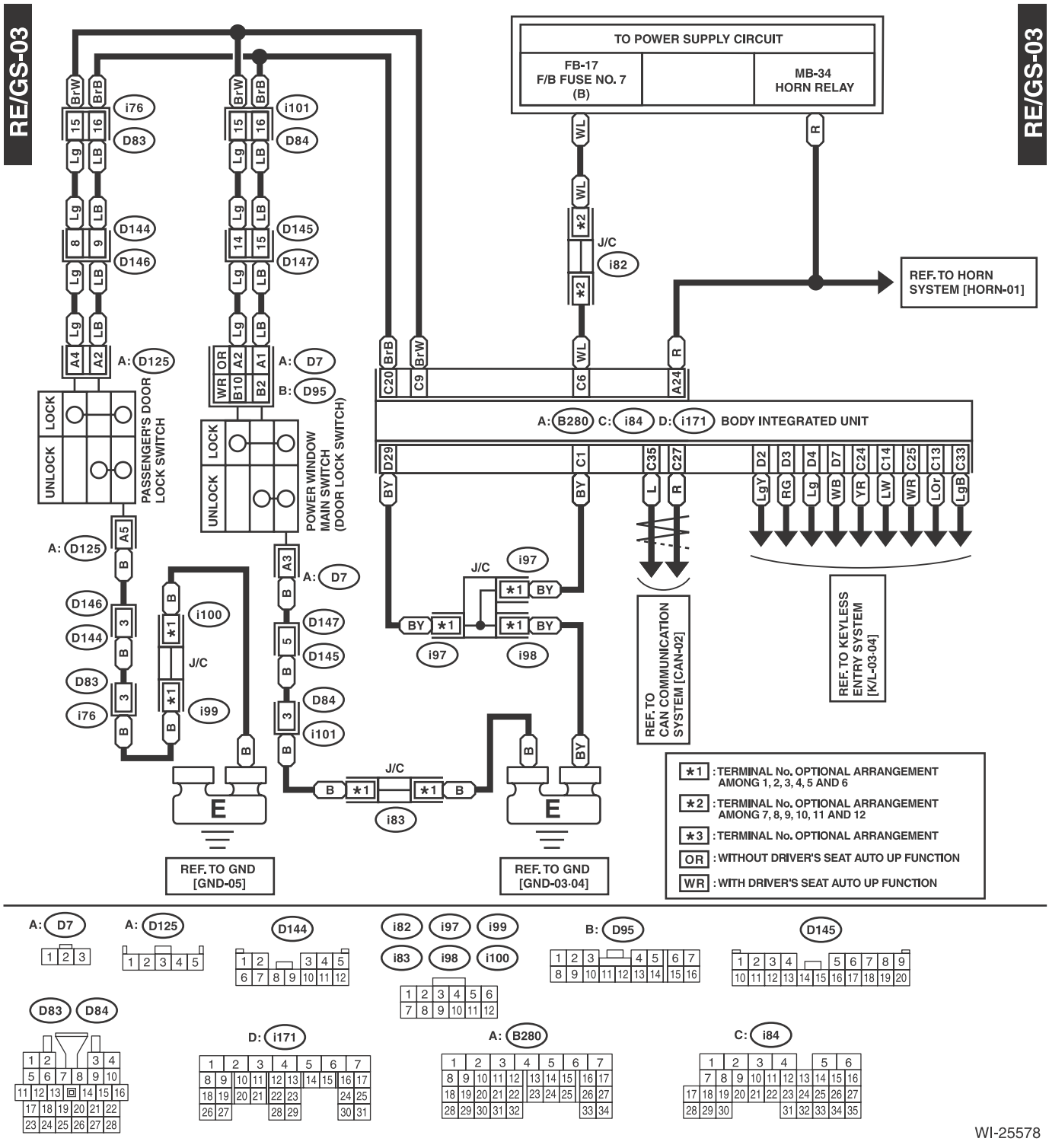
RE/GS-03
RE/GS-03
TO POWER SUPPLY CIRCUIT
FB-17
F/B FUSE NO. 7
(B)
MB-34
HORN RELAY
REF. TO HORN SYSTEM [HORN-01]
J/C
i82
A: B280 C: i84 D: i171 BODY INTEGRATED UNIT
PASSENGER'S DOOR LOCK SWITCH
POWER WINDOW MAIN SWITCH (DOOR LOCK SWITCH)
LOCK
UNLOCK
REF. TO CAN COMMUNICATION SYSTEM [CAN-02]
REF. TO KEYLESS ENTRY SYSTEM [K/L-03-04]
REF. TO GND [GND-05]
REF. TO GND [GND-03-04]
*1 : TERMINAL No. OPTIONAL ARRANGEMENT AMONG 1, 2, 3, 4, 5 AND 6
*2 : TERMINAL No. OPTIONAL ARRANGEMENT AMONG 7, 8, 9, 10, 11 AND 12
*3 : TERMINAL No. OPTIONAL ARRANGEMENT
OR : WITHOUT DRIVER'S SEAT AUTO UP FUNCTION
WR : WITH DRIVER'S SEAT AUTO UP FUNCTION

WI-25578

43.Seat Belt Warning System

A: WIRING DIAGRAM

1. MANUAL SEAT MODEL

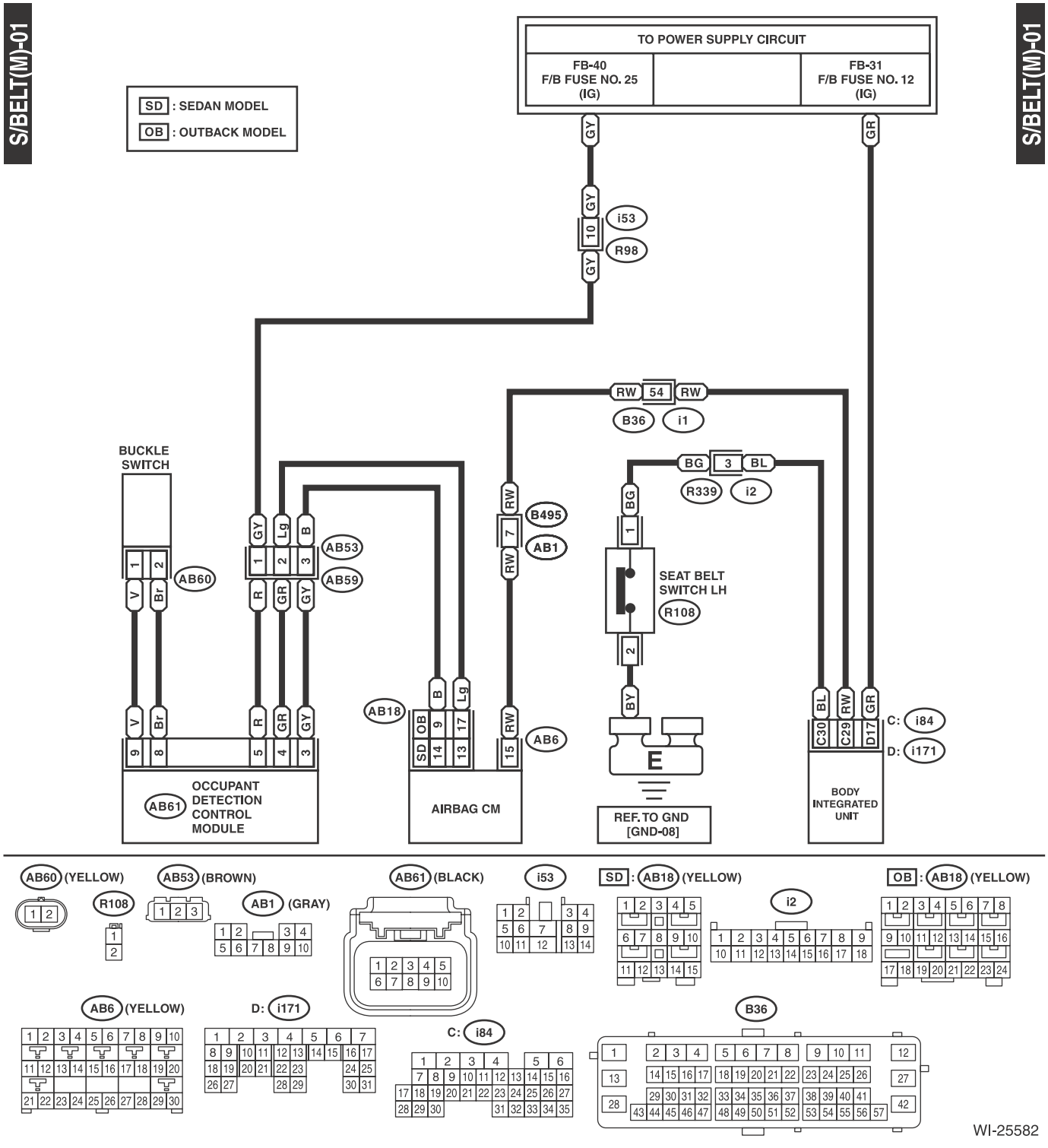

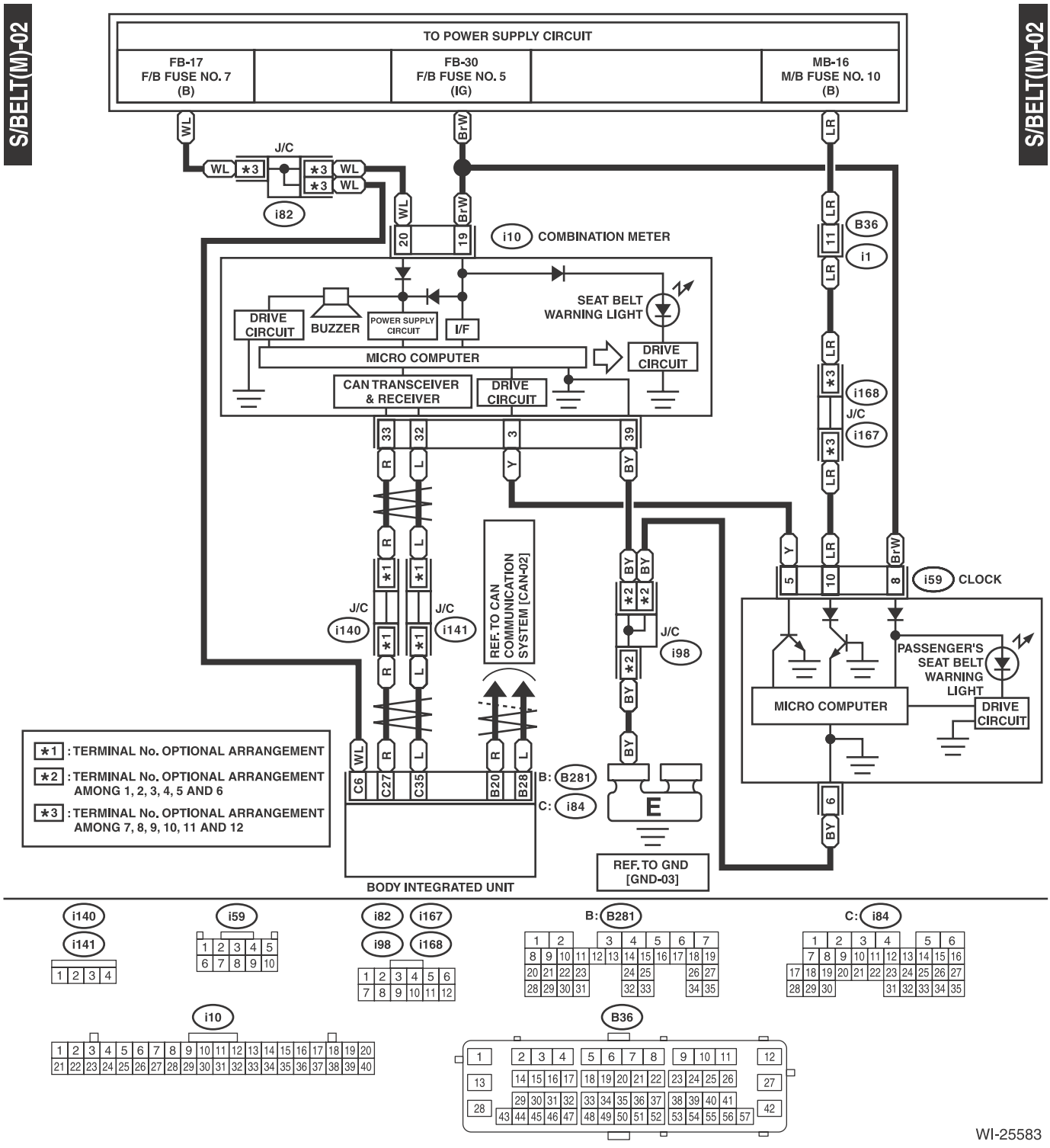
S/BELT(M)-02
S/BELT(M)-02
TO POWER SUPPLY CIRCUIT
FB-17
F/B FUSE NO. 7
(B)
FB-30
F/B FUSE NO. 5
(IG)
MB-16
M/B FUSE NO. 10
(B)
J/C
i82
i10 COMBINATION METER
B36
i1
SEAT BELT
WARNING LIGHT
DRIVE
CIRCUIT
BUZZER
POWER SUPPLY
CIRCUIT
I/F
MICRO COMPUTER
CAN TRANSCEIVER
& RECEIVER
i168
i167
i59 CLOCK
PASSENGER'S
SEAT BELT
WARNING
LIGHT
i140
i141
i98
REF. TO CAN
COMMUNICATION
SYSTEM [CAN-02]
*1 : TERMINAL No. OPTIONAL ARRANGEMENT
*2 : TERMINAL No. OPTIONAL ARRANGEMENT
AMONG 1, 2, 3, 4, 5 AND 6
*3 : TERMINAL No. OPTIONAL ARRANGEMENT
AMONG 7, 8, 9, 10, 11 AND 12
B: B281
C: i84
BODY INTEGRATED UNIT
REF. TO GND
[GND-03]
B: B281
C: i84
WI-25583

2. MODEL WITH POWER SEATS

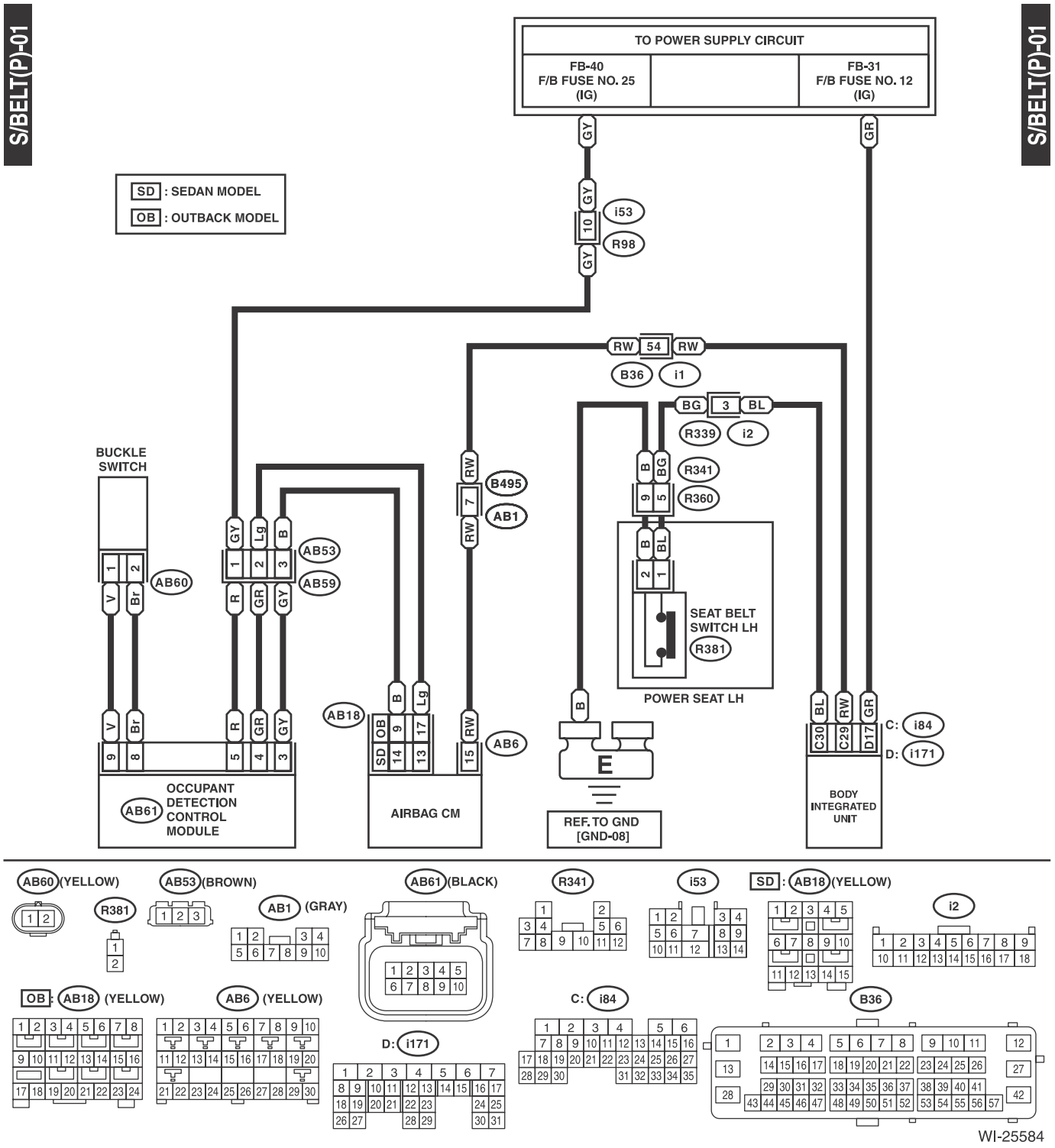

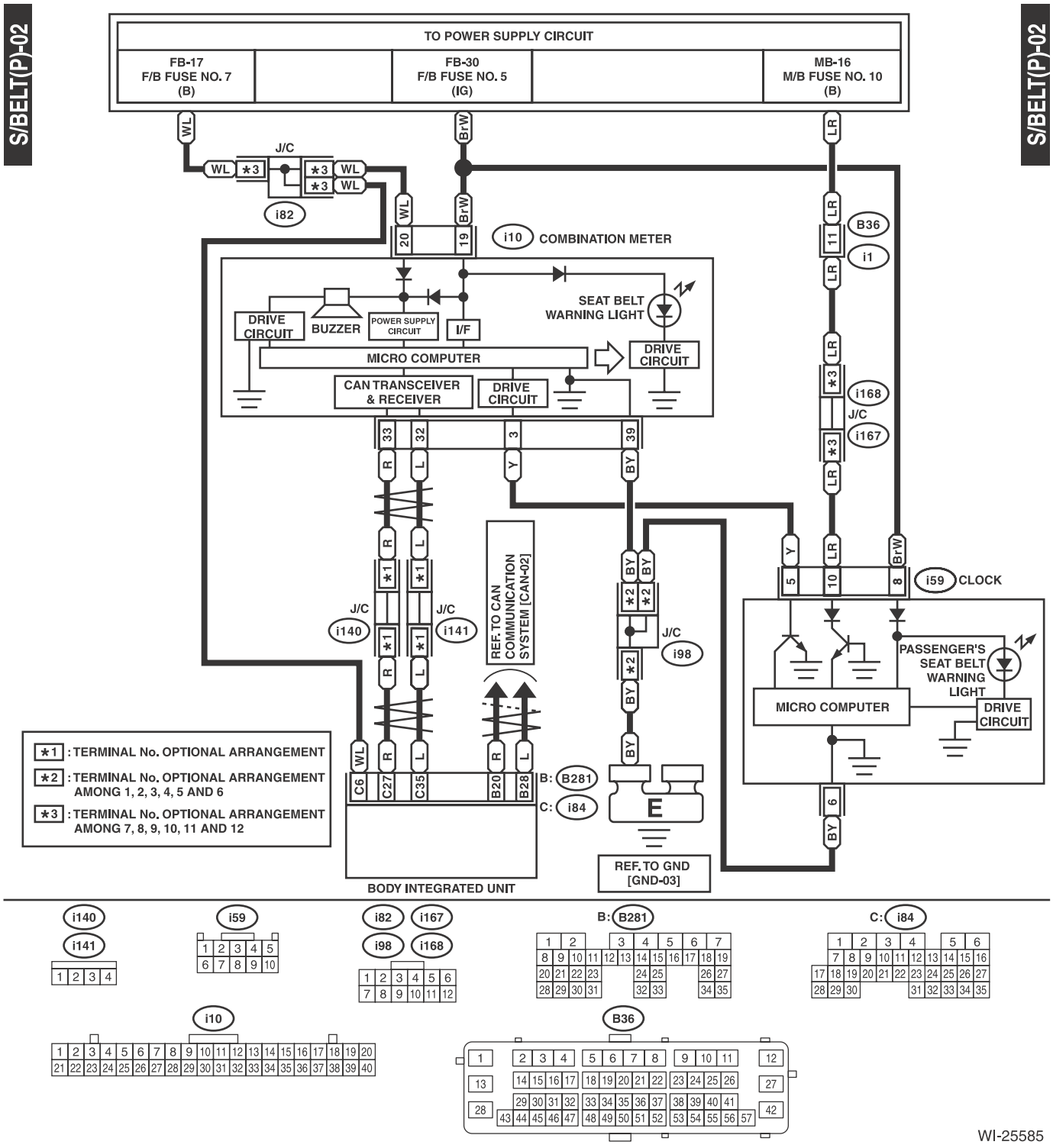
S/BELT(P)-02
S/BELT(P)-02
TO POWER SUPPLY CIRCUIT
FB-17
F/B FUSE NO. 7
(B)
FB-30
F/B FUSE NO. 5
(IG)
MB-16
M/B FUSE NO. 10
(B)
J/C
i82
i10
COMBINATION METER
B36
i1
SEAT BELT
WARNING LIGHT
DRIVE
CIRCUIT
BUZZER
POWER SUPPLY
CIRCUIT
I/F
MICRO COMPUTER
CAN TRANSCEIVER
& RECEIVER
i168
i167
i59
CLOCK
i140
i141
i98
REF. TO CAN
COMMUNICATION
SYSTEM [CAN-02]
PASSENGER'S
SEAT BELT
WARNING
LIGHT
*1 : TERMINAL No. OPTIONAL ARRANGEMENT
*2 : TERMINAL No. OPTIONAL ARRANGEMENT
AMONG 1, 2, 3, 4, 5 AND 6
*3 : TERMINAL No. OPTIONAL ARRANGEMENT
AMONG 7, 8, 9, 10, 11 AND 12
B: B281
C: i84
BODY INTEGRATED UNIT
REF. TO GND
[GND-03]
B: B281
C: i84
B36
WI-25585

44.Seat Heater System

A: WIRING DIAGRAM

1. MANUAL SEAT MODEL

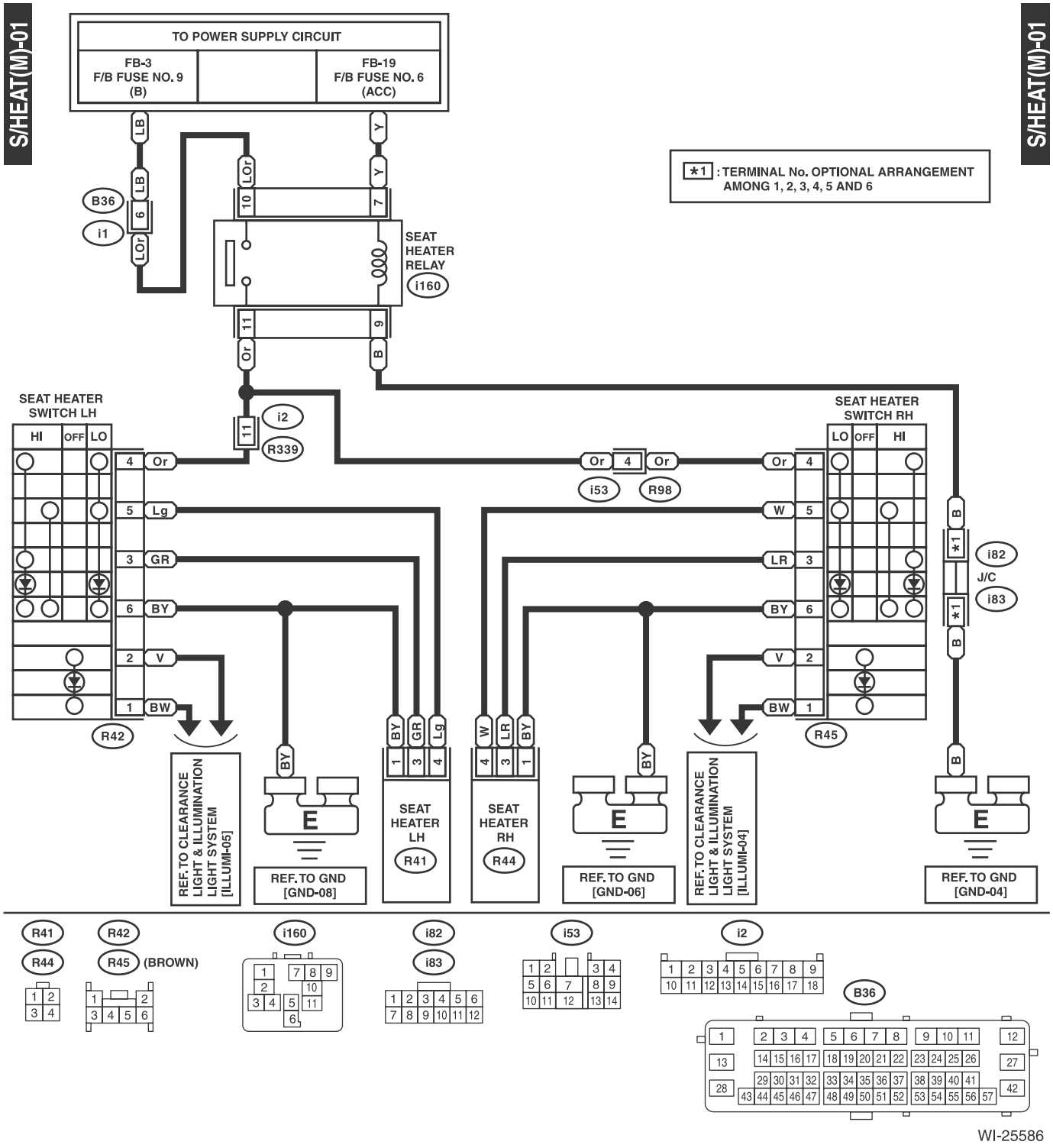

2. MODEL WITH POWER SEATS

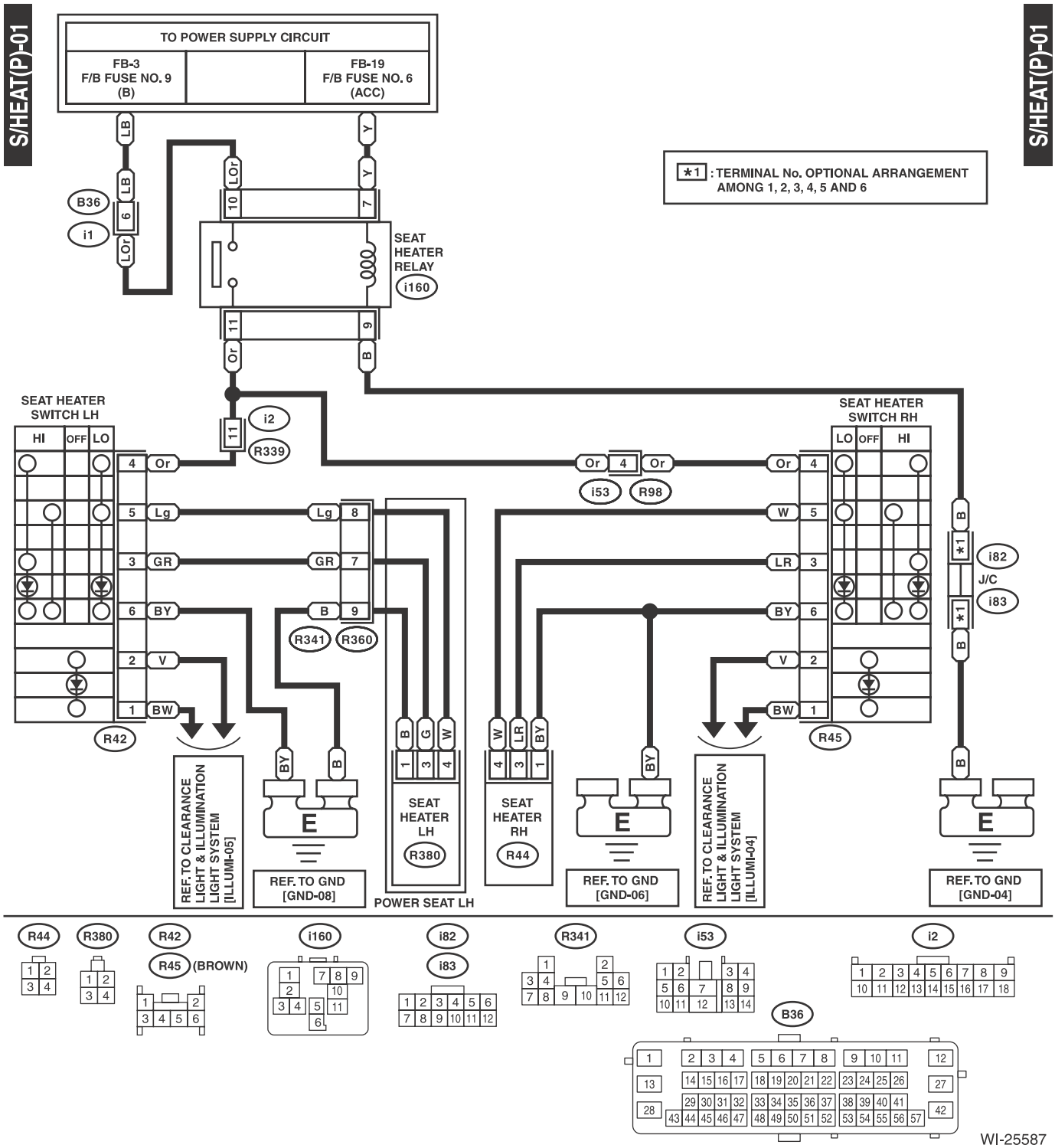

45.Security System

A: WIRING DIAGRAM

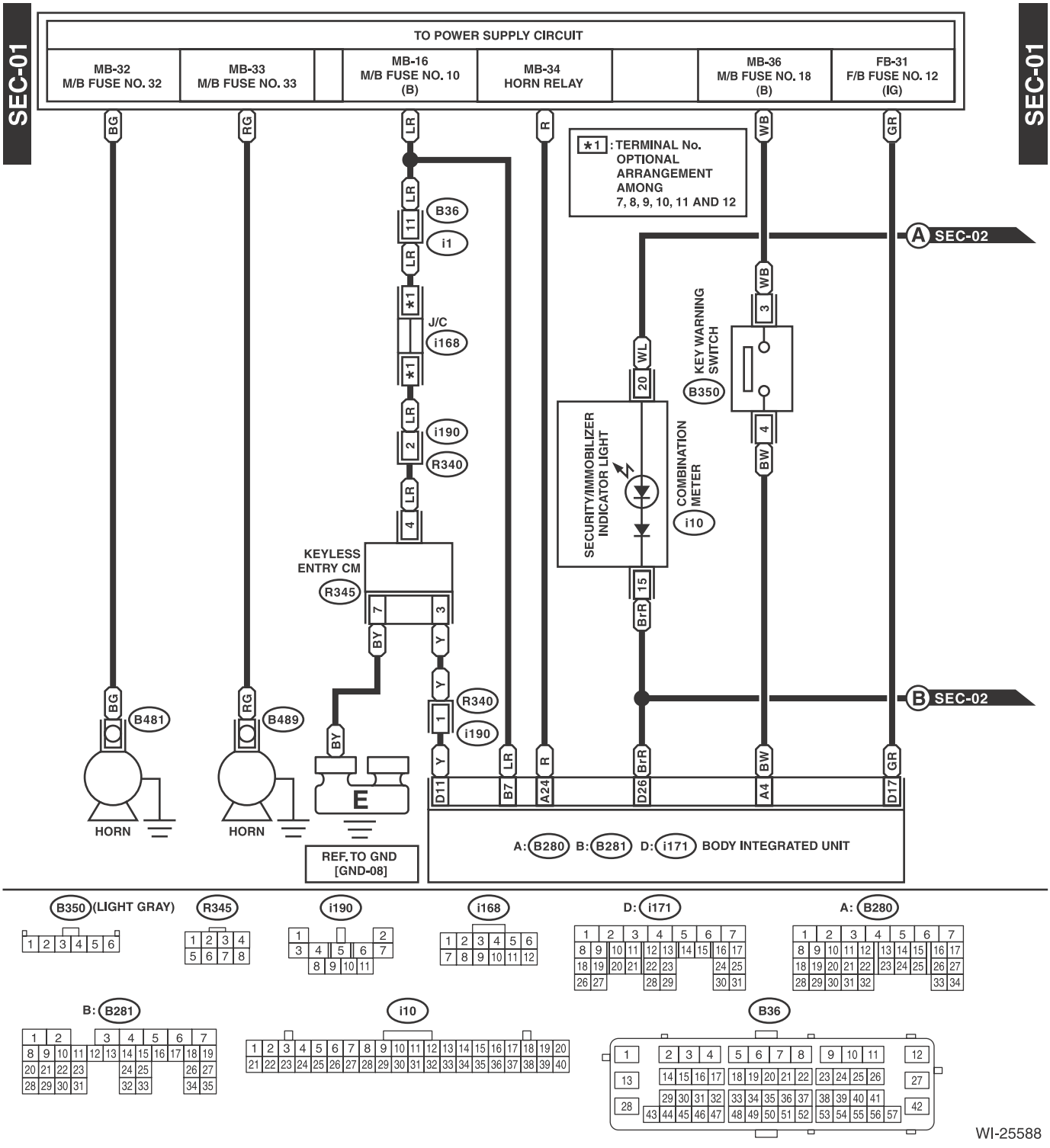

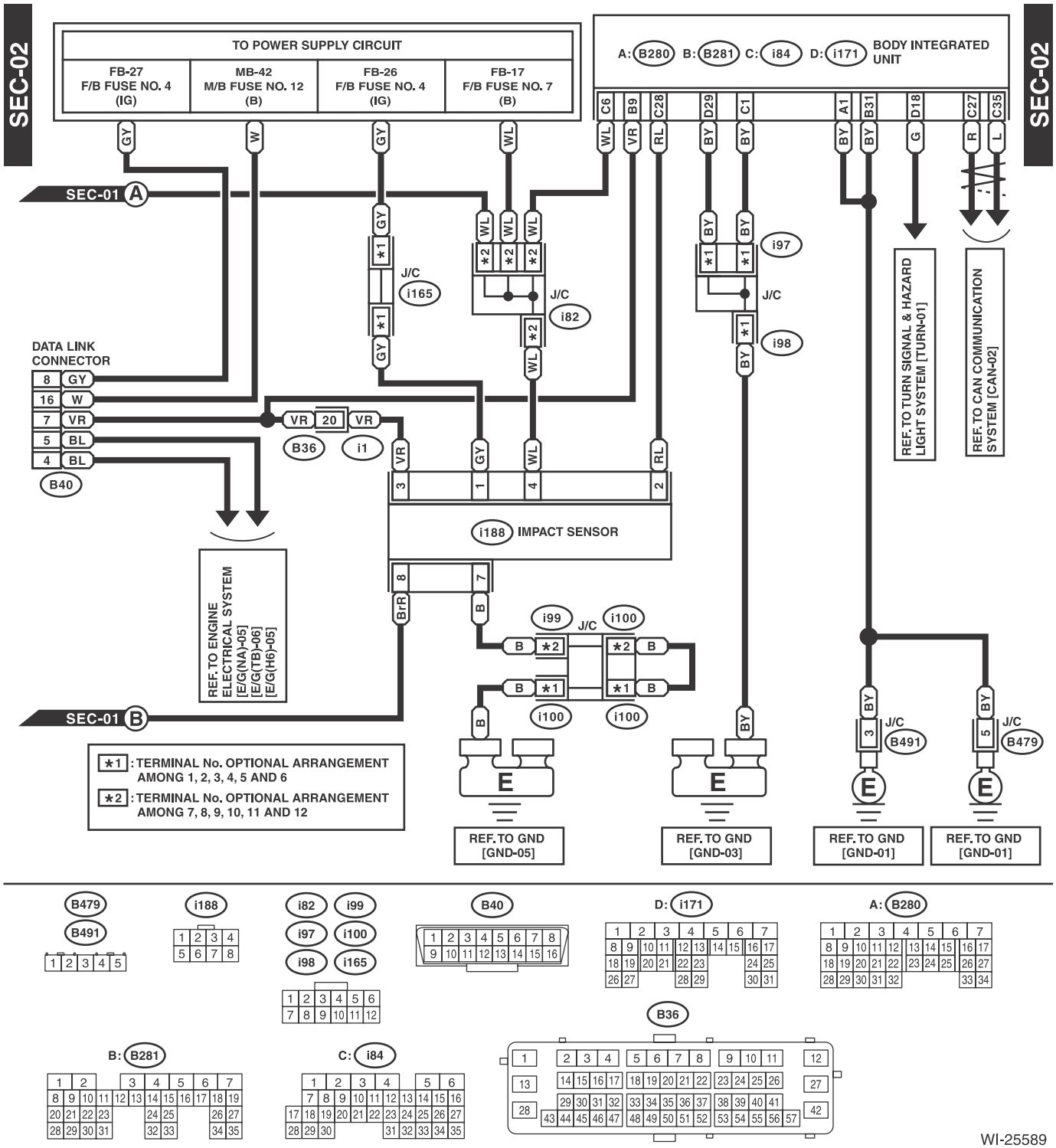
SEC-02
TO POWER SUPPLY CIRCUIT
FB-27 F/B FUSE NO. 4 (IG)
MB-42 M/B FUSE NO. 12 (B)
FB-26 F/B FUSE NO. 4 (IG)
FB-17 F/B FUSE NO. 7 (B)
A: B280 B: B281 C: i84 D: i171 BODY INTEGRATED UNIT
SEC-01 A
SEC-01 B
DATA LINK CONNECTOR
J/C i165
J/C i82
J/C i97
J/C i98
J/C i99
J/C i100
J/C B491
J/C B479
i188 IMPACT SENSOR
REF. TO ENGINE ELECTRICAL SYSTEM [E/G(NA)-05] [E/G(TB)-06] [E/G(H6)-05]
REF. TO TURN SIGNAL & HAZARD LIGHT SYSTEM [TURN-01]
REF. TO CAN COMMUNICATION SYSTEM [CAN-02]
REF. TO GND [GND-05]
REF. TO GND [GND-03]
REF. TO GND [GND-01]
REF. TO GND [GND-01]
*1 : TERMINAL No. OPTIONAL ARRANGEMENT AMONG 1, 2, 3, 4, 5 AND 6
*2 : TERMINAL No. OPTIONAL ARRANGEMENT AMONG 7, 8, 9, 10, 11 AND 12

B479
B491
i188
i82
i97
i98
i99
i100
i165
B40
D: i171
A: B280
B: B281
C: i84
B36
WI-25589

SEC-03

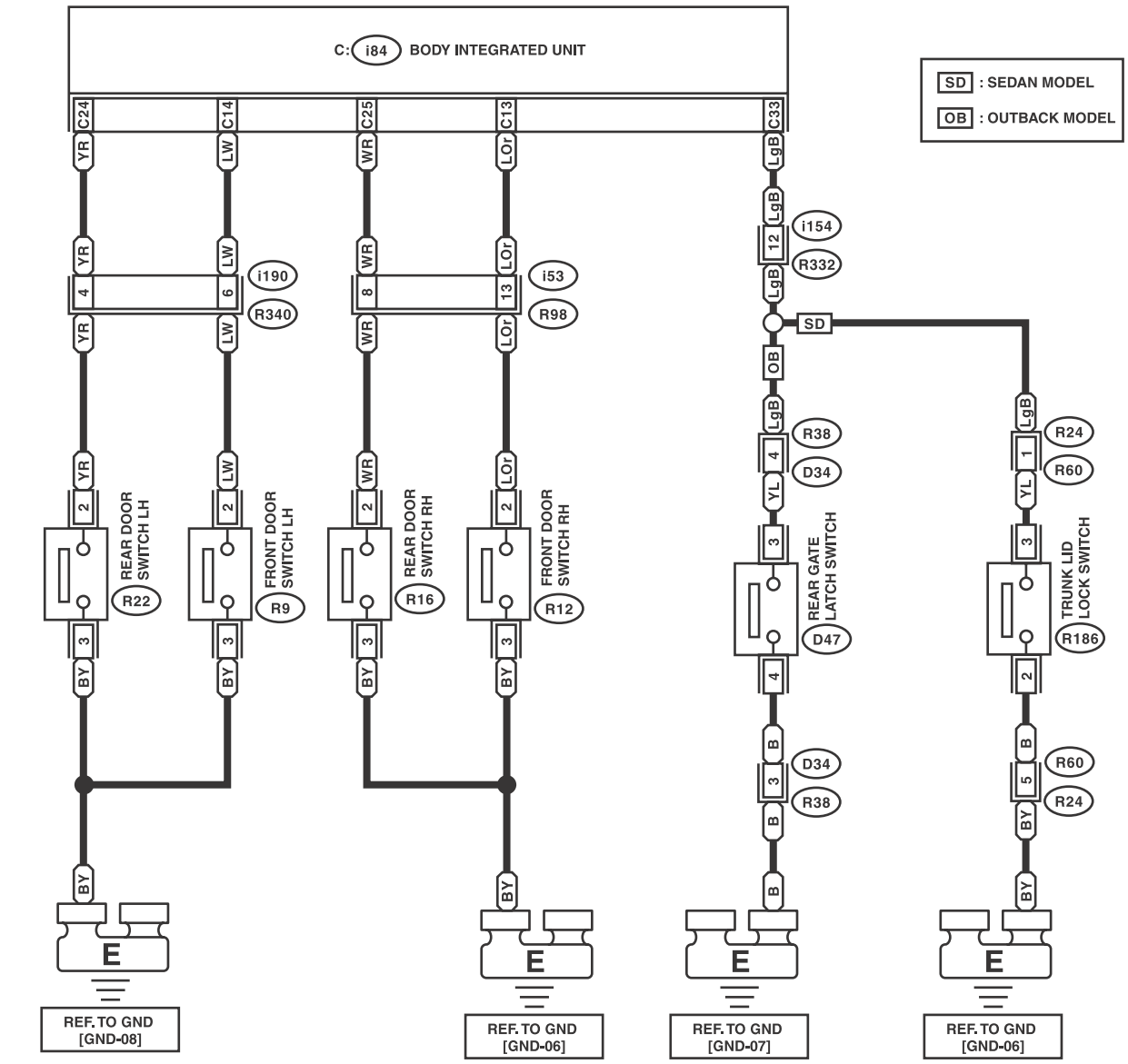

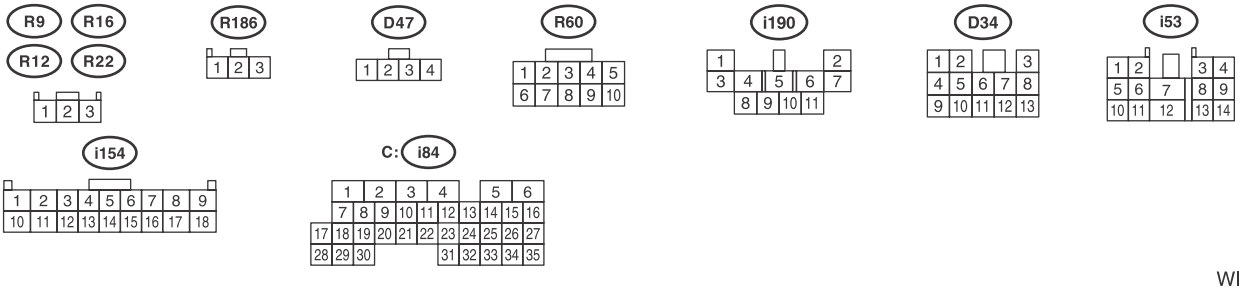

WI-25590

SEC-03

46.Speedometer System

A: WIRING DIAGRAM

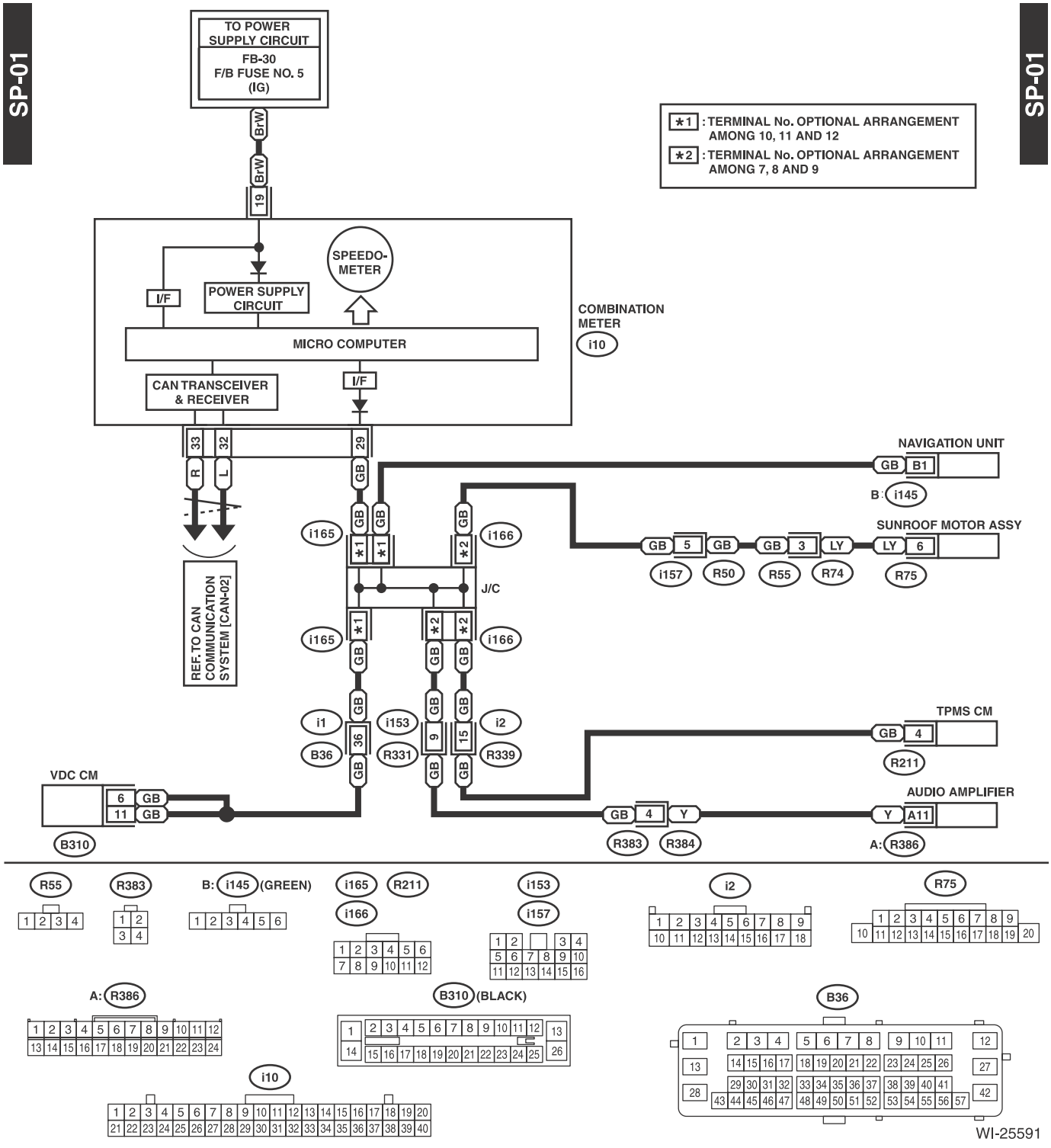

47.Starter System

A: WIRING DIAGRAM

1. 2.5 L NON-TURBO MODEL

ST(NA)-01

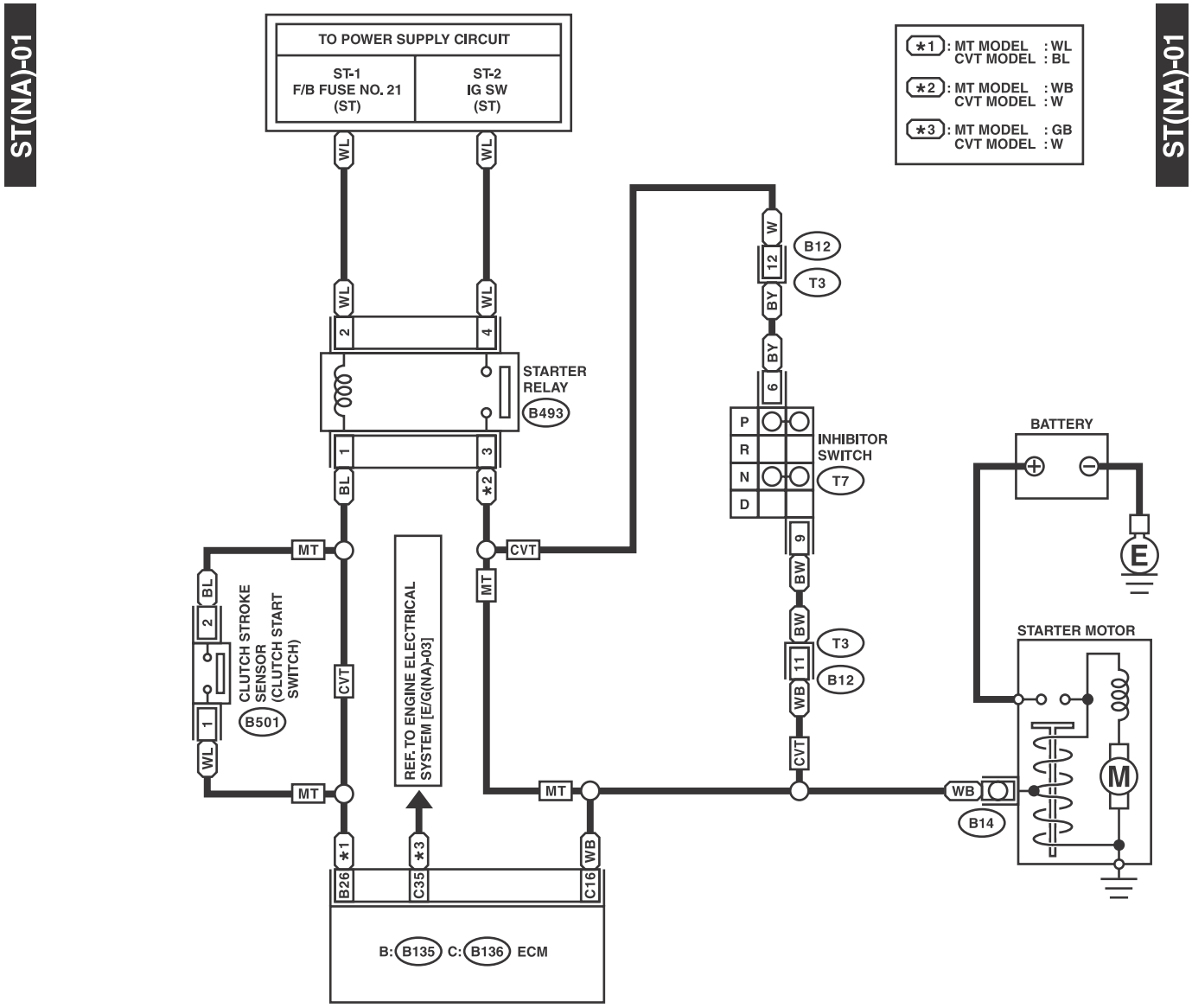

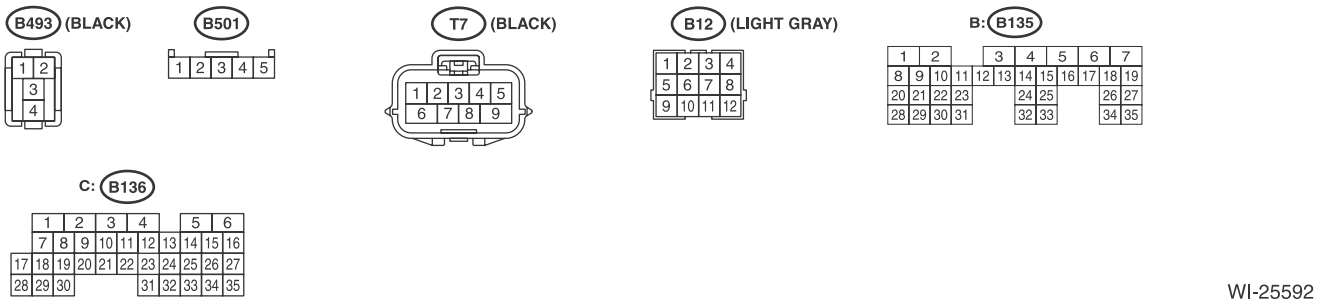

WI-25592

ST(NA)-01

2. 2.5 L TURBO MODEL

ST(TB)-01

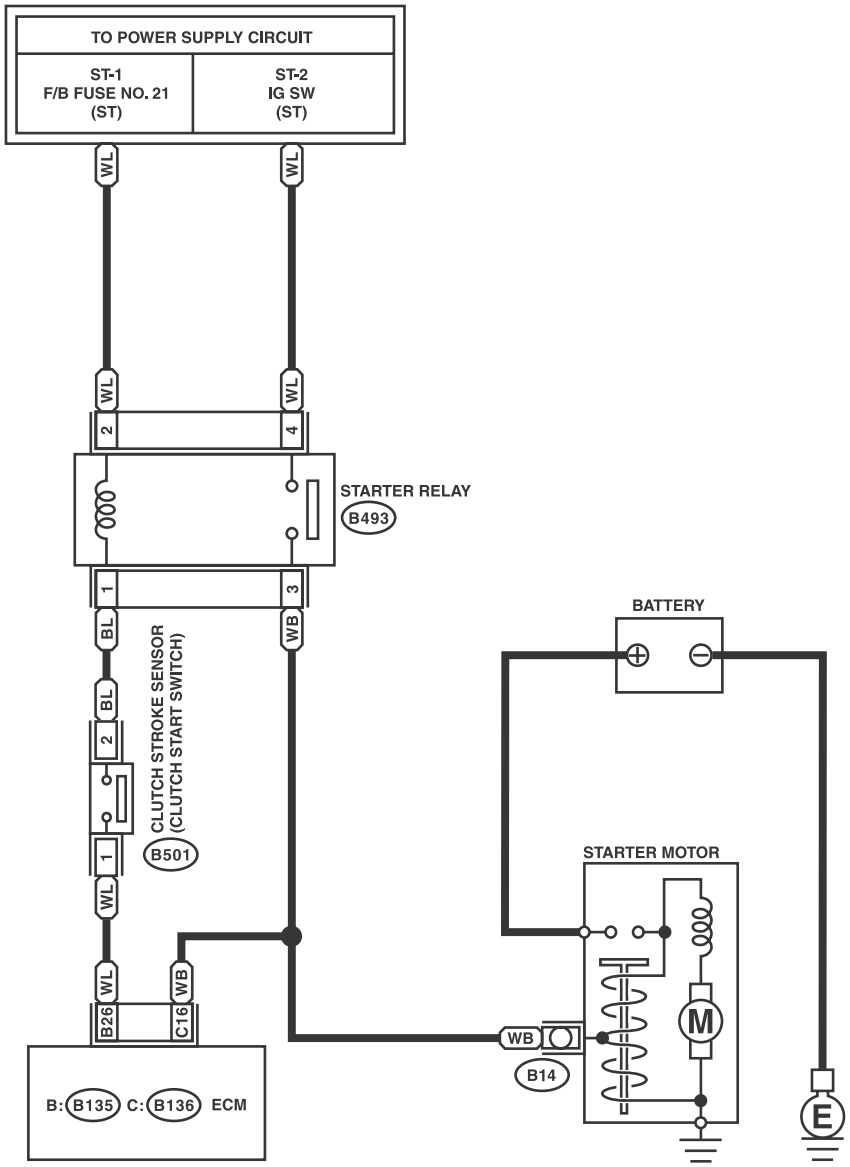

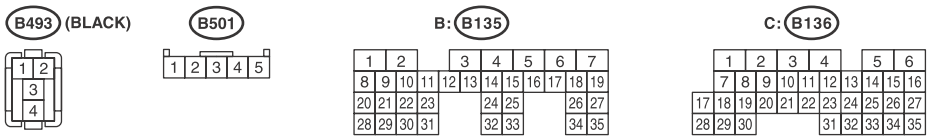

WI-25593

3. 3.6 L MODEL

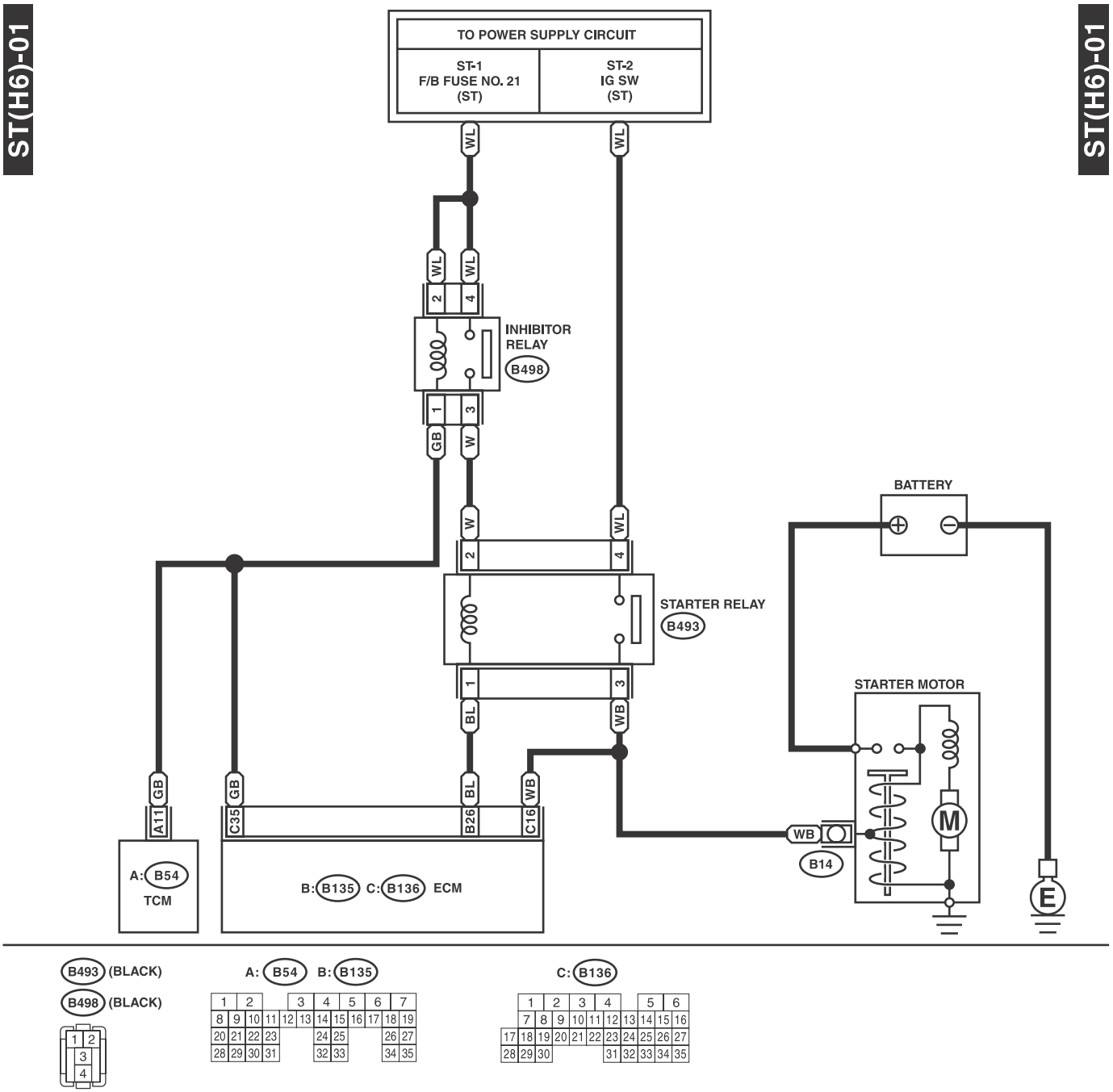

WI-25594

48.Stop Light System

A: WIRING DIAGRAM

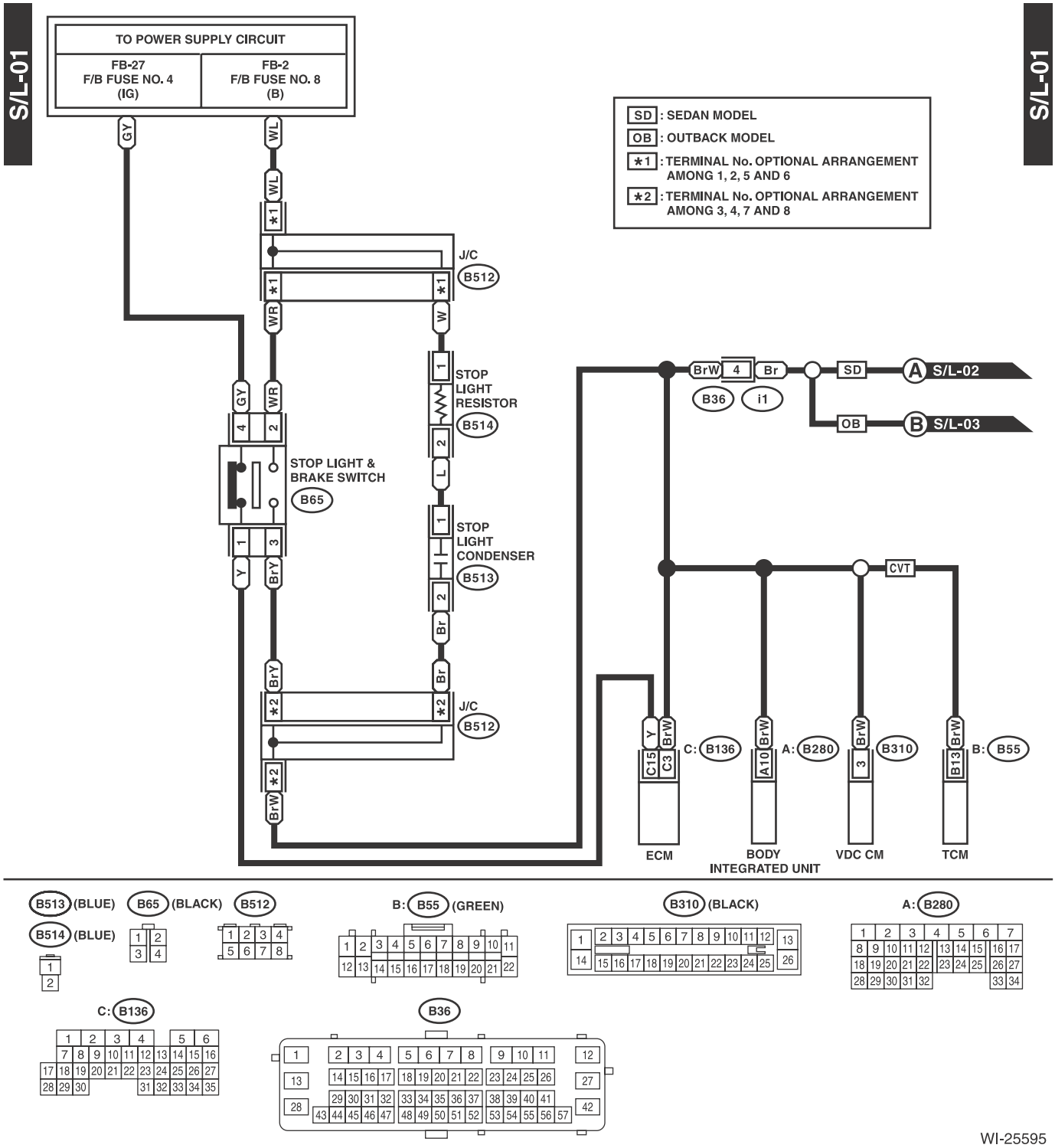

WI-25595

S/L-02

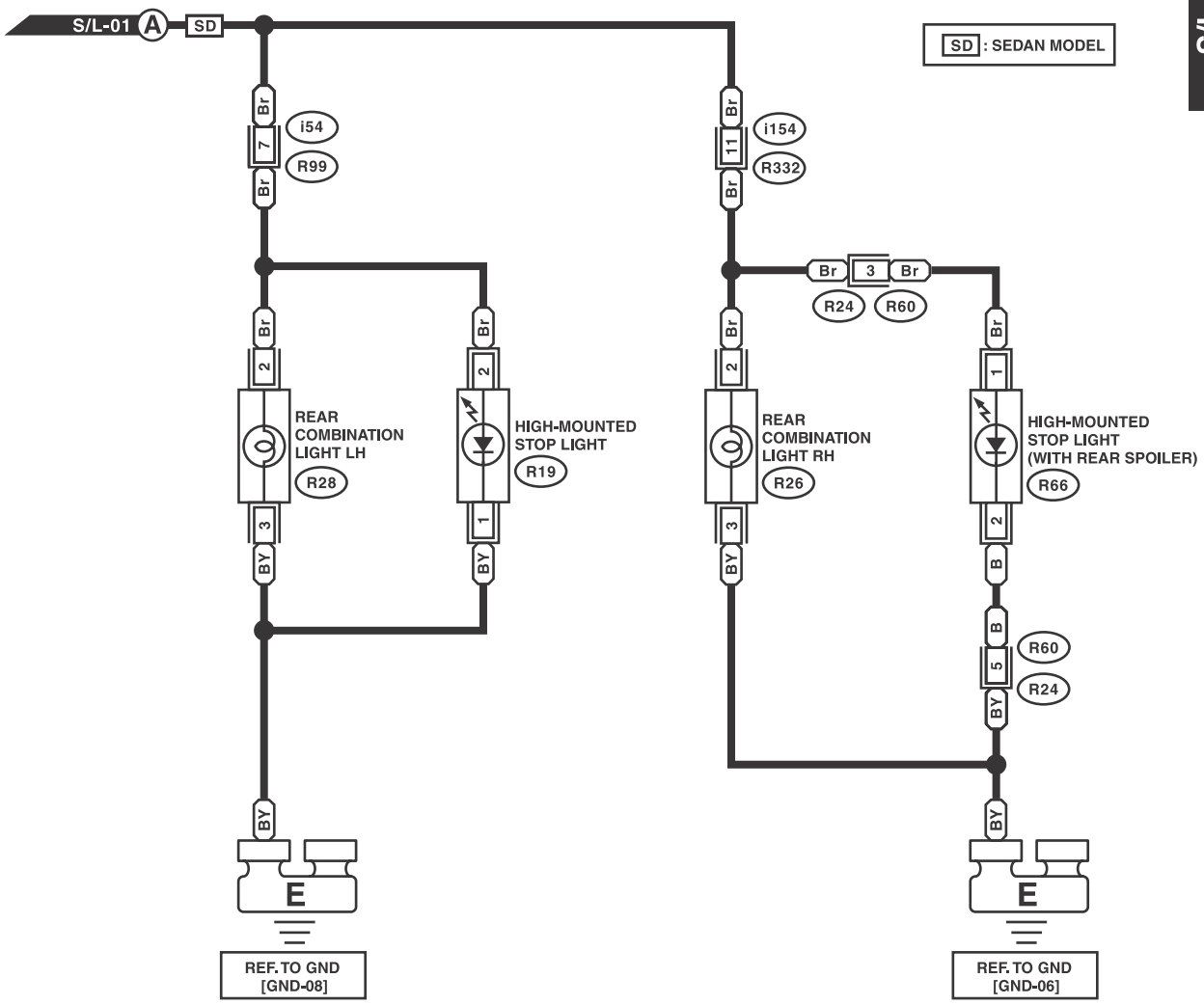

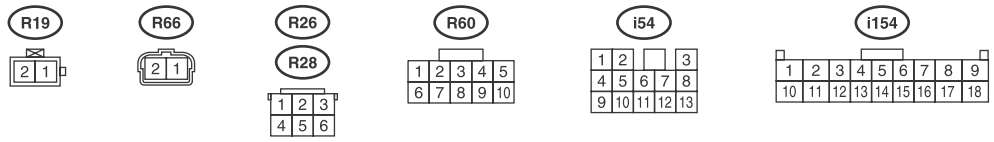

WI-25596

S/L-03

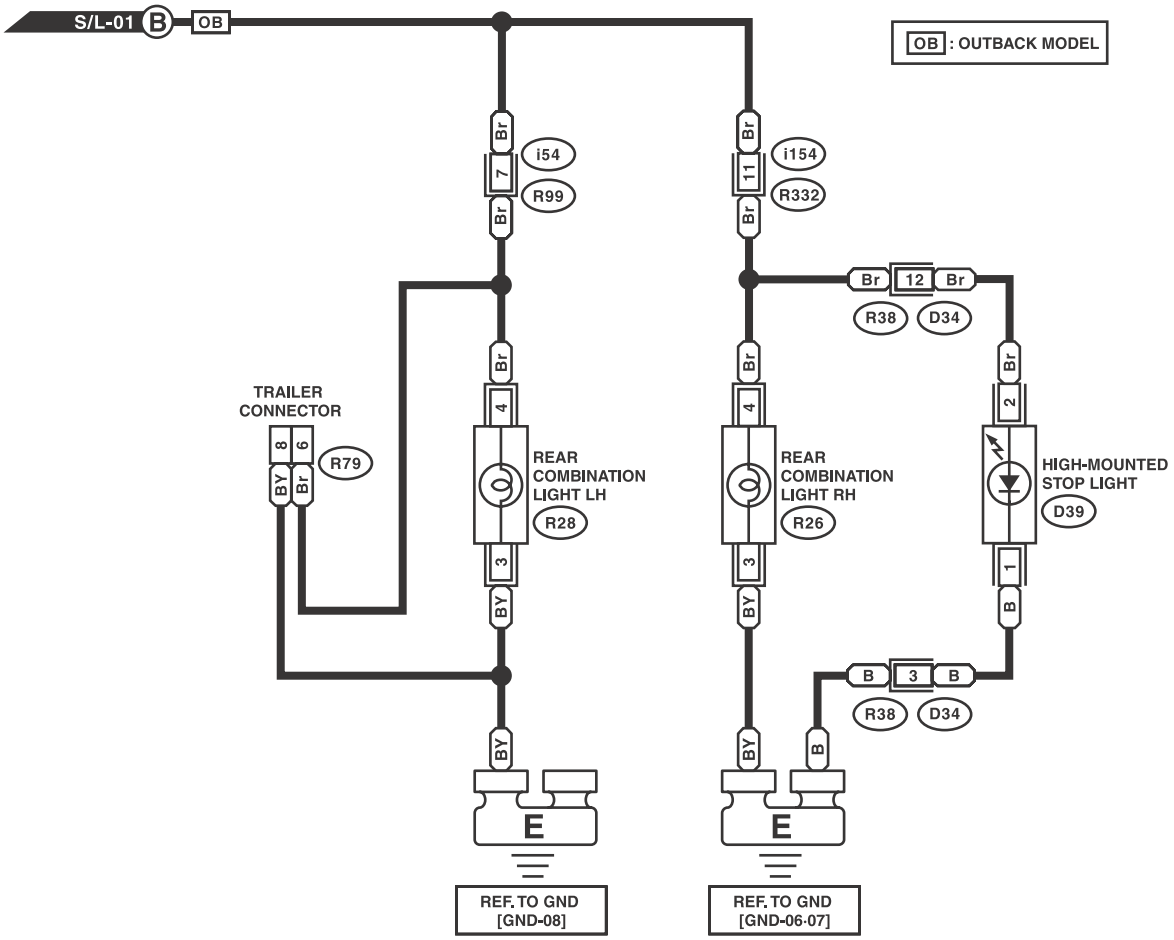

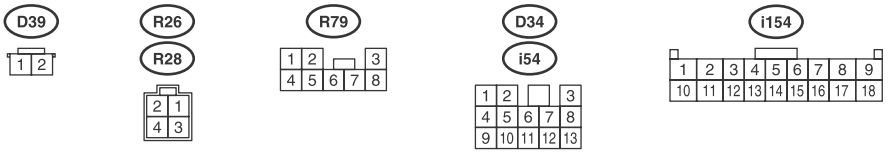

WI-25597

49.Sunroof Control System

A: WIRING DIAGRAM

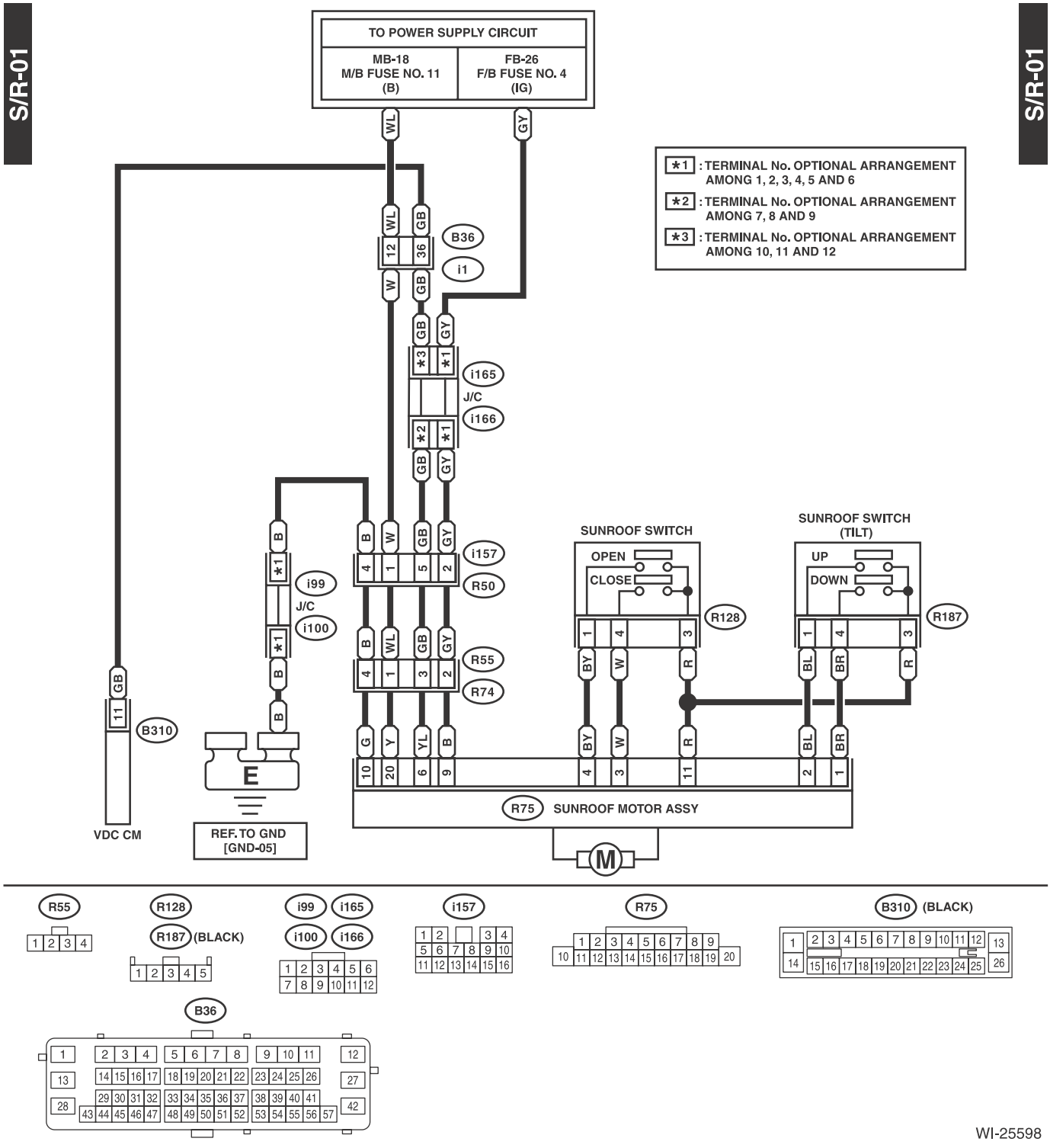

50. Tire Pressure Monitoring System

A: WIRING DIAGRAM

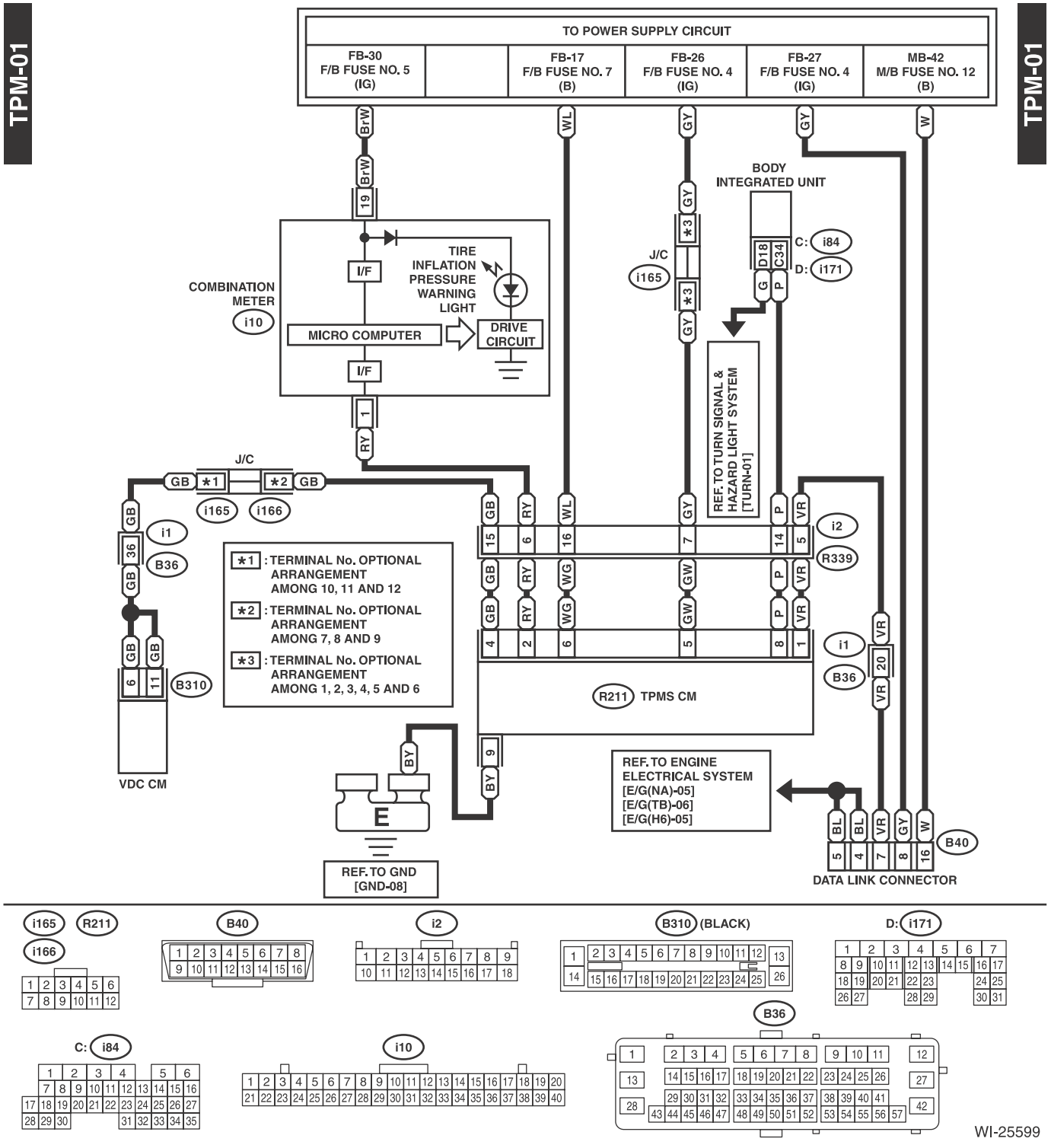

51.Turn Signal Light and Hazard Light System

A: WIRING DIAGRAM

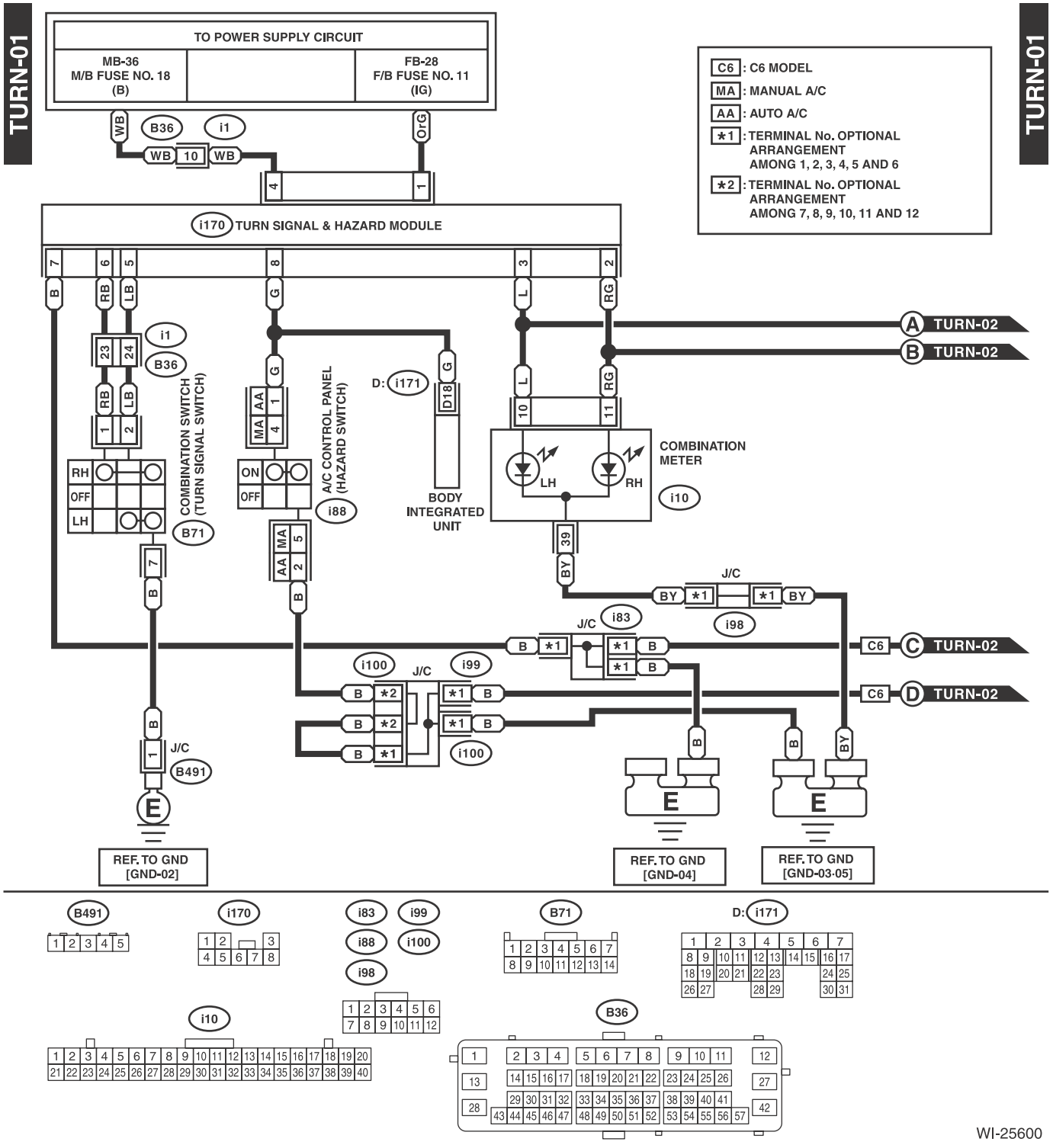

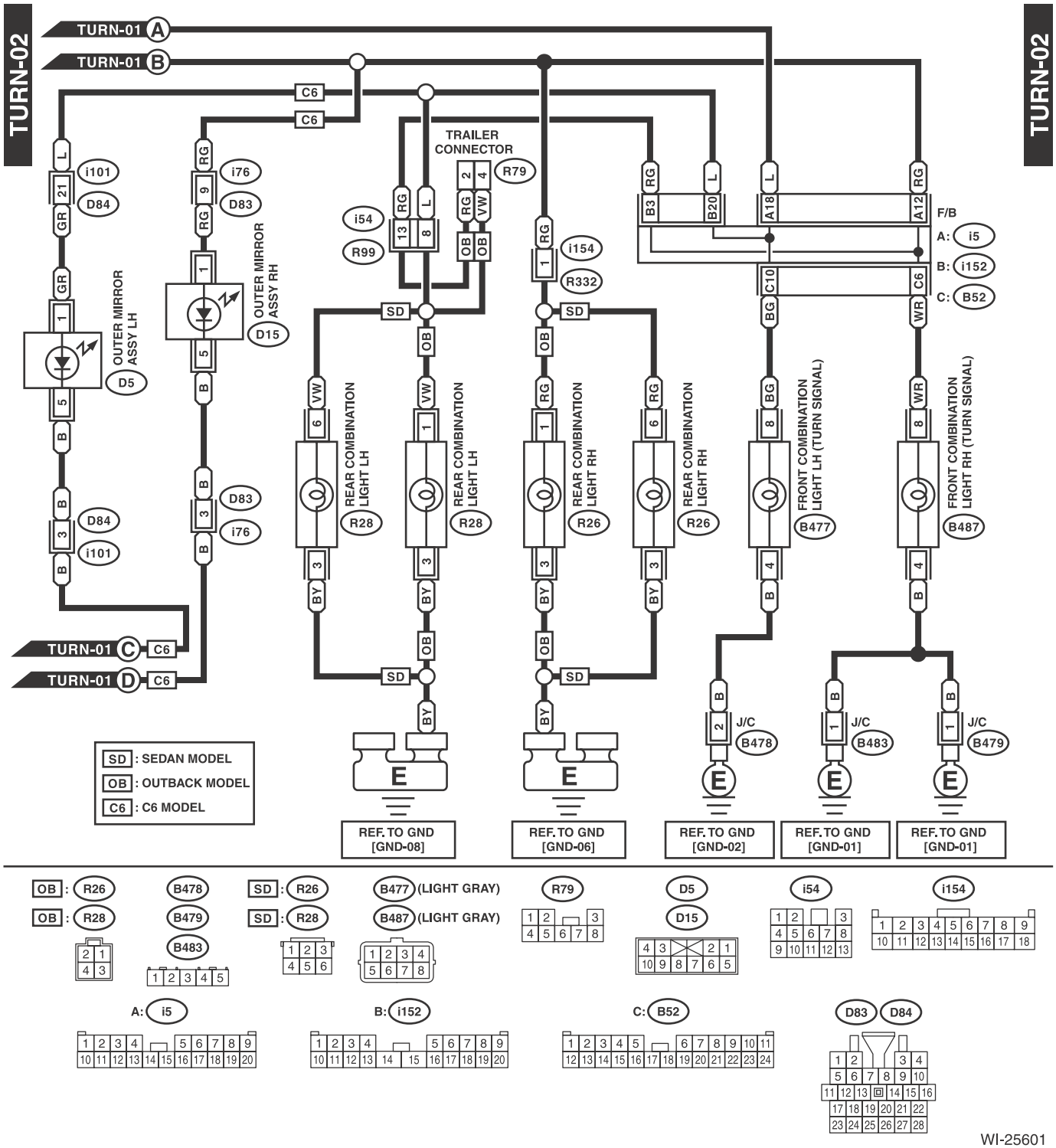
TURN-02
TURN-01 A
TURN-01 B
C6
C6
TRAILER CONNECTOR
R79
i101
D84
i76
D83
i54
R99
i154
R332
F/B
A: i5
B: i152
C: B52
OUTER MIRROR ASSY LH
D5
OUTER MIRROR ASSY RH
D15
REAR COMBINATION LIGHT LH
R28
REAR COMBINATION LIGHT RH
R26
FRONT COMBINATION LIGHT LH (TURN SIGNAL)
B477
FRONT COMBINATION LIGHT RH (TURN SIGNAL)
B487
J/C
B478
B483
B479
TURN-01 C C6
TURN-01 D C6
SD : SEDAN MODEL
OB : OUTBACK MODEL
C6 : C6 MODEL
REF. TO GND [GND-08]
REF. TO GND [GND-06]
REF. TO GND [GND-02]
REF. TO GND [GND-01]
REF. TO GND [GND-01]
OB : R26
OB : R28
SD : R26
SD : R28
B477 (LIGHT GRAY)
B487 (LIGHT GRAY)
R79
D5
D15
i54
i154
A: i5
B: i152
C: B52
D83
D84
WI-25601

52. Vehicle Dynamics Control System

A: WIRING DIAGRAM

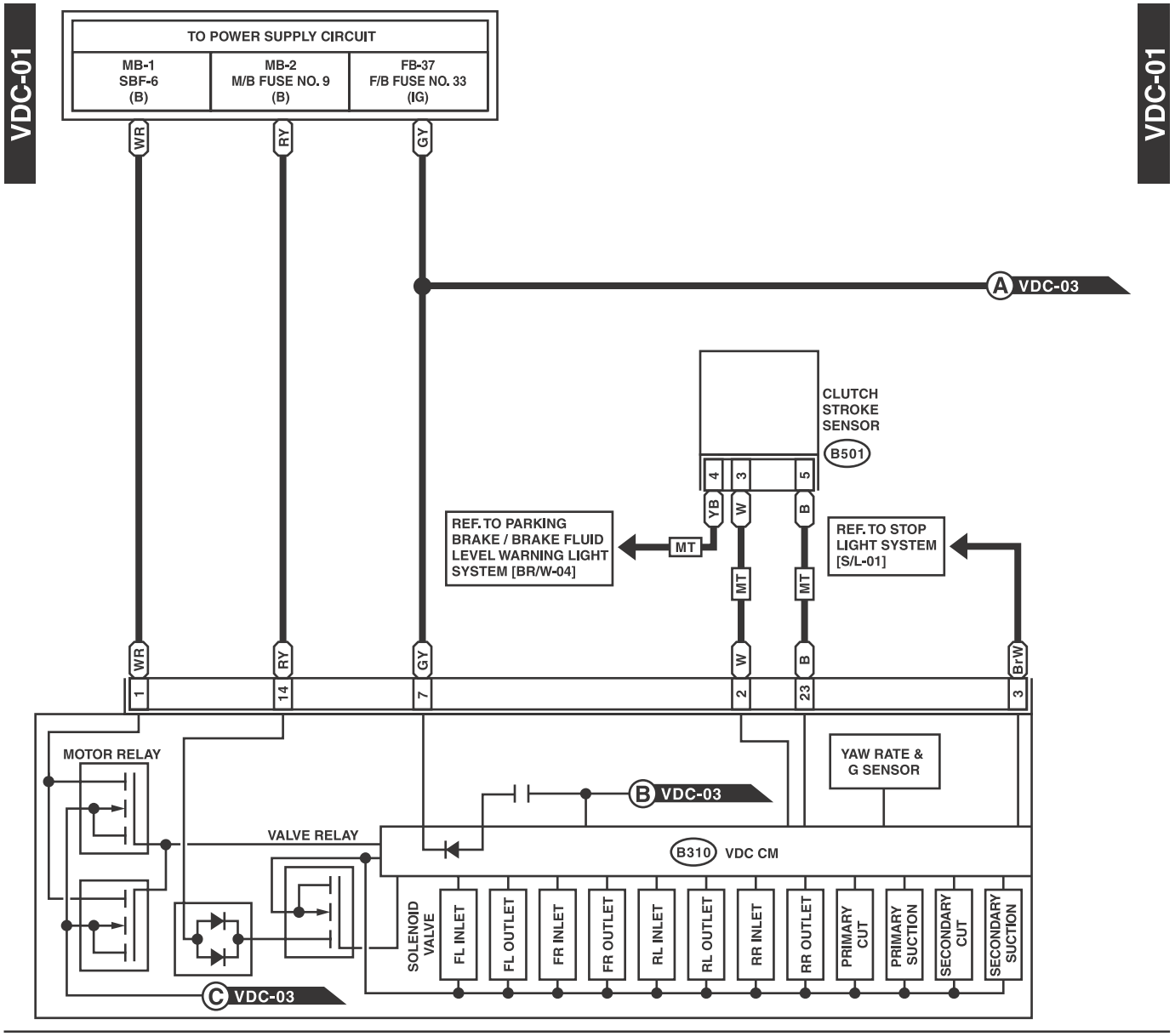

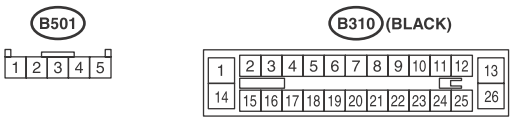

WI-25602

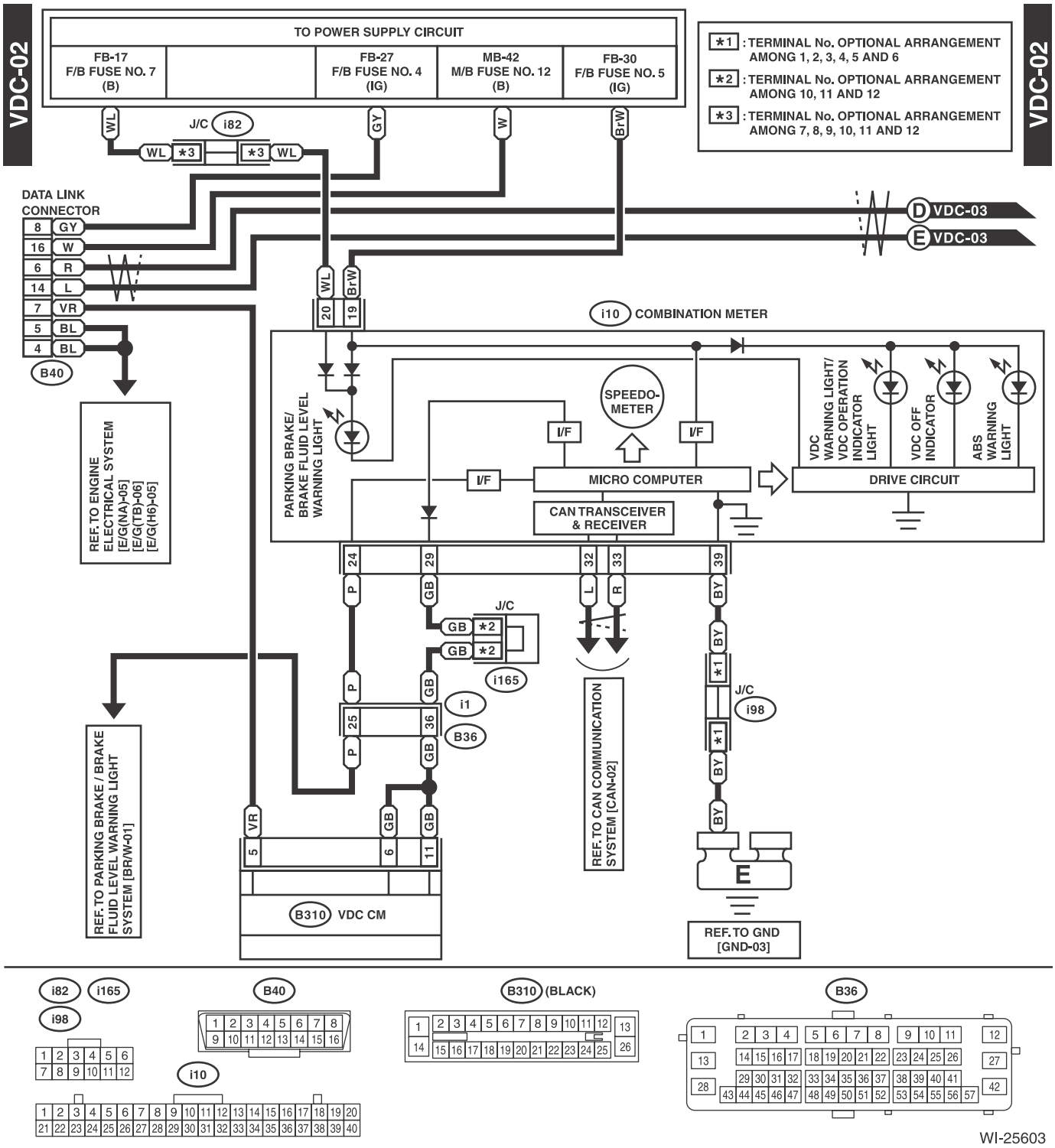
VDC-02
TO POWER SUPPLY CIRCUIT
FB-17 F/B FUSE NO. 7 (B)
FB-27 F/B FUSE NO. 4 (IG)
MB-42 M/B FUSE NO. 12 (B)
FB-30 F/B FUSE NO. 5 (IG)
*1 : TERMINAL No. OPTIONAL ARRANGEMENT AMONG 1, 2, 3, 4, 5 AND 6
*2 : TERMINAL No. OPTIONAL ARRANGEMENT AMONG 10, 11 AND 12
*3 : TERMINAL No. OPTIONAL ARRANGEMENT AMONG 7, 8, 9, 10, 11 AND 12
DATA LINK CONNECTOR
J/C i82
D VDC-03
E VDC-03
i10 COMBINATION METER
PARKING BRAKE/ BRAKE FLUID LEVEL WARNING LIGHT
SPEEDO-METER
I/F
MICRO COMPUTER
CAN TRANSCEIVER & RECEIVER
DRIVE CIRCUIT
VDC WARNING LIGHT/ VDC OPERATION INDICATOR LIGHT
VDC OFF INDICATOR
ABS WARNING LIGHT
REF. TO ENGINE ELECTRICAL SYSTEM [E/G(NA)-05] [E/G(TB)-06] [E/G(H6)-05]
REF. TO PARKING BRAKE / BRAKE FLUID LEVEL WARNING LIGHT SYSTEM [BR/W-01]
REF. TO CAN COMMUNICATION SYSTEM [CAN-02]
B40
B36
B310 VDC CM
i165
i1
i98
REF. TO GND [GND-03]

i82
i165
i98
B40
i10
B310 (BLACK)
B36

WI-25603

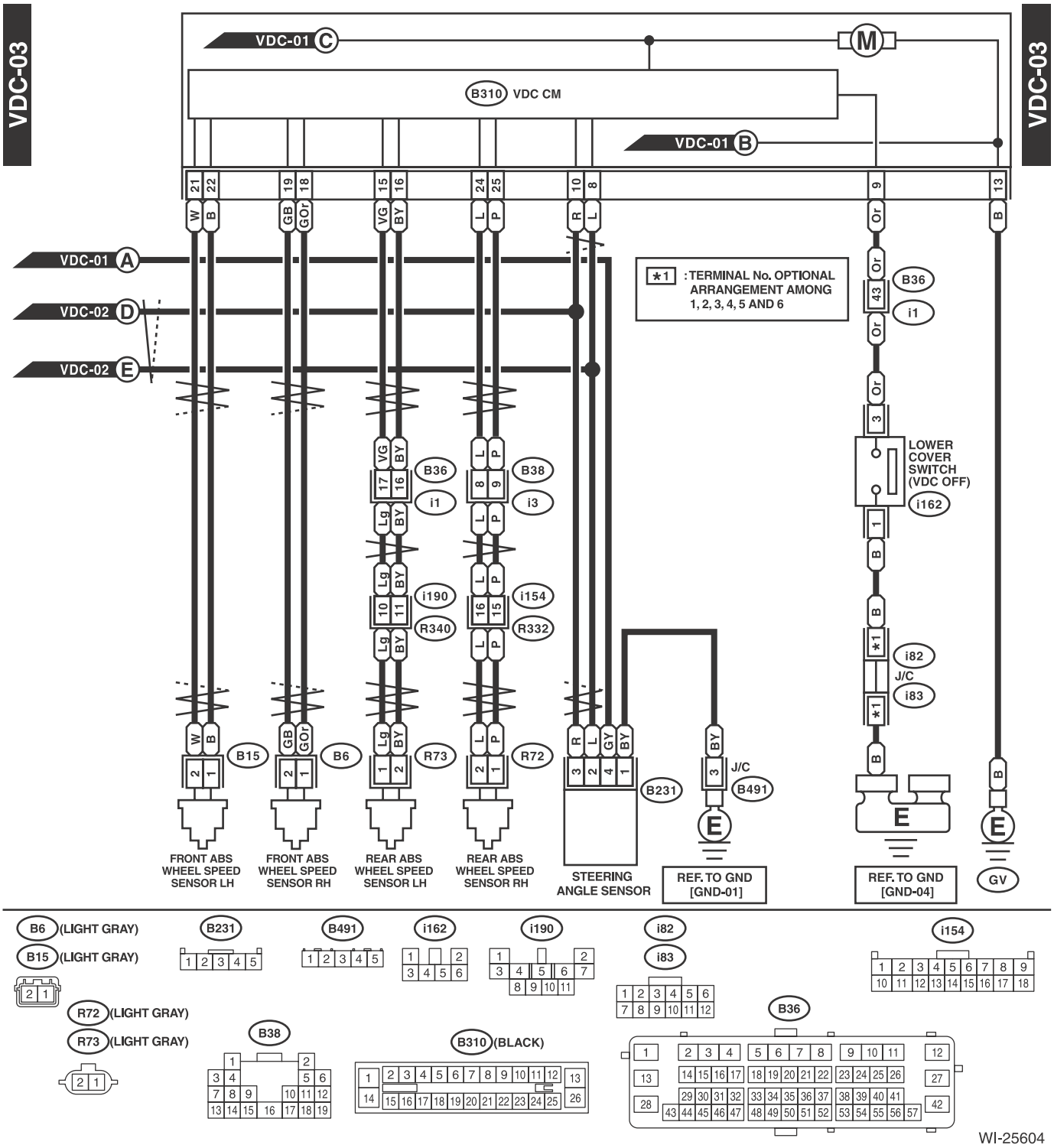
VDC-03
VDC-01 C
M
B310 VDC CM
VDC-01 B
VDC-01 A
VDC-02 D
VDC-02 E
*1 : TERMINAL No. OPTIONAL ARRANGEMENT AMONG 1, 2, 3, 4, 5 AND 6
B36
i1
B38
i3
i190
R340
i154
R332
B15
B6
R73
R72
B231
B491
J/C
i82
i83
LOWER COVER SWITCH (VDC OFF)
i162
FRONT ABS WHEEL SPEED SENSOR LH
FRONT ABS WHEEL SPEED SENSOR RH
REAR ABS WHEEL SPEED SENSOR LH
REAR ABS WHEEL SPEED SENSOR RH
STEERING ANGLE SENSOR
REF. TO GND [GND-01]
REF. TO GND [GND-04]
GV
B6 (LIGHT GRAY)
B15 (LIGHT GRAY)
R72 (LIGHT GRAY)
R73 (LIGHT GRAY)
B310 (BLACK)

WI-25604

53. Wiper Deicer System

A: WIRING DIAGRAM

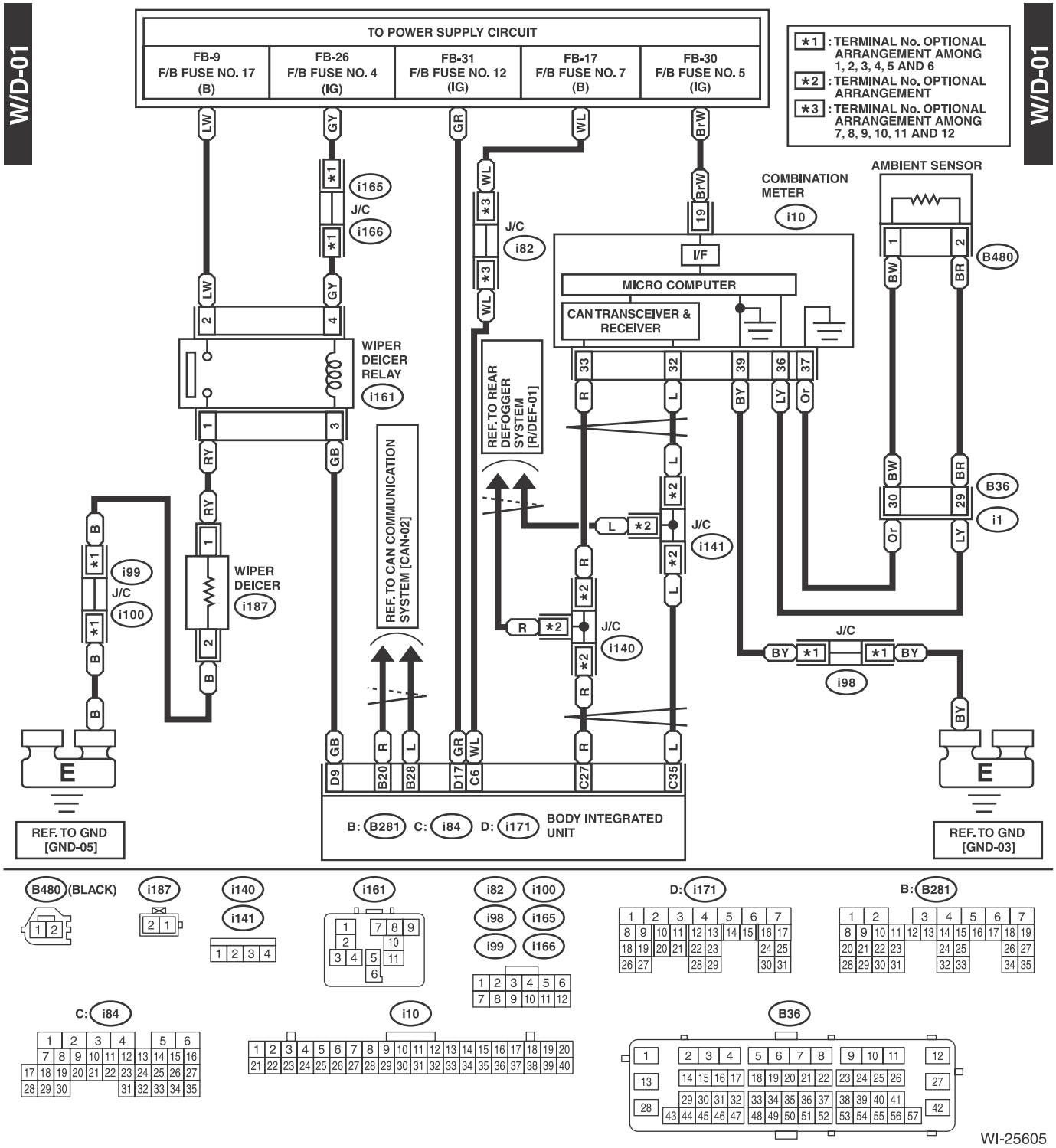

54.Harness Components Location

A: LOCATION

1. SEDAN MODEL

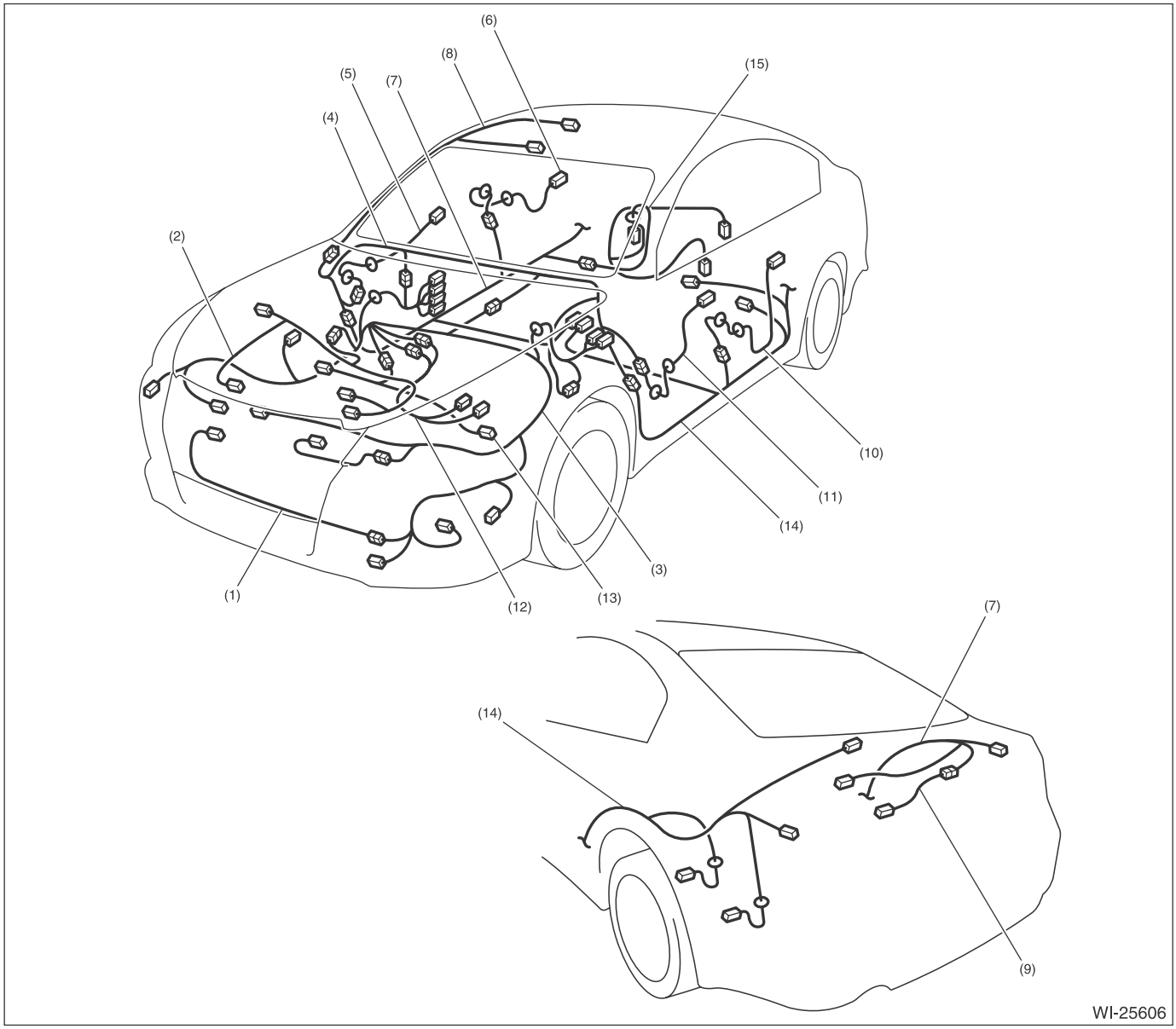

(1) Front wiring harness
(2) Engine wiring harness
(3) Bulkhead wiring harness
(4) Instrument panel wiring harness
(5) Front door cord RH
(6) Rear door cord RH
(7) Rear wiring harness RH
(8) Roof cord
(9) Trunk lid cord
(10) Rear door cord LH
(11) Front door cord LH
(12) Transmission cord
(13) Oxygen sensor cord
(14) Rear wiring harness LH
(15) Fuel cord

2. OUTBACK MODEL

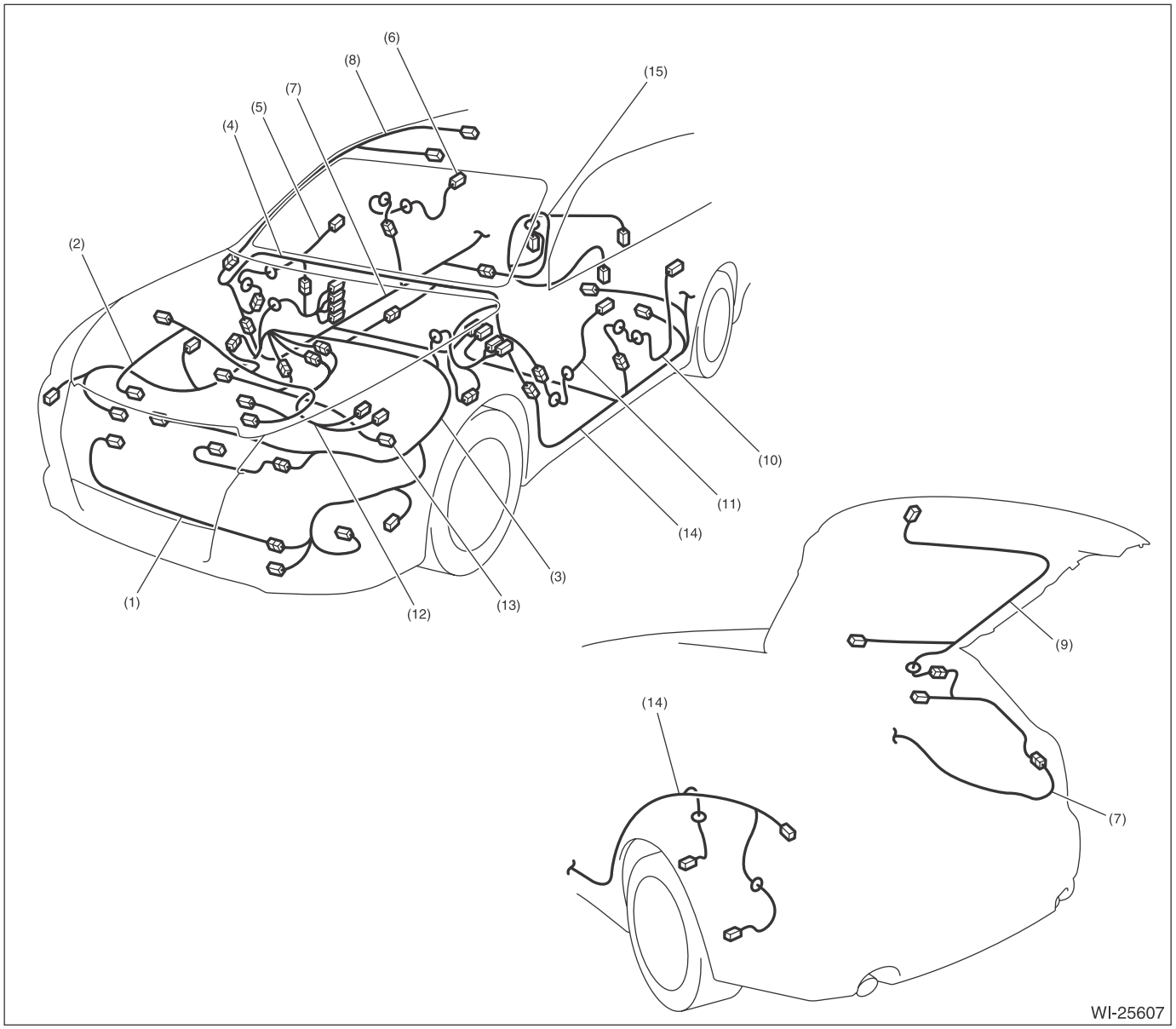

(1)	Front wiring harness	(6)	Rear door cord RH	(11)	Front door cord LH
(2)	Engine wiring harness	(7)	Rear wiring harness RH	(12)	Transmission cord
(3)	Bulkhead wiring harness	(8)	Roof cord	(13)	Oxygen sensor cord
(4)	Instrument panel wiring harness	(9)	Rear gate cord	(14)	Rear wiring harness LH
(5)	Front door cord RH	(10)	Rear door cord LH	(15)	Fuel cord

55.Front Wiring Harness

A: LOCATION

Connector				Connecting to	
No.	Pole	Color	Area	No.	Description
F106	3	Light gray	C-2		Radiator fan CM (3.6 L model)
F135	4	Black	C-2	B504	Bulkhead wiring harness (3.6 L model)

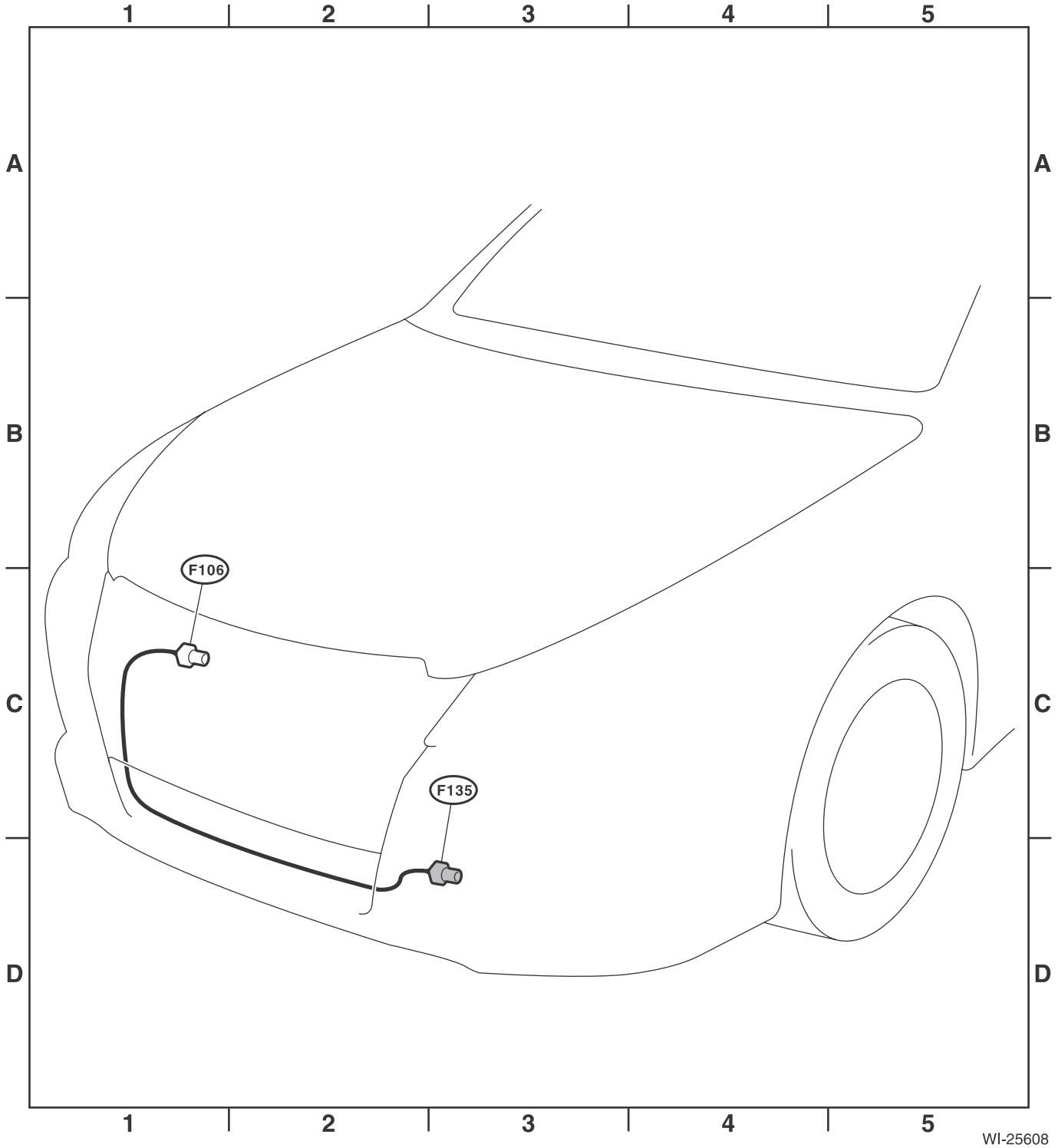

56.Bulkhead Wiring Harness (In Engine Compartment)

A: LOCATION

1. 2.5 L NON-TURBO MODEL

Connector				Connecting to	
No.	Pole	Color	Area	No.	Description
B3	5	Black	B-2		Mass air flow and intake air temperature sensor
B5	2	Light gray	C-5		Daytime running light resistor
B6	2	Light gray	B-2		Front ABS wheel speed sensor RH
B8	5	Light gray	B-5		Front wiper motor
B11	20	Light gray	B-3	T4	Transmission cord (CVT model)
B12	12	Light gray	B-3	T3	
B14	1	Black	B-3		Starter motor
B15	2	Light gray	B-4		Front ABS wheel speed sensor LH
B16	2	Light gray	B-4		Brake fluid level switch
B21	54	Black	B-3	E2	Engine wiring harness
B24	2	Light gray	B-3	T1	Transmission cord (MT model)
B25	2	Brown	B-3	T2	
B146	2	Dark gray	C-4		Front washer motor
B147	2	Dark gray	C-4		Rear washer motor
B310	26	Black	B-2		VDC CM
B321	2	★	A-2		Hood switch
B396	2	Brown	C-4		Washer fluid level sensor
B407	2	Black	C-4		Puddle light LH
B430	2	Black	B-2		Puddle light RH
B471	3	Light green	B-2		Generator
B473	2	Black	C-3		Main fan motor
B474	2	Brown	C-4		Front fog light LH
B477	8	Light gray	C-4		Front combination light LH
B478	5	★	C-4		J/C
B479	5	★	C-4		
B480	2	Black	C-2		Ambient sensor
B481	1	Black	C-2		Horn
B482	2	Black	C-1		Sub fan motor
B483	5	★	B-2		J/C
B487	8	Light gray	B-1		Front combination light RH
B488	2	Brown	B-1		Front fog light RH
B489	1	Black	B-1		Horn
B490	2	Black	B-1		Keyless buzzer
B497	22	Black	B-5		A/C relay holder
B505	3	Light gray	B-3		Pressure sensor
B506	2	Light gray	B-3		Compressor solenoid
B507	3	Black	C-3		Flow sensor
B515	1	★	B-2		Generator terminal B
★: White or natural color					

Connector				Connecting to	
No.	Pole	Color	Area	No.	Description
AB13	2	Yellow	C-3		Front sub sensor LH
AB16	2	Yellow	B-1		Front sub sensor RH

Bulkhead Wiring Harness (In Engine Compartment)

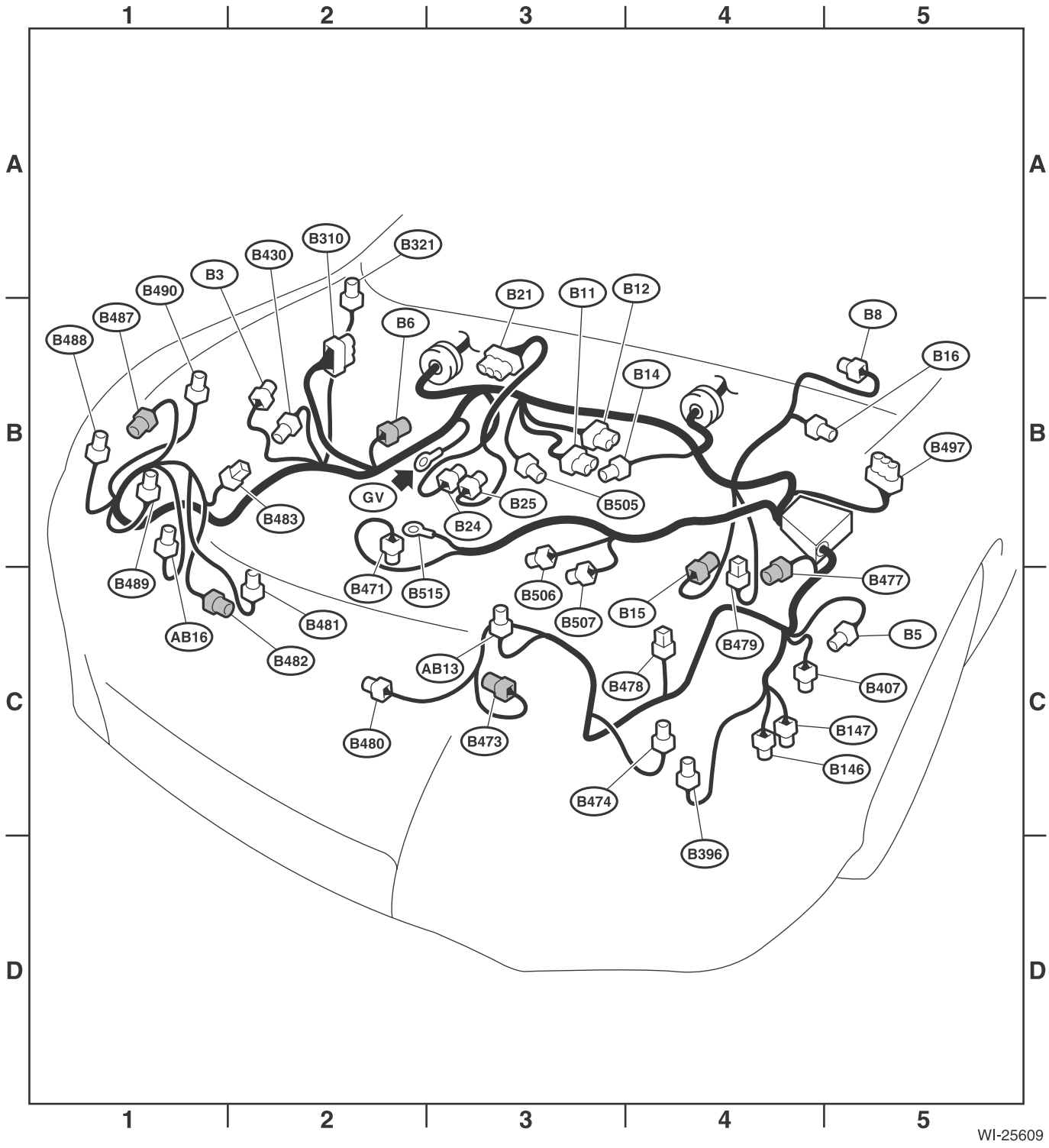

2. 2.5 L TURBO MODEL

Connector				Connecting to	
No.	Pole	Color	Area	No.	Description
B3	5	Black	B-2		Mass air flow and intake air temperature sensor
B5	2	Light gray	C-5		Daytime running light resistor
B6	2	Light gray	B-2		Front ABS wheel speed sensor RH
B8	5	Light gray	B-5		Front wiper motor
B14	1	Black	B-3		Starter motor
B15	2	Light gray	B-4		Front ABS wheel speed sensor LH
B16	2	Light gray	B-4		Brake fluid level switch
B21	54	Black	B-3	E2	Engine wiring harness
B22	16	★	B-3	E3	
B24	2	Light gray	B-3	T1	Transmission cord
B25	2	Brown	B-3	T2	
B146	2	Dark gray	C-4		Front washer motor
B147	2	Dark gray	C-4		Rear washer motor
B310	26	Black	B-2		VDC CM
B321	2	★	B-2		Hood switch
B396	2	Brown	C-4		Washer fluid level sensor
B407	2	Black	C-4		Puddle light LH
B430	2	Black	B-2		Puddle light RH
B471	3	Light green	B-2		Generator
B473	2	Dark gray	C-3		Main fan motor
B474	2	Brown	C-4		Front fog light LH
B477	8	Light gray	C-4		Front combination light LH
B478	5	★	C-4		J/C
B479	5	★	C-4		
B480	2	Black	C-2		Ambient sensor
B481	1	Black	C-2		Horn
B482	2	Dark gray	C-1		Sub fan motor
B483	5	★	B-2		J/C
B487	8	Light gray	B-1		Front combination light RH
B488	2	Brown	B-1		Front fog light RH
B489	1	Black	B-1		Horn
B490	2	Black	B-1		Keyless buzzer
B497	22	Black	B-5		A/C relay holder
B505	3	Light gray	B-3		Pressure sensor
B506	2	Light gray	B-3		Compressor solenoid
B507	3	Black	C-3		Flow sensor
B515	1	★	B-2		Generator terminal B
★: White or natural color					

Connector				Connecting to	
No.	Pole	Color	Area	No.	Description
AB13	2	Yellow	C-3		Front sub sensor LH
AB16	2	Yellow	B-1		Front sub sensor RH

Bulkhead Wiring Harness (In Engine Compartment)

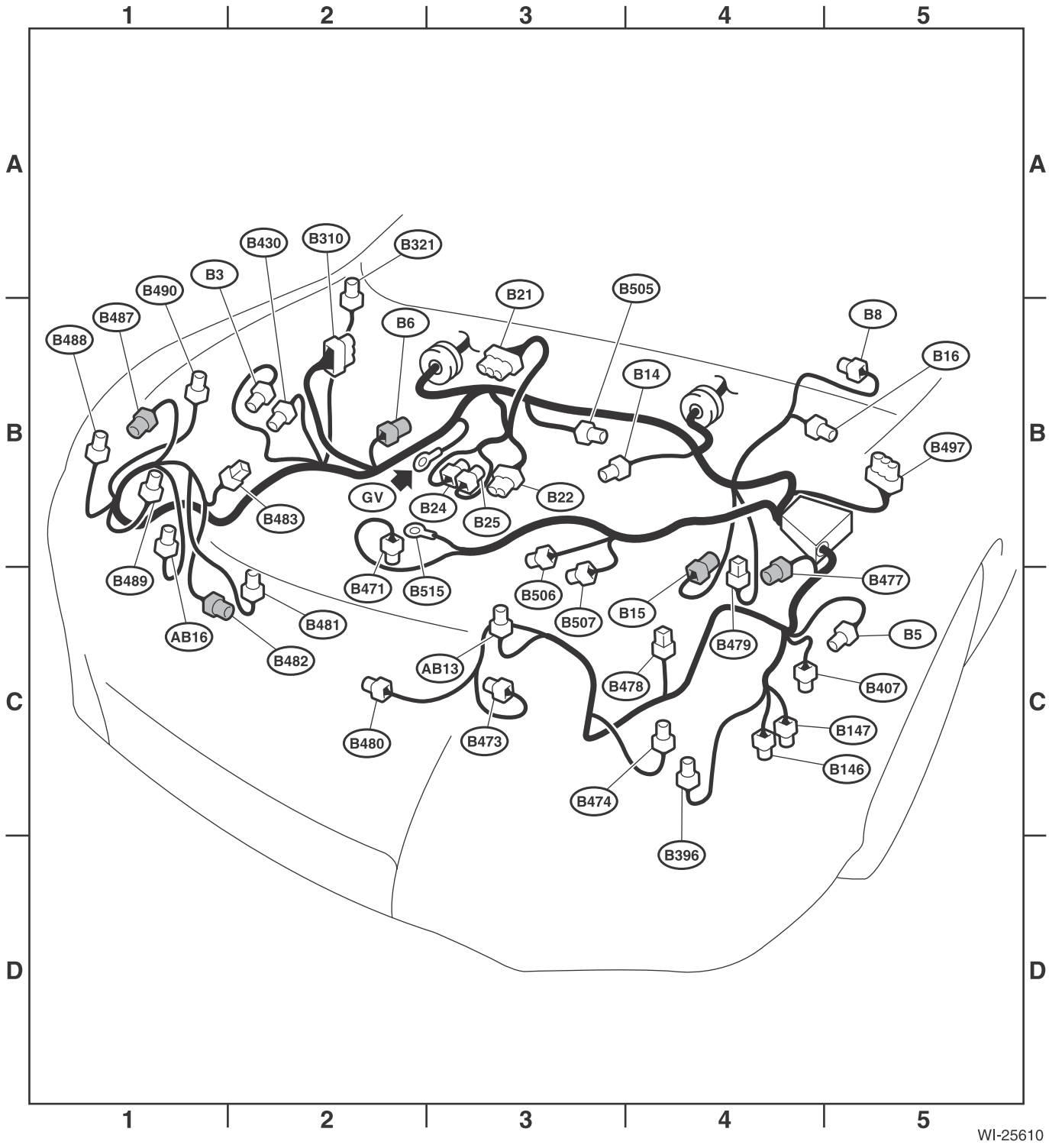

3. 3.6 L MODEL

Connector				Connecting to	
No.	Pole	Color	Area	No.	Description
B3	5	Black	B-2		Mass air flow and intake air temperature sensor
B5	2	Light gray	C-5		Daytime running light resistor
B6	2	Light gray	B-2		Front ABS wheel speed sensor RH
B8	5	Light gray	B-5		Front wiper motor
B11	20	Light gray	B-3	T4	Transmission cord
B12	8	Light gray	B-3	T3	
B14	1	Black	B-3		Starter motor
B15	2	Light gray	B-4		Front ABS wheel speed sensor LH
B16	2	Light gray	B-4		Brake fluid level switch
B21	54	Black	B-3	E2	Engine wiring harness
B22	16	★	B-3	E3	
B146	2	Dark gray	C-4		Front washer motor
B147	2	Dark gray	C-4		Rear washer motor
B310	26	Black	B-2		VDC CM
B321	2	★	B-2		Hood switch
B396	2	Brown	C-4		Washer fluid level sensor
B407	2	Black	C-4		Puddle light LH
B430	2	Black	B-2		Puddle light RH
B471	3	Light green	B-2		Generator
B474	2	Brown	C-4		Front fog light LH
B477	8	Light gray	C-4		Front combination light LH
B478	5	★	C-4		J/C
B479	5	★	C-4		
B480	2	Black	C-2		Ambient sensor
B481	1	Black	C-2		Horn
B483	5	★	B-2		J/C
B487	8	Light gray	B-1		Front combination light RH
B488	2	Brown	B-1		Front fog light RH
B489	1	Black	B-1		Horn
B490	2	Black	B-1		Keyless buzzer
B497	18	Black	B-5		A/C relay holder
B504	4	Black	C-3	F135	Front wiring harness
B505	3	Light gray	B-3		Pressure sensor
B506	2	Light gray	B-3		Compressor solenoid
B507	3	Black	C-3		Flow sensor
B515	1	★	B-2		Generator terminal B
★: White or natural color					

Connector				Connecting to	
No.	Pole	Color	Area	No.	Description
AB13	2	Yellow	C-3		Front sub sensor LH
AB16	2	Yellow	B-1		Front sub sensor RH

Bulkhead Wiring Harness (In Engine Compartment)

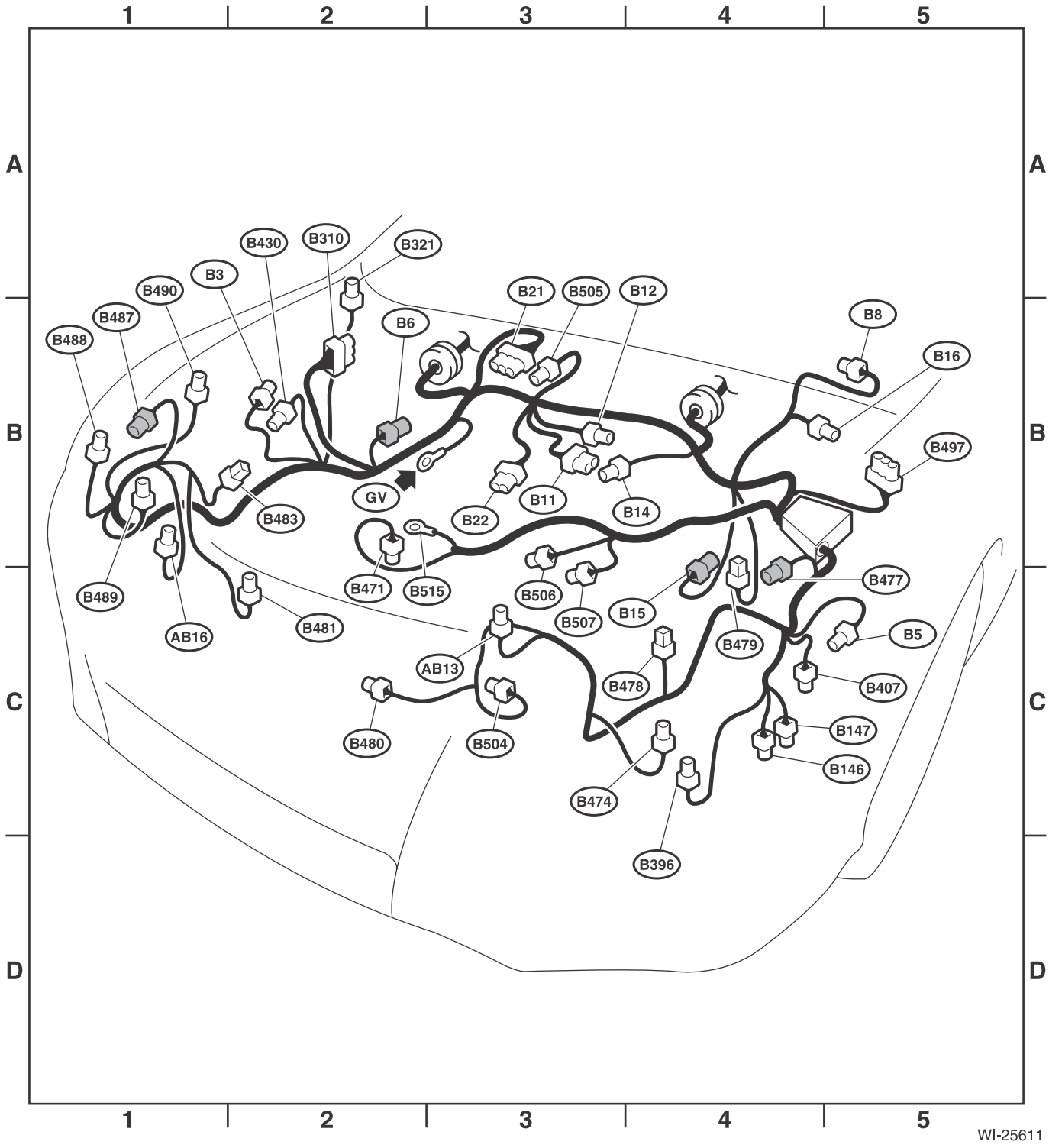

57.Bulkhead Wiring Harness (In Compartment)

A: LOCATION

1. 2.5 L NON-TURBO MODEL

Connector				Connecting to	
No.	Pole	Color	Area	No.	Description
B36	57	★	B-1	i1	Instrument panel wiring harness
B38	19	★	B-5	i3	
B40	16	★	B-1		Data link connector
B41	2	Blue	B-1		Power window circuit breaker
B52	24	★	C-1		F/B
B54	26	Green	B-2		TCM
B55	22	Green	C-2		
B65	4	Black	B-2		Stop light & brake switch
B68	16	★	C-2		Roll connector
B70	18	★	C-2		Combination switch
B71	14	★	C-2		
B72	6	★	B-2		Ignition switch
B83	8	★	B-5		J/C
B107	2	Blue	B-2		Clutch switch (model with cruise control)
B116	8	★	C-3		AT select lever
B134	34	★	B-4		ECM
B135	35	★	B-4		
B136	35	★	B-4		
B137	31	★	C-4		
B138	8	★	B-5		J/C
B152	10	Gray	C-1		F/B
B158	8	★	C-2		
B159	9	Brown	C-2		
B180	4	★	C-1		Remote engine start CM
B220	21	★	B-5		IG relay
					Fuel pump relay
					Main relay
					A/F, oxygen sensor relay
					Electronic throttle control relay
B231	5	★	C-2		Steering angle sensor
B280	34	★	B-2		Body integrated unit
B281	35	★	B-2		
B315	6	Black	B-3		Accelerator pedal position sensor
B350	6	Light gray	C-3		Key warning switch and key lock solenoid
B358	2	★	C-3		AT select lever illumination
B415	2	★	C-3		Immobilizer antenna
B491	5	★	B-1		J/C
B493	4	Black	C-2		Starter relay
B494	4	Black	C-1		Self shut relay
B495	10	Gray	C-4	AB1	Airbag wiring harness
B501	5	★	B-2		Clutch stroke sensor (MT model)
B503	8	★	C-5		J/C
B512	8	★	B-2		J/C
B513	2	Blue	B-3		Stop light condenser

Bulkhead Wiring Harness (In Compartment)

Connector				Connecting to	
No.	Pole	Color	Area	No.	Description
B514	2	Blue	B-3		Stop light register
B516	2	★	B-1	B517	Bulkhead wiring harness
B517	2	★	B-1	B516	
B518	20	★	B-4		Security CM
★: White or natural color					

Connector				Connecting to	
No.	Pole	Color	Area	No.	Description
AB1	10	Gray	C-4	B495	Bulkhead wiring harness
AB2	4	Yellow	C-2	AB7	Driver's airbag module
AB6	30	Yellow	D-4		Airbag CM
AB9	4	Yellow	C-3		Passenger's airbag module
AB35	2	★	C-1		F/B
★: White or natural color					

Bulkhead Wiring Harness (In Compartment)

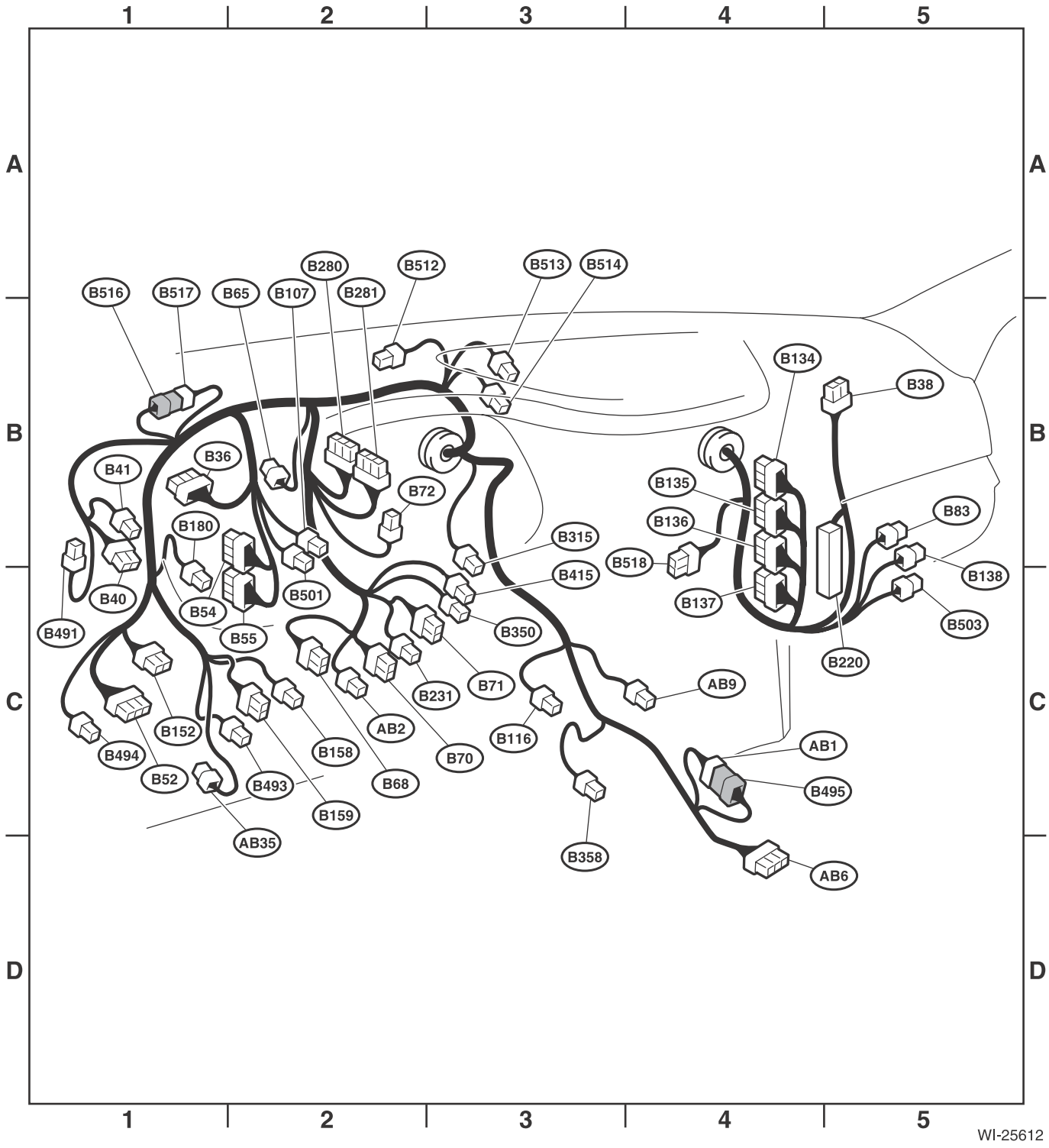

2. 2.5 L TURBO MODEL

Connector				Connecting to	
No.	Pole	Color	Area	No.	Description
B36	57	★	B-1	i1	Instrument panel wiring harness
B38	19	★	B-5	i3	
B40	16	★	B-1		Data link connector
B41	2	Blue	B-1		Power window circuit breaker
B52	24	★	C-1		F/B
B65	4	Black	B-2		Stop light & brake switch
B68	16	★	C-2		Roll connector
B70	18	★	C-2		Combination switch
B71	14	★	C-2		
B72	6	★	B-2		Ignition switch
B83	8	★	B-5		J/C
B107	2	Blue	C-2		Clutch switch (model with cruise control)
B134	34	★	B-4		ECM
B135	35	★	B-4		
B136	35	★	B-4		
B137	31	★	C-4		
B138	8	★	B-5		J/C
B152	10	Gray	C-1		F/B
B158	8	★	C-2		
B159	9	Brown	C-2		
B180	4	★	C-1		Remote engine start CM
B220	21	★	B-5		Fuel pump relay
					Main relay
					A/F, oxygen sensor relay
					Electronic throttle control relay
B231	5	★	C-2		Steering angle sensor
B280	34	★	B-2		Body integrated unit
B281	35	★	B-2		
B315	6	Black	B-3		Accelerator pedal position sensor
B350	6	Light gray	C-3		Key warning switch and key lock solenoid
B415	2	★	C-3		Immobilizer antenna
B491	5	★	B-1		J/C
B493	4	Black	C-2		Starter relay
B495	10	Gray	C-4	AB1	Airbag wiring harness
B501	5	★	B-2		Clutch stroke sensor
B503	8	★	C-5		J/C
B512	8	★	B-2		
B513	2	Blue	B-3		Stop light condenser
B514	2	Blue	B-3		Stop light register
B516	2	★	B-1	B517	Bulkhead wiring harness
B517	2	★	B-1	B516	
B518	20	★	B-4		Security CM
★: White or natural color					

Bulkhead Wiring Harness (In Compartment)

Connector				Connecting to	
No.	Pole	Color	Area	No.	Description
AB1	10	Gray	C-4	B495	Bulkhead wiring harness
AB2	4	Yellow	C-2	AB7	Driver's airbag module
AB6	30	Yellow	D-4		Airbag CM
AB9	4	Yellow	C-4		Passenger's airbag module
AB35	2	★	C-1		F/B
★: White or natural color					

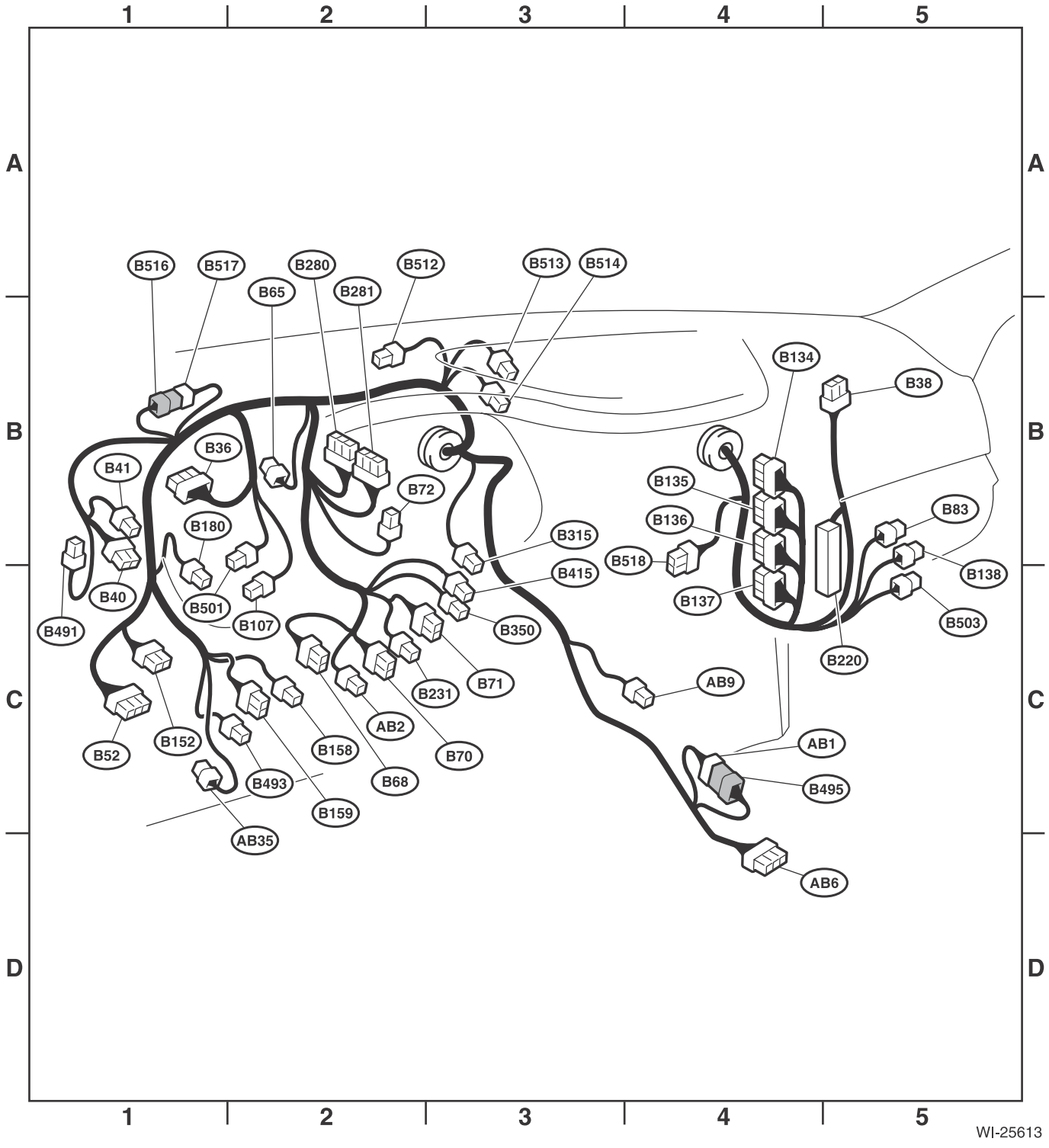

3. 3.6 L MODEL

Connector				Connecting to	
No.	Pole	Color	Area	No.	Description
B36	57	★	B-1	i1	Instrument panel wiring harness
B38	19	★	B-5	i3	
B40	16	★	B-1		Data link connector
B41	2	Blue	B-1		Power window circuit breaker
B52	24	★	C-1		F/B
B54	35	★	B-2		TCM
B55	35	★	C-2		
B65	4	Black	B-2		Stop light & brake switch
B68	16	★	C-2		Roll connector
B70	18	★	C-2		Combination switch
B71	14	★	C-2		
B72	6	★	B-2		Ignition switch
B83	8	★	B-5		J/C
B116	8	★	C-3		AT select lever
B134	34	★	B-4		ECM
B135	35	★	B-4		
B136	35	★	B-4		
B137	31	★	C-4		
B138	8	★	B-5		J/C
B152	10	Gray	C-1		F/B
B158	8	★	C-2		
B159	9	Brown	C-2		
B180	4	★	C-1		Remote engine start CM
B220	21	★	B-5		IG relay
					Fuel pump relay
					Main relay
					A/F, oxygen sensor relay
					Electronic throttle control relay
B231	5	★	C-2		Steering angle sensor
B280	34	★	B-2		Body integrated unit
B281	35	★	B-2		
B315	6	Black	B-3		Accelerator pedal position sensor
B350	6	Light gray	C-3		Key warning switch and key lock solenoid
B358	2	★	C-3		AT select lever illumination
B415	2	★	C-3		Immobilizer antenna
B491	5	★	B-1		J/C
B493	4	Black	C-2		Starter relay
B495	10	Gray	C-4	AB1	Airbag wiring harness
B498	4	Black	C-1		Inhibitor relay
B499	4	Black	C-1		Back-up light relay
B503	8	★	C-5		J/C
B512	8	★	B-2		
B513	2	Blue	B-3		Stop light condenser
B514	2	Blue	B-3		Stop light register
B516	2	★	B-1	B517	Bulkhead wiring harness
B517	2	★	B-1	B516	
B518	20	★	B-4		Security CM

★: White or natural color

Bulkhead Wiring Harness (In Compartment)

Connector				Connecting to	
No.	Pole	Color	Area	No.	Description
AB1	10	Gray	C-4	B495	Bulkhead wiring harness
AB2	4	Yellow	C-2	AB7	Driver's airbag module
AB6	30	Yellow	D-4		Airbag CM
AB9	4	Yellow	C-4		Passenger's airbag module
AB35	2	★	C-1		F/B
★: White or natural color					

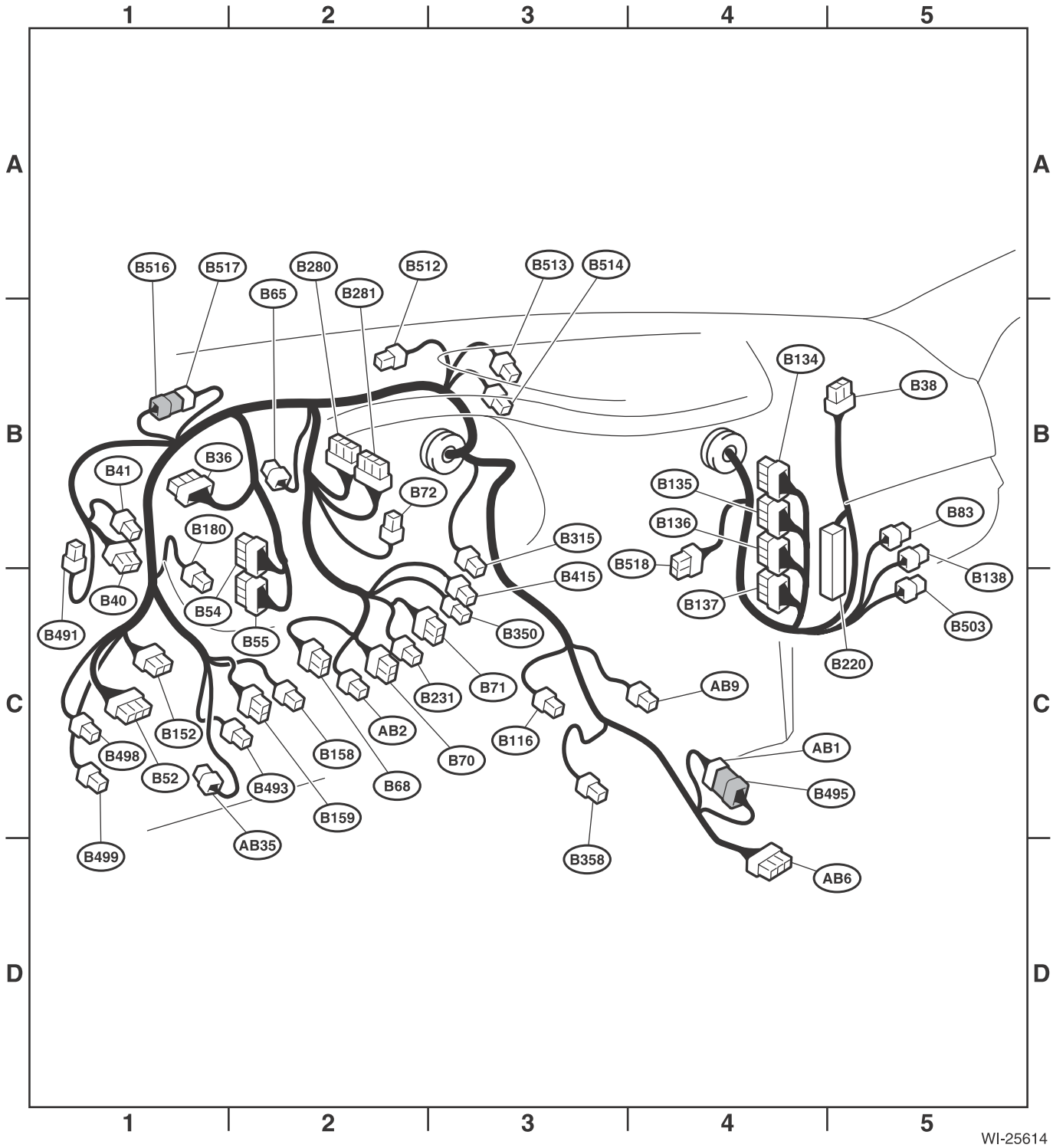

58.Engine Wiring Harness and Transmission Cord

A: LOCATION

1. 2.5 L NON-TURBO MODEL

Connector				Connecting to	
No.	Pole	Color	Area	No.	Description
E2	54	Black	A-2	B21	Bulkhead wiring harness
E4	2	Black	B-3		Purge control solenoid valve
E5	2	Dark gray	B-1		Fuel injector No. 1
E6	2	Dark gray	A-2		Fuel injector No. 3
E8	2	Black	B-2		Engine coolant temperature sensor
E10	2	Light gray	B-3		Crankshaft position sensor
E11	1	Light gray	B-2		Oil pressure switch
E14	2	Black	A-4		Knock sensor
E15	2	Black	B-4		Camshaft position sensor
E16	2	Dark gray	B-4		Fuel injector No. 2
E17	2	Dark gray	B-4		Fuel injector No. 4
E18	6	Dark gray	A-4		EGR valve
E19	1	★	B-2		Power steering oil pressure switch
E21	3	Black	A-3		Manifold absolute pressure sensor
E24	4	Black	B-1		Front oxygen (A/F) sensor
E25	4	Dark gray	B-1		Rear oxygen sensor
E31	3	★	B-1		Ignition coil No. 1
E32	3	★	B-4		Ignition coil No. 2
E33	3	Black	A-2		Ignition coil No. 3
E34	3	Black	B-5		Ignition coil No. 4
E57	6	Black	A-3		Electronic throttle control
E69	2	Blue	A-2		Oil switching solenoid valve RH
E70	2	Blue	B-4		Oil switching solenoid valve LH
E71	1	★	B-2		Variable valve lift diagnosis oil pressure switch RH
E72	1	★	B-4		Variable valve lift diagnosis oil pressure switch LH
E75	2	Black	A-3		Oil temperature sensor
E130	1	★	B-5		Oil level switch
★: White or natural color					

- **MT model**

Connector				Connecting to	
No.	Pole	Color	Area	No.	Description
T1	2	★	C-1	B24	Bulkhead wiring harness
T2	2	Brown	C-1	B25	
★: White or natural color					

- **CVT model**

Connector				Connecting to	
No.	Pole	Color	Area	No.	Description
T3	12	Black	D-4	B12	Bulkhead wiring harness
T4	20	Gray	D-4	B11	
T7	9	Black	D-4		Inhibitor switch
AT1	3	Gray	D-4		Primary speed sensor
AT4	3	Black	D-5		Secondary speed sensor
AT5	3	Gray	D-5		Front wheel speed sensor
AT6	3	Black	D-4		Secondary pressure sensor

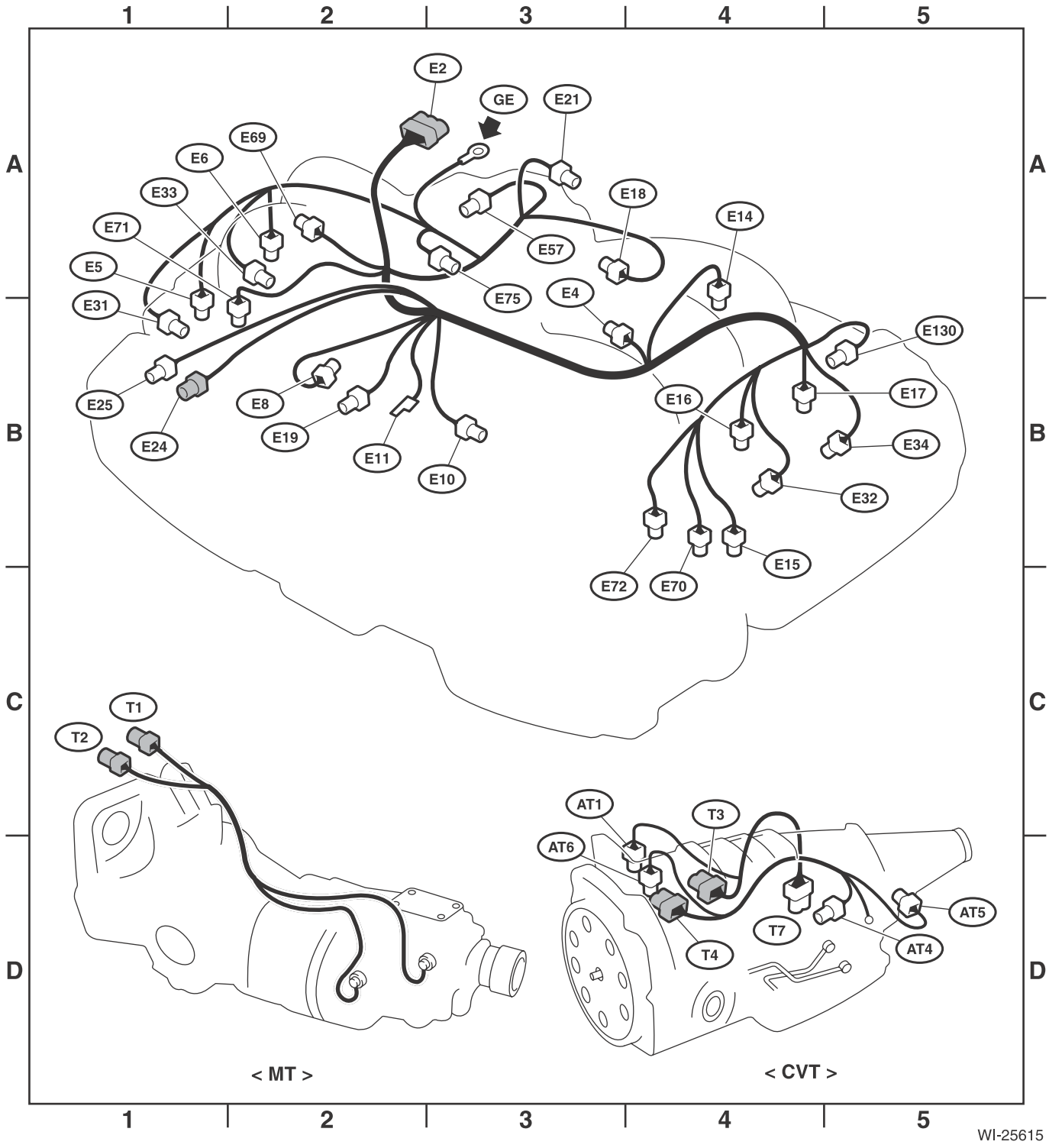
1
2
3
4
5
A
B
C
D
E2
GE
E21
E69
E6
E33
E71
E5
E31
E18
E14
E57
E75
E4
E130
E25
E8
E16
E17
E24
E19
E11
E10
E34
E32
E15
E72
E70
T1
T2
AT1
T3
AT6
AT5
T7
T4
AT4
< MT >
< CVT >
WI-25615

2. 2.5 L TURBO MODEL

Connector				Connecting to	
No.	Pole	Color	Area	No.	Description
E2	54	Black	A-3	B21	Bulkhead wiring harness
E3	16	Brown	A-3	B22	
E4	2	Black	B-3		Purge control solenoid valve 1
E5	2	Dark gray	A-1		Fuel injector No. 1
E6	2	Dark gray	A-2		Fuel injector No. 3
E8	2	Black	B-3		Engine coolant temperature sensor
E10	2	Light gray	B-2		Crankshaft position sensor
E11	1	Light gray	B-3		Oil pressure switch
E14	2	Black	B-4		Knock sensor
E16	2	Dark gray	B-4		Fuel injector No. 2
E17	2	Dark gray	B-4		Fuel injector No. 4
E19	1	★	B-2		Power steering oil pressure switch
E21	3	Black	B-2		Manifold absolute pressure sensor
E24	4	Light gray	B-4		Front oxygen (A/F) sensor
E25	4	Black	B-4		Rear oxygen sensor
E31	3	Gray	B-1		Ignition coil No. 1
E32	3	Gray	B-4		Ignition coil No. 2
E33	3	Gray	B-2		Ignition coil No. 3
E34	3	Gray	B-4		Ignition coil No. 4
E35	3	Black	B-4		Intake camshaft position sensor LH
E36	3	Black	A-2		Intake camshaft position sensor RH
E37	2	Blue	B-4		Intake oil flow control solenoid valve LH
E38	2	Blue	A-2		Intake oil flow control solenoid valve RH
E51	5	Light gray	B-5		Tumble generator valve assembly LH
E52	2	Black	A-3		Purge control solenoid valve 2
E55	5	Light gray	B-1		Tumble generator valve assembly RH
E57	6	Black	A-4		Electronic throttle control
E62	3	Light gray	B-1		Exhaust camshaft position sensor RH
E63	2	Blue	B-1		Exhaust oil flow control solenoid valve RH
E64	2	Black	B-1		Wastegate control solenoid valve
E65	3	Light gray	C-4		Exhaust camshaft position sensor LH
E66	2	Blue	C-4		Exhaust oil flow control solenoid valve LH
E130	1	★	B-5		Oil level switch
★: White or natural color					

Connector				Connecting to	
No.	Pole	Color	Area	No.	Description
T1	2	★	C-2	B24	Bulkhead wiring harness
T2	2	Brown	C-2	B25	
★: White or natural color					

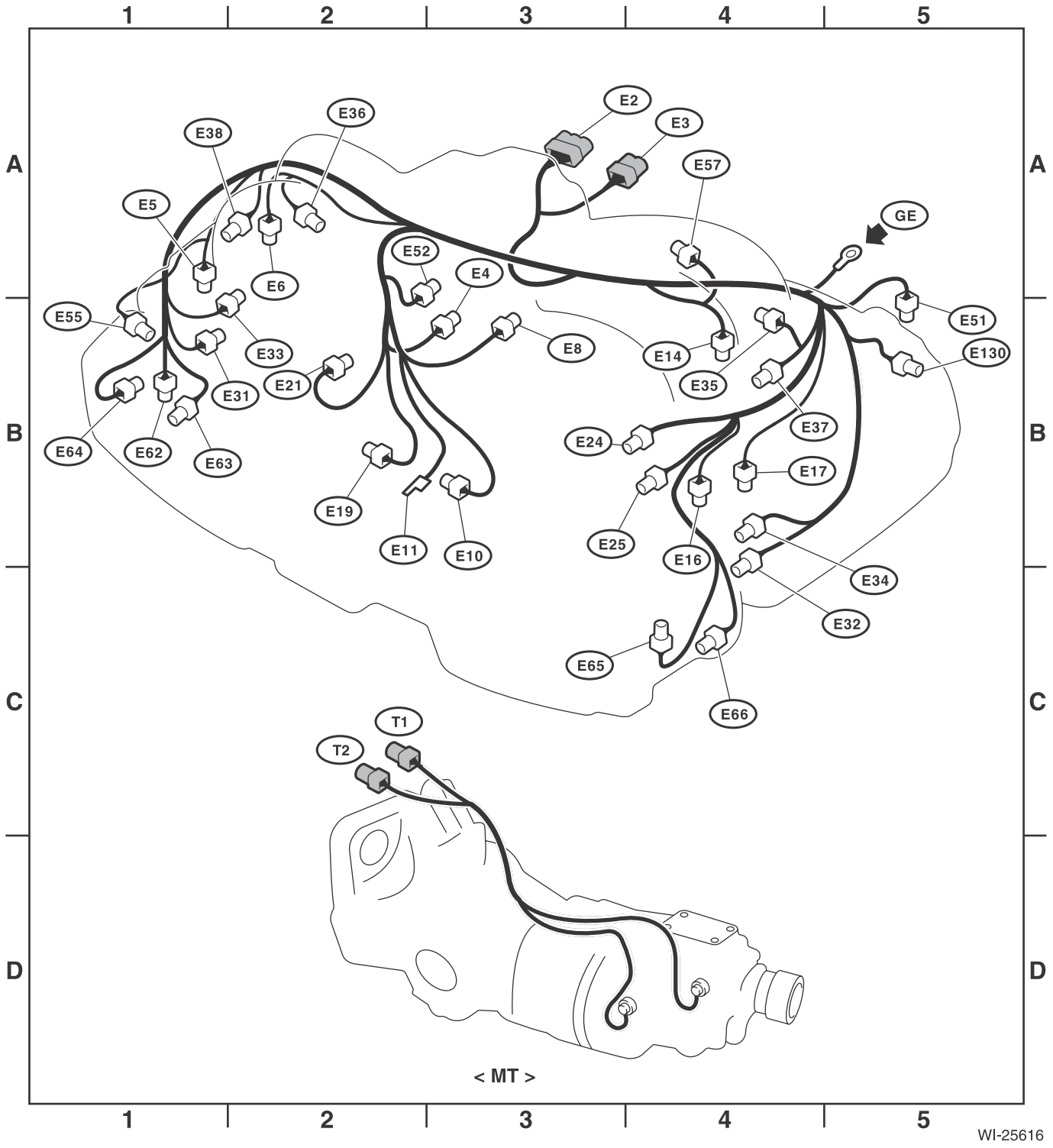
1
2
3
4
5
A
B
C
D
E2
E3
E36
E38
E57
E5
GE
E52
E4
E6
E55
E51
E130
E33
E8
E14
E35
E21
E31
E37
E24
E64
E62
E63
E17
E19
E25
E11
E10
E16
E34
E32
E65
E66
T1
T2
< MT >

WI-25616

3. 3.6 L MODEL

Connector				Connecting to	
No.	Pole	Color	Area	No.	Description
E2	54	Black	A-3	B21	Bulkhead wiring harness
E3	16	Brown	D-2	B22	
E4	2	Blue	A-2		Purge control solenoid valve
E5	2	Dark gray	A-2		Fuel injector No. 1
E6	2	Dark gray	A-2		Fuel injector No. 3
E8	2	Brown	B-4		Engine coolant temperature sensor
E10	2	Light gray	B-4		Crankshaft position sensor
E11	1	★	B-1		Oil pressure switch
E14	2	Blue	B-2		Knock sensor 1
E16	2	Dark gray	B-4		Fuel injector No. 2
E17	2	Dark gray	B-4		Fuel injector No. 4
E18	6	Dark gray	B-3		EGR valve
E19	1	★	B-2		Power steering oil pressure switch
E21	3	Black	A-3		Manifold absolute pressure sensor
E24	4	Light gray	D-3		Front oxygen (A/F) sensor LH
E25	4	Dark gray	D-3		Rear oxygen sensor LH
E31	3	Gray	B-1		Ignition coil No. 1
E32	3	Gray	C-4		Ignition coil No. 2
E33	3	Gray	B-2		Ignition coil No. 3
E34	3	Gray	B-4		Ignition coil No. 4
E35	3	Black	B-5		Intake camshaft position sensor LH
E36	3	Black	A-2		Intake camshaft position sensor RH
E37	2	Black	B-4		Intake oil flow control solenoid valve LH
E38	2	Black	B-1		Intake oil flow control solenoid valve RH
E43	2	Dark gray	A-2		Fuel injector No. 5
E44	2	Dark gray	B-5		Fuel injector No. 6
E45	3	Gray	B-2		Ignition coil No. 5
E46	3	Gray	B-5		Ignition coil No. 6
E47	4	Light gray	C-2		Front oxygen (A/F) sensor RH
E48	2	Blue	A-4		Knock sensor 2
E57	6	Black	A-3		Electronic throttle control
E61	4	Dark gray	C-2		Rear oxygen sensor RH
E62	3	Gray	B-1		Exhaust camshaft position sensor RH
E63	2	Blue	B-1		Exhaust oil flow control solenoid valve RH
E65	3	Gray	C-4		Exhaust camshaft position sensor LH
E66	2	Blue	C-4		Exhaust oil flow control solenoid valve LH
E75	2	Black	B-4		Oil temperature sensor
E76	10	Dark gray	A-3	E77	Engine wiring harness
E77	10	Gray	A-3	E76	
E130	1	★	C-4		Oil level switch
★: White or natural color					

- **AT model**

Connector				Connecting to	
No.	Pole	Color	Area	No.	Description
T3	8	Light gray	D-2	B12	Bulkhead wiring harness
T4	20	Gray	D-2	B11	
AT1	3	Black	D-3		Turbine speed sensor 1
AT4	3	Black	C-4		Rear vehicle speed sensor

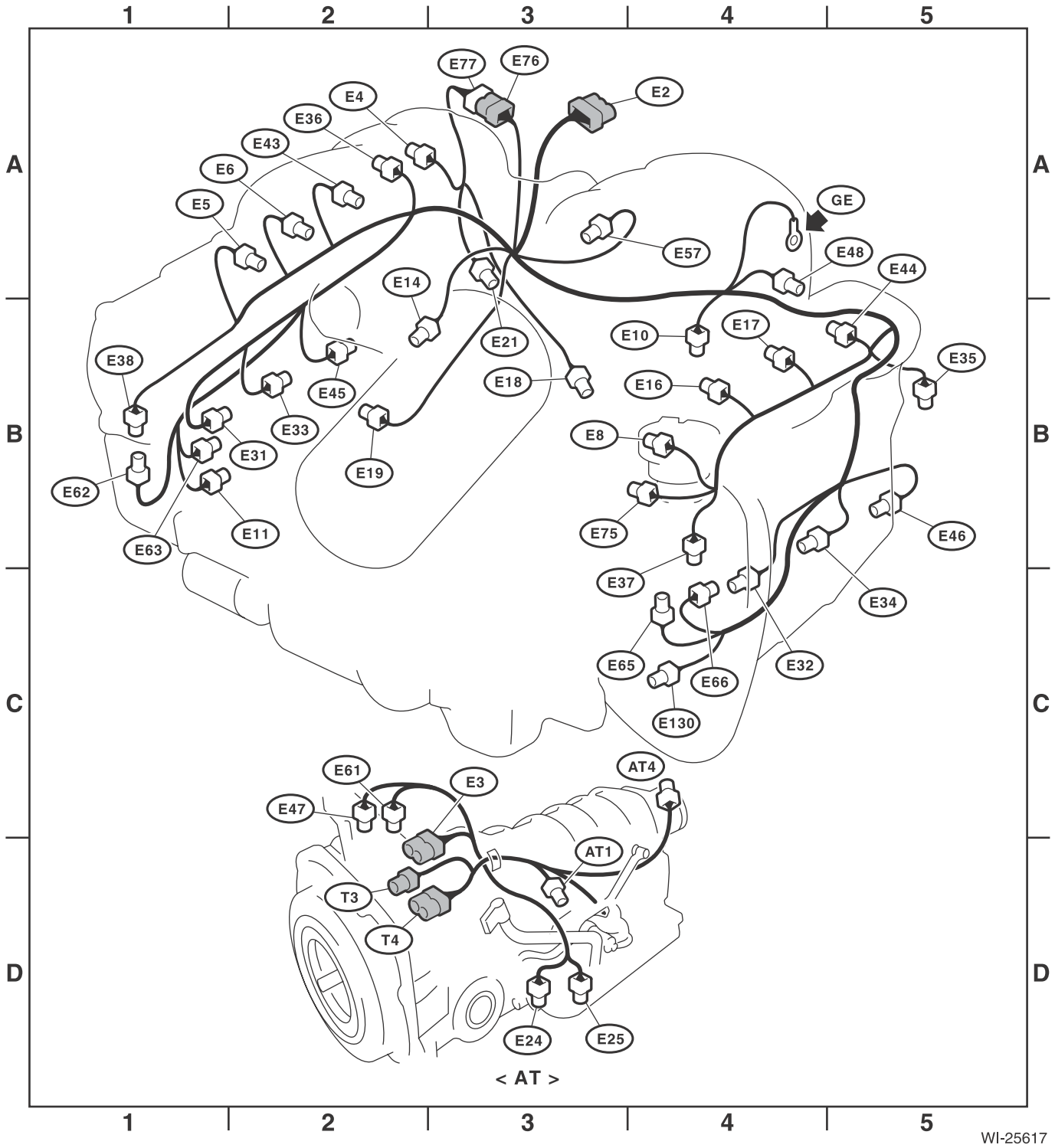

59.Instrument Panel Wiring Harness

A: LOCATION

Connector				Connecting to	
No.	Pole	Color	Area	No.	Description
i1	57	★	B-1	B36	Bulkhead wiring harness
i2	18	★	C-1	R339	Rear wiring harness LH
i3	19	★	B-4	B38	Bulkhead wiring harness
i5	20	★	C-1		F/B
i6	16	★	C-2		Remote control mirror switch
i10	40	★	B-2		Combination meter
i15	6	★	C-3		Blower fan switch
i23	2	★	B-4		Glove box light
i24	2	★	B-3		Front accessory power supply socket
i26	20	★	B-3		Audio
i29	1	★	B-3		Audio bracket ground (with navigation system)
	1	★	B-2		Audio bracket ground (without navigation system)
i53	14	★	C-5	R98	Rear wiring harness RH
i54	13	★	C-1	R99	Rear wiring harness LH
i59	10	★	B-3		Clock
i76	28	★	C-5	D83	Front door cord RH
i79	6	★	B-2		Illumination control switch
i80	26	★	C-4		A/C CM
i82	12	★	B-1		J/C
i83	12	★	B-1		
i84	35	★	C-2		Body integrated unit
i88	12	★	C-4		A/C control panel
i97	12	★	B-4		J/C
i98	12	★	B-4		
i99	12	★	B-4		
i100	12	★	B-4		
i101	28	★	C-1	D84	Front door cord LH
i102	14	★	C-1	R167	Rear wiring harness LH
i131	24	★	B-3		Navigation unit
	24	★	B-3		Audio
i140	4	★	B-3		J/C
i141	4	★	B-3		
i144	20	★	B-3		Navigation unit
i145	6	Green	B-3		
i146	8	★	B-3		
i149	6	★	C-3		AUX input terminal
i152	20	★	C-1		F/B
i153	16	★	C-5	R331	Rear wiring harness RH
i154	18	★	C-5	R332	
i155	11	★	C-5	R333	
i156	5	★	C-2		Hill hold switch
i157	16	★	A-5	R50	Roof cord
i158	4	★	B-1		Side tweeter LH (normal audio)
	2	★	B-1		Side tweeter LH
i159	4	★	B-5		Side tweeter RH (normal audio)
	2	★	B-5		Side tweeter RH

Connector				Connecting to	
No.	Pole	Color	Area	No.	Description
i160	11	★	B-1		Relay block
i161	11	★	B-2		
i162	6	★	C-1		Lower cover switch
i163	10	★	C-2		EPB control switch
i164	12	★	B-2		J/C
i165	12	★	B-1		
i166	12	★	B-1		
i167	12	★	B-2		
i168	12	★	B-2		
i169	22	★	B-5		
i170	8	★	B-2		Turn signal and hazard unit
i171	31	★	C-2		Body integrated unit
i172	2	★	B-2		Evaporator sensor
i173	2	★	C-3		In-vehicle sensor
i174	7	Green	B-3		Air mix door actuator (manual A/C)
	7	Green	B-3		Air mix door actuator (driver's seat) (auto A/C)
i175	7	Green	B-4		Air mix door actuator (passenger's seat) (auto A/C)
i176	5	★	B-3		Mode door actuator
i181	24	★	C-4		A/C CM
i182	4	★	B-4		Blower resistor
i183	5	★	B-4		Power transistor (auto A/C)
i184	7	★	B-4		Blower motor relay
i185	2	★	C-5		Blower motor
i186	7	Green	B-4		Intake door actuator
i187	2	★	A-5		Wiper deicer
i188	8	★	B-5		Impact sensor
i189	2	★	C-4		Rear accessory power supply socket (console box)
i190	11	★	C-1	R340	Rear wiring harness LH
i191	2	★	B-4		Trunk opener cancel button
i192	8	★	A-3		Audio (premium)
i193	2	Black	C-1		F/B
i194	6	★	B-5		Light control sensor
i195	4	★	C-5	R382	Rear wiring harness RH
i196	10	★	C-3	R385	Adapter cord (audio amplifier)
★: White or natural color					

Instrument Panel Wiring Harness

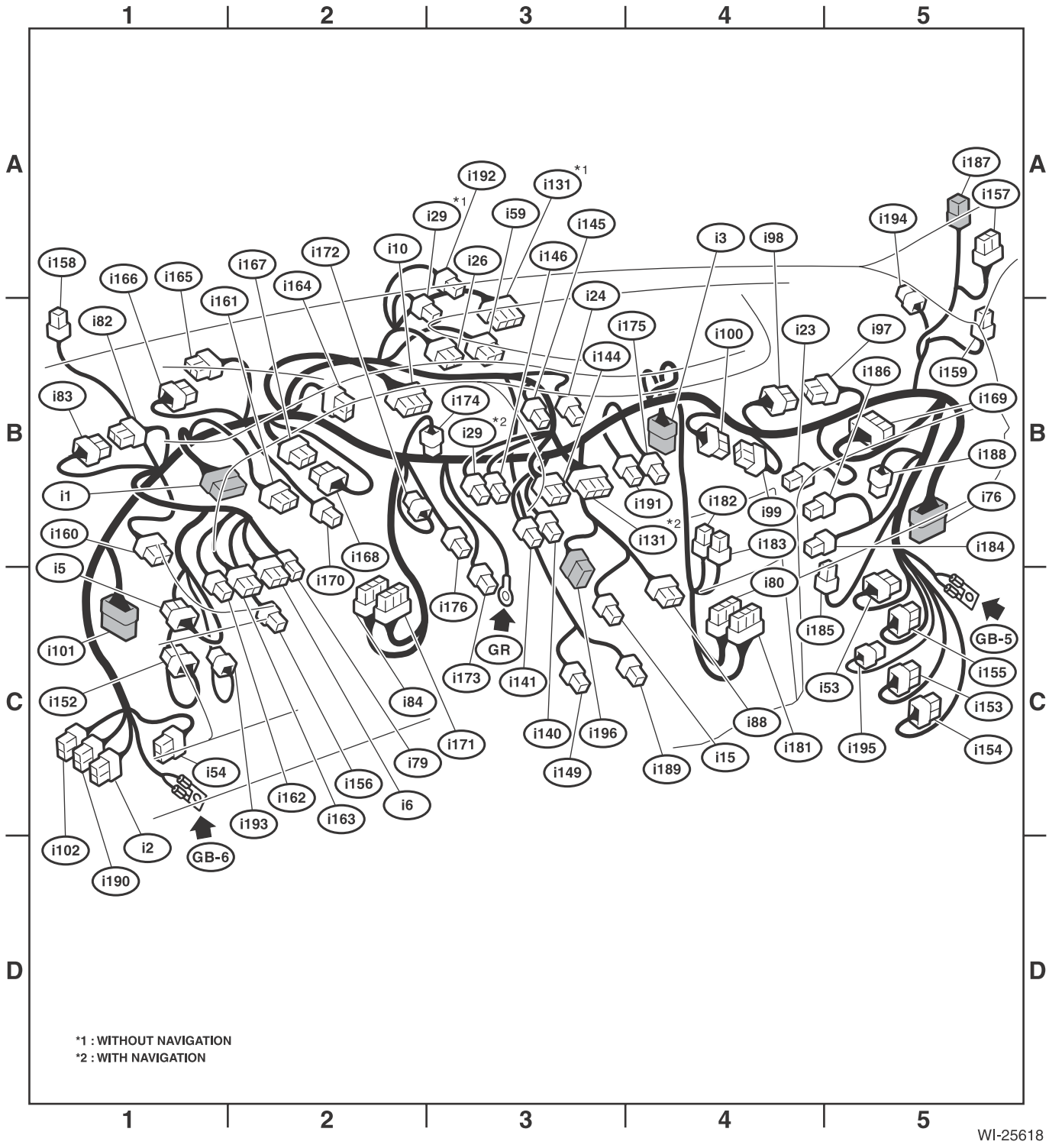

60.Rear Wiring Harness

A: LOCATION

1. SEDAN MODEL

Connector				Connecting to	
No.	Pole	Color	Area	No.	Description
R9	3	★	C-4		Front door switch LH
R10	10	★	C-4	D22	Rear door cord LH
R12	3	★	B-2		Front door switch RH
R13	10	★	B-2	D28	Rear door cord RH
R15	11	★	B-3	R57	Fuel cord
R41	4	★	C-3		Seat heater LH
R42	6	★	C-3		Seat heater switch LH
R44	4	★	B-2		Seat heater RH
R45	6	Brown	C-2		Seat heater switch RH
R47	3	★	A-4		Fuel tank pressure sensor
R50	16	★	B-2	i157	Instrument panel wiring harness
R51	2	★	A-2		Vanity mirror light RH
R52	3	★	A-3		Room light
R54	2	★	B-3		Vanity mirror light LH
R55	4	★	A-3	R74	Sunroof cord
R57	11	★	B-3	R15	Rear wiring harness
R58	6	★	B-4		Fuel pump ASSY
R59	2	★	B-4		Fuel sub level sensor
R68	2	Dark gray	B-4		Pressure control solenoid valve (turbo model)
R74	4	★	A-3	R55	Roof cord
R75	20	★	B-3		Sunroof motor assembly
R98	14	★	B-1	i53	Instrument panel wiring harness
R99	13	★	C-3	i54	
R108	2	★	C-3		Seat belt switch LH
R109	2	Black	B-2		Power seat RH
R128	5	★	A-3		Sunroof switch
R167	14	★	C-3	i102	Instrument panel wiring harness
R187	5	Black	A-3		Sunroof switch (tilt)
R211	12	★	C-4		TPMS CM
R316	10	★	B-2		Audio amplifier
R317	12	★	B-2		
R331	16	★	B-1	i153	Instrument panel wiring harness
R332	18	★	B-1	i154	
R333	11	★	B-1	i155	
R339	18	★	C-3	i2	Instrument panel wiring harness
R340	11	★	C-3	i190	
R341	12	★	B-3		Power seat LH
R342	14	Gray	B-3	R354	EPB adapter cord
R343	4	★	B-4		J/C
R344	4	★	B-4		
R353	10	★	B-3		Overhead console
R354	14	Gray	B-3	R342	Rear wiring harness
R355	22	★	B-3		EPB CM
R382	4	★	B-1	i195	Instrument panel wiring harness

Connector				Connecting to	
No.	Pole	Color	Area	No.	Description
R383	4	★	B-2	R384	Adapter cord (audio amplifier)
R384	4	★	B-2	R383	Rear wiring harness
R385	10	★	B-1		Instrument panel wiring harness
R386	24	★	B-1		Audio amplifier
R387	3	★	B-3		Rearview mirror
★: White or natural color					

Connector				Connecting to	
No.	Pole	Color	Area	No.	Description
AB17	15	Yellow	B-3		Airbag CM
AB18	15	Yellow	B-3		
AB19	4	Yellow	C-3		Side airbag module LH
AB21	2	Black	C-4		Pretensioner LH
AB23	4	Yellow	C-4		Side airbag sensor LH
AB24	4	Yellow	B-2		Side airbag module RH
AB26	2	Black	B-3		Pretensioner RH
AB28	4	Yellow	B-3		Side airbag sensor RH
AB53	3	Brown	C-2	AB59	Occupant sensor harness
AB59	3	Brown	C-2	AB53	Rear wiring harness
AB60	2	Yellow	C-2		Buckle switch
AB61	10	Black	C-2		Occupant detection control module

Rear Wiring Harness



2. OUTBACK MODEL

Connector				Connecting to	
No.	Pole	Color	Area	No.	Description
R9	3	★	C-4		Front door switch LH
R10	10	★	C-4	D22	Rear door cord LH
R12	3	★	B-2		Front door switch RH
R13	10	★	B-3	D28	Rear door cord RH
R15	11	★	B-3	R57	Fuel cord
R41	4	★	C-3		Seat heater LH
R42	6	★	C-3		Seat heater switch LH
R44	4	★	B-2		Seat heater RH
R45	6	Brown	C-2		Seat heater switch RH
R47	3	★	A-4		Fuel tank pressure sensor
R50	16	★	B-2	i157	Instrument panel wiring harness
R51	2	★	A-3		Vanity mirror light RH
R52	3	★	A-3		Room light
R54	2	★	B-3		Vanity mirror light LH
R55	4	★	A-3	R74	Sunroof cord
R57	11	★	B-3	R15	Rear wiring harness
R58	6	★	B-4		Fuel pump ASSY
R59	2	★	B-4		Fuel sub level sensor
R74	4	★	A-3	R55	Roof cord
R75	20	★	B-3		Sunroof motor assembly
R98	14	★	B-1	i53	Instrument panel wiring harness
R99	13	★	C-3	i54	
R108	2	★	C-3		Seat belt switch LH
R109	2	Black	B-2		Power seat RH
R128	5	★	B-3		Sunroof switch
R167	14	★	C-3	i102	Instrument panel wiring harness
R187	5	Black	B-3		Sunroof switch (tilt)
R211	12	★	C-4		TPMS CM
R316	10	★	B-2		Audio amplifier
R317	12	★	B-2		
R331	16	★	B-1	i153	Instrument panel wiring harness
R332	18	★	B-1	i154	
R333	11	★	B-1	i155	
R339	18	★	C-3	i2	Instrument panel wiring harness
R340	11	★	C-3	i190	
R341	12	★	C-3		Seat cord LH
R342	14	Gray	B-4	R354	EPB adapter cord
R343	4	★	B-4		J/C
R344	4	★	B-4		
R346	4	★	C-3	R348	Rear wiring harness
R348	4	★	C-3	R346	
R353	10	★	A-3		Overhead console
R354	14	Gray	B-3	R342	Rear wiring harness
R355	22	★	B-3		EPB CM
R382	4	★	B-1	i195	Instrument panel wiring harness
R383	4	★	B-2	R384	Adapter cord (audio amplifier)
R384	4	★	B-2	R383	Rear wiring harness

Connector				Connecting to	
No.	Pole	Color	Area	No.	Description
R385	10	★	B-1		Instrument panel wiring harness
R386	24	★	B-2		Audio amplifier
R387	3	★	A-4		Rearview mirror
★: White or natural color					

Connector				Connecting to	
No.	Pole	Color	Area	No.	Description
AB17	24	Yellow	B-3		Airbag CM
AB18	24	Yellow	B-3		
AB19	4	Yellow	C-3		Side airbag module LH
AB21	2	Black	C-4		Pretensioner LH
AB23	4	Yellow	C-4		Side airbag sensor LH
AB24	4	Yellow	B-2		Side airbag module RH
AB26	2	Black	B-3		Pretensioner RH
AB28	4	Yellow	B-3		Side airbag sensor RH
AB53	3	Brown	C-2	AB59	Occupant sensor harness
AB59	3	Brown	C-2	AB53	Rear wiring harness
AB60	2	Yellow	C-2		Buckle switch
AB61	10	Black	C-2		Occupant detection control module

Rear Wiring Harness

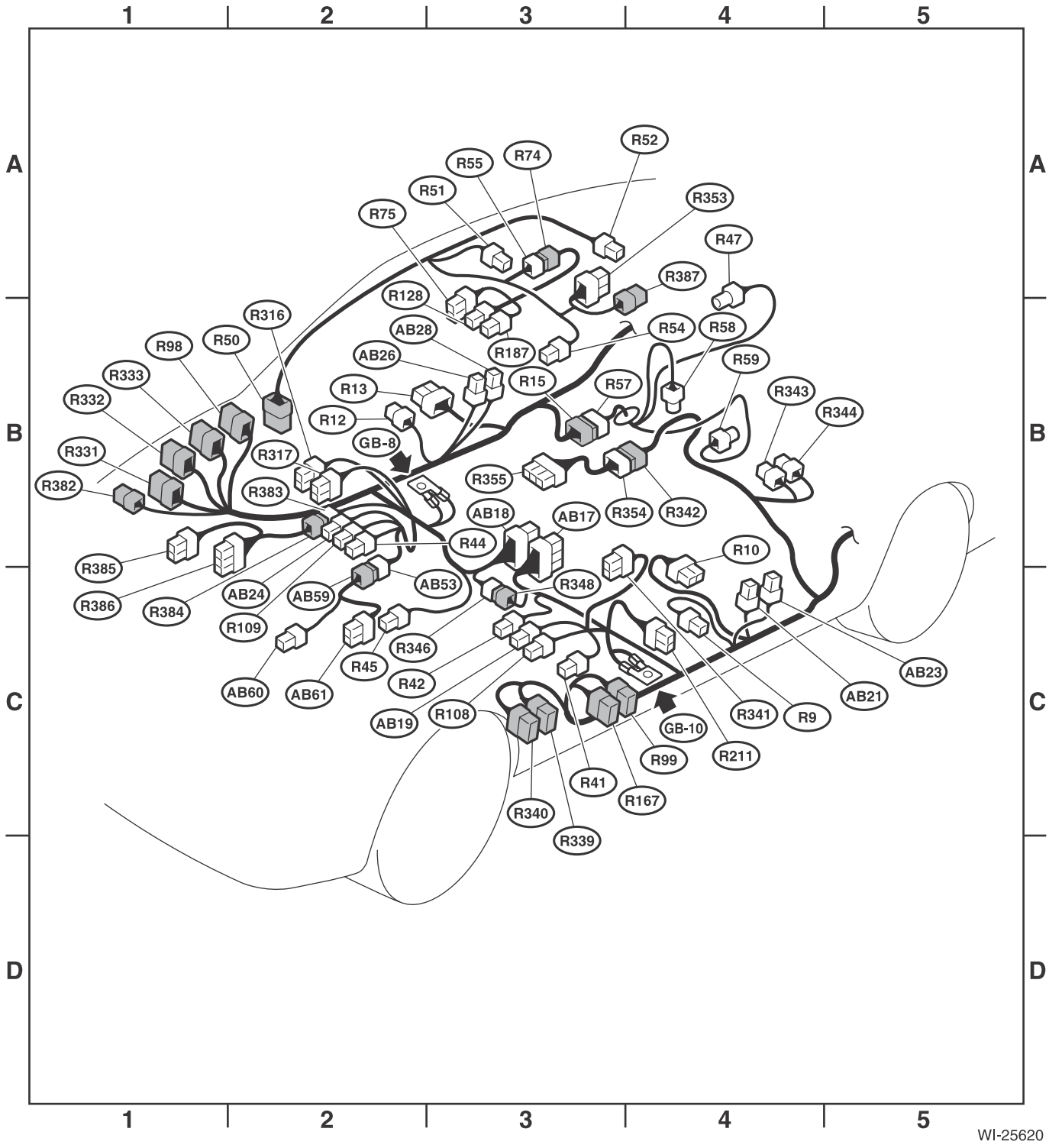

61.Door Cord

A: LOCATION

Connector				Connecting to	
No.	Pole	Color	Area	No.	Description
D2	2	★	C-2		Front door speaker RH
D3	6	Dark gray	B-2		Front power window motor RH
D5	6	★	C-3		Outer mirror assembly LH (except for C6 model)
	10	★	C-4		Outer mirror assembly LH (C6 model)
D7	3	★	C-3		Power window main switch
D10	2	★	C-4		Door step light LH
D12	2	★	C-4		Front door speaker LH
D13	6	Dark gray	C-4		Front power window motor LH
D15	6	★	B-2		Outer mirror assembly RH (except for C6 model)
	10	★	B-2		Outer mirror assembly RH (C6 model)
D17	8	★	B-2		Front power window sub switch
D18	2	★	C-4		Front door lock actuator LH
D20	2	★	B-3		Door step light RH
D22	10	★	C-4	R10	Rear wiring harness LH
D23	2	★	C-4		Rear door speaker LH
D24	6	Dark gray	B-4		Rear power window motor LH
D25	8	★	B-4		Rear power window sub switch LH
D26	2	★	B-5		Rear door lock actuator LH
D28	10	★	B-3	R13	Rear wiring harness RH
D29	2	★	B-3		Rear door speaker RH
D30	6	Dark gray	B-3		Rear power window motor RH
D31	8	★	B-3		Rear power window sub switch RH
D32	2	★	B-3		Rear door lock actuator RH
D72	2	★	B-3		Front door lock actuator RH
D83	28	★	B-2	i76	Instrument panel wiring harness
D84	28	★	C-3	i101	
D95	16	★	C-3		Power window main switch
D125	5	★	B-2		Passenger's door lock switch
D144	12	★	C-2	D146	Adapter cord (power window sub switch)
D145	20	★	C-3	D147	Adapter cord (power window main switch)
D146	12	★	C-2	D144	Front door cord RH
D147	20	★	C-3	D145	Front door cord LH
★: White or natural color					

Door Cord

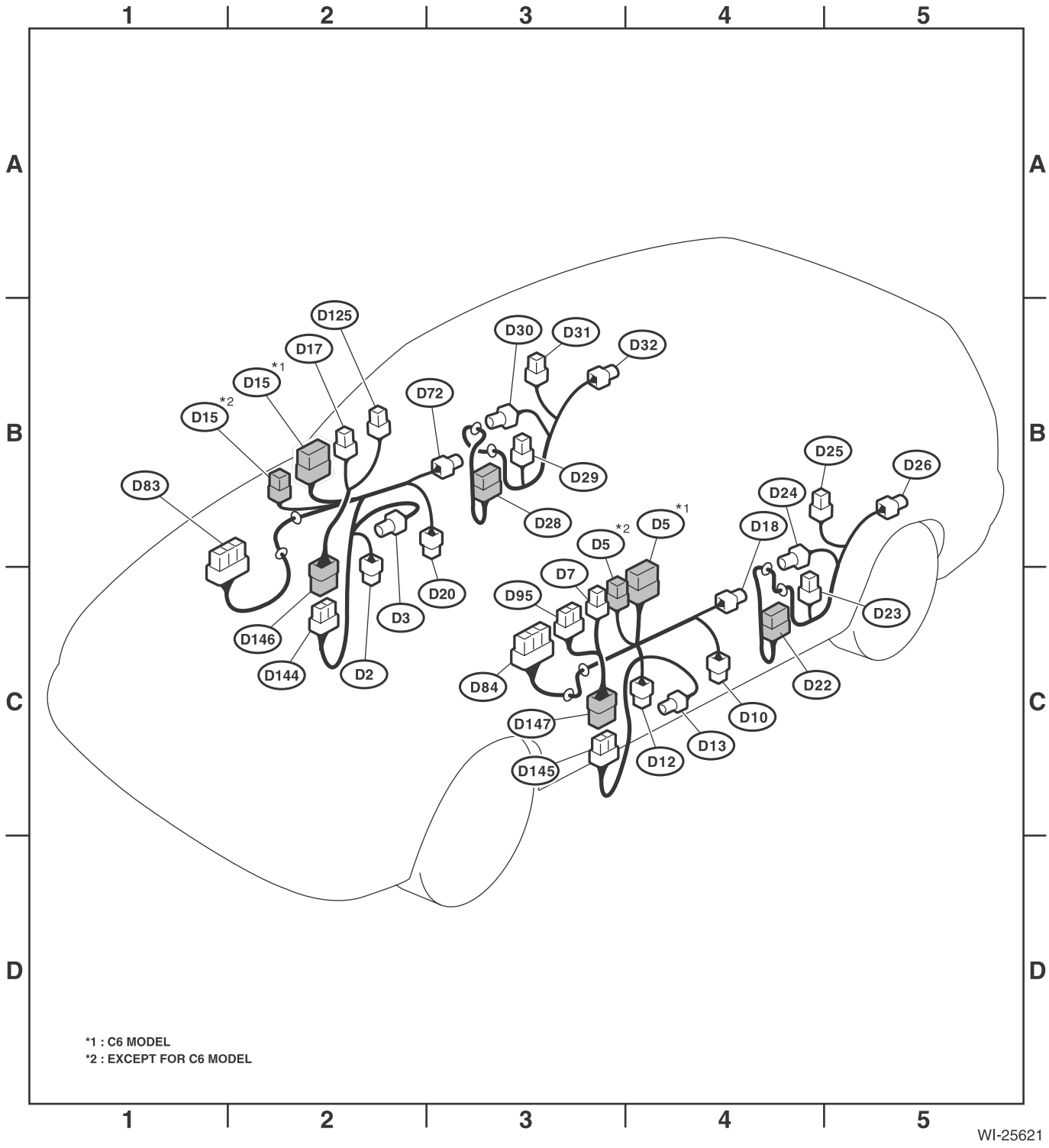
1
2
3
4
5
A
B
C
D
D125
D17
D15 *1
D15 *2
D72
D30
D31
D32
D29
D28
D83
D5 *1
D5 *2
D7
D95
D20
D3
D146
D144
D2
D84
D147
D145
D12
D13
D10
D22
D18
D24
D25
D26
D23
*1 : C6 MODEL
*2 : EXCEPT FOR C6 MODEL
WI-25621

62.Rear Wiring Harness and Trunk Lid Cord

A: LOCATION

Connector				Connecting to	
No.	Pole	Color	Area	No.	Description
R16	3	★	B-3		Rear door switch RH
R19	2	★	B-2		High-mounted stop light
R20	2	★	B-5		Trunk room light
R22	3	★	B-1		Rear door switch LH
R24	10	★	B-4	R60	Trunk lid cord
R26	6	★	B-5		Rear combination light RH
R28	6	★	C-3		Rear combination light LH
R60	10	★	B-5	R24	Rear wiring harness
R66	2	★	B-4		High-mounted stop light (with rear spoiler)
R72	2	Light gray	C-3		Rear ABS wheel speed sensor RH
R73	2	Light gray	C-2		Rear ABS wheel speed sensor LH
R76	2	★	C-4		License plate light LH
R77	2	★	C-4		License plate light RH
R97	2	★	B-2		Antenna amplifier
R117	4	★	B-4		Woofer
R122	10	★	B-5		Fuel pump CM
R144	2	Black	C-2		Drain valve
R174	2	★	B-4		Rear defogger
R186	3	★	C-4		Trunk lid lock actuator & switch
R330	4	★	C-4		Rearview camera
R336	4	★	B-4		J/C
R345	8	★	B-3		Keyless entry CM
R350	3	★	C-4		Rear finisher light LH (tail light)
R351	3	★	C-5		Rear finisher light LH (tail light)
★: White or natural color					

Connector				Connecting to	
No.	Pole	Color	Area	No.	Description
AB31	2	Black	B-2		Curtain airbag module LH
AB32	4	Yellow	C-1		Curtain airbag sensor LH
AB33	2	Black	B-4		Curtain airbag module RH
AB34	4	Yellow	B-3		Curtain airbag sensor RH

Rear Wiring Harness and Trunk Lid Cord

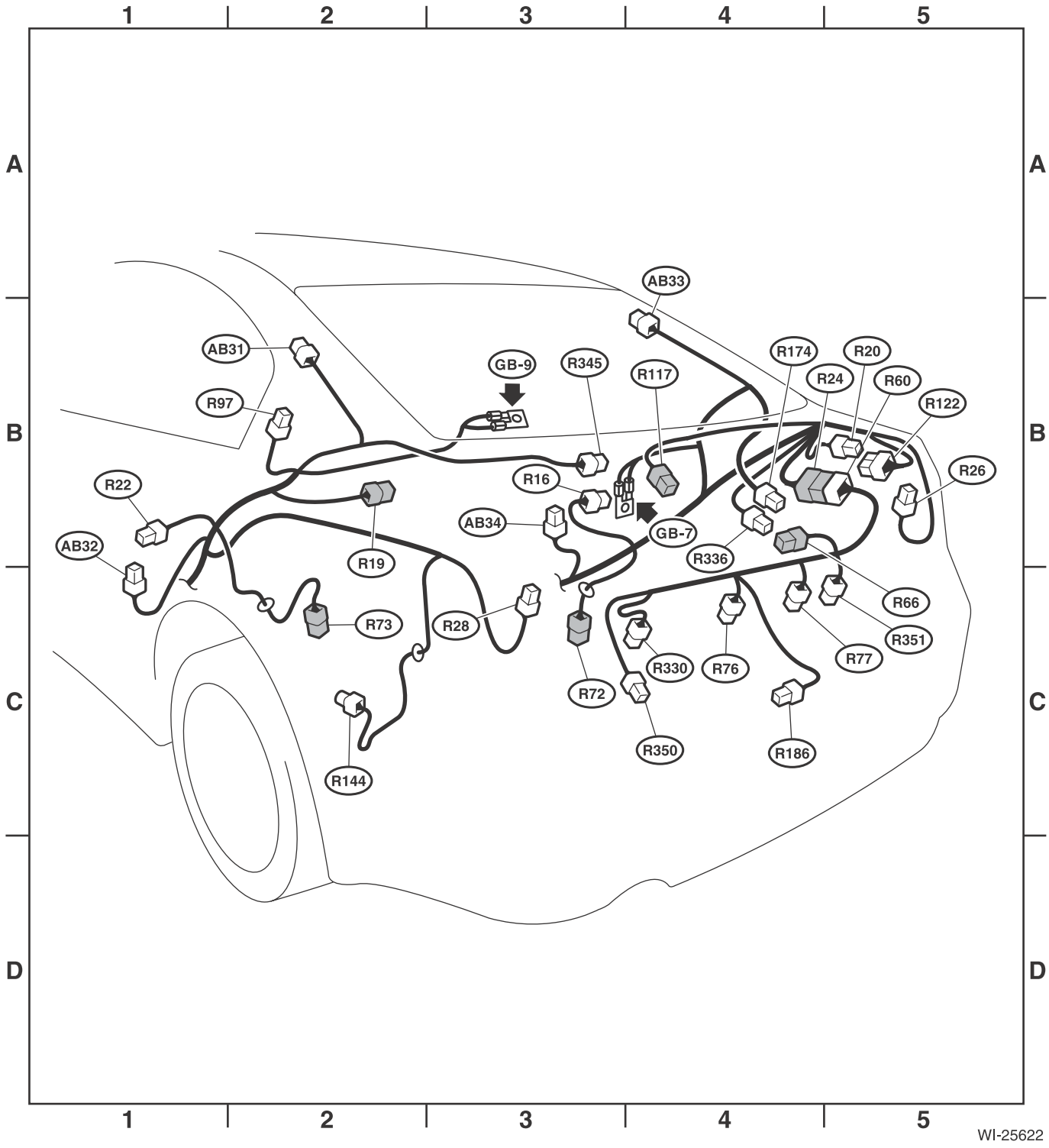

63.Rear Wiring Harness and Rear Gate Cord

A: LOCATION

Connector				Connecting to	
No.	Pole	Color	Area	No.	Description
R16	3	★	B-3		Rear door switch RH
R22	3	★	C-1		Rear door switch LH
R26	4	★	C-5		Rear combination light RH
R28	4	★	C-2		Rear combination light LH
R32	2	★	C-3		Rear accessory power supply socket (cargo room)
R38	13	★	B-3	D34	Rear gate cord
R72	2	Light gray	C-3		Rear ABS wheel speed sensor RH
R73	2	Light gray	C-2		Rear ABS wheel speed sensor LH
R79	8	★	C-2		Trailer connector
R97	1	★	B-2		Antenna amplifier
R117	4	★	C-4		Woofer
R122	10	★	C-4		Fuel pump CM
R144	2	Black	D-2		Drain valve
R330	4	★	B-2	R356	Rear gate cord (rearview camera)
R336	4	★	C-2		J/C
R345	8	★	C-2		Keyless entry CM
R347	3	★	B-3		Luggage room light
R356	4	★	B-2	R330	Rear wiring harness
R357	6	★	A-3		Rearview camera
★: White or natural color					

Connector				Connecting to	
No.	Pole	Color	Area	No.	Description
D34	13	★	B-3	R38	Rear wiring harness
D39	2	★	B-3		High-mounted stop light
D43	4	★	A-4		Rear wiper motor
D44	2	★	A-4		License plate light
D47	4	★	A-4		Rear gate lock actuator & latch switch
D77	6	★	A-4		Rear gate opener button
D87	2	★	A-5		Rear finisher light RH (back-up light)
D89	2	★	A-4		Rear defogger
D91	2	★	A-3		Rear finisher light LH (back-up light)
D134	2	★	A-3		Rear finisher light LH (tail light)
D139	2	★	B-5		Rear finisher light LH (tail light)
★: White or natural color					

Connector				Connecting to	
No.	Pole	Color	Area	No.	Description
AB31	2	Black	C-2		Curtain airbag module LH
AB32	4	Yellow	C-1		Curtain airbag sensor LH
AB33	2	Black	B-4		Curtain airbag module RH
AB34	4	Yellow	C-3		Curtain airbag sensor RH

Rear Wiring Harness and Rear Gate Cord

